azienda casa emilia - romagna
provincia di bologna

Piazza della Resistenza 4 - 40122
Bologna - BO
tel. 051.292111 fax 051.554335
Codice Fiscale - Partita IVA e Registro
Imprese di Bologna n. 00322270372
sito web: www.acerbologna.it
posta elettronica: info@acerbologna.it

INTERVENTO

FONDO COMPLEMENTARE AL PIANO NAZIONALE DI RIPRESA E RESILIENZA
PROGRAMMA "SICURO, VERDE E SOCIALE: RIQUALIFICAZIONE DELL'EDILIZIA RESIDENZIALE PUBBLICA"

PROGETTO DI MANUTENZIONE STRAORDINARIA PER IL RESTAURO E RISANAMENTO CONSERVATIVO DI DUE CASAMENTI A CORTE SITI IN COMUNE DI BOLOGNA LOCALITA' CIRENAICA. VIA BENTIVOGLI CIV. 31÷59 PER COMPLESSIVI 56 ALLOGGI DI ERP CON RELATIVE PERTINENZE E PARTI COMUNI

LOTTO **3053/PN_1**

PROGETTO ESECUTIVO

TAV.	OGGETTO	DATA
TAB_13	TABULATI DI CALCOLO CIVICO 53 STATO DI FATTO	Settembre 2022
SCALA		N. DISEGNO

VERSIONE	DESCRIZIONE	DATA	REDATTO	VERIFICATO		APPROVATO
00	PRIMA EMISSIONE	Settembre 2022	F. DALMONTE	N. LEONE		N. LEONE
01						
02						
03						

Il Progettista Architettonico
Arch. Francesca Tovoli
Ing. Nicola Leone
SIDEL Ingegneria Srl
Via Isonzo, 13
40055 Villanova di Castenaso (BO)

Il Progettista Strutturale
Ing. Nicola Leone
SIDEL Ingegneria Srl
Via Isonzo, 13
40055 Villanova di Castenaso (BO)

Il Progettista Impianti Elettrici
Ing. Nicola Leone
SIDEL Ingegneria Srl
Via Isonzo, 13
40055 Villanova di Castenaso (BO)

Il Progettista Impianti Meccanici
Ing. Nicola Leone
SIDEL Ingegneria Srl
Via Isonzo, 13
40055 Villanova di Castenaso (BO)

Il Coordinatore della Sicurezza in Fase Progettuale
Ing. Nicola Leone
SIDEL Ingegneria Srl
Via Isonzo, 13
40055 Villanova di Castenaso (BO)

Il Coordinatore per la progettazione
Ing. Nicola Leone
SIDEL Ingegneria Srl
Via Isonzo, 13
40055 Villanova di Castenaso (BO)

Collaboratori Progettisti:
Ing. Marco Venturini
Ing. Federica Dalmonte
Geom. Alessio Breviglieri
Arch. Domenico Conaci
Geom. Arianna Danieli
P. I. Andrea Gamberini
Ing. Cesare Orsini

Responsabile del Procedimento
Ing. Antonio Frighi
ACER Bologna
Piazza della Resistenza, 4
40122 Bologna

Il Dirigente Responsabile del Servizio Tecnico
Ing. Antonio Frighi
ACER Bologna
Piazza della Resistenza, 4
40122 Bologna

Il Direttore Generale
Avv. Francesco Nitti
ACER Bologna
Piazza della Resistenza, 4
40122 Bologna

Il Presidente
Marco Bertuzzi
ACER Bologna
Piazza della Resistenza, 4
40122 Bologna

SIDEL
INGEGNERIA

TABULATI DI CALCOLO
CIVICO 53
STATO DI FATTO

Sommario

1 Risultati numerici

1.1 Sollecitazioni

1.1.1 Sollecitazioni aste

1.1.1.1 Convenzioni di segno aste

Le abbreviazioni relative alle sollecitazioni sugli elementi aste sono da intendersi:

- F1 (N): sforzo normale nell'asta;
- F2: sforzo di taglio agente nella direzione dell'asse locale 2;
- F3: sforzo di taglio agente nella direzione dell'asse locale 3;
- M1 (Mt): momento attorno all'asse locale 1; equivale al momento torcente;
- M2: momento attorno all'asse locale 2;
- M3: momento attorno all'asse locale 3.

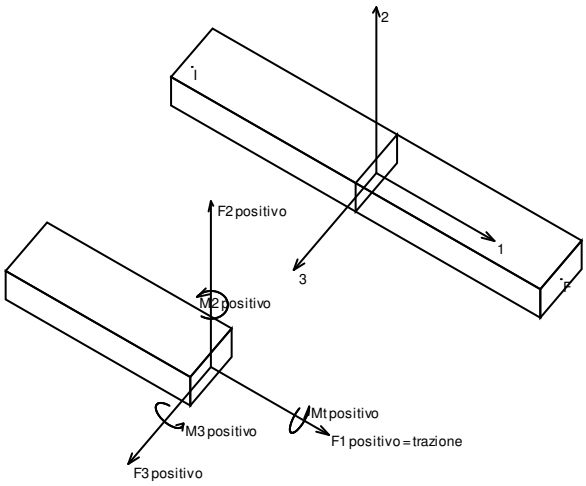

La convenzione sui segni per i parametri di sollecitazione delle aste è la seguente:
presa un'asta con nodo iniziale i e nodo finale f, asse 1 che va da i a f, assi 2 e 3 presi secondo quanto indicato nei paragrafi successivi relativi al sistema locale delle aste sezionando l'asta in un punto e considerando la sezione sinistra del punto in cui si è effettuato il taglio (sezione da cui esce il versore asse 1) i parametri di sollecitazione sono positivi se hanno verso e direzione concordi con il sistema di riferimento locale dell'asta 1, 2, 3 (per i momenti si adotta la regola della mano destra).

Il sistema è definito diversamente per tre categorie di aste, a seconda che siano originate da:

- aste verticali ad esempio pilastri e colonne;
- aste non verticali non di c.a., ad esempio travi di acciaio o legno;
- aste non verticali in c.a.: travi in c.a. di piano, falda o a quota generica.

Nel seguito si indica con 1, 2 e 3 il sistema locale dell'asta che non sempre coincide con gli assi principali della sezione. Si ricorda che per assi principali si intendono gli assi rispetto a cui si ha il raggio di inerzia minimo e massimo. Gli assi 1, 2 e 3 rispettano la regola della mano destra.

Sistema locale aste verticali

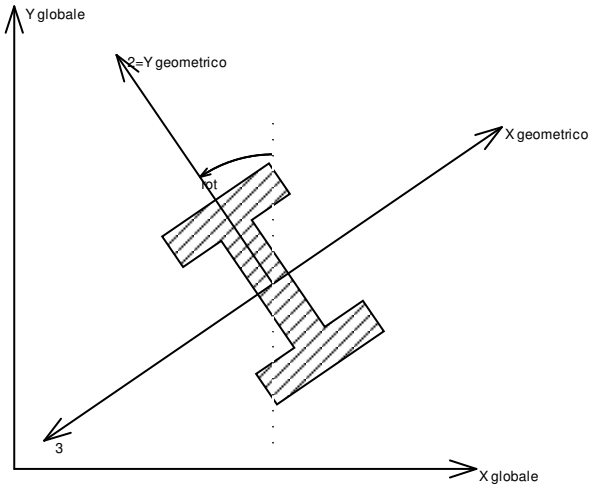

Nella figura si considera l'asse 1 uscente dal foglio (l'osservatore guarda in direzione opposta a quella dell'asse 1).

Sistema locale aste non verticali

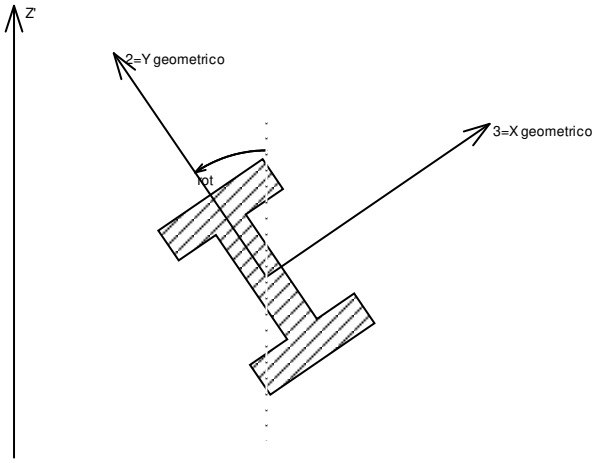

Nella figura si considera l'asse 1 entrante nel foglio (l'osservatore guarda in direzione coincidente a quella dell'asse 1).

L'asse Z' è illustrato nella figura seguente dove:

- P1 è il punto di inserimento iniziale dell'asta;
- P2 è il punto di inserimento finale dell'asta;
- N è la normale al piano o falda di inserimento;

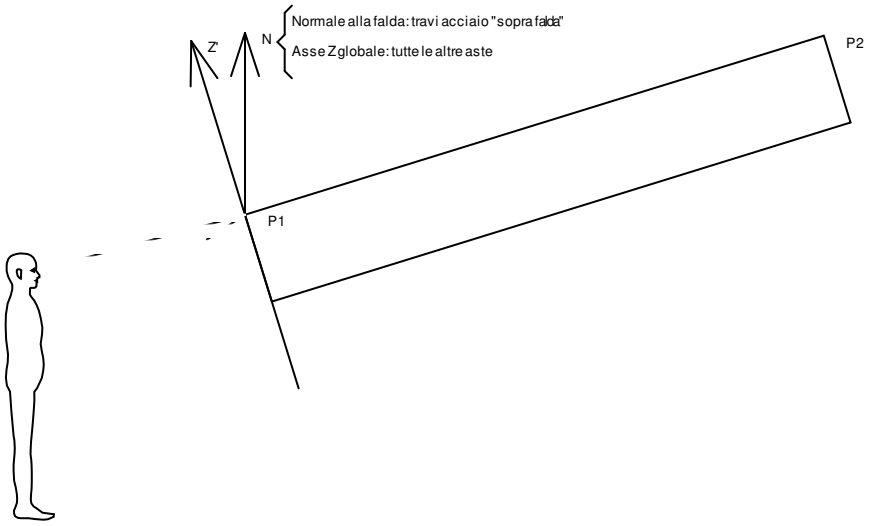

Z' è quindi l'intersezione tra il piano passante per P1, P2 contenente N e il piano della sezione iniziale dell'asta.

Sistema locale aste derivanti da travi in c.a.

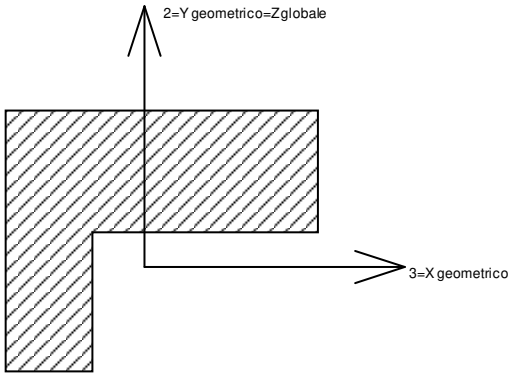

Nella figura si considera l'asse 1 entrante nel foglio (l'osservatore guarda in direzione coincidente a quella dell'asse 1). L'asse 2 è sempre verticale e quindi coincidente con l'asse Z globale nonché con l'asse y geometrico. L'asse 3 coincide con l'asse x geometrico. . Si sottolinea il fatto che gli assi 2 e 3 non corrispondono agli assi principali della sezione.

1.1.1.2 Sollecitazioni estreme aste

Asta: elemento asta a cui si riferiscono le sollecitazioni.
Ind.: indice dell'asta.
Cont.: contesto a cui si riferisce la sollecitazione
N.br.: nome breve della condizione o combinazione di carico.
Pos.: numero della sezione all'interno dell'asta (tra 1 e 31, dove 1 corrisponde alla sezione al nodo iniziale, 16 è la sezione in mezzeria, 31 corrisponde alla sezione al nodo finale).
Posizione: posizione a cui si riferisce la sollecitazione dell'asta.
X: componente X della posizione a cui si riferisce la sollecitazione dell'asta. [m]
Y: componente Y della posizione a cui si riferisce la sollecitazione dell'asta. [m]
Z: componente Z della posizione a cui si riferisce la sollecitazione dell'asta. [m]
Soll.traslazionale: componente traslazionale della sollecitazione dell'asta.
F1: componente F1 della sollecitazione dell'asta. [daN]
F2: componente F2 della sollecitazione dell'asta. [daN]
F3: componente F3 della sollecitazione dell'asta. [daN]
Soll.rotazionale: componente rotazionale della sollecitazione dell'asta.
*M1: componente M1 della sollecitazione dell'asta. [daN*m]*
*M2: componente M2 della sollecitazione dell'asta. [daN*m]*
*M3: componente M3 della sollecitazione dell'asta. [daN*m]*

Sollecitazioni con sforzo normale (N) minimo

Vengono mostrate le sole 5 aste più sollecitate.

Asta	Cont.	Pos.	Posizione			Soll.traslazionale			Soll.rotazionale		
Ind.	N.br.		X	Y	Z	F1	F2	F3	M1	M2	M3
113	SLV 9	1	-21.49	5.95	14.6	-8213	939	-49	4.68	435.68	257.56
114	SLV 9	1	-21.13	5.95	14.6	-8010	1301	-245	6.25	448.74	301.84
112	SLV 9	1	-21.85	5.95	14.6	-7865	547	47	2.77	391.12	210.77
111	SLV 9	1	-22.18	5.95	14.6	-7632	198	441	1.53	251.68	157.22
115	SLV 9	1	-20.77	5.95	14.6	-7435	1613	-470	7.2	463.09	319.34

Sollecitazioni con sforzo normale (N) massimo

Vengono mostrate le sole 5 aste più sollecitate.

Asta	Cont.	Pos.	Posizione			Soll.traslazionale			Soll.rotazionale		
Ind.	N.br.		X	Y	Z	F1	F2	F3	M1	M2	M3
118	SLV 13	1	-13.75	-3.36	14.6	8250	-1156	267	-2.81	-99.17	-837.07
113	SLV 7	1	-21.49	5.95	14.6	7983	-395	186	-1.6	-438.5	-86.76
112	SLV 7	1	-21.85	5.95	14.6	7729	-193	85	-0.74	-427.07	-53.47
146	SLV 9	1	-11	-3.36	14.6	7670	-817	429	0.08	-220.43	-214.7
114	SLV 7	1	-21.13	5.95	14.6	7603	-551	390	-2.19	-428.93	-114.27

Sollecitazioni con momento M2 minimo

Vengono mostrate le sole 5 aste più sollecitate.

Asta	Cont.	Pos.	Posizione			Soll.traslazionale			Soll.rotazionale		
Ind.	N.br.		X	Y	Z	F1	F2	F3	M1	M2	M3
265	SLV 15	31	-13.75	-4.78	13.92	2333	440	-3822	24.87	-3968.41	-100.7
260	SLV 13	31	-11.01	-4.78	13.92	-873	-166	-3689	20.36	-3823.65	33.5
235	SLV 15	1	-11	-4.78	13.92	4039	1442	2696	-8.86	-3492.74	694.85
241	SLV 3	31	-13.75	-4.78	13.92	3508	-1425	-2396	9.81	-3349.91	706.61
261	SLV 1	1	-13.76	-3.25	14.69	592	-1	4372	26.05	-2999.51	20.39

Sollecitazioni con momento M2 massimo

Vengono mostrate le sole 5 aste più sollecitate.

Asta	Cont.	Pos.	Posizione			Soll.traslazionale			Soll.rotazionale		
Ind.	N.br.		X	Y	Z	F1	F2	F3	M1	M2	M3
265	SLV 1	31	-13.75	-4.78	13.92	-2317	-338	4031	-23.67	4208.22	89.73
260	SLV 3	31	-11.01	-4.78	13.92	669	208	3688	-24.4	3794.14	-39.3
241	SLV 13	31	-13.75	-4.78	13.92	-2858	1446	2517	-9.28	3601.44	-679.34
235	SLV 1	1	-11	-4.78	13.92	-2355	-1576	-2572	8.47	3407.22	-738.95
261	SLV 15	1	-13.76	-3.25	14.69	-1893	863	-4203	-24.01	2893.48	275.52

Sollecitazioni con momento M3 minimo

Vengono mostrate le sole 5 aste più sollecitate.

Asta	Cont.	Pos.	Posizione			Soll.traslazionale			Soll.rotazionale		
Ind.	N.br.		X	Y	Z	F1	F2	F3	M1	M2	M3
184	SLU 71	1	-20.15	1.05	17.11	2011	-9804	-70	7.19	133.09	-5016.31
155	SLU 71	1	-20.15	1.05	17.11	-3894	-4311	26	-1.76	-177.8	-4332.76
156	SLU 71	1	-20.15	1.05	17.11	-3676	-4639	2	0.45	33.4	-4186.92
183	SLU 72	1	-5.27	6.54	14.68	-99	-2486	-135	4.75	407.93	-3828.84
223	SLU 79	31	-4.75	1.05	17.11	-2272	5799	38	5.41	24.58	-2929.36

Sollecitazioni con momento M3 massimo

Vengono mostrate le sole 5 aste più sollecitate.

Asta	Cont.	Pos.	Posizione			Soll.traslazionale			Soll.rotazionale		
Ind.	N.br.		X	Y	Z	F1	F2	F3	M1	M2	M3
183	SLU 72	19	-8.39	3.24	16.14	673	-88	-135	4.75	-233.67	3008.19
102	SLU 80	1	-5.16	6.66	14.6	-2418	4494	367	1.33	-96.92	2895.36
156	SLU 72	15	-22.2	3.26	16	-5387	83	4	0.45	36.18	2501.38
155	SLU 71	15	-22.21	-0.96	16	-5532	-68	26	-1.76	-97.73	1917.84
66	SLU 72	27	-5.2	6.66	14.6	-2604	-1	148	35.58	-1.22	1765.65

1.1.2 Sollecitazioni gusci

1.1.2.1 Convenzioni di segno gusci

Sono individuate distinte convenzioni di segno in relazione al tipo di elemento strutturale a cui il guscio si riferisce:

- convenzione per gusci non verticali, originati ad esempio da piastre e platee;
- convenzione per gusci verticali, originati ad esempio da pareti e muri.

Convenzione di segno per gusci non verticali

Il sistema di riferimento nel quale sono espressi i parametri di sollecitazione è così definito: origine appartenente al piano dell'elemento, asse x e y contenuti nel piano dell'elemento e terzo asse (z) ortogonale al piano dell'elemento a formare una terna destrogira. In particolare l'asse x ha proiezione in pianta parallela ed equiversa all'asse globale X. Nel caso di piastre orizzontali (caso più comune) gli assi x, y e z locali all'elemento sono paralleli ed equiversi agli assi X, Y e Z globali. Si sottolinea che non ha alcun interesse collocare esattamente nel piano dell'elemento la posizione dell'origine in quanto i parametri di sollecitazione sono invarianti rispetto a tale posizione.
In figura è mostrato un elemento infinitesimo di shell orizzontale con indicato il sistema di riferimento e i parametri di sollecitazione Mxx, Myy, Mxy.

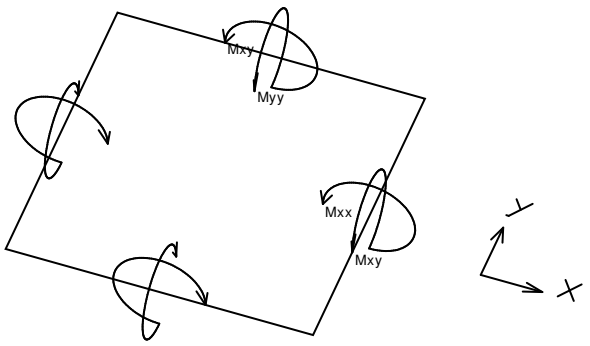

Si definiscono:

- Mxx: momento flettente [Forza*Lunghezza/Lunghezza] agente sul bordo di normale x (verso positivo indicato dalla freccia in figura che tende le fibre inferiori);
- Myy: momento flettente [Forza*Lunghezza/Lunghezza] agente sul bordo di normale y (verso positivo indicato dalla freccia in figura che tende le fibre inferiori);
- Mxy: momento torcente [Forza*Lunghezza/Lunghezza] agente sui bordi (verso positivo indicato dalla freccia in figura).

Per quanto riguarda le sollecitazioni estensionali si faccia riferimento alla figura seguente dove per lo stesso elemento infinitesimo di shell orizzontale con indicato il sistema di riferimento e i parametri di sollecitazione Fxx, Fyy, Fxy.

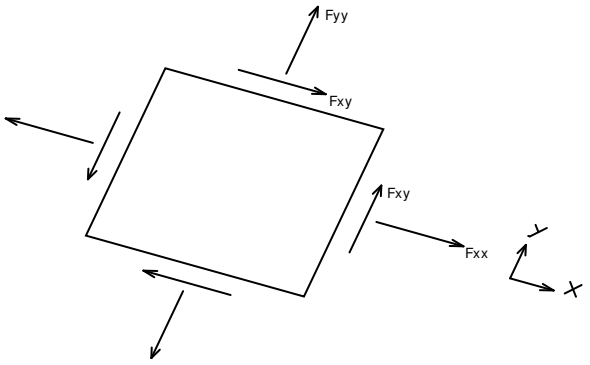

Si definiscono:

- Fxx: sforzo estensionale [Forza/Lunghezza] agente sul bordo di normale x (verso positivo indicato dalla freccia in figura che mette in trazione l'elemento);
- Fyy: sforzo estensionale [Forza/Lunghezza] agente sul bordo di normale all'asse y (verso positivo indicato dalla freccia in figura che mette in trazione l'elemento);
- Fxy: sforzo di taglio [Forza/Lunghezza] agente sui bordi (verso positivo indicato dalla freccia in figura).

Vengono riportati inoltre i tagli fuori dal piano dell'elemento guscio:

- Vx: taglio fuori piano [Forza/Lunghezza] applicato al bordo di normale parallela all'asse x;
- Vy: taglio fuori piano [Forza/Lunghezza] applicato al bordo di normale parallela all'asse y.

Convenzione di segno per gusci verticali

Il sistema di riferimento nel quale sono espressi i parametri di sollecitazione è così definito: origine appartenente al piano dell'elemento, asse O (ascisse) e z (ordinate) contenuti nel piano dell'elemento e terzo asse ortogonale al piano dell'elemento a formare una terna destrogira. In particolare l'asse O è orizzontale e l'asse z parallelo ed equiverso con l'asse Z globale. Si sottolinea che non ha alcun interesse collocare esattamente nel piano dell'elemento la posizione dell'origine in quanto i parametri di sollecitazione sono invarianti rispetto a tale posizione.In figura è mostrato un elemento infinitesimo di shell orizzontale con indicato il sistema di riferimento e i parametri di sollecitazione Moo, Mzz, Moz.

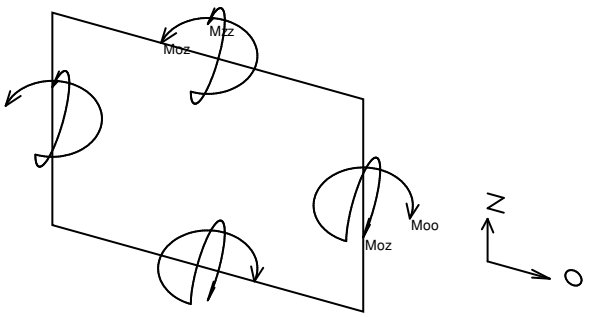

- Moo: momento flettente distribuito [Forza*Lunghezza/Lunghezza] applicato al bordo di normale parallela all'asse O (verso positivo indicato dalla freccia in figura che tende le fibre inferiori);
- Mzz: momento flettente distribuito [Forza*Lunghezza/Lunghezza] applicato al bordo di normale parallela all'asse z (verso positivo indicato dalla freccia in figura che tende le fibre inferiori);
- Moz: momento 'torcente' distribuito [Forza*Lunghezza/Lunghezza] applicato sui bordi (verso positivo indicato dalla freccia in figura).

Per quanto riguarda le sollecitazioni estensionali si faccia riferimento alla figura seguente dove per lo stesso elemento infinitesimo di shell con indicato il sistema di riferimento i parametri di sollecitazione Foo, Fzz, Foz sono rispettivamente:

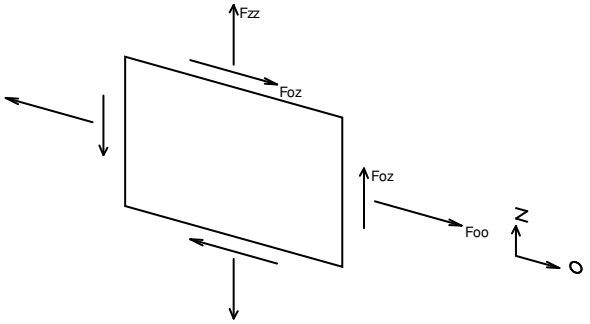

- Fzz: sforzo tensionale distribuito [Forza/Lunghezza] applicato al bordo di normale parallela all'asse z (verso positivo indicato dalla freccia in figura che mette in trazione l'elemento);
- Foo: sforzo tensionale distribuito [Forza/Lunghezza] applicato al bordo di normale parallela all'asse O (verso positivo indicato dalla freccia in figura che mette in trazione l'elemento);
- Foz: sforzo tagliante distribuito [Forza/Lunghezza] applicato sui bordi (verso positivo indicato dalla freccia in figura).

Vengono riportati inoltre i tagli fuori dal piano dell'elemento guscio:

- Vo: taglio fuori piano applicato al bordo di normale parallela all'asse O;
- Vz: taglio fuori piano applicato al bordo di normale parallela all'asse z.

1.1.2.2 Sollecitazioni estreme gusci

Shell: elemento guscio a cui si riferiscono le sollecitazioni.
Ind: indice del guscio.
Cont.: contesto a cui si riferiscono le sollecitazioni.
N.br.: nome breve della condizione o combinazione di carico.
Nodo: nodo su cui si basa il guscio a cui si riferisce la sollecitazione.
Ind: indice del nodo.
Sollecitazione: valori della sollecitazione.
*M11: componente M11 della sollecitazione del guscio nel nodo indicato. [daN*m/m]*
*M12: componente M12 della sollecitazione del guscio nel nodo indicato. [daN*m/m]*
*M22: componente M22 della sollecitazione del guscio nel nodo indicato. [daN*m/m]*
F11: componente F11 della sollecitazione del guscio nel nodo indicato. [daN/m]
F12: componente F12 della sollecitazione del guscio nel nodo indicato. [daN/m]
F22: componente F22 della sollecitazione del guscio nel nodo indicato. [daN/m]
V13: componente V13 della sollecitazione del guscio nel nodo indicato. [daN/m]
V23: componente V23 della sollecitazione del guscio nel nodo indicato. [daN/m]

Sollecitazioni con momento M11 minimo

Vengono mostrati i soli 5 gusci più sollecitati.

Shell	Cont.	Nodo	Sollecitazione							
Ind	N.br.	Ind	M11	M12	M22	F11	F12	F22	V13	V23
504	SLV 7	3273	-1961	108	-853	-30749	-23671	-46383	8616	1972
412	SLV 11	3286	-1849	-156	-547	-33848	29744	-74787	-8154	1563

Shell	Cont.	Nodo	Sollecitazione							
Ind	N.br.	Ind	M11	M12	M22	F11	F12	F22	V13	V23
494	SLV 11	3273	-1784	-120	-804	32938	17419	-43396	-6311	1704
416	SLV 7	3286	-1771	160	-531	-32862	-24099	-70404	6199	1376
511	SLV 7	3272	-1673	102	-1015	21934	-24205	-15101	8149	2401

Sollecitazioni con momento M11 massimo

Vengono mostrati i soli 5 gusci più sollecitati.

Shell	Cont.	Nodo	Sollecitazione							
Ind	N.br.	Ind	M11	M12	M22	F11	F12	F22	V13	V23
4907	SLV 11	2880	1386	-19	862	38306	-5461	-5406	-6795	-90
415	SLV 11	3292	1277	-34	-211	-27839	-8196	1166	-6544	927
408	SLV 11	3291	1228	-80	-454	-5699	9917	-11291	-6839	-1523
511	SLV 7	3271	1224	78	-555	-17902	-22315	-17212	8155	1071
518	SLV 7	3270	1210	52	-585	-4073	-23283	-14645	7480	1046

Sollecitazioni con momento M22 minimo

Vengono mostrati i soli 5 gusci più sollecitati.

Shell	Cont.	Nodo	Sollecitazione							
Ind	N.br.	Ind	M11	M12	M22	F11	F12	F22	V13	V23
18067	SLV 7	15163	-502	-471	-2066	1759	7069	-18623	-6754	-11611
18066	SLV 9	15916	-466	-533	-2057	1026	-4631	-8567	2966	8096
4770	SLV 11	2842	192	160	-1590	-54194	-54423	-32177	6337	5491
4447	SLV 9	2838	312	-166	-1569	38970	-37864	-4330	-6168	4287
4446	SLV 5	2838	-392	414	-1489	15947	6981	-18581	-1736	3568

Sollecitazioni con momento M22 massimo

Vengono mostrati i soli 5 gusci più sollecitati.

Shell	Cont.	Nodo	Sollecitazione							
Ind	N.br.	Ind	M11	M12	M22	F11	F12	F22	V13	V23
18067	SLV 9	15163	502	471	2068	-1612	-6888	11630	6757	11617
18066	SLV 7	15916	466	532	2057	-1225	4476	1215	-2963	-8095
18065	SLV 7	16267	289	250	1038	3445	3804	18886	-1783	-5278
18068	SLV 5	14498	-249	-15	1036	3406	-5374	31238	-450	4699
4446	SLV Y	2838	368	-283	960	-9010	-5531	15157	1321	-2315

Sollecitazioni con sforzo F11 minimo

Vengono mostrati i soli 5 gusci più sollecitati.

Shell	Cont.	Nodo	Sollecitazione							
Ind	N.br.	Ind	M11	M12	M22	F11	F12	F22	V13	V23
7560	SLV 5	3587	46	12	28	-164201	24574	-36590	-427	214
7561	SLV 9	2858	0	25	15	-97265	75777	-99123	385	-3
2938	SLU 71	18236	4	4	7	-78810	-64684	-138632	-23	-100
3475	SLV 7	3326	313	-82	342	-70780	-14945	-17994	-2145	1256
3464	SLV 11	3324	296	90	315	-67372	14390	-17239	1631	1035

Sollecitazioni con sforzo F11 massimo

Vengono mostrati i soli 5 gusci più sollecitati.

Shell	Cont.	Nodo	Sollecitazione							
Ind	N.br.	Ind	M11	M12	M22	F11	F12	F22	V13	V23
7561	SLV 9	3650	-5	20	17	125769	-18946	32127	-653	-96
7560	SLV Y	3587	-33	-16	-18	107332	-19001	19456	298	-139
4862	SLV 5	2853	-119	-22	37	75656	43372	42902	-734	-197
4770	SLV 5	2842	-275	-133	728	74294	65585	60239	-3666	-2693
18782	SLV 3	8075	-20	-14	-1	58839	-2407	7601	3102	2410

Sollecitazioni con sforzo F22 minimo

Vengono mostrati i soli 5 gusci più sollecitati.

Shell	Cont.	Nodo	Sollecitazione							
Ind	N.br.	Ind	M11	M12	M22	F11	F12	F22	V13	V23
17055	SLV 9	14501	-96	-74	90	-33945	-4062	-340301	1362	-306
17052	SLV 7	16280	45	-53	-38	-6914	5728	-339733	-143	137
17054	SLV 9	15189	40	-98	137	-42308	18375	-285352	-1134	571
17053	SLV 7	15928	-27	83	85	-44027	-18036	-283320	-622	-356
4479	SLV 5	6189	-84	27	34	-28203	-3768	-236877	-138	193

Sollecitazioni con sforzo F22 massimo

Vengono mostrati i soli 5 gusci più sollecitati.

Shell	Cont.	Nodo	Sollecitazione							
Ind	N.br.	Ind	M11	M12	M22	F11	F12	F22	V13	V23
17052	SLV 9	16280	-45	53	36	5713	-5383	330218	145	-132
17055	SLV 7	14501	96	76	-90	34421	2586	328860	-1355	305
17054	SLV 7	15189	-40	98	-137	42262	-18048	274759	1131	-567
17053	SLV 9	15928	27	-83	-86	44249	17992	273549	618	356
4479	SLV 11	5799	-21	-11	-6	2850	-18868	217741	-134	-167

1.1.2.3 Sollecitazioni estreme gusci non verticali

Shell: *elemento guscio a cui si riferiscono le sollecitazioni.*
Ind: *indice del guscio.*
Cont.: *contesto a cui si riferiscono le sollecitazioni.*
N.br.: *nome breve della condizione o combinazione di carico.*
Nodo: *nodo su cui si basa il guscio a cui si riferisce la sollecitazione.*
Ind: *indice del nodo.*
Sollecitazione: *valori della sollecitazione.*
Mxx: *componente Mxx della sollecitazione del guscio nel nodo indicato. [daN*m/m]*
Mxy: *componente Mxy della sollecitazione del guscio nel nodo indicato. [daN*m/m]*

*Myy: componente Myy della sollecitazione del guscio nel nodo indicato. [daN*m/m]*
Fxx: componente Fxx della sollecitazione del guscio nel nodo indicato. [daN/m]
Fxy: componente Fxy della sollecitazione del guscio nel nodo indicato. [daN/m]
Fyy: componente Fyy della sollecitazione del guscio nel nodo indicato. [daN/m]
Vx: componente Vo della sollecitazione del guscio nel nodo indicato. [daN/m]
Vy: componente Vz della sollecitazione del guscio nel nodo indicato. [daN/m]

Sollecitazioni con momento Mxx minimo

Vengono mostrati i soli 5 gusci più sollecitati.

Shell	Cont.	Nodo	Sollecitazione							
Ind	N.br.	Ind	Mxx	Mxy	Myy	Fxx	Fxy	Fyy	Vx	Vy
5675	SLV 9	3250	-930	99	45	4931	-1785	-4162	-1237	26
169	SLV 7	2956	-779	95	-166	775	-1521	-8688	1640	-294
65	SLV 11	2956	-693	11	-146	-3311	-2155	-7268	-1344	-74
5746	SLV 11	3251	-452	105	-110	2219	-232	-20771	760	215
2228	SLV 15	3013	-448	96	-210	-16587	-1053	-3340	-1786	996

Sollecitazioni con momento Mxx massimo

Vengono mostrati i soli 5 gusci più sollecitati.

Shell	Cont.	Nodo	Sollecitazione							
Ind	N.br.	Ind	Mxx	Mxy	Myy	Fxx	Fxy	Fyy	Vx	Vy
5675	SLV 7	3250	1009	-173	439	1111	84	-23298	2008	-1360
5925	SLV 7	3255	735	416	521	-26844	17565	-18108	2308	1176
169	SLV 9	2956	734	-145	172	8904	8199	-30136	-2470	667
65	SLV 5	2956	619	-143	146	11491	-969	-32764	1718	359
257	SLV 1	3040	607	-75	465	-16674	-13128	-14679	-2113	76

Sollecitazioni con momento Myy minimo

Vengono mostrati i soli 5 gusci più sollecitati.

Shell	Cont.	Nodo	Sollecitazione							
Ind	N.br.	Ind	Mxx	Mxy	Myy	Fxx	Fxy	Fyy	Vx	Vy
4590	SLV 13	2919	-131	15	-481	5389	-1345	-19826	99	-2209
4601	SLV 13	2919	-127	13	-480	5831	2533	-19105	3	-2119
4612	SLV 9	2918	-135	-11	-469	4443	4241	-18134	56	-1929
4579	SLV 13	2920	-179	72	-457	-8431	-6984	-23212	-670	-2427
4623	SLV 9	2917	-131	-5	-446	7049	4495	-17189	117	-1741

Sollecitazioni con momento Myy massimo

Vengono mostrati i soli 5 gusci più sollecitati.

Shell	Cont.	Nodo	Sollecitazione							
Ind	N.br.	Ind	Mxx	Mxy	Myy	Fxx	Fxy	Fyy	Vx	Vy
5925	SLV 7	3255	735	416	521	-26844	17565	-18108	2308	1176
5675	SLV 11	3250	779	-140	510	-512	2867	-31888	2635	-1647
257	SLV 1	3040	607	-75	465	-16674	-13128	-14679	-2113	76
264	SLV 3	3040	598	72	461	-16643	13516	-16075	-2090	-108
2593	SLV 5	17693	267	-47	368	-2861	1968	-2978	-1080	466

Sollecitazioni con sforzo Fxx minimo

Vengono mostrati i soli 5 gusci più sollecitati.

Shell	Cont.	Nodo	Sollecitazione							
Ind	N.br.	Ind	Mxx	Mxy	Myy	Fxx	Fxy	Fyy	Vx	Vy
5840	SLV 9	3113	308	143	171	-65896	-4213	-29398	-554	-291
5833	SLV 15	3113	-80	95	-205	-50386	-7218	-31700	325	-517
7887	SLV 15	3113	-13	10	-75	-43931	-8607	-27131	-27	181
3050	SLV 9	3633	37	-11	51	-39753	-13904	-4285	-183	-191
5384	SLV 11	2508	166	-146	248	-37568	-16767	-9365	-655	977

Sollecitazioni con sforzo Fxx massimo

Vengono mostrati i soli 5 gusci più sollecitati.

Shell	Cont.	Nodo	Sollecitazione							
Ind	N.br.	Ind	Mxx	Mxy	Myy	Fxx	Fxy	Fyy	Vx	Vy
2077	SLV 9	2955	337	-39	-86	37546	7134	-8736	-1516	-792
5840	SLV Y	3113	-202	-89	-88	31354	14493	13564	292	169
169	SLV 7	2745	-114	180	4	27016	-7312	-876	1864	903
4640	SLV 11	3380	73	-2	-94	26784	3900	1075	37	-82
4646	SLV 11	3388	76	-2	-48	25805	3108	-1930	-21	-256

Sollecitazioni con sforzo Fyy minimo

Vengono mostrati i soli 5 gusci più sollecitati.

Shell	Cont.	Nodo	Sollecitazione							
Ind	N.br.	Ind	Mxx	Mxy	Myy	Fxx	Fxy	Fyy	Vx	Vy
4579	SLV 13	3479	90	133	46	4970	1529	-79913	718	-84
5833	SLV 9	3113	-279	155	-209	-27304	-5696	-45008	-118	193
3049	SLV 9	2845	-29	16	-68	-8878	-15114	-42999	-223	-50
7887	SLV 9	3113	-42	54	-45	-23012	-9403	-38890	9	170
5	SLU 83	65	-3	0	-14	-7313	2840	-38685	40	-78

Sollecitazioni con sforzo Fyy massimo

Vengono mostrati i soli 5 gusci più sollecitati.

Shell	Cont.	Nodo	Sollecitazione							
Ind	N.br.	Ind	Mxx	Mxy	Myy	Fxx	Fxy	Fyy	Vx	Vy
4579	SLV Y	3479	81	-44	-24	-1860	3093	21012	-238	-106
7871	SLV Y	4926	7	-10	9	1801	-5616	18817	46	-57
2079	SLV 11	3552	-43	66	-14	6604	9320	18804	-455	60
3049	SLV Y	2845	17	-16	26	1687	6347	17847	142	-50

Shell	Cont.	Nodo	Sollecitazione							
Ind	N.br.	Ind	Mxx	Mxy	Myy	Fxx	Fxy	Fyy	Vx	Vy
5833	SLV Y	3113	240	-113	129	-6800	215	17312	184	-288

1.1.2.4 Sollecitazioni estreme gusci verticali

Shell: elemento guscio a cui si riferiscono le sollecitazioni.
Ind: indice del guscio.
Cont.: contesto a cui si riferiscono le sollecitazioni.
N.br.: nome breve della condizione o combinazione di carico.
Nodo: nodo su cui si basa il guscio a cui si riferisce la sollecitazione.
Ind: indice del nodo.
Sollecitazione: valori della sollecitazione.
*Moo: componente Moo della sollecitazione del guscio nel nodo indicato. [daN*m/m]*
*Moz: componente Moz della sollecitazione del guscio nel nodo indicato. [daN*m/m]*
*Mzz: componente Mzz della sollecitazione del guscio nel nodo indicato. [daN*m/m]*
Foo: componente Foo della sollecitazione del guscio nel nodo indicato. [daN/m]
Foz: componente Foz della sollecitazione del guscio nel nodo indicato. [daN/m]
Fzz: componente Fzz della sollecitazione del guscio nel nodo indicato. [daN/m]
Vo: componente Vo della sollecitazione del guscio nel nodo indicato. [daN/m]
Vz: componente Vz della sollecitazione del guscio nel nodo indicato. [daN/m]

Sollecitazioni con momento Moo minimo

Vengono mostrati i soli 5 gusci più sollecitati.

Shell	Cont.	Nodo	Sollecitazione							
Ind	N.br.	Ind	Moo	Moz	Mzz	Foo	Foz	Fzz	Vo	Vz
504	SLV 7	3273	-1961	108	-853	-30749	-23671	-46383	8616	1972
412	SLV 11	3286	-1849	-156	-547	-33848	29744	-74787	-8154	1563
494	SLV 11	3273	-1784	-120	-804	32938	17419	-43396	-6311	1704
416	SLV 7	3286	-1771	160	-531	-32862	-24099	-70404	6199	1376
511	SLV 7	3272	-1673	102	-1015	21934	-24205	-15101	8149	2401

Sollecitazioni con momento Moo massimo

Vengono mostrati i soli 5 gusci più sollecitati.

Shell	Cont.	Nodo	Sollecitazione							
Ind	N.br.	Ind	Moo	Moz	Mzz	Foo	Foz	Fzz	Vo	Vz
415	SLV 11	3292	1277	-34	-211	-27839	-8196	1166	-6544	927
4934	SLV 9	2887	1265	-136	-304	-5181	-69	-1664	1019	-166
408	SLV 11	3291	1228	-80	-454	-5699	9917	-11291	-6839	-1523
3809	SLV 5	3087	1224	141	-246	-2409	-3145	-11992	3612	-753
511	SLV 7	3271	1224	78	-555	-17902	-22315	-17212	8155	1071

Sollecitazioni con momento Mzz minimo

Vengono mostrati i soli 5 gusci più sollecitati.

Shell	Cont.	Nodo	Sollecitazione							
Ind	N.br.	Ind	Moo	Moz	Mzz	Foo	Foz	Fzz	Vo	Vz
18067	SLV 9	15163	-502	471	-2068	-1612	6888	11630	6757	-11617
18066	SLV 7	15916	-466	532	-2057	-1225	-4476	1215	-2963	8095
18065	SLV 7	16267	-289	250	-1038	3445	-3804	18886	-1783	5278
18068	SLV 5	14498	249	-15	-1036	3406	5374	31238	-450	-4699
4865	SLV 7	2841	196	-128	-1019	-17901	28543	-20245	-4437	3776

Sollecitazioni con momento Mzz massimo

Vengono mostrati i soli 5 gusci più sollecitati.

Shell	Cont.	Nodo	Sollecitazione							
Ind	N.br.	Ind	Moo	Moz	Mzz	Foo	Foz	Fzz	Vo	Vz
18067	SLV 7	15163	502	-471	2066	1759	-7069	-18623	-6754	11611
18066	SLV 9	15916	466	-533	2057	1026	4631	-8567	2966	-8096
4770	SLV 11	2842	-192	160	1590	-54194	54423	-32177	6337	-5491
4447	SLV 9	2838	-312	-166	1569	38970	37864	-4330	-6168	-4287
4446	SLV 5	2838	392	414	1489	15947	-6981	-18581	-1736	-3568

Sollecitazioni con sforzo Foo minimo

Vengono mostrati i soli 5 gusci più sollecitati.

Shell	Cont.	Nodo	Sollecitazione							
Ind	N.br.	Ind	Moo	Moz	Mzz	Foo	Foz	Fzz	Vo	Vz
7560	SLV 5	3587	46	12	28	-164201	24574	-36590	-427	214
7561	SLV 9	2858	0	25	15	-97265	75777	-99123	385	-3
2938	SLU 71	18236	-4	4	-7	-78810	64684	-138632	-23	100
3475	SLV 7	3326	313	-82	342	-70780	-14945	-17994	-2145	1256
3464	SLV 11	3324	296	90	315	-67372	14390	-17239	1631	1035

Sollecitazioni con sforzo Foo massimo

Vengono mostrati i soli 5 gusci più sollecitati.

Shell	Cont.	Nodo	Sollecitazione							
Ind	N.br.	Ind	Moo	Moz	Mzz	Foo	Foz	Fzz	Vo	Vz
7561	SLV 9	3650	-5	20	17	125769	-18946	32127	-653	-96
7560	SLV Y	3587	-33	-16	-18	107332	-19001	19456	298	-139
4862	SLV 5	2853	-119	-22	37	75656	43372	42902	-734	-197
4770	SLV 5	2842	275	-133	-728	74294	-65585	60239	-3666	2693
18782	SLV 3	8075	-20	-14	-1	58839	-2407	7601	3102	2410

Sollecitazioni con sforzo Fzz minimo

Vengono mostrati i soli 5 gusci più sollecitati.

Shell	Cont.	Nodo	Sollecitazione							
Ind	N.br.	Ind	Moo	Moz	Mzz	Foo	Foz	Fzz	Vo	Vz
17055	SLV 9	14501	96	-74	-90	-33945	4062	-340301	1362	306
17052	SLV 7	16280	-45	-53	38	-6914	-5728	-339733	-143	-137
17054	SLV 9	15189	-40	-98	-137	-42308	-18375	-285352	-1134	-571
17053	SLV 7	15928	27	83	-85	-44027	18036	-283320	-622	356
4479	SLV 5	6189	84	27	-34	-28203	3768	-236877	-138	-193

Sollecitazioni con sforzo Fzz massimo

Vengono mostrati i soli 5 gusci più sollecitati.

Shell	Cont.	Nodo	Sollecitazione							
Ind	N.br.	Ind	Moo	Moz	Mzz	Foo	Foz	Fzz	Vo	Vz
17052	SLV 9	16280	45	53	-36	5713	5383	330218	145	132
17055	SLV 7	14501	-96	76	90	34421	-2586	328860	-1355	-305
17054	SLV 7	15189	40	98	137	42262	18048	274759	1131	567
17053	SLV 9	15928	-27	-83	86	44249	-17992	273549	618	-356
4479	SLV 11	5799	21	-11	6	2850	18868	217741	-134	167

1.1.3 Sollecitazioni gusci armati

1.1.3.1 Convenzioni di segno gusci

Sono individuate distinte convenzioni di segno in relazione al tipo di elemento strutturale a cui il guscio si riferisce:

- convenzione per gusci non verticali, originati ad esempio da piastre e platee;
- convenzione per gusci verticali, originati ad esempio da pareti e muri.

Convenzione di segno per gusci non verticali

Il sistema di riferimento nel quale sono espressi i parametri di sollecitazione è così definito: origine appartenente al piano dell'elemento, asse x e y contenuti nel piano dell'elemento e terzo asse (z) ortogonale al piano dell'elemento a formare una terna destrogira. In particolare l'asse x ha proiezione in pianta parallela ed equiversa all'asse globale X. Nel caso di piastre orizzontali (caso più comune) gli assi x, y e z locali all'elemento sono paralleli ed equiversi agli assi X, Y e Z globali. Si sottolinea che non ha alcun interesse collocare esattamente nel piano dell'elemento la posizione dell'origine in quanto i parametri di sollecitazione sono invarianti rispetto a tale posizione.
In figura è mostrato un elemento infinitesimo di shell orizzontale con indicato il sistema di riferimento e i parametri di sollecitazione Mxx, Myy, Mxy.

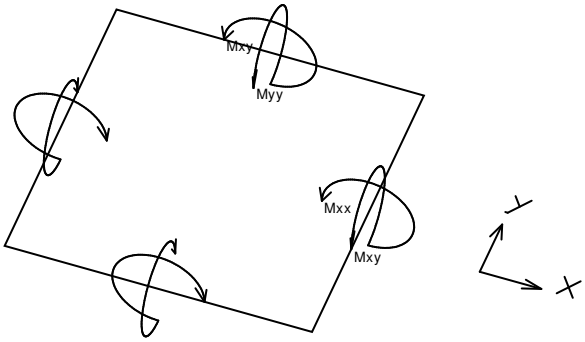

Si definiscono:

- Mxx: momento flettente [Forza*Lunghezza/Lunghezza] agente sul bordo di normale x (verso positivo indicato dalla freccia in figura che tende le fibre inferiori);
- Myy: momento flettente [Forza*Lunghezza/Lunghezza] agente sul bordo di normale y (verso positivo indicato dalla freccia in figura che tende le fibre inferiori);
- Mxy: momento torcente [Forza*Lunghezza/Lunghezza] agente sui bordi (verso positivo indicato dalla freccia in figura).

Per quanto riguarda le sollecitazioni estensionali si faccia riferimento alla figura seguente dove per lo stesso elemento infinitesimo di shell orizzontale con indicato il sistema di riferimento e i parametri di sollecitazione Fxx, Fyy, Fxy.

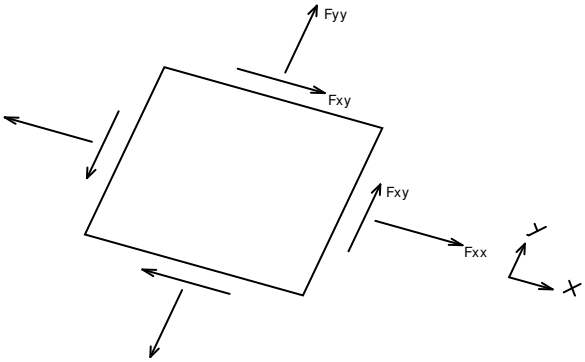

Si definiscono:

- Fxx: sforzo estensionale [Forza/Lunghezza] agente sul bordo di normale x (verso positivo indicato dalla freccia in figura che mette in trazione l'elemento);
- Fyy: sforzo estensionale [Forza/Lunghezza] agente sul bordo di normale all'asse y (verso positivo indicato dalla freccia in figura che mette in trazione l'elemento);
- Fxy: sforzo di taglio [Forza/Lunghezza] agente sui bordi (verso positivo indicato dalla freccia in figura).

Vengono riportati inoltre i tagli fuori dal piano dell'elemento guscio:

- Vx: taglio fuori piano [Forza/Lunghezza] applicato al bordo di normale parallela all'asse x;
- Vy: taglio fuori piano [Forza/Lunghezza] applicato al bordo di normale parallela all'asse y.

Convenzione di segno per gusci verticali

Il sistema di riferimento nel quale sono espressi i parametri di sollecitazione è così definito: origine appartenente al piano dell'elemento, asse O (ascisse) e z (ordinate) contenuti nel piano dell'elemento e terzo asse ortogonale al piano dell'elemento a formare una terna destrogira. In particolare l'asse O è orizzontale e l'asse z parallelo ed equiverso con l'asse Z globale. Si sottolinea che non ha alcun interesse collocare esattamente nel piano dell'elemento la posizione dell'origine in quanto i parametri di sollecitazione sono invarianti rispetto a tale posizione.In figura è mostrato un elemento infinitesimo di shell orizzontale con indicato il sistema di riferimento e i parametri di sollecitazione Moo, Mzz, Moz.

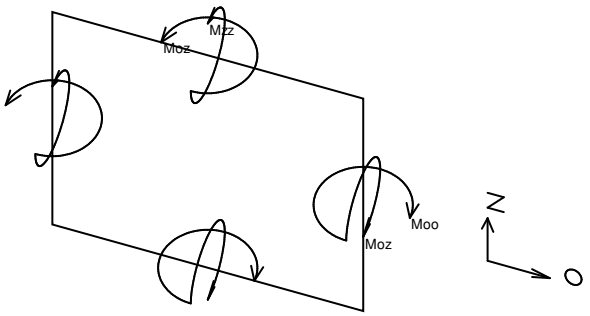

- Moo: momento flettente distribuito [Forza*Lunghezza/Lunghezza] applicato al bordo di normale parallela all'asse O (verso positivo indicato dalla freccia in figura che tende le fibre inferiori);
- Mzz: momento flettente distribuito [Forza*Lunghezza/Lunghezza] applicato al bordo di normale parallela all'asse z (verso positivo indicato dalla freccia in figura che tende le fibre inferiori);
- Moz: momento 'torcente' distribuito [Forza*Lunghezza/Lunghezza] applicato sui bordi (verso positivo indicato dalla freccia in figura).

Per quanto riguarda le sollecitazioni estensionali si faccia riferimento alla figura seguente dove per lo stesso elemento infinitesimo di shell con indicato il sistema di riferimento i parametri di sollecitazione Foo, Fzz, Foz sono rispettivamente:

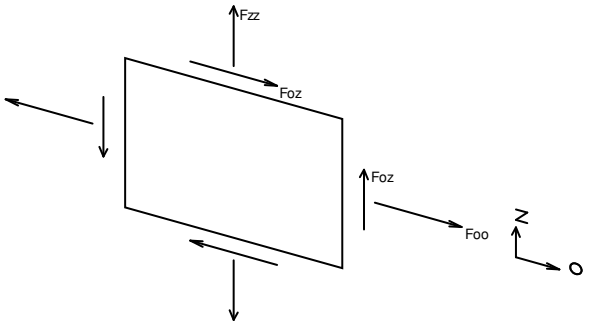

- Fzz: sforzo tensionale distribuito [Forza/Lunghezza] applicato al bordo di normale parallela all'asse z (verso positivo indicato dalla freccia in figura che mette in trazione l'elemento);
- Foo: sforzo tensionale distribuito [Forza/Lunghezza] applicato al bordo di normale parallela all'asse O (verso positivo indicato dalla freccia in figura che mette in trazione l'elemento);
- Foz: sforzo tagliante distribuito [Forza/Lunghezza] applicato sui bordi (verso positivo indicato dalla freccia in figura).

Vengono riportati inoltre i tagli fuori dal piano dell'elemento guscio:

- Vo: taglio fuori piano applicato al bordo di normale parallela all'asse O;
- Vz: taglio fuori piano applicato al bordo di normale parallela all'asse z.

1.1.4 Sollecitazioni gusci muratura

1.1.4.1 Convenzioni di segno gusci muratura

Sono individuate distinte convenzioni di segno in relazione al tipo di elemento strutturale a cui il guscio muratura si riferisce:

- convenzione per gusci non verticali, originati ad esempio da piastre e platee;

- convenzione per gusci verticali, originati ad esempio da pareti e muri.

Convenzione di segno per gusci non verticali

Il sistema di riferimento nel quale sono espressi i parametri di sollecitazione è così definito: origine appartenente al piano dell'elemento, asse x e y contenuti nel piano dell'elemento e terzo asse (z) ortogonale al piano dell'elemento a formare una terna destrogira. In particolare l'asse x ha proiezione in pianta parallela ed equiversa all'asse globale X. Nel caso di piastre orizzontali (caso più comune) gli assi x, y e z locali all'elemento sono paralleli ed equiversi agli assi X, Y e Z globali. Si sottolinea che non ha alcun interesse collocare esattamente nel piano dell'elemento la posizione dell'origine in quanto i parametri di sollecitazione sono invarianti rispetto a tale posizione.
In figura è mostrato un elemento infinitesimo di shell orizzontale con indicato il sistema di riferimento e i parametri di sollecitazione Mxx, Myy, Mxy.

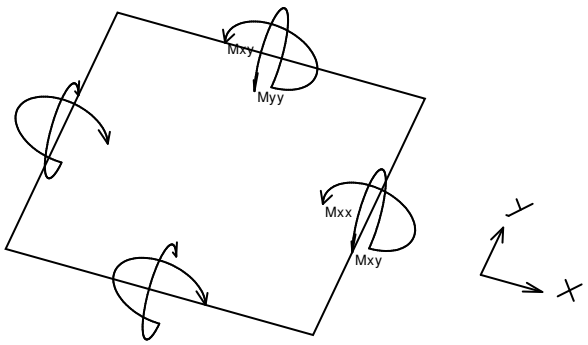

Si definiscono:

- Mxx: momento flettente [Forza*Lunghezza/Lunghezza] agente sul bordo di normale x (verso positivo indicato dalla freccia in figura che tende le fibre inferiori);
- Myy: momento flettente [Forza*Lunghezza/Lunghezza] agente sul bordo di normale y (verso positivo indicato dalla freccia in figura che tende le fibre inferiori);
- Mxy: momento torcente [Forza*Lunghezza/Lunghezza] agente sui bordi (verso positivo indicato dalla freccia in figura).

Per quanto riguarda le sollecitazioni estensionali si faccia riferimento alla figura seguente dove per lo stesso elemento infinitesimo di shell orizzontale con indicato il sistema di riferimento e i parametri di sollecitazione Fxx, Fyy, Fxy.

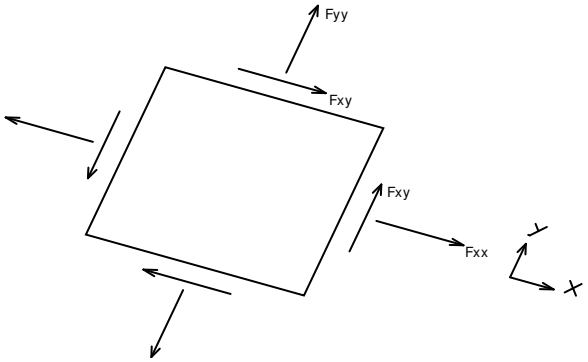

Si definiscono:

- Fxx: sforzo tensionale [Forza/Lunghezza] agente sul bordo di normale x (verso positivo indicato dalla freccia in figura che mette in trazione l'elemento);
- Fyy: sforzo tensionale [Forza/Lunghezza] agente sul bordo di normale all'asse y (verso positivo indicato dalla freccia in figura che mette in trazione l'elemento);
- Fxy: sforzo tagliante [Forza/Lunghezza] agente sui bordi (verso positivo indicato dalla freccia in figura).

Convenzione di segno per gusci verticali

Il sistema di riferimento nel quale sono espressi i parametri di sollecitazione è così definito: origine appartenente al piano dell'elemento, asse O (ascisse) e z (ordinate) contenuti nel piano dell'elemento e terzo asse ortogonale al piano dell'elemento a formare una terna destrogira. In particolare l'asse O è orizzontale e l'asse z parallelo ed equiverso con l'asse Z globale. Si sottolinea che non ha alcun interesse collocare esattamente nel piano dell'elemento la posizione dell'origine in quanto i parametri di sollecitazione sono invarianti rispetto a tale posizione.In figura è mostrato un elemento infinitesimo di shell orizzontale con indicato il sistema di riferimento e i parametri di sollecitazione Moo, Mzz, Moz.

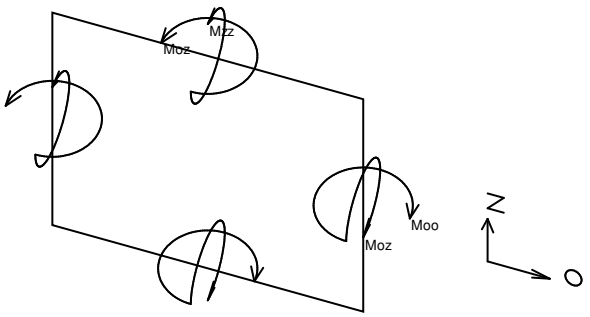

- Moo: momento flettente distribuito [Forza*Lunghezza/Lunghezza] applicato al bordo di normale parallela all'asse O (verso positivo indicato dalla freccia in figura che tende le fibre inferiori);
- Mzz: momento flettente distribuito [Forza*Lunghezza/Lunghezza] applicato al bordo di normale parallela all'asse z (verso positivo indicato dalla freccia in figura che tende le fibre inferiori);
- Moz: momento 'torcente' distribuito [Forza*Lunghezza/Lunghezza] applicato sui bordi (verso positivo indicato dalla freccia in figura).

Per quanto riguarda le sollecitazioni estensionali si faccia riferimento alla figura seguente dove per lo stesso elemento infinitesimo di shell con indicato il sistema di riferimento i parametri di sollecitazione Foo, Fzz, Foz sono rispettivamente:

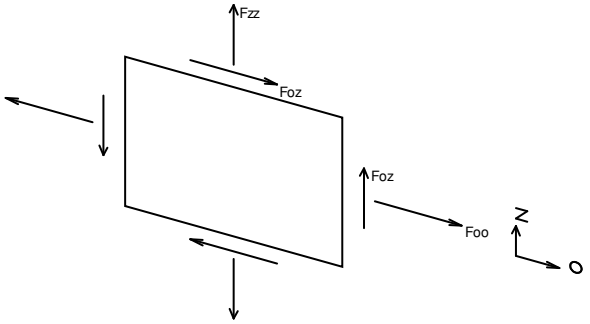

- Fzz: sforzo tensionale distribuito [Forza/Lunghezza] applicato al bordo di normale parallela all'asse z (verso positivo indicato dalla freccia in figura che mette in trazione l'elemento);
- Foo: sforzo tensionale distribuito [Forza/Lunghezza] applicato al bordo di normale parallela all'asse O (verso positivo indicato dalla freccia in figura che mette in trazione l'elemento);
- Foz: sforzo tagliante distribuito [Forza/Lunghezza] applicato sui bordi (verso positivo indicato dalla freccia in figura).

1.1.5 Sollecitazioni aste in muratura

1.1.5.1 Convenzioni di segno aste

Le abbreviazioni relative alle sollecitazioni sugli elementi aste sono da intendersi:

- F1 (N): sforzo normale nell'asta;
- F2: sforzo di taglio agente nella direzione dell'asse locale 2;
- F3: sforzo di taglio agente nella direzione dell'asse locale 3;
- M1 (Mt): momento attorno all'asse locale 1; equivale al momento torcente;
- M2: momento attorno all'asse locale 2;
- M3: momento attorno all'asse locale 3.

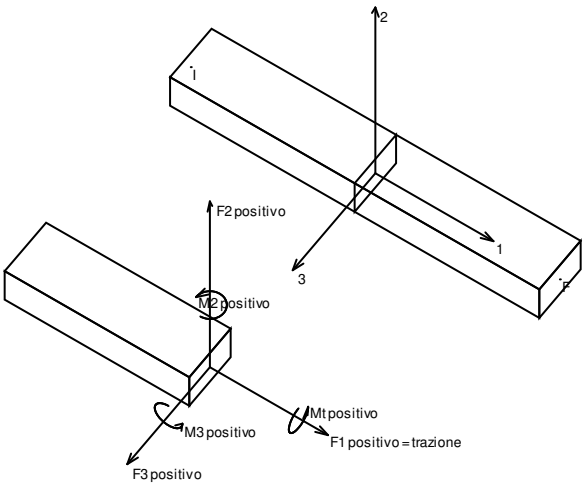

La convenzione sui segni per i parametri di sollecitazione delle aste è la seguente:
presa un'asta con nodo iniziale i e nodo finale f, asse 1 che va da i a f, assi 2 e 3 presi secondo quanto indicato nei paragrafi successivi relativi al sistema locale delle aste sezionando l'asta in un punto e considerando la sezione sinistra del punto in cui si è effettuato il taglio (sezione da cui esce il versore asse 1) i parametri di sollecitazione sono positivi se hanno verso e direzione concordi con il sistema di riferimento locale dell'asta 1, 2, 3 (per i momenti si adotta la regola della mano destra).

Il sistema è definito diversamente per tre categorie di aste, a seconda che siano originate da:

- aste verticali ad esempio pilastri e colonne;
- aste non verticali non di c.a., ad esempio travi di acciaio o legno;
- aste non verticali in c.a.: travi in c.a. di piano, falda o a quota generica.

Nel seguito si indica con 1, 2 e 3 il sistema locale dell'asta che non sempre coincide con gli assi principali della sezione. Si ricorda che per assi principali si intendono gli assi rispetto a cui si ha il raggio di inerzia minimo e massimo. Gli assi 1, 2 e 3 rispettano la regola della mano destra.

Sistema locale aste verticali

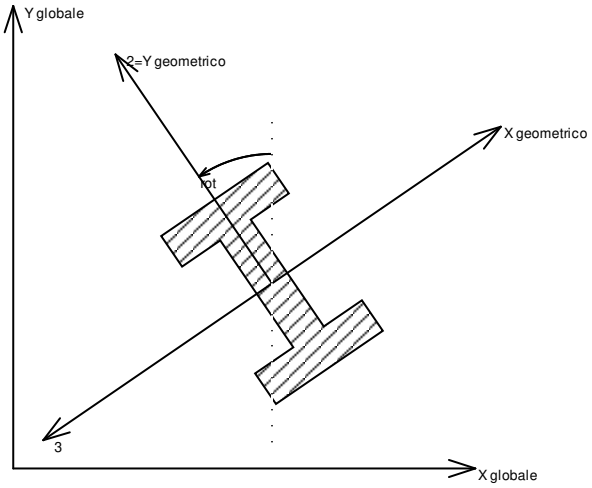

Nella figura si considera l'asse 1 uscente dal foglio (l'osservatore guarda in direzione opposta a quella dell'asse 1).

Sistema locale aste non verticali

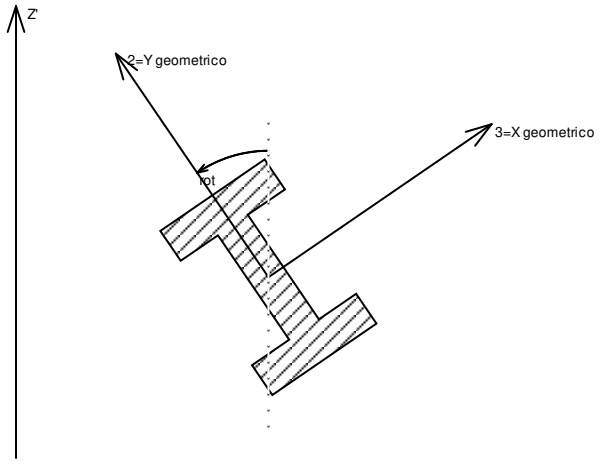

Nella figura si considera l'asse 1 entrante nel foglio (l'osservatore guarda in direzione coincidente a quella dell'asse 1).

L'asse Z' è illustrato nella figura seguente dove:

- P1 è il punto di inserimento iniziale dell'asta;
- P2 è il punto di inserimento finale dell'asta;
- N è la normale al piano o falda di inserimento;

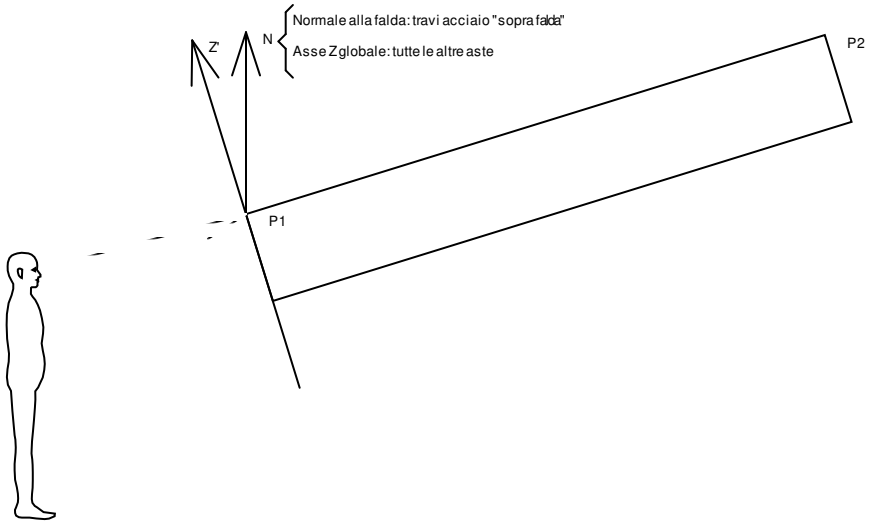

Z' è quindi l'intersezione tra il piano passante per P1, P2 contenente N e il piano della sezione iniziale dell'asta.

Sistema locale aste derivanti da travi in c.a.

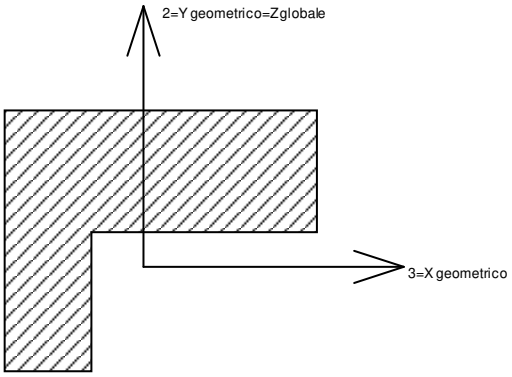

Nella figura si considera l'asse 1 entrante nel foglio (l'osservatore guarda in direzione coincidente a quella dell'asse 1). L'asse 2 è sempre verticale e quindi coincidente con l'asse Z globale nonché con l'asse y geometrico. L'asse 3 coincide con l'asse x geometrico. . Si sottolinea il fatto che gli assi 2 e 3 non corrispondono agli assi principali della sezione.

1.1.6 Sollecitazioni aste in muratura FRCM

1.1.6.1 Convenzioni di segno aste

Le abbreviazioni relative alle sollecitazioni sugli elementi aste sono da intendersi:

- F1 (N): sforzo normale nell'asta;
- F2: sforzo di taglio agente nella direzione dell'asse locale 2;
- F3: sforzo di taglio agente nella direzione dell'asse locale 3;
- M1 (Mt): momento attorno all'asse locale 1; equivale al momento torcente;
- M2: momento attorno all'asse locale 2;
- M3: momento attorno all'asse locale 3.

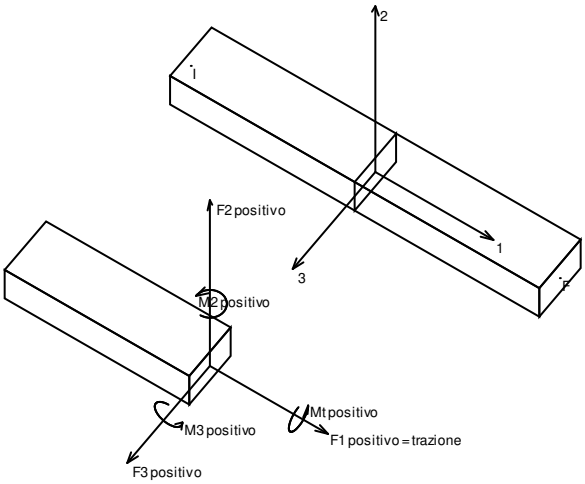

La convenzione sui segni per i parametri di sollecitazione delle aste è la seguente:
presa un'asta con nodo iniziale i e nodo finale f, asse 1 che va da i a f, assi 2 e 3 presi secondo quanto indicato nei paragrafi successivi relativi al sistema locale delle aste sezionando l'asta in un punto e considerando la sezione sinistra del punto in cui si è effettuato il taglio (sezione da cui esce il versore asse 1) i parametri di sollecitazione sono positivi se hanno verso e direzione concordi con il sistema di riferimento locale dell'asta 1, 2, 3 (per i momenti si adotta la regola della mano destra).

Il sistema è definito diversamente per tre categorie di aste, a seconda che siano originate da:

- aste verticali ad esempio pilastri e colonne;
- aste non verticali non di c.a., ad esempio travi di acciaio o legno;
- aste non verticali in c.a.: travi in c.a. di piano, falda o a quota generica.

Nel seguito si indica con 1, 2 e 3 il sistema locale dell'asta che non sempre coincide con gli assi principali della sezione. Si ricorda che per assi principali si intendono gli assi rispetto a cui si ha il raggio di inerzia minimo e massimo. Gli assi 1, 2 e 3 rispettano la regola della mano destra.

Sistema locale aste verticali

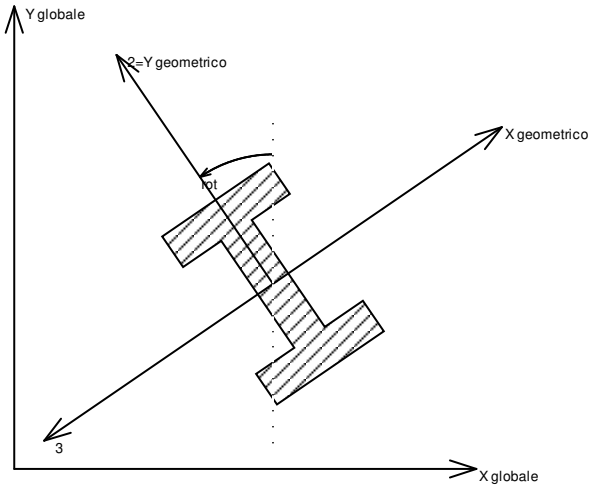

Nella figura si considera l'asse 1 uscente dal foglio (l'osservatore guarda in direzione opposta a quella dell'asse 1).

Sistema locale aste non verticali

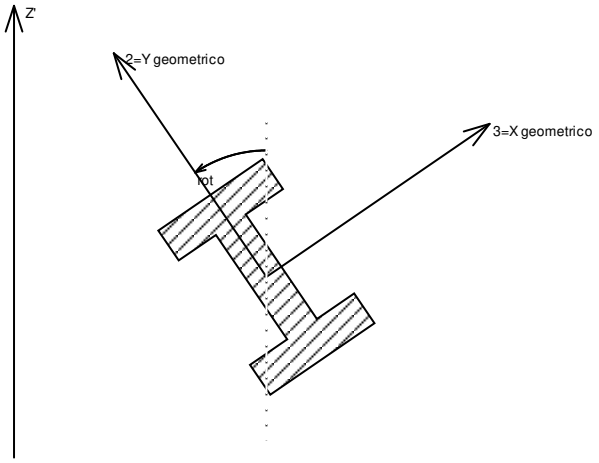

Nella figura si considera l'asse 1 entrante nel foglio (l'osservatore guarda in direzione coincidente a quella dell'asse 1).

L'asse Z' è illustrato nella figura seguente dove:

- P1 è il punto di inserimento iniziale dell'asta;
- P2 è il punto di inserimento finale dell'asta;
- N è la normale al piano o falda di inserimento;

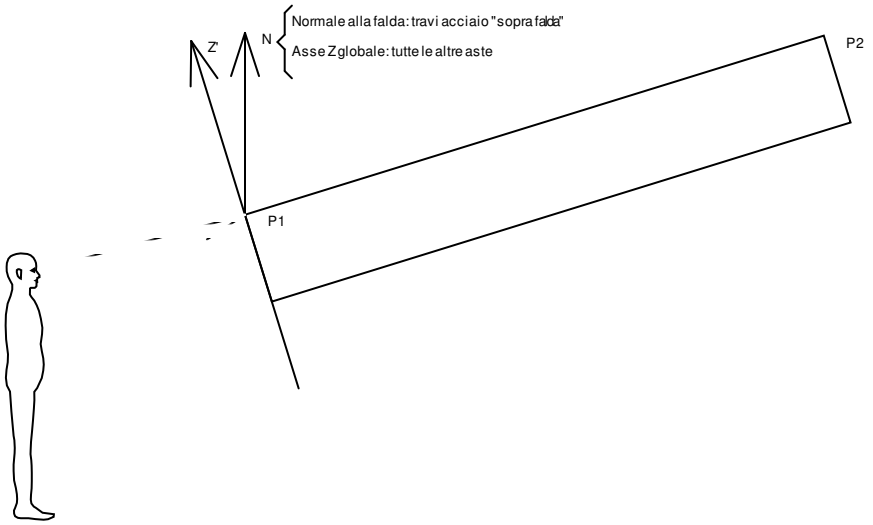

Z' è quindi l'intersezione tra il piano passante per P1, P2 contenente N e il piano della sezione iniziale dell'asta.

Sistema locale aste derivanti da travi in c.a.

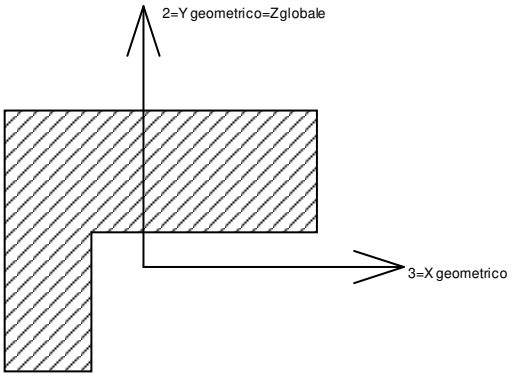

Nella figura si considera l'asse 1 entrante nel foglio (l'osservatore guarda in direzione coincidente a quella dell'asse 1). L'asse 2 è sempre verticale e quindi coincidente con l'asse Z globale nonché con l'asse y geometrico. L'asse 3 coincide con l'asse x geometrico. . Si sottolinea il fatto che gli assi 2 e 3 non corrispondono agli assi principali della sezione.

1.1.7 Sollecitazioni aste in muratura armata

1.1.7.1 Convenzioni di segno aste

Le abbreviazioni relative alle sollecitazioni sugli elementi aste sono da intendersi:

- F1 (N): sforzo normale nell'asta;
- F2: sforzo di taglio agente nella direzione dell'asse locale 2;
- F3: sforzo di taglio agente nella direzione dell'asse locale 3;
- M1 (Mt): momento attorno all'asse locale 1; equivale al momento torcente;
- M2: momento attorno all'asse locale 2;
- M3: momento attorno all'asse locale 3.

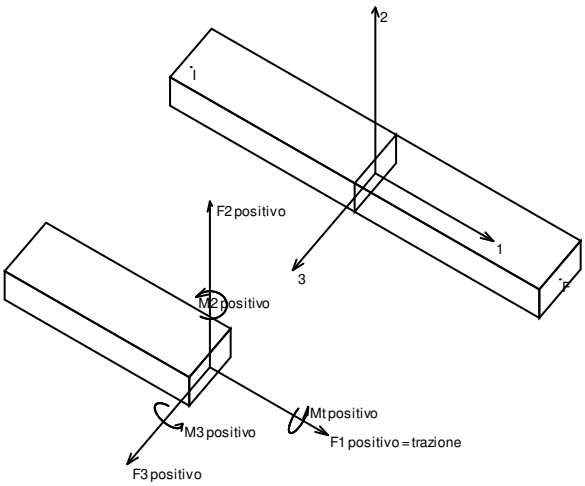

La convenzione sui segni per i parametri di sollecitazione delle aste è la seguente:
presa un'asta con nodo iniziale i e nodo finale f, asse 1 che va da i a f, assi 2 e 3 presi secondo quanto indicato nei paragrafi successivi relativi al sistema locale delle aste sezionando l'asta in un punto e considerando la sezione sinistra del punto in cui si è effettuato il taglio (sezione da cui esce il versore asse 1) i parametri di sollecitazione sono positivi se hanno verso e direzione concordi con il sistema di riferimento locale dell'asta 1, 2, 3 (per i momenti si adotta la regola della mano destra).

Il sistema è definito diversamente per tre categorie di aste, a seconda che siano originate da:

- aste verticali ad esempio pilastri e colonne;
- aste non verticali non di c.a., ad esempio travi di acciaio o legno;
- aste non verticali in c.a.: travi in c.a. di piano, falda o a quota generica.

Nel seguito si indica con 1, 2 e 3 il sistema locale dell'asta che non sempre coincide con gli assi principali della sezione. Si ricorda che per assi principali si intendono gli assi rispetto a cui si ha il raggio di inerzia minimo e massimo. Gli assi 1, 2 e 3 rispettano la regola della mano destra.

Sistema locale aste verticali

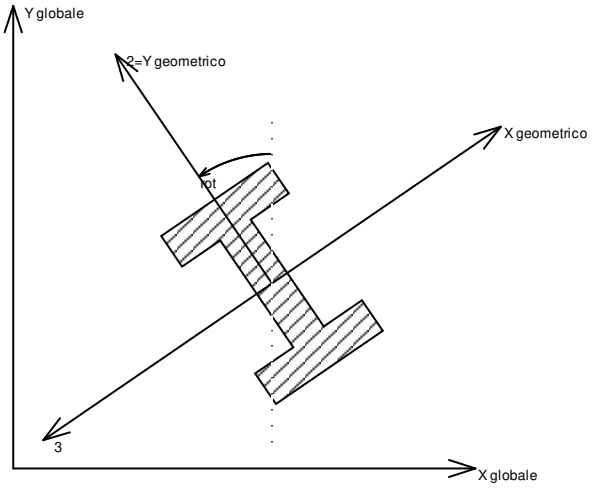

Nella figura si considera l'asse 1 uscente dal foglio (l'osservatore guarda in direzione opposta a quella dell'asse 1).

Sistema locale aste non verticali

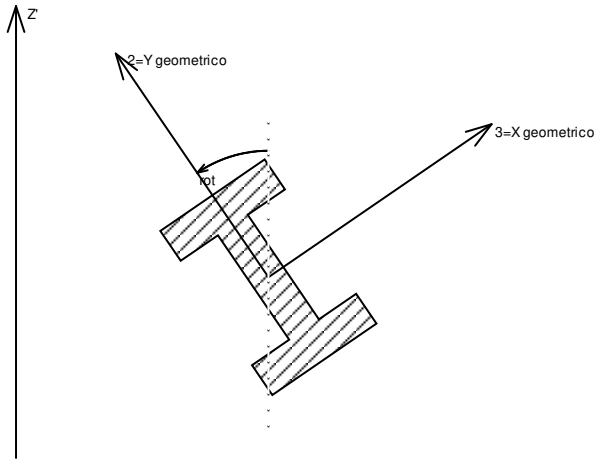

Nella figura si considera l'asse 1 entrante nel foglio (l'osservatore guarda in direzione coincidente a quella dell'asse 1).

L'asse Z' è illustrato nella figura seguente dove:

- P1 è il punto di inserimento iniziale dell'asta;
- P2 è il punto di inserimento finale dell'asta;
- N è la normale al piano o falda di inserimento;

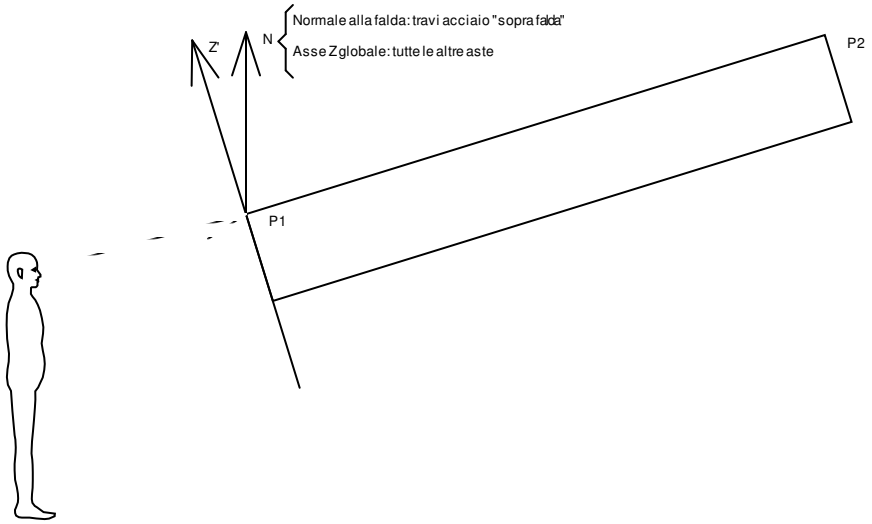

Z' è quindi l'intersezione tra il piano passante per P1, P2 contenente N e il piano della sezione iniziale dell'asta.

Sistema locale aste derivanti da travi in c.a.

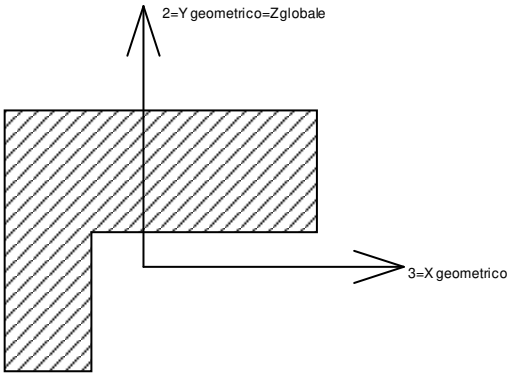

Nella figura si considera l'asse 1 entrante nel foglio (l'osservatore guarda in direzione coincidente a quella dell'asse 1). L'asse 2 è sempre verticale e quindi coincidente con l'asse Z globale nonché con l'asse y geometrico. L'asse 3 coincide con l'asse x geometrico. . Si sottolinea il fatto che gli assi 2 e 3 non corrispondono agli assi principali della sezione.

1.2 Reazioni nodali

1.2.1 Reazioni nodali estreme

Nodo: *Nodo sollecitato dalla reazione vincolare.*
Ind.: *indice del nodo.*
Cont.: *Contesto a cui si riferisce la reazione vincolare.*
N.br.: *nome breve della condizione o combinazione di carico.*
Reazione a traslazione: *reazione vincolare traslazionale del nodo.*
x: *componente X della reazione vincolare del nodo. [daN]*
y: *componente Y della reazione vincolare del nodo. [daN]*
z: *componente Z della reazione vincolare del nodo. [daN]*
Reazione a rotazione: *reazione vincolare rotazionale del nodo.*
x: *componente X della reazione a rotazione del nodo. [daN*m]*
y: *componente Y della reazione a rotazione del nodo. [daN*m]*
z: *componente Z della reazione a rotazione del nodo. [daN*m]*

Reazioni Fx minime

Vengono mostrati i soli 5 nodi più sollecitati.

Nodo	Cont.	Reazione a traslazione			Reazione a rotazione		
Ind.	N.br.	x	y	z	x	y	z
207	SLV 15	-5669	8	13210	7.11	-127.4	1.39
190	SLV 15	-5433	59	12678	3.22	-117.55	0.47
222	SLV 15	-5107	-3	9685	14.46	-202.58	0.06
224	SLV 15	-4906	480	19393	-13.13	-162.43	-0.62
221	SLV 15	-4813	-18	9260	25.52	-218.63	0.03

Reazioni Fx massime

Vengono mostrati i soli 5 nodi più sollecitati.

Nodo	Cont.	Reazione a traslazione			Reazione a rotazione		
Ind.	N.br.	x	y	z	x	y	z
167	SLV 3	5393	35	13125	-3.96	126.15	0.82
172	SLV 3	4538	-25	7806	29.06	203.66	-0.18
211	SLV 1	4487	-38	10261	10.02	100.07	-1.23
200	SLV 1	4314	33	9672	1.28	239.42	-0.26
201	SLV 1	4256	9	9048	0.45	212.53	0.05

Reazioni Fy minime

Vengono mostrati i soli 5 nodi più sollecitati.

Nodo	Cont.	Reazione a traslazione			Reazione a rotazione		
Ind.	N.br.	x	y	z	x	y	z
293	SLV 11	-57	-3167	10919	144.89	13.84	0.1
287	SLV 11	47	-3156	9455	135.88	25.31	-0.05
281	SLV 11	45	-3140	8701	134.84	29.37	-0.04
275	SLV 11	38	-3119	8223	132.49	29.1	-0.03
269	SLV 11	31	-3094	7913	131.06	26.74	-0.02

Reazioni Fy massime

Vengono mostrati i soli 5 nodi più sollecitati.

Nodo	Cont.	Reazione a traslazione			Reazione a rotazione		
Ind.	N.br.	x	y	z	x	y	z
30	SLV 5	5	3880	6622	-196.95	2.45	-0.02
95	SLV 5	-27	3415	12042	-150.19	-9.52	0.06
38	SLV 5	19	3373	7695	-160.33	4.55	0.06

Nodo	Cont.	Reazione a traslazione			Reazione a rotazione		
Ind.	N.br.	x	y	z	x	y	z
162	SLV 9	-47	3294	7736	-135.1	-20.26	0.05
34	SLV 5	11	3294	6943	-134.32	4.36	0.05

Reazioni Fz minime

Vengono mostrati i soli 5 nodi più sollecitati.

Nodo	Cont.	Reazione a traslazione			Reazione a rotazione		
Ind.	N.br.	x	y	z	x	y	z
198	SLV X	-3069	537	-7607	-20.3	-135.75	-3.66
42	SLV X	-2024	-766	-7393	22.19	-58.79	0.51
167	SLV X	-3133	22	-7289	-2.28	-76.51	0.44
168	SLV X	-1371	7	-6629	-6.07	-142.31	-0.76
18	SLV Y	143	-1389	-6558	58.25	7.19	0.04

Reazioni Fz massime

Vengono mostrati i soli 5 nodi più sollecitati.

Nodo	Cont.	Reazione a traslazione			Reazione a rotazione		
Ind.	N.br.	x	y	z	x	y	z
224	SLV 13	-4798	1651	20217	-63.66	-157.78	0.12
192	SLV 11	430	-2576	19145	98.25	-31.31	4.96
198	SLV 3	4125	-1884	18865	67.05	205.15	12.73
325	SLV 15	-2711	-1506	18372	89.85	-94.22	1.97
42	SLV 1	3665	2472	17370	-78.33	85.03	-1.11

1.2.2 Reazioni nodali in combinazioni di carico

Nodo: *Nodo sollecitato dalla reazione vincolare.*
Ind.: *indice del nodo.*
Cont.: *Contesto a cui si riferisce la reazione vincolare.*
N.br.: *nome breve della condizione o combinazione di carico.*
Reazione a traslazione: *reazione vincolare traslazionale del nodo.*
x: *componente X della reazione vincolare del nodo. [daN]*
y: *componente Y della reazione vincolare del nodo. [daN]*
z: *componente Z della reazione vincolare del nodo. [daN]*
Reazione a rotazione: *reazione vincolare rotazionale del nodo.*
x: *componente X della reazione a rotazione del nodo. [daN*m]*
y: *componente Y della reazione a rotazione del nodo. [daN*m]*
z: *componente Z della reazione a rotazione del nodo. [daN*m]*

Nodo	Cont.	Reazione a traslazione			Reazione a rotazione		
Ind.	N.br.	x	y	z	x	y	z
2	SLU 1	338	459	3130	-15.11	0.99	0.05
2	SLU 2	339	428	3057	-14.36	0.88	0.03
2	SLU 3	342	467	3168	-15.44	0.93	0.05
2	SLU 4	342	449	3124	-14.99	0.86	0.04
2	SLU 5	342	434	3094	-14.59	0.83	0.04
2	SLU 6	345	473	3205	-15.66	0.87	0.05
2	SLU 7	345	455	3161	-15.22	0.81	0.04
2	SLU 8	345	471	3204	-15.56	0.88	0.05
2	SLU 9	345	453	3160	-15.12	0.81	0.04
2	SLU 10	368	475	3304	-16.06	0.94	0.04
2	SLU 11	371	514	3414	-17.14	0.99	0.06
2	SLU 12	371	496	3371	-16.69	0.92	0.05
2	SLU 13	371	481	3341	-16.29	0.89	0.04
2	SLU 14	375	520	3451	-17.36	0.93	0.06
2	SLU 15	375	502	3408	-16.92	0.87	0.05
2	SLU 16	375	518	3450	-17.26	0.94	0.06
2	SLU 17	375	500	3407	-16.82	0.87	0.05
2	SLU 18	380	526	3482	-17.54	1.07	0.06
2	SLU 19	381	508	3438	-17.09	1.01	0.05
2	SLU 20	384	532	3519	-17.76	1.02	0.06
2	SLU 21	384	514	3475	-17.32	0.95	0.05
2	SLU 22	359	499	3325	-16.63	0.91	0.06
2	SLU 23	360	469	3253	-15.89	0.8	0.04
2	SLU 24	363	508	3363	-16.96	0.85	0.06
2	SLU 25	363	489	3320	-16.52	0.78	0.05
2	SLU 26	363	475	3290	-16.12	0.75	0.04
2	SLU 27	366	514	3400	-17.19	0.79	0.06
2	SLU 28	366	495	3357	-16.74	0.73	0.05
2	SLU 29	366	512	3399	-17.09	0.8	0.06
2	SLU 30	366	493	3356	-16.64	0.74	0.05
2	SLU 31	389	516	3499	-17.59	0.86	0.05
2	SLU 32	392	555	3610	-18.66	0.91	0.06
2	SLU 33	393	536	3566	-18.22	0.84	0.05
2	SLU 34	393	522	3536	-17.82	0.81	0.05
2	SLU 35	396	561	3647	-18.89	0.85	0.06
2	SLU 36	396	542	3603	-18.44	0.79	0.05
2	SLU 37	396	559	3646	-18.79	0.86	0.06
2	SLU 38	396	540	3602	-18.34	0.79	0.05
2	SLU 39	402	567	3677	-19.06	0.99	0.06
2	SLU 40	402	548	3634	-18.62	0.93	0.06
2	SLU 41	405	573	3714	-19.29	0.94	0.07
2	SLU 42	405	555	3671	-18.84	0.87	0.06
2	SLU 43	432	583	4001	-19.11	1.31	0.06
2	SLU 44	433	552	3929	-18.37	1.2	0.05
2	SLU 45	436	591	4040	-19.44	1.25	0.06
2	SLU 46	436	572	3996	-19	1.19	0.05

Nodo	Cont.	Reazione a traslazione			Reazione a rotazione		
Ind.	N.br.	x	y	z	x	y	z
2	SLU 47	436	558	3966	-18.6	1.15	0.05
2	SLU 48	439	597	4077	-19.67	1.2	0.06
2	SLU 49	440	578	4033	-19.23	1.13	0.06
2	SLU 50	439	595	4075	-19.57	1.2	0.06
2	SLU 51	439	576	4032	-19.12	1.14	0.06
2	SLU 52	462	599	4176	-20.07	1.26	0.05
2	SLU 53	465	638	4286	-21.15	1.31	0.07
2	SLU 54	466	620	4243	-20.7	1.25	0.06
2	SLU 55	466	605	4213	-20.3	1.21	0.05
2	SLU 56	469	644	4323	-21.37	1.26	0.07
2	SLU 57	469	626	4280	-20.93	1.19	0.06
2	SLU 58	469	642	4322	-21.27	1.26	0.07
2	SLU 59	469	624	4279	-20.83	1.2	0.06
2	SLU 60	475	650	4354	-21.54	1.4	0.07
2	SLU 61	475	632	4310	-21.1	1.33	0.06
2	SLU 62	478	656	4390	-21.77	1.34	0.07
2	SLU 63	478	638	4347	-21.33	1.28	0.06
2	SLU 64	454	623	4197	-20.64	1.23	0.07
2	SLU 65	454	592	4125	-19.9	1.12	0.05
2	SLU 66	457	631	4235	-20.97	1.17	0.07
2	SLU 67	457	613	4192	-20.52	1.11	0.06
2	SLU 68	457	599	4162	-20.12	1.07	0.05
2	SLU 69	460	637	4272	-21.2	1.12	0.07
2	SLU 70	461	619	4229	-20.75	1.05	0.06
2	SLU 71	460	635	4271	-21.1	1.12	0.07
2	SLU 72	461	617	4228	-20.65	1.06	0.06
2	SLU 73	483	640	4371	-21.6	1.18	0.06
2	SLU 74	487	679	4482	-22.67	1.23	0.08
2	SLU 75	487	660	4438	-22.23	1.17	0.07
2	SLU 76	487	646	4408	-21.83	1.13	0.06
2	SLU 77	490	685	4519	-22.9	1.18	0.08
2	SLU 78	490	666	4475	-22.45	1.11	0.07
2	SLU 79	490	683	4517	-22.8	1.18	0.08
2	SLU 80	490	664	4474	-22.35	1.12	0.07
2	SLU 81	496	691	4549	-23.07	1.32	0.08
2	SLU 82	496	672	4506	-22.62	1.25	0.07
2	SLU 83	499	697	4586	-23.3	1.26	0.08
2	SLU 84	499	678	4543	-22.85	1.2	0.07
2	SLE RA 1	344	471	3186	-15.54	0.96	0.05
2	SLE RA 2	345	450	3137	-15.05	0.89	0.04
2	SLE RA 3	347	476	3211	-15.76	0.92	0.05
2	SLE RA 4	347	464	3182	-15.46	0.88	0.05
2	SLE RA 5	347	454	3162	-15.2	0.86	0.04
2	SLE RA 6	349	480	3236	-15.91	0.89	0.05
2	SLE RA 7	349	468	3207	-15.62	0.85	0.05
2	SLE RA 8	349	479	3235	-15.85	0.89	0.05
2	SLE RA 9	349	466	3206	-15.55	0.85	0.05
2	SLE RA 10	364	481	3302	-16.18	0.93	0.05
2	SLE RA 11	366	507	3375	-16.9	0.96	0.06
2	SLE RA 12	366	495	3346	-16.6	0.92	0.05
2	SLE RA 13	366	486	3326	-16.33	0.9	0.05
2	SLE RA 14	369	511	3400	-17.05	0.93	0.06
2	SLE RA 15	369	499	3371	-16.75	0.88	0.05
2	SLE RA 16	368	510	3399	-16.98	0.93	0.06
2	SLE RA 17	369	498	3370	-16.68	0.89	0.05
2	SLE RA 18	372	515	3420	-17.16	1.02	0.06
2	SLE RA 19	372	503	3391	-16.86	0.98	0.05
2	SLE RA 20	375	520	3445	-17.31	0.98	0.06
2	SLE RA 21	375	507	3416	-17.02	0.94	0.05
2	SLE FR 1	344	471	3186	-15.54	0.96	0.05
2	SLE FR 2	344	466	3176	-15.44	0.95	0.05
2	SLE FR 3	345	472	3195	-15.6	0.95	0.05
2	SLE FR 4	353	480	3246	-15.93	0.97	0.05
2	SLE FR 5	354	486	3266	-16.09	0.97	0.05
2	SLE FR 6	358	493	3303	-16.35	0.99	0.05
2	SLE QP 1	344	471	3186	-15.54	0.96	0.05
2	SLE QP 2	353	484	3256	-16.03	0.98	0.05
2	SLD 1	611	648	4733	-21.28	9.2	0.02
2	SLD 2	611	648	4733	-21.28	9.2	0.02
2	SLD 3	537	428	3933	-13.18	7.36	-0.06
2	SLD 4	537	428	3933	-13.18	7.36	-0.06
2	SLD 5	541	868	4911	-29.89	6.24	0.16
2	SLD 6	541	868	4911	-29.89	6.24	0.16
2	SLD 7	297	132	2247	-2.88	0.1	-0.1
2	SLD 8	297	132	2247	-2.88	0.1	-0.1
2	SLD 9	408	836	4265	-29.17	1.86	0.2
2	SLD 10	408	836	4265	-29.17	1.86	0.2
2	SLD 11	164	100	1601	-2.16	-4.28	-0.05
2	SLD 12	164	100	1601	-2.16	-4.28	-0.05
2	SLD 13	168	540	2579	-18.88	-5.4	0.17
2	SLD 14	168	540	2579	-18.88	-5.4	0.17
2	SLD 15	95	320	1779	-10.78	-7.24	0.09
2	SLD 16	95	320	1779	-10.78	-7.24	0.09
2	SLV 1	945	874	6668	-28.55	19.82	-0.03
2	SLV 2	945	874	6668	-28.55	19.82	-0.03
2	SLV 3	774	352	4792	-9.47	15.39	-0.21
2	SLV 4	774	352	4792	-9.47	15.39	-0.21
2	SLV 5	790	1393	7124	-48.73	13.36	0.31
2	SLV 6	790	1393	7124	-48.73	13.36	0.31
2	SLV 7	220	-348	872	14.88	-1.42	-0.31
2	SLV 8	220	-348	872	14.88	-1.42	-0.31

Nodo	Cont.	Reazione a traslazione			Reazione a rotazione		
Ind.	N.br.	x	y	z	x	y	z
2	SLV 9	486	1316	5640	-46.94	3.38	0.41
2	SLV 10	486	1316	5640	-46.94	3.38	0.41
2	SLV 11	-84	-425	-613	16.67	-11.39	-0.2
2	SLV 12	-84	-425	-613	16.67	-11.39	-0.2
2	SLV 13	-68	616	1720	-22.59	-13.43	0.32
2	SLV 14	-68	616	1720	-22.59	-13.43	0.32
2	SLV 15	-239	94	-156	-3.5	-17.86	0.14
2	SLV 16	-239	94	-156	-3.5	-17.86	0.14
3	SLU 1	588	6	2144	-0.29	44.6	-0.01
3	SLU 2	609	5	2103	-0.42	45.81	-0.01
3	SLU 3	597	6	2167	-0.29	45.33	-0.01
3	SLU 4	609	5	2142	-0.37	46.06	-0.01
3	SLU 5	616	5	2127	-0.42	46.47	-0.01
3	SLU 6	605	6	2191	-0.29	46	-0.01
3	SLU 7	617	5	2166	-0.37	46.72	-0.01
3	SLU 8	604	6	2193	-0.29	45.92	-0.01
3	SLU 9	616	5	2168	-0.36	46.65	-0.01
3	SLU 10	677	6	2249	-0.44	50.73	-0.01
3	SLU 11	666	6	2313	-0.32	50.25	-0.01
3	SLU 12	678	6	2288	-0.39	50.98	-0.01
3	SLU 13	685	6	2273	-0.44	51.39	-0.01
3	SLU 14	674	6	2337	-0.32	50.91	-0.01
3	SLU 15	686	6	2312	-0.39	51.64	-0.01
3	SLU 16	672	6	2338	-0.31	50.84	-0.01
3	SLU 17	684	6	2314	-0.39	51.57	-0.01
3	SLU 18	686	7	2353	-0.32	51.62	-0.01
3	SLU 19	699	6	2328	-0.4	52.35	-0.01
3	SLU 20	694	7	2377	-0.32	52.29	-0.01
3	SLU 21	706	6	2352	-0.4	53.01	-0.01
3	SLU 22	640	6	2256	-0.33	48.46	-0.01
3	SLU 23	660	6	2215	-0.46	49.67	-0.01
3	SLU 24	649	6	2279	-0.33	49.19	-0.01
3	SLU 25	661	6	2254	-0.41	49.92	-0.01
3	SLU 26	668	6	2239	-0.46	50.33	-0.01
3	SLU 27	657	6	2303	-0.33	49.86	-0.01
3	SLU 28	669	6	2278	-0.41	50.58	-0.01
3	SLU 29	655	6	2305	-0.33	49.78	-0.01
3	SLU 30	668	6	2280	-0.41	50.51	-0.01
3	SLU 31	729	6	2361	-0.48	54.59	-0.01
3	SLU 32	718	7	2425	-0.36	54.11	-0.01
3	SLU 33	730	7	2400	-0.44	54.84	-0.01
3	SLU 34	737	6	2385	-0.48	55.25	-0.01
3	SLU 35	725	7	2449	-0.36	54.77	-0.01
3	SLU 36	737	7	2424	-0.43	55.5	-0.01
3	SLU 37	724	7	2451	-0.35	54.7	-0.01
3	SLU 38	736	7	2426	-0.43	55.43	-0.01
3	SLU 39	738	7	2465	-0.36	55.48	-0.01
3	SLU 40	750	7	2440	-0.44	56.21	-0.01
3	SLU 41	746	7	2489	-0.36	56.15	-0.01
3	SLU 42	758	7	2464	-0.44	56.87	-0.01
3	SLU 43	747	7	2749	-0.36	56.65	-0.01
3	SLU 44	767	7	2708	-0.49	57.86	-0.02
3	SLU 45	756	7	2772	-0.36	57.39	-0.01
3	SLU 46	768	7	2747	-0.44	58.12	-0.02
3	SLU 47	775	7	2732	-0.49	58.53	-0.02
3	SLU 48	764	7	2796	-0.36	58.05	-0.01
3	SLU 49	776	7	2771	-0.44	58.78	-0.02
3	SLU 50	762	7	2797	-0.36	57.98	-0.01
3	SLU 51	775	7	2773	-0.44	58.7	-0.02
3	SLU 52	836	7	2854	-0.51	62.78	-0.02
3	SLU 53	825	8	2918	-0.39	62.31	-0.02
3	SLU 54	837	8	2893	-0.47	63.03	-0.02
3	SLU 55	844	7	2878	-0.51	63.44	-0.02
3	SLU 56	832	8	2942	-0.39	62.97	-0.02
3	SLU 57	844	8	2917	-0.47	63.7	-0.02
3	SLU 58	831	8	2943	-0.38	62.9	-0.02
3	SLU 59	843	8	2919	-0.46	63.62	-0.02
3	SLU 60	845	8	2958	-0.4	63.68	-0.02
3	SLU 61	857	8	2933	-0.47	64.41	-0.02
3	SLU 62	853	8	2982	-0.39	64.34	-0.02
3	SLU 63	865	8	2957	-0.47	65.07	-0.02
3	SLU 64	799	8	2861	-0.4	60.51	-0.02
3	SLU 65	819	7	2820	-0.53	61.72	-0.02
3	SLU 66	808	8	2884	-0.41	61.25	-0.02
3	SLU 67	820	7	2859	-0.48	61.98	-0.02
3	SLU 68	827	7	2844	-0.53	62.39	-0.02
3	SLU 69	815	8	2908	-0.4	61.91	-0.02
3	SLU 70	828	8	2883	-0.48	62.64	-0.02
3	SLU 71	814	8	2909	-0.4	61.84	-0.02
3	SLU 72	826	8	2885	-0.48	62.56	-0.02
3	SLU 73	888	8	2966	-0.56	66.64	-0.02
3	SLU 74	876	8	3030	-0.43	66.17	-0.02
3	SLU 75	889	8	3005	-0.51	66.9	-0.02
3	SLU 76	895	8	2990	-0.55	67.31	-0.02
3	SLU 77	884	9	3054	-0.43	66.83	-0.02
3	SLU 78	896	8	3029	-0.51	67.56	-0.02
3	SLU 79	883	8	3055	-0.43	66.76	-0.02
3	SLU 80	895	8	3031	-0.5	67.48	-0.02
3	SLU 81	897	9	3070	-0.44	67.54	-0.02
3	SLU 82	909	8	3045	-0.51	68.27	-0.02
3	SLU 83	905	9	3094	-0.44	68.2	-0.02

Nodo	Cont.	Reazione a traslazione			Reazione a rotazione		
Ind.	N.br.	x	y	z	x	y	z
3	SLU 84	917	8	3069	-0.51	68.93	-0.02
3	SLE RA 1	603	6	2176	-0.3	45.7	-0.01
3	SLE RA 2	617	5	2149	-0.39	46.51	-0.01
3	SLE RA 3	609	6	2191	-0.3	46.19	-0.01
3	SLE RA 4	617	6	2175	-0.35	46.68	-0.01
3	SLE RA 5	622	6	2165	-0.39	46.95	-0.01
3	SLE RA 6	614	6	2208	-0.3	46.63	-0.01
3	SLE RA 7	622	6	2191	-0.35	47.12	-0.01
3	SLE RA 8	613	6	2208	-0.3	46.58	-0.01
3	SLE RA 9	622	6	2192	-0.35	47.07	-0.01
3	SLE RA 10	662	6	2246	-0.4	49.79	-0.01
3	SLE RA 11	655	6	2289	-0.32	49.47	-0.01
3	SLE RA 12	663	6	2272	-0.37	49.95	-0.01
3	SLE RA 13	668	6	2262	-0.4	50.23	-0.01
3	SLE RA 14	660	6	2305	-0.32	49.91	-0.01
3	SLE RA 15	668	6	2288	-0.37	50.4	-0.01
3	SLE RA 16	659	6	2306	-0.32	49.86	-0.01
3	SLE RA 17	667	6	2289	-0.37	50.35	-0.01
3	SLE RA 18	669	6	2315	-0.32	50.38	-0.01
3	SLE RA 19	677	6	2299	-0.37	50.87	-0.01
3	SLE RA 20	674	6	2331	-0.32	50.83	-0.01
3	SLE RA 21	682	6	2315	-0.37	51.31	-0.01
3	SLE FR 1	603	6	2176	-0.3	45.7	-0.01
3	SLE FR 2	606	6	2171	-0.32	45.86	-0.01
3	SLE FR 3	605	6	2183	-0.3	45.88	-0.01
3	SLE FR 4	625	6	2213	-0.32	47.27	-0.01
3	SLE FR 5	625	6	2224	-0.31	47.28	-0.01
3	SLE FR 6	636	6	2246	-0.31	48.04	-0.01
3	SLE QP 1	603	6	2176	-0.3	45.7	-0.01
3	SLE QP 2	623	6	2218	-0.31	47.11	-0.01
3	SLD 1	973	8	3191	1.5	67.31	-0.02
3	SLD 2	973	8	3191	1.5	67.31	-0.02
3	SLD 3	863	6	2707	0.5	60.75	-0.01
3	SLD 4	863	6	2707	0.5	60.75	-0.01
3	SLD 5	895	9	3243	1.74	63.12	-0.02
3	SLD 6	895	9	3243	1.74	63.12	-0.02
3	SLD 7	528	3	1631	-1.57	41.24	-0.01
3	SLD 8	528	3	1631	-1.57	41.24	-0.01
3	SLD 9	718	9	2805	0.95	52.97	-0.01
3	SLD 10	718	9	2805	0.95	52.97	-0.01
3	SLD 11	351	3	1193	-2.35	31.09	-0.01
3	SLD 12	351	3	1193	-2.35	31.09	-0.01
3	SLD 13	383	6	1729	-1.12	33.46	-0.01
3	SLD 14	383	6	1729	-1.12	33.46	-0.01
3	SLD 15	273	4	1246	-2.11	26.9	-0.01
3	SLD 16	273	4	1246	-2.11	26.9	-0.01
3	SLV 1	1432	11	4467	3.9	94.03	-0.02
3	SLV 2	1432	11	4467	3.9	94.03	-0.02
3	SLV 3	1171	6	3333	1.58	78.48	-0.02
3	SLV 4	1171	6	3333	1.58	78.48	-0.02
3	SLV 5	1262	14	4612	4.47	84.75	-0.02
3	SLV 6	1262	14	4612	4.47	84.75	-0.02
3	SLV 7	391	0	834	-3.25	32.95	-0.01
3	SLV 8	391	0	834	-3.25	32.95	-0.01
3	SLV 9	854	12	3603	2.64	61.26	-0.02
3	SLV 10	854	12	3603	2.64	61.26	-0.02
3	SLV 11	-16	-2	-176	-5.08	9.46	0
3	SLV 12	-16	-2	-176	-5.08	9.46	0
3	SLV 13	74	6	1103	-2.2	15.73	-0.01
3	SLV 14	74	6	1103	-2.2	15.73	-0.01
3	SLV 15	-187	1	-31	-4.51	0.19	0
3	SLV 16	-187	1	-31	-4.51	0.19	0
4	SLU 1	217	0	2121	1.36	-7.98	-0.01
4	SLU 2	223	0	2096	0.84	-8.24	0
4	SLU 3	220	0	2143	1.39	-8.18	-0.01
4	SLU 4	223	0	2128	1.08	-8.34	0
4	SLU 5	225	0	2118	0.87	-8.46	0
4	SLU 6	221	0	2166	1.42	-8.4	-0.01
4	SLU 7	225	0	2151	1.1	-8.56	0
4	SLU 8	220	0	2166	1.42	-8.42	-0.01
4	SLU 9	224	0	2151	1.11	-8.58	0
4	SLU 10	257	0	2253	0.98	-8.67	0
4	SLU 11	254	0	2301	1.52	-8.6	-0.01
4	SLU 12	258	0	2286	1.21	-8.76	-0.01
4	SLU 13	259	0	2276	1.01	-8.89	0
4	SLU 14	256	0	2324	1.55	-8.83	-0.01
4	SLU 15	259	0	2309	1.24	-8.99	-0.01
4	SLU 16	255	0	2324	1.56	-8.85	-0.01
4	SLU 17	258	0	2309	1.24	-9.01	-0.01
4	SLU 18	266	0	2346	1.56	-8.58	-0.01
4	SLU 19	270	0	2331	1.24	-8.74	-0.01
4	SLU 20	268	0	2369	1.59	-8.81	-0.01
4	SLU 21	271	0	2354	1.27	-8.97	-0.01
4	SLU 22	240	0	2241	1.43	-8.57	-0.01
4	SLU 23	246	0	2216	0.91	-8.84	0
4	SLU 24	243	0	2264	1.46	-8.77	-0.01
4	SLU 25	246	0	2249	1.15	-8.93	0
4	SLU 26	247	0	2239	0.94	-9.06	0
4	SLU 27	244	0	2287	1.49	-9	-0.01
4	SLU 28	248	0	2271	1.18	-9.15	0
4	SLU 29	243	0	2287	1.49	-9.02	-0.01

Nodo	Cont.	Reazione a traslazione			Reazione a rotazione		
Ind.	N.br.	x	y	z	x	y	z
4	SLU 30	247	0	2272	1.18	-9.17	0
4	SLU 31	280	0	2374	1.05	-9.26	0
4	SLU 32	277	0	2422	1.6	-9.2	-0.01
4	SLU 33	281	0	2407	1.29	-9.36	-0.01
4	SLU 34	282	0	2397	1.08	-9.48	0
4	SLU 35	279	0	2445	1.63	-9.42	-0.01
4	SLU 36	282	0	2429	1.32	-9.58	-0.01
4	SLU 37	277	0	2445	1.63	-9.44	-0.01
4	SLU 38	281	0	2429	1.32	-9.6	-0.01
4	SLU 39	289	0	2467	1.63	-9.18	-0.01
4	SLU 40	292	0	2452	1.32	-9.34	-0.01
4	SLU 41	290	0	2490	1.66	-9.4	-0.01
4	SLU 42	294	0	2474	1.35	-9.56	-0.01
4	SLU 43	274	0	2716	1.74	-10.17	-0.01
4	SLU 44	280	0	2691	1.22	-10.43	-0.01
4	SLU 45	277	0	2738	1.77	-10.37	-0.01
4	SLU 46	281	0	2723	1.46	-10.53	-0.01
4	SLU 47	282	0	2713	1.25	-10.65	-0.01
4	SLU 48	279	0	2761	1.8	-10.59	-0.01
4	SLU 49	282	0	2746	1.49	-10.75	-0.01
4	SLU 50	278	-1	2761	1.8	-10.61	-0.01
4	SLU 51	281	0	2746	1.49	-10.77	-0.01
4	SLU 52	315	0	2848	1.36	-10.86	-0.01
4	SLU 53	311	0	2896	1.91	-10.79	-0.01
4	SLU 54	315	0	2881	1.6	-10.95	-0.01
4	SLU 55	316	0	2871	1.39	-11.08	-0.01
4	SLU 56	313	0	2919	1.94	-11.01	-0.01
4	SLU 57	317	0	2904	1.62	-11.17	-0.01
4	SLU 58	312	0	2919	1.94	-11.03	-0.01
4	SLU 59	316	0	2904	1.63	-11.19	-0.01
4	SLU 60	323	0	2941	1.94	-10.77	-0.01
4	SLU 61	327	0	2926	1.63	-10.93	-0.01
4	SLU 62	325	0	2964	1.97	-11	-0.01
4	SLU 63	329	0	2949	1.66	-11.15	-0.01
4	SLU 64	297	0	2836	1.81	-10.76	-0.01
4	SLU 65	303	0	2811	1.3	-11.03	-0.01
4	SLU 66	300	0	2859	1.84	-10.96	-0.01
4	SLU 67	303	0	2844	1.53	-11.12	-0.01
4	SLU 68	305	0	2834	1.33	-11.25	-0.01
4	SLU 69	302	0	2882	1.87	-11.18	-0.01
4	SLU 70	305	0	2866	1.56	-11.34	-0.01
4	SLU 71	300	0	2882	1.87	-11.2	-0.01
4	SLU 72	304	0	2867	1.56	-11.36	-0.01
4	SLU 73	337	0	2969	1.43	-11.45	-0.01
4	SLU 74	334	0	3017	1.98	-11.39	-0.01
4	SLU 75	338	0	3002	1.67	-11.55	-0.01
4	SLU 76	339	0	2992	1.46	-11.67	-0.01
4	SLU 77	336	0	3040	2.01	-11.61	-0.01
4	SLU 78	339	0	3024	1.7	-11.77	-0.01
4	SLU 79	335	0	3040	2.01	-11.63	-0.01
4	SLU 80	338	0	3024	1.7	-11.79	-0.01
4	SLU 81	346	0	3062	2.01	-11.37	-0.01
4	SLU 82	350	0	3047	1.7	-11.53	-0.01
4	SLU 83	348	0	3085	2.04	-11.59	-0.01
4	SLU 84	351	0	3069	1.73	-11.75	-0.01
4	SLE RA 1	223	0	2155	1.38	-8.15	-0.01
4	SLE RA 2	227	0	2138	1.03	-8.32	0
4	SLE RA 3	225	0	2170	1.4	-8.28	-0.01
4	SLE RA 4	228	0	2160	1.19	-8.39	0
4	SLE RA 5	229	0	2154	1.05	-8.47	0
4	SLE RA 6	226	0	2186	1.42	-8.43	-0.01
4	SLE RA 7	229	0	2175	1.21	-8.54	0
4	SLE RA 8	226	0	2186	1.42	-8.44	-0.01
4	SLE RA 9	228	0	2175	1.21	-8.55	0
4	SLE RA 10	250	0	2244	1.13	-8.61	0
4	SLE RA 11	248	0	2276	1.49	-8.57	-0.01
4	SLE RA 12	251	0	2266	1.28	-8.67	-0.01
4	SLE RA 13	251	0	2259	1.15	-8.76	0
4	SLE RA 14	249	0	2291	1.51	-8.71	-0.01
4	SLE RA 15	252	0	2281	1.3	-8.82	-0.01
4	SLE RA 16	249	0	2291	1.51	-8.73	-0.01
4	SLE RA 17	251	0	2281	1.3	-8.83	-0.01
4	SLE RA 18	256	0	2306	1.51	-8.55	-0.01
4	SLE RA 19	259	0	2296	1.3	-8.66	-0.01
4	SLE RA 20	257	0	2321	1.53	-8.7	-0.01
4	SLE RA 21	260	0	2311	1.32	-8.81	-0.01
4	SLE FR 1	223	0	2155	1.38	-8.15	-0.01
4	SLE FR 2	224	0	2152	1.31	-8.18	-0.01
4	SLE FR 3	224	0	2161	1.39	-8.21	-0.01
4	SLE FR 4	234	0	2197	1.35	-8.3	-0.01
4	SLE FR 5	234	0	2206	1.43	-8.33	-0.01
4	SLE FR 6	240	0	2230	1.45	-8.35	-0.01
4	SLE QP 1	223	0	2155	1.38	-8.15	-0.01
4	SLE QP 2	233	0	2200	1.42	-8.27	-0.01
4	SLD 1	539	-3	2935	5.57	5.08	-0.02
4	SLD 2	539	-3	2935	5.57	5.08	-0.02
4	SLD 3	447	-2	2563	3.72	1.67	-0.02
4	SLD 4	447	-2	2563	3.72	1.67	-0.02
4	SLD 5	464	-4	2984	5.47	0.91	-0.02
4	SLD 6	464	-4	2984	5.47	0.91	-0.02
4	SLD 7	158	2	1746	-0.7	-10.46	0

Nodo	Cont.	Reazione a traslazione			Reazione a rotazione		
Ind.	N.br.	x	y	z	x	y	z
4	SLD 8	158	2	1746	-0.7	-10.46	0
4	SLD 9	308	-2	2655	3.54	-6.08	-0.01
4	SLD 10	308	-2	2655	3.54	-6.08	-0.01
4	SLD 11	2	3	1417	-2.64	-17.44	0.01
4	SLD 12	2	3	1417	-2.64	-17.44	0.01
4	SLD 13	19	1	1837	-0.88	-18.21	0.01
4	SLD 14	19	1	1837	-0.88	-18.21	0.01
4	SLD 15	-73	3	1466	-2.73	-21.62	0.01
4	SLD 16	-73	3	1466	-2.73	-21.62	0.01
4	SLV 1	936	-7	3904	11.14	22.37	-0.05
4	SLV 2	936	-7	3904	11.14	22.37	-0.05
4	SLV 3	719	-4	3036	6.76	14.05	-0.03
4	SLV 4	719	-4	3036	6.76	14.05	-0.03
4	SLV 5	772	-8	4028	10.98	13.53	-0.05
4	SLV 6	772	-8	4028	10.98	13.53	-0.05
4	SLV 7	51	4	1135	-3.63	-14.19	0.01
4	SLV 8	51	4	1135	-3.63	-14.19	0.01
4	SLV 9	416	-5	3266	6.46	-2.35	-0.03
4	SLV 10	416	-5	3266	6.46	-2.35	-0.03
4	SLV 11	-306	8	373	-8.14	-30.07	0.04
4	SLV 12	-306	8	373	-8.14	-30.07	0.04
4	SLV 13	-253	3	1365	-3.92	-30.59	0.02
4	SLV 14	-253	3	1365	-3.92	-30.59	0.02
4	SLV 15	-469	7	497	-8.3	-38.9	0.04
4	SLV 16	-469	7	497	-8.3	-38.9	0.04
5	SLU 1	526	-5	2187	3	38.67	-0.02
5	SLU 2	539	-4	2164	2.08	39.71	-0.02
5	SLU 3	535	-5	2211	3.07	39.37	-0.02
5	SLU 4	543	-4	2197	2.51	39.99	-0.02
5	SLU 5	546	-4	2187	2.14	40.31	-0.02
5	SLU 6	543	-5	2233	3.13	39.97	-0.02
5	SLU 7	550	-4	2220	2.57	40.59	-0.02
5	SLU 8	541	-5	2232	3.12	39.87	-0.02
5	SLU 9	549	-4	2218	2.57	40.5	-0.02
5	SLU 10	608	-4	2344	2.4	44.29	-0.02
5	SLU 11	604	-5	2391	3.39	43.95	-0.03
5	SLU 12	612	-5	2377	2.83	44.57	-0.02
5	SLU 13	615	-4	2366	2.46	44.89	-0.02
5	SLU 14	611	-5	2413	3.45	44.55	-0.03
5	SLU 15	619	-5	2400	2.89	45.18	-0.02
5	SLU 16	609	-5	2411	3.44	44.46	-0.03
5	SLU 17	617	-5	2398	2.89	45.08	-0.02
5	SLU 18	624	-5	2443	3.46	45.22	-0.03
5	SLU 19	632	-5	2430	2.91	45.84	-0.02
5	SLU 20	631	-5	2466	3.52	45.82	-0.03
5	SLU 21	639	-5	2452	2.96	46.44	-0.03
5	SLU 22	576	-5	2322	3.21	42.21	-0.03
5	SLU 23	590	-4	2300	2.29	43.25	-0.02
5	SLU 24	586	-5	2346	3.27	42.91	-0.03
5	SLU 25	594	-4	2333	2.72	43.54	-0.02
5	SLU 26	597	-4	2322	2.35	43.86	-0.02
5	SLU 27	593	-5	2369	3.33	43.52	-0.03
5	SLU 28	601	-5	2356	2.78	44.14	-0.02
5	SLU 29	591	-5	2367	3.33	43.42	-0.03
5	SLU 30	599	-5	2354	2.77	44.04	-0.02
5	SLU 31	658	-5	2479	2.61	47.84	-0.02
5	SLU 32	654	-5	2526	3.59	47.5	-0.03
5	SLU 33	662	-5	2513	3.04	48.12	-0.03
5	SLU 34	666	-5	2502	2.66	48.44	-0.02
5	SLU 35	662	-6	2549	3.65	48.1	-0.03
5	SLU 36	670	-5	2535	3.1	48.72	-0.03
5	SLU 37	660	-6	2547	3.65	48	-0.03
5	SLU 38	668	-5	2534	3.09	48.63	-0.03
5	SLU 39	674	-6	2579	3.67	48.76	-0.03
5	SLU 40	682	-5	2565	3.11	49.39	-0.03
5	SLU 41	682	-6	2602	3.73	49.36	-0.03
5	SLU 42	690	-5	2588	3.17	49.99	-0.03
5	SLU 43	666	-6	2796	3.83	49.05	-0.03
5	SLU 44	679	-5	2773	2.91	50.09	-0.03
5	SLU 45	675	-6	2820	3.9	49.75	-0.03
5	SLU 46	683	-5	2807	3.34	50.38	-0.03
5	SLU 47	687	-5	2796	2.97	50.69	-0.03
5	SLU 48	683	-6	2843	3.96	50.35	-0.03
5	SLU 49	691	-6	2829	3.4	50.98	-0.03
5	SLU 50	681	-6	2841	3.95	50.26	-0.03
5	SLU 51	689	-6	2828	3.4	50.88	-0.03
5	SLU 52	748	-6	2953	3.23	54.68	-0.03
5	SLU 53	744	-6	3000	4.22	54.34	-0.03
5	SLU 54	752	-6	2986	3.66	54.96	-0.03
5	SLU 55	755	-6	2976	3.29	55.28	-0.03
5	SLU 56	752	-7	3023	4.28	54.94	-0.03
5	SLU 57	759	-6	3009	3.72	55.56	-0.03
5	SLU 58	750	-7	3021	4.27	54.84	-0.03
5	SLU 59	758	-6	3007	3.72	55.46	-0.03
5	SLU 60	764	-7	3053	4.29	55.6	-0.03
5	SLU 61	772	-6	3039	3.74	56.22	-0.03
5	SLU 62	772	-7	3075	4.35	56.2	-0.03
5	SLU 63	780	-6	3062	3.79	56.83	-0.03
5	SLU 64	717	-6	2932	4.04	52.6	-0.03
5	SLU 65	730	-5	2909	3.12	53.64	-0.03
5	SLU 66	726	-6	2956	4.1	53.3	-0.03

Nodo	Cont.	Reazione a traslazione			Reazione a rotazione		
Ind.	N.br.	x	y	z	x	y	z
5	SLU 67	734	-6	2942	3.55	53.92	-0.03
5	SLU 68	737	-5	2932	3.18	54.24	-0.03
5	SLU 69	734	-6	2979	4.16	53.9	-0.03
5	SLU 70	741	-6	2965	3.61	54.52	-0.03
5	SLU 71	732	-6	2977	4.16	53.8	-0.03
5	SLU 72	740	-6	2963	3.6	54.43	-0.03
5	SLU 73	799	-6	3089	3.44	58.22	-0.03
5	SLU 74	795	-7	3136	4.42	57.88	-0.03
5	SLU 75	803	-6	3122	3.87	58.51	-0.03
5	SLU 76	806	-6	3111	3.49	58.82	-0.03
5	SLU 77	802	-7	3158	4.48	58.48	-0.04
5	SLU 78	810	-6	3145	3.93	59.11	-0.03
5	SLU 79	800	-7	3157	4.48	58.39	-0.04
5	SLU 80	808	-6	3143	3.92	59.01	-0.03
5	SLU 81	815	-7	3188	4.5	59.15	-0.04
5	SLU 82	823	-6	3175	3.94	59.77	-0.03
5	SLU 83	822	-7	3211	4.56	59.75	-0.04
5	SLU 84	830	-6	3197	4	60.37	-0.03
5	SLE RA 1	540	-5	2225	3.06	39.68	-0.02
5	SLE RA 2	549	-4	2210	2.45	40.37	-0.02
5	SLE RA 3	546	-5	2241	3.11	40.15	-0.02
5	SLE RA 4	552	-4	2232	2.73	40.56	-0.02
5	SLE RA 5	554	-4	2225	2.49	40.78	-0.02
5	SLE RA 6	551	-5	2257	3.14	40.55	-0.02
5	SLE RA 7	557	-4	2248	2.77	40.96	-0.02
5	SLE RA 8	550	-5	2255	3.14	40.48	-0.02
5	SLE RA 9	555	-4	2246	2.77	40.9	-0.02
5	SLE RA 10	595	-4	2330	2.66	43.43	-0.02
5	SLE RA 11	592	-5	2361	3.32	43.2	-0.03
5	SLE RA 12	598	-5	2352	2.95	43.62	-0.02
5	SLE RA 13	600	-4	2345	2.7	43.83	-0.02
5	SLE RA 14	597	-5	2376	3.36	43.6	-0.03
5	SLE RA 15	602	-5	2367	2.99	44.02	-0.02
5	SLE RA 16	596	-5	2375	3.36	43.54	-0.03
5	SLE RA 17	601	-5	2366	2.98	43.96	-0.02
5	SLE RA 18	606	-5	2396	3.37	44.05	-0.03
5	SLE RA 19	611	-5	2387	3	44.46	-0.02
5	SLE RA 20	611	-5	2412	3.41	44.45	-0.03
5	SLE RA 21	616	-5	2402	3.04	44.86	-0.03
5	SLE FR 1	540	-5	2225	3.06	39.68	-0.02
5	SLE FR 2	542	-5	2222	2.94	39.82	-0.02
5	SLE FR 3	542	-5	2231	3.08	39.84	-0.02
5	SLE FR 4	562	-5	2274	3.03	41.13	-0.02
5	SLE FR 5	562	-5	2283	3.17	41.15	-0.02
5	SLE FR 6	573	-5	2311	3.22	41.86	-0.03
5	SLE QP 1	540	-5	2225	3.06	39.68	-0.02
5	SLE QP 2	560	-5	2277	3.16	40.99	-0.02
5	SLD 1	911	-12	2911	9.83	59.79	-0.06
5	SLD 2	911	-12	2911	9.83	59.79	-0.06
5	SLD 3	786	-10	2558	6.95	53	-0.05
5	SLD 4	786	-10	2558	6.95	53	-0.05
5	SLD 5	855	-11	3003	9.52	56.93	-0.06
5	SLD 6	855	-11	3003	9.52	56.93	-0.06
5	SLD 7	438	-2	1825	-0.07	34.29	-0.01
5	SLD 8	438	-2	1825	-0.07	34.29	-0.01
5	SLD 9	682	-8	2729	6.38	47.69	-0.04
5	SLD 10	682	-8	2729	6.38	47.69	-0.04
5	SLD 11	265	2	1550	-3.21	25.05	0.01
5	SLD 12	265	2	1550	-3.21	25.05	0.01
5	SLD 13	334	0	1996	-0.64	28.98	0
5	SLD 14	334	0	1996	-0.64	28.98	0
5	SLD 15	209	3	1642	-3.52	22.19	0.01
5	SLD 16	209	3	1642	-3.52	22.19	0.01
5	SLV 1	1370	-23	3755	18.79	84.59	-0.11
5	SLV 2	1370	-23	3755	18.79	84.59	-0.11
5	SLV 3	1077	-16	2928	11.97	68.62	-0.08
5	SLV 4	1077	-16	2928	11.97	68.62	-0.08
5	SLV 5	1248	-21	3975	18.18	78.3	-0.1
5	SLV 6	1248	-21	3975	18.18	78.3	-0.1
5	SLV 7	270	2	1218	-4.54	25.05	0.01
5	SLV 8	270	2	1218	-4.54	25.05	0.01
5	SLV 9	850	-12	3336	10.85	56.93	-0.06
5	SLV 10	850	-12	3336	10.85	56.93	-0.06
5	SLV 11	-128	11	579	-11.87	3.68	0.05
5	SLV 12	-128	11	579	-11.87	3.68	0.05
5	SLV 13	43	6	1625	-5.66	13.36	0.03
5	SLV 14	43	6	1625	-5.66	13.36	0.03
5	SLV 15	-250	13	798	-12.48	-2.61	0.06
5	SLV 16	-250	13	798	-12.48	-2.61	0.06
6	SLU 1	296	-8	2380	4.12	-2.1	-0.04
6	SLU 2	301	-6	2358	2.87	-2.27	-0.03
6	SLU 3	301	-8	2408	4.2	-2.14	-0.04
6	SLU 4	304	-7	2395	3.46	-2.25	-0.03
6	SLU 5	305	-6	2383	2.95	-2.36	-0.03
6	SLU 6	305	-8	2433	4.28	-2.24	-0.04
6	SLU 7	308	-7	2420	3.54	-2.34	-0.03
6	SLU 8	303	-8	2429	4.27	-2.28	-0.04
6	SLU 9	306	-7	2416	3.53	-2.39	-0.03
6	SLU 10	346	-7	2573	3.32	-1.97	-0.03
6	SLU 11	346	-9	2623	4.65	-1.85	-0.04
6	SLU 12	349	-8	2610	3.9	-1.95	-0.04

Nodo	Cont.	Reazione a traslazione			Reazione a rotazione		
Ind.	N.br.	x	y	z	x	y	z
6	SLU 13	349	-7	2598	3.4	-2.06	-0.03
6	SLU 14	349	-9	2647	4.73	-1.94	-0.04
6	SLU 15	353	-8	2635	3.98	-2.04	-0.04
6	SLU 16	348	-9	2644	4.72	-1.99	-0.04
6	SLU 17	351	-8	2631	3.98	-2.09	-0.04
6	SLU 18	359	-9	2686	4.76	-1.67	-0.04
6	SLU 19	363	-8	2673	4.01	-1.77	-0.04
6	SLU 20	363	-9	2711	4.83	-1.76	-0.04
6	SLU 21	366	-8	2698	4.09	-1.87	-0.04
6	SLU 22	325	-8	2540	4.42	-2.16	-0.04
6	SLU 23	331	-7	2519	3.18	-2.33	-0.03
6	SLU 24	331	-8	2569	4.51	-2.2	-0.04
6	SLU 25	334	-7	2556	3.76	-2.31	-0.04
6	SLU 26	334	-7	2544	3.26	-2.42	-0.03
6	SLU 27	335	-8	2594	4.59	-2.3	-0.04
6	SLU 28	338	-8	2581	3.84	-2.4	-0.04
6	SLU 29	333	-8	2590	4.58	-2.34	-0.04
6	SLU 30	336	-8	2577	3.83	-2.45	-0.04
6	SLU 31	375	-8	2734	3.63	-2.03	-0.04
6	SLU 32	375	-9	2783	4.95	-1.91	-0.04
6	SLU 33	379	-8	2771	4.21	-2.01	-0.04
6	SLU 34	379	-8	2759	3.7	-2.12	-0.04
6	SLU 35	379	-9	2808	5.03	-2	-0.04
6	SLU 36	382	-8	2795	4.29	-2.1	-0.04
6	SLU 37	377	-9	2804	5.03	-2.05	-0.04
6	SLU 38	381	-8	2792	4.28	-2.15	-0.04
6	SLU 39	389	-9	2847	5.06	-1.73	-0.04
6	SLU 40	392	-9	2834	4.31	-1.83	-0.04
6	SLU 41	393	-9	2872	5.14	-1.83	-0.05
6	SLU 42	396	-9	2859	4.39	-1.93	-0.04
6	SLU 43	374	-10	3038	5.25	-2.7	-0.05
6	SLU 44	380	-8	3017	4	-2.88	-0.04
6	SLU 45	380	-10	3067	5.33	-2.75	-0.05
6	SLU 46	383	-9	3054	4.59	-2.85	-0.04
6	SLU 47	383	-8	3042	4.08	-2.97	-0.04
6	SLU 48	383	-10	3091	5.41	-2.84	-0.05
6	SLU 49	387	-9	3079	4.67	-2.95	-0.04
6	SLU 50	382	-10	3088	5.4	-2.89	-0.05
6	SLU 51	385	-9	3075	4.66	-2.99	-0.04
6	SLU 52	424	-9	3232	4.45	-2.58	-0.04
6	SLU 53	424	-11	3281	5.78	-2.45	-0.05
6	SLU 54	428	-10	3269	5.04	-2.56	-0.05
6	SLU 55	428	-9	3256	4.53	-2.67	-0.04
6	SLU 56	428	-11	3306	5.86	-2.55	-0.05
6	SLU 57	431	-10	3293	5.11	-2.65	-0.05
6	SLU 58	426	-11	3302	5.85	-2.59	-0.05
6	SLU 59	429	-10	3290	5.11	-2.7	-0.05
6	SLU 60	438	-11	3345	5.89	-2.28	-0.05
6	SLU 61	441	-10	3332	5.14	-2.38	-0.05
6	SLU 62	442	-11	3370	5.97	-2.37	-0.05
6	SLU 63	445	-10	3357	5.22	-2.47	-0.05
6	SLU 64	404	-10	3199	5.55	-2.77	-0.05
6	SLU 65	409	-9	3178	4.31	-2.94	-0.04
6	SLU 66	409	-10	3227	5.64	-2.81	-0.05
6	SLU 67	413	-10	3215	4.89	-2.92	-0.05
6	SLU 68	413	-9	3203	4.39	-3.03	-0.04
6	SLU 69	413	-11	3252	5.72	-2.91	-0.05
6	SLU 70	416	-10	3240	4.97	-3.01	-0.05
6	SLU 71	411	-11	3249	5.71	-2.95	-0.05
6	SLU 72	415	-10	3236	4.96	-3.05	-0.05
6	SLU 73	454	-10	3392	4.76	-2.64	-0.05
6	SLU 74	454	-11	3442	6.08	-2.51	-0.05
6	SLU 75	457	-10	3429	5.34	-2.62	-0.05
6	SLU 76	458	-10	3417	4.84	-2.73	-0.05
6	SLU 77	458	-11	3467	6.16	-2.61	-0.05
6	SLU 78	461	-11	3454	5.42	-2.71	-0.05
6	SLU 79	456	-11	3463	6.16	-2.65	-0.05
6	SLU 80	459	-11	3450	5.41	-2.76	-0.05
6	SLU 81	468	-11	3506	6.19	-2.34	-0.05
6	SLU 82	471	-11	3493	5.45	-2.44	-0.05
6	SLU 83	471	-12	3530	6.27	-2.43	-0.06
6	SLU 84	475	-11	3518	5.52	-2.54	-0.05
6	SLE RA 1	304	-8	2425	4.2	-2.11	-0.04
6	SLE RA 2	308	-7	2411	3.37	-2.23	-0.03
6	SLE RA 3	308	-8	2444	4.26	-2.15	-0.04
6	SLE RA 4	310	-7	2436	3.76	-2.21	-0.03
6	SLE RA 5	310	-7	2428	3.43	-2.29	-0.03
6	SLE RA 6	310	-8	2461	4.31	-2.21	-0.04
6	SLE RA 7	312	-7	2452	3.82	-2.28	-0.04
6	SLE RA 8	309	-8	2458	4.31	-2.24	-0.04
6	SLE RA 9	311	-7	2450	3.81	-2.31	-0.04
6	SLE RA 10	338	-7	2554	3.67	-2.03	-0.04
6	SLE RA 11	338	-8	2587	4.56	-1.95	-0.04
6	SLE RA 12	340	-8	2579	4.06	-2.01	-0.04
6	SLE RA 13	340	-7	2571	3.73	-2.09	-0.04
6	SLE RA 14	340	-9	2604	4.61	-2.01	-0.04
6	SLE RA 15	342	-8	2596	4.11	-2.08	-0.04
6	SLE RA 16	339	-9	2602	4.61	-2.04	-0.04
6	SLE RA 17	341	-8	2593	4.11	-2.11	-0.04
6	SLE RA 18	347	-9	2630	4.63	-1.83	-0.04
6	SLE RA 19	349	-8	2621	4.13	-1.9	-0.04

Nodo	Cont.	Reazione a traslazione			Reazione a rotazione		
Ind.	N.br.	x	y	z	x	y	z
6	SLE RA 20	349	-9	2646	4.68	-1.89	-0.04
6	SLE RA 21	351	-8	2638	4.19	-1.96	-0.04
6	SLE FR 1	304	-8	2425	4.2	-2.11	-0.04
6	SLE FR 2	305	-8	2423	4.04	-2.14	-0.04
6	SLE FR 3	305	-8	2432	4.22	-2.14	-0.04
6	SLE FR 4	318	-8	2484	4.17	-2.05	-0.04
6	SLE FR 5	318	-8	2493	4.35	-2.05	-0.04
6	SLE FR 6	325	-8	2528	4.42	-1.97	-0.04
6	SLE QP 1	304	-8	2425	4.2	-2.11	-0.04
6	SLE QP 2	317	-8	2487	4.33	-2.03	-0.04
6	SLD 1	639	-19	3104	12.73	11.82	-0.09
6	SLD 2	639	-19	3104	12.73	11.82	-0.09
6	SLD 3	514	-15	2719	9.16	7.14	-0.07
6	SLD 4	514	-15	2719	9.16	7.14	-0.07
6	SLD 5	603	-17	3255	12.26	9.23	-0.08
6	SLD 6	603	-17	3255	12.26	9.23	-0.08
6	SLD 7	187	-4	1973	0.37	-6.38	-0.02
6	SLD 8	187	-4	1973	0.37	-6.38	-0.02
6	SLD 9	447	-12	3001	8.29	2.32	-0.05
6	SLD 10	447	-12	3001	8.29	2.32	-0.05
6	SLD 11	31	1	1718	-3.6	-13.29	0
6	SLD 12	31	1	1718	-3.6	-13.29	0
6	SLD 13	120	-1	2254	-0.5	-11.19	0
6	SLD 14	120	-1	2254	-0.5	-11.19	0
6	SLD 15	-5	3	1870	-4.06	-15.88	0.01
6	SLD 16	-5	3	1870	-4.06	-15.88	0.01
6	SLV 1	1057	-34	3931	23.99	29.75	-0.16
6	SLV 2	1057	-34	3931	23.99	29.75	-0.16
6	SLV 3	764	-25	3030	15.56	18.61	-0.12
6	SLV 4	764	-25	3030	15.56	18.61	-0.12
6	SLV 5	983	-30	4287	23.02	24.4	-0.14
6	SLV 6	983	-30	4287	23.02	24.4	-0.14
6	SLV 7	7	1	1283	-5.09	-12.73	0
6	SLV 8	7	1	1283	-5.09	-12.73	0
6	SLV 9	627	-17	3691	13.75	8.67	-0.08
6	SLV 10	627	-17	3691	13.75	8.67	-0.08
6	SLV 11	-349	14	687	-14.36	-28.46	0.06
6	SLV 12	-349	14	687	-14.36	-28.46	0.06
6	SLV 13	-130	9	1944	-6.9	-22.67	0.04
6	SLV 14	-130	9	1944	-6.9	-22.67	0.04
6	SLV 15	-423	18	1043	-15.33	-33.81	0.08
6	SLV 16	-423	18	1043	-15.33	-33.81	0.08
7	SLU 1	576	-8	2588	4.13	36.42	-0.03
7	SLU 2	589	-6	2566	2.74	37.36	-0.02
7	SLU 3	587	-8	2621	4.22	37.1	-0.03
7	SLU 4	595	-7	2608	3.39	37.67	-0.03
7	SLU 5	598	-6	2594	2.82	37.94	-0.03
7	SLU 6	596	-8	2648	4.3	37.69	-0.03
7	SLU 7	604	-7	2635	3.46	38.25	-0.03
7	SLU 8	594	-8	2642	4.29	37.58	-0.03
7	SLU 9	602	-7	2629	3.46	38.15	-0.03
7	SLU 10	663	-7	2817	3.19	41.7	-0.03
7	SLU 11	661	-9	2871	4.67	41.45	-0.04
7	SLU 12	669	-8	2858	3.84	42.01	-0.03
7	SLU 13	672	-7	2844	3.27	42.29	-0.03
7	SLU 14	670	-9	2899	4.75	42.03	-0.04
7	SLU 15	678	-8	2886	3.92	42.59	-0.03
7	SLU 16	667	-9	2893	4.74	41.93	-0.04
7	SLU 17	675	-8	2880	3.91	42.49	-0.03
7	SLU 18	682	-9	2946	4.77	42.62	-0.04
7	SLU 19	690	-8	2933	3.94	43.19	-0.03
7	SLU 20	690	-9	2973	4.85	43.2	-0.04
7	SLU 21	698	-8	2960	4.02	43.77	-0.03
7	SLU 22	629	-9	2774	4.44	39.69	-0.03
7	SLU 23	643	-7	2752	3.05	40.64	-0.03
7	SLU 24	640	-9	2807	4.52	40.38	-0.04
7	SLU 25	648	-8	2794	3.69	40.95	-0.03
7	SLU 26	651	-7	2779	3.13	41.22	-0.03
7	SLU 27	649	-9	2834	4.6	40.96	-0.04
7	SLU 28	657	-8	2821	3.77	41.53	-0.03
7	SLU 29	647	-9	2828	4.6	40.86	-0.04
7	SLU 30	655	-8	2815	3.76	41.42	-0.03
7	SLU 31	716	-8	3002	3.5	44.98	-0.03
7	SLU 32	714	-10	3057	4.97	44.72	-0.04
7	SLU 33	722	-9	3044	4.14	45.29	-0.03
7	SLU 34	725	-8	3030	3.58	45.56	-0.03
7	SLU 35	723	-10	3084	5.05	45.3	-0.04
7	SLU 36	731	-9	3071	4.22	45.87	-0.03
7	SLU 37	721	-10	3078	5.05	45.2	-0.04
7	SLU 38	729	-9	3065	4.22	45.77	-0.03
7	SLU 39	735	-10	3131	5.08	45.9	-0.04
7	SLU 40	743	-9	3118	4.25	46.46	-0.04
7	SLU 41	743	-10	3158	5.16	46.48	-0.04
7	SLU 42	751	-9	3145	4.33	47.04	-0.04
7	SLU 43	731	-10	3301	5.26	46.22	-0.04
7	SLU 44	744	-8	3279	3.88	47.16	-0.03
7	SLU 45	742	-10	3334	5.35	46.91	-0.04
7	SLU 46	750	-9	3321	4.52	47.47	-0.04
7	SLU 47	753	-9	3306	3.96	47.75	-0.03
7	SLU 48	750	-11	3361	5.43	47.49	-0.04
7	SLU 49	758	-10	3348	4.6	48.06	-0.04

Nodo	Cont.	Reazione a traslazione			Reazione a rotazione		
Ind.	N.br.	x	y	z	x	y	z
7	SLU 50	748	-11	3355	5.42	47.39	-0.04
7	SLU 51	756	-9	3342	4.59	47.95	-0.04
7	SLU 52	818	-9	3529	4.33	51.51	-0.04
7	SLU 53	815	-11	3584	5.8	51.25	-0.04
7	SLU 54	824	-10	3571	4.97	51.81	-0.04
7	SLU 55	827	-10	3557	4.41	52.09	-0.04
7	SLU 56	824	-11	3611	5.88	51.83	-0.05
7	SLU 57	832	-10	3598	5.05	52.4	-0.04
7	SLU 58	822	-11	3606	5.87	51.73	-0.05
7	SLU 59	830	-10	3593	5.04	52.29	-0.04
7	SLU 60	836	-12	3658	5.91	52.42	-0.05
7	SLU 61	844	-10	3645	5.07	52.99	-0.04
7	SLU 62	845	-12	3686	5.99	53.01	-0.05
7	SLU 63	853	-11	3673	5.15	53.57	-0.04
7	SLU 64	784	-11	3486	5.57	49.5	-0.04
7	SLU 65	797	-9	3465	4.18	50.44	-0.04
7	SLU 66	795	-11	3519	5.66	50.18	-0.04
7	SLU 67	803	-10	3506	4.83	50.75	-0.04
7	SLU 68	806	-9	3492	4.26	51.02	-0.04
7	SLU 69	804	-11	3547	5.74	50.76	-0.04
7	SLU 70	812	-10	3534	4.91	51.33	-0.04
7	SLU 71	801	-11	3541	5.73	50.66	-0.04
7	SLU 72	809	-10	3528	4.9	51.23	-0.04
7	SLU 73	871	-10	3715	4.63	54.78	-0.04
7	SLU 74	869	-12	3770	6.11	54.52	-0.05
7	SLU 75	877	-11	3757	5.28	55.09	-0.04
7	SLU 76	880	-10	3742	4.71	55.36	-0.04
7	SLU 77	877	-12	3797	6.19	55.11	-0.05
7	SLU 78	885	-11	3784	5.36	55.67	-0.04
7	SLU 79	875	-12	3791	6.18	55	-0.05
7	SLU 80	883	-11	3778	5.35	55.57	-0.04
7	SLU 81	889	-12	3844	6.21	55.7	-0.05
7	SLU 82	897	-11	3831	5.38	56.26	-0.04
7	SLU 83	898	-12	3871	6.29	56.28	-0.05
7	SLU 84	906	-11	3858	5.46	56.85	-0.04
7	SLE RA 1	591	-8	2641	4.22	37.35	-0.03
7	SLE RA 2	600	-7	2627	3.29	37.98	-0.03
7	SLE RA 3	599	-8	2663	4.28	37.81	-0.03
7	SLE RA 4	604	-8	2654	3.72	38.19	-0.03
7	SLE RA 5	606	-7	2645	3.35	38.37	-0.03
7	SLE RA 6	604	-8	2681	4.33	38.2	-0.03
7	SLE RA 7	610	-8	2673	3.77	38.58	-0.03
7	SLE RA 8	603	-8	2677	4.32	38.13	-0.03
7	SLE RA 9	608	-8	2669	3.77	38.51	-0.03
7	SLE RA 10	649	-8	2794	3.59	40.88	-0.03
7	SLE RA 11	648	-9	2830	4.58	40.71	-0.04
7	SLE RA 12	653	-8	2821	4.02	41.08	-0.03
7	SLE RA 13	655	-8	2812	3.65	41.27	-0.03
7	SLE RA 14	654	-9	2848	4.63	41.09	-0.04
7	SLE RA 15	659	-8	2839	4.07	41.47	-0.03
7	SLE RA 16	652	-9	2844	4.62	41.03	-0.04
7	SLE RA 17	657	-8	2836	4.07	41.4	-0.03
7	SLE RA 18	662	-9	2879	4.65	41.49	-0.04
7	SLE RA 19	667	-8	2871	4.09	41.87	-0.03
7	SLE RA 20	667	-9	2898	4.7	41.88	-0.04
7	SLE RA 21	673	-8	2889	4.14	42.25	-0.03
7	SLE FR 1	591	-8	2641	4.22	37.35	-0.03
7	SLE FR 2	593	-8	2638	4.03	37.48	-0.03
7	SLE FR 3	594	-8	2648	4.24	37.51	-0.03
7	SLE FR 4	614	-8	2710	4.16	38.72	-0.03
7	SLE FR 5	615	-9	2720	4.37	38.75	-0.03
7	SLE FR 6	626	-9	2760	4.43	39.42	-0.03
7	SLE QP 1	591	-8	2641	4.22	37.35	-0.03
7	SLE QP 2	612	-8	2713	4.35	38.59	-0.03
7	SLD 1	961	-20	3349	12.98	56.35	-0.08
7	SLD 2	961	-20	3349	12.98	56.35	-0.08
7	SLD 3	801	-16	2899	9.27	48.73	-0.06
7	SLD 4	801	-16	2899	9.27	48.73	-0.06
7	SLD 5	959	-19	3586	12.56	55.48	-0.07
7	SLD 6	959	-19	3586	12.56	55.48	-0.07
7	SLD 7	426	-4	2086	0.2	30.07	-0.02
7	SLD 8	426	-4	2086	0.2	30.07	-0.02
7	SLD 9	798	-13	3339	8.49	47.11	-0.05
7	SLD 10	798	-13	3339	8.49	47.11	-0.05
7	SLD 11	265	2	1839	-3.87	21.71	0.01
7	SLD 12	265	2	1839	-3.87	21.71	0.01
7	SLD 13	424	-1	2526	-0.58	28.46	0
7	SLD 14	424	-1	2526	-0.58	28.46	0
7	SLD 15	264	3	2076	-4.29	20.84	0.01
7	SLD 16	264	3	2076	-4.29	20.84	0.01
7	SLV 1	1417	-36	4204	24.57	79.7	-0.14
7	SLV 2	1417	-36	4204	24.57	79.7	-0.14
7	SLV 3	1043	-26	3148	15.81	61.88	-0.1
7	SLV 4	1043	-26	3148	15.81	61.88	-0.1
7	SLV 5	1420	-32	4760	23.69	77.95	-0.13
7	SLV 6	1420	-32	4760	23.69	77.95	-0.13
7	SLV 7	176	2	1243	-5.5	18.55	0.01
7	SLV 8	176	2	1243	-5.5	18.55	0.01
7	SLV 9	1049	-19	4182	14.19	58.63	-0.07
7	SLV 10	1049	-19	4182	14.19	58.63	-0.07
7	SLV 11	-195	16	665	-15	-0.76	0.06

Nodo	Cont.	Reazione a traslazione			Reazione a rotazione		
Ind.	N.br.	x	y	z	x	y	z
7	SLV 12	-195	16	665	-15	-0.76	0.06
7	SLV 13	181	9	2277	-7.12	15.31	0.04
7	SLV 14	181	9	2277	-7.12	15.31	0.04
7	SLV 15	-192	20	1222	-15.87	-2.51	0.08
7	SLV 16	-192	20	1222	-15.87	-2.51	0.08
8	SLU 1	433	-5	2955	2.69	7.63	-0.01
8	SLU 2	443	-3	2936	1.37	7.82	-0.01
8	SLU 3	441	-5	2995	2.75	7.79	-0.01
8	SLU 4	448	-4	2984	1.96	7.91	-0.01
8	SLU 5	450	-3	2969	1.43	7.92	-0.01
8	SLU 6	448	-5	3027	2.8	7.89	-0.01
8	SLU 7	454	-4	3017	2.01	8	-0.01
8	SLU 8	446	-5	3019	2.8	7.82	-0.01
8	SLU 9	452	-4	3008	2.01	7.94	-0.01
8	SLU 10	502	-4	3240	1.65	9.15	-0.01
8	SLU 11	500	-5	3298	3.02	9.12	-0.01
8	SLU 12	506	-4	3287	2.23	9.24	-0.01
8	SLU 13	509	-4	3272	1.7	9.25	-0.01
8	SLU 14	506	-6	3331	3.08	9.22	-0.01
8	SLU 15	513	-4	3320	2.29	9.33	-0.01
8	SLU 16	504	-6	3322	3.08	9.15	-0.01
8	SLU 17	511	-4	3311	2.29	9.27	-0.01
8	SLU 18	516	-6	3388	3.08	9.53	-0.01
8	SLU 19	523	-4	3377	2.29	9.65	-0.01
8	SLU 20	523	-6	3420	3.14	9.63	-0.01
8	SLU 21	529	-5	3409	2.35	9.74	-0.01
8	SLU 22	472	-5	3178	2.87	8.35	-0.01
8	SLU 23	483	-3	3160	1.55	8.55	-0.01
8	SLU 24	481	-5	3219	2.93	8.52	-0.01
8	SLU 25	487	-4	3208	2.14	8.63	-0.01
8	SLU 26	490	-3	3192	1.61	8.64	-0.01
8	SLU 27	487	-5	3251	2.99	8.61	-0.01
8	SLU 28	494	-4	3240	2.2	8.73	-0.01
8	SLU 29	485	-5	3243	2.98	8.54	-0.01
8	SLU 30	492	-4	3232	2.19	8.66	-0.01
8	SLU 31	542	-4	3463	1.83	9.88	-0.01
8	SLU 32	540	-6	3522	3.21	9.85	-0.01
8	SLU 33	546	-5	3511	2.42	9.96	-0.01
8	SLU 34	548	-4	3495	1.89	9.97	-0.01
8	SLU 35	546	-6	3554	3.26	9.94	-0.02
8	SLU 36	553	-5	3543	2.47	10.06	-0.01
8	SLU 37	544	-6	3546	3.26	9.87	-0.02
8	SLU 38	550	-5	3535	2.47	9.99	-0.01
8	SLU 39	556	-6	3611	3.27	10.25	-0.02
8	SLU 40	563	-5	3600	2.48	10.37	-0.01
8	SLU 41	563	-6	3643	3.32	10.35	-0.02
8	SLU 42	569	-5	3632	2.53	10.47	-0.01
8	SLU 43	549	-6	3765	3.43	9.67	-0.02
8	SLU 44	560	-4	3746	2.11	9.87	-0.01
8	SLU 45	557	-6	3805	3.49	9.83	-0.02
8	SLU 46	564	-5	3794	2.7	9.95	-0.01
8	SLU 47	566	-4	3779	2.17	9.96	-0.01
8	SLU 48	564	-6	3837	3.54	9.93	-0.02
8	SLU 49	570	-5	3826	2.75	10.05	-0.01
8	SLU 50	562	-6	3829	3.54	9.86	-0.02
8	SLU 51	568	-5	3818	2.75	9.98	-0.01
8	SLU 52	618	-5	4049	2.39	11.2	-0.01
8	SLU 53	616	-7	4108	3.77	11.16	-0.02
8	SLU 54	623	-6	4097	2.98	11.28	-0.01
8	SLU 55	625	-5	4082	2.45	11.29	-0.01
8	SLU 56	623	-7	4140	3.82	11.26	-0.02
8	SLU 57	629	-6	4129	3.03	11.38	-0.01
8	SLU 58	620	-7	4132	3.82	11.19	-0.02
8	SLU 59	627	-6	4121	3.03	11.31	-0.01
8	SLU 60	633	-7	4197	3.83	11.57	-0.02
8	SLU 61	639	-6	4187	3.04	11.69	-0.01
8	SLU 62	639	-7	4230	3.88	11.67	-0.02
8	SLU 63	646	-6	4219	3.09	11.78	-0.01
8	SLU 64	588	-6	3988	3.61	10.4	-0.02
8	SLU 65	599	-5	3970	2.3	10.59	-0.01
8	SLU 66	597	-7	4028	3.67	10.56	-0.02
8	SLU 67	604	-6	4017	2.88	10.67	-0.01
8	SLU 68	606	-5	4002	2.35	10.68	-0.01
8	SLU 69	604	-7	4061	3.73	10.65	-0.02
8	SLU 70	610	-6	4050	2.94	10.77	-0.01
8	SLU 71	601	-7	4053	3.72	10.59	-0.02
8	SLU 72	608	-6	4042	2.93	10.7	-0.01
8	SLU 73	658	-5	4273	2.57	11.92	-0.01
8	SLU 74	656	-7	4331	3.95	11.89	-0.02
8	SLU 75	662	-6	4321	3.16	12	-0.01
8	SLU 76	664	-5	4305	2.63	12.01	-0.01
8	SLU 77	662	-7	4364	4.01	11.98	-0.02
8	SLU 78	669	-6	4353	3.22	12.1	-0.01
8	SLU 79	660	-7	4356	4	11.92	-0.02
8	SLU 80	667	-6	4345	3.21	12.03	-0.01
8	SLU 81	672	-7	4421	4.01	12.29	-0.02
8	SLU 82	679	-6	4410	3.22	12.41	-0.01
8	SLU 83	679	-7	4453	4.07	12.39	-0.02
8	SLU 84	685	-6	4442	3.28	12.51	-0.02
8	SLE RA 1	444	-5	3019	2.74	7.84	-0.01
8	SLE RA 2	451	-4	3006	1.86	7.97	-0.01

Nodo	Cont.	Reazione a traslazione			Reazione a rotazione		
Ind.	N.br.	x	y	z	x	y	z
8	SLE RA 3	450	-5	3046	2.78	7.95	-0.01
8	SLE RA 4	454	-4	3038	2.25	8.02	-0.01
8	SLE RA 5	455	-4	3028	1.9	8.03	-0.01
8	SLE RA 6	454	-5	3067	2.82	8.01	-0.01
8	SLE RA 7	458	-4	3060	2.29	8.09	-0.01
8	SLE RA 8	453	-5	3062	2.81	7.96	-0.01
8	SLE RA 9	457	-4	3054	2.29	8.04	-0.01
8	SLE RA 10	490	-4	3208	2.05	8.85	-0.01
8	SLE RA 11	489	-5	3248	2.96	8.83	-0.01
8	SLE RA 12	493	-5	3240	2.44	8.91	-0.01
8	SLE RA 13	495	-4	3230	2.08	8.92	-0.01
8	SLE RA 14	493	-5	3269	3	8.9	-0.01
8	SLE RA 15	497	-5	3262	2.48	8.97	-0.01
8	SLE RA 16	492	-5	3264	3	8.85	-0.01
8	SLE RA 17	496	-5	3256	2.47	8.93	-0.01
8	SLE RA 18	500	-5	3307	3	9.1	-0.01
8	SLE RA 19	504	-5	3300	2.48	9.18	-0.01
8	SLE RA 20	504	-5	3329	3.04	9.17	-0.01
8	SLE RA 21	508	-5	3321	2.51	9.24	-0.01
8	SLE FR 1	444	-5	3019	2.74	7.84	-0.01
8	SLE FR 2	445	-5	3016	2.56	7.86	-0.01
8	SLE FR 3	446	-5	3027	2.75	7.86	-0.01
8	SLE FR 4	462	-5	3103	2.64	8.24	-0.01
8	SLE FR 5	462	-5	3114	2.83	8.24	-0.01
8	SLE FR 6	472	-5	3163	2.87	8.47	-0.01
8	SLE QP 1	444	-5	3019	2.74	7.84	-0.01
8	SLE QP 2	461	-5	3105	2.82	8.22	-0.01
8	SLD 1	787	-14	3820	10.04	22.59	-0.04
8	SLD 2	787	-14	3820	10.04	22.59	-0.04
8	SLD 3	619	-10	3264	6.71	16.02	-0.03
8	SLD 4	619	-10	3264	6.71	16.02	-0.03
8	SLD 5	813	-14	4162	10.03	22.49	-0.04
8	SLD 6	813	-14	4162	10.03	22.49	-0.04
8	SLD 7	253	0	2310	-1.06	0.59	0
8	SLD 8	253	0	2310	-1.06	0.59	0
8	SLD 9	668	-10	3900	6.69	15.84	-0.03
8	SLD 10	668	-10	3900	6.69	15.84	-0.03
8	SLD 11	108	4	2048	-4.39	-6.06	0.01
8	SLD 12	108	4	2048	-4.39	-6.06	0.01
8	SLD 13	303	0	2946	-1.08	0.42	0
8	SLD 14	303	0	2946	-1.08	0.42	0
8	SLD 15	135	4	2390	-4.41	-6.15	0.01
8	SLD 16	135	4	2390	-4.41	-6.15	0.01
8	SLV 1	1211	-27	4778	19.74	41.19	-0.07
8	SLV 2	1211	-27	4778	19.74	41.19	-0.07
8	SLV 3	819	-17	3475	11.9	25.8	-0.04
8	SLV 4	819	-17	3475	11.9	25.8	-0.04
8	SLV 5	1280	-26	5582	19.78	41.45	-0.08
8	SLV 6	1280	-26	5582	19.78	41.45	-0.08
8	SLV 7	-26	6	1241	-6.35	-9.85	0.02
8	SLV 8	-26	6	1241	-6.35	-9.85	0.02
8	SLV 9	948	-16	4970	11.98	26.28	-0.05
8	SLV 10	948	-16	4970	11.98	26.28	-0.05
8	SLV 11	-359	16	628	-14.15	-25.02	0.05
8	SLV 12	-359	16	628	-14.15	-25.02	0.05
8	SLV 13	102	7	2735	-6.26	-9.37	0.02
8	SLV 14	102	7	2735	-6.26	-9.37	0.02
8	SLV 15	-290	17	1432	-14.1	-24.76	0.05
8	SLV 16	-290	17	1432	-14.1	-24.76	0.05
9	SLU 1	557	3	3358	-0.21	30.18	0.01
9	SLU 2	574	5	3345	-1.23	31.11	0.01
9	SLU 3	568	3	3407	-0.21	30.77	0.01
9	SLU 4	578	4	3399	-0.82	31.33	0.01
9	SLU 5	583	5	3383	-1.22	31.62	0.01
9	SLU 6	577	3	3445	-0.2	31.28	0.01
9	SLU 7	588	4	3437	-0.81	31.84	0.01
9	SLU 8	575	3	3434	-0.19	31.19	0.01
9	SLU 9	585	4	3426	-0.8	31.75	0.01
9	SLU 10	645	5	3706	-1.3	34.74	0.01
9	SLU 11	640	4	3768	-0.28	34.4	0.01
9	SLU 12	650	5	3760	-0.9	34.96	0.01
9	SLU 13	655	5	3744	-1.3	35.25	0.01
9	SLU 14	649	4	3807	-0.28	34.91	0.01
9	SLU 15	659	5	3799	-0.89	35.47	0.01
9	SLU 16	647	4	3796	-0.27	34.82	0.01
9	SLU 17	657	5	3788	-0.88	35.38	0.01
9	SLU 18	659	4	3874	-0.32	35.37	0.01
9	SLU 19	669	5	3866	-0.93	35.93	0.01
9	SLU 20	668	4	3912	-0.31	35.87	0.01
9	SLU 21	678	5	3904	-0.92	36.43	0.01
9	SLU 22	607	4	3622	-0.28	32.84	0.01
9	SLU 23	624	5	3609	-1.3	33.77	0.01
9	SLU 24	618	4	3671	-0.28	33.43	0.01
9	SLU 25	629	5	3663	-0.89	33.99	0.01
9	SLU 26	633	5	3647	-1.29	34.27	0.01
9	SLU 27	627	4	3710	-0.27	33.93	0.01
9	SLU 28	638	5	3702	-0.88	34.49	0.01
9	SLU 29	625	4	3699	-0.27	33.85	0.01
9	SLU 30	636	5	3691	-0.88	34.41	0.01
9	SLU 31	696	6	3970	-1.38	37.4	0.01
9	SLU 32	690	4	4033	-0.36	37.06	0.01

Nodo	Cont.	Reazione a traslazione			Reazione a rotazione		
Ind.	N.br.	x	y	z	x	y	z
9	SLU 33	700	5	4025	-0.97	37.62	0.01
9	SLU 34	705	6	4008	-1.37	37.9	0.01
9	SLU 35	699	4	4071	-0.35	37.56	0.01
9	SLU 36	709	5	4063	-0.96	38.12	0.01
9	SLU 37	697	4	4060	-0.34	37.48	0.01
9	SLU 38	707	5	4052	-0.95	38.04	0.01
9	SLU 39	709	4	4139	-0.39	38.02	0.01
9	SLU 40	719	5	4131	-1	38.58	0.01
9	SLU 41	718	4	4177	-0.38	38.53	0.01
9	SLU 42	729	5	4169	-1	39.09	0.01
9	SLU 43	707	4	4275	-0.25	38.33	0.01
9	SLU 44	724	6	4261	-1.26	39.26	0.01
9	SLU 45	718	4	4324	-0.24	38.92	0.01
9	SLU 46	728	5	4316	-0.86	39.48	0.01
9	SLU 47	733	6	4300	-1.25	39.76	0.01
9	SLU 48	727	4	4362	-0.24	39.42	0.01
9	SLU 49	737	5	4354	-0.85	39.98	0.01
9	SLU 50	725	4	4351	-0.23	39.33	0.01
9	SLU 51	735	5	4343	-0.84	39.89	0.01
9	SLU 52	795	6	4623	-1.34	42.89	0.01
9	SLU 53	790	5	4685	-0.32	42.55	0.01
9	SLU 54	800	6	4677	-0.93	43.11	0.01
9	SLU 55	804	6	4661	-1.33	43.39	0.01
9	SLU 56	799	5	4723	-0.31	43.05	0.01
9	SLU 57	809	6	4715	-0.92	43.61	0.01
9	SLU 58	797	5	4713	-0.31	42.96	0.01
9	SLU 59	807	6	4704	-0.92	43.52	0.01
9	SLU 60	809	5	4791	-0.36	43.51	0.01
9	SLU 61	819	6	4783	-0.97	44.07	0.01
9	SLU 62	818	5	4829	-0.35	44.01	0.01
9	SLU 63	828	6	4821	-0.96	44.57	0.01
9	SLU 64	757	5	4539	-0.32	40.98	0.01
9	SLU 65	774	6	4526	-1.34	41.91	0.01
9	SLU 66	768	5	4588	-0.32	41.57	0.01
9	SLU 67	778	6	4580	-0.93	42.13	0.01
9	SLU 68	783	6	4564	-1.33	42.42	0.01
9	SLU 69	777	5	4626	-0.31	42.08	0.01
9	SLU 70	788	6	4618	-0.92	42.64	0.01
9	SLU 71	775	5	4616	-0.3	41.99	0.01
9	SLU 72	785	6	4607	-0.91	42.55	0.01
9	SLU 73	846	7	4887	-1.41	45.54	0.01
9	SLU 74	840	5	4950	-0.4	45.2	0.01
9	SLU 75	850	6	4942	-1.01	45.76	0.01
9	SLU 76	855	7	4925	-1.41	46.05	0.01
9	SLU 77	849	5	4988	-0.39	45.71	0.01
9	SLU 78	859	6	4980	-1	46.27	0.01
9	SLU 79	847	5	4977	-0.38	45.62	0.01
9	SLU 80	857	6	4969	-0.99	46.18	0.01
9	SLU 81	859	5	5055	-0.43	46.17	0.01
9	SLU 82	869	6	5047	-1.04	46.73	0.01
9	SLU 83	868	5	5094	-0.42	46.67	0.01
9	SLU 84	878	6	5086	-1.03	47.23	0.01
9	SLE RA 1	571	3	3434	-0.23	30.94	0.01
9	SLE RA 2	583	5	3425	-0.91	31.56	0.01
9	SLE RA 3	579	3	3466	-0.23	31.33	0.01
9	SLE RA 4	586	4	3461	-0.64	31.71	0.01
9	SLE RA 5	589	5	3450	-0.9	31.9	0.01
9	SLE RA 6	585	4	3492	-0.22	31.67	0.01
9	SLE RA 7	592	4	3486	-0.63	32.04	0.01
9	SLE RA 8	583	3	3484	-0.22	31.61	0.01
9	SLE RA 9	590	4	3479	-0.63	31.99	0.01
9	SLE RA 10	630	5	3666	-0.96	33.98	0.01
9	SLE RA 11	626	4	3707	-0.28	33.75	0.01
9	SLE RA 12	633	4	3702	-0.69	34.13	0.01
9	SLE RA 13	636	5	3691	-0.95	34.32	0.01
9	SLE RA 14	633	4	3733	-0.27	34.09	0.01
9	SLE RA 15	639	4	3727	-0.68	34.46	0.01
9	SLE RA 16	631	4	3725	-0.27	34.03	0.01
9	SLE RA 17	638	4	3720	-0.68	34.41	0.01
9	SLE RA 18	639	4	3778	-0.3	34.4	0.01
9	SLE RA 19	646	5	3772	-0.71	34.77	0.01
9	SLE RA 20	645	4	3803	-0.3	34.73	0.01
9	SLE RA 21	652	5	3798	-0.7	35.11	0.01
9	SLE FR 1	571	3	3434	-0.23	30.94	0.01
9	SLE FR 2	574	4	3432	-0.37	31.06	0.01
9	SLE FR 3	574	3	3444	-0.23	31.07	0.01
9	SLE FR 4	594	4	3535	-0.39	32.1	0.01
9	SLE FR 5	594	4	3547	-0.25	32.11	0.01
9	SLE FR 6	605	4	3606	-0.27	32.67	0.01
9	SLE QP 1	571	3	3434	-0.23	30.94	0.01
9	SLE QP 2	592	4	3537	-0.25	31.98	0.01
9	SLD 1	928	2	4361	1.81	48.16	0
9	SLD 2	928	2	4361	1.81	48.16	0
9	SLD 3	744	-1	3658	4.42	40.55	0
9	SLD 4	744	-1	3658	4.42	40.55	0
9	SLD 5	971	8	4851	-3.58	48.38	0.02
9	SLD 6	971	8	4851	-3.58	48.38	0.02
9	SLD 7	359	-3	2506	5.1	23.01	0
9	SLD 8	359	-3	2506	5.1	23.01	0
9	SLD 9	825	10	4568	-5.6	40.95	0.02
9	SLD 10	825	10	4568	-5.6	40.95	0.02

Nodo	Cont.	Reazione a traslazione			Reazione a rotazione		
Ind.	N.br.	x	y	z	x	y	z
9	SLD 11	212	-1	2223	3.08	15.58	0
9	SLD 12	212	-1	2223	3.08	15.58	0
9	SLD 13	439	9	3416	-4.92	23.4	0.02
9	SLD 14	439	9	3416	-4.92	23.4	0.02
9	SLD 15	255	5	2713	-2.32	15.79	0.01
9	SLD 16	255	5	2713	-2.32	15.79	0.01
9	SLV 1	1366	0	5461	4.57	69.29	0
9	SLV 2	1366	0	5461	4.57	69.29	0
9	SLV 3	938	-8	3813	10.68	51.55	-0.01
9	SLV 4	938	-8	3813	10.68	51.55	-0.01
9	SLV 5	1473	15	6613	-8.07	70.08	0.03
9	SLV 6	1473	15	6613	-8.07	70.08	0.03
9	SLV 7	47	-12	1120	12.3	10.94	-0.02
9	SLV 8	47	-12	1120	12.3	10.94	-0.02
9	SLV 9	1137	19	5953	-12.8	53.02	0.04
9	SLV 10	1137	19	5953	-12.8	53.02	0.04
9	SLV 11	-289	-7	460	7.57	-6.13	-0.01
9	SLV 12	-289	-7	460	7.57	-6.13	-0.01
9	SLV 13	245	15	3261	-11.18	12.4	0.03
9	SLV 14	245	15	3261	-11.18	12.4	0.03
9	SLV 15	-182	7	1613	-5.07	-5.34	0.02
9	SLV 16	-182	7	1613	-5.07	-5.34	0.02
10	SLU 1	367	16	3434	-3.11	8.55	0.04
10	SLU 2	381	16	3430	-3.59	9.05	0.04
10	SLU 3	375	16	3488	-3.17	8.76	0.04
10	SLU 4	383	16	3485	-3.46	9.06	0.04
10	SLU 5	387	17	3471	-3.63	9.21	0.04
10	SLU 6	381	16	3529	-3.21	8.91	0.04
10	SLU 7	389	17	3526	-3.5	9.21	0.04
10	SLU 8	379	16	3517	-3.19	8.86	0.04
10	SLU 9	388	17	3514	-3.48	9.16	0.04
10	SLU 10	432	19	3817	-4.04	10.42	0.04
10	SLU 11	426	18	3875	-3.62	10.13	0.05
10	SLU 12	434	19	3872	-3.91	10.43	0.05
10	SLU 13	438	19	3858	-4.08	10.58	0.05
10	SLU 14	432	18	3916	-3.66	10.28	0.05
10	SLU 15	440	19	3914	-3.95	10.58	0.05
10	SLU 16	430	18	3904	-3.64	10.23	0.05
10	SLU 17	439	19	3901	-3.93	10.53	0.05
10	SLU 18	440	19	3988	-3.75	10.51	0.05
10	SLU 19	448	19	3985	-4.04	10.81	0.05
10	SLU 20	446	19	4029	-3.79	10.66	0.05
10	SLU 21	454	19	4026	-4.08	10.96	0.05
10	SLU 22	401	17	3717	-3.45	9.35	0.05
10	SLU 23	415	18	3712	-3.93	9.85	0.04
10	SLU 24	409	17	3770	-3.51	9.56	0.05
10	SLU 25	417	18	3767	-3.8	9.86	0.04
10	SLU 26	421	18	3753	-3.97	10.01	0.04
10	SLU 27	415	18	3811	-3.55	9.71	0.05
10	SLU 28	424	18	3809	-3.84	10.01	0.05
10	SLU 29	413	18	3799	-3.53	9.66	0.05
10	SLU 30	422	18	3796	-3.82	9.96	0.05
10	SLU 31	466	20	4099	-4.38	11.22	0.05
10	SLU 32	460	20	4158	-3.96	10.93	0.05
10	SLU 33	468	20	4155	-4.25	11.23	0.05
10	SLU 34	472	20	4140	-4.42	11.38	0.05
10	SLU 35	466	20	4199	-4	11.08	0.05
10	SLU 36	475	20	4196	-4.29	11.38	0.05
10	SLU 37	464	20	4186	-3.98	11.03	0.05
10	SLU 38	473	20	4183	-4.27	11.33	0.05
10	SLU 39	474	20	4270	-4.09	11.31	0.05
10	SLU 40	482	21	4267	-4.38	11.61	0.05
10	SLU 41	480	20	4311	-4.13	11.46	0.05
10	SLU 42	489	21	4308	-4.42	11.76	0.05
10	SLU 43	465	20	4368	-3.92	10.84	0.05
10	SLU 44	479	21	4363	-4.4	11.35	0.05
10	SLU 45	473	20	4422	-3.98	11.05	0.05
10	SLU 46	481	21	4419	-4.27	11.35	0.05
10	SLU 47	485	21	4404	-4.44	11.5	0.05
10	SLU 48	479	20	4463	-4.02	11.2	0.05
10	SLU 49	488	21	4460	-4.31	11.5	0.05
10	SLU 50	478	20	4450	-4.01	11.15	0.05
10	SLU 51	486	21	4447	-4.29	11.45	0.05
10	SLU 52	530	23	4750	-4.85	12.72	0.06
10	SLU 53	524	22	4809	-4.43	12.42	0.06
10	SLU 54	532	23	4806	-4.72	12.72	0.06
10	SLU 55	536	23	4792	-4.89	12.87	0.06
10	SLU 56	530	22	4850	-4.47	12.57	0.06
10	SLU 57	539	23	4847	-4.76	12.87	0.06
10	SLU 58	529	22	4837	-4.45	12.52	0.06
10	SLU 59	537	23	4835	-4.74	12.82	0.06
10	SLU 60	538	23	4921	-4.56	12.8	0.06
10	SLU 61	546	23	4918	-4.85	13.1	0.06
10	SLU 62	544	23	4962	-4.61	12.95	0.06
10	SLU 63	553	24	4959	-4.89	13.25	0.06
10	SLU 64	499	21	4650	-4.26	11.64	0.06
10	SLU 65	513	22	4646	-4.74	12.15	0.05
10	SLU 66	507	22	4704	-4.32	11.85	0.06
10	SLU 67	516	22	4701	-4.61	12.15	0.06
10	SLU 68	519	22	4687	-4.78	12.3	0.05
10	SLU 69	513	22	4745	-4.36	12	0.06

Nodo	Cont.	Reazione a traslazione			Reazione a rotazione		
Ind.	N.br.	x	y	z	x	y	z
10	SLU 70	522	22	4742	-4.65	12.3	0.06
10	SLU 71	512	22	4733	-4.35	11.95	0.06
10	SLU 72	520	22	4730	-4.63	12.25	0.06
10	SLU 73	564	24	5033	-5.19	13.52	0.06
10	SLU 74	558	24	5091	-4.77	13.22	0.06
10	SLU 75	567	24	5088	-5.06	13.52	0.06
10	SLU 76	571	25	5074	-5.23	13.67	0.06
10	SLU 77	564	24	5132	-4.81	13.37	0.06
10	SLU 78	573	24	5129	-5.1	13.67	0.06
10	SLU 79	563	24	5120	-4.79	13.32	0.06
10	SLU 80	571	24	5117	-5.08	13.62	0.06
10	SLU 81	572	24	5203	-4.9	13.6	0.06
10	SLU 82	580	25	5201	-5.19	13.9	0.06
10	SLU 83	578	25	5245	-4.95	13.75	0.06
10	SLU 84	587	25	5242	-5.23	14.05	0.06
10	SLE RA 1	376	16	3515	-3.2	8.78	0.04
10	SLE RA 2	386	17	3512	-3.52	9.12	0.04
10	SLE RA 3	382	16	3551	-3.24	8.92	0.04
10	SLE RA 4	387	17	3549	-3.44	9.12	0.04
10	SLE RA 5	390	17	3539	-3.55	9.22	0.04
10	SLE RA 6	386	16	3578	-3.27	9.02	0.04
10	SLE RA 7	392	17	3576	-3.46	9.22	0.04
10	SLE RA 8	385	16	3570	-3.26	8.98	0.04
10	SLE RA 9	390	17	3568	-3.45	9.18	0.04
10	SLE RA 10	420	18	3770	-3.82	10.03	0.04
10	SLE RA 11	416	18	3809	-3.54	9.83	0.05
10	SLE RA 12	421	18	3807	-3.74	10.03	0.05
10	SLE RA 13	424	18	3797	-3.85	10.13	0.05
10	SLE RA 14	420	18	3836	-3.57	9.93	0.05
10	SLE RA 15	426	18	3834	-3.76	10.13	0.05
10	SLE RA 16	419	18	3828	-3.56	9.9	0.05
10	SLE RA 17	424	18	3826	-3.75	10.1	0.05
10	SLE RA 18	425	18	3884	-3.63	10.09	0.05
10	SLE RA 19	431	18	3882	-3.82	10.29	0.05
10	SLE RA 20	429	18	3911	-3.66	10.19	0.05
10	SLE RA 21	435	19	3909	-3.85	10.39	0.05
10	SLE FR 1	376	16	3515	-3.2	8.78	0.04
10	SLE FR 2	378	16	3514	-3.27	8.85	0.04
10	SLE FR 3	378	16	3526	-3.21	8.82	0.04
10	SLE FR 4	393	17	3625	-3.4	9.24	0.04
10	SLE FR 5	393	17	3637	-3.34	9.21	0.04
10	SLE FR 6	401	17	3699	-3.42	9.43	0.04
10	SLE QP 1	376	16	3515	-3.2	8.78	0.04
10	SLE QP 2	391	17	3626	-3.33	9.17	0.04
10	SLD 1	685	15	3551	-3.08	22.76	0.05
10	SLD 2	685	15	3551	-3.08	22.76	0.05
10	SLD 3	520	11	2739	-1.17	16.5	0.03
10	SLD 4	520	11	2739	-1.17	16.5	0.03
10	SLD 5	730	23	4835	-6.16	22.75	0.07
10	SLD 6	730	23	4835	-6.16	22.75	0.07
10	SLD 7	179	8	2128	0.23	1.87	0.01
10	SLD 8	179	8	2128	0.23	1.87	0.01
10	SLD 9	603	25	5124	-6.89	16.47	0.08
10	SLD 10	603	25	5124	-6.89	16.47	0.08
10	SLD 11	52	10	2416	-0.5	-4.41	0.02
10	SLD 12	52	10	2416	-0.5	-4.41	0.02
10	SLD 13	262	22	4513	-5.5	1.84	0.06
10	SLD 14	262	22	4513	-5.5	1.84	0.06
10	SLD 15	97	18	3701	-3.58	-4.42	0.04
10	SLD 16	97	18	3701	-3.58	-4.42	0.04
10	SLV 1	1067	14	3462	-2.77	40.3	0.05
10	SLV 2	1067	14	3462	-2.77	40.3	0.05
10	SLV 3	682	3	1562	1.71	25.7	0.01
10	SLV 4	682	3	1562	1.71	25.7	0.01
10	SLV 5	1178	32	6459	-9.95	40.66	0.11
10	SLV 6	1178	32	6459	-9.95	40.66	0.11
10	SLV 7	-106	-4	125	4.97	-8.01	-0.03
10	SLV 8	-106	-4	125	4.97	-8.01	-0.03
10	SLV 9	888	37	7127	-11.63	26.36	0.12
10	SLV 10	888	37	7127	-11.63	26.36	0.12
10	SLV 11	-396	1	793	3.29	-22.31	-0.02
10	SLV 12	-396	1	793	3.29	-22.31	-0.02
10	SLV 13	100	30	5690	-8.37	-7.36	0.08
10	SLV 14	100	30	5690	-8.37	-7.36	0.08
10	SLV 15	-285	19	3790	-3.89	-21.96	0.04
10	SLV 16	-285	19	3790	-3.89	-21.96	0.04
11	SLU 1	70	801	5501	-23.18	8.95	0.43
11	SLU 2	85	801	5506	-23.09	9.72	0.43
11	SLU 3	72	817	5593	-23.71	9.15	0.44
11	SLU 4	81	817	5596	-23.66	9.61	0.44
11	SLU 5	88	813	5576	-23.46	9.91	0.44
11	SLU 6	74	829	5663	-24.09	9.35	0.45
11	SLU 7	83	829	5666	-24.03	9.8	0.45
11	SLU 8	74	825	5640	-23.93	9.35	0.44
11	SLU 9	83	825	5643	-23.88	9.8	0.44
11	SLU 10	94	912	6160	-26.68	10.75	0.49
11	SLU 11	80	929	6248	-27.3	10.18	0.5
11	SLU 12	90	929	6251	-27.24	10.64	0.5
11	SLU 13	96	924	6230	-27.05	10.95	0.5
11	SLU 14	83	941	6317	-27.67	10.38	0.5
11	SLU 15	92	941	6320	-27.62	10.84	0.5

Nodo	Cont.	Reazione a traslazione			Reazione a rotazione		
Ind.	N.br.	x	y	z	x	y	z
11	SLU 16	83	936	6295	-27.52	10.38	0.5
11	SLU 17	92	936	6298	-27.46	10.84	0.5
11	SLU 18	82	960	6436	-28.31	10.43	0.51
11	SLU 19	92	960	6439	-28.25	10.89	0.51
11	SLU 20	84	972	6505	-28.68	10.63	0.52
11	SLU 21	94	972	6508	-28.63	11.09	0.52
11	SLU 22	73	883	5977	-25.81	9.63	0.47
11	SLU 23	89	883	5982	-25.72	10.39	0.47
11	SLU 24	75	900	6069	-26.34	9.83	0.48
11	SLU 25	84	900	6072	-26.29	10.28	0.48
11	SLU 26	91	895	6052	-26.1	10.59	0.48
11	SLU 27	77	912	6139	-26.72	10.02	0.49
11	SLU 28	87	912	6142	-26.66	10.48	0.49
11	SLU 29	77	907	6117	-26.56	10.02	0.49
11	SLU 30	87	907	6120	-26.51	10.48	0.49
11	SLU 31	97	995	6636	-29.31	11.43	0.53
11	SLU 32	84	1011	6724	-29.93	10.86	0.54
11	SLU 33	93	1011	6727	-29.88	11.32	0.54
11	SLU 34	100	1007	6706	-29.68	11.62	0.54
11	SLU 35	86	1023	6793	-30.31	11.06	0.55
11	SLU 36	95	1023	6796	-30.25	11.51	0.55
11	SLU 37	86	1019	6771	-30.15	11.06	0.55
11	SLU 38	96	1019	6774	-30.1	11.51	0.55
11	SLU 39	86	1042	6912	-30.94	11.11	0.56
11	SLU 40	95	1042	6915	-30.88	11.56	0.56
11	SLU 41	88	1054	6982	-31.31	11.3	0.57
11	SLU 42	97	1055	6985	-31.26	11.76	0.57
11	SLU 43	90	1012	6988	-29.23	11.41	0.54
11	SLU 44	105	1013	6993	-29.14	12.17	0.54
11	SLU 45	91	1029	7080	-29.76	11.6	0.55
11	SLU 46	101	1029	7083	-29.71	12.06	0.55
11	SLU 47	107	1025	7063	-29.52	12.37	0.55
11	SLU 48	94	1041	7150	-30.14	11.8	0.56
11	SLU 49	103	1041	7153	-30.08	12.26	0.56
11	SLU 50	94	1037	7127	-29.98	11.8	0.56
11	SLU 51	103	1037	7130	-29.93	12.26	0.56
11	SLU 52	114	1124	7647	-32.73	13.21	0.6
11	SLU 53	100	1140	7735	-33.35	12.64	0.61
11	SLU 54	110	1141	7738	-33.29	13.1	0.61
11	SLU 55	116	1136	7717	-33.1	13.4	0.61
11	SLU 56	102	1152	7804	-33.72	12.83	0.62
11	SLU 57	112	1153	7807	-33.67	13.29	0.62
11	SLU 58	103	1148	7782	-33.57	12.83	0.62
11	SLU 59	112	1148	7785	-33.52	13.29	0.62
11	SLU 60	102	1172	7923	-34.36	12.89	0.63
11	SLU 61	111	1172	7926	-34.3	13.34	0.63
11	SLU 62	104	1184	7992	-34.73	13.08	0.63
11	SLU 63	114	1184	7995	-34.68	13.54	0.64
11	SLU 64	93	1095	7464	-31.87	12.08	0.59
11	SLU 65	108	1095	7469	-31.77	12.85	0.59
11	SLU 66	95	1111	7556	-32.4	12.28	0.6
11	SLU 67	104	1112	7559	-32.34	12.74	0.6
11	SLU 68	111	1107	7539	-32.15	13.04	0.6
11	SLU 69	97	1124	7626	-32.77	12.48	0.6
11	SLU 70	106	1124	7629	-32.72	12.93	0.6
11	SLU 71	97	1119	7604	-32.62	12.48	0.6
11	SLU 72	107	1119	7607	-32.56	12.93	0.6
11	SLU 73	117	1207	8123	-35.36	13.88	0.65
11	SLU 74	104	1223	8211	-35.98	13.31	0.66
11	SLU 75	113	1223	8214	-35.93	13.77	0.66
11	SLU 76	119	1219	8193	-35.74	14.08	0.65
11	SLU 77	106	1235	8280	-36.36	13.51	0.66
11	SLU 78	115	1235	8283	-36.3	13.97	0.66
11	SLU 79	106	1231	8258	-36.2	13.51	0.66
11	SLU 80	115	1231	8261	-36.15	13.97	0.66
11	SLU 81	105	1254	8399	-36.99	13.56	0.67
11	SLU 82	115	1254	8402	-36.93	14.02	0.67
11	SLU 83	108	1266	8469	-37.37	13.76	0.68
11	SLU 84	117	1266	8472	-37.31	14.22	0.68
11	SLE RA 1	71	824	5637	-23.93	9.15	0.44
11	SLE RA 2	81	824	5640	-23.87	9.66	0.44
11	SLE RA 3	72	835	5699	-24.29	9.28	0.45
11	SLE RA 4	78	835	5700	-24.25	9.58	0.45
11	SLE RA 5	83	832	5687	-24.12	9.79	0.45
11	SLE RA 6	73	843	5745	-24.54	9.41	0.45
11	SLE RA 7	80	843	5747	-24.5	9.71	0.45
11	SLE RA 8	74	840	5730	-24.43	9.41	0.45
11	SLE RA 9	80	840	5732	-24.4	9.71	0.45
11	SLE RA 10	87	899	6076	-26.26	10.35	0.48
11	SLE RA 11	78	909	6135	-26.68	9.97	0.49
11	SLE RA 12	84	910	6137	-26.64	10.27	0.49
11	SLE RA 13	88	907	6123	-26.51	10.48	0.49
11	SLE RA 14	79	917	6181	-26.93	10.1	0.49
11	SLE RA 15	86	918	6183	-26.89	10.4	0.49
11	SLE RA 16	79	915	6166	-26.83	10.1	0.49
11	SLE RA 17	86	915	6168	-26.79	10.4	0.49
11	SLE RA 18	79	930	6260	-27.35	10.13	0.5
11	SLE RA 19	85	930	6262	-27.31	10.44	0.5
11	SLE RA 20	81	938	6307	-27.6	10.26	0.5
11	SLE RA 21	87	938	6309	-27.56	10.57	0.5
11	SLE FR 1	71	824	5637	-23.93	9.15	0.44

Nodo	Cont.	Reazione a traslazione			Reazione a rotazione		
Ind.	N.br.	x	y	z	x	y	z
11	SLE FR 2	73	824	5638	-23.92	9.25	0.44
11	SLE FR 3	71	827	5656	-24.03	9.2	0.44
11	SLE FR 4	75	856	5825	-24.95	9.54	0.46
11	SLE FR 5	74	859	5843	-25.06	9.49	0.46
11	SLE FR 6	75	877	5949	-25.64	9.64	0.47
11	SLE QP 1	71	824	5637	-23.93	9.15	0.44
11	SLE QP 2	73	856	5824	-24.96	9.44	0.46
11	SLD 1	386	860	5788	-25.45	24.28	0.43
11	SLD 2	386	860	5788	-25.45	24.28	0.43
11	SLD 3	344	558	4333	-12.94	21.62	0.27
11	SLD 4	344	558	4333	-12.94	21.62	0.27
11	SLD 5	231	1315	8020	-44.08	17.92	0.69
11	SLD 6	231	1315	8020	-44.08	17.92	0.69
11	SLD 7	91	309	3170	-2.38	9.07	0.17
11	SLD 8	91	309	3170	-2.38	9.07	0.17
11	SLD 9	56	1403	8478	-47.54	9.82	0.75
11	SLD 10	56	1403	8478	-47.54	9.82	0.75
11	SLD 11	-85	397	3628	-5.84	0.96	0.23
11	SLD 12	-85	397	3628	-5.84	0.96	0.23
11	SLD 13	-198	1154	7315	-36.98	-2.74	0.65
11	SLD 14	-198	1154	7315	-36.98	-2.74	0.65
11	SLD 15	-240	852	5860	-24.47	-5.39	0.49
11	SLD 16	-240	852	5860	-24.47	-5.39	0.49
11	SLV 1	788	871	5763	-26.32	43.38	0.38
11	SLV 2	788	871	5763	-26.32	43.38	0.38
11	SLV 3	688	167	2362	2.85	37.09	0.02
11	SLV 4	688	167	2362	2.85	37.09	0.02
11	SLV 5	440	1929	10964	-69.62	29.16	0.99
11	SLV 6	440	1929	10964	-69.62	29.16	0.99
11	SLV 7	105	-419	-373	27.64	8.2	-0.23
11	SLV 8	105	-419	-373	27.64	8.2	-0.23
11	SLV 9	41	2131	12021	-77.55	10.68	1.15
11	SLV 10	41	2131	12021	-77.55	10.68	1.15
11	SLV 11	-293	-217	684	19.7	-10.27	-0.07
11	SLV 12	-293	-217	684	19.7	-10.27	-0.07
11	SLV 13	-541	1545	9286	-52.77	-18.21	0.9
11	SLV 14	-541	1545	9286	-52.77	-18.21	0.9
11	SLV 15	-642	840	5885	-23.59	-24.49	0.54
11	SLV 16	-642	840	5885	-23.59	-24.49	0.54
12	SLU 1	-291	14	4131	-2.13	-11.64	-0.04
12	SLU 2	-276	14	4145	-1.2	-11.12	-0.04
12	SLU 3	-296	15	4196	-2.19	-11.85	-0.04
12	SLU 4	-287	14	4205	-1.63	-11.54	-0.04
12	SLU 5	-279	14	4195	-1.24	-11.25	-0.04
12	SLU 6	-299	15	4246	-2.23	-11.98	-0.04
12	SLU 7	-290	14	4254	-1.67	-11.67	-0.04
12	SLU 8	-297	15	4231	-2.21	-11.9	-0.04
12	SLU 9	-288	14	4239	-1.66	-11.59	-0.04
12	SLU 10	-314	16	4617	-1.54	-12.56	-0.05
12	SLU 11	-334	17	4668	-2.53	-13.29	-0.05
12	SLU 12	-325	16	4676	-1.97	-12.97	-0.05
12	SLU 13	-317	16	4666	-1.58	-12.69	-0.05
12	SLU 14	-337	17	4717	-2.57	-13.42	-0.05
12	SLU 15	-328	16	4726	-2.01	-13.1	-0.05
12	SLU 16	-335	17	4702	-2.55	-13.34	-0.05
12	SLU 17	-326	16	4710	-2	-13.03	-0.05
12	SLU 18	-345	17	4805	-2.61	-13.7	-0.05
12	SLU 19	-336	17	4813	-2.06	-13.39	-0.05
12	SLU 20	-348	17	4855	-2.66	-13.83	-0.05
12	SLU 21	-339	17	4863	-2.1	-13.52	-0.05
12	SLU 22	-323	16	4469	-2.36	-12.91	-0.05
12	SLU 23	-308	15	4483	-1.43	-12.39	-0.05
12	SLU 24	-328	16	4534	-2.42	-13.12	-0.05
12	SLU 25	-319	16	4543	-1.86	-12.8	-0.05
12	SLU 26	-311	15	4533	-1.48	-12.52	-0.05
12	SLU 27	-331	16	4584	-2.46	-13.25	-0.05
12	SLU 28	-322	16	4592	-1.91	-12.93	-0.05
12	SLU 29	-329	16	4569	-2.45	-13.17	-0.05
12	SLU 30	-320	16	4577	-1.89	-12.86	-0.05
12	SLU 31	-346	17	4955	-1.77	-13.83	-0.05
12	SLU 32	-366	18	5006	-2.76	-14.55	-0.05
12	SLU 33	-357	18	5014	-2.2	-14.24	-0.05
12	SLU 34	-349	17	5004	-1.82	-13.96	-0.05
12	SLU 35	-369	18	5055	-2.8	-14.68	-0.05
12	SLU 36	-360	18	5064	-2.25	-14.37	-0.05
12	SLU 37	-367	18	5040	-2.79	-14.61	-0.05
12	SLU 38	-358	18	5048	-2.23	-14.3	-0.05
12	SLU 39	-377	19	5143	-2.84	-14.96	-0.06
12	SLU 40	-368	18	5151	-2.29	-14.65	-0.06
12	SLU 41	-380	19	5193	-2.89	-15.09	-0.06
12	SLU 42	-371	18	5201	-2.33	-14.78	-0.06
12	SLU 43	-367	18	5255	-2.69	-14.7	-0.05
12	SLU 44	-352	17	5269	-1.76	-14.18	-0.05
12	SLU 45	-372	18	5320	-2.75	-14.91	-0.05
12	SLU 46	-363	18	5328	-2.19	-14.6	-0.05
12	SLU 47	-355	18	5318	-1.8	-14.31	-0.05
12	SLU 48	-375	19	5370	-2.79	-15.04	-0.05
12	SLU 49	-366	18	5378	-2.23	-14.73	-0.05
12	SLU 50	-373	19	5354	-2.77	-14.96	-0.05
12	SLU 51	-364	18	5362	-2.22	-14.65	-0.05
12	SLU 52	-390	19	5740	-2.1	-15.62	-0.06

Nodo	Cont.	Reazione a traslazione			Reazione a rotazione		
Ind.	N.br.	x	y	z	x	y	z
12	SLU 53	-410	20	5791	-3.08	-16.35	-0.06
12	SLU 54	-401	20	5800	-2.53	-16.03	-0.06
12	SLU 55	-393	20	5790	-2.14	-15.75	-0.06
12	SLU 56	-413	21	5841	-3.13	-16.48	-0.06
12	SLU 57	-404	20	5849	-2.57	-16.16	-0.06
12	SLU 58	-411	21	5826	-3.11	-16.4	-0.06
12	SLU 59	-402	20	5834	-2.56	-16.09	-0.06
12	SLU 60	-421	21	5929	-3.17	-16.76	-0.06
12	SLU 61	-412	20	5937	-2.61	-16.44	-0.06
12	SLU 62	-424	21	5978	-3.21	-16.89	-0.06
12	SLU 63	-415	21	5986	-2.66	-16.57	-0.06
12	SLU 64	-399	20	5593	-2.92	-15.97	-0.06
12	SLU 65	-384	19	5607	-1.99	-15.45	-0.06
12	SLU 66	-404	20	5658	-2.98	-16.17	-0.06
12	SLU 67	-395	19	5666	-2.42	-15.86	-0.06
12	SLU 68	-387	19	5656	-2.04	-15.58	-0.06
12	SLU 69	-407	20	5707	-3.02	-16.3	-0.06
12	SLU 70	-398	20	5716	-2.47	-15.99	-0.06
12	SLU 71	-405	20	5692	-3.01	-16.23	-0.06
12	SLU 72	-396	20	5700	-2.45	-15.92	-0.06
12	SLU 73	-422	21	6078	-2.33	-16.89	-0.06
12	SLU 74	-442	22	6129	-3.32	-17.61	-0.06
12	SLU 75	-433	21	6138	-2.76	-17.3	-0.07
12	SLU 76	-425	21	6128	-2.37	-17.02	-0.06
12	SLU 77	-445	22	6179	-3.36	-17.74	-0.07
12	SLU 78	-436	22	6187	-2.8	-17.43	-0.07
12	SLU 79	-443	22	6164	-3.34	-17.67	-0.07
12	SLU 80	-434	22	6172	-2.79	-17.35	-0.07
12	SLU 81	-453	22	6267	-3.4	-18.02	-0.07
12	SLU 82	-445	22	6275	-2.85	-17.71	-0.07
12	SLU 83	-457	23	6316	-3.45	-18.15	-0.07
12	SLU 84	-448	22	6324	-2.89	-17.84	-0.07
12	SLE RA 1	-300	15	4228	-2.19	-12.01	-0.04
12	SLE RA 2	-290	14	4237	-1.58	-11.66	-0.04
12	SLE RA 3	-303	15	4271	-2.23	-12.14	-0.04
12	SLE RA 4	-297	15	4277	-1.86	-11.93	-0.04
12	SLE RA 5	-292	14	4270	-1.61	-11.75	-0.04
12	SLE RA 6	-305	15	4304	-2.26	-12.23	-0.04
12	SLE RA 7	-299	15	4310	-1.89	-12.02	-0.04
12	SLE RA 8	-304	15	4294	-2.25	-12.18	-0.04
12	SLE RA 9	-298	15	4300	-1.88	-11.97	-0.04
12	SLE RA 10	-315	16	4552	-1.8	-12.62	-0.05
12	SLE RA 11	-329	16	4586	-2.46	-13.1	-0.05
12	SLE RA 12	-323	16	4591	-2.09	-12.89	-0.05
12	SLE RA 13	-317	16	4585	-1.83	-12.7	-0.05
12	SLE RA 14	-331	16	4619	-2.49	-13.19	-0.05
12	SLE RA 15	-325	16	4624	-2.12	-12.98	-0.05
12	SLE RA 16	-329	16	4608	-2.48	-13.14	-0.05
12	SLE RA 17	-323	16	4614	-2.11	-12.93	-0.05
12	SLE RA 18	-336	17	4677	-2.52	-13.38	-0.05
12	SLE RA 19	-330	16	4683	-2.15	-13.17	-0.05
12	SLE RA 20	-338	17	4710	-2.55	-13.46	-0.05
12	SLE RA 21	-332	16	4716	-2.18	-13.25	-0.05
12	SLE FR 1	-300	15	4228	-2.19	-12.01	-0.04
12	SLE FR 2	-298	15	4230	-2.07	-11.94	-0.04
12	SLE FR 3	-301	15	4241	-2.21	-12.04	-0.04
12	SLE FR 4	-309	15	4365	-2.17	-12.35	-0.05
12	SLE FR 5	-312	15	4376	-2.3	-12.45	-0.05
12	SLE FR 6	-318	16	4453	-2.36	-12.69	-0.05
12	SLE QP 1	-300	15	4228	-2.19	-12.01	-0.04
12	SLE QP 2	-311	15	4363	-2.29	-12.42	-0.05
12	SLD 1	63	26	4384	-5.71	4.07	-0.08
12	SLD 2	63	26	4384	-5.71	4.07	-0.08
12	SLD 3	160	20	3405	-2.75	6.71	-0.06
12	SLD 4	160	20	3405	-2.75	6.71	-0.06
12	SLD 5	-346	27	5855	-7.82	-11.47	-0.07
12	SLD 6	-346	27	5855	-7.82	-11.47	-0.07
12	SLD 7	-22	8	2589	2.07	-2.67	-0.03
12	SLD 8	-22	8	2589	2.07	-2.67	-0.03
12	SLD 9	-600	22	6136	-6.66	-22.16	-0.06
12	SLD 10	-600	22	6136	-6.66	-22.16	-0.06
12	SLD 11	-275	4	2870	3.24	-13.36	-0.02
12	SLD 12	-275	4	2870	3.24	-13.36	-0.02
12	SLD 13	-782	10	5321	-1.84	-31.55	-0.03
12	SLD 14	-782	10	5321	-1.84	-31.55	-0.03
12	SLD 15	-684	5	4341	1.13	-28.91	-0.01
12	SLD 16	-684	5	4341	1.13	-28.91	-0.01
12	SLV 1	534	40	4429	-10.31	24.95	-0.12
12	SLV 2	534	40	4429	-10.31	24.95	-0.12
12	SLV 3	764	27	2137	-3.34	31.21	-0.09
12	SLV 4	764	27	2137	-3.34	31.21	-0.09
12	SLV 5	-407	43	7858	-15.27	-10.71	-0.1
12	SLV 6	-407	43	7858	-15.27	-10.71	-0.1
12	SLV 7	361	-1	219	7.96	10.17	-0.02
12	SLV 8	361	-1	219	7.96	10.17	-0.02
12	SLV 9	-983	32	8506	-12.54	-35.01	-0.07
12	SLV 10	-983	32	8506	-12.54	-35.01	-0.07
12	SLV 11	-215	-12	867	10.68	-14.12	0.01
12	SLV 12	-215	-12	867	10.68	-14.12	0.01
12	SLV 13	-1386	4	6588	-1.24	-56.05	0
12	SLV 14	-1386	4	6588	-1.24	-56.05	0

Nodo	Cont.	Reazione a traslazione			Reazione a rotazione		
Ind.	N.br.	x	y	z	x	y	z
12	SLV 15	-1156	-9	4297	5.73	-49.78	0.03
12	SLV 16	-1156	-9	4297	5.73	-49.78	0.03
13	SLU 1	-197	-8	3571	2.98	-3.96	0
13	SLU 2	-186	-10	3593	4.85	-3.48	0
13	SLU 3	-200	-8	3625	3.02	-4	0
13	SLU 4	-194	-9	3638	4.14	-3.71	0
13	SLU 5	-187	-10	3634	4.88	-3.45	0
13	SLU 6	-201	-8	3667	3.05	-3.97	0
13	SLU 7	-195	-9	3679	4.17	-3.68	0
13	SLU 8	-199	-8	3654	3.05	-3.9	0
13	SLU 9	-193	-9	3667	4.16	-3.61	0
13	SLU 10	-213	-11	3992	5.17	-4.09	0
13	SLU 11	-227	-8	4025	3.34	-4.61	0
13	SLU 12	-220	-10	4038	4.46	-4.32	0
13	SLU 13	-214	-11	4034	5.2	-4.06	0
13	SLU 14	-228	-9	4066	3.38	-4.58	0
13	SLU 15	-221	-10	4079	4.49	-4.29	0
13	SLU 16	-226	-9	4054	3.37	-4.51	0
13	SLU 17	-219	-10	4067	4.48	-4.22	0
13	SLU 18	-235	-9	4142	3.44	-4.83	0
13	SLU 19	-228	-10	4155	4.56	-4.54	0
13	SLU 20	-236	-9	4184	3.47	-4.8	0
13	SLU 21	-229	-10	4197	4.59	-4.51	0
13	SLU 22	-219	-8	3853	3.26	-4.48	0
13	SLU 23	-208	-11	3874	5.12	-4	0
13	SLU 24	-222	-8	3907	3.3	-4.52	0
13	SLU 25	-215	-10	3920	4.42	-4.23	0
13	SLU 26	-209	-11	3916	5.15	-3.97	0
13	SLU 27	-223	-8	3949	3.33	-4.49	0
13	SLU 28	-217	-10	3961	4.45	-4.2	0
13	SLU 29	-221	-8	3936	3.32	-4.42	0
13	SLU 30	-215	-10	3949	4.44	-4.13	0
13	SLU 31	-235	-11	4274	5.44	-4.61	0
13	SLU 32	-248	-9	4307	3.62	-5.13	0
13	SLU 33	-242	-11	4320	4.74	-4.84	0
13	SLU 34	-236	-12	4316	5.47	-4.58	0
13	SLU 35	-249	-9	4348	3.65	-5.1	0
13	SLU 36	-243	-11	4361	4.77	-4.81	0
13	SLU 37	-248	-9	4336	3.64	-5.03	0
13	SLU 38	-241	-11	4349	4.76	-4.74	0
13	SLU 39	-257	-9	4424	3.72	-5.35	0
13	SLU 40	-250	-11	4437	4.83	-5.06	0
13	SLU 41	-258	-10	4466	3.75	-5.32	0
13	SLU 42	-251	-11	4479	4.87	-5.03	0
13	SLU 43	-249	-10	4546	3.79	-4.97	0
13	SLU 44	-238	-12	4567	5.65	-4.49	0
13	SLU 45	-252	-10	4600	3.82	-5.01	0
13	SLU 46	-245	-11	4613	4.94	-4.72	0
13	SLU 47	-239	-12	4609	5.68	-4.46	0
13	SLU 48	-253	-10	4641	3.86	-4.98	0
13	SLU 49	-246	-11	4654	4.97	-4.69	0
13	SLU 50	-251	-10	4629	3.85	-4.91	0
13	SLU 51	-244	-11	4642	4.97	-4.62	0
13	SLU 52	-264	-13	4967	5.97	-5.1	0
13	SLU 53	-278	-11	4999	4.14	-5.62	0
13	SLU 54	-272	-12	5012	5.26	-5.33	0
13	SLU 55	-265	-13	5008	6	-5.07	0
13	SLU 56	-279	-11	5041	4.18	-5.59	0
13	SLU 57	-273	-12	5054	5.29	-5.3	0
13	SLU 58	-277	-11	5029	4.17	-5.52	0
13	SLU 59	-271	-12	5041	5.29	-5.23	0
13	SLU 60	-287	-11	5117	4.24	-5.84	0
13	SLU 61	-280	-12	5130	5.36	-5.55	0
13	SLU 62	-288	-11	5158	4.27	-5.81	0
13	SLU 63	-281	-12	5171	5.39	-5.52	0
13	SLU 64	-271	-10	4828	4.06	-5.49	0
13	SLU 65	-260	-13	4849	5.92	-5.01	0
13	SLU 66	-274	-10	4882	4.1	-5.53	0
13	SLU 67	-267	-12	4894	5.22	-5.24	0
13	SLU 68	-261	-13	4891	5.95	-4.98	0
13	SLU 69	-275	-10	4923	4.13	-5.5	0
13	SLU 70	-268	-12	4936	5.25	-5.21	0
13	SLU 71	-273	-10	4911	4.12	-5.43	0
13	SLU 72	-266	-12	4924	5.24	-5.14	0
13	SLU 73	-286	-13	5249	6.24	-5.62	0
13	SLU 74	-300	-11	5281	4.42	-6.14	0
13	SLU 75	-294	-13	5294	5.54	-5.85	0
13	SLU 76	-287	-14	5290	6.27	-5.59	0
13	SLU 77	-301	-11	5323	4.45	-6.11	0
13	SLU 78	-295	-13	5336	5.57	-5.82	0
13	SLU 79	-299	-11	5311	4.44	-6.04	0
13	SLU 80	-293	-13	5323	5.56	-5.75	0
13	SLU 81	-309	-11	5399	4.52	-6.36	0
13	SLU 82	-302	-13	5412	5.64	-6.07	0
13	SLU 83	-310	-12	5440	4.55	-6.33	0
13	SLU 84	-303	-13	5453	5.67	-6.04	0
13	SLE RA 1	-204	-8	3652	3.06	-4.11	0
13	SLE RA 2	-196	-9	3666	4.3	-3.79	0
13	SLE RA 3	-205	-8	3688	3.09	-4.14	0
13	SLE RA 4	-201	-9	3696	3.83	-3.94	0
13	SLE RA 5	-197	-9	3694	4.33	-3.77	0

Nodo	Cont.	Reazione a traslazione			Reazione a rotazione		
Ind.	N.br.	x	y	z	x	y	z
13	SLE RA 6	-206	-8	3715	3.11	-4.12	0
13	SLE RA 7	-202	-9	3724	3.85	-3.92	0
13	SLE RA 8	-205	-8	3707	3.1	-4.07	0
13	SLE RA 9	-201	-9	3716	3.85	-3.88	0
13	SLE RA 10	-214	-10	3932	4.52	-4.2	0
13	SLE RA 11	-223	-8	3954	3.3	-4.54	0
13	SLE RA 12	-219	-9	3963	4.05	-4.35	0
13	SLE RA 13	-215	-10	3960	4.54	-4.17	0
13	SLE RA 14	-224	-8	3982	3.32	-4.52	0
13	SLE RA 15	-219	-9	3990	4.07	-4.33	0
13	SLE RA 16	-223	-8	3974	3.32	-4.47	0
13	SLE RA 17	-218	-9	3982	4.06	-4.28	0
13	SLE RA 18	-229	-9	4032	3.37	-4.69	0
13	SLE RA 19	-224	-9	4041	4.11	-4.5	0
13	SLE RA 20	-229	-9	4060	3.39	-4.67	0
13	SLE RA 21	-225	-10	4069	4.13	-4.48	0
13	SLE FR 1	-204	-8	3652	3.06	-4.11	0
13	SLE FR 2	-202	-8	3654	3.31	-4.05	0
13	SLE FR 3	-204	-8	3663	3.07	-4.1	0
13	SLE FR 4	-210	-8	3769	3.4	-4.22	0
13	SLE FR 5	-211	-8	3777	3.16	-4.28	0
13	SLE FR 6	-216	-8	3842	3.22	-4.4	0
13	SLE QP 1	-204	-8	3652	3.06	-4.11	0
13	SLE QP 2	-211	-8	3766	3.15	-4.28	0
13	SLD 1	223	-5	3892	3.95	14.87	-0.02
13	SLD 2	223	-5	3892	3.95	14.87	-0.02
13	SLD 3	292	2	3116	-0.94	17.23	-0.04
13	SLD 4	292	2	3116	-0.94	17.23	-0.04
13	SLD 5	-185	-17	4979	10.81	-2.12	0.02
13	SLD 6	-185	-17	4979	10.81	-2.12	0.02
13	SLD 7	44	5	2395	-5.49	5.75	-0.04
13	SLD 8	44	5	2395	-5.49	5.75	-0.04
13	SLD 9	-466	-21	5137	11.8	-14.32	0.04
13	SLD 10	-466	-21	5137	11.8	-14.32	0.04
13	SLD 11	-237	1	2552	-4.51	-6.45	-0.02
13	SLD 12	-237	1	2552	-4.51	-6.45	-0.02
13	SLD 13	-714	-17	4415	7.25	-25.8	0.04
13	SLD 14	-714	-17	4415	7.25	-25.8	0.04
13	SLD 15	-645	-11	3640	2.36	-23.44	0.02
13	SLD 16	-645	-11	3640	2.36	-23.44	0.02
13	SLV 1	772	-1	4068	5.03	39.08	-0.05
13	SLV 2	772	-1	4068	5.03	39.08	-0.05
13	SLV 3	937	14	2253	-6.47	44.85	-0.09
13	SLV 4	937	14	2253	-6.47	44.85	-0.09
13	SLV 5	-166	-29	6608	21.16	-0.03	0.05
13	SLV 6	-166	-29	6608	21.16	-0.03	0.05
13	SLV 7	384	22	560	-17.17	19.21	-0.09
13	SLV 8	384	22	560	-17.17	19.21	-0.09
13	SLV 9	-806	-38	6971	23.48	-27.78	0.09
13	SLV 10	-806	-38	6971	23.48	-27.78	0.09
13	SLV 11	-256	13	924	-14.85	-8.54	-0.04
13	SLV 12	-256	13	924	-14.85	-8.54	-0.04
13	SLV 13	-1359	-30	5279	12.77	-53.42	0.09
13	SLV 14	-1359	-30	5279	12.77	-53.42	0.09
13	SLV 15	-1194	-15	3464	1.28	-47.65	0.05
13	SLV 16	-1194	-15	3464	1.28	-47.65	0.05
14	SLU 1	-90	-16	3340	5.91	-5.27	-0.01
14	SLU 2	-86	-20	3365	8.44	-5.09	-0.01
14	SLU 3	-91	-16	3390	6	-5.33	-0.01
14	SLU 4	-88	-19	3405	7.52	-5.22	-0.01
14	SLU 5	-85	-20	3404	8.52	-5.09	-0.01
14	SLU 6	-90	-17	3429	6.08	-5.33	-0.01
14	SLU 7	-88	-19	3444	7.6	-5.22	-0.01
14	SLU 8	-89	-17	3418	6.07	-5.28	-0.01
14	SLU 9	-87	-19	3433	7.58	-5.17	-0.01
14	SLU 10	-100	-22	3736	9.13	-5.87	-0.01
14	SLU 11	-105	-18	3761	6.69	-6.11	-0.01
14	SLU 12	-103	-21	3776	8.21	-6	-0.01
14	SLU 13	-100	-22	3775	9.2	-5.87	-0.01
14	SLU 14	-105	-19	3800	6.77	-6.11	-0.01
14	SLU 15	-102	-21	3815	8.29	-6	-0.01
14	SLU 16	-103	-18	3789	6.75	-6.06	-0.01
14	SLU 17	-101	-21	3804	8.27	-5.95	-0.01
14	SLU 18	-111	-19	3870	6.89	-6.38	-0.01
14	SLU 19	-108	-21	3885	8.41	-6.27	-0.01
14	SLU 20	-110	-19	3909	6.97	-6.39	-0.01
14	SLU 21	-107	-21	3924	8.49	-6.28	-0.01
14	SLU 22	-101	-18	3599	6.47	-5.88	-0.01
14	SLU 23	-97	-21	3625	9	-5.69	-0.01
14	SLU 24	-102	-18	3649	6.56	-5.94	-0.01
14	SLU 25	-99	-20	3665	8.08	-5.83	-0.01
14	SLU 26	-96	-22	3664	9.07	-5.7	-0.01
14	SLU 27	-101	-18	3688	6.64	-5.94	-0.01
14	SLU 28	-99	-20	3704	8.16	-5.83	-0.01
14	SLU 29	-100	-18	3677	6.62	-5.89	-0.01
14	SLU 30	-98	-20	3693	8.14	-5.78	-0.01
14	SLU 31	-111	-23	3996	9.68	-6.47	-0.01
14	SLU 32	-116	-20	4021	7.25	-6.72	-0.01
14	SLU 33	-114	-22	4036	8.77	-6.61	-0.01
14	SLU 34	-111	-23	4035	9.76	-6.48	-0.01
14	SLU 35	-116	-20	4060	7.33	-6.72	-0.01

Nodo	Cont.	Reazione a traslazione			Reazione a rotazione		
Ind.	N.br.	x	y	z	x	y	z
14	SLU 36	-113	-22	4075	8.85	-6.61	-0.01
14	SLU 37	-114	-20	4049	7.31	-6.67	-0.01
14	SLU 38	-112	-22	4064	8.83	-6.56	-0.01
14	SLU 39	-122	-20	4130	7.45	-6.99	-0.01
14	SLU 40	-119	-23	4145	8.97	-6.88	-0.01
14	SLU 41	-121	-21	4169	7.53	-7	-0.01
14	SLU 42	-118	-23	4184	9.05	-6.89	-0.01
14	SLU 43	-114	-20	4253	7.49	-6.64	-0.01
14	SLU 44	-109	-24	4278	10.02	-6.46	-0.01
14	SLU 45	-114	-21	4303	7.59	-6.7	-0.01
14	SLU 46	-112	-23	4318	9.1	-6.59	-0.01
14	SLU 47	-109	-24	4317	10.1	-6.46	-0.01
14	SLU 48	-114	-21	4342	7.66	-6.71	-0.01
14	SLU 49	-111	-23	4357	9.18	-6.59	-0.01
14	SLU 50	-112	-21	4331	7.65	-6.65	-0.01
14	SLU 51	-110	-23	4346	9.16	-6.54	-0.01
14	SLU 52	-124	-26	4649	10.71	-7.24	-0.01
14	SLU 53	-129	-23	4674	8.27	-7.48	-0.01
14	SLU 54	-126	-25	4689	9.79	-7.37	-0.01
14	SLU 55	-123	-26	4688	10.79	-7.24	-0.01
14	SLU 56	-128	-23	4713	8.35	-7.48	-0.01
14	SLU 57	-125	-25	4728	9.87	-7.37	-0.01
14	SLU 58	-127	-23	4702	8.33	-7.43	-0.01
14	SLU 59	-124	-25	4717	9.85	-7.32	-0.01
14	SLU 60	-134	-23	4783	8.47	-7.76	-0.01
14	SLU 61	-131	-25	4798	9.99	-7.65	-0.01
14	SLU 62	-133	-23	4822	8.55	-7.76	-0.01
14	SLU 63	-131	-26	4837	10.07	-7.65	-0.01
14	SLU 64	-125	-22	4512	8.05	-7.25	-0.01
14	SLU 65	-120	-26	4538	10.58	-7.07	-0.01
14	SLU 66	-125	-22	4562	8.14	-7.31	-0.01
14	SLU 67	-123	-24	4578	9.66	-7.2	-0.01
14	SLU 68	-120	-26	4577	10.66	-7.07	-0.01
14	SLU 69	-125	-22	4601	8.22	-7.31	-0.01
14	SLU 70	-122	-25	4617	9.74	-7.2	-0.01
14	SLU 71	-123	-22	4590	8.2	-7.26	-0.01
14	SLU 72	-121	-25	4606	9.72	-7.15	-0.01
14	SLU 73	-135	-28	4909	11.26	-7.85	-0.01
14	SLU 74	-140	-24	4934	8.83	-8.09	-0.01
14	SLU 75	-137	-26	4949	10.35	-7.98	-0.01
14	SLU 76	-134	-28	4948	11.34	-7.85	-0.01
14	SLU 77	-139	-24	4973	8.91	-8.09	-0.01
14	SLU 78	-136	-27	4988	10.43	-7.98	-0.01
14	SLU 79	-138	-24	4962	8.89	-8.04	-0.01
14	SLU 80	-135	-27	4977	10.41	-7.93	-0.01
14	SLU 81	-145	-25	5043	9.03	-8.37	-0.01
14	SLU 82	-142	-27	5058	10.55	-8.25	-0.01
14	SLU 83	-144	-25	5082	9.11	-8.37	-0.01
14	SLU 84	-142	-27	5097	10.63	-8.26	-0.01
14	SLE RA 1	-93	-17	3414	6.07	-5.45	-0.01
14	SLE RA 2	-91	-19	3431	7.75	-5.32	-0.01
14	SLE RA 3	-94	-17	3447	6.13	-5.48	-0.01
14	SLE RA 4	-92	-18	3457	7.14	-5.41	-0.01
14	SLE RA 5	-90	-19	3457	7.81	-5.32	-0.01
14	SLE RA 6	-93	-17	3473	6.18	-5.49	-0.01
14	SLE RA 7	-92	-18	3483	7.2	-5.41	-0.01
14	SLE RA 8	-93	-17	3466	6.17	-5.45	-0.01
14	SLE RA 9	-91	-18	3476	7.18	-5.38	-0.01
14	SLE RA 10	-100	-20	3678	8.21	-5.84	-0.01
14	SLE RA 11	-103	-18	3695	6.59	-6	-0.01
14	SLE RA 12	-102	-19	3705	7.6	-5.93	-0.01
14	SLE RA 13	-100	-20	3704	8.26	-5.84	-0.01
14	SLE RA 14	-103	-18	3721	6.64	-6.01	-0.01
14	SLE RA 15	-101	-20	3731	7.65	-5.93	-0.01
14	SLE RA 16	-102	-18	3713	6.63	-5.97	-0.01
14	SLE RA 17	-100	-20	3724	7.64	-5.9	-0.01
14	SLE RA 18	-107	-18	3767	6.72	-6.19	-0.01
14	SLE RA 19	-105	-20	3778	7.73	-6.11	-0.01
14	SLE RA 20	-107	-19	3793	6.78	-6.19	-0.01
14	SLE RA 21	-105	-20	3804	7.79	-6.12	-0.01
14	SLE FR 1	-93	-17	3414	6.07	-5.45	-0.01
14	SLE FR 2	-93	-17	3417	6.4	-5.42	-0.01
14	SLE FR 3	-93	-17	3424	6.09	-5.45	-0.01
14	SLE FR 4	-97	-18	3523	6.6	-5.64	-0.01
14	SLE FR 5	-97	-17	3530	6.29	-5.67	-0.01
14	SLE FR 6	-100	-17	3591	6.4	-5.82	-0.01
14	SLE QP 1	-93	-17	3414	6.07	-5.45	-0.01
14	SLE QP 2	-98	-17	3520	6.26	-5.67	-0.01
14	SLD 1	379	-20	3781	8.41	14.84	-0.02
14	SLD 2	379	-20	3781	8.41	14.84	-0.02
14	SLD 3	415	-10	3083	1.8	16.25	-0.02
14	SLD 4	415	-10	3083	1.8	16.25	-0.02
14	SLD 5	-9	-34	4657	16.93	-1.64	-0.02
14	SLD 6	-9	-34	4657	16.93	-1.64	-0.02
14	SLD 7	111	1	2330	-5.09	3.03	0
14	SLD 8	111	1	2330	-5.09	3.03	0
14	SLD 9	-306	-35	4710	17.62	-14.37	-0.01
14	SLD 10	-306	-35	4710	17.62	-14.37	-0.01
14	SLD 11	-186	0	2383	-4.4	-9.69	0.01
14	SLD 12	-186	0	2383	-4.4	-9.69	0.01
14	SLD 13	-610	-24	3957	10.73	-27.58	0

Nodo	Cont.	Reazione a traslazione			Reazione a rotazione		
Ind.	N.br.	x	y	z	x	y	z
14	SLD 14	-610	-24	3957	10.73	-27.58	0
14	SLD 15	-574	-14	3259	4.12	-26.18	0.01
14	SLD 16	-574	-14	3259	4.12	-26.18	0.01
14	SLV 1	983	-24	4125	11.29	40.8	-0.04
14	SLV 2	983	-24	4125	11.29	40.8	-0.04
14	SLV 3	1072	0	2492	-4.23	44.3	-0.03
14	SLV 4	1072	0	2492	-4.23	44.3	-0.03
14	SLV 5	91	-56	6180	31.31	2.97	-0.04
14	SLV 6	91	-56	6180	31.31	2.97	-0.04
14	SLV 7	389	25	733	-20.43	14.62	0
14	SLV 8	389	25	733	-20.43	14.62	0
14	SLV 9	-584	-59	6306	32.95	-25.96	-0.02
14	SLV 10	-584	-59	6306	32.95	-25.96	-0.02
14	SLV 11	-286	22	860	-18.78	-14.31	0.02
14	SLV 12	-286	22	860	-18.78	-14.31	0.02
14	SLV 13	-1267	-34	4548	16.76	-55.63	0.02
14	SLV 14	-1267	-34	4548	16.76	-55.63	0.02
14	SLV 15	-1178	-10	2914	1.24	-52.14	0.03
14	SLV 16	-1178	-10	2914	1.24	-52.14	0.03
15	SLU 1	130	-15	3368	5.64	6.14	-0.01
15	SLU 2	127	-19	3391	8.31	6.02	-0.01
15	SLU 3	133	-15	3419	5.74	6.31	-0.01
15	SLU 4	132	-18	3433	7.34	6.24	-0.01
15	SLU 5	131	-20	3432	8.39	6.21	-0.01
15	SLU 6	137	-16	3460	5.82	6.5	-0.01
15	SLU 7	136	-18	3474	7.42	6.42	-0.01
15	SLU 8	138	-16	3449	5.8	6.52	-0.01
15	SLU 9	136	-18	3463	7.4	6.45	-0.01
15	SLU 10	137	-21	3764	8.98	6.54	-0.01
15	SLU 11	144	-17	3792	6.4	6.82	-0.01
15	SLU 12	142	-20	3806	8	6.75	-0.01
15	SLU 13	141	-21	3805	9.06	6.72	-0.01
15	SLU 14	148	-18	3833	6.48	7.01	-0.01
15	SLU 15	146	-20	3847	8.09	6.94	-0.01
15	SLU 16	148	-18	3822	6.47	7.03	-0.01
15	SLU 17	146	-20	3836	8.07	6.96	-0.01
15	SLU 18	144	-18	3901	6.59	6.88	-0.01
15	SLU 19	143	-20	3915	8.2	6.8	-0.01
15	SLU 20	148	-18	3941	6.67	7.06	-0.01
15	SLU 21	147	-21	3955	8.28	6.99	-0.01
15	SLU 22	140	-17	3630	6.18	6.63	-0.01
15	SLU 23	137	-21	3653	8.85	6.51	-0.01
15	SLU 24	143	-17	3681	6.27	6.8	-0.01
15	SLU 25	142	-19	3695	7.87	6.72	-0.01
15	SLU 26	141	-21	3694	8.93	6.7	-0.01
15	SLU 27	147	-17	3722	6.35	6.98	-0.01
15	SLU 28	146	-20	3736	7.95	6.91	-0.01
15	SLU 29	148	-17	3711	6.34	7.01	-0.01
15	SLU 30	146	-20	3725	7.94	6.94	-0.01
15	SLU 31	147	-23	4027	9.51	7.02	-0.01
15	SLU 32	154	-19	4054	6.94	7.31	-0.01
15	SLU 33	152	-21	4068	8.54	7.24	-0.01
15	SLU 34	151	-23	4067	9.59	7.21	-0.01
15	SLU 35	158	-19	4095	7.02	7.5	-0.01
15	SLU 36	156	-21	4109	8.62	7.43	-0.01
15	SLU 37	158	-19	4084	7	7.52	-0.01
15	SLU 38	156	-21	4098	8.61	7.45	-0.01
15	SLU 39	154	-19	4163	7.13	7.36	-0.01
15	SLU 40	153	-22	4177	8.73	7.29	-0.01
15	SLU 41	158	-19	4204	7.21	7.55	-0.01
15	SLU 42	157	-22	4218	8.81	7.48	-0.01
15	SLU 43	165	-19	4288	7.15	7.82	-0.01
15	SLU 44	162	-23	4312	9.82	7.7	-0.01
15	SLU 45	169	-20	4339	7.25	7.98	-0.01
15	SLU 46	167	-22	4353	8.85	7.91	-0.01
15	SLU 47	166	-24	4352	9.9	7.89	-0.01
15	SLU 48	173	-20	4380	7.33	8.17	-0.01
15	SLU 49	171	-22	4394	8.93	8.1	-0.01
15	SLU 50	173	-20	4369	7.31	8.19	-0.01
15	SLU 51	172	-22	4383	8.91	8.12	-0.01
15	SLU 52	173	-25	4685	10.49	8.21	-0.01
15	SLU 53	179	-21	4713	7.91	8.5	-0.01
15	SLU 54	177	-24	4727	9.51	8.42	-0.01
15	SLU 55	177	-25	4725	10.57	8.4	-0.01
15	SLU 56	183	-22	4753	7.99	8.69	-0.01
15	SLU 57	181	-24	4767	9.59	8.61	-0.01
15	SLU 58	184	-22	4742	7.98	8.71	-0.01
15	SLU 59	182	-24	4756	9.58	8.64	-0.01
15	SLU 60	180	-22	4821	8.1	8.55	-0.01
15	SLU 61	178	-24	4835	9.71	8.48	-0.01
15	SLU 62	184	-22	4862	8.18	8.74	-0.01
15	SLU 63	182	-25	4876	9.79	8.67	-0.01
15	SLU 64	175	-21	4550	7.69	8.31	-0.01
15	SLU 65	172	-25	4574	10.36	8.19	-0.01
15	SLU 66	179	-21	4602	7.78	8.47	-0.01
15	SLU 67	177	-23	4616	9.38	8.4	-0.01
15	SLU 68	176	-25	4614	10.44	8.37	-0.01
15	SLU 69	183	-21	4642	7.86	8.66	-0.01
15	SLU 70	181	-24	4656	9.46	8.59	-0.01
15	SLU 71	183	-21	4631	7.85	8.68	-0.01
15	SLU 72	182	-24	4646	9.45	8.61	-0.01

Nodo	Cont.	Reazione a traslazione			Reazione a rotazione		
Ind.	N.br.	x	y	z	x	y	z
15	SLU 73	183	-27	4947	11.02	8.7	-0.01
15	SLU 74	189	-23	4975	8.45	8.98	-0.01
15	SLU 75	187	-25	4989	10.05	8.91	-0.01
15	SLU 76	187	-27	4988	11.1	8.89	-0.01
15	SLU 77	193	-23	5015	8.53	9.17	-0.01
15	SLU 78	191	-26	5029	10.13	9.1	-0.01
15	SLU 79	194	-23	5005	8.51	9.2	-0.01
15	SLU 80	192	-25	5019	10.12	9.12	-0.01
15	SLU 81	190	-23	5083	8.64	9.04	-0.01
15	SLU 82	188	-26	5097	10.24	8.97	-0.01
15	SLU 83	194	-24	5124	8.72	9.23	-0.01
15	SLU 84	192	-26	5138	10.32	9.16	-0.01
15	SLE RA 1	133	-16	3443	5.8	6.28	-0.01
15	SLE RA 2	131	-18	3458	7.58	6.2	-0.01
15	SLE RA 3	135	-16	3477	5.86	6.39	-0.01
15	SLE RA 4	134	-17	3486	6.93	6.34	-0.01
15	SLE RA 5	133	-19	3485	7.63	6.33	-0.01
15	SLE RA 6	138	-16	3504	5.91	6.52	-0.01
15	SLE RA 7	137	-18	3513	6.98	6.47	-0.01
15	SLE RA 8	138	-16	3497	5.9	6.53	-0.01
15	SLE RA 9	137	-18	3506	6.97	6.48	-0.01
15	SLE RA 10	138	-20	3707	8.02	6.54	-0.01
15	SLE RA 11	142	-17	3726	6.3	6.73	-0.01
15	SLE RA 12	141	-19	3735	7.37	6.69	-0.01
15	SLE RA 13	140	-20	3734	8.07	6.67	-0.01
15	SLE RA 14	145	-17	3753	6.36	6.86	-0.01
15	SLE RA 15	143	-19	3762	7.42	6.81	-0.01
15	SLE RA 16	145	-17	3745	6.35	6.88	-0.01
15	SLE RA 17	144	-19	3755	7.41	6.83	-0.01
15	SLE RA 18	142	-17	3798	6.43	6.77	-0.01
15	SLE RA 19	141	-19	3807	7.5	6.72	-0.01
15	SLE RA 20	145	-18	3825	6.48	6.9	-0.01
15	SLE RA 21	144	-19	3834	7.55	6.85	-0.01
15	SLE FR 1	133	-16	3443	5.8	6.28	-0.01
15	SLE FR 2	132	-16	3446	6.15	6.27	-0.01
15	SLE FR 3	134	-16	3453	5.82	6.33	-0.01
15	SLE FR 4	135	-17	3552	6.34	6.41	-0.01
15	SLE FR 5	137	-16	3560	6.01	6.48	-0.01
15	SLE FR 6	137	-16	3620	6.11	6.53	-0.01
15	SLE QP 1	133	-16	3443	5.8	6.28	-0.01
15	SLE QP 2	135	-16	3549	5.99	6.43	-0.01
15	SLD 1	660	-27	4060	12.18	29.05	-0.03
15	SLD 2	660	-27	4060	12.18	29.05	-0.03
15	SLD 3	612	-16	3359	5.32	27.16	-0.02
15	SLD 4	612	-16	3359	5.32	27.16	-0.02
15	SLD 5	366	-36	4766	18.25	16.09	-0.03
15	SLD 6	366	-36	4766	18.25	16.09	-0.03
15	SLD 7	205	1	2429	-4.62	9.77	0.01
15	SLD 8	205	1	2429	-4.62	9.77	0.01
15	SLD 9	66	-33	4669	16.59	3.09	-0.02
15	SLD 10	66	-33	4669	16.59	3.09	-0.02
15	SLD 11	-95	4	2333	-6.28	-3.23	0.02
15	SLD 12	-95	4	2333	-6.28	-3.23	0.02
15	SLD 13	-341	-16	3739	6.65	-14.3	0.01
15	SLD 14	-341	-16	3739	6.65	-14.3	0.01
15	SLD 15	-389	-5	3038	-0.21	-16.2	0.02
15	SLD 16	-389	-5	3038	-0.21	-16.2	0.02
15	SLV 1	1331	-42	4737	20.53	58	-0.07
15	SLV 2	1331	-42	4737	20.53	58	-0.07
15	SLV 3	1214	-16	3097	4.4	53.38	-0.04
15	SLV 4	1214	-16	3097	4.4	53.38	-0.04
15	SLV 5	671	-64	6393	34.82	28.9	-0.07
15	SLV 6	671	-64	6393	34.82	28.9	-0.07
15	SLV 7	282	24	926	-18.96	13.51	0.03
15	SLV 8	282	24	926	-18.96	13.51	0.03
15	SLV 9	-11	-56	6172	30.93	-0.66	-0.05
15	SLV 10	-11	-56	6172	30.93	-0.66	-0.05
15	SLV 11	-400	31	705	-22.85	-16.04	0.06
15	SLV 12	-400	31	705	-22.85	-16.04	0.06
15	SLV 13	-943	-17	4001	7.57	-40.52	0.02
15	SLV 14	-943	-17	4001	7.57	-40.52	0.02
15	SLV 15	-1060	10	2361	-8.56	-45.14	0.05
15	SLV 16	-1060	10	2361	-8.56	-45.14	0.05
16	SLU 1	268	-6	3690	2.46	8.39	0
16	SLU 2	259	-9	3706	4.65	8.05	-0.01
16	SLU 3	274	-6	3748	2.49	8.59	0
16	SLU 4	269	-8	3758	3.81	8.39	-0.01
16	SLU 5	265	-9	3753	4.69	8.24	-0.01
16	SLU 6	280	-6	3794	2.52	8.78	0
16	SLU 7	275	-8	3804	3.84	8.58	-0.01
16	SLU 8	280	-6	3783	2.53	8.77	0
16	SLU 9	275	-8	3792	3.84	8.57	-0.01
16	SLU 10	284	-10	4114	4.94	8.75	-0.01
16	SLU 11	299	-7	4156	2.78	9.29	0
16	SLU 12	294	-9	4166	4.1	9.09	-0.01
16	SLU 13	290	-10	4161	4.98	8.95	-0.01
16	SLU 14	305	-7	4203	2.81	9.49	0
16	SLU 15	300	-9	4213	4.13	9.28	-0.01
16	SLU 16	305	-7	4191	2.82	9.48	0
16	SLU 17	300	-9	4201	4.13	9.27	-0.01
16	SLU 18	304	-7	4273	2.87	9.39	0

Nodo	Cont.	Reazione a traslazione			Reazione a rotazione		
Ind.	N.br.	x	y	z	x	y	z
16	SLU 19	299	-9	4283	4.19	9.19	-0.01
16	SLU 20	310	-7	4319	2.9	9.59	0
16	SLU 21	305	-9	4329	4.22	9.38	-0.01
16	SLU 22	292	-6	3982	2.69	9.08	0
16	SLU 23	283	-10	3998	4.88	8.75	-0.01
16	SLU 24	298	-6	4040	2.72	9.29	0
16	SLU 25	293	-9	4050	4.04	9.08	-0.01
16	SLU 26	289	-10	4045	4.92	8.94	-0.01
16	SLU 27	304	-7	4087	2.76	9.48	0
16	SLU 28	298	-9	4096	4.08	9.28	-0.01
16	SLU 29	303	-7	4075	2.76	9.47	0
16	SLU 30	298	-9	4085	4.08	9.27	-0.01
16	SLU 31	308	-10	4407	5.17	9.45	-0.01
16	SLU 32	323	-7	4448	3.01	9.99	0
16	SLU 33	318	-9	4458	4.33	9.79	-0.01
16	SLU 34	314	-11	4453	5.21	9.64	-0.01
16	SLU 35	329	-7	4495	3.05	10.18	0
16	SLU 36	323	-9	4505	4.37	9.98	-0.01
16	SLU 37	328	-7	4483	3.05	10.17	0
16	SLU 38	323	-9	4493	4.37	9.97	-0.01
16	SLU 39	327	-7	4565	3.1	10.09	0
16	SLU 40	322	-9	4575	4.42	9.89	-0.01
16	SLU 41	333	-8	4612	3.14	10.28	0
16	SLU 42	328	-10	4622	4.46	10.08	-0.01
16	SLU 43	341	-7	4696	3.11	10.67	0
16	SLU 44	332	-11	4713	5.31	10.33	-0.01
16	SLU 45	347	-7	4755	3.15	10.87	0
16	SLU 46	342	-10	4764	4.46	10.67	-0.01
16	SLU 47	338	-11	4759	5.34	10.52	-0.01
16	SLU 48	353	-8	4801	3.18	11.06	0
16	SLU 49	347	-10	4811	4.5	10.86	-0.01
16	SLU 50	352	-8	4789	3.18	11.05	0
16	SLU 51	347	-10	4799	4.5	10.85	-0.01
16	SLU 52	357	-12	5121	5.6	11.03	-0.01
16	SLU 53	372	-8	5163	3.44	11.57	0
16	SLU 54	367	-10	5173	4.75	11.37	-0.01
16	SLU 55	363	-12	5168	5.63	11.22	-0.01
16	SLU 56	378	-8	5209	3.47	11.76	0
16	SLU 57	372	-10	5219	4.79	11.56	-0.01
16	SLU 58	377	-8	5198	3.47	11.75	0
16	SLU 59	372	-10	5208	4.79	11.55	-0.01
16	SLU 60	376	-8	5280	3.53	11.67	0
16	SLU 61	371	-10	5290	4.84	11.47	-0.01
16	SLU 62	382	-9	5326	3.56	11.86	0
16	SLU 63	377	-11	5336	4.88	11.66	-0.01
16	SLU 64	364	-8	4989	3.35	11.36	0
16	SLU 65	355	-11	5005	5.54	11.03	-0.01
16	SLU 66	370	-8	5047	3.38	11.56	0
16	SLU 67	365	-10	5057	4.7	11.36	-0.01
16	SLU 68	361	-11	5052	5.58	11.22	-0.01
16	SLU 69	376	-8	5093	3.41	11.76	0
16	SLU 70	371	-10	5103	4.73	11.56	-0.01
16	SLU 71	376	-8	5082	3.42	11.75	0
16	SLU 72	370	-10	5091	4.73	11.54	-0.01
16	SLU 73	380	-12	5413	5.83	11.73	-0.01
16	SLU 74	395	-9	5455	3.67	12.27	0
16	SLU 75	390	-11	5465	4.99	12.07	-0.01
16	SLU 76	386	-12	5460	5.87	11.92	-0.01
16	SLU 77	401	-9	5502	3.7	12.46	0
16	SLU 78	396	-11	5511	5.02	12.26	-0.01
16	SLU 79	401	-9	5490	3.71	12.45	0
16	SLU 80	395	-11	5500	5.02	12.25	-0.01
16	SLU 81	400	-9	5572	3.76	12.37	0
16	SLU 82	395	-11	5582	5.08	12.16	-0.01
16	SLU 83	406	-9	5618	3.79	12.56	0
16	SLU 84	400	-11	5628	5.11	12.36	-0.01
16	SLE RA 1	275	-6	3773	2.52	8.59	0
16	SLE RA 2	269	-8	3784	3.99	8.36	-0.01
16	SLE RA 3	279	-6	3812	2.54	8.72	0
16	SLE RA 4	276	-7	3819	3.42	8.59	-0.01
16	SLE RA 5	273	-8	3815	4.01	8.49	-0.01
16	SLE RA 6	283	-6	3843	2.57	8.85	0
16	SLE RA 7	279	-7	3850	3.45	8.72	-0.01
16	SLE RA 8	283	-6	3835	2.57	8.84	0
16	SLE RA 9	279	-7	3842	3.45	8.71	-0.01
16	SLE RA 10	286	-9	4056	4.18	8.83	-0.01
16	SLE RA 11	296	-7	4084	2.74	9.19	0
16	SLE RA 12	292	-8	4091	3.62	9.06	-0.01
16	SLE RA 13	290	-9	4087	4.2	8.96	-0.01
16	SLE RA 14	300	-7	4115	2.76	9.32	0
16	SLE RA 15	296	-8	4122	3.64	9.18	-0.01
16	SLE RA 16	299	-7	4107	2.76	9.31	0
16	SLE RA 17	296	-8	4114	3.64	9.18	-0.01
16	SLE RA 18	299	-7	4162	2.8	9.26	0
16	SLE RA 19	295	-8	4169	3.68	9.12	-0.01
16	SLE RA 20	303	-7	4193	2.82	9.39	0
16	SLE RA 21	299	-8	4200	3.7	9.25	-0.01
16	SLE FR 1	275	-6	3773	2.52	8.59	0
16	SLE FR 2	274	-6	3775	2.81	8.54	0
16	SLE FR 3	276	-6	3786	2.53	8.64	0
16	SLE FR 4	281	-7	3892	2.9	8.74	0

Nodo	Cont.	Reazione a traslazione			Reazione a rotazione		
Ind.	N.br.	x	y	z	x	y	z
16	SLE FR 5	284	-6	3902	2.61	8.84	0
16	SLE FR 6	287	-6	3968	2.66	8.92	0
16	SLE QP 1	275	-6	3773	2.52	8.59	0
16	SLE QP 2	282	-6	3890	2.6	8.79	0
16	SLD 1	798	-20	4636	3.8	30.68	-0.03
16	SLD 2	798	-20	4636	3.8	30.68	-0.03
16	SLD 3	708	-12	3846	9.32	27.33	-0.06
16	SLD 4	708	-12	3846	9.32	27.33	-0.06
16	SLD 5	574	-23	5311	-5.4	20.44	0.03
16	SLD 6	574	-23	5311	-5.4	20.44	0.03
16	SLD 7	273	5	2679	12.99	9.26	-0.06
16	SLD 8	273	5	2679	12.99	9.26	-0.06
16	SLD 9	291	-17	5100	-7.78	8.31	0.06
16	SLD 10	291	-17	5100	-7.78	8.31	0.06
16	SLD 11	-9	11	2469	10.61	-2.87	-0.04
16	SLD 12	-9	11	2469	10.61	-2.87	-0.04
16	SLD 13	-144	-1	3933	-4.11	-9.75	0.05
16	SLD 14	-144	-1	3933	-4.11	-9.75	0.05
16	SLD 15	-234	8	3144	1.41	-13.11	0.03
16	SLD 16	-234	8	3144	1.41	-13.11	0.03
16	SLV 1	1458	-39	5614	5.35	58.73	-0.07
16	SLV 2	1458	-39	5614	5.35	58.73	-0.07
16	SLV 3	1245	-19	3767	18.36	50.74	-0.14
16	SLV 4	1245	-19	3767	18.36	50.74	-0.14
16	SLV 5	959	-46	7209	-16.29	35.89	0.08
16	SLV 6	959	-46	7209	-16.29	35.89	0.08
16	SLV 7	247	20	1051	27.05	9.26	-0.14
16	SLV 8	247	20	1051	27.05	9.26	-0.14
16	SLV 9	317	-33	6728	-21.84	8.32	0.14
16	SLV 10	317	-33	6728	-21.84	8.32	0.14
16	SLV 11	-395	34	571	21.5	-18.31	-0.08
16	SLV 12	-395	34	571	21.5	-18.31	-0.08
16	SLV 13	-681	6	4013	-13.15	-33.17	0.13
16	SLV 14	-681	6	4013	-13.15	-33.17	0.13
16	SLV 15	-894	26	2165	-0.14	-41.16	0.07
16	SLV 16	-894	26	2165	-0.14	-41.16	0.07
17	SLU 1	324	15	4321	-2.48	9.95	0.04
17	SLU 2	311	13	4327	-1.26	9.45	0.04
17	SLU 3	331	15	4392	-2.54	10.19	0.04
17	SLU 4	323	14	4396	-1.81	9.88	0.04
17	SLU 5	317	13	4384	-1.3	9.67	0.04
17	SLU 6	338	15	4450	-2.59	10.41	0.04
17	SLU 7	330	14	4453	-1.85	10.11	0.04
17	SLU 8	337	15	4435	-2.56	10.4	0.04
17	SLU 9	329	14	4439	-1.83	10.1	0.04
17	SLU 10	342	15	4807	-1.57	10.29	0.04
17	SLU 11	363	17	4873	-2.86	11.03	0.05
17	SLU 12	355	16	4876	-2.12	10.73	0.05
17	SLU 13	349	15	4864	-1.61	10.52	0.04
17	SLU 14	369	17	4930	-2.9	11.26	0.05
17	SLU 15	361	16	4934	-2.17	10.96	0.05
17	SLU 16	369	17	4915	-2.88	11.25	0.05
17	SLU 17	361	16	4919	-2.14	10.95	0.05
17	SLU 18	369	17	5007	-2.93	11.16	0.05
17	SLU 19	361	16	5011	-2.2	10.86	0.05
17	SLU 20	375	17	5064	-2.97	11.39	0.05
17	SLU 21	367	16	5068	-2.24	11.08	0.05
17	SLU 22	355	16	4674	-2.73	10.88	0.05
17	SLU 23	341	14	4681	-1.51	10.38	0.04
17	SLU 24	362	16	4746	-2.79	11.12	0.05
17	SLU 25	354	15	4750	-2.06	10.81	0.04
17	SLU 26	348	15	4738	-1.55	10.6	0.04
17	SLU 27	369	17	4803	-2.83	11.34	0.05
17	SLU 28	361	16	4807	-2.1	11.04	0.04
17	SLU 29	368	17	4789	-2.81	11.33	0.05
17	SLU 30	360	16	4792	-2.08	11.03	0.04
17	SLU 31	373	16	5161	-1.82	11.22	0.05
17	SLU 32	393	18	5226	-3.11	11.96	0.05
17	SLU 33	385	17	5230	-2.37	11.66	0.05
17	SLU 34	379	16	5218	-1.86	11.45	0.05
17	SLU 35	400	18	5283	-3.15	12.19	0.05
17	SLU 36	392	17	5287	-2.42	11.88	0.05
17	SLU 37	399	18	5269	-3.13	12.18	0.05
17	SLU 38	391	17	5273	-2.39	11.87	0.05
17	SLU 39	399	19	5360	-3.18	12.09	0.05
17	SLU 40	391	18	5364	-2.45	11.79	0.05
17	SLU 41	406	19	5418	-3.22	12.31	0.06
17	SLU 42	398	18	5421	-2.49	12.01	0.05
17	SLU 43	411	19	5496	-3.14	12.62	0.05
17	SLU 44	398	17	5502	-1.92	12.11	0.05
17	SLU 45	418	19	5568	-3.2	12.85	0.05
17	SLU 46	410	18	5571	-2.47	12.55	0.05
17	SLU 47	404	17	5559	-1.96	12.34	0.05
17	SLU 48	425	19	5625	-3.24	13.08	0.05
17	SLU 49	417	18	5628	-2.51	12.78	0.05
17	SLU 50	424	19	5610	-3.22	13.07	0.05
17	SLU 51	416	18	5614	-2.49	12.77	0.05
17	SLU 52	429	19	5982	-2.23	12.96	0.05
17	SLU 53	450	21	6048	-3.52	13.7	0.06
17	SLU 54	442	20	6051	-2.78	13.4	0.06
17	SLU 55	435	19	6039	-2.27	13.19	0.05

Nodo	Cont.	Reazione a traslazione			Reazione a rotazione		
Ind.	N.br.	x	y	z	x	y	z
17	SLU 56	456	21	6105	-3.56	13.93	0.06
17	SLU 57	448	20	6109	-2.82	13.62	0.06
17	SLU 58	455	21	6090	-3.54	13.92	0.06
17	SLU 59	447	20	6094	-2.8	13.61	0.06
17	SLU 60	456	21	6182	-3.59	13.83	0.06
17	SLU 61	448	20	6186	-2.85	13.53	0.06
17	SLU 62	462	21	6239	-3.63	14.05	0.06
17	SLU 63	454	20	6243	-2.9	13.75	0.06
17	SLU 64	441	20	5849	-3.39	13.55	0.06
17	SLU 65	428	18	5856	-2.17	13.04	0.05
17	SLU 66	449	20	5921	-3.45	13.78	0.06
17	SLU 67	441	19	5925	-2.72	13.48	0.05
17	SLU 68	435	18	5913	-2.21	13.27	0.05
17	SLU 69	455	21	5978	-3.49	14.01	0.06
17	SLU 70	447	20	5982	-2.76	13.71	0.06
17	SLU 71	454	21	5964	-3.47	14	0.06
17	SLU 72	446	19	5967	-2.74	13.69	0.06
17	SLU 73	459	20	6336	-2.48	13.89	0.06
17	SLU 74	480	22	6401	-3.77	14.63	0.06
17	SLU 75	472	21	6405	-3.03	14.33	0.06
17	SLU 76	466	20	6393	-2.52	14.11	0.06
17	SLU 77	487	22	6458	-3.81	14.85	0.06
17	SLU 78	479	21	6462	-3.07	14.55	0.06
17	SLU 79	486	22	6444	-3.79	14.84	0.06
17	SLU 80	478	21	6448	-3.05	14.54	0.06
17	SLU 81	486	23	6536	-3.84	14.76	0.07
17	SLU 82	478	22	6539	-3.1	14.45	0.06
17	SLU 83	493	23	6593	-3.88	14.98	0.07
17	SLU 84	485	22	6596	-3.15	14.68	0.06
17	SLE RA 1	333	15	4422	-2.55	10.22	0.04
17	SLE RA 2	324	14	4426	-1.74	9.88	0.04
17	SLE RA 3	338	15	4470	-2.59	10.37	0.04
17	SLE RA 4	332	15	4472	-2.1	10.17	0.04
17	SLE RA 5	328	14	4464	-1.76	10.03	0.04
17	SLE RA 6	342	15	4508	-2.62	10.52	0.04
17	SLE RA 7	337	15	4510	-2.13	10.32	0.04
17	SLE RA 8	342	15	4498	-2.61	10.52	0.04
17	SLE RA 9	336	15	4501	-2.12	10.32	0.04
17	SLE RA 10	345	15	4746	-1.95	10.44	0.04
17	SLE RA 11	359	17	4790	-2.8	10.94	0.05
17	SLE RA 12	353	16	4792	-2.31	10.74	0.05
17	SLE RA 13	349	15	4784	-1.97	10.59	0.04
17	SLE RA 14	363	17	4828	-2.83	11.09	0.05
17	SLE RA 15	358	16	4830	-2.34	10.89	0.05
17	SLE RA 16	362	17	4818	-2.82	11.08	0.05
17	SLE RA 17	357	16	4821	-2.33	10.88	0.05
17	SLE RA 18	363	17	4879	-2.85	11.02	0.05
17	SLE RA 19	357	16	4882	-2.36	10.82	0.05
17	SLE RA 20	367	17	4917	-2.88	11.17	0.05
17	SLE RA 21	362	16	4920	-2.39	10.97	0.05
17	SLE FR 1	333	15	4422	-2.55	10.22	0.04
17	SLE FR 2	331	15	4423	-2.39	10.15	0.04
17	SLE FR 3	335	15	4437	-2.56	10.28	0.04
17	SLE FR 4	340	15	4560	-2.48	10.39	0.04
17	SLE FR 5	343	16	4574	-2.65	10.52	0.04
17	SLE FR 6	348	16	4651	-2.7	10.62	0.05
17	SLE QP 1	333	15	4422	-2.55	10.22	0.04
17	SLE QP 2	342	16	4559	-2.64	10.46	0.04
17	SLD 1	823	8	5617	-0.92	30.02	0.02
17	SLD 2	823	8	5617	-0.92	30.02	0.02
17	SLD 3	710	2	4618	2.47	26.89	0.01
17	SLD 4	710	2	4618	2.47	26.89	0.01
17	SLD 5	659	23	6392	-7.27	21.07	0.06
17	SLD 6	659	23	6392	-7.27	21.07	0.06
17	SLD 7	280	3	3061	4.04	10.64	0.02
17	SLD 8	280	3	3061	4.04	10.64	0.02
17	SLD 9	404	29	6057	-9.32	10.28	0.07
17	SLD 10	404	29	6057	-9.32	10.28	0.07
17	SLD 11	25	9	2726	1.99	-0.15	0.03
17	SLD 12	25	9	2726	1.99	-0.15	0.03
17	SLD 13	-26	29	4501	-7.75	-5.97	0.08
17	SLD 14	-26	29	4501	-7.75	-5.97	0.08
17	SLD 15	-140	23	3501	-4.36	-9.1	0.07
17	SLD 16	-140	23	3501	-4.36	-9.1	0.07
17	SLV 1	1441	-1	7004	1.31	55.05	-0.01
17	SLV 2	1441	-1	7004	1.31	55.05	-0.01
17	SLV 3	1173	-15	4667	9.33	47.63	-0.04
17	SLV 4	1173	-15	4667	9.33	47.63	-0.04
17	SLV 5	1078	33	8836	-13.62	35.1	0.07
17	SLV 6	1078	33	8836	-13.62	35.1	0.07
17	SLV 7	184	-15	1047	13.11	10.35	-0.03
17	SLV 8	184	-15	1047	13.11	10.35	-0.03
17	SLV 9	499	47	8071	-18.4	10.57	0.12
17	SLV 10	499	47	8071	-18.4	10.57	0.12
17	SLV 11	-395	-1	282	8.34	-14.18	0.02
17	SLV 12	-395	-1	282	8.34	-14.18	0.02
17	SLV 13	-489	46	4451	-14.61	-26.71	0.13
17	SLV 14	-489	46	4451	-14.61	-26.71	0.13
17	SLV 15	-757	32	2115	-6.59	-34.13	0.1
17	SLV 16	-757	32	2115	-6.59	-34.13	0.1
18	SLU 1	-25	941	6670	-29.32	-3.63	-0.03

Nodo	Cont.	Reazione a traslazione			Reazione a rotazione		
Ind.	N.br.	x	y	z	x	y	z
18	SLU 2	-40	940	6661	-29.28	-4.33	-0.03
18	SLU 3	-25	962	6788	-30.02	-3.69	-0.03
18	SLU 4	-34	961	6782	-29.99	-4.11	-0.03
18	SLU 5	-40	955	6754	-29.78	-4.37	-0.03
18	SLU 6	-25	977	6880	-30.53	-3.73	-0.03
18	SLU 7	-34	976	6875	-30.5	-4.15	-0.03
18	SLU 8	-24	972	6855	-30.34	-3.7	-0.03
18	SLU 9	-34	971	6850	-30.31	-4.12	-0.03
18	SLU 10	-51	1060	7417	-33.17	-5.06	-0.03
18	SLU 11	-36	1082	7544	-33.91	-4.42	-0.03
18	SLU 12	-45	1081	7538	-33.88	-4.84	-0.03
18	SLU 13	-51	1075	7510	-33.67	-5.09	-0.03
18	SLU 14	-36	1097	7637	-34.42	-4.45	-0.03
18	SLU 15	-45	1096	7631	-34.39	-4.87	-0.03
18	SLU 16	-35	1092	7611	-34.23	-4.43	-0.03
18	SLU 17	-44	1091	7606	-34.2	-4.85	-0.03
18	SLU 18	-40	1113	7750	-34.88	-4.67	-0.03
18	SLU 19	-49	1112	7745	-34.85	-5.09	-0.03
18	SLU 20	-40	1128	7843	-35.39	-4.7	-0.03
18	SLU 21	-49	1127	7837	-35.36	-5.12	-0.03
18	SLU 22	-28	1038	7244	-32.5	-4.02	-0.03
18	SLU 23	-43	1036	7235	-32.45	-4.71	-0.03
18	SLU 24	-28	1058	7362	-33.2	-4.08	-0.03
18	SLU 25	-38	1057	7356	-33.17	-4.5	-0.03
18	SLU 26	-43	1052	7328	-32.96	-4.75	-0.03
18	SLU 27	-28	1074	7455	-33.71	-4.11	-0.03
18	SLU 28	-37	1073	7449	-33.68	-4.53	-0.03
18	SLU 29	-28	1068	7429	-33.52	-4.09	-0.03
18	SLU 30	-37	1067	7424	-33.49	-4.51	-0.03
18	SLU 31	-54	1156	7991	-36.35	-5.44	-0.03
18	SLU 32	-39	1178	8118	-37.09	-4.8	-0.03
18	SLU 33	-48	1177	8113	-37.06	-5.22	-0.03
18	SLU 34	-54	1172	8084	-36.85	-5.48	-0.03
18	SLU 35	-39	1194	8211	-37.6	-4.84	-0.03
18	SLU 36	-48	1193	8205	-37.57	-5.26	-0.03
18	SLU 37	-38	1188	8186	-37.41	-4.81	-0.03
18	SLU 38	-47	1187	8180	-37.38	-5.23	-0.03
18	SLU 39	-43	1209	8324	-38.06	-5.05	-0.03
18	SLU 40	-53	1208	8319	-38.03	-5.47	-0.03
18	SLU 41	-43	1224	8417	-38.57	-5.09	-0.03
18	SLU 42	-52	1224	8412	-38.54	-5.51	-0.03
18	SLU 43	-31	1191	8474	-37.03	-4.59	-0.03
18	SLU 44	-46	1189	8465	-36.98	-5.29	-0.03
18	SLU 45	-32	1211	8592	-37.73	-4.65	-0.03
18	SLU 46	-41	1210	8586	-37.7	-5.07	-0.03
18	SLU 47	-46	1205	8558	-37.49	-5.32	-0.03
18	SLU 48	-31	1227	8684	-38.24	-4.69	-0.03
18	SLU 49	-40	1226	8679	-38.21	-5.1	-0.03
18	SLU 50	-31	1222	8659	-38.05	-4.66	-0.03
18	SLU 51	-40	1221	8654	-38.02	-5.08	-0.03
18	SLU 52	-57	1309	9221	-40.87	-6.01	-0.03
18	SLU 53	-42	1331	9348	-41.62	-5.38	-0.04
18	SLU 54	-51	1330	9343	-41.59	-5.8	-0.04
18	SLU 55	-57	1325	9314	-41.38	-6.05	-0.03
18	SLU 56	-42	1347	9441	-42.13	-5.41	-0.04
18	SLU 57	-51	1346	9435	-42.1	-5.83	-0.04
18	SLU 58	-42	1341	9416	-41.94	-5.39	-0.04
18	SLU 59	-51	1341	9410	-41.91	-5.81	-0.04
18	SLU 60	-47	1362	9554	-42.59	-5.63	-0.04
18	SLU 61	-56	1361	9549	-42.56	-6.05	-0.04
18	SLU 62	-46	1378	9647	-43.1	-5.66	-0.04
18	SLU 63	-55	1377	9642	-43.07	-6.08	-0.04
18	SLU 64	-35	1287	9048	-40.21	-4.97	-0.04
18	SLU 65	-50	1286	9039	-40.16	-5.67	-0.03
18	SLU 66	-35	1308	9166	-40.91	-5.03	-0.04
18	SLU 67	-44	1307	9161	-40.88	-5.45	-0.04
18	SLU 68	-49	1301	9132	-40.67	-5.71	-0.04
18	SLU 69	-35	1323	9259	-41.41	-5.07	-0.04
18	SLU 70	-44	1322	9253	-41.38	-5.49	-0.04
18	SLU 71	-34	1318	9234	-41.23	-5.04	-0.04
18	SLU 72	-43	1317	9228	-41.2	-5.46	-0.04
18	SLU 73	-60	1406	9795	-44.05	-6.4	-0.04
18	SLU 74	-46	1428	9922	-44.8	-5.76	-0.04
18	SLU 75	-55	1427	9917	-44.77	-6.18	-0.04
18	SLU 76	-60	1421	9888	-44.56	-6.43	-0.04
18	SLU 77	-45	1443	10015	-45.31	-5.8	-0.04
18	SLU 78	-54	1442	10009	-45.28	-6.21	-0.04
18	SLU 79	-45	1438	9990	-45.12	-5.77	-0.04
18	SLU 80	-54	1437	9984	-45.09	-6.19	-0.04
18	SLU 81	-50	1458	10128	-45.77	-6.01	-0.04
18	SLU 82	-59	1458	10123	-45.74	-6.43	-0.04
18	SLU 83	-50	1474	10221	-46.28	-6.05	-0.04
18	SLU 84	-59	1473	10216	-46.25	-6.47	-0.04
18	SLE RA 1	-26	969	6834	-30.23	-3.74	-0.03
18	SLE RA 2	-36	968	6828	-30.2	-4.21	-0.03
18	SLE RA 3	-26	983	6912	-30.7	-3.78	-0.03
18	SLE RA 4	-32	982	6909	-30.68	-4.06	-0.03
18	SLE RA 5	-36	978	6890	-30.54	-4.23	-0.03
18	SLE RA 6	-26	993	6974	-31.04	-3.81	-0.03
18	SLE RA 7	-32	992	6971	-31.02	-4.08	-0.03
18	SLE RA 8	-26	989	6958	-30.91	-3.79	-0.03

Nodo	Cont.	Reazione a traslazione			Reazione a rotazione		
Ind.	N.br.	x	y	z	x	y	z
18	SLE RA 9	-32	989	6954	-30.89	-4.07	-0.03
18	SLE RA 10	-43	1048	7332	-32.79	-4.69	-0.03
18	SLE RA 11	-33	1063	7417	-33.29	-4.27	-0.03
18	SLE RA 12	-39	1062	7413	-33.27	-4.55	-0.03
18	SLE RA 13	-43	1058	7394	-33.13	-4.71	-0.03
18	SLE RA 14	-33	1073	7478	-33.63	-4.29	-0.03
18	SLE RA 15	-39	1072	7475	-33.61	-4.57	-0.03
18	SLE RA 16	-33	1069	7462	-33.5	-4.27	-0.03
18	SLE RA 17	-39	1069	7458	-33.48	-4.55	-0.03
18	SLE RA 18	-36	1083	7554	-33.94	-4.43	-0.03
18	SLE RA 19	-42	1083	7551	-33.92	-4.71	-0.03
18	SLE RA 20	-36	1093	7616	-34.28	-4.46	-0.03
18	SLE RA 21	-42	1093	7612	-34.26	-4.74	-0.03
18	SLE FR 1	-26	969	6834	-30.23	-3.74	-0.03
18	SLE FR 2	-28	969	6833	-30.23	-3.83	-0.03
18	SLE FR 3	-26	973	6859	-30.37	-3.75	-0.03
18	SLE FR 4	-31	1003	7049	-31.34	-4.04	-0.03
18	SLE FR 5	-29	1007	7075	-31.48	-3.96	-0.03
18	SLE FR 6	-31	1026	7194	-32.09	-4.09	-0.03
18	SLE QP 1	-26	969	6834	-30.23	-3.74	-0.03
18	SLE QP 2	-29	1003	7050	-31.34	-3.95	-0.03
18	SLD 1	263	1374	8895	-46.33	9.57	-0.07
18	SLD 2	263	1374	8895	-46.33	9.57	-0.07
18	SLD 3	298	1016	7211	-31.34	11.32	-0.06
18	SLD 4	298	1016	7211	-31.34	11.32	-0.06
18	SLD 5	6	1657	10157	-58.58	-2.54	-0.05
18	SLD 6	6	1657	10157	-58.58	-2.54	-0.05
18	SLD 7	122	465	4545	-8.6	3.27	-0.02
18	SLD 8	122	465	4545	-8.6	3.27	-0.02
18	SLD 9	-180	1541	9555	-54.09	-11.17	-0.03
18	SLD 10	-180	1541	9555	-54.09	-11.17	-0.03
18	SLD 11	-64	350	3943	-4.11	-5.36	0
18	SLD 12	-64	350	3943	-4.11	-5.36	0
18	SLD 13	-356	990	6888	-31.35	-19.21	0
18	SLD 14	-356	990	6888	-31.35	-19.21	0
18	SLD 15	-321	632	5205	-16.36	-17.47	0.01
18	SLD 16	-321	632	5205	-16.36	-17.47	0.01
18	SLV 1	632	1858	11317	-65.92	26.66	-0.12
18	SLV 2	632	1858	11317	-65.92	26.66	-0.12
18	SLV 3	718	1024	7382	-30.96	30.97	-0.09
18	SLV 4	718	1024	7382	-30.96	30.97	-0.09
18	SLV 5	40	2524	14298	-94.72	-1.31	-0.09
18	SLV 6	40	2524	14298	-94.72	-1.31	-0.09
18	SLV 7	325	-255	1182	21.78	13.07	-0.01
18	SLV 8	325	-255	1182	21.78	13.07	-0.01
18	SLV 9	-383	2261	12918	-84.47	-20.97	-0.05
18	SLV 10	-383	2261	12918	-84.47	-20.97	-0.05
18	SLV 11	-98	-518	-198	32.04	-6.59	0.04
18	SLV 12	-98	-518	-198	32.04	-6.59	0.04
18	SLV 13	-775	982	6718	-31.73	-38.87	0.04
18	SLV 14	-775	982	6718	-31.73	-38.87	0.04
18	SLV 15	-690	148	2783	3.23	-34.56	0.06
18	SLV 16	-690	148	2783	3.23	-34.56	0.06
19	SLU 1	-406	16	4132	-2.28	-13.95	-0.03
19	SLU 2	-422	17	4115	-3.23	-14.53	-0.03
19	SLU 3	-415	17	4200	-2.33	-14.23	-0.03
19	SLU 4	-424	17	4190	-2.9	-14.58	-0.03
19	SLU 5	-428	18	4170	-3.28	-14.71	-0.03
19	SLU 6	-421	17	4254	-2.37	-14.42	-0.03
19	SLU 7	-430	18	4244	-2.95	-14.77	-0.03
19	SLU 8	-418	17	4240	-2.36	-14.31	-0.03
19	SLU 9	-428	17	4231	-2.94	-14.67	-0.03
19	SLU 10	-478	20	4566	-3.55	-16.58	-0.03
19	SLU 11	-472	19	4651	-2.65	-16.28	-0.03
19	SLU 12	-481	19	4641	-3.22	-16.63	-0.03
19	SLU 13	-485	20	4621	-3.59	-16.77	-0.03
19	SLU 14	-478	19	4705	-2.69	-16.47	-0.03
19	SLU 15	-487	20	4695	-3.26	-16.82	-0.03
19	SLU 16	-475	19	4691	-2.68	-16.37	-0.03
19	SLU 17	-484	20	4682	-3.25	-16.72	-0.03
19	SLU 18	-488	19	4776	-2.73	-16.87	-0.03
19	SLU 19	-497	20	4766	-3.3	-17.23	-0.03
19	SLU 20	-494	19	4830	-2.77	-17.06	-0.03
19	SLU 21	-503	20	4820	-3.35	-17.41	-0.03
19	SLU 22	-446	18	4472	-2.54	-15.31	-0.03
19	SLU 23	-461	19	4456	-3.5	-15.9	-0.03
19	SLU 24	-455	18	4540	-2.6	-15.6	-0.03
19	SLU 25	-464	19	4530	-3.17	-15.95	-0.03
19	SLU 26	-467	19	4510	-3.54	-16.08	-0.03
19	SLU 27	-461	18	4595	-2.64	-15.79	-0.03
19	SLU 28	-470	19	4585	-3.21	-16.14	-0.03
19	SLU 29	-458	18	4581	-2.63	-15.68	-0.03
19	SLU 30	-467	19	4571	-3.2	-16.03	-0.03
19	SLU 31	-518	21	4907	-3.82	-17.95	-0.03
19	SLU 32	-512	20	4991	-2.91	-17.65	-0.04
19	SLU 33	-521	21	4981	-3.49	-18	-0.03
19	SLU 34	-524	21	4961	-3.86	-18.13	-0.03
19	SLU 35	-518	21	5046	-2.96	-17.84	-0.04
19	SLU 36	-527	21	5036	-3.53	-18.19	-0.03
19	SLU 37	-515	20	5032	-2.95	-17.73	-0.04
19	SLU 38	-524	21	5022	-3.52	-18.08	-0.03

Nodo	Cont.	Reazione a traslazione			Reazione a rotazione		
Ind.	N.br.	x	y	z	x	y	z
19	SLU 39	-527	21	5116	-3	-18.24	-0.04
19	SLU 40	-537	22	5107	-3.57	-18.59	-0.03
19	SLU 41	-533	21	5171	-3.04	-18.43	-0.04
19	SLU 42	-543	22	5161	-3.61	-18.78	-0.03
19	SLU 43	-515	20	5254	-2.87	-17.66	-0.04
19	SLU 44	-530	22	5238	-3.83	-18.24	-0.03
19	SLU 45	-523	21	5322	-2.92	-17.95	-0.04
19	SLU 46	-532	22	5313	-3.5	-18.3	-0.03
19	SLU 47	-536	22	5292	-3.87	-18.43	-0.03
19	SLU 48	-529	21	5377	-2.96	-18.13	-0.04
19	SLU 49	-538	22	5367	-3.54	-18.48	-0.04
19	SLU 50	-527	21	5363	-2.95	-18.03	-0.04
19	SLU 51	-536	22	5353	-3.53	-18.38	-0.04
19	SLU 52	-587	24	5689	-4.14	-20.3	-0.04
19	SLU 53	-580	23	5773	-3.24	-20	-0.04
19	SLU 54	-589	24	5764	-3.81	-20.35	-0.04
19	SLU 55	-593	24	5743	-4.19	-20.48	-0.04
19	SLU 56	-586	23	5828	-3.28	-20.18	-0.04
19	SLU 57	-595	24	5818	-3.86	-20.53	-0.04
19	SLU 58	-584	23	5814	-3.27	-20.08	-0.04
19	SLU 59	-593	24	5804	-3.85	-20.43	-0.04
19	SLU 60	-596	23	5899	-3.32	-20.59	-0.04
19	SLU 61	-605	24	5889	-3.9	-20.94	-0.04
19	SLU 62	-602	24	5953	-3.36	-20.77	-0.04
19	SLU 63	-611	24	5943	-3.94	-21.12	-0.04
19	SLU 64	-554	22	5595	-3.14	-19.03	-0.04
19	SLU 65	-570	23	5578	-4.09	-19.61	-0.04
19	SLU 66	-563	23	5663	-3.19	-19.32	-0.04
19	SLU 67	-572	23	5653	-3.76	-19.67	-0.04
19	SLU 68	-576	24	5633	-4.14	-19.8	-0.04
19	SLU 69	-569	23	5717	-3.23	-19.5	-0.04
19	SLU 70	-578	24	5707	-3.81	-19.85	-0.04
19	SLU 71	-566	23	5704	-3.22	-19.4	-0.04
19	SLU 72	-576	23	5694	-3.8	-19.75	-0.04
19	SLU 73	-627	25	6029	-4.41	-21.66	-0.04
19	SLU 74	-620	25	6114	-3.51	-21.37	-0.04
19	SLU 75	-629	25	6104	-4.08	-21.72	-0.04
19	SLU 76	-633	26	6084	-4.45	-21.85	-0.04
19	SLU 77	-626	25	6168	-3.55	-21.55	-0.04
19	SLU 78	-635	26	6159	-4.12	-21.9	-0.04
19	SLU 79	-623	25	6155	-3.54	-21.45	-0.04
19	SLU 80	-633	25	6145	-4.11	-21.8	-0.04
19	SLU 81	-636	25	6239	-3.59	-21.96	-0.04
19	SLU 82	-645	26	6229	-4.16	-22.31	-0.04
19	SLU 83	-642	25	6294	-3.63	-22.14	-0.04
19	SLU 84	-651	26	6284	-4.2	-22.49	-0.04
19	SLE RA 1	-418	17	4229	-2.35	-14.34	-0.03
19	SLE RA 2	-428	18	4218	-2.99	-14.73	-0.03
19	SLE RA 3	-423	17	4274	-2.39	-14.53	-0.03
19	SLE RA 4	-429	17	4268	-2.77	-14.76	-0.03
19	SLE RA 5	-432	18	4254	-3.02	-14.85	-0.03
19	SLE RA 6	-427	17	4311	-2.42	-14.65	-0.03
19	SLE RA 7	-434	18	4304	-2.8	-14.88	-0.03
19	SLE RA 8	-426	17	4301	-2.41	-14.58	-0.03
19	SLE RA 9	-432	18	4295	-2.79	-14.82	-0.03
19	SLE RA 10	-466	19	4519	-3.2	-16.09	-0.03
19	SLE RA 11	-461	18	4575	-2.6	-15.89	-0.03
19	SLE RA 12	-467	19	4568	-2.98	-16.13	-0.03
19	SLE RA 13	-470	19	4555	-3.23	-16.22	-0.03
19	SLE RA 14	-465	18	4611	-2.63	-16.02	-0.03
19	SLE RA 15	-471	19	4605	-3.01	-16.25	-0.03
19	SLE RA 16	-464	18	4602	-2.62	-15.95	-0.03
19	SLE RA 17	-470	19	4595	-3	-16.18	-0.03
19	SLE RA 18	-472	19	4658	-2.65	-16.29	-0.03
19	SLE RA 19	-478	19	4652	-3.04	-16.52	-0.03
19	SLE RA 20	-476	19	4695	-2.68	-16.41	-0.03
19	SLE RA 21	-482	19	4688	-3.07	-16.65	-0.03
19	SLE FR 1	-418	17	4229	-2.35	-14.34	-0.03
19	SLE FR 2	-420	17	4227	-2.48	-14.41	-0.03
19	SLE FR 3	-419	17	4243	-2.36	-14.39	-0.03
19	SLE FR 4	-436	17	4356	-2.57	-15	-0.03
19	SLE FR 5	-436	17	4372	-2.46	-14.97	-0.03
19	SLE FR 6	-445	18	4444	-2.5	-15.31	-0.03
19	SLE QP 1	-418	17	4229	-2.35	-14.34	-0.03
19	SLE QP 2	-434	17	4358	-2.44	-14.92	-0.03
19	SLD 1	-304	23	4206	-6.53	-7.7	-0.04
19	SLD 2	-304	23	4206	-6.53	-7.7	-0.04
19	SLD 3	-139	18	3274	-3.9	-1.16	-0.03
19	SLD 4	-139	18	3274	-3.9	-1.16	-0.03
19	SLD 5	-645	27	5725	-7.66	-22.67	-0.05
19	SLD 6	-645	27	5725	-7.66	-22.67	-0.05
19	SLD 7	-95	9	2620	1.11	-0.88	-0.01
19	SLD 8	-95	9	2620	1.11	-0.88	-0.01
19	SLD 9	-773	25	6095	-6	-28.97	-0.05
19	SLD 10	-773	25	6095	-6	-28.97	-0.05
19	SLD 11	-223	7	2991	2.77	-7.17	-0.01
19	SLD 12	-223	7	2991	2.77	-7.17	-0.01
19	SLD 13	-729	17	5441	-0.99	-28.68	-0.03
19	SLD 14	-729	17	5441	-0.99	-28.68	-0.03
19	SLD 15	-564	11	4510	1.64	-22.15	-0.02
19	SLD 16	-564	11	4510	1.64	-22.15	-0.02

Nodo	Cont.	Reazione a traslazione			Reazione a rotazione		
Ind.	N.br.	x	y	z	x	y	z
19	SLV 1	-140	31	4021	-12.02	1.41	-0.06
19	SLV 2	-140	31	4021	-12.02	1.41	-0.06
19	SLV 3	244	19	1841	-5.83	16.63	-0.04
19	SLV 4	244	19	1841	-5.83	16.63	-0.04
19	SLV 5	-928	40	7562	-14.71	-33.12	-0.08
19	SLV 6	-928	40	7562	-14.71	-33.12	-0.08
19	SLV 7	352	-1	297	5.93	17.64	0.01
19	SLV 8	352	-1	297	5.93	17.64	0.01
19	SLV 9	-1220	36	8418	-10.82	-47.49	-0.07
19	SLV 10	-1220	36	8418	-10.82	-47.49	-0.07
19	SLV 11	60	-6	1153	9.82	3.28	0.02
19	SLV 12	60	-6	1153	9.82	3.28	0.02
19	SLV 13	-1112	16	6874	0.94	-46.48	-0.02
19	SLV 14	-1112	16	6874	0.94	-46.48	-0.02
19	SLV 15	-728	4	4695	7.14	-31.25	0
19	SLV 16	-728	4	4695	7.14	-31.25	0
20	SLU 1	-534	-1	3660	2.23	-24.79	0
20	SLU 2	-550	1	3634	0.43	-25.54	0
20	SLU 3	-544	-1	3717	2.27	-25.27	0
20	SLU 4	-554	1	3702	1.19	-25.72	0
20	SLU 5	-558	1	3680	0.46	-25.91	0
20	SLU 6	-552	-1	3763	2.3	-25.65	0
20	SLU 7	-562	1	3747	1.22	-26.09	0
20	SLU 8	-550	-1	3752	2.28	-25.55	0
20	SLU 9	-559	1	3736	1.2	-25.99	0
20	SLU 10	-619	1	4023	0.65	-28.67	0
20	SLU 11	-614	-1	4106	2.49	-28.4	0
20	SLU 12	-623	0	4090	1.41	-28.85	0
20	SLU 13	-627	1	4068	0.68	-29.04	0
20	SLU 14	-622	-1	4152	2.52	-28.77	0
20	SLU 15	-631	0	4136	1.44	-29.22	0
20	SLU 16	-619	-1	4140	2.5	-28.67	0
20	SLU 17	-629	0	4125	1.43	-29.12	0
20	SLU 18	-633	-1	4216	2.55	-29.26	0
20	SLU 19	-642	0	4200	1.47	-29.71	0
20	SLU 20	-641	-1	4261	2.57	-29.64	0
20	SLU 21	-650	0	4246	1.5	-30.08	0
20	SLU 22	-584	-1	3954	2.38	-27.09	0
20	SLU 23	-600	1	3928	0.58	-27.83	0
20	SLU 24	-594	-1	4011	2.42	-27.56	0
20	SLU 25	-604	1	3995	1.34	-28.01	0
20	SLU 26	-608	1	3974	0.61	-28.21	0
20	SLU 27	-602	-1	4057	2.45	-27.94	0
20	SLU 28	-612	1	4041	1.37	-28.39	0
20	SLU 29	-600	-1	4046	2.43	-27.84	0
20	SLU 30	-609	1	4030	1.35	-28.28	0
20	SLU 31	-669	1	4317	0.81	-30.96	0
20	SLU 32	-664	-1	4400	2.64	-30.69	0
20	SLU 33	-673	0	4384	1.57	-31.14	0
20	SLU 34	-677	1	4362	0.83	-31.33	0
20	SLU 35	-671	-1	4446	2.67	-31.07	0
20	SLU 36	-681	0	4430	1.59	-31.51	0
20	SLU 37	-669	-1	4434	2.66	-30.97	0
20	SLU 38	-678	0	4419	1.58	-31.41	0
20	SLU 39	-683	-1	4509	2.7	-31.56	0
20	SLU 40	-692	0	4494	1.62	-32	0
20	SLU 41	-691	-1	4555	2.73	-31.93	0
20	SLU 42	-700	0	4539	1.65	-32.38	0
20	SLU 43	-677	-1	4658	2.85	-31.45	0
20	SLU 44	-693	1	4631	1.05	-32.19	0
20	SLU 45	-688	-1	4715	2.89	-31.92	0
20	SLU 46	-697	0	4699	1.81	-32.37	0
20	SLU 47	-701	1	4677	1.07	-32.57	0
20	SLU 48	-695	-1	4760	2.91	-32.3	0
20	SLU 49	-705	0	4745	1.83	-32.75	0
20	SLU 50	-693	-1	4749	2.9	-32.2	0
20	SLU 51	-702	0	4733	1.82	-32.64	0
20	SLU 52	-762	1	5020	1.27	-35.32	0
20	SLU 53	-757	-1	5103	3.11	-35.05	0
20	SLU 54	-766	0	5088	2.03	-35.5	0
20	SLU 55	-770	1	5066	1.3	-35.69	0
20	SLU 56	-765	-1	5149	3.14	-35.43	0
20	SLU 57	-774	0	5133	2.06	-35.87	0
20	SLU 58	-762	-1	5138	3.12	-35.33	0
20	SLU 59	-772	0	5122	2.04	-35.77	0
20	SLU 60	-776	-1	5213	3.17	-35.92	0
20	SLU 61	-786	0	5197	2.09	-36.36	0
20	SLU 62	-784	-1	5259	3.19	-36.29	0
20	SLU 63	-793	0	5243	2.11	-36.74	0
20	SLU 64	-727	-1	4952	3	-33.74	0
20	SLU 65	-743	1	4925	1.2	-34.48	0
20	SLU 66	-737	-1	5009	3.04	-34.22	0
20	SLU 67	-747	0	4993	1.96	-34.66	0
20	SLU 68	-751	1	4971	1.23	-34.86	0
20	SLU 69	-745	-1	5054	3.06	-34.59	0
20	SLU 70	-755	0	5038	1.99	-35.04	0
20	SLU 71	-743	-1	5043	3.05	-34.49	0
20	SLU 72	-752	0	5027	1.97	-34.94	0
20	SLU 73	-812	1	5314	1.42	-37.61	0
20	SLU 74	-807	-1	5397	3.26	-37.34	0
20	SLU 75	-816	0	5381	2.18	-37.79	0

Nodo	Cont.	Reazione a traslazione			Reazione a rotazione		
Ind.	N.br.	x	y	z	x	y	z
20	SLU 76	-820	1	5360	1.45	-37.99	0
20	SLU 77	-815	-1	5443	3.29	-37.72	0
20	SLU 78	-824	0	5427	2.21	-38.17	0
20	SLU 79	-812	-1	5432	3.27	-37.62	0
20	SLU 80	-822	0	5416	2.19	-38.06	0
20	SLU 81	-826	-1	5507	3.32	-38.21	0
20	SLU 82	-835	0	5491	2.24	-38.65	0
20	SLU 83	-834	-1	5553	3.34	-38.58	0
20	SLU 84	-843	0	5537	2.26	-39.03	0
20	SLE RA 1	-548	-1	3744	2.27	-25.45	0
20	SLE RA 2	-559	1	3727	1.07	-25.95	0
20	SLE RA 3	-555	-1	3782	2.3	-25.77	0
20	SLE RA 4	-562	0	3772	1.58	-26.07	0
20	SLE RA 5	-564	1	3757	1.09	-26.2	0
20	SLE RA 6	-560	-1	3813	2.32	-26.02	0
20	SLE RA 7	-567	0	3802	1.6	-26.32	0
20	SLE RA 8	-559	-1	3805	2.31	-25.95	0
20	SLE RA 9	-565	0	3795	1.59	-26.25	0
20	SLE RA 10	-605	1	3986	1.22	-28.03	0
20	SLE RA 11	-601	-1	4041	2.45	-27.85	0
20	SLE RA 12	-608	0	4031	1.73	-28.15	0
20	SLE RA 13	-610	1	4016	1.24	-28.28	0
20	SLE RA 14	-607	-1	4072	2.47	-28.1	0
20	SLE RA 15	-613	0	4061	1.75	-28.4	0
20	SLE RA 16	-605	-1	4064	2.46	-28.04	0
20	SLE RA 17	-611	0	4054	1.74	-28.33	0
20	SLE RA 18	-614	-1	4114	2.49	-28.43	0
20	SLE RA 19	-621	0	4104	1.77	-28.73	0
20	SLE RA 20	-619	-1	4145	2.5	-28.68	0
20	SLE RA 21	-626	0	4134	1.78	-28.98	0
20	SLE FR 1	-548	-1	3744	2.27	-25.45	0
20	SLE FR 2	-550	-1	3741	2.03	-25.55	0
20	SLE FR 3	-550	-1	3757	2.28	-25.55	0
20	SLE FR 4	-570	-1	3852	2.1	-26.44	0
20	SLE FR 5	-570	-1	3868	2.34	-26.44	0
20	SLE FR 6	-581	-1	3929	2.38	-26.94	0
20	SLE QP 1	-548	-1	3744	2.27	-25.45	0
20	SLE QP 2	-568	-1	3855	2.34	-26.34	0
20	SLD 1	-427	3	3652	-2.28	-18	0.02
20	SLD 2	-427	3	3652	-2.28	-18	0.02
20	SLD 3	-260	8	2919	-6.25	-11.54	0.01
20	SLD 4	-260	8	2919	-6.25	-11.54	0.01
20	SLD 5	-780	-7	4906	6.97	-33.65	0.03
20	SLD 6	-780	-7	4906	6.97	-33.65	0.03
20	SLD 7	-221	9	2463	-6.26	-12.09	-0.02
20	SLD 8	-221	9	2463	-6.26	-12.09	-0.02
20	SLD 9	-914	-11	5247	10.93	-40.6	0.02
20	SLD 10	-914	-11	5247	10.93	-40.6	0.02
20	SLD 11	-356	5	2805	-2.3	-19.04	-0.03
20	SLD 12	-356	5	2805	-2.3	-19.04	-0.03
20	SLD 13	-876	-10	4791	10.92	-41.15	-0.01
20	SLD 14	-876	-10	4791	10.92	-41.15	-0.01
20	SLD 15	-709	-5	4059	6.95	-34.68	-0.03
20	SLD 16	-709	-5	4059	6.95	-34.68	-0.03
20	SLV 1	-248	9	3388	-8.37	-7.32	0.06
20	SLV 2	-248	9	3388	-8.37	-7.32	0.06
20	SLV 3	142	20	1671	-17.84	7.78	0.03
20	SLV 4	142	20	1671	-17.84	7.78	0.03
20	SLV 5	-1064	-15	6320	13.48	-43.55	0.07
20	SLV 6	-1064	-15	6320	13.48	-43.55	0.07
20	SLV 7	237	23	595	-18.07	6.81	-0.04
20	SLV 8	237	23	595	-18.07	6.81	-0.04
20	SLV 9	-1373	-25	7116	22.74	-59.49	0.04
20	SLV 10	-1373	-25	7116	22.74	-59.49	0.04
20	SLV 11	-72	14	1391	-8.8	-9.14	-0.07
20	SLV 12	-72	14	1391	-8.8	-9.14	-0.07
20	SLV 13	-1278	-22	6040	22.51	-60.47	-0.03
20	SLV 14	-1278	-22	6040	22.51	-60.47	-0.03
20	SLV 15	-888	-11	4323	13.05	-45.36	-0.06
20	SLV 16	-888	-11	4323	13.05	-45.36	-0.06
21	SLU 1	-538	-10	3312	5.74	-17.83	-0.03
21	SLU 2	-552	-7	3277	3.32	-18.31	-0.02
21	SLU 3	-548	-10	3361	5.85	-18.16	-0.03
21	SLU 4	-556	-8	3340	4.4	-18.45	-0.02
21	SLU 5	-559	-7	3317	3.4	-18.51	-0.02
21	SLU 6	-555	-10	3400	5.93	-18.37	-0.03
21	SLU 7	-564	-8	3380	4.48	-18.65	-0.02
21	SLU 8	-552	-10	3391	5.9	-18.25	-0.03
21	SLU 9	-561	-8	3370	4.44	-18.53	-0.02
21	SLU 10	-622	-8	3621	3.95	-20.74	-0.02
21	SLU 11	-618	-11	3704	6.49	-20.6	-0.03
21	SLU 12	-626	-9	3683	5.03	-20.88	-0.03
21	SLU 13	-629	-8	3660	4.03	-20.95	-0.02
21	SLU 14	-625	-11	3743	6.57	-20.8	-0.03
21	SLU 15	-633	-9	3723	5.11	-21.09	-0.03
21	SLU 16	-622	-11	3734	6.53	-20.68	-0.03
21	SLU 17	-630	-9	3714	5.08	-20.96	-0.03
21	SLU 18	-637	-11	3802	6.65	-21.31	-0.03
21	SLU 19	-646	-10	3781	5.2	-21.59	-0.03
21	SLU 20	-645	-12	3842	6.73	-21.52	-0.03
21	SLU 21	-653	-10	3821	5.27	-21.8	-0.03

Nodo	Cont.	Reazione a traslazione			Reazione a rotazione		
Ind.	N.br.	x	y	z	x	y	z
21	SLU 22	-587	-11	3573	6.21	-19.49	-0.03
21	SLU 23	-601	-8	3538	3.79	-19.97	-0.02
21	SLU 24	-598	-11	3622	6.32	-19.82	-0.03
21	SLU 25	-606	-9	3601	4.87	-20.11	-0.03
21	SLU 26	-609	-8	3578	3.87	-20.17	-0.02
21	SLU 27	-605	-11	3661	6.4	-20.03	-0.03
21	SLU 28	-613	-9	3641	4.95	-20.31	-0.03
21	SLU 29	-602	-11	3652	6.37	-19.91	-0.03
21	SLU 30	-610	-9	3631	4.92	-20.19	-0.03
21	SLU 31	-671	-9	3882	4.43	-22.4	-0.03
21	SLU 32	-667	-12	3965	6.96	-22.26	-0.03
21	SLU 33	-676	-10	3944	5.51	-22.54	-0.03
21	SLU 34	-678	-9	3921	4.51	-22.6	-0.03
21	SLU 35	-675	-12	4005	7.04	-22.46	-0.03
21	SLU 36	-683	-10	3984	5.59	-22.75	-0.03
21	SLU 37	-672	-12	3995	7.01	-22.34	-0.03
21	SLU 38	-680	-10	3975	5.55	-22.62	-0.03
21	SLU 39	-687	-12	4063	7.12	-22.97	-0.04
21	SLU 40	-695	-10	4043	5.67	-23.25	-0.03
21	SLU 41	-694	-12	4103	7.2	-23.17	-0.04
21	SLU 42	-703	-10	4082	5.75	-23.46	-0.03
21	SLU 43	-682	-12	4216	7.3	-22.61	-0.04
21	SLU 44	-696	-9	4181	4.88	-23.09	-0.03
21	SLU 45	-692	-13	4265	7.41	-22.95	-0.04
21	SLU 46	-701	-11	4244	5.96	-23.23	-0.03
21	SLU 47	-703	-10	4221	4.96	-23.29	-0.03
21	SLU 48	-700	-13	4304	7.49	-23.15	-0.04
21	SLU 49	-708	-11	4284	6.04	-23.44	-0.03
21	SLU 50	-697	-13	4295	7.46	-23.03	-0.04
21	SLU 51	-705	-11	4274	6	-23.31	-0.03
21	SLU 52	-766	-10	4525	5.51	-25.52	-0.03
21	SLU 53	-762	-14	4608	8.05	-25.38	-0.04
21	SLU 54	-770	-12	4587	6.59	-25.66	-0.03
21	SLU 55	-773	-11	4564	5.59	-25.73	-0.03
21	SLU 56	-769	-14	4647	8.13	-25.58	-0.04
21	SLU 57	-778	-12	4627	6.67	-25.87	-0.04
21	SLU 58	-766	-14	4638	8.09	-25.46	-0.04
21	SLU 59	-775	-12	4617	6.64	-25.74	-0.03
21	SLU 60	-782	-14	4706	8.21	-26.09	-0.04
21	SLU 61	-790	-12	4685	6.76	-26.37	-0.04
21	SLU 62	-789	-14	4746	8.29	-26.3	-0.04
21	SLU 63	-797	-12	4725	6.83	-26.58	-0.04
21	SLU 64	-732	-13	4477	7.77	-24.27	-0.04
21	SLU 65	-746	-10	4442	5.35	-24.75	-0.03
21	SLU 66	-742	-13	4526	7.88	-24.6	-0.04
21	SLU 67	-750	-12	4505	6.43	-24.89	-0.03
21	SLU 68	-753	-10	4482	5.43	-24.95	-0.03
21	SLU 69	-749	-14	4565	7.96	-24.81	-0.04
21	SLU 70	-758	-12	4545	6.51	-25.09	-0.03
21	SLU 71	-746	-14	4556	7.93	-24.69	-0.04
21	SLU 72	-755	-12	4535	6.48	-24.97	-0.03
21	SLU 73	-815	-11	4786	5.99	-27.18	-0.03
21	SLU 74	-812	-15	4869	8.52	-27.04	-0.04
21	SLU 75	-820	-13	4848	7.07	-27.32	-0.04
21	SLU 76	-823	-11	4825	6.07	-27.39	-0.03
21	SLU 77	-819	-15	4909	8.6	-27.24	-0.04
21	SLU 78	-827	-13	4888	7.15	-27.53	-0.04
21	SLU 79	-816	-15	4899	8.57	-27.12	-0.04
21	SLU 80	-824	-13	4879	7.11	-27.4	-0.04
21	SLU 81	-831	-15	4967	8.68	-27.75	-0.04
21	SLU 82	-840	-13	4947	7.23	-28.03	-0.04
21	SLU 83	-839	-15	5007	8.76	-27.96	-0.04
21	SLU 84	-847	-13	4986	7.31	-28.24	-0.04
21	SLE RA 1	-552	-10	3386	5.88	-18.31	-0.03
21	SLE RA 2	-561	-8	3363	4.26	-18.62	-0.02
21	SLE RA 3	-559	-10	3419	5.95	-18.53	-0.03
21	SLE RA 4	-564	-9	3405	4.98	-18.72	-0.03
21	SLE RA 5	-566	-8	3390	4.31	-18.76	-0.02
21	SLE RA 6	-564	-10	3445	6	-18.67	-0.03
21	SLE RA 7	-569	-9	3432	5.03	-18.85	-0.03
21	SLE RA 8	-562	-10	3439	5.98	-18.58	-0.03
21	SLE RA 9	-567	-9	3425	5.01	-18.77	-0.03
21	SLE RA 10	-608	-9	3592	4.68	-20.24	-0.03
21	SLE RA 11	-605	-11	3648	6.37	-20.15	-0.03
21	SLE RA 12	-611	-10	3634	5.4	-20.34	-0.03
21	SLE RA 13	-613	-9	3619	4.74	-20.38	-0.03
21	SLE RA 14	-610	-11	3674	6.43	-20.29	-0.03
21	SLE RA 15	-616	-10	3660	5.46	-20.48	-0.03
21	SLE RA 16	-608	-11	3668	6.41	-20.2	-0.03
21	SLE RA 17	-614	-10	3654	5.44	-20.39	-0.03
21	SLE RA 18	-618	-11	3713	6.48	-20.62	-0.03
21	SLE RA 19	-624	-10	3699	5.51	-20.81	-0.03
21	SLE RA 20	-623	-11	3740	6.53	-20.76	-0.03
21	SLE RA 21	-629	-10	3726	5.57	-20.95	-0.03
21	SLE FR 1	-552	-10	3386	5.88	-18.31	-0.03
21	SLE FR 2	-554	-10	3382	5.55	-18.37	-0.03
21	SLE FR 3	-554	-10	3397	5.9	-18.36	-0.03
21	SLE FR 4	-574	-10	3480	5.74	-19.07	-0.03
21	SLE FR 5	-574	-10	3495	6.08	-19.06	-0.03
21	SLE FR 6	-585	-11	3550	6.18	-19.47	-0.03
21	SLE QP 1	-552	-10	3386	5.88	-18.31	-0.03

Nodo	Cont.	Reazione a traslazione			Reazione a rotazione		
Ind.	N.br.	x	y	z	x	y	z
21	SLE QP 2	-572	-10	3484	6.06	-19	-0.03
21	SLD 1	-416	0	3223	-1.41	-11.6	0
21	SLD 2	-416	0	3223	-1.41	-11.6	0
21	SLD 3	-240	6	2618	-6.75	-4.26	0.02
21	SLD 4	-240	6	2618	-6.75	-4.26	0.02
21	SLD 5	-792	-17	4323	11.92	-27.91	-0.05
21	SLD 6	-792	-17	4323	11.92	-27.91	-0.05
21	SLD 7	-206	4	2308	-5.89	-3.45	0.02
21	SLD 8	-206	4	2308	-5.89	-3.45	0.02
21	SLD 9	-938	-25	4661	18	-34.56	-0.08
21	SLD 10	-938	-25	4661	18	-34.56	-0.08
21	SLD 11	-352	-4	2646	0.2	-10.09	-0.01
21	SLD 12	-352	-4	2646	0.2	-10.09	-0.01
21	SLD 13	-904	-27	4350	18.87	-33.74	-0.08
21	SLD 14	-904	-27	4350	18.87	-33.74	-0.08
21	SLD 15	-728	-20	3746	13.53	-26.4	-0.06
21	SLD 16	-728	-20	3746	13.53	-26.4	-0.06
21	SLV 1	-217	13	2877	-11.26	-2.2	0.05
21	SLV 2	-217	13	2877	-11.26	-2.2	0.05
21	SLV 3	193	28	1456	-24.05	14.9	0.1
21	SLV 4	193	28	1456	-24.05	14.9	0.1
21	SLV 5	-1087	-26	5457	20.27	-39.91	-0.08
21	SLV 6	-1087	-26	5457	20.27	-39.91	-0.08
21	SLV 7	279	24	721	-22.38	17.12	0.08
21	SLV 8	279	24	721	-22.38	17.12	0.08
21	SLV 9	-1423	-45	6247	34.5	-55.12	-0.14
21	SLV 10	-1423	-45	6247	34.5	-55.12	-0.14
21	SLV 11	-57	6	1512	-8.15	1.91	0.02
21	SLV 12	-57	6	1512	-8.15	1.91	0.02
21	SLV 13	-1337	-49	5512	36.17	-52.91	-0.16
21	SLV 14	-1337	-49	5512	36.17	-52.91	-0.16
21	SLV 15	-927	-34	4092	23.37	-35.8	-0.11
21	SLV 16	-927	-34	4092	23.37	-35.8	-0.11
22	SLU 1	-631	-13	2957	7.4	-33.04	-0.04
22	SLU 2	-647	-10	2915	4.64	-33.88	-0.03
22	SLU 3	-642	-14	2998	7.55	-33.64	-0.04
22	SLU 4	-652	-11	2973	5.89	-34.14	-0.03
22	SLU 5	-655	-10	2948	4.74	-34.35	-0.03
22	SLU 6	-650	-14	3032	7.65	-34.11	-0.04
22	SLU 7	-660	-12	3007	5.99	-34.61	-0.04
22	SLU 8	-648	-14	3024	7.61	-33.99	-0.04
22	SLU 9	-657	-12	2999	5.95	-34.49	-0.04
22	SLU 10	-725	-11	3213	5.47	-37.86	-0.03
22	SLU 11	-721	-15	3297	8.37	-37.62	-0.05
22	SLU 12	-730	-13	3271	6.72	-38.12	-0.04
22	SLU 13	-734	-11	3247	5.57	-38.33	-0.03
22	SLU 14	-729	-15	3330	8.48	-38.09	-0.05
22	SLU 15	-739	-13	3305	6.82	-38.59	-0.04
22	SLU 16	-726	-15	3323	8.44	-37.97	-0.05
22	SLU 17	-736	-13	3297	6.78	-38.47	-0.04
22	SLU 18	-743	-15	3383	8.59	-38.73	-0.05
22	SLU 19	-753	-13	3358	6.93	-39.23	-0.04
22	SLU 20	-751	-16	3417	8.69	-39.2	-0.05
22	SLU 21	-761	-14	3391	7.03	-39.7	-0.04
22	SLU 22	-688	-14	3186	8.03	-36.04	-0.04
22	SLU 23	-704	-11	3143	5.27	-36.88	-0.03
22	SLU 24	-700	-15	3227	8.17	-36.64	-0.05
22	SLU 25	-709	-13	3201	6.52	-37.14	-0.04
22	SLU 26	-713	-11	3177	5.37	-37.35	-0.03
22	SLU 27	-708	-15	3261	8.28	-37.11	-0.05
22	SLU 28	-718	-13	3235	6.62	-37.61	-0.04
22	SLU 29	-705	-15	3253	8.24	-36.99	-0.05
22	SLU 30	-715	-13	3228	6.58	-37.49	-0.04
22	SLU 31	-783	-12	3442	6.1	-40.86	-0.04
22	SLU 32	-778	-16	3525	9	-40.62	-0.05
22	SLU 33	-788	-14	3500	7.34	-41.12	-0.04
22	SLU 34	-791	-13	3475	6.2	-41.33	-0.04
22	SLU 35	-787	-16	3559	9.11	-41.09	-0.05
22	SLU 36	-796	-14	3533	7.45	-41.59	-0.04
22	SLU 37	-784	-16	3551	9.07	-40.97	-0.05
22	SLU 38	-793	-14	3526	7.41	-41.47	-0.04
22	SLU 39	-800	-17	3612	9.21	-41.73	-0.05
22	SLU 40	-810	-14	3586	7.56	-42.23	-0.04
22	SLU 41	-809	-17	3645	9.32	-42.2	-0.05
22	SLU 42	-819	-15	3620	7.66	-42.7	-0.04
22	SLU 43	-800	-17	3766	9.41	-41.93	-0.05
22	SLU 44	-816	-13	3723	6.64	-42.77	-0.04
22	SLU 45	-811	-17	3807	9.55	-42.53	-0.05
22	SLU 46	-821	-15	3782	7.89	-43.03	-0.05
22	SLU 47	-825	-14	3757	6.75	-43.24	-0.04
22	SLU 48	-820	-17	3841	9.66	-43	-0.05
22	SLU 49	-830	-15	3815	8	-43.5	-0.05
22	SLU 50	-817	-17	3833	9.61	-42.88	-0.05
22	SLU 51	-827	-15	3808	7.96	-43.38	-0.05
22	SLU 52	-895	-15	4022	7.47	-46.75	-0.05
22	SLU 53	-890	-19	4105	10.38	-46.5	-0.06
22	SLU 54	-900	-17	4080	8.72	-47.01	-0.05
22	SLU 55	-903	-15	4055	7.58	-47.22	-0.05
22	SLU 56	-899	-19	4139	10.48	-46.98	-0.06
22	SLU 57	-908	-17	4114	8.83	-47.48	-0.05
22	SLU 58	-896	-19	4131	10.44	-46.86	-0.06

Nodo	Cont.	Reazione a traslazione			Reazione a rotazione		
Ind.	N.br.	x	y	z	x	y	z
22	SLU 59	-905	-17	4106	8.79	-47.36	-0.05
22	SLU 60	-912	-19	4192	10.59	-47.62	-0.06
22	SLU 61	-922	-17	4166	8.93	-48.12	-0.05
22	SLU 62	-921	-19	4225	10.7	-48.09	-0.06
22	SLU 63	-931	-17	4200	9.04	-48.59	-0.05
22	SLU 64	-858	-18	3994	10.03	-44.93	-0.06
22	SLU 65	-874	-15	3952	7.27	-45.76	-0.04
22	SLU 66	-869	-18	4036	10.18	-45.52	-0.06
22	SLU 67	-879	-16	4010	8.52	-46.02	-0.05
22	SLU 68	-882	-15	3986	7.38	-46.24	-0.04
22	SLU 69	-877	-18	4069	10.28	-46	-0.06
22	SLU 70	-887	-16	4044	8.62	-46.5	-0.05
22	SLU 71	-875	-18	4062	10.24	-45.87	-0.06
22	SLU 72	-884	-16	4036	8.58	-46.38	-0.05
22	SLU 73	-952	-16	4250	8.1	-49.74	-0.05
22	SLU 74	-948	-20	4334	11.01	-49.5	-0.06
22	SLU 75	-957	-18	4308	9.35	-50	-0.05
22	SLU 76	-961	-16	4284	8.2	-50.22	-0.05
22	SLU 77	-956	-20	4368	11.11	-49.98	-0.06
22	SLU 78	-966	-18	4342	9.45	-50.48	-0.05
22	SLU 79	-953	-20	4360	11.07	-49.85	-0.06
22	SLU 80	-963	-18	4335	9.41	-50.36	-0.05
22	SLU 81	-970	-20	4420	11.22	-50.61	-0.06
22	SLU 82	-980	-18	4395	9.56	-51.11	-0.06
22	SLU 83	-978	-20	4454	11.32	-51.09	-0.06
22	SLU 84	-988	-18	4429	9.66	-51.59	-0.06
22	SLE RA 1	-647	-14	3022	7.58	-33.9	-0.04
22	SLE RA 2	-658	-11	2994	5.74	-34.46	-0.03
22	SLE RA 3	-655	-14	3050	7.68	-34.3	-0.04
22	SLE RA 4	-661	-12	3033	6.57	-34.63	-0.04
22	SLE RA 5	-663	-11	3016	5.81	-34.77	-0.03
22	SLE RA 6	-660	-14	3072	7.75	-34.61	-0.04
22	SLE RA 7	-667	-13	3055	6.64	-34.95	-0.04
22	SLE RA 8	-658	-14	3067	7.72	-34.53	-0.04
22	SLE RA 9	-665	-12	3050	6.61	-34.87	-0.04
22	SLE RA 10	-710	-12	3193	6.29	-37.11	-0.04
22	SLE RA 11	-707	-15	3249	8.23	-36.95	-0.05
22	SLE RA 12	-714	-13	3232	7.12	-37.29	-0.04
22	SLE RA 13	-716	-12	3215	6.36	-37.43	-0.04
22	SLE RA 14	-713	-15	3271	8.3	-37.27	-0.05
22	SLE RA 15	-719	-14	3254	7.19	-37.6	-0.04
22	SLE RA 16	-711	-15	3266	8.27	-37.19	-0.05
22	SLE RA 17	-717	-13	3249	7.17	-37.52	-0.04
22	SLE RA 18	-722	-15	3306	8.37	-37.69	-0.05
22	SLE RA 19	-728	-14	3289	7.27	-38.03	-0.04
22	SLE RA 20	-728	-15	3329	8.44	-38.01	-0.05
22	SLE RA 21	-734	-14	3312	7.33	-38.34	-0.04
22	SLE FR 1	-647	-14	3022	7.58	-33.9	-0.04
22	SLE FR 2	-649	-13	3017	7.21	-34.01	-0.04
22	SLE FR 3	-649	-14	3031	7.61	-34.03	-0.04
22	SLE FR 4	-672	-14	3102	7.45	-35.15	-0.04
22	SLE FR 5	-672	-14	3116	7.84	-35.16	-0.04
22	SLE FR 6	-684	-14	3164	7.98	-35.8	-0.04
22	SLE QP 1	-647	-14	3022	7.58	-33.9	-0.04
22	SLE QP 2	-670	-14	3107	7.82	-35.04	-0.04
22	SLD 1	-456	-1	2800	-1.37	-23.61	0
22	SLD 2	-456	-1	2800	-1.37	-23.61	0
22	SLD 3	-282	7	2303	-7.69	-16.18	0.03
22	SLD 4	-282	7	2303	-7.69	-16.18	0.03
22	SLD 5	-868	-22	3770	14.64	-42.88	-0.07
22	SLD 6	-868	-22	3770	14.64	-42.88	-0.07
22	SLD 7	-291	4	2112	-6.42	-18.11	0.02
22	SLD 8	-291	4	2112	-6.42	-18.11	0.02
22	SLD 9	-1048	-32	4103	22.05	-51.97	-0.11
22	SLD 10	-1048	-32	4103	22.05	-51.97	-0.11
22	SLD 11	-471	-7	2445	0.99	-27.19	-0.01
22	SLD 12	-471	-7	2445	0.99	-27.19	-0.01
22	SLD 13	-1057	-35	3912	23.32	-53.9	-0.12
22	SLD 14	-1057	-35	3912	23.32	-53.9	-0.12
22	SLD 15	-884	-28	3415	17.01	-46.47	-0.09
22	SLD 16	-884	-28	3415	17.01	-46.47	-0.09
22	SLV 1	-179	17	2393	-13.46	-8.79	0.07
22	SLV 2	-179	17	2393	-13.46	-8.79	0.07
22	SLV 3	226	36	1219	-28.63	8.64	0.13
22	SLV 4	226	36	1219	-28.63	8.64	0.13
22	SLV 5	-1136	-33	4673	24.45	-53.61	-0.12
22	SLV 6	-1136	-33	4673	24.45	-53.61	-0.12
22	SLV 7	213	29	761	-26.14	4.51	0.11
22	SLV 8	213	29	761	-26.14	4.51	0.11
22	SLV 9	-1552	-57	5454	41.77	-74.59	-0.2
22	SLV 10	-1552	-57	5454	41.77	-74.59	-0.2
22	SLV 11	-203	5	1542	-8.82	-16.47	0.03
22	SLV 12	-203	5	1542	-8.82	-16.47	0.03
22	SLV 13	-1565	-64	4996	44.27	-78.72	-0.22
22	SLV 14	-1565	-64	4996	44.27	-78.72	-0.22
22	SLV 15	-1160	-45	3822	29.09	-61.29	-0.15
22	SLV 16	-1160	-45	3822	29.09	-61.29	-0.15
23	SLU 1	-448	-12	2708	7.19	-10.14	-0.04
23	SLU 2	-461	-9	2659	4.41	-10.48	-0.03
23	SLU 3	-455	-13	2745	7.33	-10.28	-0.04
23	SLU 4	-463	-10	2715	5.67	-10.48	-0.03

Nodo	Cont.	Reazione a traslazione			Reazione a rotazione		
Ind.	N.br.	x	y	z	x	y	z
23	SLU 5	-465	-9	2689	4.52	-10.5	-0.03
23	SLU 6	-460	-13	2774	7.43	-10.31	-0.04
23	SLU 7	-468	-11	2744	5.77	-10.51	-0.03
23	SLU 8	-457	-13	2768	7.39	-10.2	-0.04
23	SLU 9	-465	-11	2738	5.73	-10.4	-0.03
23	SLU 10	-519	-10	2924	5.22	-12.01	-0.03
23	SLU 11	-514	-14	3010	8.14	-11.82	-0.05
23	SLU 12	-521	-12	2980	6.47	-12.02	-0.04
23	SLU 13	-524	-10	2954	5.32	-12.04	-0.03
23	SLU 14	-518	-14	3040	8.24	-11.85	-0.05
23	SLU 15	-526	-12	3010	6.58	-12.05	-0.04
23	SLU 16	-516	-14	3034	8.2	-11.73	-0.05
23	SLU 17	-523	-12	3004	6.54	-11.93	-0.04
23	SLU 18	-531	-14	3088	8.34	-12.34	-0.05
23	SLU 19	-539	-12	3058	6.68	-12.54	-0.04
23	SLU 20	-536	-14	3118	8.44	-12.36	-0.05
23	SLU 21	-544	-12	3088	6.78	-12.56	-0.04
23	SLU 22	-489	-13	2914	7.8	-11.1	-0.04
23	SLU 23	-502	-10	2864	5.03	-11.43	-0.03
23	SLU 24	-496	-14	2950	7.95	-11.24	-0.05
23	SLU 25	-504	-11	2920	6.28	-11.44	-0.04
23	SLU 26	-506	-10	2894	5.13	-11.46	-0.03
23	SLU 27	-501	-14	2980	8.05	-11.26	-0.05
23	SLU 28	-509	-12	2950	6.38	-11.46	-0.04
23	SLU 29	-498	-14	2974	8.01	-11.15	-0.05
23	SLU 30	-506	-12	2944	6.34	-11.35	-0.04
23	SLU 31	-560	-11	3130	5.84	-12.96	-0.04
23	SLU 32	-555	-15	3216	8.75	-12.77	-0.05
23	SLU 33	-562	-13	3186	7.09	-12.97	-0.04
23	SLU 34	-565	-11	3160	5.94	-12.99	-0.04
23	SLU 35	-559	-15	3246	8.85	-12.8	-0.05
23	SLU 36	-567	-13	3216	7.19	-13	-0.04
23	SLU 37	-557	-15	3240	8.81	-12.68	-0.05
23	SLU 38	-564	-13	3210	7.15	-12.88	-0.04
23	SLU 39	-572	-15	3294	8.95	-13.29	-0.05
23	SLU 40	-580	-13	3264	7.29	-13.49	-0.04
23	SLU 41	-577	-16	3324	9.06	-13.31	-0.05
23	SLU 42	-585	-13	3294	7.39	-13.51	-0.04
23	SLU 43	-568	-16	3450	9.13	-12.86	-0.05
23	SLU 44	-581	-12	3401	6.36	-13.19	-0.04
23	SLU 45	-576	-16	3486	9.28	-13	-0.05
23	SLU 46	-583	-14	3457	7.61	-13.2	-0.04
23	SLU 47	-586	-12	3431	6.46	-13.22	-0.04
23	SLU 48	-580	-16	3516	9.38	-13.03	-0.05
23	SLU 49	-588	-14	3486	7.71	-13.23	-0.05
23	SLU 50	-578	-16	3510	9.34	-12.91	-0.05
23	SLU 51	-585	-14	3480	7.67	-13.11	-0.05
23	SLU 52	-640	-13	3666	7.17	-14.73	-0.04
23	SLU 53	-634	-17	3752	10.08	-14.54	-0.06
23	SLU 54	-642	-15	3722	8.42	-14.74	-0.05
23	SLU 55	-644	-14	3696	7.27	-14.76	-0.04
23	SLU 56	-639	-17	3782	10.18	-14.56	-0.06
23	SLU 57	-646	-15	3752	8.52	-14.76	-0.05
23	SLU 58	-636	-17	3776	10.14	-14.45	-0.06
23	SLU 59	-644	-15	3746	8.48	-14.65	-0.05
23	SLU 60	-652	-18	3830	10.28	-15.05	-0.06
23	SLU 61	-659	-15	3800	8.62	-15.25	-0.05
23	SLU 62	-656	-18	3860	10.39	-15.08	-0.06
23	SLU 63	-664	-16	3830	8.72	-15.28	-0.05
23	SLU 64	-609	-17	3656	9.75	-13.81	-0.06
23	SLU 65	-622	-13	3606	6.97	-14.15	-0.04
23	SLU 66	-617	-17	3692	9.89	-13.95	-0.06
23	SLU 67	-624	-15	3662	8.23	-14.15	-0.05
23	SLU 68	-627	-13	3636	7.08	-14.17	-0.04
23	SLU 69	-621	-17	3722	9.99	-13.98	-0.06
23	SLU 70	-629	-15	3692	8.33	-14.18	-0.05
23	SLU 71	-619	-17	3716	9.95	-13.87	-0.06
23	SLU 72	-626	-15	3686	8.29	-14.07	-0.05
23	SLU 73	-681	-15	3872	7.78	-15.68	-0.05
23	SLU 74	-675	-18	3958	10.7	-15.49	-0.06
23	SLU 75	-683	-16	3928	9.03	-15.69	-0.05
23	SLU 76	-685	-15	3902	7.88	-15.71	-0.05
23	SLU 77	-680	-18	3988	10.8	-15.51	-0.06
23	SLU 78	-687	-16	3958	9.14	-15.71	-0.05
23	SLU 79	-677	-18	3982	10.76	-15.4	-0.06
23	SLU 80	-685	-16	3952	9.1	-15.6	-0.05
23	SLU 81	-693	-19	4036	10.9	-16	-0.06
23	SLU 82	-700	-17	4006	9.24	-16.21	-0.05
23	SLU 83	-697	-19	4066	11	-16.03	-0.06
23	SLU 84	-705	-17	4036	9.34	-16.23	-0.05
23	SLE RA 1	-460	-13	2767	7.36	-10.42	-0.04
23	SLE RA 2	-468	-10	2734	5.51	-10.64	-0.03
23	SLE RA 3	-465	-13	2791	7.46	-10.51	-0.04
23	SLE RA 4	-470	-11	2771	6.35	-10.64	-0.04
23	SLE RA 5	-471	-10	2754	5.58	-10.66	-0.03
23	SLE RA 6	-468	-13	2811	7.53	-10.53	-0.04
23	SLE RA 7	-473	-11	2791	6.42	-10.66	-0.04
23	SLE RA 8	-466	-13	2807	7.5	-10.45	-0.04
23	SLE RA 9	-471	-11	2787	6.39	-10.58	-0.04
23	SLE RA 10	-507	-11	2911	6.05	-11.66	-0.04
23	SLE RA 11	-504	-14	2968	8	-11.53	-0.05

Nodo	Cont.	Reazione a traslazione			Reazione a rotazione		
Ind.	N.br.	x	y	z	x	y	z
23	SLE RA 12	-509	-12	2948	6.89	-11.67	-0.04
23	SLE RA 13	-510	-11	2931	6.12	-11.68	-0.04
23	SLE RA 14	-507	-14	2988	8.06	-11.55	-0.05
23	SLE RA 15	-512	-12	2968	6.96	-11.68	-0.04
23	SLE RA 16	-505	-14	2984	8.04	-11.47	-0.05
23	SLE RA 17	-510	-12	2964	6.93	-11.61	-0.04
23	SLE RA 18	-515	-14	3020	8.13	-11.88	-0.05
23	SLE RA 19	-520	-13	3000	7.02	-12.01	-0.04
23	SLE RA 20	-518	-14	3040	8.2	-11.89	-0.05
23	SLE RA 21	-524	-13	3020	7.09	-12.03	-0.04
23	SLE FR 1	-460	-13	2767	7.36	-10.42	-0.04
23	SLE FR 2	-461	-12	2761	6.99	-10.46	-0.04
23	SLE FR 3	-461	-13	2775	7.39	-10.42	-0.04
23	SLE FR 4	-478	-13	2837	7.22	-10.9	-0.04
23	SLE FR 5	-478	-13	2851	7.62	-10.86	-0.04
23	SLE FR 6	-488	-13	2894	7.75	-11.15	-0.04
23	SLE QP 1	-460	-13	2767	7.36	-10.42	-0.04
23	SLE QP 2	-476	-13	2843	7.59	-10.85	-0.04
23	SLD 1	-239	1	2495	-1.74	-0.59	0.01
23	SLD 2	-239	1	2495	-1.74	-0.59	0.01
23	SLD 3	-85	9	2075	-8.43	5.45	0.04
23	SLD 4	-85	9	2075	-8.43	5.45	0.04
23	SLD 5	-639	-22	3377	14.94	-16.93	-0.08
23	SLD 6	-639	-22	3377	14.94	-16.93	-0.08
23	SLD 7	-125	7	1974	-7.36	3.19	0.04
23	SLD 8	-125	7	1974	-7.36	3.19	0.04
23	SLD 9	-828	-33	3712	22.55	-24.9	-0.12
23	SLD 10	-828	-33	3712	22.55	-24.9	-0.12
23	SLD 11	-314	-4	2309	0.25	-4.78	-0.01
23	SLD 12	-314	-4	2309	0.25	-4.78	-0.01
23	SLD 13	-868	-35	3612	23.62	-27.16	-0.13
23	SLD 14	-868	-35	3612	23.62	-27.16	-0.13
23	SLD 15	-714	-27	3191	16.93	-21.12	-0.09
23	SLD 16	-714	-27	3191	16.93	-21.12	-0.09
23	SLV 1	67	19	2039	-14	12.53	0.07
23	SLV 2	67	19	2039	-14	12.53	0.07
23	SLV 3	428	39	1038	-30.1	26.62	0.16
23	SLV 4	428	39	1038	-30.1	26.62	0.16
23	SLV 5	-861	-35	4120	25.52	-25.22	-0.14
23	SLV 6	-861	-35	4120	25.52	-25.22	-0.14
23	SLV 7	343	34	784	-28.12	21.77	0.15
23	SLV 8	343	34	784	-28.12	21.77	0.15
23	SLV 9	-1295	-60	4903	43.31	-43.48	-0.23
23	SLV 10	-1295	-60	4903	43.31	-43.48	-0.23
23	SLV 11	-92	9	1567	-10.33	3.51	0.05
23	SLV 12	-92	9	1567	-10.33	3.51	0.05
23	SLV 13	-1381	-65	4649	45.28	-48.33	-0.25
23	SLV 14	-1381	-65	4649	45.28	-48.33	-0.25
23	SLV 15	-1020	-45	3648	29.19	-34.24	-0.16
23	SLV 16	-1020	-45	3648	29.19	-34.24	-0.16
24	SLU 1	-579	-9	2512	5.58	-35.83	-0.03
24	SLU 2	-595	-5	2453	3.13	-36.74	-0.02
24	SLU 3	-588	-9	2544	5.69	-36.42	-0.03
24	SLU 4	-598	-7	2508	4.22	-36.97	-0.02
24	SLU 5	-602	-6	2480	3.21	-37.22	-0.02
24	SLU 6	-595	-9	2571	5.77	-36.91	-0.03
24	SLU 7	-605	-7	2535	4.3	-37.46	-0.02
24	SLU 8	-592	-9	2566	5.74	-36.8	-0.03
24	SLU 9	-602	-7	2531	4.27	-37.34	-0.02
24	SLU 10	-666	-6	2692	3.76	-40.93	-0.02
24	SLU 11	-659	-10	2783	6.31	-40.62	-0.03
24	SLU 12	-669	-8	2748	4.85	-41.16	-0.03
24	SLU 13	-673	-6	2719	3.84	-41.41	-0.02
24	SLU 14	-666	-10	2810	6.4	-41.1	-0.03
24	SLU 15	-676	-8	2775	4.93	-41.65	-0.03
24	SLU 16	-663	-10	2805	6.36	-40.99	-0.03
24	SLU 17	-673	-8	2770	4.89	-41.53	-0.03
24	SLU 18	-680	-10	2854	6.47	-41.81	-0.04
24	SLU 19	-690	-8	2818	5	-42.36	-0.03
24	SLU 20	-687	-10	2881	6.55	-42.3	-0.04
24	SLU 21	-697	-8	2845	5.08	-42.84	-0.03
24	SLU 22	-631	-9	2699	6.06	-39.04	-0.03
24	SLU 23	-648	-6	2641	3.61	-39.95	-0.02
24	SLU 24	-640	-9	2731	6.17	-39.64	-0.03
24	SLU 25	-650	-8	2696	4.7	-40.19	-0.03
24	SLU 26	-654	-6	2668	3.69	-40.44	-0.02
24	SLU 27	-647	-10	2759	6.25	-40.13	-0.03
24	SLU 28	-657	-8	2723	4.78	-40.67	-0.03
24	SLU 29	-644	-10	2754	6.22	-40.01	-0.03
24	SLU 30	-654	-8	2718	4.75	-40.56	-0.03
24	SLU 31	-718	-7	2880	4.23	-44.14	-0.02
24	SLU 32	-711	-10	2971	6.79	-43.83	-0.04
24	SLU 33	-721	-9	2935	5.33	-44.38	-0.03
24	SLU 34	-725	-7	2907	4.32	-44.63	-0.02
24	SLU 35	-718	-11	2998	6.87	-44.32	-0.04
24	SLU 36	-728	-9	2963	5.41	-44.86	-0.03
24	SLU 37	-715	-11	2993	6.84	-44.2	-0.04
24	SLU 38	-725	-9	2958	5.37	-44.75	-0.03
24	SLU 39	-732	-11	3041	6.95	-45.03	-0.04
24	SLU 40	-742	-9	3006	5.48	-45.57	-0.03
24	SLU 41	-739	-11	3069	7.03	-45.51	-0.04

Nodo	Cont.	Reazione a traslazione			Reazione a rotazione		
Ind.	N.br.	x	y	z	x	y	z
24	SLU 42	-749	-9	3033	5.56	-46.06	-0.03
24	SLU 43	-735	-11	3201	7.08	-45.47	-0.04
24	SLU 44	-751	-8	3142	4.64	-46.38	-0.03
24	SLU 45	-744	-11	3233	7.2	-46.07	-0.04
24	SLU 46	-754	-9	3197	5.73	-46.62	-0.03
24	SLU 47	-758	-8	3169	4.72	-46.87	-0.03
24	SLU 48	-751	-11	3260	7.28	-46.56	-0.04
24	SLU 49	-760	-9	3225	5.81	-47.1	-0.03
24	SLU 50	-748	-11	3255	7.25	-46.44	-0.04
24	SLU 51	-758	-9	3220	5.78	-46.99	-0.03
24	SLU 52	-822	-9	3381	5.26	-50.57	-0.03
24	SLU 53	-815	-12	3472	7.82	-50.26	-0.04
24	SLU 54	-825	-10	3437	6.36	-50.81	-0.04
24	SLU 55	-829	-9	3408	5.34	-51.06	-0.03
24	SLU 56	-821	-12	3499	7.9	-50.75	-0.04
24	SLU 57	-831	-10	3464	6.44	-51.29	-0.04
24	SLU 58	-819	-12	3494	7.87	-50.63	-0.04
24	SLU 59	-829	-10	3459	6.4	-51.18	-0.04
24	SLU 60	-836	-12	3543	7.98	-51.46	-0.04
24	SLU 61	-846	-10	3507	6.51	-52	-0.04
24	SLU 62	-843	-12	3570	8.06	-51.94	-0.04
24	SLU 63	-852	-10	3535	6.59	-52.49	-0.04
24	SLU 64	-787	-12	3389	7.56	-48.69	-0.04
24	SLU 65	-803	-8	3330	5.12	-49.6	-0.03
24	SLU 66	-796	-12	3421	7.68	-49.29	-0.04
24	SLU 67	-806	-10	3385	6.21	-49.83	-0.03
24	SLU 68	-810	-9	3357	5.2	-50.08	-0.03
24	SLU 69	-803	-12	3448	7.76	-49.77	-0.04
24	SLU 70	-813	-10	3412	6.29	-50.32	-0.03
24	SLU 71	-800	-12	3443	7.73	-49.66	-0.04
24	SLU 72	-810	-10	3407	6.26	-50.2	-0.03
24	SLU 73	-874	-9	3569	5.74	-53.79	-0.03
24	SLU 74	-867	-13	3660	8.3	-53.48	-0.05
24	SLU 75	-877	-11	3625	6.84	-54.02	-0.04
24	SLU 76	-881	-10	3596	5.82	-54.27	-0.03
24	SLU 77	-874	-13	3687	8.38	-53.96	-0.05
24	SLU 78	-884	-11	3652	6.92	-54.51	-0.04
24	SLU 79	-871	-13	3682	8.35	-53.85	-0.05
24	SLU 80	-881	-11	3647	6.88	-54.39	-0.04
24	SLU 81	-888	-13	3731	8.46	-54.67	-0.05
24	SLU 82	-898	-11	3695	6.99	-55.22	-0.04
24	SLU 83	-895	-13	3758	8.54	-55.16	-0.05
24	SLU 84	-905	-11	3722	7.07	-55.7	-0.04
24	SLE RA 1	-594	-9	2565	5.71	-36.74	-0.03
24	SLE RA 2	-605	-7	2526	4.08	-37.35	-0.02
24	SLE RA 3	-600	-9	2587	5.79	-37.14	-0.03
24	SLE RA 4	-607	-8	2563	4.81	-37.51	-0.03
24	SLE RA 5	-609	-7	2544	4.14	-37.67	-0.02
24	SLE RA 6	-604	-9	2605	5.84	-37.47	-0.03
24	SLE RA 7	-611	-8	2581	4.86	-37.83	-0.03
24	SLE RA 8	-603	-9	2601	5.82	-37.39	-0.03
24	SLE RA 9	-609	-8	2578	4.84	-37.76	-0.03
24	SLE RA 10	-652	-7	2686	4.5	-40.14	-0.03
24	SLE RA 11	-647	-10	2746	6.21	-39.94	-0.03
24	SLE RA 12	-654	-8	2723	5.23	-40.3	-0.03
24	SLE RA 13	-656	-7	2704	4.55	-40.47	-0.03
24	SLE RA 14	-652	-10	2764	6.26	-40.26	-0.03
24	SLE RA 15	-658	-8	2741	5.28	-40.63	-0.03
24	SLE RA 16	-650	-10	2761	6.24	-40.19	-0.03
24	SLE RA 17	-657	-8	2738	5.26	-40.55	-0.03
24	SLE RA 18	-661	-10	2793	6.31	-40.74	-0.03
24	SLE RA 19	-668	-8	2770	5.33	-41.1	-0.03
24	SLE RA 20	-666	-10	2811	6.36	-41.06	-0.03
24	SLE RA 21	-672	-9	2788	5.38	-41.42	-0.03
24	SLE FR 1	-594	-9	2565	5.71	-36.74	-0.03
24	SLE FR 2	-596	-8	2557	5.39	-36.87	-0.03
24	SLE FR 3	-596	-9	2573	5.73	-36.87	-0.03
24	SLE FR 4	-616	-9	2626	5.57	-38.06	-0.03
24	SLE FR 5	-616	-9	2641	5.91	-38.07	-0.03
24	SLE FR 6	-628	-9	2679	6.01	-38.74	-0.03
24	SLE QP 1	-594	-9	2565	5.71	-36.74	-0.03
24	SLE QP 2	-614	-9	2634	5.89	-37.94	-0.03
24	SLD 1	-321	2	2257	-2.1	-22.89	0.01
24	SLD 2	-321	2	2257	-2.1	-22.89	0.01
24	SLD 3	-171	11	1880	-8.36	-15.8	0.04
24	SLD 4	-171	11	1880	-8.36	-15.8	0.04
24	SLD 5	-755	-19	3092	13	-44.18	-0.07
24	SLD 6	-755	-19	3092	13	-44.18	-0.07
24	SLD 7	-252	10	1836	-7.89	-20.54	0.04
24	SLD 8	-252	10	1836	-7.89	-20.54	0.04
24	SLD 9	-976	-28	3431	19.67	-55.34	-0.11
24	SLD 10	-976	-28	3431	19.67	-55.34	-0.11
24	SLD 11	-473	1	2176	-1.22	-31.7	0.01
24	SLD 12	-473	1	2176	-1.22	-31.7	0.01
24	SLD 13	-1058	-29	3387	20.15	-60.08	-0.11
24	SLD 14	-1058	-29	3387	20.15	-60.08	-0.11
24	SLD 15	-907	-20	3011	13.88	-52.99	-0.07
24	SLD 16	-907	-20	3011	13.88	-52.99	-0.07
24	SLV 1	58	16	1771	-12.57	-3.32	0.06
24	SLV 2	58	16	1771	-12.57	-3.32	0.06
24	SLV 3	413	37	863	-27.66	13.46	0.14

Nodo	Cont.	Reazione a traslazione			Reazione a rotazione		
Ind.	N.br.	x	y	z	x	y	z
24	SLV 4	413	37	863	-27.66	13.46	0.14
24	SLV 5	-952	-33	3751	23.23	-53.01	-0.13
24	SLV 6	-952	-33	3751	23.23	-53.01	-0.13
24	SLV 7	233	36	726	-27.06	2.94	0.15
24	SLV 8	233	36	726	-27.06	2.94	0.15
24	SLV 9	-1461	-55	4541	38.84	-78.82	-0.21
24	SLV 10	-1461	-55	4541	38.84	-78.82	-0.21
24	SLV 11	-277	15	1516	-11.45	-22.87	0.07
24	SLV 12	-277	15	1516	-11.45	-22.87	0.07
24	SLV 13	-1642	-55	4404	39.44	-89.35	-0.21
24	SLV 14	-1642	-55	4404	39.44	-89.35	-0.21
24	SLV 15	-1286	-34	3496	24.36	-72.56	-0.12
24	SLV 16	-1286	-34	3496	24.36	-72.56	-0.12
25	SLU 1	-331	-3	2439	3.18	-1.35	-0.01
25	SLU 2	-341	-1	2370	1.37	-1.46	0
25	SLU 3	-335	-3	2469	3.25	-1.28	-0.01
25	SLU 4	-341	-2	2428	2.16	-1.34	0
25	SLU 5	-343	-1	2396	1.42	-1.3	0
25	SLU 6	-336	-3	2496	3.29	-1.11	-0.01
25	SLU 7	-343	-2	2454	2.21	-1.18	0
25	SLU 8	-334	-3	2492	3.27	-1.02	-0.01
25	SLU 9	-340	-2	2450	2.19	-1.09	0
25	SLU 10	-384	-1	2598	1.73	-1.93	0
25	SLU 11	-378	-4	2697	3.6	-1.74	-0.01
25	SLU 12	-384	-2	2655	2.52	-1.81	-0.01
25	SLU 13	-385	-1	2624	1.77	-1.77	0
25	SLU 14	-379	-4	2723	3.65	-1.58	-0.01
25	SLU 15	-385	-2	2682	2.57	-1.64	-0.01
25	SLU 16	-377	-4	2719	3.63	-1.49	-0.01
25	SLU 17	-383	-2	2678	2.54	-1.56	-0.01
25	SLU 18	-392	-4	2764	3.69	-2.02	-0.01
25	SLU 19	-398	-2	2723	2.6	-2.09	-0.01
25	SLU 20	-394	-4	2790	3.74	-1.85	-0.01
25	SLU 21	-400	-3	2749	2.65	-1.92	-0.01
25	SLU 22	-360	-4	2620	3.45	-1.47	-0.01
25	SLU 23	-370	-1	2551	1.64	-1.58	0
25	SLU 24	-364	-4	2650	3.52	-1.39	-0.01
25	SLU 25	-370	-2	2609	2.44	-1.46	-0.01
25	SLU 26	-372	-1	2578	1.69	-1.42	0
25	SLU 27	-366	-4	2677	3.57	-1.23	-0.01
25	SLU 28	-372	-2	2635	2.48	-1.3	-0.01
25	SLU 29	-364	-4	2673	3.55	-1.14	-0.01
25	SLU 30	-370	-2	2631	2.46	-1.21	-0.01
25	SLU 31	-413	-2	2779	2	-2.05	0
25	SLU 32	-407	-4	2878	3.88	-1.86	-0.01
25	SLU 33	-413	-3	2837	2.79	-1.93	-0.01
25	SLU 34	-415	-2	2805	2.05	-1.88	0
25	SLU 35	-409	-4	2904	3.93	-1.69	-0.01
25	SLU 36	-415	-3	2863	2.84	-1.76	-0.01
25	SLU 37	-406	-4	2900	3.9	-1.61	-0.01
25	SLU 38	-412	-3	2859	2.82	-1.67	-0.01
25	SLU 39	-421	-4	2945	3.96	-2.14	-0.01
25	SLU 40	-427	-3	2904	2.88	-2.2	-0.01
25	SLU 41	-423	-4	2971	4.01	-1.97	-0.01
25	SLU 42	-429	-3	2930	2.92	-2.04	-0.01
25	SLU 43	-420	-4	3108	4.04	-1.72	-0.01
25	SLU 44	-430	-2	3040	2.23	-1.83	0
25	SLU 45	-424	-4	3139	4.11	-1.64	-0.01
25	SLU 46	-430	-3	3097	3.02	-1.71	-0.01
25	SLU 47	-432	-2	3066	2.27	-1.67	0
25	SLU 48	-426	-4	3165	4.15	-1.48	-0.01
25	SLU 49	-432	-3	3124	3.07	-1.54	-0.01
25	SLU 50	-423	-4	3161	4.13	-1.39	-0.01
25	SLU 51	-430	-3	3120	3.05	-1.46	-0.01
25	SLU 52	-473	-2	3267	2.59	-2.3	0
25	SLU 53	-467	-5	3366	4.46	-2.11	-0.01
25	SLU 54	-473	-3	3325	3.38	-2.18	-0.01
25	SLU 55	-475	-2	3294	2.63	-2.13	0
25	SLU 56	-468	-5	3393	4.51	-1.94	-0.01
25	SLU 57	-475	-3	3351	3.42	-2.01	-0.01
25	SLU 58	-466	-5	3389	4.49	-1.86	-0.01
25	SLU 59	-472	-3	3348	3.4	-1.92	-0.01
25	SLU 60	-481	-5	3433	4.55	-2.39	-0.01
25	SLU 61	-487	-3	3392	3.46	-2.45	-0.01
25	SLU 62	-483	-5	3460	4.59	-2.22	-0.01
25	SLU 63	-489	-3	3419	3.51	-2.29	-0.01
25	SLU 64	-449	-5	3289	4.31	-1.84	-0.01
25	SLU 65	-459	-2	3221	2.5	-1.95	0
25	SLU 66	-453	-5	3320	4.38	-1.76	-0.01
25	SLU 67	-459	-3	3278	3.29	-1.83	-0.01
25	SLU 68	-461	-2	3247	2.55	-1.78	0
25	SLU 69	-455	-5	3346	4.43	-1.6	-0.01
25	SLU 70	-461	-3	3305	3.34	-1.66	-0.01
25	SLU 71	-453	-5	3342	4.41	-1.51	-0.01
25	SLU 72	-459	-3	3301	3.32	-1.57	-0.01
25	SLU 73	-502	-3	3448	2.86	-2.41	-0.01
25	SLU 74	-496	-5	3547	4.74	-2.23	-0.01
25	SLU 75	-502	-4	3506	3.65	-2.29	-0.01
25	SLU 76	-504	-3	3475	2.91	-2.25	-0.01
25	SLU 77	-498	-5	3574	4.78	-2.06	-0.01
25	SLU 78	-504	-4	3533	3.7	-2.13	-0.01

Nodo	Cont.	Reazione a traslazione			Reazione a rotazione		
Ind.	N.br.	x	y	z	x	y	z
25	SLU 79	-496	-5	3570	4.76	-1.97	-0.01
25	SLU 80	-502	-4	3529	3.68	-2.04	-0.01
25	SLU 81	-511	-5	3614	4.82	-2.5	-0.01
25	SLU 82	-517	-4	3573	3.74	-2.57	-0.01
25	SLU 83	-512	-5	3641	4.87	-2.34	-0.01
25	SLU 84	-518	-4	3600	3.78	-2.4	-0.01
25	SLE RA 1	-339	-3	2490	3.26	-1.39	-0.01
25	SLE RA 2	-346	-2	2445	2.05	-1.46	0
25	SLE RA 3	-342	-3	2511	3.3	-1.34	-0.01
25	SLE RA 4	-346	-3	2483	2.58	-1.38	-0.01
25	SLE RA 5	-347	-2	2462	2.08	-1.35	0
25	SLE RA 6	-343	-4	2528	3.33	-1.23	-0.01
25	SLE RA 7	-347	-3	2501	2.61	-1.27	-0.01
25	SLE RA 8	-342	-4	2526	3.32	-1.17	-0.01
25	SLE RA 9	-346	-3	2498	2.6	-1.21	-0.01
25	SLE RA 10	-375	-2	2596	2.29	-1.77	0
25	SLE RA 11	-370	-4	2662	3.54	-1.65	-0.01
25	SLE RA 12	-374	-3	2635	2.82	-1.69	-0.01
25	SLE RA 13	-376	-2	2614	2.32	-1.66	0
25	SLE RA 14	-372	-4	2680	3.57	-1.54	-0.01
25	SLE RA 15	-376	-3	2653	2.85	-1.58	-0.01
25	SLE RA 16	-370	-4	2677	3.56	-1.48	-0.01
25	SLE RA 17	-374	-3	2650	2.83	-1.52	-0.01
25	SLE RA 18	-380	-4	2707	3.6	-1.83	-0.01
25	SLE RA 19	-384	-3	2680	2.87	-1.88	-0.01
25	SLE RA 20	-381	-4	2725	3.63	-1.72	-0.01
25	SLE RA 21	-385	-3	2697	2.9	-1.77	-0.01
25	SLE FR 1	-339	-3	2490	3.26	-1.39	-0.01
25	SLE FR 2	-341	-3	2481	3.01	-1.4	-0.01
25	SLE FR 3	-340	-3	2498	3.27	-1.34	-0.01
25	SLE FR 4	-353	-3	2546	3.12	-1.54	-0.01
25	SLE FR 5	-352	-4	2563	3.37	-1.48	-0.01
25	SLE FR 6	-360	-4	2599	3.43	-1.61	-0.01
25	SLE QP 1	-339	-3	2490	3.26	-1.39	-0.01
25	SLE QP 2	-351	-4	2556	3.36	-1.52	-0.01
25	SLD 1	-70	3	2127	-2.23	10.46	0.01
25	SLD 2	-70	3	2127	-2.23	10.46	0.01
25	SLD 3	50	11	1753	-7.16	14.67	0.04
25	SLD 4	50	11	1753	-7.16	14.67	0.04
25	SLD 5	-449	-13	2994	9.16	-4.33	-0.04
25	SLD 6	-449	-13	2994	9.16	-4.33	-0.04
25	SLD 7	-49	12	1747	-7.28	9.74	0.04
25	SLD 8	-49	12	1747	-7.28	9.74	0.04
25	SLD 9	-654	-19	3364	13.99	-12.78	-0.06
25	SLD 10	-654	-19	3364	13.99	-12.78	-0.06
25	SLD 11	-254	6	2117	-2.44	1.29	0.02
25	SLD 12	-254	6	2117	-2.44	1.29	0.02
25	SLD 13	-753	-18	3358	13.88	-17.72	-0.05
25	SLD 14	-753	-18	3358	13.88	-17.72	-0.05
25	SLD 15	-633	-10	2984	8.95	-13.5	-0.03
25	SLD 16	-633	-10	2984	8.95	-13.5	-0.03
25	SLV 1	292	12	1586	-9.55	25.72	0.03
25	SLV 2	292	12	1586	-9.55	25.72	0.03
25	SLV 3	576	30	673	-21.42	35.62	0.1
25	SLV 4	576	30	673	-21.42	35.62	0.1
25	SLV 5	-588	-26	3650	17.48	-8.35	-0.09
25	SLV 6	-588	-26	3650	17.48	-8.35	-0.09
25	SLV 7	356	34	605	-22.07	24.63	0.12
25	SLV 8	356	34	605	-22.07	24.63	0.12
25	SLV 9	-1059	-41	4506	28.79	-27.67	-0.14
25	SLV 10	-1059	-41	4506	28.79	-27.67	-0.14
25	SLV 11	-115	19	1461	-10.76	5.31	0.08
25	SLV 12	-115	19	1461	-10.76	5.31	0.08
25	SLV 13	-1279	-37	4439	28.14	-38.66	-0.12
25	SLV 14	-1279	-37	4439	28.14	-38.66	-0.12
25	SLV 15	-995	-19	3525	16.27	-28.77	-0.05
25	SLV 16	-995	-19	3525	16.27	-28.77	-0.05
26	SLU 1	-625	3	2511	0.75	-43.56	0.02
26	SLU 2	-639	4	2427	-0.16	-44.33	0.02
26	SLU 3	-634	3	2542	0.78	-44.24	0.02
26	SLU 4	-643	3	2491	0.23	-44.7	0.02
26	SLU 5	-646	4	2454	-0.14	-44.9	0.02
26	SLU 6	-641	3	2569	0.79	-44.81	0.02
26	SLU 7	-649	3	2519	0.24	-45.28	0.02
26	SLU 8	-639	3	2566	0.78	-44.71	0.02
26	SLU 9	-647	3	2515	0.23	-45.17	0.02
26	SLU 10	-711	4	2660	-0.06	-49.16	0.03
26	SLU 11	-706	3	2775	0.87	-49.07	0.02
26	SLU 12	-714	4	2724	0.32	-49.53	0.02
26	SLU 13	-717	4	2687	-0.05	-49.74	0.03
26	SLU 14	-712	3	2802	0.89	-49.65	0.02
26	SLU 15	-721	4	2752	0.34	-50.11	0.03
26	SLU 16	-710	3	2799	0.88	-49.54	0.02
26	SLU 17	-719	4	2748	0.33	-50.01	0.03
26	SLU 18	-727	3	2844	0.89	-50.46	0.02
26	SLU 19	-736	4	2793	0.34	-50.92	0.03
26	SLU 20	-734	3	2871	0.9	-51.04	0.02
26	SLU 21	-742	4	2820	0.36	-51.5	0.03
26	SLU 22	-679	3	2698	0.83	-47.35	0.02
26	SLU 23	-693	4	2614	-0.09	-48.12	0.02
26	SLU 24	-688	3	2729	0.85	-48.03	0.02

Nodo	Cont.	Reazione a traslazione			Reazione a rotazione		
Ind.	N.br.	x	y	z	x	y	z
26	SLU 25	-697	3	2679	0.3	-48.49	0.02
26	SLU 26	-700	4	2641	-0.07	-48.7	0.03
26	SLU 27	-695	3	2757	0.86	-48.61	0.02
26	SLU 28	-703	4	2706	0.31	-49.07	0.02
26	SLU 29	-693	3	2753	0.85	-48.5	0.02
26	SLU 30	-701	4	2702	0.31	-48.97	0.02
26	SLU 31	-765	4	2847	0.01	-52.95	0.03
26	SLU 32	-760	3	2962	0.94	-52.86	0.03
26	SLU 33	-768	4	2911	0.4	-53.32	0.03
26	SLU 34	-771	4	2874	0.02	-53.53	0.03
26	SLU 35	-766	3	2989	0.96	-53.44	0.03
26	SLU 36	-775	4	2939	0.41	-53.9	0.03
26	SLU 37	-764	3	2986	0.95	-53.34	0.03
26	SLU 38	-773	4	2935	0.4	-53.8	0.03
26	SLU 39	-782	3	3031	0.96	-54.25	0.03
26	SLU 40	-790	4	2980	0.41	-54.71	0.03
26	SLU 41	-788	3	3058	0.97	-54.83	0.03
26	SLU 42	-797	4	3008	0.43	-55.29	0.03
26	SLU 43	-794	3	3200	0.96	-55.33	0.03
26	SLU 44	-808	4	3116	0.04	-56.09	0.03
26	SLU 45	-803	3	3231	0.98	-56	0.03
26	SLU 46	-812	4	3181	0.43	-56.47	0.03
26	SLU 47	-815	4	3143	0.06	-56.67	0.03
26	SLU 48	-810	3	3258	0.99	-56.58	0.03
26	SLU 49	-818	4	3208	0.45	-57.04	0.03
26	SLU 50	-808	3	3255	0.98	-56.48	0.03
26	SLU 51	-816	4	3204	0.44	-56.94	0.03
26	SLU 52	-880	5	3349	0.14	-60.93	0.03
26	SLU 53	-875	4	3464	1.07	-60.84	0.03
26	SLU 54	-883	4	3413	0.53	-61.3	0.03
26	SLU 55	-886	5	3376	0.15	-61.5	0.03
26	SLU 56	-881	4	3491	1.09	-61.41	0.03
26	SLU 57	-890	4	3441	0.54	-61.88	0.03
26	SLU 58	-879	4	3488	1.08	-61.31	0.03
26	SLU 59	-888	4	3437	0.53	-61.77	0.03
26	SLU 60	-897	4	3533	1.09	-62.23	0.03
26	SLU 61	-905	4	3482	0.54	-62.69	0.03
26	SLU 62	-903	4	3560	1.11	-62.81	0.03
26	SLU 63	-912	4	3510	0.56	-63.27	0.03
26	SLU 64	-849	4	3387	1.03	-59.12	0.03
26	SLU 65	-862	5	3303	0.11	-59.89	0.03
26	SLU 66	-857	4	3418	1.05	-59.8	0.03
26	SLU 67	-866	4	3368	0.5	-60.26	0.03
26	SLU 68	-869	5	3331	0.13	-60.46	0.03
26	SLU 69	-864	4	3446	1.06	-60.37	0.03
26	SLU 70	-872	4	3395	0.52	-60.83	0.03
26	SLU 71	-862	4	3442	1.06	-60.27	0.03
26	SLU 72	-870	4	3392	0.51	-60.73	0.03
26	SLU 73	-934	5	3536	0.21	-64.72	0.03
26	SLU 74	-929	4	3651	1.15	-64.63	0.03
26	SLU 75	-937	4	3601	0.6	-65.09	0.03
26	SLU 76	-941	5	3563	0.22	-65.3	0.03
26	SLU 77	-936	4	3678	1.16	-65.21	0.03
26	SLU 78	-944	4	3628	0.61	-65.67	0.03
26	SLU 79	-933	4	3675	1.15	-65.1	0.03
26	SLU 80	-942	4	3624	0.6	-65.56	0.03
26	SLU 81	-951	4	3720	1.16	-66.02	0.03
26	SLU 82	-959	5	3669	0.62	-66.48	0.03
26	SLU 83	-957	4	3747	1.18	-66.6	0.03
26	SLU 84	-966	5	3697	0.63	-67.06	0.03
26	SLE RA 1	-641	3	2565	0.78	-44.64	0.02
26	SLE RA 2	-650	3	2508	0.17	-45.15	0.02
26	SLE RA 3	-647	3	2585	0.79	-45.09	0.02
26	SLE RA 4	-652	3	2551	0.43	-45.4	0.02
26	SLE RA 5	-655	3	2527	0.18	-45.54	0.02
26	SLE RA 6	-651	3	2603	0.8	-45.48	0.02
26	SLE RA 7	-657	3	2570	0.43	-45.79	0.02
26	SLE RA 8	-650	3	2601	0.79	-45.41	0.02
26	SLE RA 9	-655	3	2567	0.43	-45.72	0.02
26	SLE RA 10	-698	4	2664	0.23	-48.38	0.02
26	SLE RA 11	-694	3	2740	0.85	-48.32	0.02
26	SLE RA 12	-700	3	2707	0.49	-48.62	0.02
26	SLE RA 13	-702	4	2682	0.24	-48.76	0.02
26	SLE RA 14	-699	3	2759	0.86	-48.7	0.02
26	SLE RA 15	-704	3	2725	0.5	-49.01	0.02
26	SLE RA 16	-697	3	2756	0.86	-48.63	0.02
26	SLE RA 17	-703	3	2723	0.49	-48.94	0.02
26	SLE RA 18	-709	3	2786	0.87	-49.24	0.02
26	SLE RA 19	-714	3	2753	0.5	-49.55	0.02
26	SLE RA 20	-713	3	2804	0.87	-49.63	0.02
26	SLE RA 21	-719	3	2771	0.51	-49.94	0.02
26	SLE FR 1	-641	3	2565	0.78	-44.64	0.02
26	SLE FR 2	-643	3	2553	0.65	-44.74	0.02
26	SLE FR 3	-643	3	2572	0.78	-44.8	0.02
26	SLE FR 4	-663	3	2620	0.68	-46.12	0.02
26	SLE FR 5	-663	3	2638	0.81	-46.18	0.02
26	SLE FR 6	-675	3	2675	0.82	-46.94	0.02
26	SLE QP 1	-641	3	2565	0.78	-44.64	0.02
26	SLE QP 2	-661	3	2631	0.8	-46.02	0.02
26	SLD 1	-351	-4	2064	-2.01	-28.79	0.02
26	SLD 2	-351	-4	2064	-2.01	-28.79	0.02

Nodo	Cont.	Reazione a traslazione			Reazione a rotazione		
Ind.	N.br.	x	y	z	x	y	z
26	SLD 3	-224	0	1627	-4.65	-22.11	0.01
26	SLD 4	-224	0	1627	-4.65	-22.11	0.01
26	SLD 5	-762	-6	3124	3.96	-50.98	0.03
26	SLD 6	-762	-6	3124	3.96	-50.98	0.03
26	SLD 7	-337	9	1666	-4.83	-28.72	0.01
26	SLD 8	-337	9	1666	-4.83	-28.72	0.01
26	SLD 9	-986	-3	3596	6.44	-63.32	0.04
26	SLD 10	-986	-3	3596	6.44	-63.32	0.04
26	SLD 11	-561	11	2138	-2.35	-41.06	0.01
26	SLD 12	-561	11	2138	-2.35	-41.06	0.01
26	SLD 13	-1099	5	3635	6.26	-69.93	0.03
26	SLD 14	-1099	5	3635	6.26	-69.93	0.03
26	SLD 15	-971	9	3198	3.62	-63.25	0.03
26	SLD 16	-971	9	3198	3.62	-63.25	0.03
26	SLV 1	50	-13	1361	-5.71	-6.33	0.01
26	SLV 2	50	-13	1361	-5.71	-6.33	0.01
26	SLV 3	352	-3	285	-12.03	9.48	-0.01
26	SLV 4	352	-3	285	-12.03	9.48	-0.01
26	SLV 5	-907	-18	3882	8.43	-58.08	0.04
26	SLV 6	-907	-18	3882	8.43	-58.08	0.04
26	SLV 7	102	17	295	-12.63	-5.4	-0.01
26	SLV 8	102	17	295	-12.63	-5.4	-0.01
26	SLV 9	-1424	-11	4967	14.23	-86.64	0.06
26	SLV 10	-1424	-11	4967	14.23	-86.64	0.06
26	SLV 11	-416	23	1380	-6.82	-33.96	0
26	SLV 12	-416	23	1380	-6.82	-33.96	0
26	SLV 13	-1675	8	4977	13.63	-101.52	0.05
26	SLV 14	-1675	8	4977	13.63	-101.52	0.05
26	SLV 15	-1372	18	3901	7.32	-85.72	0.03
26	SLV 16	-1372	18	3901	7.32	-85.72	0.03
27	SLU 1	-425	227	2648	2.39	-4.07	0.08
27	SLU 2	-421	208	2557	3.1	-3.89	0.09
27	SLU 3	-430	229	2680	2.46	-4.06	0.08
27	SLU 4	-427	218	2625	2.89	-3.95	0.08
27	SLU 5	-424	210	2585	3.17	-3.84	0.09
27	SLU 6	-433	231	2708	2.53	-4.01	0.08
27	SLU 7	-431	220	2653	2.96	-3.9	0.09
27	SLU 8	-432	231	2704	2.53	-3.97	0.08
27	SLU 9	-429	220	2649	2.96	-3.86	0.08
27	SLU 10	-465	225	2802	3.5	-4.38	0.1
27	SLU 11	-474	247	2925	2.86	-4.56	0.09
27	SLU 12	-471	235	2871	3.29	-4.45	0.09
27	SLU 13	-468	227	2830	3.57	-4.33	0.1
27	SLU 14	-477	249	2954	2.93	-4.5	0.09
27	SLU 15	-475	237	2899	3.36	-4.39	0.1
27	SLU 16	-476	249	2949	2.93	-4.46	0.09
27	SLU 17	-474	237	2895	3.36	-4.35	0.09
27	SLU 18	-488	252	2999	2.96	-4.78	0.09
27	SLU 19	-485	240	2944	3.39	-4.67	0.1
27	SLU 20	-492	254	3027	3.03	-4.73	0.09
27	SLU 21	-489	243	2972	3.46	-4.62	0.1
27	SLU 22	-458	241	2845	2.71	-4.36	0.08
27	SLU 23	-454	222	2754	3.42	-4.18	0.1
27	SLU 24	-463	244	2877	2.78	-4.35	0.09
27	SLU 25	-461	232	2823	3.21	-4.24	0.09
27	SLU 26	-458	224	2782	3.49	-4.12	0.1
27	SLU 27	-467	246	2905	2.85	-4.3	0.09
27	SLU 28	-464	234	2851	3.28	-4.19	0.09
27	SLU 29	-466	246	2901	2.85	-4.26	0.09
27	SLU 30	-463	234	2847	3.28	-4.15	0.09
27	SLU 31	-498	240	3000	3.82	-4.67	0.11
27	SLU 32	-507	261	3123	3.18	-4.84	0.1
27	SLU 33	-505	250	3068	3.61	-4.73	0.1
27	SLU 34	-502	242	3028	3.89	-4.62	0.11
27	SLU 35	-511	264	3151	3.25	-4.79	0.1
27	SLU 36	-508	252	3096	3.68	-4.68	0.1
27	SLU 37	-510	263	3147	3.25	-4.75	0.1
27	SLU 38	-507	252	3092	3.68	-4.64	0.1
27	SLU 39	-522	267	3196	3.28	-5.07	0.1
27	SLU 40	-519	255	3141	3.71	-4.96	0.11
27	SLU 41	-525	269	3224	3.35	-5.01	0.1
27	SLU 42	-522	257	3169	3.78	-4.9	0.11
27	SLU 43	-541	290	3374	3	-5.2	0.1
27	SLU 44	-536	271	3283	3.71	-5.01	0.11
27	SLU 45	-546	292	3407	3.07	-5.19	0.1
27	SLU 46	-543	281	3352	3.5	-5.08	0.11
27	SLU 47	-540	273	3312	3.78	-4.96	0.11
27	SLU 48	-549	294	3435	3.14	-5.13	0.1
27	SLU 49	-547	283	3380	3.57	-5.02	0.11
27	SLU 50	-548	294	3431	3.14	-5.09	0.1
27	SLU 51	-545	283	3376	3.57	-4.98	0.11
27	SLU 52	-581	288	3529	4.11	-5.51	0.12
27	SLU 53	-590	310	3652	3.47	-5.68	0.11
27	SLU 54	-587	298	3598	3.9	-5.57	0.12
27	SLU 55	-584	290	3557	4.18	-5.45	0.12
27	SLU 56	-593	312	3680	3.54	-5.63	0.11
27	SLU 57	-591	301	3626	3.97	-5.52	0.12
27	SLU 58	-592	312	3676	3.54	-5.59	0.11
27	SLU 59	-589	300	3622	3.97	-5.48	0.12
27	SLU 60	-604	315	3725	3.57	-5.9	0.11
27	SLU 61	-601	303	3671	4	-5.79	0.12

Nodo	Cont.	Reazione a traslazione			Reazione a rotazione		
Ind.	N.br.	x	y	z	x	y	z
27	SLU 62	-607	317	3753	3.64	-5.85	0.11
27	SLU 63	-605	306	3699	4.07	-5.74	0.12
27	SLU 64	-574	304	3572	3.32	-5.48	0.1
27	SLU 65	-570	285	3481	4.03	-5.3	0.12
27	SLU 66	-579	307	3604	3.39	-5.47	0.11
27	SLU 67	-577	295	3549	3.82	-5.36	0.11
27	SLU 68	-574	287	3509	4.1	-5.25	0.12
27	SLU 69	-583	309	3632	3.46	-5.42	0.11
27	SLU 70	-580	297	3577	3.89	-5.31	0.11
27	SLU 71	-582	309	3628	3.46	-5.38	0.11
27	SLU 72	-579	297	3573	3.89	-5.27	0.11
27	SLU 73	-614	303	3726	4.43	-5.79	0.13
27	SLU 74	-623	324	3850	3.79	-5.97	0.12
27	SLU 75	-621	313	3795	4.22	-5.86	0.12
27	SLU 76	-618	305	3754	4.5	-5.74	0.13
27	SLU 77	-627	327	3878	3.86	-5.91	0.12
27	SLU 78	-624	315	3823	4.28	-5.8	0.12
27	SLU 79	-626	326	3874	3.86	-5.87	0.12
27	SLU 80	-623	315	3819	4.28	-5.76	0.12
27	SLU 81	-637	330	3923	3.89	-6.19	0.12
27	SLU 82	-635	318	3868	4.32	-6.08	0.13
27	SLU 83	-641	332	3951	3.96	-6.14	0.12
27	SLU 84	-638	320	3896	4.39	-6.03	0.13
27	SLE RA 1	-434	231	2704	2.48	-4.16	0.08
27	SLE RA 2	-432	218	2644	2.96	-4.03	0.09
27	SLE RA 3	-438	233	2726	2.53	-4.15	0.08
27	SLE RA 4	-436	225	2689	2.81	-4.07	0.08
27	SLE RA 5	-434	220	2662	3	-4	0.09
27	SLE RA 6	-440	234	2744	2.58	-4.11	0.08
27	SLE RA 7	-438	226	2708	2.86	-4.04	0.08
27	SLE RA 8	-439	234	2742	2.58	-4.09	0.08
27	SLE RA 9	-437	226	2705	2.86	-4.01	0.08
27	SLE RA 10	-461	230	2807	3.22	-4.36	0.09
27	SLE RA 11	-467	244	2889	2.8	-4.48	0.09
27	SLE RA 12	-465	237	2853	3.08	-4.4	0.09
27	SLE RA 13	-463	231	2826	3.27	-4.33	0.09
27	SLE RA 14	-469	246	2908	2.84	-4.44	0.09
27	SLE RA 15	-468	238	2872	3.13	-4.37	0.09
27	SLE RA 16	-469	246	2905	2.84	-4.41	0.09
27	SLE RA 17	-467	238	2869	3.13	-4.34	0.09
27	SLE RA 18	-477	248	2938	2.86	-4.63	0.09
27	SLE RA 19	-475	240	2902	3.15	-4.55	0.09
27	SLE RA 20	-479	249	2957	2.91	-4.59	0.09
27	SLE RA 21	-477	242	2920	3.19	-4.52	0.09
27	SLE FR 1	-434	231	2704	2.48	-4.16	0.08
27	SLE FR 2	-434	228	2692	2.58	-4.13	0.08
27	SLE FR 3	-435	231	2712	2.5	-4.14	0.08
27	SLE FR 4	-447	233	2762	2.69	-4.27	0.08
27	SLE FR 5	-448	237	2782	2.62	-4.28	0.08
27	SLE FR 6	-456	239	2821	2.67	-4.39	0.08
27	SLE QP 1	-434	231	2704	2.48	-4.16	0.08
27	SLE QP 2	-447	236	2774	2.6	-4.3	0.08
27	SLD 1	-227	209	1998	-1.41	2.98	0.03
27	SLD 2	-227	209	1998	-1.41	2.98	0.03
27	SLD 3	-150	115	1492	2.03	4.91	-0.03
27	SLD 4	-150	115	1492	2.03	4.91	-0.03
27	SLD 5	-498	370	3310	-3.83	-5.05	0.15
27	SLD 6	-498	370	3310	-3.83	-5.05	0.15
27	SLD 7	-241	57	1621	7.65	1.4	-0.03
27	SLD 8	-241	57	1621	7.65	1.4	-0.03
27	SLD 9	-653	415	3927	-2.45	-9.99	0.2
27	SLD 10	-653	415	3927	-2.45	-9.99	0.2
27	SLD 11	-396	102	2239	9.02	-3.55	0.01
27	SLD 12	-396	102	2239	9.02	-3.55	0.01
27	SLD 13	-744	357	4057	3.17	-13.5	0.19
27	SLD 14	-744	357	4057	3.17	-13.5	0.19
27	SLD 15	-667	263	3551	6.61	-11.57	0.14
27	SLD 16	-667	263	3551	6.61	-11.57	0.14
27	SLV 1	55	183	1033	-7.07	12.27	-0.04
27	SLV 2	55	183	1033	-7.07	12.27	-0.04
27	SLV 3	236	-49	-209	1.5	16.81	-0.18
27	SLV 4	236	-49	-209	1.5	16.81	-0.18
27	SLV 5	-571	572	4136	-13.3	-6.2	0.25
27	SLV 6	-571	572	4136	-13.3	-6.2	0.25
27	SLV 7	32	-202	-4	15.26	8.91	-0.2
27	SLV 8	32	-202	-4	15.26	8.91	-0.2
27	SLV 9	-926	674	5553	-10.06	-17.51	0.37
27	SLV 10	-926	674	5553	-10.06	-17.51	0.37
27	SLV 11	-323	-100	1413	18.49	-2.39	-0.09
27	SLV 12	-323	-100	1413	18.49	-2.39	-0.09
27	SLV 13	-1130	521	5758	3.7	-25.4	0.34
27	SLV 14	-1130	521	5758	3.7	-25.4	0.34
27	SLV 15	-949	289	4515	12.27	-20.87	0.21
27	SLV 16	-949	289	4515	12.27	-20.87	0.21
28	SLU 1	-1	1142	2559	-62.55	-0.33	0.05
28	SLU 2	-1	1141	2564	-62.5	-0.22	0.05
28	SLU 3	-1	1167	2605	-63.9	-0.35	0.05
28	SLU 4	-1	1166	2607	-63.87	-0.28	0.05
28	SLU 5	-1	1159	2598	-63.49	-0.23	0.05
28	SLU 6	-1	1186	2639	-64.9	-0.35	0.05
28	SLU 7	-1	1185	2641	-64.86	-0.28	0.05

Nodo	Cont.	Reazione a traslazione			Reazione a rotazione		
Ind.	N.br.	x	y	z	x	y	z
28	SLU 8	-1	1179	2627	-64.54	-0.35	0.05
28	SLU 9	-1	1178	2630	-64.51	-0.28	0.05
28	SLU 10	-1	1306	2883	-71.15	-0.27	0.06
28	SLU 11	-1	1333	2924	-72.56	-0.4	0.06
28	SLU 12	-1	1332	2926	-72.52	-0.33	0.06
28	SLU 13	-1	1325	2917	-72.14	-0.28	0.06
28	SLU 14	-1	1351	2958	-73.55	-0.41	0.06
28	SLU 15	-1	1351	2960	-73.51	-0.34	0.06
28	SLU 16	-1	1344	2946	-73.19	-0.4	0.06
28	SLU 17	-1	1344	2949	-73.16	-0.33	0.06
28	SLU 18	-1	1379	3015	-74.92	-0.41	0.06
28	SLU 19	-1	1378	3018	-74.88	-0.34	0.06
28	SLU 20	-1	1397	3049	-75.91	-0.42	0.06
28	SLU 21	-1	1396	3052	-75.87	-0.35	0.06
28	SLU 22	-1	1266	2795	-69.08	-0.38	0.06
28	SLU 23	-1	1265	2799	-69.03	-0.26	0.06
28	SLU 24	-1	1292	2840	-70.43	-0.39	0.06
28	SLU 25	-1	1291	2843	-70.4	-0.32	0.06
28	SLU 26	-1	1284	2833	-70.02	-0.27	0.06
28	SLU 27	-1	1310	2874	-71.43	-0.4	0.06
28	SLU 28	-1	1310	2877	-71.39	-0.33	0.06
28	SLU 29	-1	1303	2863	-71.07	-0.39	0.06
28	SLU 30	-1	1303	2865	-71.04	-0.32	0.06
28	SLU 31	-1	1431	3118	-77.68	-0.31	0.06
28	SLU 32	-1	1458	3159	-79.09	-0.44	0.06
28	SLU 33	-1	1457	3162	-79.05	-0.37	0.06
28	SLU 34	-1	1450	3152	-78.67	-0.32	0.06
28	SLU 35	-1	1476	3193	-80.08	-0.45	0.06
28	SLU 36	-1	1475	3196	-80.04	-0.38	0.06
28	SLU 37	-1	1469	3182	-79.72	-0.44	0.06
28	SLU 38	-1	1469	3185	-79.69	-0.37	0.06
28	SLU 39	-1	1503	3251	-81.45	-0.45	0.06
28	SLU 40	-1	1503	3253	-81.41	-0.38	0.06
28	SLU 41	-1	1522	3285	-82.44	-0.46	0.06
28	SLU 42	-1	1521	3287	-82.4	-0.39	0.06
28	SLU 43	-1	1441	3246	-79.08	-0.42	0.07
28	SLU 44	-1	1440	3250	-79.02	-0.3	0.07
28	SLU 45	-1	1467	3292	-80.43	-0.43	0.07
28	SLU 46	-1	1466	3294	-80.39	-0.36	0.07
28	SLU 47	-1	1459	3284	-80.02	-0.31	0.07
28	SLU 48	-1	1485	3326	-81.42	-0.44	0.07
28	SLU 49	-1	1485	3328	-81.39	-0.37	0.07
28	SLU 50	-1	1478	3314	-81.07	-0.44	0.07
28	SLU 51	-1	1478	3317	-81.03	-0.37	0.07
28	SLU 52	-1	1606	3570	-87.68	-0.36	0.07
28	SLU 53	-2	1633	3611	-89.08	-0.48	0.07
28	SLU 54	-1	1632	3613	-89.05	-0.41	0.07
28	SLU 55	-1	1625	3604	-88.67	-0.36	0.07
28	SLU 56	-2	1651	3645	-90.08	-0.49	0.07
28	SLU 57	-1	1651	3647	-90.04	-0.42	0.07
28	SLU 58	-2	1644	3633	-89.72	-0.49	0.07
28	SLU 59	-1	1644	3636	-89.69	-0.42	0.07
28	SLU 60	-2	1678	3702	-91.44	-0.49	0.07
28	SLU 61	-1	1678	3705	-91.41	-0.42	0.07
28	SLU 62	-2	1697	3736	-92.44	-0.5	0.08
28	SLU 63	-1	1696	3739	-92.4	-0.43	0.07
28	SLU 64	-1	1566	3482	-85.61	-0.46	0.07
28	SLU 65	-1	1565	3486	-85.55	-0.34	0.07
28	SLU 66	-1	1591	3527	-86.96	-0.47	0.07
28	SLU 67	-1	1591	3530	-86.92	-0.4	0.07
28	SLU 68	-1	1584	3520	-86.55	-0.35	0.07
28	SLU 69	-1	1610	3561	-87.95	-0.48	0.07
28	SLU 70	-1	1609	3564	-87.92	-0.41	0.07
28	SLU 71	-1	1603	3550	-87.6	-0.48	0.07
28	SLU 72	-1	1602	3552	-87.56	-0.41	0.07
28	SLU 73	-1	1731	3805	-94.21	-0.4	0.08
28	SLU 74	-2	1757	3846	-95.61	-0.52	0.08
28	SLU 75	-1	1757	3849	-95.58	-0.46	0.08
28	SLU 76	-1	1749	3839	-95.2	-0.41	0.08
28	SLU 77	-2	1776	3880	-96.61	-0.53	0.08
28	SLU 78	-1	1775	3883	-96.57	-0.46	0.08
28	SLU 79	-2	1769	3869	-96.25	-0.53	0.08
28	SLU 80	-1	1768	3871	-96.22	-0.46	0.08
28	SLU 81	-2	1803	3938	-97.97	-0.54	0.08
28	SLU 82	-1	1802	3940	-97.94	-0.47	0.08
28	SLU 83	-2	1821	3972	-98.97	-0.54	0.08
28	SLU 84	-1	1821	3974	-98.93	-0.47	0.08
28	SLE RA 1	-1	1177	2626	-64.42	-0.35	0.05
28	SLE RA 2	-1	1177	2629	-64.38	-0.27	0.05
28	SLE RA 3	-1	1194	2657	-65.32	-0.35	0.05
28	SLE RA 4	-1	1194	2659	-65.3	-0.31	0.05
28	SLE RA 5	-1	1189	2652	-65.04	-0.27	0.05
28	SLE RA 6	-1	1207	2680	-65.98	-0.36	0.05
28	SLE RA 7	-1	1206	2681	-65.96	-0.31	0.05
28	SLE RA 8	-1	1202	2672	-65.74	-0.36	0.05
28	SLE RA 9	-1	1201	2674	-65.72	-0.31	0.05
28	SLE RA 10	-1	1287	2842	-70.15	-0.3	0.06
28	SLE RA 11	-1	1305	2870	-71.09	-0.39	0.06
28	SLE RA 12	-1	1304	2871	-71.06	-0.34	0.06
28	SLE RA 13	-1	1299	2865	-70.81	-0.31	0.06
28	SLE RA 14	-1	1317	2892	-71.75	-0.39	0.06

Nodo	Cont.	Reazione a traslazione			Reazione a rotazione		
Ind.	N.br.	x	y	z	x	y	z
28	SLE RA 15	-1	1317	2894	-71.73	-0.35	0.06
28	SLE RA 16	-1	1312	2885	-71.51	-0.39	0.06
28	SLE RA 17	-1	1312	2886	-71.49	-0.35	0.06
28	SLE RA 18	-1	1335	2930	-72.66	-0.4	0.06
28	SLE RA 19	-1	1335	2932	-72.64	-0.35	0.06
28	SLE RA 20	-1	1348	2953	-73.32	-0.4	0.06
28	SLE RA 21	-1	1347	2955	-73.3	-0.35	0.06
28	SLE FR 1	-1	1177	2626	-64.42	-0.35	0.05
28	SLE FR 2	-1	1177	2627	-64.41	-0.33	0.05
28	SLE FR 3	-1	1182	2636	-64.68	-0.35	0.05
28	SLE FR 4	-1	1224	2718	-66.88	-0.34	0.06
28	SLE FR 5	-1	1230	2727	-67.16	-0.36	0.06
28	SLE FR 6	-1	1256	2778	-68.54	-0.37	0.06
28	SLE QP 1	-1	1177	2626	-64.42	-0.35	0.05
28	SLE QP 2	-1	1225	2718	-66.89	-0.36	0.06
28	SLD 1	-3	1239	2673	-67.8	-0.87	0.06
28	SLD 2	-3	1239	2673	-67.8	-0.87	0.06
28	SLD 3	-2	773	2139	-43.61	-0.56	0.06
28	SLD 4	-2	773	2139	-43.61	-0.56	0.06
28	SLD 5	-5	1937	3515	-103.85	-0.99	0.07
28	SLD 6	-5	1937	3515	-103.85	-0.99	0.07
28	SLD 7	2	381	1733	-23.22	0.06	0.04
28	SLD 8	2	381	1733	-23.22	0.06	0.04
28	SLD 9	-4	2068	3702	-110.56	-0.78	0.07
28	SLD 10	-4	2068	3702	-110.56	-0.78	0.07
28	SLD 11	2	513	1920	-29.93	0.27	0.04
28	SLD 12	2	513	1920	-29.93	0.27	0.04
28	SLD 13	-1	1677	3297	-90.17	-0.16	0.05
28	SLD 14	-1	1677	3297	-90.17	-0.16	0.05
28	SLD 15	1	1210	2762	-65.98	0.15	0.05
28	SLD 16	1	1210	2762	-65.98	0.15	0.05
28	SLV 1	-6	1267	2626	-69.38	-1.56	0.08
28	SLV 2	-6	1267	2626	-69.38	-1.56	0.08
28	SLV 3	-2	178	1376	-12.94	-0.82	0.06
28	SLV 4	-2	178	1376	-12.94	-0.82	0.06
28	SLV 5	-9	2888	4586	-153.24	-1.85	0.09
28	SLV 6	-9	2888	4586	-153.24	-1.85	0.09
28	SLV 7	5	-740	420	34.9	0.63	0.03
28	SLV 8	5	-740	420	34.9	0.63	0.03
28	SLV 9	-7	3190	5016	-168.68	-1.35	0.08
28	SLV 10	-7	3190	5016	-168.68	-1.35	0.08
28	SLV 11	7	-439	850	19.46	1.12	0.02
28	SLV 12	7	-439	850	19.46	1.12	0.02
28	SLV 13	0	2271	4059	-120.85	0.1	0.05
28	SLV 14	0	2271	4059	-120.85	0.1	0.05
28	SLV 15	4	1182	2809	-64.4	0.84	0.03
28	SLV 16	4	1182	2809	-64.4	0.84	0.03
29	SLU 1	-6	87	1676	-18.17	-1.82	-0.02
29	SLU 2	-6	77	1648	-17.83	-1.13	-0.02
29	SLU 3	-6	88	1694	-18.48	-1.85	-0.02
29	SLU 4	-6	82	1677	-18.28	-1.43	-0.02
29	SLU 5	-6	78	1664	-18.13	-1.15	-0.02
29	SLU 6	-7	89	1711	-18.78	-1.87	-0.02
29	SLU 7	-6	83	1694	-18.57	-1.45	-0.02
29	SLU 8	-6	89	1709	-18.76	-1.86	-0.02
29	SLU 9	-6	83	1692	-18.56	-1.44	-0.02
29	SLU 10	-6	80	1786	-19.57	-1.33	-0.02
29	SLU 11	-7	91	1832	-20.22	-2.05	-0.02
29	SLU 12	-7	85	1815	-20.01	-1.63	-0.02
29	SLU 13	-6	81	1802	-19.86	-1.35	-0.02
29	SLU 14	-7	92	1848	-20.51	-2.07	-0.02
29	SLU 15	-7	86	1831	-20.31	-1.65	-0.02
29	SLU 16	-7	93	1847	-20.5	-2.06	-0.02
29	SLU 17	-7	86	1830	-20.29	-1.64	-0.02
29	SLU 18	-7	91	1873	-20.65	-2.1	-0.02
29	SLU 19	-7	85	1856	-20.45	-1.69	-0.02
29	SLU 20	-7	93	1889	-20.94	-2.12	-0.02
29	SLU 21	-7	87	1872	-20.74	-1.71	-0.02
29	SLU 22	-7	90	1788	-19.63	-1.97	-0.02
29	SLU 23	-6	80	1759	-19.29	-1.28	-0.02
29	SLU 24	-7	91	1806	-19.94	-2	-0.02
29	SLU 25	-7	85	1789	-19.74	-1.59	-0.02
29	SLU 26	-6	81	1776	-19.59	-1.3	-0.02
29	SLU 27	-7	93	1822	-20.24	-2.02	-0.02
29	SLU 28	-7	86	1805	-20.03	-1.61	-0.02
29	SLU 29	-7	93	1820	-20.22	-2.01	-0.02
29	SLU 30	-7	87	1803	-20.02	-1.6	-0.02
29	SLU 31	-7	83	1897	-21.03	-1.48	-0.02
29	SLU 32	-8	95	1944	-21.67	-2.2	-0.02
29	SLU 33	-7	89	1927	-21.47	-1.79	-0.02
29	SLU 34	-7	84	1913	-21.32	-1.5	-0.02
29	SLU 35	-8	96	1960	-21.97	-2.22	-0.02
29	SLU 36	-7	90	1943	-21.77	-1.81	-0.02
29	SLU 37	-8	96	1958	-21.96	-2.21	-0.02
29	SLU 38	-7	90	1941	-21.75	-1.8	-0.02
29	SLU 39	-8	95	1985	-22.11	-2.26	-0.02
29	SLU 40	-7	89	1968	-21.91	-1.84	-0.02
29	SLU 41	-8	96	2001	-22.4	-2.28	-0.03
29	SLU 42	-8	90	1984	-22.2	-1.86	-0.02
29	SLU 43	-8	112	2141	-23.12	-2.31	-0.03
29	SLU 44	-7	101	2113	-22.78	-1.62	-0.02

Nodo	Cont.	Reazione a traslazione			Reazione a rotazione		
Ind.	N.br.	x	y	z	x	y	z
29	SLU 45	-8	113	2159	-23.43	-2.34	-0.03
29	SLU 46	-8	107	2142	-23.23	-1.93	-0.02
29	SLU 47	-8	103	2129	-23.08	-1.64	-0.02
29	SLU 48	-8	114	2175	-23.73	-2.36	-0.03
29	SLU 49	-8	108	2158	-23.53	-1.95	-0.02
29	SLU 50	-8	114	2173	-23.71	-2.35	-0.03
29	SLU 51	-8	108	2156	-23.51	-1.94	-0.02
29	SLU 52	-8	105	2250	-24.52	-1.82	-0.03
29	SLU 53	-9	116	2297	-25.17	-2.54	-0.03
29	SLU 54	-8	110	2280	-24.96	-2.13	-0.03
29	SLU 55	-8	106	2267	-24.81	-1.84	-0.03
29	SLU 56	-9	117	2313	-25.46	-2.56	-0.03
29	SLU 57	-9	111	2296	-25.26	-2.15	-0.03
29	SLU 58	-9	117	2311	-25.45	-2.55	-0.03
29	SLU 59	-9	111	2294	-25.25	-2.14	-0.03
29	SLU 60	-9	116	2338	-25.6	-2.59	-0.03
29	SLU 61	-9	110	2321	-25.4	-2.18	-0.03
29	SLU 62	-9	118	2354	-25.89	-2.62	-0.03
29	SLU 63	-9	111	2337	-25.69	-2.2	-0.03
29	SLU 64	-9	115	2252	-24.58	-2.46	-0.03
29	SLU 65	-8	105	2224	-24.24	-1.77	-0.02
29	SLU 66	-9	116	2270	-24.89	-2.49	-0.03
29	SLU 67	-8	110	2253	-24.69	-2.08	-0.03
29	SLU 68	-8	106	2240	-24.54	-1.79	-0.03
29	SLU 69	-9	117	2287	-25.19	-2.52	-0.03
29	SLU 70	-8	111	2270	-24.98	-2.1	-0.03
29	SLU 71	-9	117	2285	-25.17	-2.51	-0.03
29	SLU 72	-8	111	2268	-24.97	-2.09	-0.03
29	SLU 73	-9	108	2362	-25.98	-1.97	-0.03
29	SLU 74	-9	120	2408	-26.62	-2.69	-0.03
29	SLU 75	-9	113	2391	-26.42	-2.28	-0.03
29	SLU 76	-9	109	2378	-26.27	-1.99	-0.03
29	SLU 77	-9	121	2424	-26.92	-2.72	-0.03
29	SLU 78	-9	115	2407	-26.72	-2.3	-0.03
29	SLU 79	-9	121	2423	-26.91	-2.71	-0.03
29	SLU 80	-9	115	2406	-26.7	-2.29	-0.03
29	SLU 81	-10	120	2449	-27.06	-2.75	-0.03
29	SLU 82	-9	114	2432	-26.86	-2.33	-0.03
29	SLU 83	-10	121	2465	-27.35	-2.77	-0.03
29	SLU 84	-9	115	2448	-27.15	-2.36	-0.03
29	SLE RA 1	-6	88	1708	-18.59	-1.86	-0.02
29	SLE RA 2	-6	81	1689	-18.36	-1.4	-0.02
29	SLE RA 3	-7	89	1720	-18.79	-1.88	-0.02
29	SLE RA 4	-6	84	1709	-18.66	-1.61	-0.02
29	SLE RA 5	-6	82	1700	-18.56	-1.41	-0.02
29	SLE RA 6	-7	89	1731	-18.99	-1.9	-0.02
29	SLE RA 7	-6	85	1720	-18.86	-1.62	-0.02
29	SLE RA 8	-7	89	1730	-18.98	-1.89	-0.02
29	SLE RA 9	-6	85	1718	-18.85	-1.61	-0.02
29	SLE RA 10	-7	83	1781	-19.52	-1.53	-0.02
29	SLE RA 11	-7	91	1812	-19.95	-2.01	-0.02
29	SLE RA 12	-7	87	1801	-19.82	-1.74	-0.02
29	SLE RA 13	-7	84	1792	-19.72	-1.55	-0.02
29	SLE RA 14	-7	92	1823	-20.15	-2.03	-0.02
29	SLE RA 15	-7	87	1811	-20.01	-1.75	-0.02
29	SLE RA 16	-7	92	1822	-20.14	-2.02	-0.02
29	SLE RA 17	-7	87	1810	-20	-1.75	-0.02
29	SLE RA 18	-7	91	1839	-20.24	-2.05	-0.02
29	SLE RA 19	-7	87	1828	-20.1	-1.78	-0.02
29	SLE RA 20	-7	92	1850	-20.44	-2.07	-0.02
29	SLE RA 21	-7	88	1839	-20.3	-1.79	-0.02
29	SLE FR 1	-6	88	1708	-18.59	-1.86	-0.02
29	SLE FR 2	-6	86	1704	-18.54	-1.77	-0.02
29	SLE FR 3	-7	88	1712	-18.66	-1.87	-0.02
29	SLE FR 4	-7	87	1744	-19.04	-1.83	-0.02
29	SLE FR 5	-7	89	1752	-19.16	-1.92	-0.02
29	SLE FR 6	-7	89	1774	-19.41	-1.96	-0.02
29	SLE QP 1	-6	88	1708	-18.59	-1.86	-0.02
29	SLE QP 2	-7	89	1747	-19.08	-1.92	-0.02
29	SLD 1	-3	165	1282	-18.88	0.18	-0.01
29	SLD 2	-3	165	1282	-18.88	0.18	-0.01
29	SLD 3	-3	88	1096	-14.35	2.18	0
29	SLD 4	-3	88	1096	-14.35	2.18	0
29	SLD 5	-7	230	1889	-25.9	-4.32	-0.03
29	SLD 6	-7	230	1889	-25.9	-4.32	-0.03
29	SLD 7	-4	-29	1270	-10.78	2.34	-0.01
29	SLD 8	-4	-29	1270	-10.78	2.34	-0.01
29	SLD 9	-9	207	2225	-27.38	-6.18	-0.04
29	SLD 10	-9	207	2225	-27.38	-6.18	-0.04
29	SLD 11	-6	-52	1605	-12.26	0.49	-0.01
29	SLD 12	-6	-52	1605	-12.26	0.49	-0.01
29	SLD 13	-11	90	2399	-23.82	-6.02	-0.04
29	SLD 14	-11	90	2399	-23.82	-6.02	-0.04
29	SLD 15	-10	12	2213	-19.28	-4.02	-0.03
29	SLD 16	-10	12	2213	-19.28	-4.02	-0.03
29	SLV 1	1	272	691	-18.72	2.93	0
29	SLV 2	1	272	691	-18.72	2.93	0
29	SLV 3	3	83	240	-7.82	7.77	0.02
29	SLV 4	3	83	240	-7.82	7.77	0.02
29	SLV 5	-8	430	2115	-35.5	-7.8	-0.04
29	SLV 6	-8	430	2115	-35.5	-7.8	-0.04

Nodo	Cont.	Reazione a traslazione			Reazione a rotazione		
Ind.	N.br.	x	y	z	x	y	z
29	SLV 7	-1	-199	611	0.82	8.33	0.02
29	SLV 8	-1	-199	611	0.82	8.33	0.02
29	SLV 9	-13	377	2884	-38.98	-12.16	-0.06
29	SLV 10	-13	377	2884	-38.98	-12.16	-0.06
29	SLV 11	-6	-253	1380	-2.67	3.97	0
29	SLV 12	-6	-253	1380	-2.67	3.97	0
29	SLV 13	-17	94	3255	-30.34	-11.61	-0.06
29	SLV 14	-17	94	3255	-30.34	-11.61	-0.06
29	SLV 15	-14	-95	2804	-19.44	-6.77	-0.04
29	SLV 16	-14	-95	2804	-19.44	-6.77	-0.04
30	SLU 1	0	1371	3496	-71.2	0.16	0
30	SLU 2	-1	1367	3485	-70.97	-0.11	0
30	SLU 3	0	1403	3561	-72.81	0.17	0
30	SLU 4	-1	1401	3555	-72.68	0	0
30	SLU 5	-1	1390	3536	-72.18	-0.11	0
30	SLU 6	-1	1427	3612	-74.02	0.17	0
30	SLU 7	-1	1424	3606	-73.88	0.01	0
30	SLU 8	-1	1418	3597	-73.61	0.17	0
30	SLU 9	-1	1416	3591	-73.47	0.01	0
30	SLU 10	-1	1550	3899	-80.32	-0.12	0
30	SLU 11	-1	1587	3975	-82.16	0.16	0
30	SLU 12	-1	1584	3969	-82.02	0	0
30	SLU 13	-1	1574	3950	-81.52	-0.11	0
30	SLU 14	-1	1611	4026	-83.36	0.17	0
30	SLU 15	-1	1608	4020	-83.23	0	0
30	SLU 16	-1	1602	4011	-82.95	0.17	0
30	SLU 17	-1	1600	4005	-82.82	0	0
30	SLU 18	-1	1634	4087	-84.55	0.16	0
30	SLU 19	-1	1631	4081	-84.41	-0.01	0
30	SLU 20	-1	1657	4138	-85.75	0.16	0
30	SLU 21	-1	1655	4131	-85.62	0	0
30	SLU 22	-1	1521	3818	-78.75	0.16	0
30	SLU 23	-1	1517	3807	-78.52	-0.12	0
30	SLU 24	-1	1553	3883	-80.36	0.16	0
30	SLU 25	-1	1551	3877	-80.23	0	0
30	SLU 26	-1	1540	3858	-79.73	-0.11	0
30	SLU 27	-1	1577	3934	-81.57	0.17	0
30	SLU 28	-1	1574	3928	-81.43	0	0
30	SLU 29	-1	1568	3919	-81.16	0.16	0
30	SLU 30	-1	1566	3913	-81.02	0	0
30	SLU 31	-2	1700	4221	-87.86	-0.12	0
30	SLU 32	-1	1737	4297	-89.7	0.16	0
30	SLU 33	-1	1734	4291	-89.57	-0.01	0
30	SLU 34	-2	1724	4272	-89.07	-0.12	0
30	SLU 35	-1	1761	4348	-90.91	0.16	0
30	SLU 36	-1	1758	4342	-90.77	0	0
30	SLU 37	-1	1752	4333	-90.5	0.16	0
30	SLU 38	-1	1749	4327	-90.36	0	0
30	SLU 39	-1	1783	4409	-92.09	0.15	0
30	SLU 40	-1	1781	4403	-91.96	-0.01	0
30	SLU 41	-1	1807	4460	-93.3	0.16	0
30	SLU 42	-1	1805	4453	-93.16	-0.01	0
30	SLU 43	-1	1731	4434	-89.97	0.21	0
30	SLU 44	-1	1727	4424	-89.75	-0.06	0
30	SLU 45	-1	1763	4500	-91.59	0.22	0
30	SLU 46	-1	1761	4494	-91.45	0.05	0
30	SLU 47	-1	1750	4474	-90.95	-0.06	0
30	SLU 48	-1	1787	4550	-92.79	0.22	0
30	SLU 49	-1	1784	4544	-92.66	0.06	0
30	SLU 50	-1	1778	4535	-92.38	0.22	0
30	SLU 51	-1	1776	4529	-92.25	0.06	0
30	SLU 52	-2	1910	4838	-99.09	-0.06	0
30	SLU 53	-1	1947	4914	-100.93	0.22	0
30	SLU 54	-1	1944	4907	-100.79	0.05	0
30	SLU 55	-2	1934	4888	-100.29	-0.06	0
30	SLU 56	-1	1971	4964	-102.13	0.22	0
30	SLU 57	-1	1968	4958	-102	0.05	0
30	SLU 58	-1	1962	4949	-101.72	0.22	0
30	SLU 59	-1	1959	4943	-101.59	0.05	0
30	SLU 60	-1	1993	5025	-103.32	0.21	0
30	SLU 61	-1	1991	5019	-103.18	0.04	0
30	SLU 62	-1	2017	5076	-104.52	0.21	0
30	SLU 63	-1	2015	5070	-104.39	0.05	0
30	SLU 64	-1	1881	4756	-97.52	0.21	0
30	SLU 65	-2	1877	4746	-97.29	-0.07	0
30	SLU 66	-1	1913	4822	-99.13	0.21	0
30	SLU 67	-1	1910	4816	-99	0.05	0
30	SLU 68	-2	1900	4796	-98.5	-0.06	0
30	SLU 69	-1	1937	4872	-100.34	0.22	0
30	SLU 70	-1	1934	4866	-100.2	0.05	0
30	SLU 71	-1	1928	4857	-99.93	0.22	0
30	SLU 72	-1	1926	4851	-99.79	0.05	0
30	SLU 73	-2	2060	5160	-106.64	-0.07	0
30	SLU 74	-1	2097	5236	-108.48	0.21	0
30	SLU 75	-1	2094	5229	-108.34	0.04	0
30	SLU 76	-2	2084	5210	-107.84	-0.07	0
30	SLU 77	-1	2120	5286	-109.68	0.21	0
30	SLU 78	-1	2118	5280	-109.55	0.05	0
30	SLU 79	-1	2112	5271	-109.27	0.21	0
30	SLU 80	-1	2109	5265	-109.14	0.05	0
30	SLU 81	-1	2143	5347	-110.86	0.2	0

Nodo	Cont.	Reazione a traslazione			Reazione a rotazione		
Ind.	N.br.	x	y	z	x	y	z
30	SLU 82	-1	2141	5341	-110.73	0.04	0
30	SLU 83	-1	2167	5398	-112.07	0.21	0
30	SLU 84	-1	2164	5392	-111.94	0.04	0
30	SLE RA 1	-1	1414	3588	-73.35	0.16	0
30	SLE RA 2	-1	1411	3581	-73.2	-0.02	0
30	SLE RA 3	-1	1435	3631	-74.43	0.16	0
30	SLE RA 4	-1	1434	3627	-74.34	0.06	0
30	SLE RA 5	-1	1427	3615	-74.01	-0.02	0
30	SLE RA 6	-1	1451	3665	-75.23	0.17	0
30	SLE RA 7	-1	1449	3661	-75.14	0.06	0
30	SLE RA 8	-1	1445	3655	-74.96	0.17	0
30	SLE RA 9	-1	1444	3651	-74.87	0.06	0
30	SLE RA 10	-1	1534	3857	-79.43	-0.02	0
30	SLE RA 11	-1	1558	3907	-80.66	0.16	0
30	SLE RA 12	-1	1556	3903	-80.57	0.05	0
30	SLE RA 13	-1	1549	3891	-80.24	-0.02	0
30	SLE RA 14	-1	1574	3941	-81.46	0.16	0
30	SLE RA 15	-1	1572	3937	-81.37	0.05	0
30	SLE RA 16	-1	1568	3931	-81.19	0.16	0
30	SLE RA 17	-1	1566	3927	-81.1	0.05	0
30	SLE RA 18	-1	1589	3982	-82.25	0.16	0
30	SLE RA 19	-1	1587	3978	-82.16	0.05	0
30	SLE RA 20	-1	1605	4016	-83.06	0.16	0
30	SLE RA 21	-1	1603	4012	-82.97	0.05	0
30	SLE FR 1	-1	1414	3588	-73.35	0.16	0
30	SLE FR 2	-1	1413	3586	-73.32	0.12	0
30	SLE FR 3	-1	1420	3601	-73.68	0.16	0
30	SLE FR 4	-1	1466	3705	-75.99	0.12	0
30	SLE FR 5	-1	1473	3719	-76.35	0.16	0
30	SLE FR 6	-1	1501	3785	-77.8	0.16	0
30	SLE QP 1	-1	1414	3588	-73.35	0.16	0
30	SLE QP 2	-1	1466	3706	-76.02	0.16	0
30	SLD 1	-2	2049	4500	-105.12	-0.36	-0.01
30	SLD 2	-2	2049	4500	-105.12	-0.36	-0.01
30	SLD 3	-4	1480	3832	-76.62	-1.08	0
30	SLD 4	-4	1480	3832	-76.62	-1.08	0
30	SLD 5	2	2504	4957	-127.98	1.09	-0.01
30	SLD 6	2	2504	4957	-127.98	1.09	-0.01
30	SLD 7	-5	608	2731	-32.98	-1.3	0
30	SLD 8	-5	608	2731	-32.98	-1.3	0
30	SLD 9	3	2325	4680	-119.07	1.62	-0.01
30	SLD 10	3	2325	4680	-119.07	1.62	-0.01
30	SLD 11	-3	429	2455	-24.07	-0.77	0.01
30	SLD 12	-3	429	2455	-24.07	-0.77	0.01
30	SLD 13	3	1453	3579	-75.42	1.4	0
30	SLD 14	3	1453	3579	-75.42	1.4	0
30	SLD 15	1	884	2912	-46.93	0.68	0
30	SLD 16	1	884	2912	-46.93	0.68	0
30	SLV 1	-4	2809	5535	-143.18	-1.03	-0.01
30	SLV 2	-4	2809	5535	-143.18	-1.03	-0.01
30	SLV 3	-9	1483	3975	-76.74	-2.78	0
30	SLV 4	-9	1483	3975	-76.74	-2.78	0
30	SLV 5	5	3880	6622	-196.95	2.45	-0.02
30	SLV 6	5	3880	6622	-196.95	2.45	-0.02
30	SLV 7	-10	-540	1420	24.54	-3.38	0.01
30	SLV 8	-10	-540	1420	24.54	-3.38	0.01
30	SLV 9	9	3473	5992	-176.59	3.7	-0.01
30	SLV 10	9	3473	5992	-176.59	3.7	-0.01
30	SLV 11	-7	-948	790	44.9	-2.13	0.02
30	SLV 12	-7	-948	790	44.9	-2.13	0.02
30	SLV 13	8	1449	3437	-75.31	3.1	0
30	SLV 14	8	1449	3437	-75.31	3.1	0
30	SLV 15	3	123	1876	-8.87	1.36	0.01
30	SLV 16	3	123	1876	-8.87	1.36	0.01
31	SLU 1	17	311	3900	-0.16	3.01	-0.23
31	SLU 2	16	240	3902	5.02	2.84	-0.23
31	SLU 3	17	318	3957	-0.06	3.05	-0.23
31	SLU 4	17	275	3958	3.05	2.95	-0.23
31	SLU 5	16	243	3947	5.08	2.87	-0.23
31	SLU 6	17	321	4002	-0.01	3.08	-0.24
31	SLU 7	17	279	4003	3.11	2.98	-0.23
31	SLU 8	17	318	3990	-0.06	3.08	-0.23
31	SLU 9	17	275	3991	3.06	2.98	-0.23
31	SLU 10	18	288	4324	5.61	3.2	-0.26
31	SLU 11	19	366	4379	0.53	3.41	-0.27
31	SLU 12	19	323	4380	3.64	3.31	-0.27
31	SLU 13	18	291	4369	5.67	3.23	-0.27
31	SLU 14	19	369	4424	0.59	3.44	-0.27
31	SLU 15	19	327	4425	3.7	3.34	-0.27
31	SLU 16	19	366	4412	0.53	3.44	-0.27
31	SLU 17	19	323	4413	3.65	3.34	-0.27
31	SLU 18	20	379	4503	0.68	3.52	-0.28
31	SLU 19	19	337	4504	3.79	3.42	-0.28
31	SLU 20	20	383	4548	0.73	3.55	-0.28
31	SLU 21	20	340	4549	3.85	3.45	-0.28
31	SLU 22	18	352	4251	0.47	3.27	-0.26
31	SLU 23	18	281	4253	5.66	3.1	-0.26
31	SLU 24	19	359	4308	0.57	3.31	-0.27
31	SLU 25	18	317	4309	3.69	3.21	-0.26
31	SLU 26	18	285	4298	5.71	3.13	-0.26
31	SLU 27	19	363	4353	0.63	3.34	-0.27

Nodo	Cont.	Reazione a traslazione			Reazione a rotazione		
Ind.	N.br.	x	y	z	x	y	z
31	SLU 28	19	320	4354	3.74	3.24	-0.27
31	SLU 29	19	359	4341	0.58	3.34	-0.27
31	SLU 30	18	317	4342	3.69	3.24	-0.26
31	SLU 31	20	329	4675	6.25	3.46	-0.3
31	SLU 32	21	407	4730	1.17	3.67	-0.3
31	SLU 33	21	365	4731	4.28	3.57	-0.3
31	SLU 34	20	333	4720	6.3	3.49	-0.3
31	SLU 35	21	411	4775	1.22	3.7	-0.31
31	SLU 36	21	368	4776	4.33	3.6	-0.3
31	SLU 37	21	407	4763	1.17	3.69	-0.3
31	SLU 38	21	365	4764	4.28	3.59	-0.3
31	SLU 39	22	421	4854	1.31	3.78	-0.31
31	SLU 40	21	378	4855	4.43	3.68	-0.31
31	SLU 41	22	425	4899	1.37	3.81	-0.32
31	SLU 42	21	382	4900	4.48	3.71	-0.31
31	SLU 43	21	390	4949	-0.43	3.82	-0.29
31	SLU 44	20	319	4951	4.76	3.65	-0.28
31	SLU 45	21	397	5006	-0.33	3.86	-0.29
31	SLU 46	21	354	5007	2.79	3.76	-0.29
31	SLU 47	21	322	4996	4.81	3.69	-0.29
31	SLU 48	22	400	5051	-0.27	3.9	-0.29
31	SLU 49	21	357	5052	2.84	3.8	-0.29
31	SLU 50	22	397	5039	-0.32	3.89	-0.29
31	SLU 51	21	354	5040	2.79	3.79	-0.29
31	SLU 52	23	367	5374	5.35	4.01	-0.32
31	SLU 53	24	445	5429	0.26	4.22	-0.33
31	SLU 54	23	402	5430	3.38	4.12	-0.33
31	SLU 55	23	370	5419	5.4	4.05	-0.32
31	SLU 56	24	448	5474	0.32	4.25	-0.33
31	SLU 57	23	405	5475	3.43	4.15	-0.33
31	SLU 58	24	445	5461	0.27	4.25	-0.33
31	SLU 59	23	402	5463	3.38	4.15	-0.33
31	SLU 60	24	458	5553	0.41	4.33	-0.34
31	SLU 61	24	416	5554	3.53	4.23	-0.34
31	SLU 62	24	462	5598	0.47	4.37	-0.34
31	SLU 63	24	419	5599	3.58	4.27	-0.34
31	SLU 64	23	431	5300	0.2	4.08	-0.32
31	SLU 65	22	360	5302	5.39	3.91	-0.32
31	SLU 66	23	438	5357	0.31	4.12	-0.32
31	SLU 67	23	396	5359	3.42	4.02	-0.32
31	SLU 68	22	364	5347	5.44	3.95	-0.32
31	SLU 69	23	442	5402	0.36	4.15	-0.33
31	SLU 70	23	399	5403	3.47	4.05	-0.32
31	SLU 71	23	438	5390	0.31	4.15	-0.32
31	SLU 72	23	396	5391	3.42	4.05	-0.32
31	SLU 73	24	408	5725	5.98	4.27	-0.35
31	SLU 74	25	486	5780	0.9	4.48	-0.36
31	SLU 75	25	444	5781	4.01	4.38	-0.36
31	SLU 76	25	412	5770	6.04	4.31	-0.36
31	SLU 77	26	490	5825	0.95	4.51	-0.36
31	SLU 78	25	447	5826	4.07	4.41	-0.36
31	SLU 79	25	486	5813	0.9	4.51	-0.36
31	SLU 80	25	444	5814	4.01	4.41	-0.36
31	SLU 81	26	500	5904	1.05	4.59	-0.37
31	SLU 82	26	457	5905	4.16	4.49	-0.37
31	SLU 83	26	503	5949	1.1	4.63	-0.37
31	SLU 84	26	461	5950	4.21	4.53	-0.37
31	SLE RA 1	17	323	4000	0.02	3.08	-0.24
31	SLE RA 2	17	275	4001	3.47	2.97	-0.24
31	SLE RA 3	17	327	4038	0.09	3.11	-0.24
31	SLE RA 4	17	299	4039	2.16	3.04	-0.24
31	SLE RA 5	17	278	4031	3.51	2.99	-0.24
31	SLE RA 6	18	330	4068	0.12	3.13	-0.24
31	SLE RA 7	17	301	4069	2.2	3.06	-0.24
31	SLE RA 8	17	327	4060	0.09	3.13	-0.24
31	SLE RA 9	17	299	4061	2.16	3.06	-0.24
31	SLE RA 10	18	307	4283	3.87	3.21	-0.26
31	SLE RA 11	19	359	4320	0.48	3.35	-0.27
31	SLE RA 12	19	331	4320	2.56	3.28	-0.26
31	SLE RA 13	18	310	4313	3.9	3.23	-0.26
31	SLE RA 14	19	362	4350	0.52	3.37	-0.27
31	SLE RA 15	19	333	4350	2.59	3.3	-0.27
31	SLE RA 16	19	359	4342	0.48	3.37	-0.27
31	SLE RA 17	19	331	4342	2.56	3.3	-0.26
31	SLE RA 18	19	368	4402	0.58	3.42	-0.27
31	SLE RA 19	19	340	4403	2.65	3.35	-0.27
31	SLE RA 20	19	371	4432	0.62	3.45	-0.28
31	SLE RA 21	19	342	4433	2.69	3.38	-0.27
31	SLE FR 1	17	323	4000	0.02	3.08	-0.24
31	SLE FR 2	17	313	4000	0.71	3.06	-0.24
31	SLE FR 3	17	324	4012	0.03	3.09	-0.24
31	SLE FR 4	18	327	4121	0.88	3.16	-0.25
31	SLE FR 5	18	337	4133	0.2	3.19	-0.25
31	SLE FR 6	18	346	4201	0.3	3.25	-0.26
31	SLE QP 1	17	323	4000	0.02	3.08	-0.24
31	SLE QP 2	18	336	4121	0.19	3.18	-0.25
31	SLD 1	26	350	4802	-18.55	5.37	-0.18
31	SLD 2	26	350	4802	-18.55	5.37	-0.18
31	SLD 3	21	-13	4297	4.84	4.21	-0.15
31	SLD 4	21	-13	4297	4.84	4.21	-0.15
31	SLD 5	27	891	5091	-40.91	5.6	-0.28

Nodo	Cont.	Reazione a traslazione			Reazione a rotazione		
Ind.	N.br.	x	y	z	x	y	z
31	SLD 6	27	891	5091	-40.91	5.6	-0.28
31	SLD 7	12	-318	3408	37.06	1.73	-0.17
31	SLD 8	12	-318	3408	37.06	1.73	-0.17
31	SLD 9	23	991	4833	-36.69	4.64	-0.32
31	SLD 10	23	991	4833	-36.69	4.64	-0.32
31	SLD 11	9	-218	3151	41.28	0.76	-0.22
31	SLD 12	9	-218	3151	41.28	0.76	-0.22
31	SLD 13	14	686	3945	-4.47	2.16	-0.34
31	SLD 14	14	686	3945	-4.47	2.16	-0.34
31	SLD 15	10	323	3440	18.92	0.99	-0.31
31	SLD 16	10	323	3440	18.92	0.99	-0.31
31	SLV 1	37	378	5705	-46.12	8.36	-0.1
31	SLV 2	37	378	5705	-46.12	8.36	-0.1
31	SLV 3	26	-497	4528	11.16	5.53	-0.03
31	SLV 4	26	-497	4528	11.16	5.53	-0.03
31	SLV 5	40	1676	6381	-100.58	9.03	-0.32
31	SLV 6	40	1676	6381	-100.58	9.03	-0.32
31	SLV 7	4	-1241	2458	90.35	-0.41	-0.07
31	SLV 8	4	-1241	2458	90.35	-0.41	-0.07
31	SLV 9	32	1914	5784	-89.98	6.78	-0.42
31	SLV 10	32	1914	5784	-89.98	6.78	-0.42
31	SLV 11	-4	-1003	1860	100.95	-2.67	-0.18
31	SLV 12	-4	-1003	1860	100.95	-2.67	-0.18
31	SLV 13	10	1170	3713	-10.79	0.84	-0.47
31	SLV 14	10	1170	3713	-10.79	0.84	-0.47
31	SLV 15	-1	295	2536	46.49	-2	-0.4
31	SLV 16	-1	295	2536	46.49	-2	-0.4
32	SLU 1	-1	846	2900	-27.59	-0.7	0
32	SLU 2	-1	843	2905	-27.45	-0.54	0
32	SLU 3	-1	866	2955	-28.29	-0.72	0
32	SLU 4	-1	864	2958	-28.21	-0.63	0
32	SLU 5	-1	857	2945	-27.93	-0.56	0
32	SLU 6	-1	880	2995	-28.78	-0.74	0.01
32	SLU 7	-1	879	2998	-28.7	-0.64	0
32	SLU 8	-1	875	2981	-28.56	-0.73	0
32	SLU 9	-1	873	2983	-28.48	-0.64	0
32	SLU 10	-1	975	3284	-32.18	-0.63	0
32	SLU 11	-2	999	3334	-33.03	-0.81	0.01
32	SLU 12	-1	997	3337	-32.94	-0.71	0.01
32	SLU 13	-1	990	3325	-32.67	-0.64	0.01
32	SLU 14	-2	1013	3375	-33.52	-0.82	0.01
32	SLU 15	-1	1011	3377	-33.43	-0.73	0.01
32	SLU 16	-2	1007	3360	-33.29	-0.82	0.01
32	SLU 17	-1	1005	3363	-33.21	-0.72	0.01
32	SLU 18	-2	1035	3442	-34.35	-0.83	0.01
32	SLU 19	-1	1034	3445	-34.27	-0.73	0.01
32	SLU 20	-2	1050	3483	-34.84	-0.84	0.01
32	SLU 21	-1	1048	3485	-34.75	-0.75	0.01
32	SLU 22	-1	946	3184	-31.11	-0.77	0.01
32	SLU 23	-1	943	3188	-30.97	-0.62	0
32	SLU 24	-1	966	3238	-31.82	-0.79	0.01
32	SLU 25	-1	965	3241	-31.73	-0.7	0.01
32	SLU 26	-1	957	3229	-31.46	-0.63	0.01
32	SLU 27	-2	981	3279	-32.31	-0.81	0.01
32	SLU 28	-1	979	3281	-32.22	-0.71	0.01
32	SLU 29	-2	975	3264	-32.09	-0.8	0.01
32	SLU 30	-1	973	3267	-32	-0.71	0.01
32	SLU 31	-1	1076	3568	-35.71	-0.7	0.01
32	SLU 32	-2	1099	3618	-36.55	-0.88	0.01
32	SLU 33	-1	1097	3621	-36.47	-0.79	0.01
32	SLU 34	-1	1090	3608	-36.19	-0.72	0.01
32	SLU 35	-2	1114	3658	-37.04	-0.9	0.01
32	SLU 36	-1	1112	3661	-36.96	-0.8	0.01
32	SLU 37	-2	1108	3644	-36.82	-0.89	0.01
32	SLU 38	-1	1106	3647	-36.74	-0.8	0.01
32	SLU 39	-2	1136	3726	-37.87	-0.9	0.01
32	SLU 40	-1	1134	3729	-37.79	-0.8	0.01
32	SLU 41	-2	1150	3766	-38.36	-0.91	0.01
32	SLU 42	-1	1148	3769	-38.28	-0.82	0.01
32	SLU 43	-2	1065	3673	-34.66	-0.89	0.01
32	SLU 44	-1	1062	3678	-34.52	-0.73	0.01
32	SLU 45	-2	1085	3727	-35.36	-0.91	0.01
32	SLU 46	-1	1083	3730	-35.28	-0.81	0.01
32	SLU 47	-1	1076	3718	-35	-0.74	0.01
32	SLU 48	-2	1100	3768	-35.85	-0.92	0.01
32	SLU 49	-1	1098	3771	-35.77	-0.83	0.01
32	SLU 50	-2	1094	3753	-35.63	-0.92	0.01
32	SLU 51	-1	1092	3756	-35.55	-0.82	0.01
32	SLU 52	-1	1195	4057	-39.25	-0.81	0.01
32	SLU 53	-2	1218	4107	-40.1	-0.99	0.01
32	SLU 54	-2	1216	4110	-40.01	-0.9	0.01
32	SLU 55	-1	1209	4097	-39.74	-0.83	0.01
32	SLU 56	-2	1233	4147	-40.58	-1.01	0.01
32	SLU 57	-2	1231	4150	-40.5	-0.91	0.01
32	SLU 58	-2	1227	4133	-40.36	-1	0.01
32	SLU 59	-2	1225	4136	-40.28	-0.91	0.01
32	SLU 60	-2	1255	4215	-41.42	-1.01	0.01
32	SLU 61	-2	1253	4218	-41.33	-0.92	0.01
32	SLU 62	-2	1269	4255	-41.9	-1.03	0.01
32	SLU 63	-2	1267	4258	-41.82	-0.93	0.01
32	SLU 64	-2	1165	3956	-38.18	-0.96	0.01

Nodo	Cont.	Reazione a traslazione			Reazione a rotazione		
Ind.	N.br.	x	y	z	x	y	z
32	SLU 65	-1	1162	3961	-38.04	-0.8	0.01
32	SLU 66	-2	1186	4011	-38.89	-0.98	0.01
32	SLU 67	-2	1184	4014	-38.8	-0.88	0.01
32	SLU 68	-1	1177	4001	-38.53	-0.82	0.01
32	SLU 69	-2	1200	4051	-39.37	-0.99	0.01
32	SLU 70	-2	1198	4054	-39.29	-0.9	0.01
32	SLU 71	-2	1194	4037	-39.15	-0.99	0.01
32	SLU 72	-2	1192	4040	-39.07	-0.89	0.01
32	SLU 73	-1	1295	4341	-42.77	-0.89	0.01
32	SLU 74	-2	1319	4391	-43.62	-1.07	0.01
32	SLU 75	-2	1317	4393	-43.54	-0.97	0.01
32	SLU 76	-1	1310	4381	-43.26	-0.9	0.01
32	SLU 77	-2	1333	4431	-44.11	-1.08	0.01
32	SLU 78	-2	1331	4434	-44.02	-0.99	0.01
32	SLU 79	-2	1327	4417	-43.89	-1.08	0.01
32	SLU 80	-2	1325	4419	-43.8	-0.98	0.01
32	SLU 81	-2	1355	4499	-44.94	-1.08	0.01
32	SLU 82	-2	1353	4501	-44.86	-0.99	0.01
32	SLU 83	-2	1369	4539	-45.43	-1.1	0.01
32	SLU 84	-2	1368	4542	-45.34	-1	0.01
32	SLE RA 1	-1	874	2981	-28.59	-0.72	0
32	SLE RA 2	-1	872	2984	-28.5	-0.62	0
32	SLE RA 3	-1	888	3018	-29.07	-0.73	0
32	SLE RA 4	-1	887	3019	-29.01	-0.67	0
32	SLE RA 5	-1	882	3011	-28.83	-0.63	0
32	SLE RA 6	-1	898	3044	-29.39	-0.75	0.01
32	SLE RA 7	-1	896	3046	-29.33	-0.68	0
32	SLE RA 8	-1	894	3035	-29.24	-0.74	0.01
32	SLE RA 9	-1	892	3037	-29.19	-0.68	0
32	SLE RA 10	-1	961	3237	-31.66	-0.67	0.01
32	SLE RA 11	-1	976	3271	-32.22	-0.79	0.01
32	SLE RA 12	-1	975	3272	-32.17	-0.73	0.01
32	SLE RA 13	-1	970	3264	-31.98	-0.68	0.01
32	SLE RA 14	-2	986	3297	-32.55	-0.8	0.01
32	SLE RA 15	-1	985	3299	-32.49	-0.74	0.01
32	SLE RA 16	-2	982	3288	-32.4	-0.8	0.01
32	SLE RA 17	-1	981	3290	-32.34	-0.74	0.01
32	SLE RA 18	-2	1001	3343	-33.1	-0.8	0.01
32	SLE RA 19	-1	1000	3344	-33.05	-0.74	0.01
32	SLE RA 20	-2	1010	3369	-33.43	-0.81	0.01
32	SLE RA 21	-1	1009	3371	-33.37	-0.75	0.01
32	SLE FR 1	-1	874	2981	-28.59	-0.72	0
32	SLE FR 2	-1	874	2982	-28.58	-0.7	0
32	SLE FR 3	-1	878	2992	-28.72	-0.73	0
32	SLE FR 4	-1	912	3090	-29.93	-0.72	0
32	SLE FR 5	-1	916	3100	-30.08	-0.75	0.01
32	SLE FR 6	-1	938	3162	-30.85	-0.76	0.01
32	SLE QP 1	-1	874	2981	-28.59	-0.72	0
32	SLE QP 2	-1	912	3090	-29.95	-0.75	0.01
32	SLD 1	-4	927	3013	-30.8	-1.44	0.01
32	SLD 2	-4	927	3013	-30.8	-1.44	0.01
32	SLD 3	-2	494	2528	-11.67	-1.11	0.01
32	SLD 4	-2	494	2528	-11.67	-1.11	0.01
32	SLD 5	-4	1573	3803	-59.21	-1.46	0.01
32	SLD 6	-4	1573	3803	-59.21	-1.46	0.01
32	SLD 7	0	130	2185	4.55	-0.35	0
32	SLD 8	0	130	2185	4.55	-0.35	0
32	SLD 9	-3	1694	3995	-64.44	-1.14	0.01
32	SLD 10	-3	1694	3995	-64.44	-1.14	0.01
32	SLD 11	1	252	2376	-0.68	-0.04	0
32	SLD 12	1	252	2376	-0.68	-0.04	0
32	SLD 13	0	1331	3652	-48.22	-0.38	0
32	SLD 14	0	1331	3652	-48.22	-0.38	0
32	SLD 15	1	898	3166	-29.09	-0.05	0
32	SLD 16	1	898	3166	-29.09	-0.05	0
32	SLV 1	-6	954	2927	-32.32	-2.38	0.02
32	SLV 2	-6	954	2927	-32.32	-2.38	0.02
32	SLV 3	-4	-55	1791	12.29	-1.59	0.01
32	SLV 4	-4	-55	1791	12.29	-1.59	0.01
32	SLV 5	-7	2455	4763	-98.3	-2.43	0.02
32	SLV 6	-7	2455	4763	-98.3	-2.43	0.02
32	SLV 7	2	-908	977	50.37	0.19	-0.01
32	SLV 8	2	-908	977	50.37	0.19	-0.01
32	SLV 9	-5	2733	5202	-110.26	-1.69	0.02
32	SLV 10	-5	2733	5202	-110.26	-1.69	0.02
32	SLV 11	4	-631	1416	38.41	0.94	-0.01
32	SLV 12	4	-631	1416	38.41	0.94	-0.01
32	SLV 13	1	1879	4388	-72.18	0.1	0
32	SLV 14	1	1879	4388	-72.18	0.1	0
32	SLV 15	4	870	3252	-27.58	0.89	-0.01
32	SLV 16	4	870	3252	-27.58	0.89	-0.01
33	SLU 1	-4	-119	1157	12.71	-1.76	-0.01
33	SLU 2	-3	-134	1182	14.26	-0.36	-0.01
33	SLU 3	-4	-121	1166	12.94	-1.79	-0.01
33	SLU 4	-3	-131	1181	13.88	-0.96	-0.01
33	SLU 5	-3	-137	1190	14.5	-0.39	-0.01
33	SLU 6	-4	-124	1174	13.18	-1.82	-0.01
33	SLU 7	-3	-133	1189	14.11	-0.98	-0.01
33	SLU 8	-4	-124	1174	13.18	-1.8	-0.01
33	SLU 9	-3	-133	1189	14.11	-0.97	-0.01
33	SLU 10	-3	-150	1254	15.69	-0.56	-0.01

Nodo	Cont.	Reazione a traslazione			Reazione a rotazione		
Ind.	N.br.	x	y	z	x	y	z
33	SLU 11	-4	-137	1237	14.37	-1.99	-0.01
33	SLU 12	-4	-146	1252	15.31	-1.16	-0.01
33	SLU 13	-3	-153	1262	15.93	-0.59	-0.01
33	SLU 14	-5	-139	1246	14.61	-2.01	-0.01
33	SLU 15	-4	-149	1261	15.54	-1.18	-0.01
33	SLU 16	-4	-139	1245	14.61	-2	-0.01
33	SLU 17	-4	-149	1260	15.55	-1.17	-0.01
33	SLU 18	-5	-142	1259	14.75	-2.04	-0.01
33	SLU 19	-4	-151	1274	15.68	-1.2	-0.01
33	SLU 20	-5	-144	1268	14.99	-2.06	-0.01
33	SLU 21	-4	-153	1283	15.92	-1.23	-0.01
33	SLU 22	-4	-132	1215	13.88	-1.91	-0.01
33	SLU 23	-3	-147	1240	15.44	-0.52	-0.01
33	SLU 24	-4	-134	1223	14.12	-1.95	-0.01
33	SLU 25	-4	-143	1238	15.05	-1.11	-0.01
33	SLU 26	-3	-149	1248	15.68	-0.54	-0.01
33	SLU 27	-4	-136	1232	14.35	-1.97	-0.01
33	SLU 28	-4	-146	1247	15.29	-1.14	-0.01
33	SLU 29	-4	-136	1231	14.36	-1.96	-0.01
33	SLU 30	-4	-146	1246	15.29	-1.12	-0.01
33	SLU 31	-4	-163	1311	16.87	-0.72	-0.01
33	SLU 32	-5	-150	1295	15.55	-2.14	-0.01
33	SLU 33	-4	-159	1310	16.48	-1.31	-0.01
33	SLU 34	-4	-165	1320	17.11	-0.74	-0.01
33	SLU 35	-5	-152	1304	15.79	-2.17	-0.01
33	SLU 36	-4	-161	1319	16.72	-1.33	-0.01
33	SLU 37	-5	-152	1303	15.79	-2.16	-0.01
33	SLU 38	-4	-161	1318	16.72	-1.32	-0.01
33	SLU 39	-5	-155	1317	15.93	-2.19	-0.01
33	SLU 40	-4	-164	1332	16.86	-1.36	-0.01
33	SLU 41	-5	-157	1325	16.16	-2.22	-0.01
33	SLU 42	-4	-166	1340	17.1	-1.38	-0.01
33	SLU 43	-5	-151	1484	16.12	-2.23	-0.01
33	SLU 44	-4	-166	1509	17.67	-0.84	-0.01
33	SLU 45	-5	-153	1493	16.35	-2.27	-0.01
33	SLU 46	-4	-162	1508	17.29	-1.43	-0.01
33	SLU 47	-4	-168	1517	17.91	-0.86	-0.01
33	SLU 48	-5	-155	1501	16.59	-2.29	-0.01
33	SLU 49	-4	-164	1516	17.52	-1.46	-0.01
33	SLU 50	-5	-155	1501	16.59	-2.28	-0.01
33	SLU 51	-4	-164	1516	17.52	-1.44	-0.01
33	SLU 52	-4	-182	1581	19.1	-1.04	-0.01
33	SLU 53	-6	-169	1565	17.78	-2.46	-0.01
33	SLU 54	-5	-178	1580	18.72	-1.63	-0.01
33	SLU 55	-4	-184	1589	19.34	-1.06	-0.01
33	SLU 56	-6	-171	1573	18.02	-2.49	-0.01
33	SLU 57	-5	-180	1588	18.95	-1.65	-0.01
33	SLU 58	-6	-171	1573	18.02	-2.48	-0.01
33	SLU 59	-5	-180	1588	18.95	-1.64	-0.01
33	SLU 60	-6	-173	1587	18.16	-2.51	-0.01
33	SLU 61	-5	-182	1602	19.09	-1.68	-0.01
33	SLU 62	-6	-175	1595	18.4	-2.54	-0.01
33	SLU 63	-5	-185	1610	19.33	-1.7	-0.01
33	SLU 64	-5	-163	1542	17.29	-2.39	-0.01
33	SLU 65	-4	-179	1567	18.85	-0.99	-0.01
33	SLU 66	-5	-166	1551	17.53	-2.42	-0.01
33	SLU 67	-5	-175	1566	18.46	-1.59	-0.01
33	SLU 68	-4	-181	1575	19.09	-1.02	-0.01
33	SLU 69	-5	-168	1559	17.76	-2.45	-0.01
33	SLU 70	-5	-177	1574	18.7	-1.61	-0.01
33	SLU 71	-5	-168	1559	17.77	-2.43	-0.01
33	SLU 72	-5	-177	1574	18.7	-1.6	-0.01
33	SLU 73	-5	-194	1639	20.28	-1.19	-0.01
33	SLU 74	-6	-181	1622	18.96	-2.62	-0.01
33	SLU 75	-5	-191	1637	19.89	-1.78	-0.01
33	SLU 76	-5	-197	1647	20.52	-1.21	-0.01
33	SLU 77	-6	-184	1631	19.19	-2.64	-0.01
33	SLU 78	-5	-193	1646	20.13	-1.81	-0.01
33	SLU 79	-6	-184	1630	19.2	-2.63	-0.01
33	SLU 80	-5	-193	1645	20.13	-1.79	-0.01
33	SLU 81	-6	-186	1644	19.34	-2.67	-0.01
33	SLU 82	-5	-195	1659	20.27	-1.83	-0.01
33	SLU 83	-6	-188	1653	19.57	-2.69	-0.01
33	SLU 84	-5	-197	1668	20.51	-1.85	-0.01
33	SLE RA 1	-4	-123	1173	13.04	-1.8	-0.01
33	SLE RA 2	-3	-133	1190	14.08	-0.87	-0.01
33	SLE RA 3	-4	-124	1179	13.2	-1.83	-0.01
33	SLE RA 4	-4	-130	1189	13.82	-1.27	-0.01
33	SLE RA 5	-3	-135	1196	14.24	-0.89	-0.01
33	SLE RA 6	-4	-126	1185	13.36	-1.84	-0.01
33	SLE RA 7	-4	-132	1195	13.98	-1.28	-0.01
33	SLE RA 8	-4	-126	1185	13.36	-1.83	-0.01
33	SLE RA 9	-4	-132	1195	13.98	-1.28	-0.01
33	SLE RA 10	-4	-144	1238	15.03	-1	-0.01
33	SLE RA 11	-4	-135	1227	14.15	-1.96	-0.01
33	SLE RA 12	-4	-141	1237	14.78	-1.4	-0.01
33	SLE RA 13	-4	-145	1243	15.19	-1.02	-0.01
33	SLE RA 14	-4	-136	1233	14.31	-1.97	-0.01
33	SLE RA 15	-4	-142	1243	14.93	-1.42	-0.01
33	SLE RA 16	-4	-136	1232	14.31	-1.96	-0.01
33	SLE RA 17	-4	-142	1242	14.94	-1.41	-0.01

Nodo	Cont.	Reazione a traslazione			Reazione a rotazione		
Ind.	N.br.	x	y	z	x	y	z
33	SLE RA 18	-4	-138	1242	14.41	-1.99	-0.01
33	SLE RA 19	-4	-144	1252	15.03	-1.43	-0.01
33	SLE RA 20	-5	-139	1247	14.56	-2	-0.01
33	SLE RA 21	-4	-146	1257	15.19	-1.45	-0.01
33	SLE FR 1	-4	-123	1173	13.04	-1.8	-0.01
33	SLE FR 2	-4	-125	1177	13.25	-1.62	-0.01
33	SLE FR 3	-4	-123	1176	13.11	-1.81	-0.01
33	SLE FR 4	-4	-129	1197	13.66	-1.67	-0.01
33	SLE FR 5	-4	-128	1196	13.51	-1.86	-0.01
33	SLE FR 6	-4	-130	1208	13.72	-1.89	-0.01
33	SLE QP 1	-4	-123	1173	13.04	-1.8	-0.01
33	SLE QP 2	-4	-127	1194	13.45	-1.86	-0.01
33	SLD 1	-1	-28	961	5.88	1.61	0
33	SLD 2	-1	-28	961	5.88	1.61	0
33	SLD 3	2	-116	843	12.65	5.97	0.01
33	SLD 4	2	-116	843	12.65	5.97	0.01
33	SLD 5	-7	37	1302	0.92	-7.42	-0.02
33	SLD 6	-7	37	1302	0.92	-7.42	-0.02
33	SLD 7	1	-258	910	23.47	7.1	0.01
33	SLD 8	1	-258	910	23.47	7.1	0.01
33	SLD 9	-10	4	1477	3.43	-10.81	-0.03
33	SLD 10	-10	4	1477	3.43	-10.81	-0.03
33	SLD 11	-2	-292	1085	25.98	3.71	0
33	SLD 12	-2	-292	1085	25.98	3.71	0
33	SLD 13	-10	-138	1544	14.26	-9.69	-0.03
33	SLD 14	-10	-138	1544	14.26	-9.69	-0.03
33	SLD 15	-8	-227	1427	21.02	-5.33	-0.02
33	SLD 16	-8	-227	1427	21.02	-5.33	-0.02
33	SLV 1	4	112	667	-4.87	6.16	0.02
33	SLV 2	4	112	667	-4.87	6.16	0.02
33	SLV 3	10	-105	374	11.98	16.66	0.04
33	SLV 4	10	-105	374	11.98	16.66	0.04
33	SLV 5	-11	273	1480	-17.59	-15.38	-0.03
33	SLV 6	-11	273	1480	-17.59	-15.38	-0.03
33	SLV 7	9	-450	503	38.56	19.62	0.04
33	SLV 8	9	-450	503	38.56	19.62	0.04
33	SLV 9	-17	195	1884	-11.65	-23.34	-0.06
33	SLV 10	-17	195	1884	-11.65	-23.34	-0.06
33	SLV 11	2	-528	907	44.5	11.66	0.01
33	SLV 12	2	-528	907	44.5	11.66	0.01
33	SLV 13	-19	-149	2014	14.93	-20.38	-0.06
33	SLV 14	-19	-149	2014	14.93	-20.38	-0.06
33	SLV 15	-13	-366	1721	31.77	-9.88	-0.04
33	SLV 16	-13	-366	1721	31.77	-9.88	-0.04
34	SLU 1	0	992	4028	-33.03	0.55	0.02
34	SLU 2	-1	985	4007	-32.94	0.18	0.01
34	SLU 3	0	1017	4109	-33.94	0.57	0.02
34	SLU 4	-1	1014	4096	-33.88	0.35	0.01
34	SLU 5	-1	1003	4067	-33.57	0.2	0.01
34	SLU 6	0	1036	4169	-34.57	0.58	0.02
34	SLU 7	-1	1032	4156	-34.51	0.36	0.01
34	SLU 8	0	1028	4149	-34.29	0.58	0.02
34	SLU 9	-1	1024	4136	-34.24	0.35	0.01
34	SLU 10	-2	1130	4509	-37.79	0.21	0.01
34	SLU 11	0	1162	4611	-38.79	0.59	0.02
34	SLU 12	-1	1158	4598	-38.73	0.37	0.01
34	SLU 13	-2	1148	4570	-38.42	0.22	0.01
34	SLU 14	0	1180	4672	-39.42	0.6	0.02
34	SLU 15	-1	1176	4659	-39.36	0.38	0.01
34	SLU 16	0	1173	4652	-39.15	0.6	0.02
34	SLU 17	-1	1169	4639	-39.09	0.38	0.01
34	SLU 18	-1	1199	4746	-39.96	0.59	0.02
34	SLU 19	-1	1195	4734	-39.91	0.36	0.01
34	SLU 20	-1	1217	4807	-40.59	0.6	0.02
34	SLU 21	-1	1213	4794	-40.54	0.38	0.02
34	SLU 22	0	1112	4427	-37.1	0.56	0.02
34	SLU 23	-2	1106	4406	-37	0.19	0.01
34	SLU 24	0	1138	4508	-38	0.58	0.02
34	SLU 25	-1	1134	4495	-37.95	0.36	0.01
34	SLU 26	-2	1124	4466	-37.63	0.2	0.01
34	SLU 27	0	1156	4568	-38.63	0.59	0.02
34	SLU 28	-1	1152	4555	-38.58	0.37	0.01
34	SLU 29	0	1148	4548	-38.36	0.59	0.02
34	SLU 30	-1	1144	4535	-38.3	0.36	0.01
34	SLU 31	-2	1250	4908	-41.85	0.22	0.01
34	SLU 32	-1	1282	5010	-42.86	0.6	0.02
34	SLU 33	-1	1279	4997	-42.8	0.38	0.02
34	SLU 34	-2	1268	4969	-42.48	0.23	0.01
34	SLU 35	-1	1301	5071	-43.49	0.61	0.02
34	SLU 36	-1	1297	5058	-43.43	0.39	0.02
34	SLU 37	-1	1293	5051	-43.21	0.61	0.02
34	SLU 38	-1	1289	5038	-43.15	0.39	0.02
34	SLU 39	-1	1319	5145	-44.03	0.6	0.02
34	SLU 40	-1	1315	5132	-43.97	0.37	0.02
34	SLU 41	-1	1337	5206	-44.66	0.61	0.02
34	SLU 42	-1	1333	5193	-44.6	0.39	0.02
34	SLU 43	0	1248	5100	-41.55	0.72	0.02
34	SLU 44	-1	1242	5078	-41.45	0.35	0.01
34	SLU 45	0	1274	5180	-42.45	0.73	0.02
34	SLU 46	-1	1270	5167	-42.39	0.51	0.02
34	SLU 47	-1	1260	5139	-42.08	0.36	0.01

Nodo	Cont.	Reazione a traslazione			Reazione a rotazione		
Ind.	N.br.	x	y	z	x	y	z
34	SLU 48	0	1292	5241	-43.08	0.74	0.02
34	SLU 49	-1	1288	5228	-43.02	0.52	0.02
34	SLU 50	0	1284	5221	-42.81	0.74	0.02
34	SLU 51	-1	1280	5208	-42.75	0.52	0.02
34	SLU 52	-2	1386	5581	-46.3	0.37	0.02
34	SLU 53	0	1418	5683	-47.3	0.76	0.02
34	SLU 54	-1	1415	5670	-47.25	0.53	0.02
34	SLU 55	-1	1404	5642	-46.93	0.38	0.02
34	SLU 56	0	1437	5744	-47.93	0.77	0.02
34	SLU 57	-1	1433	5731	-47.88	0.55	0.02
34	SLU 58	0	1429	5724	-47.66	0.76	0.02
34	SLU 59	-1	1425	5711	-47.6	0.54	0.02
34	SLU 60	-1	1455	5818	-48.48	0.75	0.02
34	SLU 61	-1	1451	5805	-48.42	0.53	0.02
34	SLU 62	-1	1473	5879	-49.11	0.76	0.02
34	SLU 63	-1	1469	5866	-49.05	0.54	0.02
34	SLU 64	0	1368	5499	-45.61	0.73	0.02
34	SLU 65	-1	1362	5477	-45.52	0.36	0.02
34	SLU 66	0	1394	5579	-46.52	0.74	0.02
34	SLU 67	-1	1390	5566	-46.46	0.52	0.02
34	SLU 68	-1	1380	5538	-46.15	0.37	0.02
34	SLU 69	0	1412	5640	-47.15	0.75	0.02
34	SLU 70	-1	1408	5627	-47.09	0.53	0.02
34	SLU 71	0	1405	5620	-46.88	0.75	0.02
34	SLU 72	-1	1401	5607	-46.82	0.53	0.02
34	SLU 73	-2	1507	5980	-50.37	0.38	0.02
34	SLU 74	-1	1539	6082	-51.37	0.77	0.02
34	SLU 75	-1	1535	6069	-51.31	0.54	0.02
34	SLU 76	-2	1525	6041	-51	0.39	0.02
34	SLU 77	-1	1557	6143	-52	0.78	0.02
34	SLU 78	-1	1553	6130	-51.94	0.55	0.02
34	SLU 79	-1	1549	6123	-51.73	0.77	0.02
34	SLU 80	-1	1545	6110	-51.67	0.55	0.02
34	SLU 81	-1	1575	6217	-52.55	0.76	0.02
34	SLU 82	-1	1571	6204	-52.49	0.54	0.02
34	SLU 83	-1	1593	6278	-53.18	0.77	0.02
34	SLU 84	-1	1589	6265	-53.12	0.55	0.02
34	SLE RA 1	0	1026	4142	-34.19	0.56	0.02
34	SLE RA 2	-1	1022	4128	-34.13	0.31	0.01
34	SLE RA 3	0	1043	4196	-34.8	0.57	0.02
34	SLE RA 4	-1	1041	4187	-34.76	0.42	0.01
34	SLE RA 5	-1	1034	4168	-34.55	0.32	0.01
34	SLE RA 6	0	1055	4236	-35.22	0.58	0.02
34	SLE RA 7	-1	1053	4228	-35.18	0.43	0.01
34	SLE RA 8	0	1050	4223	-35.03	0.57	0.02
34	SLE RA 9	-1	1048	4214	-35	0.42	0.01
34	SLE RA 10	-1	1118	4463	-37.36	0.33	0.01
34	SLE RA 11	0	1140	4531	-38.03	0.58	0.02
34	SLE RA 12	-1	1137	4522	-37.99	0.43	0.02
34	SLE RA 13	-1	1130	4503	-37.78	0.33	0.01
34	SLE RA 14	0	1152	4571	-38.45	0.59	0.02
34	SLE RA 15	-1	1149	4563	-38.41	0.44	0.02
34	SLE RA 16	0	1147	4558	-38.27	0.59	0.02
34	SLE RA 17	-1	1144	4549	-38.23	0.44	0.02
34	SLE RA 18	-1	1164	4621	-38.82	0.58	0.02
34	SLE RA 19	-1	1161	4612	-38.78	0.43	0.02
34	SLE RA 20	-1	1176	4661	-39.24	0.59	0.02
34	SLE RA 21	-1	1174	4653	-39.2	0.44	0.02
34	SLE FR 1	0	1026	4142	-34.19	0.56	0.02
34	SLE FR 2	0	1025	4139	-34.18	0.51	0.01
34	SLE FR 3	0	1031	4158	-34.36	0.56	0.02
34	SLE FR 4	-1	1067	4283	-35.57	0.51	0.02
34	SLE FR 5	0	1072	4302	-35.75	0.57	0.02
34	SLE FR 6	0	1095	4382	-36.5	0.57	0.02
34	SLE QP 1	0	1026	4142	-34.19	0.56	0.02
34	SLE QP 2	0	1068	4286	-35.58	0.56	0.02
34	SLD 1	-3	1604	5086	-58.35	-0.24	0.01
34	SLD 2	-3	1604	5086	-58.35	-0.24	0.01
34	SLD 3	-7	1079	4493	-34.87	-1.4	0
34	SLD 4	-7	1079	4493	-34.87	-1.4	0
34	SLD 5	4	2025	5427	-78.02	2.08	0.03
34	SLD 6	4	2025	5427	-78.02	2.08	0.03
34	SLD 7	-8	275	3447	0.24	-1.78	-0.01
34	SLD 8	-8	275	3447	0.24	-1.78	-0.01
34	SLD 9	7	1860	5124	-71.4	2.91	0.04
34	SLD 10	7	1860	5124	-71.4	2.91	0.04
34	SLD 11	-5	111	3145	6.86	-0.95	0
34	SLD 12	-5	111	3145	6.86	-0.95	0
34	SLD 13	6	1056	4079	-36.29	2.52	0.04
34	SLD 14	6	1056	4079	-36.29	2.52	0.04
34	SLD 15	2	532	3485	-12.81	1.36	0.03
34	SLD 16	2	532	3485	-12.81	1.36	0.03
34	SLV 1	-6	2303	6124	-88.11	-1.27	0
34	SLV 2	-6	2303	6124	-88.11	-1.27	0
34	SLV 3	-15	1080	4736	-33.4	-4.13	-0.03
34	SLV 4	-15	1080	4736	-33.4	-4.13	-0.03
34	SLV 5	11	3294	6943	-134.32	4.36	0.05
34	SLV 6	11	3294	6943	-134.32	4.36	0.05
34	SLV 7	-18	-784	2315	48.06	-5.19	-0.04
34	SLV 8	-18	-784	2315	48.06	-5.19	-0.04
34	SLV 9	17	2919	6257	-119.22	6.32	0.07

Nodo	Cont.	Reazione a traslazione			Reazione a rotazione		
Ind.	N.br.	x	y	z	x	y	z
34	SLV 10	17	2919	6257	-119.22	6.32	0.07
34	SLV 11	-12	-1158	1629	63.16	-3.23	-0.02
34	SLV 12	-12	-1158	1629	63.16	-3.23	-0.02
34	SLV 13	14	1055	3836	-37.77	5.26	0.06
34	SLV 14	14	1055	3836	-37.77	5.26	0.06
34	SLV 15	6	-168	2448	16.95	2.4	0.04
34	SLV 16	6	-168	2448	16.95	2.4	0.04
35	SLU 1	-3	811	3245	-43.78	-1.06	0.01
35	SLU 2	-2	806	3247	-43.59	-0.92	0.01
35	SLU 3	-3	831	3309	-44.81	-1.09	0.01
35	SLU 4	-3	828	3310	-44.7	-1	0.01
35	SLU 5	-2	820	3294	-44.33	-0.94	0.01
35	SLU 6	-3	845	3356	-45.55	-1.11	0.01
35	SLU 7	-3	842	3357	-45.44	-1.02	0.01
35	SLU 8	-3	839	3338	-45.27	-1.1	0.01
35	SLU 9	-3	836	3340	-45.15	-1.02	0.01
35	SLU 10	-3	932	3692	-49.92	-1.05	0.01
35	SLU 11	-3	957	3753	-51.14	-1.22	0.01
35	SLU 12	-3	954	3755	-51.02	-1.14	0.01
35	SLU 13	-3	946	3738	-50.66	-1.08	0.01
35	SLU 14	-3	971	3800	-51.88	-1.24	0.01
35	SLU 15	-3	968	3801	-51.76	-1.16	0.01
35	SLU 16	-3	965	3783	-51.59	-1.23	0.01
35	SLU 17	-3	962	3784	-51.48	-1.15	0.01
35	SLU 18	-3	991	3880	-52.82	-1.25	0.01
35	SLU 19	-3	988	3881	-52.71	-1.17	0.01
35	SLU 20	-3	1005	3926	-53.56	-1.27	0.01
35	SLU 21	-3	1002	3928	-53.45	-1.19	0.01
35	SLU 22	-3	909	3581	-48.69	-1.18	0.01
35	SLU 23	-3	904	3584	-48.49	-1.04	0.01
35	SLU 24	-3	928	3646	-49.71	-1.21	0.01
35	SLU 25	-3	926	3647	-49.6	-1.12	0.01
35	SLU 26	-3	918	3630	-49.23	-1.06	0.01
35	SLU 27	-3	943	3692	-50.46	-1.23	0.01
35	SLU 28	-3	940	3693	-50.34	-1.14	0.01
35	SLU 29	-3	937	3675	-50.17	-1.22	0.01
35	SLU 30	-3	934	3676	-50.05	-1.14	0.01
35	SLU 31	-3	1029	4028	-54.82	-1.17	0.01
35	SLU 32	-3	1054	4090	-56.04	-1.34	0.01
35	SLU 33	-3	1051	4091	-55.92	-1.26	0.01
35	SLU 34	-3	1044	4075	-55.56	-1.2	0.01
35	SLU 35	-3	1068	4137	-56.78	-1.36	0.01
35	SLU 36	-3	1065	4138	-56.67	-1.28	0.01
35	SLU 37	-3	1063	4119	-56.5	-1.35	0.01
35	SLU 38	-3	1060	4120	-56.38	-1.27	0.01
35	SLU 39	-3	1088	4216	-57.72	-1.37	0.01
35	SLU 40	-3	1085	4218	-57.61	-1.29	0.01
35	SLU 41	-4	1102	4263	-58.47	-1.39	0.01
35	SLU 42	-3	1099	4264	-58.35	-1.31	0.01
35	SLU 43	-3	1021	4103	-55.24	-1.33	0.01
35	SLU 44	-3	1016	4105	-55.04	-1.19	0.01
35	SLU 45	-4	1040	4167	-56.27	-1.36	0.01
35	SLU 46	-3	1038	4169	-56.15	-1.28	0.01
35	SLU 47	-3	1030	4152	-55.79	-1.22	0.01
35	SLU 48	-4	1055	4214	-57.01	-1.38	0.01
35	SLU 49	-3	1052	4215	-56.89	-1.3	0.01
35	SLU 50	-4	1049	4197	-56.72	-1.37	0.01
35	SLU 51	-3	1046	4198	-56.61	-1.29	0.01
35	SLU 52	-3	1141	4550	-61.37	-1.33	0.01
35	SLU 53	-4	1166	4612	-62.59	-1.5	0.01
35	SLU 54	-4	1163	4613	-62.48	-1.41	0.01
35	SLU 55	-4	1156	4596	-62.11	-1.35	0.01
35	SLU 56	-4	1180	4658	-63.33	-1.52	0.01
35	SLU 57	-4	1177	4660	-63.22	-1.44	0.01
35	SLU 58	-4	1175	4641	-63.05	-1.51	0.01
35	SLU 59	-4	1172	4642	-62.93	-1.43	0.01
35	SLU 60	-4	1200	4738	-64.28	-1.53	0.01
35	SLU 61	-4	1197	4739	-64.16	-1.44	0.01
35	SLU 62	-4	1214	4785	-65.02	-1.55	0.01
35	SLU 63	-4	1211	4786	-64.9	-1.46	0.01
35	SLU 64	-4	1118	4440	-60.14	-1.45	0.01
35	SLU 65	-3	1113	4442	-59.95	-1.32	0.01
35	SLU 66	-4	1138	4504	-61.17	-1.48	0.01
35	SLU 67	-4	1135	4505	-61.05	-1.4	0.01
35	SLU 68	-3	1127	4488	-60.69	-1.34	0.01
35	SLU 69	-4	1152	4550	-61.91	-1.5	0.01
35	SLU 70	-4	1149	4552	-61.79	-1.42	0.01
35	SLU 71	-4	1146	4533	-61.62	-1.49	0.01
35	SLU 72	-4	1143	4534	-61.51	-1.41	0.01
35	SLU 73	-4	1239	4886	-66.27	-1.45	0.01
35	SLU 74	-4	1264	4948	-67.5	-1.62	0.01
35	SLU 75	-4	1261	4949	-67.38	-1.53	0.01
35	SLU 76	-4	1253	4933	-67.02	-1.47	0.01
35	SLU 77	-4	1278	4995	-68.24	-1.64	0.01
35	SLU 78	-4	1275	4996	-68.12	-1.56	0.01
35	SLU 79	-4	1272	4977	-67.95	-1.63	0.01
35	SLU 80	-4	1269	4979	-67.84	-1.55	0.01
35	SLU 81	-4	1298	5074	-69.18	-1.65	0.01
35	SLU 82	-4	1295	5076	-69.06	-1.56	0.01
35	SLU 83	-4	1312	5121	-69.92	-1.67	0.01
35	SLU 84	-4	1309	5122	-69.8	-1.58	0.01

Nodo	Cont.	Reazione a traslazione			Reazione a rotazione		
Ind.	N.br.	x	y	z	x	y	z
35	SLE RA 1	-3	839	3341	-45.18	-1.09	0.01
35	SLE RA 2	-3	835	3343	-45.06	-1	0.01
35	SLE RA 3	-3	852	3384	-45.87	-1.11	0.01
35	SLE RA 4	-3	850	3385	-45.79	-1.06	0.01
35	SLE RA 5	-3	845	3374	-45.55	-1.01	0.01
35	SLE RA 6	-3	861	3415	-46.36	-1.12	0.01
35	SLE RA 7	-3	859	3416	-46.29	-1.07	0.01
35	SLE RA 8	-3	857	3403	-46.17	-1.12	0.01
35	SLE RA 9	-3	856	3404	-46.1	-1.06	0.01
35	SLE RA 10	-3	919	3639	-49.27	-1.09	0.01
35	SLE RA 11	-3	936	3680	-50.09	-1.2	0.01
35	SLE RA 12	-3	934	3681	-50.01	-1.15	0.01
35	SLE RA 13	-3	929	3670	-49.77	-1.1	0.01
35	SLE RA 14	-3	945	3711	-50.58	-1.22	0.01
35	SLE RA 15	-3	943	3712	-50.51	-1.16	0.01
35	SLE RA 16	-3	941	3700	-50.39	-1.21	0.01
35	SLE RA 17	-3	939	3700	-50.31	-1.15	0.01
35	SLE RA 18	-3	959	3764	-51.21	-1.22	0.01
35	SLE RA 19	-3	957	3765	-51.13	-1.16	0.01
35	SLE RA 20	-3	968	3795	-51.7	-1.23	0.01
35	SLE RA 21	-3	966	3796	-51.63	-1.18	0.01
35	SLE FR 1	-3	839	3341	-45.18	-1.09	0.01
35	SLE FR 2	-3	838	3341	-45.16	-1.07	0.01
35	SLE FR 3	-3	842	3354	-45.38	-1.1	0.01
35	SLE FR 4	-3	874	3468	-46.97	-1.11	0.01
35	SLE FR 5	-3	878	3481	-47.19	-1.14	0.01
35	SLE FR 6	-3	899	3553	-48.2	-1.16	0.01
35	SLE QP 1	-3	839	3341	-45.18	-1.09	0.01
35	SLE QP 2	-3	875	3468	-46.99	-1.13	0.01
35	SLD 1	-6	881	3338	-47.85	-1.97	0.01
35	SLD 2	-6	881	3338	-47.85	-1.97	0.01
35	SLD 3	-4	454	2881	-26.49	-1.56	0.01
35	SLD 4	-4	454	2881	-26.49	-1.56	0.01
35	SLD 5	-6	1524	4121	-79.66	-2.01	0.01
35	SLD 6	-6	1524	4121	-79.66	-2.01	0.01
35	SLD 7	-1	101	2600	-8.43	-0.63	0
35	SLD 8	-1	101	2600	-8.43	-0.63	0
35	SLD 9	-5	1648	4336	-85.55	-1.63	0.01
35	SLD 10	-5	1648	4336	-85.55	-1.63	0.01
35	SLD 11	0	226	2815	-14.32	-0.25	0
35	SLD 12	0	226	2815	-14.32	-0.25	0
35	SLD 13	-2	1295	4055	-67.5	-0.7	0
35	SLD 14	-2	1295	4055	-67.5	-0.7	0
35	SLD 15	0	868	3599	-46.13	-0.29	0
35	SLD 16	0	868	3599	-46.13	-0.29	0
35	SLV 1	-10	898	3184	-49.38	-3.11	0.02
35	SLV 2	-10	898	3184	-49.38	-3.11	0.02
35	SLV 3	-6	-97	2116	0.46	-2.13	0.01
35	SLV 4	-6	-97	2116	0.46	-2.13	0.01
35	SLV 5	-10	2391	5002	-123.3	-3.2	0.03
35	SLV 6	-10	2391	5002	-123.3	-3.2	0.03
35	SLV 7	2	-926	1444	42.84	0.05	-0.01
35	SLV 8	2	-926	1444	42.84	0.05	-0.01
35	SLV 9	-8	2676	5493	-136.82	-2.31	0.02
35	SLV 10	-8	2676	5493	-136.82	-2.31	0.02
35	SLV 11	5	-642	1935	29.32	0.94	-0.02
35	SLV 12	5	-642	1935	29.32	0.94	-0.02
35	SLV 13	0	1846	4820	-94.44	-0.13	0
35	SLV 14	0	1846	4820	-94.44	-0.13	0
35	SLV 15	4	851	3753	-44.6	0.85	-0.01
35	SLV 16	4	851	3753	-44.6	0.85	-0.01
36	SLU 1	-3	-32	723	-11.15	-1.6	-0.01
36	SLU 2	-1	-41	802	-10.99	0.55	0
36	SLU 3	-3	-32	724	-11.38	-1.64	-0.01
36	SLU 4	-2	-37	771	-11.29	-0.35	0
36	SLU 5	-1	-41	803	-11.21	0.52	0
36	SLU 6	-3	-32	725	-11.6	-1.67	-0.01
36	SLU 7	-2	-38	772	-11.51	-0.38	0
36	SLU 8	-3	-33	726	-11.59	-1.65	-0.01
36	SLU 9	-2	-38	773	-11.49	-0.36	0
36	SLU 10	-1	-44	818	-12.25	0.36	0
36	SLU 11	-3	-36	740	-12.65	-1.83	-0.01
36	SLU 12	-2	-41	787	-12.55	-0.54	0
36	SLU 13	-1	-44	819	-12.47	0.34	0
36	SLU 14	-3	-36	741	-12.87	-1.85	-0.01
36	SLU 15	-2	-41	788	-12.77	-0.56	0
36	SLU 16	-3	-36	741	-12.85	-1.83	-0.01
36	SLU 17	-2	-41	789	-12.76	-0.54	0
36	SLU 18	-3	-37	746	-12.95	-1.86	-0.01
36	SLU 19	-2	-42	793	-12.86	-0.57	0
36	SLU 20	-3	-37	747	-13.17	-1.89	-0.01
36	SLU 21	-2	-42	794	-13.08	-0.6	0
36	SLU 22	-3	-35	735	-12.21	-1.75	-0.01
36	SLU 23	-1	-43	814	-12.05	0.4	0
36	SLU 24	-3	-35	736	-12.44	-1.79	-0.01
36	SLU 25	-2	-40	783	-12.35	-0.5	0
36	SLU 26	-1	-43	815	-12.27	0.38	0
36	SLU 27	-3	-35	737	-12.66	-1.81	-0.01
36	SLU 28	-2	-40	784	-12.57	-0.52	0
36	SLU 29	-3	-35	737	-12.65	-1.79	-0.01
36	SLU 30	-2	-40	785	-12.55	-0.5	0

Nodo	Cont.	Reazione a traslazione			Reazione a rotazione		
Ind.	N.br.	x	y	z	x	y	z
36	SLU 31	-1	-46	829	-13.31	0.22	0
36	SLU 32	-4	-38	751	-13.7	-1.97	-0.01
36	SLU 33	-2	-43	799	-13.61	-0.68	0
36	SLU 34	-1	-46	831	-13.53	0.2	0
36	SLU 35	-4	-38	752	-13.92	-1.99	-0.01
36	SLU 36	-2	-43	800	-13.83	-0.7	0
36	SLU 37	-4	-38	753	-13.91	-1.98	-0.01
36	SLU 38	-2	-43	800	-13.81	-0.69	0
36	SLU 39	-4	-39	757	-14.01	-2.01	-0.01
36	SLU 40	-2	-44	805	-13.91	-0.72	0
36	SLU 41	-4	-39	758	-14.23	-2.03	-0.01
36	SLU 42	-2	-44	806	-14.13	-0.74	0
36	SLU 43	-4	-41	936	-14.13	-2.03	-0.01
36	SLU 44	-2	-50	1015	-13.97	0.12	0
36	SLU 45	-4	-41	937	-14.36	-2.08	-0.01
36	SLU 46	-2	-46	984	-14.27	-0.78	0
36	SLU 47	-2	-50	1016	-14.19	0.09	0
36	SLU 48	-4	-41	938	-14.59	-2.1	-0.01
36	SLU 49	-2	-46	985	-14.49	-0.81	0
36	SLU 50	-4	-42	939	-14.57	-2.08	-0.01
36	SLU 51	-2	-47	986	-14.48	-0.79	0
36	SLU 52	-2	-53	1031	-15.23	-0.07	0
36	SLU 53	-4	-44	953	-15.63	-2.26	-0.01
36	SLU 54	-3	-49	1000	-15.53	-0.97	0
36	SLU 55	-2	-53	1032	-15.45	-0.09	0
36	SLU 56	-4	-45	954	-15.85	-2.28	-0.01
36	SLU 57	-3	-50	1001	-15.75	-0.99	0
36	SLU 58	-4	-45	954	-15.83	-2.26	-0.01
36	SLU 59	-3	-50	1002	-15.74	-0.97	0
36	SLU 60	-4	-46	959	-15.93	-2.3	-0.01
36	SLU 61	-3	-51	1006	-15.84	-1.01	0
36	SLU 62	-4	-46	960	-16.15	-2.32	-0.01
36	SLU 63	-3	-51	1007	-16.06	-1.03	0
36	SLU 64	-4	-44	948	-15.19	-2.18	-0.01
36	SLU 65	-2	-52	1027	-15.03	-0.03	0
36	SLU 66	-4	-44	949	-15.42	-2.22	-0.01
36	SLU 67	-3	-49	996	-15.33	-0.93	0
36	SLU 68	-2	-52	1028	-15.25	-0.05	0
36	SLU 69	-4	-44	950	-15.64	-2.24	-0.01
36	SLU 70	-3	-49	997	-15.55	-0.95	0
36	SLU 71	-4	-44	950	-15.63	-2.23	-0.01
36	SLU 72	-3	-49	998	-15.53	-0.94	0
36	SLU 73	-2	-55	1042	-16.29	-0.21	0
36	SLU 74	-4	-47	964	-16.68	-2.4	-0.01
36	SLU 75	-3	-52	1012	-16.59	-1.11	-0.01
36	SLU 76	-2	-55	1044	-16.51	-0.23	0
36	SLU 77	-4	-47	965	-16.91	-2.43	-0.01
36	SLU 78	-3	-52	1013	-16.81	-1.14	-0.01
36	SLU 79	-4	-47	966	-16.89	-2.41	-0.01
36	SLU 80	-3	-52	1013	-16.79	-1.12	-0.01
36	SLU 81	-4	-48	970	-16.99	-2.44	-0.01
36	SLU 82	-3	-53	1018	-16.89	-1.15	-0.01
36	SLU 83	-4	-48	972	-17.21	-2.46	-0.01
36	SLU 84	-3	-53	1019	-17.11	-1.17	-0.01
36	SLE RA 1	-3	-33	727	-11.45	-1.64	-0.01
36	SLE RA 2	-2	-39	779	-11.34	-0.21	0
36	SLE RA 3	-3	-33	727	-11.61	-1.67	-0.01
36	SLE RA 4	-2	-36	759	-11.54	-0.81	0
36	SLE RA 5	-2	-39	780	-11.49	-0.23	0
36	SLE RA 6	-3	-33	728	-11.75	-1.69	-0.01
36	SLE RA 7	-2	-36	759	-11.69	-0.83	0
36	SLE RA 8	-3	-33	728	-11.74	-1.68	-0.01
36	SLE RA 9	-2	-37	760	-11.68	-0.82	0
36	SLE RA 10	-2	-41	790	-12.19	-0.33	0
36	SLE RA 11	-3	-35	738	-12.45	-1.79	-0.01
36	SLE RA 12	-2	-39	769	-12.38	-0.93	0
36	SLE RA 13	-2	-41	790	-12.33	-0.35	0
36	SLE RA 14	-3	-35	738	-12.6	-1.81	-0.01
36	SLE RA 15	-2	-39	770	-12.53	-0.95	0
36	SLE RA 16	-3	-35	739	-12.59	-1.8	-0.01
36	SLE RA 17	-2	-39	770	-12.52	-0.94	0
36	SLE RA 18	-3	-36	742	-12.65	-1.82	-0.01
36	SLE RA 19	-2	-39	773	-12.59	-0.96	0
36	SLE RA 20	-3	-36	742	-12.8	-1.83	-0.01
36	SLE RA 21	-2	-40	774	-12.74	-0.97	0
36	SLE FR 1	-3	-33	727	-11.45	-1.64	-0.01
36	SLE FR 2	-3	-34	737	-11.43	-1.36	0
36	SLE FR 3	-3	-33	727	-11.51	-1.65	-0.01
36	SLE FR 4	-3	-35	742	-11.79	-1.41	-0.01
36	SLE FR 5	-3	-34	731	-11.87	-1.7	-0.01
36	SLE FR 6	-3	-35	734	-12.05	-1.73	-0.01
36	SLE QP 1	-3	-33	727	-11.45	-1.64	-0.01
36	SLE QP 2	-3	-34	731	-11.81	-1.7	-0.01
36	SLD 1	2	32	405	-12.05	3.32	0.01
36	SLD 2	2	32	405	-12.05	3.32	0.01
36	SLD 3	8	-43	762	-7.87	10.46	0.02
36	SLD 4	8	-43	762	-7.87	10.46	0.02
36	SLD 5	-11	100	92	-18.23	-11.01	-0.02
36	SLD 6	-11	100	92	-18.23	-11.01	-0.02
36	SLD 7	10	-151	1281	-4.28	12.77	0.02
36	SLD 8	10	-151	1281	-4.28	12.77	0.02

Nodo	Cont.	Reazione a traslazione			Reazione a rotazione		
Ind.	N.br.	x	y	z	x	y	z
36	SLD 9	-16	83	181	-19.34	-16.16	-0.04
36	SLD 10	-16	83	181	-19.34	-16.16	-0.04
36	SLD 11	5	-168	1370	-5.39	7.61	0.01
36	SLD 12	5	-168	1370	-5.39	7.61	0.01
36	SLD 13	-14	-25	701	-15.75	-13.85	-0.03
36	SLD 14	-14	-25	701	-15.75	-13.85	-0.03
36	SLD 15	-8	-100	1057	-11.57	-6.72	-0.02
36	SLD 16	-8	-100	1057	-11.57	-6.72	-0.02
36	SLV 1	9	124	-73	-12.42	9.9	0.02
36	SLV 2	9	124	-73	-12.42	9.9	0.02
36	SLV 3	24	-57	821	-2.45	27.05	0.06
36	SLV 4	24	-57	821	-2.45	27.05	0.06
36	SLV 5	-22	288	-866	-27.12	-24.24	-0.05
36	SLV 6	-22	288	-866	-27.12	-24.24	-0.05
36	SLV 7	27	-316	2114	6.12	32.95	0.07
36	SLV 8	27	-316	2114	6.12	32.95	0.07
36	SLV 9	-33	248	-652	-29.74	-36.34	-0.08
36	SLV 10	-33	248	-652	-29.74	-36.34	-0.08
36	SLV 11	16	-356	2328	3.5	20.84	0.04
36	SLV 12	16	-356	2328	3.5	20.84	0.04
36	SLV 13	-30	-11	641	-21.17	-30.45	-0.07
36	SLV 14	-30	-11	641	-21.17	-30.45	-0.07
36	SLV 15	-15	-192	1535	-11.2	-13.29	-0.04
36	SLV 16	-15	-192	1535	-11.2	-13.29	-0.04
37	SLU 1	-57	-27	4802	5.88	-13.67	3.82
37	SLU 2	-56	-73	4889	7.83	-13.92	3.8
37	SLU 3	-58	-24	4881	5.8	-13.91	3.89
37	SLU 4	-57	-52	4933	6.97	-14.06	3.87
37	SLU 5	-57	-73	4942	7.81	-14.05	3.83
37	SLU 6	-58	-24	4934	5.78	-14.04	3.92
37	SLU 7	-58	-52	4986	6.95	-14.19	3.91
37	SLU 8	-58	-27	4907	5.83	-13.93	3.89
37	SLU 9	-58	-55	4960	7.01	-14.08	3.88
37	SLU 10	-65	-62	5535	8.65	-15.88	4.4
37	SLU 11	-66	-13	5528	6.61	-15.87	4.5
37	SLU 12	-66	-41	5580	7.78	-16.02	4.48
37	SLU 13	-65	-62	5588	8.62	-16.01	4.44
37	SLU 14	-67	-14	5580	6.59	-16.01	4.53
37	SLU 15	-66	-41	5633	7.76	-16.16	4.52
37	SLU 16	-66	-17	5554	6.65	-15.9	4.5
37	SLU 17	-66	-44	5606	7.82	-16.05	4.48
37	SLU 18	-69	-11	5725	7.04	-16.48	4.69
37	SLU 19	-68	-39	5778	8.21	-16.62	4.67
37	SLU 20	-69	-12	5778	7.02	-16.61	4.72
37	SLU 21	-69	-39	5830	8.19	-16.76	4.71
37	SLU 22	-64	-15	5348	6.38	-15.4	4.34
37	SLU 23	-64	-60	5435	8.33	-15.64	4.32
37	SLU 24	-65	-12	5428	6.3	-15.64	4.41
37	SLU 25	-65	-40	5480	7.47	-15.79	4.4
37	SLU 26	-64	-61	5488	8.31	-15.78	4.36
37	SLU 27	-66	-12	5480	6.27	-15.77	4.45
37	SLU 28	-65	-40	5533	7.44	-15.92	4.43
37	SLU 29	-65	-15	5454	6.33	-15.66	4.41
37	SLU 30	-65	-43	5506	7.5	-15.81	4.4
37	SLU 31	-72	-50	6082	9.14	-17.61	4.93
37	SLU 32	-74	-1	6074	7.11	-17.6	5.02
37	SLU 33	-73	-29	6126	8.28	-17.75	5.01
37	SLU 34	-72	-50	6135	9.12	-17.74	4.96
37	SLU 35	-74	-2	6127	7.09	-17.73	5.06
37	SLU 36	-74	-29	6179	8.26	-17.88	5.04
37	SLU 37	-74	-4	6100	7.15	-17.63	5.02
37	SLU 38	-73	-32	6153	8.32	-17.77	5.01
37	SLU 39	-76	1	6272	7.54	-18.2	5.21
37	SLU 40	-76	-27	6324	8.71	-18.35	5.2
37	SLU 41	-77	0	6325	7.52	-18.34	5.25
37	SLU 42	-76	-27	6377	8.69	-18.48	5.23
37	SLU 43	-71	-39	6055	7.48	-17.17	4.78
37	SLU 44	-71	-85	6142	9.43	-17.42	4.76
37	SLU 45	-72	-36	6134	7.39	-17.42	4.85
37	SLU 46	-72	-64	6186	8.56	-17.56	4.84
37	SLU 47	-71	-85	6195	9.4	-17.56	4.8
37	SLU 48	-73	-37	6187	7.37	-17.55	4.89
37	SLU 49	-73	-64	6239	8.54	-17.7	4.88
37	SLU 50	-72	-39	6160	7.43	-17.44	4.86
37	SLU 51	-72	-67	6213	8.6	-17.59	4.84
37	SLU 52	-79	-74	6788	10.24	-19.39	5.37
37	SLU 53	-81	-26	6781	8.21	-19.38	5.46
37	SLU 54	-80	-53	6833	9.38	-19.53	5.45
37	SLU 55	-80	-74	6841	10.22	-19.52	5.4
37	SLU 56	-81	-26	6833	8.18	-19.51	5.5
37	SLU 57	-81	-53	6886	9.35	-19.66	5.48
37	SLU 58	-81	-29	6807	8.24	-19.41	5.46
37	SLU 59	-80	-56	6859	9.41	-19.55	5.45
37	SLU 60	-83	-24	6978	8.64	-19.98	5.65
37	SLU 61	-83	-51	7031	9.81	-20.13	5.64
37	SLU 62	-84	-24	7031	8.61	-20.12	5.69
37	SLU 63	-83	-51	7083	9.78	-20.26	5.67
37	SLU 64	-79	-27	6601	7.97	-18.9	5.31
37	SLU 65	-78	-73	6688	9.92	-19.15	5.29
37	SLU 66	-80	-24	6681	7.89	-19.14	5.38
37	SLU 67	-79	-52	6733	9.06	-19.29	5.36

Nodo	Cont.	Reazione a traslazione			Reazione a rotazione		
Ind.	N.br.	x	y	z	x	y	z
37	SLU 68	-79	-73	6741	9.9	-19.28	5.32
37	SLU 69	-80	-25	6733	7.87	-19.28	5.41
37	SLU 70	-80	-52	6786	9.04	-19.43	5.4
37	SLU 71	-80	-27	6707	7.93	-19.17	5.38
37	SLU 72	-79	-55	6759	9.1	-19.32	5.37
37	SLU 73	-86	-62	7335	10.74	-21.12	5.89
37	SLU 74	-88	-14	7327	8.7	-21.11	5.99
37	SLU 75	-88	-41	7380	9.87	-21.26	5.97
37	SLU 76	-87	-62	7388	10.71	-21.25	5.93
37	SLU 77	-89	-14	7380	8.68	-21.24	6.02
37	SLU 78	-88	-41	7432	9.85	-21.39	6.01
37	SLU 79	-88	-17	7353	8.74	-21.13	5.99
37	SLU 80	-88	-44	7406	9.91	-21.28	5.97
37	SLU 81	-91	-11	7525	9.14	-21.71	6.18
37	SLU 82	-90	-39	7577	10.31	-21.86	6.16
37	SLU 83	-91	-12	7578	9.11	-21.84	6.21
37	SLU 84	-91	-39	7630	10.28	-21.99	6.2
37	SLE RA 1	-59	-23	4958	6.03	-14.16	3.97
37	SLE RA 2	-59	-54	5016	7.33	-14.33	3.95
37	SLE RA 3	-60	-22	5011	5.97	-14.32	4.01
37	SLE RA 4	-59	-40	5046	6.75	-14.42	4.01
37	SLE RA 5	-59	-54	5051	7.31	-14.41	3.98
37	SLE RA 6	-60	-22	5046	5.95	-14.41	4.04
37	SLE RA 7	-60	-40	5081	6.73	-14.51	4.03
37	SLE RA 8	-60	-24	5028	5.99	-14.34	4.02
37	SLE RA 9	-59	-42	5063	6.77	-14.44	4.01
37	SLE RA 10	-64	-47	5447	7.87	-15.64	4.36
37	SLE RA 11	-65	-14	5442	6.51	-15.63	4.42
37	SLE RA 12	-65	-33	5477	7.29	-15.73	4.41
37	SLE RA 13	-64	-47	5482	7.85	-15.73	4.38
37	SLE RA 14	-66	-15	5477	6.5	-15.72	4.44
37	SLE RA 15	-65	-33	5512	7.28	-15.82	4.43
37	SLE RA 16	-65	-16	5459	6.53	-15.65	4.42
37	SLE RA 17	-65	-35	5494	7.31	-15.75	4.41
37	SLE RA 18	-67	-13	5574	6.8	-16.03	4.55
37	SLE RA 19	-67	-31	5608	7.58	-16.13	4.54
37	SLE RA 20	-67	-13	5609	6.78	-16.12	4.57
37	SLE RA 21	-67	-32	5644	7.56	-16.22	4.56
37	SLE FR 1	-59	-23	4958	6.03	-14.16	3.97
37	SLE FR 2	-59	-29	4969	6.29	-14.19	3.96
37	SLE FR 3	-59	-23	4972	6.02	-14.2	3.98
37	SLE FR 4	-61	-26	5154	6.52	-14.76	4.14
37	SLE FR 5	-61	-20	5157	6.25	-14.76	4.15
37	SLE FR 6	-63	-18	5266	6.41	-15.1	4.26
37	SLE QP 1	-59	-23	4958	6.03	-14.16	3.97
37	SLE QP 2	-61	-20	5143	6.26	-14.72	4.14
37	SLD 1	-51	-28	4773	-4.21	-11.38	3.26
37	SLD 2	-51	-28	4773	-4.21	-11.38	3.26
37	SLD 3	-37	-337	4363	10.06	-9.58	2.16
37	SLD 4	-37	-337	4363	10.06	-9.58	2.16
37	SLD 5	-79	447	5654	-18.52	-16.46	5.54
37	SLD 6	-79	447	5654	-18.52	-16.46	5.54
37	SLD 7	-33	-585	4286	29.04	-10.44	1.89
37	SLD 8	-33	-585	4286	29.04	-10.44	1.89
37	SLD 9	-89	544	5999	-16.53	-19.01	6.4
37	SLD 10	-89	544	5999	-16.53	-19.01	6.4
37	SLD 11	-44	-487	4631	31.04	-12.98	2.74
37	SLD 12	-44	-487	4631	31.04	-12.98	2.74
37	SLD 13	-86	297	5922	2.45	-19.87	6.12
37	SLD 14	-86	297	5922	2.45	-19.87	6.12
37	SLD 15	-72	-12	5512	16.72	-18.06	5.03
37	SLD 16	-72	-12	5512	16.72	-18.06	5.03
37	SLV 1	-37	-31	4320	-18.49	-7.08	2.16
37	SLV 2	-37	-31	4320	-18.49	-7.08	2.16
37	SLV 3	-5	-767	3353	15.18	-2.87	-0.43
37	SLV 4	-5	-767	3353	15.18	-2.87	-0.43
37	SLV 5	-102	1093	6363	-52.24	-18.82	7.47
37	SLV 6	-102	1093	6363	-52.24	-18.82	7.47
37	SLV 7	4	-1361	3138	60	-4.78	-1.15
37	SLV 8	4	-1361	3138	60	-4.78	-1.15
37	SLV 9	-126	1320	7147	-47.49	-24.67	9.43
37	SLV 10	-126	1320	7147	-47.49	-24.67	9.43
37	SLV 11	-20	-1133	3922	64.75	-10.63	0.82
37	SLV 12	-20	-1133	3922	64.75	-10.63	0.82
37	SLV 13	-117	726	6932	-2.67	-26.57	8.71
37	SLV 14	-117	726	6932	-2.67	-26.57	8.71
37	SLV 15	-86	-10	5965	31.01	-22.36	6.13
37	SLV 16	-86	-10	5965	31.01	-22.36	6.13
38	SLU 1	4	1040	4757	-49.37	1.32	-0.01
38	SLU 2	4	1028	4711	-48.88	1.05	-0.02
38	SLU 3	4	1066	4857	-50.61	1.35	-0.01
38	SLU 4	4	1060	4829	-50.31	1.19	-0.01
38	SLU 5	4	1047	4785	-49.76	1.07	-0.02
38	SLU 6	5	1085	4930	-51.49	1.37	-0.01
38	SLU 7	4	1079	4903	-51.19	1.21	-0.01
38	SLU 8	5	1077	4904	-51.14	1.36	-0.01
38	SLU 9	4	1071	4876	-50.84	1.2	-0.01
38	SLU 10	4	1185	5346	-56.16	1.19	-0.02
38	SLU 11	5	1224	5492	-57.89	1.5	-0.01
38	SLU 12	4	1217	5464	-57.6	1.33	-0.02
38	SLU 13	4	1204	5419	-57.05	1.21	-0.02

Nodo	Cont.	Reazione a traslazione			Reazione a rotazione		
Ind.	N.br.	x	y	z	x	y	z
38	SLU 14	5	1242	5565	-58.78	1.52	-0.01
38	SLU 15	4	1236	5538	-58.48	1.35	-0.02
38	SLU 16	5	1234	5539	-58.42	1.51	-0.01
38	SLU 17	4	1228	5511	-58.12	1.35	-0.02
38	SLU 18	5	1264	5664	-59.78	1.53	-0.01
38	SLU 19	4	1257	5636	-59.48	1.36	-0.02
38	SLU 20	5	1283	5737	-60.66	1.55	-0.01
38	SLU 21	4	1276	5710	-60.37	1.38	-0.02
38	SLU 22	4	1170	5269	-55.36	1.43	-0.01
38	SLU 23	4	1158	5223	-54.87	1.15	-0.02
38	SLU 24	5	1197	5369	-56.6	1.46	-0.01
38	SLU 25	4	1190	5341	-56.3	1.3	-0.02
38	SLU 26	4	1177	5297	-55.75	1.18	-0.02
38	SLU 27	5	1215	5442	-57.48	1.48	-0.01
38	SLU 28	4	1209	5415	-57.18	1.32	-0.02
38	SLU 29	5	1207	5416	-57.13	1.47	-0.01
38	SLU 30	4	1201	5388	-56.83	1.31	-0.02
38	SLU 31	4	1315	5858	-62.15	1.3	-0.02
38	SLU 32	5	1354	6004	-63.88	1.6	-0.01
38	SLU 33	4	1347	5976	-63.59	1.44	-0.02
38	SLU 34	4	1334	5931	-63.03	1.32	-0.02
38	SLU 35	5	1373	6077	-64.76	1.63	-0.01
38	SLU 36	4	1366	6050	-64.47	1.46	-0.02
38	SLU 37	5	1365	6051	-64.41	1.62	-0.01
38	SLU 38	4	1358	6023	-64.11	1.45	-0.02
38	SLU 39	5	1394	6176	-65.77	1.63	-0.02
38	SLU 40	4	1387	6148	-65.47	1.47	-0.02
38	SLU 41	5	1413	6249	-66.65	1.66	-0.02
38	SLU 42	4	1406	6222	-66.35	1.49	-0.02
38	SLU 43	6	1307	6009	-62.13	1.68	-0.01
38	SLU 44	5	1296	5963	-61.64	1.41	-0.02
38	SLU 45	6	1334	6109	-63.37	1.71	-0.01
38	SLU 46	5	1327	6081	-63.07	1.55	-0.02
38	SLU 47	5	1314	6036	-62.52	1.43	-0.02
38	SLU 48	6	1353	6182	-64.25	1.73	-0.01
38	SLU 49	5	1346	6155	-63.95	1.57	-0.02
38	SLU 50	6	1345	6156	-63.9	1.72	-0.01
38	SLU 51	5	1338	6128	-63.6	1.56	-0.02
38	SLU 52	5	1453	6598	-68.92	1.55	-0.02
38	SLU 53	6	1491	6743	-70.65	1.85	-0.02
38	SLU 54	6	1484	6716	-70.36	1.69	-0.02
38	SLU 55	5	1472	6671	-69.8	1.57	-0.02
38	SLU 56	6	1510	6817	-71.54	1.88	-0.02
38	SLU 57	6	1503	6789	-71.24	1.71	-0.02
38	SLU 58	6	1502	6790	-71.18	1.87	-0.02
38	SLU 59	6	1495	6763	-70.88	1.7	-0.02
38	SLU 60	6	1531	6916	-72.54	1.88	-0.02
38	SLU 61	6	1525	6888	-72.24	1.72	-0.02
38	SLU 62	6	1550	6989	-73.42	1.91	-0.02
38	SLU 63	6	1543	6961	-73.12	1.74	-0.02
38	SLU 64	6	1437	6521	-68.12	1.79	-0.01
38	SLU 65	5	1426	6475	-67.63	1.51	-0.02
38	SLU 66	6	1464	6621	-69.36	1.82	-0.01
38	SLU 67	5	1457	6593	-69.06	1.65	-0.02
38	SLU 68	5	1444	6548	-68.51	1.54	-0.02
38	SLU 69	6	1483	6694	-70.24	1.84	-0.02
38	SLU 70	6	1476	6666	-69.94	1.68	-0.02
38	SLU 71	6	1475	6668	-69.88	1.83	-0.02
38	SLU 72	6	1468	6640	-69.59	1.67	-0.02
38	SLU 73	5	1583	7110	-74.91	1.66	-0.02
38	SLU 74	6	1621	7255	-76.64	1.96	-0.02
38	SLU 75	6	1614	7228	-76.35	1.8	-0.02
38	SLU 76	5	1602	7183	-75.79	1.68	-0.02
38	SLU 77	6	1640	7329	-77.52	1.98	-0.02
38	SLU 78	6	1633	7301	-77.23	1.82	-0.02
38	SLU 79	6	1632	7302	-77.17	1.98	-0.02
38	SLU 80	6	1625	7275	-76.87	1.81	-0.02
38	SLU 81	6	1661	7428	-78.53	1.99	-0.02
38	SLU 82	6	1655	7400	-78.23	1.83	-0.02
38	SLU 83	6	1680	7501	-79.41	2.01	-0.02
38	SLU 84	6	1673	7473	-79.11	1.85	-0.02
38	SLE RA 1	4	1077	4903	-51.09	1.35	-0.01
38	SLE RA 2	4	1069	4873	-50.76	1.17	-0.01
38	SLE RA 3	4	1095	4970	-51.91	1.37	-0.01
38	SLE RA 4	4	1090	4952	-51.71	1.26	-0.01
38	SLE RA 5	4	1082	4922	-51.34	1.18	-0.01
38	SLE RA 6	5	1107	5019	-52.5	1.39	-0.01
38	SLE RA 7	4	1103	5001	-52.3	1.28	-0.01
38	SLE RA 8	5	1102	5001	-52.26	1.38	-0.01
38	SLE RA 9	4	1097	4983	-52.06	1.27	-0.01
38	SLE RA 10	4	1174	5296	-55.61	1.26	-0.02
38	SLE RA 11	5	1199	5393	-56.77	1.47	-0.01
38	SLE RA 12	4	1195	5375	-56.57	1.36	-0.01
38	SLE RA 13	4	1187	5345	-56.2	1.28	-0.02
38	SLE RA 14	5	1212	5442	-57.35	1.48	-0.01
38	SLE RA 15	4	1207	5424	-57.16	1.37	-0.01
38	SLE RA 16	5	1207	5425	-57.12	1.48	-0.01
38	SLE RA 17	4	1202	5406	-56.92	1.37	-0.01
38	SLE RA 18	5	1226	5508	-58.02	1.49	-0.01
38	SLE RA 19	4	1222	5490	-57.83	1.38	-0.02
38	SLE RA 20	5	1239	5557	-58.61	1.5	-0.01

Nodo	Cont.	Reazione a traslazione			Reazione a rotazione		
Ind.	N.br.	x	y	z	x	y	z
38	SLE RA 21	4	1234	5539	-58.41	1.39	-0.02
38	SLE FR 1	4	1077	4903	-51.09	1.35	-0.01
38	SLE FR 2	4	1075	4897	-51.02	1.31	-0.01
38	SLE FR 3	4	1082	4923	-51.32	1.36	-0.01
38	SLE FR 4	4	1120	5079	-53.1	1.35	-0.01
38	SLE FR 5	4	1127	5104	-53.4	1.4	-0.01
38	SLE FR 6	4	1152	5206	-54.55	1.42	-0.01
38	SLE QP 1	4	1077	4903	-51.09	1.35	-0.01
38	SLE QP 2	4	1122	5085	-53.17	1.39	-0.01
38	SLD 1	2	1671	5998	-79.33	0.74	-0.03
38	SLD 2	2	1671	5998	-79.33	0.74	-0.03
38	SLD 3	-3	1141	5439	-54.14	-0.22	-0.05
38	SLD 4	-3	1141	5439	-54.14	-0.22	-0.05
38	SLD 5	10	2090	6207	-99.23	2.64	0.02
38	SLD 6	10	2090	6207	-99.23	2.64	0.02
38	SLD 7	-4	324	4343	-15.24	-0.54	-0.05
38	SLD 8	-4	324	4343	-15.24	-0.54	-0.05
38	SLD 9	13	1919	5827	-91.09	3.32	0.03
38	SLD 10	13	1919	5827	-91.09	3.32	0.03
38	SLD 11	-1	154	3963	-7.1	0.14	-0.04
38	SLD 12	-1	154	3963	-7.1	0.14	-0.04
38	SLD 13	11	1102	4730	-52.2	3	0.02
38	SLD 14	11	1102	4730	-52.2	3	0.02
38	SLD 15	7	572	4171	-27	2.05	0
38	SLD 16	7	572	4171	-27	2.05	0
38	SLV 1	-2	2387	7177	-113.49	-0.1	-0.05
38	SLV 2	-2	2387	7177	-113.49	-0.1	-0.05
38	SLV 3	-13	1153	5870	-54.76	-2.48	-0.1
38	SLV 4	-13	1153	5870	-54.76	-2.48	-0.1
38	SLV 5	19	3373	7695	-160.33	4.55	0.06
38	SLV 6	19	3373	7695	-160.33	4.55	0.06
38	SLV 7	-17	-741	3338	35.42	-3.37	-0.12
38	SLV 8	-17	-741	3338	35.42	-3.37	-0.12
38	SLV 9	26	2984	6832	-141.76	6.15	0.09
38	SLV 10	26	2984	6832	-141.76	6.15	0.09
38	SLV 11	-10	-1130	2475	54	-1.76	-0.08
38	SLV 12	-10	-1130	2475	54	-1.76	-0.08
38	SLV 13	22	1090	4300	-51.57	5.26	0.08
38	SLV 14	22	1090	4300	-51.57	5.26	0.08
38	SLV 15	11	-144	2993	7.15	2.88	0.02
38	SLV 16	11	-144	2993	7.15	2.88	0.02
39	SLU 1	-5	17	133	0.13	-1.18	0.22
39	SLU 2	-5	18	138	0.08	-1.21	0.23
39	SLU 3	-5	13	123	0.26	-1.2	0.23
39	SLU 4	-5	14	125	0.23	-1.22	0.23
39	SLU 5	-6	15	130	0.17	-1.22	0.23
39	SLU 6	-5	10	115	0.35	-1.22	0.23
39	SLU 7	-6	11	118	0.32	-1.23	0.23
39	SLU 8	-5	11	119	0.3	-1.21	0.23
39	SLU 9	-5	12	122	0.27	-1.22	0.23
39	SLU 10	-7	30	201	-0.13	-1.71	0.32
39	SLU 11	-7	25	186	0.05	-1.71	0.32
39	SLU 12	-7	26	189	0.02	-1.72	0.32
39	SLU 13	-7	28	194	-0.05	-1.72	0.32
39	SLU 14	-7	23	179	0.13	-1.72	0.32
39	SLU 15	-7	24	181	0.1	-1.73	0.32
39	SLU 16	-7	24	183	0.09	-1.71	0.32
39	SLU 17	-7	25	185	0.06	-1.72	0.32
39	SLU 18	-8	34	224	-0.17	-1.9	0.35
39	SLU 19	-8	35	227	-0.2	-1.92	0.35
39	SLU 20	-8	32	217	-0.09	-1.91	0.35
39	SLU 21	-8	33	220	-0.12	-1.93	0.36
39	SLU 22	-6	8	116	0.49	-1.41	0.26
39	SLU 23	-6	9	120	0.43	-1.44	0.27
39	SLU 24	-6	4	105	0.61	-1.43	0.27
39	SLU 25	-6	5	107	0.58	-1.45	0.27
39	SLU 26	-6	7	113	0.52	-1.45	0.27
39	SLU 27	-6	1	98	0.7	-1.44	0.27
39	SLU 28	-6	2	100	0.67	-1.46	0.27
39	SLU 29	-6	3	101	0.66	-1.43	0.27
39	SLU 30	-6	4	104	0.63	-1.45	0.27
39	SLU 31	-8	22	184	0.22	-1.94	0.36
39	SLU 32	-8	16	168	0.4	-1.93	0.36
39	SLU 33	-8	17	171	0.37	-1.95	0.36
39	SLU 34	-8	19	176	0.31	-1.95	0.36
39	SLU 35	-8	14	161	0.49	-1.94	0.36
39	SLU 36	-8	15	164	0.46	-1.96	0.36
39	SLU 37	-8	15	165	0.45	-1.94	0.36
39	SLU 38	-8	16	167	0.42	-1.95	0.36
39	SLU 39	-9	25	207	0.18	-2.13	0.39
39	SLU 40	-9	26	209	0.15	-2.14	0.4
39	SLU 41	-9	23	199	0.27	-2.14	0.39
39	SLU 42	-9	24	202	0.24	-2.16	0.4
39	SLU 43	-6	24	180	0.05	-1.46	0.27
39	SLU 44	-7	26	184	0	-1.49	0.28
39	SLU 45	-7	21	169	0.18	-1.48	0.28
39	SLU 46	-7	22	171	0.15	-1.5	0.28
39	SLU 47	-7	23	177	0.08	-1.5	0.28
39	SLU 48	-7	18	161	0.26	-1.49	0.28
39	SLU 49	-7	19	164	0.23	-1.51	0.28
39	SLU 50	-7	19	165	0.22	-1.48	0.28

Nodo	Cont.	Reazione a traslazione			Reazione a rotazione		
Ind.	N.br.	x	y	z	x	y	z
39	SLU 51	-7	20	168	0.19	-1.5	0.28
39	SLU 52	-8	38	247	-0.21	-1.99	0.37
39	SLU 53	-8	33	232	-0.03	-1.98	0.37
39	SLU 54	-8	34	235	-0.06	-2	0.37
39	SLU 55	-8	36	240	-0.13	-2	0.37
39	SLU 56	-8	31	225	0.05	-2	0.37
39	SLU 57	-8	31	228	0.02	-2.01	0.37
39	SLU 58	-8	32	229	0.01	-1.99	0.37
39	SLU 59	-8	33	231	-0.02	-2	0.37
39	SLU 60	-9	42	270	-0.25	-2.18	0.4
39	SLU 61	-9	43	273	-0.28	-2.19	0.41
39	SLU 62	-9	40	263	-0.17	-2.19	0.41
39	SLU 63	-9	41	266	-0.2	-2.21	0.41
39	SLU 64	-7	16	162	0.4	-1.69	0.32
39	SLU 65	-8	17	166	0.35	-1.71	0.32
39	SLU 66	-7	12	151	0.53	-1.71	0.32
39	SLU 67	-8	13	154	0.5	-1.72	0.32
39	SLU 68	-8	15	159	0.44	-1.73	0.32
39	SLU 69	-8	9	144	0.62	-1.72	0.32
39	SLU 70	-8	10	146	0.59	-1.74	0.33
39	SLU 71	-7	11	147	0.57	-1.71	0.32
39	SLU 72	-8	12	150	0.54	-1.73	0.32
39	SLU 73	-9	30	230	0.14	-2.22	0.41
39	SLU 74	-9	24	215	0.32	-2.21	0.41
39	SLU 75	-9	25	217	0.29	-2.23	0.41
39	SLU 76	-9	27	222	0.23	-2.23	0.41
39	SLU 77	-9	22	207	0.41	-2.22	0.41
39	SLU 78	-9	23	210	0.38	-2.24	0.42
39	SLU 79	-9	23	211	0.36	-2.21	0.41
39	SLU 80	-9	24	214	0.33	-2.23	0.41
39	SLU 81	-10	33	253	0.1	-2.41	0.44
39	SLU 82	-10	34	255	0.07	-2.42	0.45
39	SLU 83	-10	31	245	0.19	-2.42	0.45
39	SLU 84	-10	32	248	0.16	-2.43	0.45
39	SLE RA 1	-5	14	128	0.23	-1.25	0.23
39	SLE RA 2	-6	15	131	0.2	-1.27	0.24
39	SLE RA 3	-6	12	121	0.32	-1.26	0.24
39	SLE RA 4	-6	12	123	0.3	-1.27	0.24
39	SLE RA 5	-6	13	126	0.26	-1.27	0.24
39	SLE RA 6	-6	10	116	0.38	-1.27	0.24
39	SLE RA 7	-6	10	118	0.36	-1.28	0.24
39	SLE RA 8	-6	11	119	0.35	-1.26	0.24
39	SLE RA 9	-6	11	120	0.33	-1.27	0.24
39	SLE RA 10	-7	23	174	0.06	-1.6	0.3
39	SLE RA 11	-7	20	164	0.18	-1.6	0.3
39	SLE RA 12	-7	20	165	0.16	-1.61	0.3
39	SLE RA 13	-7	22	169	0.11	-1.61	0.3
39	SLE RA 14	-7	18	159	0.23	-1.6	0.3
39	SLE RA 15	-7	19	160	0.21	-1.61	0.3
39	SLE RA 16	-7	19	161	0.21	-1.6	0.3
39	SLE RA 17	-7	20	163	0.19	-1.61	0.3
39	SLE RA 18	-7	26	189	0.03	-1.73	0.32
39	SLE RA 19	-7	26	191	0.01	-1.74	0.32
39	SLE RA 20	-7	24	184	0.09	-1.74	0.32
39	SLE RA 21	-7	25	186	0.07	-1.75	0.32
39	SLE FR 1	-5	14	128	0.23	-1.25	0.23
39	SLE FR 2	-5	14	129	0.23	-1.25	0.23
39	SLE FR 3	-5	13	126	0.26	-1.25	0.23
39	SLE FR 4	-6	18	147	0.17	-1.4	0.26
39	SLE FR 5	-6	17	145	0.19	-1.4	0.26
39	SLE FR 6	-6	20	159	0.13	-1.49	0.28
39	SLE QP 1	-5	14	128	0.23	-1.25	0.23
39	SLE QP 2	-6	18	147	0.17	-1.39	0.26
39	SLD 1	-20	69	290	-1.61	-3.88	0.69
39	SLD 2	-20	69	290	-1.61	-3.88	0.69
39	SLD 3	-22	-17	50	1.34	-3.51	0.76
39	SLD 4	-22	-17	50	1.34	-3.51	0.76
39	SLD 5	-6	164	553	-4.82	-2.7	0.27
39	SLD 6	-6	164	553	-4.82	-2.7	0.27
39	SLD 7	-14	-123	-246	4.98	-1.47	0.52
39	SLD 8	-14	-123	-246	4.98	-1.47	0.52
39	SLD 9	3	158	539	-4.64	-1.32	0
39	SLD 10	3	158	539	-4.64	-1.32	0
39	SLD 11	-6	-129	-260	5.17	-0.09	0.25
39	SLD 12	-6	-129	-260	5.17	-0.09	0.25
39	SLD 13	10	52	243	-0.99	0.73	-0.24
39	SLD 14	10	52	243	-0.99	0.73	-0.24
39	SLD 15	8	-34	3	1.95	1.1	-0.17
39	SLD 16	8	-34	3	1.95	1.1	-0.17
39	SLV 1	-39	140	484	-4.02	-7.35	1.27
39	SLV 2	-39	140	484	-4.02	-7.35	1.27
39	SLV 3	-45	-62	-76	2.86	-6.44	1.46
39	SLV 4	-45	-62	-76	2.86	-6.44	1.46
39	SLV 5	-7	359	1098	-11.51	-4.55	0.29
39	SLV 6	-7	359	1098	-11.51	-4.55	0.29
39	SLV 7	-27	-311	-770	11.41	-1.53	0.9
39	SLV 8	-27	-311	-770	11.41	-1.53	0.9
39	SLV 9	15	346	1063	-11.06	-1.25	-0.38
39	SLV 10	15	346	1063	-11.06	-1.25	-0.38
39	SLV 11	-5	-324	-804	11.86	1.77	0.23
39	SLV 12	-5	-324	-804	11.86	1.77	0.23

Nodo	Cont.	Reazione a traslazione			Reazione a rotazione		
Ind.	N.br.	x	y	z	x	y	z
39	SLV 13	33	97	369	-2.51	3.66	-0.94
39	SLV 14	33	97	369	-2.51	3.66	-0.94
39	SLV 15	27	-104	-191	4.36	4.57	-0.75
39	SLV 16	27	-104	-191	4.36	4.57	-0.75
40	SLU 1	-5	601	3649	-19.18	-1.33	0.01
40	SLU 2	-5	594	3646	-18.89	-1.25	0.01
40	SLU 3	-5	617	3724	-19.74	-1.36	0.01
40	SLU 4	-5	613	3721	-19.56	-1.31	0.01
40	SLU 5	-5	605	3699	-19.26	-1.27	0.01
40	SLU 6	-5	628	3777	-20.11	-1.38	0.01
40	SLU 7	-5	624	3775	-19.94	-1.33	0.01
40	SLU 8	-5	623	3756	-19.92	-1.37	0.01
40	SLU 9	-5	619	3754	-19.75	-1.32	0.01
40	SLU 10	-5	692	4165	-22.32	-1.43	0.01
40	SLU 11	-6	715	4243	-23.17	-1.55	0.01
40	SLU 12	-5	711	4241	-22.99	-1.5	0.01
40	SLU 13	-5	703	4218	-22.69	-1.45	0.01
40	SLU 14	-6	726	4296	-23.54	-1.57	0.01
40	SLU 15	-6	722	4294	-23.37	-1.52	0.01
40	SLU 16	-6	721	4275	-23.36	-1.56	0.01
40	SLU 17	-5	717	4273	-23.18	-1.51	0.01
40	SLU 18	-6	741	4391	-24.08	-1.6	0.01
40	SLU 19	-6	737	4389	-23.91	-1.55	0.01
40	SLU 20	-6	752	4445	-24.45	-1.62	0.01
40	SLU 21	-6	748	4443	-24.28	-1.57	0.01
40	SLU 22	-5	680	4050	-21.91	-1.51	0.01
40	SLU 23	-5	673	4046	-21.63	-1.42	0.01
40	SLU 24	-5	696	4124	-22.47	-1.54	0.01
40	SLU 25	-5	692	4122	-22.3	-1.48	0.01
40	SLU 26	-5	684	4100	-22	-1.44	0.01
40	SLU 27	-6	707	4178	-22.84	-1.56	0.01
40	SLU 28	-5	703	4176	-22.67	-1.51	0.01
40	SLU 29	-6	702	4157	-22.66	-1.55	0.01
40	SLU 30	-5	698	4154	-22.49	-1.49	0.01
40	SLU 31	-6	771	4566	-25.06	-1.61	0.01
40	SLU 32	-6	794	4644	-25.9	-1.72	0.01
40	SLU 33	-6	790	4642	-25.73	-1.67	0.01
40	SLU 34	-6	782	4619	-25.43	-1.63	0.01
40	SLU 35	-6	805	4697	-26.27	-1.74	0.01
40	SLU 36	-6	801	4695	-26.1	-1.69	0.01
40	SLU 37	-6	800	4676	-26.09	-1.73	0.01
40	SLU 38	-6	796	4674	-25.92	-1.68	0.01
40	SLU 39	-6	820	4792	-26.81	-1.77	0.01
40	SLU 40	-6	816	4790	-26.64	-1.72	0.01
40	SLU 41	-6	831	4846	-27.19	-1.79	0.01
40	SLU 42	-6	827	4843	-27.01	-1.74	0.01
40	SLU 43	-6	754	4606	-24	-1.67	0.01
40	SLU 44	-6	747	4603	-23.71	-1.59	0.01
40	SLU 45	-6	770	4681	-24.55	-1.7	0.01
40	SLU 46	-6	766	4679	-24.38	-1.65	0.01
40	SLU 47	-6	758	4656	-24.08	-1.61	0.01
40	SLU 48	-6	781	4734	-24.93	-1.72	0.01
40	SLU 49	-6	777	4732	-24.75	-1.67	0.01
40	SLU 50	-6	776	4713	-24.74	-1.71	0.01
40	SLU 51	-6	772	4711	-24.57	-1.66	0.01
40	SLU 52	-6	845	5122	-27.14	-1.77	0.01
40	SLU 53	-7	868	5200	-27.98	-1.89	0.01
40	SLU 54	-7	864	5198	-27.81	-1.84	0.01
40	SLU 55	-7	856	5176	-27.51	-1.79	0.01
40	SLU 56	-7	879	5254	-28.36	-1.91	0.01
40	SLU 57	-7	875	5252	-28.18	-1.86	0.01
40	SLU 58	-7	874	5233	-28.17	-1.9	0.01
40	SLU 59	-7	870	5230	-28	-1.85	0.01
40	SLU 60	-7	894	5349	-28.9	-1.94	0.01
40	SLU 61	-7	890	5347	-28.72	-1.89	0.01
40	SLU 62	-7	905	5402	-29.27	-1.96	0.01
40	SLU 63	-7	901	5400	-29.1	-1.91	0.01
40	SLU 64	-7	833	5007	-26.73	-1.85	0.01
40	SLU 65	-6	826	5004	-26.44	-1.76	0.01
40	SLU 66	-7	849	5082	-27.29	-1.88	0.01
40	SLU 67	-7	845	5080	-27.11	-1.82	0.01
40	SLU 68	-7	837	5057	-26.81	-1.78	0.01
40	SLU 69	-7	860	5135	-27.66	-1.9	0.01
40	SLU 70	-7	856	5133	-27.49	-1.85	0.01
40	SLU 71	-7	855	5114	-27.48	-1.89	0.01
40	SLU 72	-7	851	5112	-27.3	-1.84	0.01
40	SLU 73	-7	925	5523	-29.87	-1.95	0.01
40	SLU 74	-7	947	5601	-30.72	-2.06	0.01
40	SLU 75	-7	943	5599	-30.54	-2.01	0.01
40	SLU 76	-7	935	5577	-30.24	-1.97	0.01
40	SLU 77	-7	958	5655	-31.09	-2.08	0.01
40	SLU 78	-7	954	5653	-30.92	-2.03	0.01
40	SLU 79	-7	953	5633	-30.91	-2.07	0.01
40	SLU 80	-7	949	5631	-30.73	-2.02	0.01
40	SLU 81	-7	973	5749	-31.63	-2.11	0.01
40	SLU 82	-7	969	5747	-31.46	-2.06	0.01
40	SLU 83	-8	984	5803	-32	-2.13	0.01
40	SLU 84	-7	980	5801	-31.83	-2.08	0.01
40	SLE RA 1	-5	623	3764	-19.96	-1.38	0.01
40	SLE RA 2	-5	619	3761	-19.77	-1.32	0.01
40	SLE RA 3	-5	634	3813	-20.33	-1.4	0.01

Nodo	Cont.	Reazione a traslazione			Reazione a rotazione		
Ind.	N.br.	x	y	z	x	y	z
40	SLE RA 4	-5	631	3812	-20.22	-1.37	0.01
40	SLE RA 5	-5	626	3797	-20.02	-1.34	0.01
40	SLE RA 6	-5	641	3849	-20.58	-1.42	0.01
40	SLE RA 7	-5	639	3847	-20.46	-1.38	0.01
40	SLE RA 8	-5	638	3835	-20.46	-1.41	0.01
40	SLE RA 9	-5	635	3833	-20.34	-1.37	0.01
40	SLE RA 10	-5	684	4108	-22.06	-1.45	0.01
40	SLE RA 11	-5	700	4160	-22.62	-1.53	0.01
40	SLE RA 12	-5	697	4158	-22.5	-1.49	0.01
40	SLE RA 13	-5	692	4143	-22.3	-1.46	0.01
40	SLE RA 14	-6	707	4195	-22.87	-1.54	0.01
40	SLE RA 15	-5	704	4194	-22.75	-1.51	0.01
40	SLE RA 16	-5	704	4181	-22.74	-1.53	0.01
40	SLE RA 17	-5	701	4180	-22.63	-1.5	0.01
40	SLE RA 18	-6	717	4258	-23.23	-1.56	0.01
40	SLE RA 19	-5	714	4257	-23.11	-1.52	0.01
40	SLE RA 20	-6	724	4294	-23.48	-1.57	0.01
40	SLE RA 21	-6	722	4293	-23.36	-1.54	0.01
40	SLE FR 1	-5	623	3764	-19.96	-1.38	0.01
40	SLE FR 2	-5	623	3763	-19.92	-1.37	0.01
40	SLE FR 3	-5	626	3778	-20.06	-1.39	0.01
40	SLE FR 4	-5	651	3912	-20.9	-1.42	0.01
40	SLE FR 5	-5	654	3926	-21.04	-1.44	0.01
40	SLE FR 6	-5	670	4011	-21.59	-1.47	0.01
40	SLE QP 1	-5	623	3764	-19.96	-1.38	0.01
40	SLE QP 2	-5	652	3912	-20.94	-1.44	0.01
40	SLD 1	-9	646	3672	-21.35	-0.97	0.01
40	SLD 2	-9	646	3672	-21.35	-0.97	0.01
40	SLD 3	-6	244	3242	-2.99	-0.6	0
40	SLD 4	-6	244	3242	-2.99	-0.6	0
40	SLD 5	-10	1259	4492	-48.91	-1.86	0.02
40	SLD 6	-10	1259	4492	-48.91	-1.86	0.02
40	SLD 7	-2	-80	3059	12.29	-0.62	0
40	SLD 8	-2	-80	3059	12.29	-0.62	0
40	SLD 9	-8	1383	4765	-54.17	-2.25	0.02
40	SLD 10	-8	1383	4765	-54.17	-2.25	0.02
40	SLD 11	-1	44	3332	7.02	-1.01	0
40	SLD 12	-1	44	3332	7.02	-1.01	0
40	SLD 13	-4	1059	4582	-38.89	-2.27	0.02
40	SLD 14	-4	1059	4582	-38.89	-2.27	0.02
40	SLD 15	-2	657	4152	-20.54	-1.9	0.01
40	SLD 16	-2	657	4152	-20.54	-1.9	0.01
40	SLV 1	-13	648	3378	-22.29	-0.37	0.01
40	SLV 2	-13	648	3378	-22.29	-0.37	0.01
40	SLV 3	-8	-288	2373	20.51	0.51	-0.01
40	SLV 4	-8	-288	2373	20.51	0.51	-0.01
40	SLV 5	-15	2072	5277	-86.27	-2.45	0.03
40	SLV 6	-15	2072	5277	-86.27	-2.45	0.03
40	SLV 7	2	-1051	1925	56.42	0.48	-0.01
40	SLV 8	2	-1051	1925	56.42	0.48	-0.01
40	SLV 9	-12	2354	5899	-98.3	-3.35	0.03
40	SLV 10	-12	2354	5899	-98.3	-3.35	0.03
40	SLV 11	5	-768	2547	44.39	-0.42	-0.01
40	SLV 12	5	-768	2547	44.39	-0.42	-0.01
40	SLV 13	-2	1592	5451	-62.39	-3.38	0.02
40	SLV 14	-2	1592	5451	-62.39	-3.38	0.02
40	SLV 15	3	655	4446	-19.59	-2.5	0.01
40	SLV 16	3	655	4446	-19.59	-2.5	0.01
41	SLU 1	-3	-173	314	15.12	-1.48	0
41	SLU 2	2	-191	459	17.09	1.47	-0.01
41	SLU 3	-3	-175	307	15.34	-1.52	0
41	SLU 4	0	-186	393	16.52	0.25	0
41	SLU 5	2	-194	453	17.32	1.45	-0.01
41	SLU 6	-3	-177	301	15.56	-1.54	0
41	SLU 7	0	-188	387	16.75	0.22	0
41	SLU 8	-3	-177	302	15.57	-1.52	0
41	SLU 9	0	-188	389	16.75	0.24	0
41	SLU 10	2	-206	420	18.43	1.3	-0.01
41	SLU 11	-3	-189	268	16.68	-1.69	0
41	SLU 12	0	-201	354	17.86	0.07	0
41	SLU 13	1	-208	414	18.66	1.27	-0.01
41	SLU 14	-3	-192	262	16.9	-1.71	0
41	SLU 15	0	-203	348	18.09	0.05	0
41	SLU 16	-3	-192	263	16.91	-1.69	0
41	SLU 17	0	-203	350	18.1	0.07	0
41	SLU 18	-3	-194	258	17.03	-1.72	0
41	SLU 19	0	-205	345	18.22	0.05	0
41	SLU 20	-3	-196	252	17.26	-1.74	0
41	SLU 21	-1	-207	339	18.44	0.02	0
41	SLU 22	-3	-185	280	16.22	-1.61	0
41	SLU 23	2	-203	425	18.19	1.33	-0.01
41	SLU 24	-3	-187	273	16.44	-1.66	0
41	SLU 25	0	-198	360	17.62	0.11	0
41	SLU 26	2	-205	419	18.42	1.31	-0.01
41	SLU 27	-3	-189	267	16.66	-1.68	0
41	SLU 28	0	-200	354	17.85	0.09	0
41	SLU 29	-3	-189	268	16.67	-1.66	0
41	SLU 30	0	-200	355	17.85	0.11	0
41	SLU 31	1	-218	386	19.54	1.16	-0.01
41	SLU 32	-3	-201	234	17.78	-1.83	0
41	SLU 33	-1	-212	321	18.96	-0.06	0

Nodo	Cont.	Reazione a traslazione			Reazione a rotazione		
Ind.	N.br.	x	y	z	x	y	z
41	SLU 34	1	-220	380	19.76	1.14	-0.01
41	SLU 35	-3	-203	228	18	-1.85	0
41	SLU 36	-1	-214	315	19.19	-0.09	0
41	SLU 37	-3	-203	229	18.01	-1.83	0
41	SLU 38	-1	-215	316	19.2	-0.06	0
41	SLU 39	-3	-205	225	18.14	-1.86	0
41	SLU 40	-1	-217	311	19.32	-0.09	0
41	SLU 41	-4	-208	219	18.36	-1.88	0
41	SLU 42	-1	-219	305	19.55	-0.11	0
41	SLU 43	-3	-221	420	19.28	-1.87	0
41	SLU 44	1	-239	564	21.25	1.07	-0.01
41	SLU 45	-4	-223	412	19.49	-1.92	0
41	SLU 46	-1	-234	499	20.68	-0.15	0
41	SLU 47	1	-241	558	21.48	1.05	-0.01
41	SLU 48	-4	-225	406	19.72	-1.94	0
41	SLU 49	-1	-236	493	20.9	-0.17	0
41	SLU 50	-4	-225	408	19.73	-1.92	0
41	SLU 51	-1	-236	495	20.91	-0.15	0
41	SLU 52	1	-254	525	22.59	0.9	-0.01
41	SLU 53	-4	-237	373	20.83	-2.09	0
41	SLU 54	-1	-248	460	22.02	-0.32	0
41	SLU 55	1	-256	519	22.82	0.88	-0.01
41	SLU 56	-4	-239	367	21.06	-2.11	0
41	SLU 57	-1	-250	454	22.25	-0.34	0
41	SLU 58	-4	-239	369	21.07	-2.09	0
41	SLU 59	-1	-251	456	22.25	-0.32	0
41	SLU 60	-4	-241	364	21.19	-2.12	0
41	SLU 61	-1	-253	451	22.38	-0.35	0
41	SLU 62	-4	-244	358	21.42	-2.14	0
41	SLU 63	-1	-255	445	22.6	-0.37	0
41	SLU 64	-4	-232	386	20.38	-2.01	0
41	SLU 65	1	-251	531	22.35	0.93	-0.01
41	SLU 66	-4	-234	379	20.59	-2.05	0
41	SLU 67	-1	-246	465	21.78	-0.29	0
41	SLU 68	1	-253	525	22.58	0.91	-0.01
41	SLU 69	-4	-237	373	20.82	-2.08	0
41	SLU 70	-1	-248	459	22	-0.31	0
41	SLU 71	-4	-237	374	20.83	-2.06	0
41	SLU 72	-1	-248	461	22.01	-0.29	0
41	SLU 73	1	-266	492	23.69	0.76	-0.01
41	SLU 74	-4	-249	340	21.94	-2.23	0
41	SLU 75	-1	-260	426	23.12	-0.46	0
41	SLU 76	0	-268	486	23.92	0.74	-0.01
41	SLU 77	-4	-251	334	22.16	-2.25	0
41	SLU 78	-1	-262	420	23.35	-0.48	0
41	SLU 79	-4	-251	335	22.17	-2.23	0
41	SLU 80	-1	-262	422	23.35	-0.46	0
41	SLU 81	-4	-253	331	22.29	-2.26	0
41	SLU 82	-1	-264	417	23.48	-0.49	0
41	SLU 83	-4	-255	324	22.52	-2.28	0
41	SLU 84	-1	-266	411	23.7	-0.51	0
41	SLE RA 1	-3	-176	304	15.43	-1.52	0
41	SLE RA 2	0	-189	401	16.75	0.45	0
41	SLE RA 3	-3	-178	299	15.58	-1.55	0
41	SLE RA 4	-1	-185	357	16.37	-0.37	0
41	SLE RA 5	0	-190	397	16.9	0.43	0
41	SLE RA 6	-3	-179	295	15.73	-1.56	0
41	SLE RA 7	-1	-186	353	16.52	-0.38	0
41	SLE RA 8	-3	-179	296	15.73	-1.55	0
41	SLE RA 9	-1	-186	354	16.52	-0.37	0
41	SLE RA 10	0	-198	375	17.64	0.33	0
41	SLE RA 11	-3	-187	273	16.47	-1.66	0
41	SLE RA 12	-1	-195	331	17.26	-0.48	0
41	SLE RA 13	0	-200	371	17.79	0.32	0
41	SLE RA 14	-3	-189	269	16.62	-1.67	0
41	SLE RA 15	-1	-196	327	17.41	-0.5	0
41	SLE RA 16	-3	-189	270	16.63	-1.66	0
41	SLE RA 17	-1	-196	328	17.42	-0.48	0
41	SLE RA 18	-3	-190	267	16.71	-1.68	0
41	SLE RA 19	-1	-197	325	17.5	-0.5	0
41	SLE RA 20	-3	-191	263	16.86	-1.69	0
41	SLE RA 21	-1	-199	321	17.65	-0.52	0
41	SLE FR 1	-3	-176	304	15.43	-1.52	0
41	SLE FR 2	-2	-179	324	15.7	-1.12	0
41	SLE FR 3	-3	-177	303	15.49	-1.52	0
41	SLE FR 4	-2	-183	313	16.08	-1.17	0
41	SLE FR 5	-3	-181	292	15.88	-1.57	0
41	SLE FR 6	-3	-183	286	16.07	-1.6	0
41	SLE QP 1	-3	-176	304	15.43	-1.52	0
41	SLE QP 2	-3	-180	293	15.82	-1.57	0
41	SLD 1	8	-85	179	7.23	5.18	-0.01
41	SLD 2	8	-85	179	7.23	5.18	-0.01
41	SLD 3	23	-178	851	15.53	15.41	-0.03
41	SLD 4	23	-178	851	15.53	15.41	-0.03
41	SLD 5	-23	-10	-760	0.64	-15.06	0.03
41	SLD 6	-23	-10	-760	0.64	-15.06	0.03
41	SLD 7	29	-321	1480	28.33	19.04	-0.04
41	SLD 8	29	-321	1480	28.33	19.04	-0.04
41	SLD 9	-34	-40	-893	3.3	-22.17	0.04
41	SLD 10	-34	-40	-893	3.3	-22.17	0.04
41	SLD 11	17	-351	1347	30.99	11.92	-0.03

Nodo	Cont.	Reazione a traslazione			Reazione a rotazione		
Ind.	N.br.	x	y	z	x	y	z
41	SLD 12	17	-351	1347	30.99	11.92	-0.03
41	SLD 13	-29	-183	-264	16.1	-18.54	0.04
41	SLD 14	-29	-183	-264	16.1	-18.54	0.04
41	SLD 15	-14	-276	408	24.41	-8.31	0.01
41	SLD 16	-14	-276	408	24.41	-8.31	0.01
41	SLV 1	22	52	-14	-5.1	14.02	-0.03
41	SLV 2	22	52	-14	-5.1	14.02	-0.03
41	SLV 3	59	-179	1666	15.7	38.58	-0.08
41	SLV 4	59	-179	1666	15.7	38.58	-0.08
41	SLV 5	-52	240	-2347	-22	-34.15	0.07
41	SLV 6	-52	240	-2347	-22	-34.15	0.07
41	SLV 7	72	-530	3253	47.32	47.74	-0.1
41	SLV 8	72	-530	3253	47.32	47.74	-0.1
41	SLV 9	-78	169	-2667	-15.69	-50.87	0.1
41	SLV 10	-78	169	-2667	-15.69	-50.87	0.1
41	SLV 11	46	-600	2934	53.63	31.02	-0.07
41	SLV 12	46	-600	2934	53.63	31.02	-0.07
41	SLV 13	-65	-182	-1079	15.94	-41.72	0.08
41	SLV 14	-65	-182	-1079	15.94	-41.72	0.08
41	SLV 15	-28	-413	601	36.73	-17.15	0.03
41	SLV 16	-28	-413	601	36.73	-17.15	0.03
42	SLU 1	1215	1170	7324	-36.99	18.71	-0.13
42	SLU 2	1456	1202	8059	-37.42	25.2	-0.48
42	SLU 3	1252	1204	7536	-38.05	19.33	-0.14
42	SLU 4	1396	1223	7977	-38.3	23.23	-0.35
42	SLU 5	1483	1222	8199	-38.01	25.76	-0.49
42	SLU 6	1280	1223	7675	-38.64	19.89	-0.14
42	SLU 7	1424	1242	8116	-38.9	23.79	-0.35
42	SLU 8	1270	1209	7604	-38.18	19.83	-0.14
42	SLU 9	1415	1228	8045	-38.44	23.73	-0.35
42	SLU 10	1621	1342	8981	-41.79	28.1	-0.5
42	SLU 11	1417	1343	8458	-42.42	22.23	-0.15
42	SLU 12	1562	1362	8899	-42.67	26.13	-0.37
42	SLU 13	1648	1361	9121	-42.38	28.67	-0.5
42	SLU 14	1445	1363	8598	-43.01	22.79	-0.16
42	SLU 15	1589	1382	9038	-43.27	26.69	-0.37
42	SLU 16	1435	1349	8526	-42.55	22.73	-0.16
42	SLU 17	1580	1368	8967	-42.81	26.63	-0.37
42	SLU 18	1451	1370	8642	-43.23	22.85	-0.16
42	SLU 19	1595	1389	9083	-43.49	26.75	-0.37
42	SLU 20	1479	1389	8782	-43.83	23.41	-0.16
42	SLU 21	1623	1408	9222	-44.08	27.31	-0.37
42	SLU 22	1366	1306	8192	-41.27	21.21	-0.15
42	SLU 23	1606	1337	8927	-41.7	27.71	-0.5
42	SLU 24	1403	1339	8403	-42.33	21.84	-0.15
42	SLU 25	1547	1358	8844	-42.58	25.73	-0.37
42	SLU 26	1634	1357	9066	-42.29	28.27	-0.5
42	SLU 27	1430	1358	8543	-42.92	22.4	-0.16
42	SLU 28	1575	1378	8983	-43.18	26.29	-0.37
42	SLU 29	1421	1345	8471	-42.46	22.34	-0.16
42	SLU 30	1565	1364	8912	-42.72	26.23	-0.37
42	SLU 31	1771	1477	9849	-46.07	30.61	-0.52
42	SLU 32	1568	1479	9325	-46.7	24.74	-0.17
42	SLU 33	1712	1498	9766	-46.95	28.63	-0.38
42	SLU 34	1799	1497	9988	-46.66	31.17	-0.52
42	SLU 35	1596	1498	9465	-47.29	25.3	-0.17
42	SLU 36	1740	1517	9906	-47.55	29.2	-0.38
42	SLU 37	1586	1484	9393	-46.83	25.24	-0.17
42	SLU 38	1731	1504	9834	-47.09	29.14	-0.38
42	SLU 39	1602	1505	9509	-47.51	25.36	-0.17
42	SLU 40	1746	1524	9950	-47.77	29.26	-0.38
42	SLU 41	1629	1525	9649	-48.11	25.92	-0.18
42	SLU 42	1774	1544	10090	-48.36	29.82	-0.39
42	SLU 43	1528	1475	9224	-46.62	23.46	-0.17
42	SLU 44	1768	1507	9959	-47.05	29.95	-0.52
42	SLU 45	1565	1508	9436	-47.68	24.08	-0.17
42	SLU 46	1709	1527	9877	-47.93	27.98	-0.38
42	SLU 47	1796	1526	10099	-47.64	30.52	-0.52
42	SLU 48	1593	1528	9575	-48.27	24.64	-0.18
42	SLU 49	1737	1547	10016	-48.53	28.54	-0.39
42	SLU 50	1583	1514	9504	-47.81	24.58	-0.18
42	SLU 51	1727	1533	9944	-48.07	28.48	-0.39
42	SLU 52	1934	1646	10881	-51.42	32.85	-0.53
42	SLU 53	1730	1648	10358	-52.05	26.98	-0.19
42	SLU 54	1874	1667	10799	-52.3	30.88	-0.4
42	SLU 55	1961	1666	11021	-52.01	33.42	-0.54
42	SLU 56	1758	1667	10498	-52.64	27.54	-0.19
42	SLU 57	1902	1686	10938	-52.9	31.44	-0.4
42	SLU 58	1748	1654	10426	-52.18	27.48	-0.19
42	SLU 59	1893	1673	10867	-52.44	31.38	-0.4
42	SLU 60	1764	1675	10542	-52.86	27.6	-0.19
42	SLU 61	1908	1694	10983	-53.12	31.5	-0.4
42	SLU 62	1791	1694	10682	-53.46	28.17	-0.19
42	SLU 63	1936	1713	11122	-53.71	32.06	-0.41
42	SLU 64	1679	1610	10092	-50.9	25.96	-0.18
42	SLU 65	1919	1642	10826	-51.33	32.46	-0.53
42	SLU 66	1716	1644	10303	-51.96	26.59	-0.19
42	SLU 67	1860	1663	10744	-52.21	30.48	-0.4
42	SLU 68	1947	1662	10966	-51.92	33.02	-0.54
42	SLU 69	1743	1663	10443	-52.55	27.15	-0.19
42	SLU 70	1888	1682	10883	-52.81	31.05	-0.4

Nodo	Cont.	Reazione a traslazione			Reazione a rotazione		
Ind.	N.br.	x	y	z	x	y	z
42	SLU 71	1734	1649	10371	-52.09	27.09	-0.19
42	SLU 72	1878	1668	10812	-52.35	30.99	-0.4
42	SLU 73	2084	1782	11749	-55.7	35.36	-0.55
42	SLU 74	1881	1783	11225	-56.33	29.49	-0.2
42	SLU 75	2025	1802	11666	-56.58	33.39	-0.42
42	SLU 76	2112	1801	11888	-56.29	35.92	-0.55
42	SLU 77	1908	1803	11365	-56.92	30.05	-0.21
42	SLU 78	2053	1822	11806	-57.18	33.95	-0.42
42	SLU 79	1899	1789	11293	-56.46	29.99	-0.21
42	SLU 80	2043	1808	11734	-56.72	33.89	-0.42
42	SLU 81	1914	1810	11409	-57.14	30.11	-0.21
42	SLU 82	2059	1829	11850	-57.4	34.01	-0.42
42	SLU 83	1942	1829	11549	-57.74	30.67	-0.21
42	SLU 84	2086	1849	11990	-57.99	34.57	-0.42
42	SLE RA 1	1258	1209	7572	-38.21	19.42	-0.14
42	SLE RA 2	1418	1230	8062	-38.5	23.75	-0.37
42	SLE RA 3	1283	1231	7713	-38.92	19.84	-0.14
42	SLE RA 4	1379	1244	8007	-39.09	22.43	-0.28
42	SLE RA 5	1437	1243	8155	-38.9	24.13	-0.37
42	SLE RA 6	1301	1244	7806	-39.32	20.21	-0.14
42	SLE RA 7	1397	1257	8100	-39.49	22.81	-0.28
42	SLE RA 8	1295	1235	7758	-39.01	20.17	-0.14
42	SLE RA 9	1391	1248	8052	-39.18	22.77	-0.28
42	SLE RA 10	1529	1323	8677	-41.41	25.69	-0.38
42	SLE RA 11	1393	1324	8328	-41.83	21.77	-0.15
42	SLE RA 12	1489	1337	8622	-42	24.37	-0.29
42	SLE RA 13	1547	1336	8770	-41.81	26.06	-0.39
42	SLE RA 14	1411	1337	8421	-42.23	22.15	-0.15
42	SLE RA 15	1508	1350	8715	-42.4	24.74	-0.3
42	SLE RA 16	1405	1328	8373	-41.92	22.11	-0.15
42	SLE RA 17	1501	1341	8667	-42.09	24.7	-0.29
42	SLE RA 18	1415	1342	8451	-42.38	22.19	-0.15
42	SLE RA 19	1512	1355	8745	-42.55	24.78	-0.29
42	SLE RA 20	1434	1355	8544	-42.77	22.56	-0.16
42	SLE RA 21	1530	1368	8838	-42.94	25.16	-0.3
42	SLE FR 1	1258	1209	7572	-38.21	19.42	-0.14
42	SLE FR 2	1290	1213	7670	-38.27	20.29	-0.18
42	SLE FR 3	1265	1214	7609	-38.37	19.57	-0.14
42	SLE FR 4	1337	1253	7934	-39.52	21.12	-0.19
42	SLE FR 5	1313	1254	7873	-39.62	20.4	-0.14
42	SLE FR 6	1337	1276	8011	-40.29	20.8	-0.15
42	SLE QP 1	1258	1209	7572	-38.21	19.42	-0.14
42	SLE QP 2	1305	1249	7836	-39.46	20.25	-0.14
42	SLD 1	2330	1773	11956	-56.07	48.41	-0.53
42	SLD 2	2330	1773	11956	-56.07	48.41	-0.53
42	SLD 3	2048	1381	10126	-41.79	43.62	-0.17
42	SLD 4	2048	1381	10126	-41.79	43.62	-0.17
42	SLD 5	2039	1999	11847	-66.1	35.96	-0.81
42	SLD 6	2039	1999	11847	-66.1	35.96	-0.81
42	SLD 7	1102	695	5747	-18.5	20.01	0.4
42	SLD 8	1102	695	5747	-18.5	20.01	0.4
42	SLD 9	1509	1803	9924	-60.42	20.5	-0.68
42	SLD 10	1509	1803	9924	-60.42	20.5	-0.68
42	SLD 11	572	498	3824	-12.82	4.55	0.53
42	SLD 12	572	498	3824	-12.82	4.55	0.53
42	SLD 13	562	1117	5546	-37.14	-3.12	-0.11
42	SLD 14	562	1117	5546	-37.14	-3.12	-0.11
42	SLD 15	281	725	3716	-22.86	-7.91	0.25
42	SLD 16	281	725	3716	-22.86	-7.91	0.25
42	SLV 1	3665	2472	17370	-78.33	85.03	-1.11
42	SLV 2	3665	2472	17370	-78.33	85.03	-1.11
42	SLV 3	2992	1559	13087	-44.98	73.05	-0.2
42	SLV 4	2992	1559	13087	-44.98	73.05	-0.2
42	SLV 5	3034	3000	17192	-101.7	57.86	-1.81
42	SLV 6	3034	3000	17192	-101.7	57.86	-1.81
42	SLV 7	791	-43	2915	9.46	17.92	1.22
42	SLV 8	791	-43	2915	9.46	17.92	1.22
42	SLV 9	1819	2541	12756	-88.39	22.58	-1.5
42	SLV 10	1819	2541	12756	-88.39	22.58	-1.5
42	SLV 11	-423	-503	-1520	22.78	-17.36	1.53
42	SLV 12	-423	-503	-1520	22.78	-17.36	1.53
42	SLV 13	-382	939	2584	-33.94	-32.55	-0.08
42	SLV 14	-382	939	2584	-33.94	-32.55	-0.08
42	SLV 15	-1055	26	-1699	-0.59	-44.53	0.82
42	SLV 16	-1055	26	-1699	-0.59	-44.53	0.82
43	SLU 1	-63	7	5013	-5.09	25.45	-0.44
43	SLU 2	118	9	5452	-10.54	38.63	-0.32
43	SLU 3	-64	7	5146	-5.25	26.37	-0.45
43	SLU 4	45	9	5409	-8.52	34.28	-0.38
43	SLU 5	123	9	5538	-10.63	39.56	-0.32
43	SLU 6	-59	7	5232	-5.34	27.3	-0.46
43	SLU 7	50	9	5495	-8.61	35.21	-0.39
43	SLU 8	-53	7	5185	-5.27	27.31	-0.46
43	SLU 9	56	9	5449	-8.54	35.22	-0.38
43	SLU 10	132	10	6086	-11.1	42.86	-0.37
43	SLU 11	-50	8	5780	-5.81	30.6	-0.51
43	SLU 12	59	9	6044	-9.08	38.5	-0.44
43	SLU 13	137	10	6173	-11.19	43.79	-0.38
43	SLU 14	-45	8	5867	-5.9	31.53	-0.52
43	SLU 15	64	10	6130	-9.17	39.43	-0.44
43	SLU 16	-39	8	5820	-5.83	31.54	-0.51

Nodo	Cont.	Reazione a traslazione			Reazione a rotazione		
Ind.	N.br.	x	y	z	x	y	z
43	SLU 17	70	9	6083	-9.1	39.44	-0.44
43	SLU 18	-44	8	5920	-5.89	31.49	-0.52
43	SLU 19	65	10	6183	-9.16	39.4	-0.45
43	SLU 20	-38	8	6006	-5.98	32.42	-0.53
43	SLU 21	71	10	6269	-9.25	40.32	-0.46
43	SLU 22	-61	8	5601	-5.65	28.98	-0.49
43	SLU 23	121	10	6040	-11.11	42.17	-0.37
43	SLU 24	-61	8	5734	-5.81	29.9	-0.5
43	SLU 25	47	9	5997	-9.08	37.81	-0.43
43	SLU 26	126	10	6126	-11.2	43.1	-0.38
43	SLU 27	-56	8	5820	-5.9	30.83	-0.51
43	SLU 28	53	10	6083	-9.17	38.74	-0.44
43	SLU 29	-50	8	5773	-5.84	30.84	-0.51
43	SLU 30	59	9	6037	-9.11	38.75	-0.44
43	SLU 31	135	11	6675	-11.67	46.39	-0.43
43	SLU 32	-48	9	6369	-6.37	34.13	-0.56
43	SLU 33	61	10	6632	-9.64	42.04	-0.49
43	SLU 34	140	11	6761	-11.76	47.32	-0.44
43	SLU 35	-42	9	6455	-6.46	35.06	-0.57
43	SLU 36	67	10	6718	-9.73	42.97	-0.5
43	SLU 37	-36	9	6408	-6.39	35.07	-0.57
43	SLU 38	73	10	6671	-9.67	42.98	-0.49
43	SLU 39	-41	9	6508	-6.45	35.02	-0.57
43	SLU 40	68	10	6771	-9.72	42.93	-0.5
43	SLU 41	-36	9	6594	-6.54	35.95	-0.58
43	SLU 42	73	10	6857	-9.82	43.86	-0.51
43	SLU 43	-83	9	6315	-6.43	31.88	-0.55
43	SLU 44	98	11	6754	-11.88	45.06	-0.43
43	SLU 45	-84	9	6448	-6.58	32.8	-0.56
43	SLU 46	25	10	6711	-9.85	40.71	-0.49
43	SLU 47	104	11	6840	-11.97	45.99	-0.44
43	SLU 48	-79	9	6534	-6.67	33.73	-0.57
43	SLU 49	30	11	6798	-9.94	41.64	-0.5
43	SLU 50	-73	9	6487	-6.61	33.74	-0.57
43	SLU 51	36	10	6751	-9.88	41.65	-0.5
43	SLU 52	112	12	7389	-12.44	49.28	-0.49
43	SLU 53	-70	10	7083	-7.14	37.02	-0.62
43	SLU 54	39	11	7346	-10.41	44.93	-0.55
43	SLU 55	117	12	7475	-12.53	50.21	-0.5
43	SLU 56	-65	10	7169	-7.23	37.95	-0.63
43	SLU 57	44	11	7432	-10.5	45.86	-0.56
43	SLU 58	-59	10	7122	-7.17	37.96	-0.63
43	SLU 59	50	11	7385	-10.44	45.87	-0.55
43	SLU 60	-63	10	7222	-7.22	37.91	-0.63
43	SLU 61	45	11	7485	-10.5	45.82	-0.56
43	SLU 62	-58	10	7308	-7.32	38.84	-0.64
43	SLU 63	51	12	7571	-10.59	46.75	-0.57
43	SLU 64	-81	10	6903	-6.99	35.41	-0.61
43	SLU 65	101	12	7342	-12.44	48.59	-0.48
43	SLU 66	-81	10	7036	-7.14	36.33	-0.62
43	SLU 67	28	11	7300	-10.41	44.24	-0.54
43	SLU 68	106	12	7428	-12.53	49.52	-0.49
43	SLU 69	-76	10	7122	-7.23	37.26	-0.63
43	SLU 70	33	11	7386	-10.51	45.17	-0.55
43	SLU 71	-70	10	7076	-7.17	37.27	-0.62
43	SLU 72	39	11	7339	-10.44	45.18	-0.55
43	SLU 73	115	13	7977	-13	52.81	-0.54
43	SLU 74	-67	11	7671	-7.7	40.55	-0.68
43	SLU 75	41	12	7934	-10.97	48.46	-0.6
43	SLU 76	120	13	8063	-13.09	53.74	-0.55
43	SLU 77	-62	11	7757	-7.79	41.48	-0.68
43	SLU 78	47	12	8020	-11.06	49.39	-0.61
43	SLU 79	-56	11	7710	-7.73	41.49	-0.68
43	SLU 80	53	12	7974	-11	49.4	-0.61
43	SLU 81	-61	11	7810	-7.79	41.44	-0.69
43	SLU 82	48	12	8073	-11.06	49.35	-0.61
43	SLU 83	-55	11	7896	-7.88	42.37	-0.7
43	SLU 84	53	12	8159	-11.15	50.28	-0.62
43	SLE RA 1	-63	7	5181	-5.25	26.46	-0.45
43	SLE RA 2	58	9	5474	-8.89	35.25	-0.37
43	SLE RA 3	-63	7	5270	-5.36	27.08	-0.46
43	SLE RA 4	10	8	5445	-7.54	32.35	-0.41
43	SLE RA 5	62	9	5531	-8.95	35.87	-0.38
43	SLE RA 6	-60	7	5327	-5.42	27.69	-0.47
43	SLE RA 7	13	8	5503	-7.6	32.97	-0.42
43	SLE RA 8	-55	7	5296	-5.37	27.7	-0.47
43	SLE RA 9	17	8	5471	-7.55	32.97	-0.42
43	SLE RA 10	68	9	5897	-9.26	38.07	-0.41
43	SLE RA 11	-54	8	5693	-5.73	29.89	-0.5
43	SLE RA 12	19	9	5868	-7.91	35.16	-0.45
43	SLE RA 13	71	9	5954	-9.32	38.68	-0.42
43	SLE RA 14	-50	8	5750	-5.79	30.51	-0.51
43	SLE RA 15	22	9	5926	-7.97	35.78	-0.46
43	SLE RA 16	-46	8	5719	-5.75	30.52	-0.5
43	SLE RA 17	26	9	5894	-7.93	35.79	-0.45
43	SLE RA 18	-49	8	5785	-5.78	30.48	-0.51
43	SLE RA 19	23	9	5961	-7.97	35.76	-0.46
43	SLE RA 20	-46	8	5843	-5.85	31.1	-0.51
43	SLE RA 21	27	9	6018	-8.03	36.38	-0.47
43	SLE FR 1	-63	7	5181	-5.25	26.46	-0.45
43	SLE FR 2	-38	8	5239	-5.98	28.22	-0.44

Nodo	Cont.	Reazione a traslazione			Reazione a rotazione		
Ind.	N.br.	x	y	z	x	y	z
43	SLE FR 3	-61	7	5204	-5.28	26.71	-0.46
43	SLE FR 4	-34	8	5421	-6.14	29.43	-0.45
43	SLE FR 5	-57	7	5385	-5.44	27.92	-0.47
43	SLE FR 6	-56	8	5483	-5.52	28.47	-0.48
43	SLE QP 1	-63	7	5181	-5.25	26.46	-0.45
43	SLE QP 2	-59	7	5362	-5.41	27.67	-0.47
43	SLD 1	475	15	7689	-11.44	82.71	-0.86
43	SLD 2	475	15	7689	-11.44	82.71	-0.86
43	SLD 3	718	11	6619	-5.27	73.57	-0.71
43	SLD 4	718	11	6619	-5.27	73.57	-0.71
43	SLD 5	-268	16	7683	-16.58	58.04	-0.81
43	SLD 6	-268	16	7683	-16.58	58.04	-0.81
43	SLD 7	544	2	4117	3.99	27.58	-0.32
43	SLD 8	544	2	4117	3.99	27.58	-0.32
43	SLD 9	-661	12	6608	-14.82	27.76	-0.62
43	SLD 10	-661	12	6608	-14.82	27.76	-0.62
43	SLD 11	151	-1	3042	5.76	-2.7	-0.14
43	SLD 12	151	-1	3042	5.76	-2.7	-0.14
43	SLD 13	-836	4	4105	-5.56	-18.23	-0.23
43	SLD 14	-836	4	4105	-5.56	-18.23	-0.23
43	SLD 15	-592	0	3035	0.62	-27.37	-0.09
43	SLD 16	-592	0	3035	0.62	-27.37	-0.09
43	SLV 1	1142	25	10761	-20.2	154.22	-1.39
43	SLV 2	1142	25	10761	-20.2	154.22	-1.39
43	SLV 3	1725	15	8257	-5.01	131.18	-1.03
43	SLV 4	1725	15	8257	-5.01	131.18	-1.03
43	SLV 5	-583	27	10780	-32.89	100.59	-1.29
43	SLV 6	-583	27	10780	-32.89	100.59	-1.29
43	SLV 7	1361	-4	2433	17.76	23.76	-0.09
43	SLV 8	1361	-4	2433	17.76	23.76	-0.09
43	SLV 9	-1479	19	8291	-28.58	31.57	-0.85
43	SLV 10	-1479	19	8291	-28.58	31.57	-0.85
43	SLV 11	466	-12	-55	22.07	-45.26	0.35
43	SLV 12	466	-12	-55	22.07	-45.26	0.35
43	SLV 13	-1842	0	2467	-5.82	-75.84	0.08
43	SLV 14	-1842	0	2467	-5.82	-75.84	0.08
43	SLV 15	-1259	-10	-37	9.38	-98.89	0.45
43	SLV 16	-1259	-10	-37	9.38	-98.89	0.45
44	SLU 1	-174	9	4236	-6.69	8.33	0.76
44	SLU 2	5	14	4568	-16.22	20.41	1.62
44	SLU 3	-177	10	4339	-6.91	8.83	0.79
44	SLU 4	-69	12	4538	-12.63	16.08	1.31
44	SLU 5	10	14	4634	-16.35	21.12	1.64
44	SLU 6	-172	10	4405	-7.04	9.53	0.8
44	SLU 7	-65	12	4604	-12.76	16.79	1.32
44	SLU 8	-165	10	4368	-6.95	9.74	0.8
44	SLU 9	-57	12	4567	-12.67	16.99	1.31
44	SLU 10	3	15	5110	-16.94	22.5	1.71
44	SLU 11	-178	11	4881	-7.62	10.91	0.87
44	SLU 12	-71	13	5080	-13.34	18.16	1.39
44	SLU 13	8	15	5176	-17.07	23.2	1.72
44	SLU 14	-174	11	4947	-7.75	11.61	0.89
44	SLU 15	-66	13	5146	-13.47	18.87	1.4
44	SLU 16	-166	11	4910	-7.67	11.82	0.88
44	SLU 17	-59	13	5109	-13.39	19.07	1.39
44	SLU 18	-176	11	5010	-7.71	11.3	0.88
44	SLU 19	-69	13	5209	-13.43	18.55	1.4
44	SLU 20	-172	11	5076	-7.84	12	0.9
44	SLU 21	-64	14	5275	-13.56	19.26	1.42
44	SLU 22	-185	10	4730	-7.42	9.84	0.85
44	SLU 23	-6	15	5062	-16.96	21.93	1.71
44	SLU 24	-188	11	4833	-7.64	10.34	0.87
44	SLU 25	-80	13	5032	-13.36	17.59	1.39
44	SLU 26	-2	15	5128	-17.09	22.63	1.72
44	SLU 27	-183	11	4899	-7.77	11.05	0.89
44	SLU 28	-76	13	5098	-13.49	18.3	1.41
44	SLU 29	-176	11	4862	-7.68	11.25	0.88
44	SLU 30	-69	13	5061	-13.4	18.51	1.4
44	SLU 31	-8	16	5604	-17.67	24.01	1.79
44	SLU 32	-189	12	5375	-8.35	12.42	0.96
44	SLU 33	-82	14	5574	-14.07	19.68	1.47
44	SLU 34	-3	16	5670	-17.8	24.72	1.81
44	SLU 35	-185	12	5441	-8.48	13.13	0.97
44	SLU 36	-77	15	5640	-14.2	20.38	1.49
44	SLU 37	-178	12	5404	-8.4	13.33	0.96
44	SLU 38	-70	14	5603	-14.12	20.59	1.48
44	SLU 39	-188	12	5504	-8.45	12.81	0.97
44	SLU 40	-80	15	5703	-14.16	20.07	1.48
44	SLU 41	-183	12	5570	-8.58	13.52	0.98
44	SLU 42	-76	15	5769	-14.3	20.77	1.5
44	SLU 43	-222	12	5337	-8.45	10.3	0.96
44	SLU 44	-43	16	5669	-17.98	22.39	1.82
44	SLU 45	-225	12	5440	-8.66	10.81	0.99
44	SLU 46	-117	15	5640	-14.38	18.06	1.51
44	SLU 47	-39	16	5735	-18.11	23.1	1.84
44	SLU 48	-220	12	5506	-8.79	11.51	1
44	SLU 49	-113	15	5706	-14.51	18.77	1.52
44	SLU 50	-213	12	5469	-8.71	11.72	1
44	SLU 51	-106	15	5668	-14.43	18.97	1.51
44	SLU 52	-45	17	6211	-18.7	24.47	1.91
44	SLU 53	-227	13	5982	-9.38	12.89	1.07

Nodo	Cont.	Reazione a traslazione			Reazione a rotazione		
Ind.	N.br.	x	y	z	x	y	z
44	SLU 54	-119	16	6181	-15.1	20.14	1.59
44	SLU 55	-40	17	6277	-18.83	25.18	1.92
44	SLU 56	-222	13	6048	-9.51	13.59	1.09
44	SLU 57	-114	16	6248	-15.23	20.85	1.6
44	SLU 58	-215	13	6011	-9.42	13.8	1.08
44	SLU 59	-107	16	6210	-15.14	21.05	1.59
44	SLU 60	-225	13	6111	-9.47	13.28	1.08
44	SLU 61	-117	16	6310	-15.19	20.53	1.6
44	SLU 62	-220	13	6177	-9.6	13.98	1.1
44	SLU 63	-113	16	6377	-15.32	21.24	1.62
44	SLU 64	-234	13	5831	-9.18	11.82	1.05
44	SLU 65	-55	17	6163	-18.71	23.91	1.91
44	SLU 66	-236	13	5934	-9.39	12.32	1.07
44	SLU 67	-129	16	6134	-15.11	19.57	1.59
44	SLU 68	-50	17	6229	-18.84	24.61	1.92
44	SLU 69	-232	13	6000	-9.52	13.03	1.09
44	SLU 70	-124	16	6200	-15.24	20.28	1.61
44	SLU 71	-224	13	5963	-9.44	13.23	1.08
44	SLU 72	-117	16	6162	-15.16	20.48	1.6
44	SLU 73	-56	18	6705	-19.43	25.99	1.99
44	SLU 74	-238	14	6476	-10.11	14.4	1.16
44	SLU 75	-130	17	6676	-15.83	21.65	1.67
44	SLU 76	-52	18	6771	-19.56	26.69	2.01
44	SLU 77	-233	14	6542	-10.24	15.11	1.17
44	SLU 78	-126	17	6742	-15.96	22.36	1.69
44	SLU 79	-226	14	6505	-10.16	15.31	1.16
44	SLU 80	-119	17	6704	-15.88	22.57	1.68
44	SLU 81	-236	14	6605	-10.2	14.79	1.17
44	SLU 82	-128	17	6805	-15.92	22.04	1.68
44	SLU 83	-231	14	6671	-10.33	15.5	1.18
44	SLU 84	-124	17	6871	-16.05	22.75	1.7
44	SLE RA 1	-177	10	4377	-6.9	8.76	0.79
44	SLE RA 2	-58	12	4598	-13.26	16.82	1.36
44	SLE RA 3	-179	10	4446	-7.04	9.09	0.81
44	SLE RA 4	-107	11	4579	-10.86	13.93	1.15
44	SLE RA 5	-55	13	4642	-13.34	17.29	1.37
44	SLE RA 6	-176	10	4490	-7.13	9.56	0.82
44	SLE RA 7	-104	12	4623	-10.94	14.4	1.16
44	SLE RA 8	-171	10	4465	-7.07	9.7	0.81
44	SLE RA 9	-99	12	4598	-10.89	14.54	1.15
44	SLE RA 10	-59	13	4960	-13.73	18.2	1.42
44	SLE RA 11	-180	10	4807	-7.52	10.48	0.86
44	SLE RA 12	-108	12	4940	-11.33	15.32	1.2
44	SLE RA 13	-56	13	5004	-13.82	18.68	1.43
44	SLE RA 14	-177	11	4851	-7.61	10.95	0.87
44	SLE RA 15	-105	12	4984	-11.42	15.79	1.22
44	SLE RA 16	-172	11	4826	-7.55	11.09	0.86
44	SLE RA 17	-101	12	4959	-11.36	15.92	1.21
44	SLE RA 18	-179	11	4893	-7.58	10.74	0.87
44	SLE RA 19	-107	12	5026	-11.39	15.58	1.21
44	SLE RA 20	-176	11	4937	-7.67	11.21	0.88
44	SLE RA 21	-104	12	5070	-11.48	16.05	1.22
44	SLE FR 1	-177	10	4377	-6.9	8.76	0.79
44	SLE FR 2	-153	10	4421	-8.17	10.37	0.9
44	SLE FR 3	-176	10	4394	-6.94	8.95	0.79
44	SLE FR 4	-154	10	4576	-8.38	10.96	0.93
44	SLE FR 5	-176	10	4549	-7.14	9.54	0.82
44	SLE FR 6	-178	10	4635	-7.24	9.75	0.83
44	SLE QP 1	-177	10	4377	-6.9	8.76	0.79
44	SLE QP 2	-178	10	4532	-7.1	9.35	0.81
44	SLD 1	464	19	6167	-17.3	65.98	1.92
44	SLD 2	464	19	6167	-17.3	65.98	1.92
44	SLD 3	673	13	5391	-6.61	56.04	0.91
44	SLD 4	673	13	5391	-6.61	56.04	0.91
44	SLD 5	-301	21	6198	-26.39	41.41	2.67
44	SLD 6	-301	21	6198	-26.39	41.41	2.67
44	SLD 7	394	2	3614	9.27	8.29	-0.68
44	SLD 8	394	2	3614	9.27	8.29	-0.68
44	SLD 9	-749	18	5450	-23.48	10.42	2.31
44	SLD 10	-749	18	5450	-23.48	10.42	2.31
44	SLD 11	-54	-2	2865	12.18	-22.71	-1.04
44	SLD 12	-54	-2	2865	12.18	-22.71	-1.04
44	SLD 13	-1028	7	3672	-7.6	-37.34	0.71
44	SLD 14	-1028	7	3672	-7.6	-37.34	0.71
44	SLD 15	-820	1	2897	3.09	-47.28	-0.29
44	SLD 16	-820	1	2897	3.09	-47.28	-0.29
44	SLV 1	1272	32	8330	-32.28	139.33	3.5
44	SLV 2	1272	32	8330	-32.28	139.33	3.5
44	SLV 3	1771	18	6516	-5.74	114.67	1.01
44	SLV 4	1771	18	6516	-5.74	114.67	1.01
44	SLV 5	-500	38	8422	-54.9	85.74	5.4
44	SLV 6	-500	38	8422	-54.9	85.74	5.4
44	SLV 7	1164	-9	2377	33.55	3.55	-2.91
44	SLV 8	1164	-9	2377	33.55	3.55	-2.91
44	SLV 9	-1520	29	6687	-47.76	15.16	4.53
44	SLV 10	-1520	29	6687	-47.76	15.16	4.53
44	SLV 11	145	-18	642	40.69	-67.04	-3.77
44	SLV 12	145	-18	642	40.69	-67.04	-3.77
44	SLV 13	-2126	2	2547	-8.47	-95.96	0.62
44	SLV 14	-2126	2	2547	-8.47	-95.96	0.62
44	SLV 15	-1627	-12	733	18.07	-120.62	-1.88

Nodo	Cont.	Reazione a traslazione			Reazione a rotazione		
Ind.	N.br.	x	y	z	x	y	z
44	SLV 16	-1627	-12	733	18.07	-120.62	-1.88
45	SLU 1	-90	16	3657	-8.84	3.02	0.39
45	SLU 2	78	26	3924	-22.51	12.6	0.59
45	SLU 3	-87	17	3738	-9.13	3.41	0.41
45	SLU 4	14	22	3898	-17.33	9.16	0.52
45	SLU 5	86	26	3975	-22.68	13.19	0.6
45	SLU 6	-78	17	3789	-9.31	4	0.41
45	SLU 7	22	23	3949	-17.5	9.75	0.53
45	SLU 8	-73	17	3759	-9.2	4.21	0.41
45	SLU 9	28	23	3919	-17.39	9.95	0.53
45	SLU 10	80	28	4402	-23.43	13.75	0.63
45	SLU 11	-85	19	4216	-10.06	4.56	0.45
45	SLU 12	15	24	4376	-18.26	10.31	0.57
45	SLU 13	88	28	4453	-23.61	14.35	0.64
45	SLU 14	-76	19	4267	-10.24	5.15	0.46
45	SLU 15	24	25	4427	-18.43	10.9	0.58
45	SLU 16	-71	19	4237	-10.12	5.36	0.45
45	SLU 17	30	24	4397	-18.32	11.11	0.57
45	SLU 18	-87	19	4339	-10.17	4.67	0.46
45	SLU 19	13	25	4500	-18.37	10.42	0.57
45	SLU 20	-78	19	4390	-10.35	5.26	0.46
45	SLU 21	22	25	4551	-18.54	11.01	0.58
45	SLU 22	-95	18	4084	-9.8	3.79	0.44
45	SLU 23	73	28	4351	-23.46	13.37	0.63
45	SLU 24	-92	19	4165	-10.09	4.18	0.45
45	SLU 25	9	24	4325	-18.29	9.93	0.57
45	SLU 26	82	28	4402	-23.64	13.97	0.64
45	SLU 27	-83	19	4216	-10.27	4.77	0.46
45	SLU 28	18	25	4376	-18.46	10.52	0.58
45	SLU 29	-77	19	4186	-10.16	4.98	0.45
45	SLU 30	24	24	4346	-18.35	10.73	0.57
45	SLU 31	75	29	4829	-24.39	14.53	0.68
45	SLU 32	-90	21	4643	-11.02	5.33	0.49
45	SLU 33	11	26	4803	-19.21	11.08	0.61
45	SLU 34	84	30	4880	-24.57	15.12	0.69
45	SLU 35	-81	21	4694	-11.19	5.93	0.5
45	SLU 36	20	26	4854	-19.39	11.67	0.62
45	SLU 37	-75	21	4664	-11.08	6.13	0.5
45	SLU 38	26	26	4824	-19.28	11.88	0.62
45	SLU 39	-92	21	4767	-11.13	5.44	0.5
45	SLU 40	9	26	4927	-19.32	11.19	0.62
45	SLU 41	-83	21	4818	-11.3	6.03	0.51
45	SLU 42	18	27	4978	-19.5	11.78	0.63
45	SLU 43	-116	20	4607	-11.17	3.66	0.5
45	SLU 44	52	30	4874	-24.83	13.24	0.69
45	SLU 45	-113	21	4688	-11.46	4.05	0.51
45	SLU 46	-12	27	4848	-19.65	9.8	0.63
45	SLU 47	61	30	4925	-25.01	13.84	0.7
45	SLU 48	-104	21	4739	-11.63	4.64	0.52
45	SLU 49	-3	27	4899	-19.83	10.39	0.63
45	SLU 50	-98	21	4709	-11.52	4.85	0.51
45	SLU 51	3	27	4869	-19.72	10.6	0.63
45	SLU 52	54	32	5352	-25.76	14.4	0.74
45	SLU 53	-111	23	5166	-12.38	5.2	0.55
45	SLU 54	-10	29	5326	-20.58	10.95	0.67
45	SLU 55	63	32	5403	-25.93	14.99	0.74
45	SLU 56	-102	23	5217	-12.56	5.8	0.56
45	SLU 57	-1	29	5377	-20.76	11.54	0.68
45	SLU 58	-96	23	5187	-12.45	6	0.56
45	SLU 59	5	29	5347	-20.65	11.75	0.67
45	SLU 60	-113	23	5290	-12.49	5.31	0.56
45	SLU 61	-12	29	5450	-20.69	11.06	0.68
45	SLU 62	-104	23	5341	-12.67	5.9	0.57
45	SLU 63	-3	29	5501	-20.87	11.65	0.68
45	SLU 64	-120	22	5035	-12.13	4.44	0.54
45	SLU 65	48	32	5302	-25.79	14.02	0.74
45	SLU 66	-117	23	5116	-12.41	4.82	0.55
45	SLU 67	-16	29	5276	-20.61	10.57	0.67
45	SLU 68	56	32	5353	-25.96	14.61	0.74
45	SLU 69	-108	23	5167	-12.59	5.42	0.56
45	SLU 70	-8	29	5327	-20.79	11.16	0.68
45	SLU 71	-102	23	5137	-12.48	5.62	0.56
45	SLU 72	-2	29	5297	-20.68	11.37	0.67
45	SLU 73	50	34	5779	-26.72	15.17	0.78
45	SLU 74	-115	25	5593	-13.34	5.98	0.6
45	SLU 75	-15	30	5754	-21.54	11.72	0.72
45	SLU 76	58	34	5830	-26.89	15.76	0.79
45	SLU 77	-106	25	5644	-13.52	6.57	0.6
45	SLU 78	-6	31	5805	-21.72	12.32	0.72
45	SLU 79	-101	25	5615	-13.41	6.77	0.6
45	SLU 80	0	31	5775	-21.6	12.52	0.72
45	SLU 81	-117	25	5717	-13.45	6.08	0.6
45	SLU 82	-17	31	5877	-21.65	11.83	0.72
45	SLU 83	-108	25	5768	-13.63	6.67	0.61
45	SLU 84	-8	31	5928	-21.83	12.42	0.73
45	SLE RA 1	-91	17	3779	-9.12	3.24	0.41
45	SLE RA 2	20	23	3957	-18.23	9.63	0.54
45	SLE RA 3	-89	17	3833	-9.31	3.5	0.41
45	SLE RA 4	-22	21	3940	-14.77	7.33	0.49
45	SLE RA 5	26	23	3991	-18.34	10.02	0.54
45	SLE RA 6	-84	17	3867	-9.43	3.9	0.42

Nodo	Cont.	Reazione a traslazione			Reazione a rotazione		
Ind.	N.br.	x	y	z	x	y	z
45	SLE RA 7	-16	21	3974	-14.89	7.73	0.5
45	SLE RA 8	-80	17	3847	-9.35	4.03	0.42
45	SLE RA 9	-13	21	3954	-14.82	7.86	0.49
45	SLE RA 10	22	24	4275	-18.84	10.4	0.57
45	SLE RA 11	-88	18	4151	-9.93	4.27	0.44
45	SLE RA 12	-21	22	4258	-15.39	8.1	0.52
45	SLE RA 13	28	25	4309	-18.96	10.79	0.57
45	SLE RA 14	-82	19	4185	-10.05	4.66	0.45
45	SLE RA 15	-15	22	4292	-15.51	8.5	0.53
45	SLE RA 16	-78	18	4165	-9.97	4.8	0.45
45	SLE RA 17	-11	22	4272	-15.44	8.63	0.52
45	SLE RA 18	-90	19	4234	-10	4.34	0.45
45	SLE RA 19	-22	22	4341	-15.47	8.17	0.53
45	SLE RA 20	-84	19	4268	-10.12	4.74	0.45
45	SLE RA 21	-17	23	4375	-15.58	8.57	0.53
45	SLE FR 1	-91	17	3779	-9.12	3.24	0.41
45	SLE FR 2	-69	18	3815	-10.94	4.52	0.43
45	SLE FR 3	-89	17	3793	-9.16	3.4	0.41
45	SLE FR 4	-69	19	3951	-11.2	4.85	0.44
45	SLE FR 5	-89	17	3929	-9.43	3.73	0.42
45	SLE FR 6	-91	18	4006	-9.56	3.79	0.43
45	SLE QP 1	-91	17	3779	-9.12	3.24	0.41
45	SLE QP 2	-91	17	3915	-9.38	3.57	0.42
45	SLD 1	726	31	5044	-24.14	53.89	0.71
45	SLD 2	726	31	5044	-24.14	53.89	0.71
45	SLD 3	879	18	4472	-8.7	46.23	0.43
45	SLD 4	879	18	4472	-8.7	46.23	0.43
45	SLD 5	-77	40	5121	-37.23	30.28	0.93
45	SLD 6	-77	40	5121	-37.23	30.28	0.93
45	SLD 7	431	-1	3215	14.24	4.75	0
45	SLD 8	431	-1	3215	14.24	4.75	0
45	SLD 9	-613	36	4616	-33.01	2.39	0.84
45	SLD 10	-613	36	4616	-33.01	2.39	0.84
45	SLD 11	-105	-5	2710	18.46	-23.14	-0.09
45	SLD 12	-105	-5	2710	18.46	-23.14	-0.09
45	SLD 13	-1061	16	3359	-10.07	-39.09	0.41
45	SLD 14	-1061	16	3359	-10.07	-39.09	0.41
45	SLD 15	-908	4	2787	5.38	-46.75	0.13
45	SLD 16	-908	4	2787	5.38	-46.75	0.13
45	SLV 1	1756	50	6542	-45.76	118.94	1.12
45	SLV 2	1756	50	6542	-45.76	118.94	1.12
45	SLV 3	2129	20	5204	-7.39	99.89	0.44
45	SLV 4	2129	20	5204	-7.39	99.89	0.44
45	SLV 5	-102	73	6732	-78.49	67.07	1.67
45	SLV 6	-102	73	6732	-78.49	67.07	1.67
45	SLV 7	1140	-28	2273	49.41	3.58	-0.62
45	SLV 8	1140	-28	2273	49.41	3.58	-0.62
45	SLV 9	-1322	63	5558	-68.17	3.57	1.46
45	SLV 10	-1322	63	5558	-68.17	3.57	1.46
45	SLV 11	-80	-38	1099	59.72	-59.93	-0.84
45	SLV 12	-80	-38	1099	59.72	-59.93	-0.84
45	SLV 13	-2311	15	2627	-11.37	-92.75	0.4
45	SLV 14	-2311	15	2627	-11.37	-92.75	0.4
45	SLV 15	-1938	-15	1289	26.99	-111.8	-0.29
45	SLV 16	-1938	-15	1289	26.99	-111.8	-0.29
46	SLU 1	-64	21	3185	-10.89	2.05	-0.45
46	SLU 2	97	35	3397	-29.94	9.88	-0.7
46	SLU 3	-59	21	3248	-11.25	2.49	-0.47
46	SLU 4	38	30	3376	-22.68	7.19	-0.62
46	SLU 5	107	35	3437	-30.16	10.51	-0.71
46	SLU 6	-48	22	3288	-11.47	3.13	-0.48
46	SLU 7	48	30	3416	-22.9	7.82	-0.63
46	SLU 8	-43	21	3264	-11.34	3.32	-0.47
46	SLU 9	53	30	3392	-22.77	8.02	-0.62
46	SLU 10	100	37	3819	-31.05	10.6	-0.75
46	SLU 11	-55	24	3669	-12.36	3.21	-0.52
46	SLU 12	41	32	3797	-23.79	7.91	-0.67
46	SLU 13	111	38	3858	-31.28	11.23	-0.76
46	SLU 14	-45	24	3709	-12.58	3.85	-0.53
46	SLU 15	52	33	3837	-24.01	8.54	-0.68
46	SLU 16	-40	24	3685	-12.45	4.04	-0.53
46	SLU 17	57	32	3813	-23.88	8.74	-0.67
46	SLU 18	-59	24	3786	-12.48	3.08	-0.53
46	SLU 19	38	33	3914	-23.91	7.78	-0.68
46	SLU 20	-48	24	3826	-12.7	3.72	-0.54
46	SLU 21	48	33	3954	-24.13	8.41	-0.69
46	SLU 22	-66	23	3555	-12.05	2.54	-0.51
46	SLU 23	95	37	3768	-31.1	10.36	-0.75
46	SLU 24	-61	24	3619	-12.41	2.98	-0.52
46	SLU 25	36	32	3746	-23.84	7.67	-0.67
46	SLU 26	105	38	3807	-31.32	11	-0.76
46	SLU 27	-50	24	3658	-12.63	3.61	-0.53
46	SLU 28	46	33	3786	-24.06	8.31	-0.68
46	SLU 29	-45	24	3634	-12.49	3.81	-0.53
46	SLU 30	52	32	3762	-23.92	8.5	-0.67
46	SLU 31	99	40	4189	-32.21	11.08	-0.81
46	SLU 32	-57	26	4040	-13.52	3.7	-0.58
46	SLU 33	39	35	4167	-24.95	8.39	-0.72
46	SLU 34	109	40	4228	-32.43	11.72	-0.82
46	SLU 35	-47	26	4079	-13.74	4.33	-0.58
46	SLU 36	50	35	4207	-25.17	9.03	-0.73

Nodo	Cont.	Reazione a traslazione			Reazione a rotazione		
Ind.	N.br.	x	y	z	x	y	z
46	SLU 37	-41	26	4055	-13.61	4.53	-0.58
46	SLU 38	55	35	4183	-25.04	9.22	-0.73
46	SLU 39	-61	26	4156	-13.64	3.57	-0.58
46	SLU 40	36	35	4284	-25.07	8.26	-0.73
46	SLU 41	-50	27	4196	-13.86	4.2	-0.59
46	SLU 42	46	35	4324	-25.29	8.9	-0.74
46	SLU 43	-83	26	4013	-13.76	2.5	-0.57
46	SLU 44	78	40	4226	-32.81	10.33	-0.82
46	SLU 45	-77	27	4077	-14.12	2.94	-0.59
46	SLU 46	19	35	4205	-25.55	7.64	-0.73
46	SLU 47	89	41	4266	-33.03	10.96	-0.83
46	SLU 48	-67	27	4117	-14.34	3.58	-0.6
46	SLU 49	29	36	4244	-25.77	8.27	-0.74
46	SLU 50	-62	27	4092	-14.21	3.77	-0.59
46	SLU 51	35	35	4220	-25.64	8.47	-0.74
46	SLU 52	82	43	4647	-33.93	11.05	-0.87
46	SLU 53	-74	29	4498	-15.23	3.66	-0.64
46	SLU 54	23	38	4626	-26.66	8.36	-0.79
46	SLU 55	92	43	4687	-34.15	11.68	-0.88
46	SLU 56	-63	29	4538	-15.45	4.3	-0.65
46	SLU 57	33	38	4665	-26.88	8.99	-0.8
46	SLU 58	-58	29	4513	-15.32	4.49	-0.64
46	SLU 59	38	38	4641	-26.75	9.19	-0.79
46	SLU 60	-77	29	4614	-15.35	3.53	-0.65
46	SLU 61	19	38	4742	-26.78	8.23	-0.8
46	SLU 62	-67	30	4654	-15.57	4.17	-0.66
46	SLU 63	29	38	4782	-27	8.86	-0.81
46	SLU 64	-84	28	4383	-14.92	2.99	-0.63
46	SLU 65	77	43	4596	-33.97	10.81	-0.87
46	SLU 66	-79	29	4447	-15.28	3.43	-0.64
46	SLU 67	17	38	4575	-26.71	8.12	-0.79
46	SLU 68	87	43	4636	-34.19	11.45	-0.88
46	SLU 69	-69	29	4487	-15.5	4.06	-0.65
46	SLU 70	28	38	4615	-26.93	8.76	-0.8
46	SLU 71	-63	29	4463	-15.36	4.26	-0.64
46	SLU 72	33	38	4590	-26.79	8.95	-0.79
46	SLU 73	80	45	5017	-35.08	11.53	-0.93
46	SLU 74	-76	31	4868	-16.39	4.15	-0.69
46	SLU 75	21	40	4996	-27.82	8.84	-0.84
46	SLU 76	90	45	5057	-35.3	12.17	-0.94
46	SLU 77	-65	32	4908	-16.61	4.78	-0.7
46	SLU 78	31	40	5036	-28.04	9.48	-0.85
46	SLU 79	-60	32	4884	-16.48	4.98	-0.7
46	SLU 80	37	40	5011	-27.91	9.67	-0.85
46	SLU 81	-79	32	4985	-16.51	4.02	-0.7
46	SLU 82	17	40	5113	-27.94	8.71	-0.85
46	SLU 83	-69	32	5024	-16.73	4.65	-0.71
46	SLU 84	28	41	5152	-28.16	9.35	-0.86
46	SLE RA 1	-64	21	3290	-11.22	2.19	-0.47
46	SLE RA 2	43	31	3432	-23.92	7.41	-0.63
46	SLE RA 3	-61	22	3333	-11.46	2.49	-0.48
46	SLE RA 4	3	27	3418	-19.08	5.62	-0.58
46	SLE RA 5	50	31	3459	-24.07	7.83	-0.64
46	SLE RA 6	-54	22	3359	-11.61	2.91	-0.49
46	SLE RA 7	10	28	3445	-19.23	6.04	-0.58
46	SLE RA 8	-51	22	3343	-11.52	3.04	-0.48
46	SLE RA 9	14	28	3428	-19.14	6.17	-0.58
46	SLE RA 10	45	32	3713	-24.66	7.89	-0.67
46	SLE RA 11	-59	23	3614	-12.2	2.97	-0.52
46	SLE RA 12	6	29	3699	-19.82	6.09	-0.61
46	SLE RA 13	52	33	3739	-24.81	8.31	-0.68
46	SLE RA 14	-52	24	3640	-12.35	3.39	-0.52
46	SLE RA 15	13	29	3725	-19.97	6.52	-0.62
46	SLE RA 16	-48	23	3624	-12.26	3.52	-0.52
46	SLE RA 17	16	29	3709	-19.88	6.65	-0.62
46	SLE RA 18	-61	24	3691	-12.28	2.88	-0.52
46	SLE RA 19	3	29	3777	-19.9	6.01	-0.62
46	SLE RA 20	-54	24	3718	-12.43	3.3	-0.53
46	SLE RA 21	10	30	3803	-20.05	6.43	-0.63
46	SLE FR 1	-64	21	3290	-11.22	2.19	-0.47
46	SLE FR 2	-43	23	3319	-13.76	3.24	-0.5
46	SLE FR 3	-62	21	3301	-11.28	2.36	-0.47
46	SLE FR 4	-42	24	3439	-14.08	3.44	-0.52
46	SLE FR 5	-61	22	3421	-11.6	2.57	-0.49
46	SLE FR 6	-63	22	3491	-11.75	2.53	-0.5
46	SLE QP 1	-64	21	3290	-11.22	2.19	-0.47
46	SLE QP 2	-63	22	3411	-11.54	2.4	-0.49
46	SLD 1	808	42	4192	-32.23	53.81	-0.82
46	SLD 2	808	42	4192	-32.23	53.81	-0.82
46	SLD 3	948	23	3750	-10.58	47.43	-0.49
46	SLD 4	948	23	3750	-10.58	47.43	-0.49
46	SLD 5	-14	56	4316	-50.59	27.5	-1.09
46	SLD 6	-14	56	4316	-50.59	27.5	-1.09
46	SLD 7	452	-5	2841	21.58	6.23	0.02
46	SLD 8	452	-5	2841	21.58	6.23	0.02
46	SLD 9	-579	49	3980	-44.67	-1.43	-0.99
46	SLD 10	-579	49	3980	-44.67	-1.43	-0.99
46	SLD 11	-113	-12	2505	27.5	-22.7	0.12
46	SLD 12	-113	-12	2505	27.5	-22.7	0.12
46	SLD 13	-1075	21	3072	-12.5	-42.63	-0.48
46	SLD 14	-1075	21	3072	-12.5	-42.63	-0.48

Nodo	Cont.	Reazione a traslazione			Reazione a rotazione		
Ind.	N.br.	x	y	z	x	y	z
46	SLD 15	-935	2	2629	9.15	-49.01	-0.15
46	SLD 16	-935	2	2629	9.15	-49.01	-0.15
46	SLV 1	1907	70	5233	-62.49	120.15	-1.31
46	SLV 2	1907	70	5233	-62.49	120.15	-1.31
46	SLV 3	2251	25	4195	-8.62	104.23	-0.48
46	SLV 4	2251	25	4195	-8.62	104.23	-0.48
46	SLV 5	7	105	5533	-108.54	61.87	-1.98
46	SLV 6	7	105	5533	-108.54	61.87	-1.98
46	SLV 7	1152	-46	2071	71.04	8.8	0.76
46	SLV 8	1152	-46	2071	71.04	8.8	0.76
46	SLV 9	-1279	90	4751	-94.12	-4.01	-1.73
46	SLV 10	-1279	90	4751	-94.12	-4.01	-1.73
46	SLV 11	-134	-61	1289	85.45	-57.08	1.01
46	SLV 12	-134	-61	1289	85.45	-57.08	1.01
46	SLV 13	-2378	19	2626	-14.46	-99.44	-0.49
46	SLV 14	-2378	19	2626	-14.46	-99.44	-0.49
46	SLV 15	-2034	-26	1588	39.41	-115.36	0.34
46	SLV 16	-2034	-26	1588	39.41	-115.36	0.34
47	SLU 1	5	19	2805	-11.44	2.56	0.34
47	SLU 2	132	38	2970	-33.62	9.51	0.71
47	SLU 3	14	20	2856	-11.81	3.08	0.35
47	SLU 4	91	31	2955	-25.12	7.25	0.57
47	SLU 5	146	38	3002	-33.86	10.22	0.72
47	SLU 6	28	20	2887	-12.05	3.79	0.36
47	SLU 7	105	31	2986	-25.36	7.96	0.58
47	SLU 8	33	20	2868	-11.91	3.97	0.35
47	SLU 9	109	31	2967	-25.22	8.15	0.57
47	SLU 10	138	40	3344	-34.77	10.22	0.75
47	SLU 11	20	22	3229	-12.96	3.79	0.39
47	SLU 12	97	33	3328	-26.27	7.96	0.61
47	SLU 13	152	40	3375	-35	10.93	0.75
47	SLU 14	34	22	3261	-13.19	4.5	0.4
47	SLU 15	111	33	3360	-26.5	8.67	0.62
47	SLU 16	39	22	3242	-13.05	4.68	0.39
47	SLU 17	115	33	3341	-26.36	8.86	0.61
47	SLU 18	13	22	3339	-13.07	3.57	0.39
47	SLU 19	90	33	3438	-26.38	7.74	0.62
47	SLU 20	27	23	3370	-13.31	4.28	0.4
47	SLU 21	104	34	3469	-26.62	8.45	0.62
47	SLU 22	8	21	3128	-12.64	3.08	0.38
47	SLU 23	135	40	3293	-34.82	10.04	0.75
47	SLU 24	17	22	3179	-13.01	3.6	0.39
47	SLU 25	94	33	3278	-26.32	7.77	0.61
47	SLU 26	149	40	3325	-35.05	10.74	0.75
47	SLU 27	31	22	3210	-13.25	4.31	0.4
47	SLU 28	108	33	3309	-26.55	8.48	0.62
47	SLU 29	36	22	3191	-13.11	4.49	0.39
47	SLU 30	112	33	3290	-26.41	8.67	0.61
47	SLU 31	141	42	3667	-35.96	10.74	0.78
47	SLU 32	24	24	3552	-14.16	4.31	0.43
47	SLU 33	100	35	3651	-27.46	8.48	0.65
47	SLU 34	155	42	3698	-36.2	11.45	0.79
47	SLU 35	38	24	3584	-14.39	5.02	0.43
47	SLU 36	114	36	3683	-27.7	9.19	0.65
47	SLU 37	42	24	3565	-14.25	5.2	0.43
47	SLU 38	118	35	3664	-27.56	9.38	0.65
47	SLU 39	17	24	3662	-14.27	4.09	0.43
47	SLU 40	93	35	3761	-27.58	8.27	0.65
47	SLU 41	31	25	3693	-14.51	4.8	0.44
47	SLU 42	107	36	3792	-27.81	8.97	0.66
47	SLU 43	5	24	3535	-14.46	3.15	0.43
47	SLU 44	132	43	3701	-36.64	10.1	0.8
47	SLU 45	15	25	3586	-14.84	3.67	0.44
47	SLU 46	91	36	3685	-28.14	7.84	0.66
47	SLU 47	146	43	3732	-36.88	10.81	0.8
47	SLU 48	28	25	3618	-15.07	4.38	0.45
47	SLU 49	105	36	3717	-28.38	8.55	0.67
47	SLU 50	33	25	3599	-14.93	4.56	0.44
47	SLU 51	109	36	3698	-28.24	8.74	0.66
47	SLU 52	138	45	4074	-37.79	10.81	0.84
47	SLU 53	21	27	3960	-15.98	4.38	0.48
47	SLU 54	97	38	4059	-29.29	8.55	0.7
47	SLU 55	152	45	4106	-38.02	11.52	0.84
47	SLU 56	35	27	3992	-16.22	5.08	0.48
47	SLU 57	111	38	4091	-29.52	9.26	0.71
47	SLU 58	39	27	3972	-16.07	5.27	0.48
47	SLU 59	115	38	4072	-29.38	9.44	0.7
47	SLU 60	14	27	4069	-16.1	4.16	0.48
47	SLU 61	90	38	4168	-29.4	8.33	0.7
47	SLU 62	28	28	4101	-16.33	4.87	0.49
47	SLU 63	104	39	4200	-29.64	9.04	0.71
47	SLU 64	8	26	3858	-15.66	3.67	0.47
47	SLU 65	135	45	4024	-37.84	10.62	0.84
47	SLU 66	18	27	3909	-16.03	4.19	0.48
47	SLU 67	94	38	4008	-29.34	8.36	0.7
47	SLU 68	149	45	4055	-38.07	11.33	0.84
47	SLU 69	32	27	3941	-16.27	4.9	0.49
47	SLU 70	108	38	4040	-29.58	9.07	0.71
47	SLU 71	36	27	3922	-16.13	5.08	0.48
47	SLU 72	112	38	4021	-29.44	9.26	0.7
47	SLU 73	142	47	4397	-38.98	11.33	0.87

Nodo	Cont.	Reazione a traslazione			Reazione a rotazione		
Ind.	N.br.	x	y	z	x	y	z
47	SLU 74	24	29	4283	-17.18	4.9	0.52
47	SLU 75	100	40	4382	-30.49	9.07	0.74
47	SLU 76	156	47	4429	-39.22	12.04	0.88
47	SLU 77	38	29	4315	-17.41	5.61	0.52
47	SLU 78	114	41	4414	-30.72	9.78	0.74
47	SLU 79	42	29	4295	-17.27	5.79	0.52
47	SLU 80	119	40	4395	-30.58	9.97	0.74
47	SLU 81	17	29	4392	-17.29	4.68	0.52
47	SLU 82	93	40	4491	-30.6	8.85	0.74
47	SLU 83	31	30	4424	-17.53	5.39	0.53
47	SLU 84	107	41	4523	-30.84	9.56	0.75
47	SLE RA 1	6	20	2897	-11.78	2.71	0.35
47	SLE RA 2	90	32	3007	-26.57	7.34	0.6
47	SLE RA 3	12	20	2931	-12.03	3.05	0.36
47	SLE RA 4	63	28	2997	-20.9	5.84	0.51
47	SLE RA 5	100	32	3028	-26.73	7.82	0.6
47	SLE RA 6	21	20	2952	-12.19	3.53	0.36
47	SLE RA 7	72	28	3018	-21.06	6.31	0.51
47	SLE RA 8	24	20	2939	-12.09	3.65	0.36
47	SLE RA 9	75	28	3005	-20.97	6.43	0.51
47	SLE RA 10	94	33	3256	-27.33	7.82	0.62
47	SLE RA 11	16	22	3180	-12.79	3.53	0.38
47	SLE RA 12	67	29	3246	-21.67	6.31	0.53
47	SLE RA 13	104	34	3277	-27.49	8.29	0.63
47	SLE RA 14	25	22	3201	-12.95	4	0.39
47	SLE RA 15	76	29	3267	-21.82	6.78	0.54
47	SLE RA 16	28	22	3188	-12.86	4.12	0.39
47	SLE RA 17	79	29	3254	-21.73	6.91	0.53
47	SLE RA 18	11	22	3253	-12.87	3.38	0.39
47	SLE RA 19	62	29	3319	-21.74	6.16	0.53
47	SLE RA 20	21	22	3274	-13.03	3.85	0.39
47	SLE RA 21	72	29	3340	-21.9	6.64	0.54
47	SLE FR 1	6	20	2897	-11.78	2.71	0.35
47	SLE FR 2	23	22	2919	-14.74	3.64	0.4
47	SLE FR 3	9	20	2905	-11.84	2.9	0.35
47	SLE FR 4	24	23	3026	-15.07	3.84	0.41
47	SLE FR 5	11	21	3012	-12.17	3.1	0.36
47	SLE FR 6	9	21	3075	-12.33	3.05	0.37
47	SLE QP 1	6	20	2897	-11.78	2.71	0.35
47	SLE QP 2	7	20	3004	-12.11	2.91	0.36
47	SLD 1	1128	44	3556	-36.07	57.32	0.8
47	SLD 2	1128	44	3556	-36.07	57.32	0.8
47	SLD 3	1013	22	3197	-10.78	51.46	0.33
47	SLD 4	1013	22	3197	-10.78	51.46	0.33
47	SLD 5	517	62	3714	-57.64	28.11	1.21
47	SLD 6	517	62	3714	-57.64	28.11	1.21
47	SLD 7	135	-14	2518	26.64	8.6	-0.36
47	SLD 8	135	-14	2518	26.64	8.6	-0.36
47	SLD 9	-121	55	3490	-50.85	-2.78	1.08
47	SLD 10	-121	55	3490	-50.85	-2.78	1.08
47	SLD 11	-503	-22	2294	33.43	-22.29	-0.48
47	SLD 12	-503	-22	2294	33.43	-22.29	-0.48
47	SLD 13	-999	19	2811	-13.43	-45.64	0.39
47	SLD 14	-999	19	2811	-13.43	-45.64	0.39
47	SLD 15	-1113	-4	2452	11.85	-51.5	-0.08
47	SLD 16	-1113	-4	2452	11.85	-51.5	-0.08
47	SLV 1	2571	79	4297	-71.13	127.45	1.45
47	SLV 2	2571	79	4297	-71.13	127.45	1.45
47	SLV 3	2287	22	3446	-8.17	112.84	0.28
47	SLV 4	2287	22	3446	-8.17	112.84	0.28
47	SLV 5	1207	124	4681	-125.31	62.44	2.46
47	SLV 6	1207	124	4681	-125.31	62.44	2.46
47	SLV 7	260	-65	1847	84.57	13.72	-1.44
47	SLV 8	260	-65	1847	84.57	13.72	-1.44
47	SLV 9	-245	106	4161	-108.79	-7.9	2.16
47	SLV 10	-245	106	4161	-108.79	-7.9	2.16
47	SLV 11	-1193	-84	1326	101.09	-56.62	-1.74
47	SLV 12	-1193	-84	1326	101.09	-56.62	-1.74
47	SLV 13	-2272	19	2561	-16.05	-107.02	0.45
47	SLV 14	-2272	19	2561	-16.05	-107.02	0.45
47	SLV 15	-2556	-38	1711	46.91	-121.63	-0.72
47	SLV 16	-2556	-38	1711	46.91	-121.63	-0.72
48	SLU 1	132	17	2560	-11.58	5.47	0.21
48	SLU 2	253	36	2715	-35.99	10.55	0.4
48	SLU 3	147	18	2603	-11.95	6.05	0.21
48	SLU 4	219	29	2696	-26.6	9.11	0.33
48	SLU 5	270	36	2743	-36.22	11.26	0.4
48	SLU 6	164	18	2631	-12.19	6.76	0.22
48	SLU 7	236	29	2724	-26.84	9.81	0.33
48	SLU 8	167	18	2615	-12.05	6.88	0.22
48	SLU 9	239	29	2708	-26.7	9.93	0.33
48	SLU 10	274	37	3060	-37.14	11.47	0.42
48	SLU 11	168	20	2948	-13.11	6.97	0.24
48	SLU 12	240	31	3041	-27.75	10.02	0.35
48	SLU 13	291	38	3088	-37.38	12.17	0.43
48	SLU 14	186	20	2976	-13.35	7.67	0.24
48	SLU 15	258	31	3069	-27.99	10.73	0.36
48	SLU 16	189	20	2960	-13.21	7.79	0.24
48	SLU 17	261	31	3053	-27.85	10.85	0.36
48	SLU 18	163	20	3053	-13.23	6.77	0.24
48	SLU 19	235	31	3146	-27.87	9.83	0.36

Nodo	Cont.	Reazione a traslazione			Reazione a rotazione		
Ind.	N.br.	x	y	z	x	y	z
48	SLU 20	180	20	3080	-13.46	7.48	0.25
48	SLU 21	253	31	3173	-28.11	10.53	0.36
48	SLU 22	151	19	2854	-12.78	6.25	0.23
48	SLU 23	271	38	3009	-37.19	11.34	0.42
48	SLU 24	165	20	2897	-13.16	6.84	0.24
48	SLU 25	237	31	2991	-27.8	9.89	0.35
48	SLU 26	288	38	3037	-37.43	12.05	0.43
48	SLU 27	183	20	2925	-13.39	7.54	0.24
48	SLU 28	255	31	3018	-28.04	10.6	0.36
48	SLU 29	186	20	2909	-13.26	7.66	0.24
48	SLU 30	258	31	3002	-27.9	10.72	0.36
48	SLU 31	293	39	3354	-38.34	12.25	0.45
48	SLU 32	187	21	3242	-14.31	7.75	0.26
48	SLU 33	259	33	3335	-28.95	10.81	0.38
48	SLU 34	310	40	3382	-38.58	12.96	0.45
48	SLU 35	204	22	3270	-14.55	8.46	0.27
48	SLU 36	276	33	3363	-29.19	11.51	0.38
48	SLU 37	207	22	3254	-14.41	8.58	0.26
48	SLU 38	279	33	3347	-29.05	11.63	0.38
48	SLU 39	182	22	3347	-14.43	7.56	0.27
48	SLU 40	254	33	3440	-29.07	10.61	0.38
48	SLU 41	199	22	3374	-14.67	8.26	0.27
48	SLU 42	271	33	3467	-29.31	11.32	0.39
48	SLU 43	166	22	3227	-14.64	6.84	0.26
48	SLU 44	286	40	3382	-39.05	11.92	0.45
48	SLU 45	180	22	3270	-15.01	7.42	0.27
48	SLU 46	252	33	3363	-29.66	10.48	0.38
48	SLU 47	303	40	3410	-39.28	12.63	0.46
48	SLU 48	197	23	3298	-15.25	8.13	0.27
48	SLU 49	270	34	3391	-29.9	11.18	0.39
48	SLU 50	200	22	3282	-15.11	8.25	0.27
48	SLU 51	273	33	3375	-29.76	11.3	0.39
48	SLU 52	307	42	3727	-40.2	12.84	0.48
48	SLU 53	202	24	3615	-16.17	8.34	0.29
48	SLU 54	274	35	3708	-30.81	11.39	0.41
48	SLU 55	325	42	3755	-40.44	13.55	0.48
48	SLU 56	219	24	3643	-16.41	9.04	0.3
48	SLU 57	291	35	3736	-31.05	12.1	0.41
48	SLU 58	222	24	3627	-16.27	9.16	0.29
48	SLU 59	294	35	3720	-30.91	12.22	0.41
48	SLU 60	197	24	3720	-16.29	8.14	0.3
48	SLU 61	269	35	3813	-30.93	11.2	0.41
48	SLU 62	214	25	3747	-16.52	8.85	0.3
48	SLU 63	286	36	3840	-31.17	11.9	0.42
48	SLU 64	184	24	3521	-15.84	7.62	0.29
48	SLU 65	304	42	3676	-40.25	12.71	0.48
48	SLU 66	199	24	3565	-16.22	8.21	0.29
48	SLU 67	271	35	3658	-30.86	11.26	0.41
48	SLU 68	322	42	3704	-40.49	13.42	0.48
48	SLU 69	216	24	3592	-16.46	8.91	0.3
48	SLU 70	288	36	3685	-31.1	11.97	0.41
48	SLU 71	219	24	3576	-16.32	9.03	0.29
48	SLU 72	291	35	3669	-30.96	12.09	0.41
48	SLU 73	326	44	4021	-41.4	13.62	0.5
48	SLU 74	220	26	3909	-17.37	9.12	0.32
48	SLU 75	292	37	4003	-32.02	12.18	0.43
48	SLU 76	343	44	4049	-41.64	14.33	0.51
48	SLU 77	238	26	3937	-17.61	9.83	0.32
48	SLU 78	310	37	4030	-32.25	12.88	0.44
48	SLU 79	240	26	3921	-17.47	9.95	0.32
48	SLU 80	313	37	4014	-32.12	13	0.43
48	SLU 81	215	26	4014	-17.49	8.93	0.32
48	SLU 82	287	37	4107	-32.13	11.98	0.44
48	SLU 83	232	27	4042	-17.73	9.63	0.32
48	SLU 84	304	38	4135	-32.37	12.69	0.44
48	SLE RA 1	138	18	2644	-11.92	5.69	0.21
48	SLE RA 2	218	30	2747	-28.19	9.08	0.34
48	SLE RA 3	147	18	2673	-12.17	6.08	0.22
48	SLE RA 4	195	25	2735	-21.93	8.12	0.3
48	SLE RA 5	229	30	2766	-28.35	9.55	0.35
48	SLE RA 6	159	18	2691	-12.33	6.55	0.22
48	SLE RA 7	207	26	2753	-22.09	8.59	0.3
48	SLE RA 8	161	18	2681	-12.24	6.63	0.22
48	SLE RA 9	209	26	2743	-22	8.67	0.3
48	SLE RA 10	232	31	2977	-28.96	9.69	0.36
48	SLE RA 11	162	19	2903	-12.94	6.69	0.23
48	SLE RA 12	210	27	2965	-22.7	8.73	0.31
48	SLE RA 13	244	31	2996	-29.12	10.16	0.36
48	SLE RA 14	173	20	2921	-13.1	7.16	0.24
48	SLE RA 15	221	27	2983	-22.86	9.2	0.31
48	SLE RA 16	175	19	2911	-13.01	7.24	0.24
48	SLE RA 17	223	27	2973	-22.77	9.28	0.31
48	SLE RA 18	158	19	2972	-13.02	6.56	0.24
48	SLE RA 19	206	27	3035	-22.78	8.6	0.31
48	SLE RA 20	170	20	2991	-13.18	7.03	0.24
48	SLE RA 21	218	27	3053	-22.94	9.07	0.32
48	SLE FR 1	138	18	2644	-11.92	5.69	0.21
48	SLE FR 2	154	20	2665	-15.18	6.37	0.24
48	SLE FR 3	142	18	2651	-11.98	5.88	0.22
48	SLE FR 4	160	21	2763	-15.51	6.63	0.25
48	SLE FR 5	148	18	2750	-12.31	6.14	0.22

Nodo	Cont.	Reazione a traslazione			Reazione a rotazione		
Ind.	N.br.	x	y	z	x	y	z
48	SLE FR 6	148	19	2808	-12.47	6.13	0.23
48	SLE QP 1	138	18	2644	-11.92	5.69	0.21
48	SLE QP 2	144	18	2743	-12.25	5.95	0.22
48	SLD 1	1339	42	3195	-38.23	54.78	0.46
48	SLD 2	1339	42	3195	-38.23	54.78	0.46
48	SLD 3	1230	18	2881	-10.3	50.25	0.21
48	SLD 4	1230	18	2881	-10.3	50.25	0.21
48	SLD 5	667	60	3354	-62.42	27.46	0.67
48	SLD 6	667	60	3354	-62.42	27.46	0.67
48	SLD 7	305	-17	2308	30.71	12.38	-0.16
48	SLD 8	305	-17	2308	30.71	12.38	-0.16
48	SLD 9	-17	53	3177	-55.21	-0.48	0.61
48	SLD 10	-17	53	3177	-55.21	-0.48	0.61
48	SLD 11	-380	-24	2131	37.91	-15.56	-0.23
48	SLD 12	-380	-24	2131	37.91	-15.56	-0.23
48	SLD 13	-942	18	2604	-14.2	-38.35	0.24
48	SLD 14	-942	18	2604	-14.2	-38.35	0.24
48	SLD 15	-1051	-5	2290	13.73	-42.87	-0.01
48	SLD 16	-1051	-5	2290	13.73	-42.87	-0.01
48	SLV 1	2878	75	3803	-76.35	117.69	0.8
48	SLV 2	2878	75	3803	-76.35	117.69	0.8
48	SLV 3	2606	18	3053	-6.74	106.35	0.18
48	SLV 4	2606	18	3053	-6.74	106.35	0.18
48	SLV 5	1377	123	4198	-137.05	56.66	1.34
48	SLV 6	1377	123	4198	-137.05	56.66	1.34
48	SLV 7	470	-69	1699	94.97	18.88	-0.74
48	SLV 8	470	-69	1699	94.97	18.88	-0.74
48	SLV 9	-182	106	3786	-119.47	-6.98	1.18
48	SLV 10	-182	106	3786	-119.47	-6.98	1.18
48	SLV 11	-1089	-86	1287	112.55	-44.76	-0.89
48	SLV 12	-1089	-86	1287	112.55	-44.76	-0.89
48	SLV 13	-2318	19	2432	-17.76	-94.45	0.27
48	SLV 14	-2318	19	2432	-17.76	-94.45	0.27
48	SLV 15	-2590	-39	1682	51.85	-105.78	-0.35
48	SLV 16	-2590	-39	1682	51.85	-105.78	-0.35
49	SLU 1	190	22	2507	-13.42	10.24	-0.96
49	SLU 2	309	42	2683	-38.93	15.04	-1.49
49	SLU 3	206	22	2549	-13.84	11.03	-0.99
49	SLU 4	278	34	2655	-29.15	13.91	-1.31
49	SLU 5	328	42	2711	-39.2	15.92	-1.51
49	SLU 6	225	23	2576	-14.11	11.9	-1.01
49	SLU 7	296	35	2682	-29.42	14.79	-1.33
49	SLU 8	227	23	2562	-13.96	11.99	-1
49	SLU 9	299	35	2668	-29.26	14.87	-1.32
49	SLU 10	339	44	3025	-40.35	16.52	-1.61
49	SLU 11	236	25	2890	-15.26	12.5	-1.11
49	SLU 12	308	37	2996	-30.56	15.39	-1.43
49	SLU 13	358	45	3052	-40.62	17.39	-1.63
49	SLU 14	255	25	2917	-15.53	13.38	-1.12
49	SLU 15	326	37	3023	-30.84	16.26	-1.44
49	SLU 16	257	25	2903	-15.38	13.47	-1.11
49	SLU 17	329	37	3009	-30.68	16.35	-1.43
49	SLU 18	233	25	2994	-15.44	12.35	-1.13
49	SLU 19	304	37	3100	-30.75	15.23	-1.45
49	SLU 20	251	26	3022	-15.71	13.22	-1.15
49	SLU 21	323	38	3128	-31.02	16.11	-1.47
49	SLU 22	216	24	2796	-14.86	11.56	-1.07
49	SLU 23	336	44	2972	-40.37	16.36	-1.61
49	SLU 24	232	25	2838	-15.28	12.35	-1.1
49	SLU 25	304	37	2944	-30.59	15.23	-1.42
49	SLU 26	354	45	3000	-40.64	17.24	-1.63
49	SLU 27	251	25	2865	-15.55	13.23	-1.12
49	SLU 28	323	37	2971	-30.86	16.11	-1.44
49	SLU 29	253	25	2851	-15.4	13.31	-1.11
49	SLU 30	325	37	2957	-30.71	16.2	-1.43
49	SLU 31	366	47	3314	-41.79	17.84	-1.73
49	SLU 32	262	27	3179	-16.7	13.83	-1.22
49	SLU 33	334	39	3285	-32.01	16.71	-1.54
49	SLU 34	384	47	3341	-42.06	18.72	-1.74
49	SLU 35	281	28	3206	-16.97	14.7	-1.24
49	SLU 36	353	40	3312	-32.28	17.59	-1.56
49	SLU 37	283	28	3192	-16.82	14.79	-1.23
49	SLU 38	355	40	3298	-32.13	17.67	-1.55
49	SLU 39	259	28	3283	-16.89	13.67	-1.24
49	SLU 40	331	40	3389	-32.19	16.55	-1.56
49	SLU 41	278	28	3311	-17.16	14.55	-1.26
49	SLU 42	349	40	3417	-32.46	17.43	-1.58
49	SLU 43	238	27	3160	-16.95	12.86	-1.21
49	SLU 44	357	48	3336	-42.46	17.66	-1.74
49	SLU 45	254	28	3202	-17.37	13.64	-1.24
49	SLU 46	326	40	3308	-32.68	16.53	-1.56
49	SLU 47	376	48	3364	-42.73	18.54	-1.76
49	SLU 48	272	28	3229	-17.64	14.52	-1.25
49	SLU 49	344	41	3335	-32.95	17.4	-1.57
49	SLU 50	275	28	3215	-17.49	14.61	-1.24
49	SLU 51	347	40	3321	-32.79	17.49	-1.56
49	SLU 52	387	50	3677	-43.88	19.14	-1.86
49	SLU 53	284	30	3543	-18.79	15.12	-1.35
49	SLU 54	356	43	3649	-34.09	18	-1.67
49	SLU 55	406	50	3705	-44.15	20.01	-1.88
49	SLU 56	303	31	3570	-19.06	16	-1.37

Nodo	Cont.	Reazione a traslazione			Reazione a rotazione		
Ind.	N.br.	x	y	z	x	y	z
49	SLU 57	374	43	3676	-34.37	18.88	-1.69
49	SLU 58	305	31	3556	-18.91	16.09	-1.36
49	SLU 59	377	43	3662	-34.21	18.97	-1.68
49	SLU 60	280	31	3647	-18.97	14.97	-1.37
49	SLU 61	352	43	3753	-34.28	17.85	-1.7
49	SLU 62	299	31	3675	-19.25	15.84	-1.39
49	SLU 63	371	43	3781	-34.55	18.72	-1.71
49	SLU 64	264	30	3449	-18.39	14.18	-1.32
49	SLU 65	384	50	3625	-43.9	18.98	-1.86
49	SLU 66	280	30	3491	-18.81	14.97	-1.35
49	SLU 67	352	43	3597	-34.12	17.85	-1.67
49	SLU 68	402	50	3653	-44.17	19.86	-1.87
49	SLU 69	299	31	3518	-19.08	15.84	-1.37
49	SLU 70	371	43	3624	-34.39	18.73	-1.69
49	SLU 71	301	31	3504	-18.93	15.93	-1.36
49	SLU 72	373	43	3610	-34.24	18.81	-1.68
49	SLU 73	414	53	3966	-45.32	20.46	-1.97
49	SLU 74	310	33	3832	-20.23	16.44	-1.47
49	SLU 75	382	45	3938	-35.54	19.33	-1.79
49	SLU 76	432	53	3994	-45.59	21.34	-1.99
49	SLU 77	329	33	3859	-20.5	17.32	-1.49
49	SLU 78	401	46	3965	-35.81	20.2	-1.81
49	SLU 79	331	33	3845	-20.35	17.41	-1.48
49	SLU 80	403	45	3951	-35.66	20.29	-1.8
49	SLU 81	307	33	3936	-20.42	16.29	-1.49
49	SLU 82	379	45	4042	-35.72	19.17	-1.81
49	SLU 83	326	34	3964	-20.69	17.16	-1.51
49	SLU 84	397	46	4070	-35.99	20.05	-1.83
49	SLE RA 1	197	22	2589	-13.83	10.62	-0.99
49	SLE RA 2	277	36	2707	-30.84	13.82	-1.35
49	SLE RA 3	208	23	2617	-14.11	11.14	-1.01
49	SLE RA 4	256	31	2688	-24.31	13.06	-1.22
49	SLE RA 5	289	36	2725	-31.02	14.4	-1.36
49	SLE RA 6	221	23	2636	-14.29	11.73	-1.02
49	SLE RA 7	268	31	2706	-24.5	13.65	-1.24
49	SLE RA 8	222	23	2626	-14.19	11.79	-1.02
49	SLE RA 9	270	31	2697	-24.39	13.71	-1.23
49	SLE RA 10	297	38	2934	-31.78	14.8	-1.43
49	SLE RA 11	228	24	2845	-15.06	12.13	-1.09
49	SLE RA 12	276	33	2915	-25.26	14.05	-1.3
49	SLE RA 13	309	38	2953	-31.96	15.39	-1.44
49	SLE RA 14	241	25	2863	-15.24	12.71	-1.1
49	SLE RA 15	288	33	2934	-25.44	14.63	-1.32
49	SLE RA 16	242	25	2854	-15.14	12.77	-1.09
49	SLE RA 17	290	33	2924	-25.34	14.69	-1.31
49	SLE RA 18	226	25	2914	-15.18	12.02	-1.1
49	SLE RA 19	274	33	2985	-25.38	13.94	-1.32
49	SLE RA 20	238	25	2933	-15.36	12.61	-1.12
49	SLE RA 21	286	33	3003	-25.56	14.53	-1.33
49	SLE FR 1	197	22	2589	-13.83	10.62	-0.99
49	SLE FR 2	213	25	2613	-17.23	11.26	-1.06
49	SLE FR 3	202	22	2597	-13.9	10.85	-1
49	SLE FR 4	222	26	2710	-17.64	11.68	-1.1
49	SLE FR 5	211	23	2694	-14.31	11.27	-1.03
49	SLE FR 6	212	24	2752	-14.5	11.32	-1.05
49	SLE QP 1	197	22	2589	-13.83	10.62	-0.99
49	SLE QP 2	206	23	2687	-14.23	11.04	-1.02
49	SLD 1	1421	48	3162	-41.09	66.89	-1.72
49	SLD 2	1421	48	3162	-41.09	66.89	-1.72
49	SLD 3	1311	22	2875	-11.53	62.13	-0.98
49	SLD 4	1311	22	2875	-11.53	62.13	-0.98
49	SLD 5	736	70	3266	-67.11	35.01	-2.36
49	SLD 6	736	70	3266	-67.11	35.01	-2.36
49	SLD 7	371	-17	2307	31.4	19.15	0.11
49	SLD 8	371	-17	2307	31.4	19.15	0.11
49	SLD 9	40	63	3067	-59.87	2.93	-2.16
49	SLD 10	40	63	3067	-59.87	2.93	-2.16
49	SLD 11	-325	-24	2108	38.64	-12.93	0.31
49	SLD 12	-325	-24	2108	38.64	-12.93	0.31
49	SLD 13	-899	24	2499	-16.94	-40.06	-1.07
49	SLD 14	-899	24	2499	-16.94	-40.06	-1.07
49	SLD 15	-1009	-2	2211	12.62	-44.81	-0.33
49	SLD 16	-1009	-2	2211	12.62	-44.81	-0.33
49	SLV 1	2986	85	3795	-80.58	138.83	-2.74
49	SLV 2	2986	85	3795	-80.58	138.83	-2.74
49	SLV 3	2712	20	3106	-6.96	126.94	-0.91
49	SLV 4	2712	20	3106	-6.96	126.94	-0.91
49	SLV 5	1456	140	4064	-145.8	67.42	-4.32
49	SLV 6	1456	140	4064	-145.8	67.42	-4.32
49	SLV 7	541	-76	1768	99.61	27.77	1.79
49	SLV 8	541	-76	1768	99.61	27.77	1.79
49	SLV 9	-130	122	3606	-128.08	-5.69	-3.84
49	SLV 10	-130	122	3606	-128.08	-5.69	-3.84
49	SLV 11	-1044	-94	1310	117.33	-45.34	2.27
49	SLV 12	-1044	-94	1310	117.33	-45.34	2.27
49	SLV 13	-2300	26	2268	-21.51	-104.86	-1.14
49	SLV 14	-2300	26	2268	-21.51	-104.86	-1.14
49	SLV 15	-2574	-39	1579	52.11	-116.76	0.69
49	SLV 16	-2574	-39	1579	52.11	-116.76	0.69
50	SLU 1	275	24	2577	-16.43	11.76	0.51
50	SLU 2	364	45	2798	-41.83	15.64	0.51

Nodo	Cont.	Reazione a traslazione			Reazione a rotazione		
Ind.	N.br.	x	y	z	x	y	z
50	SLU 3	293	25	2620	-16.93	12.68	0.52
50	SLU 4	347	37	2753	-32.17	15	0.52
50	SLU 5	384	45	2827	-42.16	16.64	0.52
50	SLU 6	313	26	2649	-17.26	13.68	0.53
50	SLU 7	367	38	2782	-32.5	16	0.53
50	SLU 8	314	25	2635	-17.08	13.77	0.53
50	SLU 9	368	38	2768	-32.32	16.09	0.53
50	SLU 10	404	48	3153	-43.68	17.25	0.58
50	SLU 11	333	28	2975	-18.79	14.29	0.59
50	SLU 12	386	40	3108	-34.03	16.61	0.59
50	SLU 13	423	48	3182	-44.01	18.25	0.59
50	SLU 14	353	29	3004	-19.11	15.29	0.6
50	SLU 15	406	41	3137	-34.35	17.61	0.6
50	SLU 16	354	28	2990	-18.93	15.38	0.6
50	SLU 17	407	41	3123	-34.17	17.7	0.6
50	SLU 18	331	29	3084	-19.07	14.06	0.61
50	SLU 19	385	41	3217	-34.32	16.39	0.61
50	SLU 20	351	29	3113	-19.4	15.06	0.62
50	SLU 21	405	41	3246	-34.64	17.39	0.62
50	SLU 22	310	27	2876	-18.27	13.23	0.58
50	SLU 23	400	48	3098	-43.67	17.1	0.57
50	SLU 24	329	28	2920	-18.77	14.14	0.59
50	SLU 25	382	40	3052	-34.02	16.46	0.59
50	SLU 26	419	48	3127	-44	18.1	0.58
50	SLU 27	349	29	2949	-19.1	15.14	0.6
50	SLU 28	402	41	3082	-34.34	17.47	0.6
50	SLU 29	350	28	2935	-18.92	15.23	0.59
50	SLU 30	403	40	3068	-34.16	17.55	0.59
50	SLU 31	439	51	3453	-45.52	18.71	0.64
50	SLU 32	368	31	3275	-20.63	15.75	0.66
50	SLU 33	422	43	3407	-35.87	18.07	0.66
50	SLU 34	459	51	3482	-45.85	19.71	0.65
50	SLU 35	388	31	3304	-20.95	16.75	0.67
50	SLU 36	441	44	3437	-36.19	19.08	0.67
50	SLU 37	389	31	3290	-20.77	16.84	0.67
50	SLU 38	443	43	3423	-36.01	19.16	0.66
50	SLU 39	367	31	3383	-20.92	15.53	0.68
50	SLU 40	420	44	3516	-36.16	17.85	0.68
50	SLU 41	386	32	3413	-21.24	16.53	0.69
50	SLU 42	440	44	3546	-36.48	18.85	0.68
50	SLU 43	345	31	3247	-20.73	14.79	0.64
50	SLU 44	435	51	3468	-46.13	18.66	0.64
50	SLU 45	364	32	3290	-21.23	15.7	0.65
50	SLU 46	417	44	3423	-36.47	18.03	0.65
50	SLU 47	454	52	3498	-46.45	19.66	0.65
50	SLU 48	384	32	3319	-21.56	16.71	0.66
50	SLU 49	437	44	3452	-36.8	19.03	0.66
50	SLU 50	385	32	3305	-21.38	16.79	0.66
50	SLU 51	438	44	3438	-36.62	19.12	0.66
50	SLU 52	474	54	3823	-47.98	20.27	0.71
50	SLU 53	403	34	3645	-23.08	17.31	0.72
50	SLU 54	457	47	3778	-38.32	19.64	0.72
50	SLU 55	494	55	3853	-48.31	21.27	0.72
50	SLU 56	423	35	3674	-23.41	18.32	0.73
50	SLU 57	477	47	3807	-38.65	20.64	0.73
50	SLU 58	424	35	3660	-23.23	18.4	0.73
50	SLU 59	478	47	3793	-38.47	20.73	0.73
50	SLU 60	402	35	3754	-23.37	17.09	0.74
50	SLU 61	455	47	3887	-38.61	19.41	0.74
50	SLU 62	421	35	3783	-23.7	18.09	0.75
50	SLU 63	475	48	3916	-38.94	20.42	0.75
50	SLU 64	381	34	3546	-22.57	16.25	0.71
50	SLU 65	470	54	3768	-47.97	20.13	0.7
50	SLU 66	399	34	3590	-23.07	17.17	0.72
50	SLU 67	453	47	3723	-38.31	19.49	0.72
50	SLU 68	490	54	3797	-48.29	21.13	0.71
50	SLU 69	419	35	3619	-23.4	18.17	0.73
50	SLU 70	473	47	3752	-38.64	20.49	0.73
50	SLU 71	420	35	3605	-23.22	18.26	0.72
50	SLU 72	474	47	3738	-38.46	20.58	0.72
50	SLU 73	509	57	4123	-49.82	21.74	0.77
50	SLU 74	439	37	3945	-24.92	18.78	0.79
50	SLU 75	492	50	4078	-40.17	21.1	0.79
50	SLU 76	529	57	4152	-50.15	22.74	0.78
50	SLU 77	458	38	3974	-25.25	19.78	0.8
50	SLU 78	512	50	4107	-40.49	22.1	0.8
50	SLU 79	459	38	3960	-25.07	19.87	0.8
50	SLU 80	513	50	4093	-40.31	22.19	0.79
50	SLU 81	437	38	4054	-25.21	18.55	0.81
50	SLU 82	491	50	4187	-40.45	20.88	0.81
50	SLU 83	457	38	4083	-25.54	19.56	0.82
50	SLU 84	510	51	4216	-40.78	21.88	0.81
50	SLE RA 1	285	25	2662	-16.95	12.18	0.53
50	SLE RA 2	345	39	2810	-33.89	14.76	0.53
50	SLE RA 3	297	26	2691	-17.29	12.79	0.54
50	SLE RA 4	333	34	2780	-27.45	14.34	0.54
50	SLE RA 5	358	39	2829	-34.11	15.43	0.53
50	SLE RA 6	311	26	2711	-17.51	13.46	0.54
50	SLE RA 7	346	34	2799	-27.67	15.01	0.54
50	SLE RA 8	311	26	2701	-17.39	13.52	0.54
50	SLE RA 9	347	34	2790	-27.55	15.07	0.54

Nodo	Cont.	Reazione a traslazione			Reazione a rotazione		
Ind.	N.br.	x	y	z	x	y	z
50	SLE RA 10	371	41	3047	-35.12	15.84	0.57
50	SLE RA 11	324	28	2928	-18.53	13.86	0.59
50	SLE RA 12	359	36	3016	-28.69	15.41	0.58
50	SLE RA 13	384	41	3066	-35.34	16.5	0.58
50	SLE RA 14	337	28	2947	-18.74	14.53	0.59
50	SLE RA 15	373	36	3036	-28.9	16.08	0.59
50	SLE RA 16	338	28	2938	-18.62	14.59	0.59
50	SLE RA 17	373	36	3026	-28.78	16.14	0.59
50	SLE RA 18	323	28	3000	-18.72	13.71	0.6
50	SLE RA 19	358	36	3089	-28.88	15.26	0.59
50	SLE RA 20	336	28	3020	-18.94	14.38	0.6
50	SLE RA 21	371	36	3108	-29.1	15.93	0.6
50	SLE FR 1	285	25	2662	-16.95	12.18	0.53
50	SLE FR 2	297	28	2692	-20.34	12.7	0.53
50	SLE FR 3	290	25	2670	-17.04	12.45	0.53
50	SLE FR 4	308	29	2793	-20.87	13.16	0.55
50	SLE FR 5	302	26	2771	-17.57	12.91	0.55
50	SLE FR 6	304	27	2831	-17.84	12.95	0.56
50	SLE QP 1	285	25	2662	-16.95	12.18	0.53
50	SLE QP 2	296	26	2764	-17.48	12.64	0.55
50	SLD 1	1490	51	3263	-44.19	75.64	0.66
50	SLD 2	1490	51	3263	-44.19	75.64	0.66
50	SLD 3	1389	24	3003	-14.32	70.81	0.54
50	SLD 4	1389	24	3003	-14.32	70.81	0.54
50	SLD 5	807	74	3308	-70.79	38.86	0.77
50	SLD 6	807	74	3308	-70.79	38.86	0.77
50	SLD 7	472	-15	2441	28.76	22.77	0.36
50	SLD 8	472	-15	2441	28.76	22.77	0.36
50	SLD 9	121	67	3086	-63.73	2.51	0.74
50	SLD 10	121	67	3086	-63.73	2.51	0.74
50	SLD 11	-214	-22	2219	35.83	-13.58	0.33
50	SLD 12	-214	-22	2219	35.83	-13.58	0.33
50	SLD 13	-797	28	2524	-20.65	-45.53	0.56
50	SLD 14	-797	28	2524	-20.65	-45.53	0.56
50	SLD 15	-897	1	2264	9.22	-50.36	0.43
50	SLD 16	-897	1	2264	9.22	-50.36	0.43
50	SLV 1	3027	88	3922	-83.51	156.69	0.82
50	SLV 2	3027	88	3922	-83.51	156.69	0.82
50	SLV 3	2777	21	3301	-9.16	144.7	0.53
50	SLV 4	2777	21	3301	-9.16	144.7	0.53
50	SLV 5	1495	145	4053	-150.06	74.03	1.07
50	SLV 6	1495	145	4053	-150.06	74.03	1.07
50	SLV 7	661	-76	1984	97.77	34.08	0.1
50	SLV 8	661	-76	1984	97.77	34.08	0.1
50	SLV 9	-68	128	3544	-132.74	-8.8	0.99
50	SLV 10	-68	128	3544	-132.74	-8.8	0.99
50	SLV 11	-902	-93	1475	115.09	-48.75	0.02
50	SLV 12	-902	-93	1475	115.09	-48.75	0.02
50	SLV 13	-2184	31	2226	-25.8	-119.42	0.56
50	SLV 14	-2184	31	2226	-25.8	-119.42	0.56
50	SLV 15	-2434	-36	1605	48.55	-131.4	0.27
50	SLV 16	-2434	-36	1605	48.55	-131.4	0.27
51	SLU 1	258	31	2679	-19.51	11.2	0.46
51	SLU 2	304	49	2963	-43.5	13.03	0.37
51	SLU 3	276	32	2724	-20.1	12.09	0.47
51	SLU 4	304	43	2894	-34.49	13.18	0.42
51	SLU 5	323	50	2994	-43.88	13.99	0.38
51	SLU 6	295	32	2755	-20.47	13.05	0.48
51	SLU 7	323	43	2925	-34.87	14.15	0.43
51	SLU 8	296	32	2740	-20.27	13.13	0.48
51	SLU 9	324	43	2911	-34.66	14.23	0.43
51	SLU 10	337	53	3338	-45.82	14.41	0.44
51	SLU 11	309	35	3099	-22.41	13.47	0.54
51	SLU 12	337	47	3270	-36.8	14.56	0.49
51	SLU 13	356	54	3369	-46.19	15.37	0.45
51	SLU 14	328	36	3130	-22.79	14.43	0.55
51	SLU 15	356	47	3300	-37.18	15.53	0.5
51	SLU 16	329	36	3115	-22.58	14.51	0.54
51	SLU 17	357	47	3286	-36.98	15.61	0.49
51	SLU 18	305	36	3214	-22.81	13.17	0.55
51	SLU 19	333	47	3385	-37.21	14.27	0.5
51	SLU 20	324	37	3245	-23.19	14.14	0.56
51	SLU 21	352	48	3416	-37.59	15.23	0.51
51	SLU 22	288	34	2995	-21.77	12.48	0.52
51	SLU 23	334	53	3279	-45.77	14.31	0.43
51	SLU 24	306	35	3040	-22.36	13.37	0.53
51	SLU 25	334	46	3210	-36.75	14.46	0.48
51	SLU 26	353	54	3310	-46.14	15.27	0.44
51	SLU 27	325	36	3071	-22.74	14.33	0.54
51	SLU 28	353	47	3241	-37.13	15.43	0.49
51	SLU 29	326	35	3056	-22.53	14.41	0.54
51	SLU 30	354	47	3227	-36.92	15.5	0.49
51	SLU 31	367	57	3654	-48.08	15.69	0.5
51	SLU 32	339	39	3415	-24.67	14.75	0.6
51	SLU 33	367	50	3586	-39.07	15.84	0.55
51	SLU 34	386	57	3685	-48.46	16.65	0.51
51	SLU 35	358	40	3446	-25.05	15.71	0.61
51	SLU 36	386	51	3616	-39.44	16.81	0.56
51	SLU 37	359	39	3431	-24.84	15.79	0.6
51	SLU 38	387	51	3602	-39.24	16.88	0.55
51	SLU 39	335	40	3530	-25.07	14.45	0.61

Nodo	Cont.	Reazione a traslazione			Reazione a rotazione		
Ind.	N.br.	x	y	z	x	y	z
51	SLU 40	363	51	3701	-39.47	15.55	0.56
51	SLU 41	354	40	3561	-25.45	15.42	0.62
51	SLU 42	382	52	3732	-39.85	16.51	0.57
51	SLU 43	325	38	3374	-24.59	14.12	0.58
51	SLU 44	371	57	3658	-48.58	15.95	0.49
51	SLU 45	343	39	3419	-25.17	15.01	0.59
51	SLU 46	371	51	3590	-39.57	16.11	0.54
51	SLU 47	390	58	3689	-48.96	16.92	0.5
51	SLU 48	362	40	3450	-25.55	15.97	0.6
51	SLU 49	390	51	3621	-39.95	17.07	0.55
51	SLU 50	363	40	3436	-25.34	16.05	0.6
51	SLU 51	391	51	3606	-39.74	17.15	0.54
51	SLU 52	404	61	4033	-50.89	17.33	0.56
51	SLU 53	376	43	3794	-27.48	16.39	0.66
51	SLU 54	404	55	3965	-41.88	17.49	0.6
51	SLU 55	423	62	4064	-51.27	18.29	0.57
51	SLU 56	395	44	3825	-27.86	17.35	0.67
51	SLU 57	423	55	3996	-42.26	18.45	0.61
51	SLU 58	396	44	3811	-27.66	17.43	0.66
51	SLU 59	424	55	3981	-42.05	18.53	0.61
51	SLU 60	372	44	3910	-27.89	16.1	0.67
51	SLU 61	400	55	4080	-42.29	17.19	0.62
51	SLU 62	391	45	3941	-28.27	17.06	0.68
51	SLU 63	419	56	4111	-42.67	18.16	0.63
51	SLU 64	355	42	3690	-26.85	15.4	0.64
51	SLU 65	402	61	3974	-50.84	17.23	0.55
51	SLU 66	373	43	3735	-27.43	16.29	0.65
51	SLU 67	401	54	3906	-41.83	17.38	0.6
51	SLU 68	420	62	4005	-51.22	18.19	0.56
51	SLU 69	392	44	3766	-27.81	17.25	0.66
51	SLU 70	420	55	3937	-42.21	18.35	0.61
51	SLU 71	393	43	3752	-27.6	17.33	0.66
51	SLU 72	421	55	3922	-42	18.43	0.6
51	SLU 73	434	65	4349	-53.15	18.61	0.62
51	SLU 74	406	47	4110	-29.75	17.67	0.72
51	SLU 75	434	58	4281	-44.14	18.76	0.66
51	SLU 76	453	65	4380	-53.53	19.57	0.63
51	SLU 77	425	48	4141	-30.12	18.63	0.73
51	SLU 78	453	59	4312	-44.52	19.73	0.67
51	SLU 79	426	47	4127	-29.92	18.71	0.72
51	SLU 80	454	58	4297	-44.31	19.81	0.67
51	SLU 81	402	48	4226	-30.15	17.37	0.73
51	SLU 82	430	59	4396	-44.55	18.47	0.68
51	SLU 83	421	48	4257	-30.53	18.34	0.74
51	SLU 84	449	60	4427	-44.93	19.43	0.69
51	SLE RA 1	267	32	2769	-20.15	11.57	0.48
51	SLE RA 2	298	44	2958	-36.15	12.78	0.42
51	SLE RA 3	279	32	2799	-20.55	12.16	0.49
51	SLE RA 4	297	40	2913	-30.14	12.89	0.45
51	SLE RA 5	310	45	2979	-36.4	13.43	0.43
51	SLE RA 6	291	33	2820	-20.8	12.8	0.49
51	SLE RA 7	310	40	2933	-30.4	13.53	0.46
51	SLE RA 8	292	32	2810	-20.66	12.85	0.49
51	SLE RA 9	310	40	2924	-30.26	13.58	0.46
51	SLE RA 10	319	47	3208	-37.69	13.7	0.46
51	SLE RA 11	301	35	3049	-22.09	13.08	0.53
51	SLE RA 12	319	42	3163	-31.69	13.81	0.5
51	SLE RA 13	332	47	3229	-37.95	14.35	0.47
51	SLE RA 14	313	35	3070	-22.34	13.72	0.54
51	SLE RA 15	332	43	3183	-31.94	14.45	0.5
51	SLE RA 16	314	35	3060	-22.2	13.77	0.53
51	SLE RA 17	332	43	3174	-31.8	14.5	0.5
51	SLE RA 18	298	35	3126	-22.36	12.88	0.54
51	SLE RA 19	317	43	3240	-31.96	13.61	0.51
51	SLE RA 20	311	36	3147	-22.61	13.52	0.55
51	SLE RA 21	329	43	3260	-32.21	14.25	0.51
51	SLE FR 1	267	32	2769	-20.15	11.57	0.48
51	SLE FR 2	273	34	2807	-23.35	11.81	0.47
51	SLE FR 3	272	32	2777	-20.26	11.82	0.48
51	SLE FR 4	282	35	2914	-24.01	12.2	0.49
51	SLE FR 5	281	33	2884	-20.92	12.22	0.5
51	SLE FR 6	282	33	2948	-21.26	12.22	0.51
51	SLE QP 1	267	32	2769	-20.15	11.57	0.48
51	SLE QP 2	276	33	2876	-20.82	11.96	0.5
51	SLD 1	1430	56	3366	-45.99	72.58	0.63
51	SLD 2	1430	56	3366	-45.99	72.58	0.63
51	SLD 3	1342	31	3130	-17.33	68.38	0.51
51	SLD 4	1342	31	3130	-17.33	68.38	0.51
51	SLD 5	756	79	3381	-71.83	36.52	0.72
51	SLD 6	756	79	3381	-71.83	36.52	0.72
51	SLD 7	462	-7	2595	23.69	22.51	0.32
51	SLD 8	462	-7	2595	23.69	22.51	0.32
51	SLD 9	90	72	3157	-65.32	1.41	0.68
51	SLD 10	90	72	3157	-65.32	1.41	0.68
51	SLD 11	-204	-13	2372	30.2	-12.6	0.27
51	SLD 12	-204	-13	2372	30.2	-12.6	0.27
51	SLD 13	-789	35	2622	-24.3	-44.46	0.49
51	SLD 14	-789	35	2622	-24.3	-44.46	0.49
51	SLD 15	-878	9	2387	4.36	-48.66	0.37
51	SLD 16	-878	9	2387	4.36	-48.66	0.37
51	SLV 1	2914	91	4007	-83.11	150.48	0.81

Nodo	Cont.	Reazione a traslazione			Reazione a rotazione		
Ind.	N.br.	x	y	z	x	y	z
51	SLV 2	2914	91	4007	-83.11	150.48	0.81
51	SLV 3	2697	27	3448	-11.85	140.16	0.52
51	SLV 4	2697	27	3448	-11.85	140.16	0.52
51	SLV 5	1397	147	4064	-147.57	69.16	1.03
51	SLV 6	1397	147	4064	-147.57	69.16	1.03
51	SLV 7	673	-66	2199	89.94	34.78	0.06
51	SLV 8	673	-66	2199	89.94	34.78	0.06
51	SLV 9	-121	131	3553	-131.57	-10.86	0.93
51	SLV 10	-121	131	3553	-131.57	-10.86	0.93
51	SLV 11	-844	-81	1688	105.94	-45.24	-0.04
51	SLV 12	-844	-81	1688	105.94	-45.24	-0.04
51	SLV 13	-2144	39	2304	-29.78	-116.24	0.48
51	SLV 14	-2144	39	2304	-29.78	-116.24	0.48
51	SLV 15	-2361	-25	1745	41.48	-126.55	0.18
51	SLV 16	-2361	-25	1745	41.48	-126.55	0.18
52	SLU 1	210	34	2790	-22.23	9.33	0.51
52	SLU 2	214	51	3121	-44.02	9.41	0.11
52	SLU 3	227	35	2837	-22.89	10.15	0.53
52	SLU 4	229	45	3036	-35.96	10.2	0.29
52	SLU 5	232	51	3153	-44.44	10.32	0.12
52	SLU 6	244	36	2869	-23.31	11.05	0.54
52	SLU 7	247	46	3067	-36.38	11.1	0.3
52	SLU 8	246	36	2853	-23.08	11.13	0.53
52	SLU 9	248	45	3052	-36.15	11.18	0.29
52	SLU 10	236	55	3514	-46.74	10.42	0.19
52	SLU 11	249	40	3230	-25.61	11.16	0.6
52	SLU 12	251	49	3429	-38.69	11.21	0.36
52	SLU 13	254	56	3546	-47.17	11.33	0.2
52	SLU 14	267	40	3262	-26.04	12.06	0.61
52	SLU 15	269	50	3461	-39.11	12.11	0.37
52	SLU 16	268	40	3247	-25.8	12.14	0.61
52	SLU 17	270	50	3445	-38.88	12.19	0.37
52	SLU 18	242	41	3351	-26.12	10.77	0.62
52	SLU 19	245	50	3550	-39.2	10.82	0.38
52	SLU 20	260	41	3383	-26.55	11.68	0.63
52	SLU 21	262	51	3582	-39.62	11.73	0.39
52	SLU 22	231	39	3121	-24.87	10.29	0.58
52	SLU 23	235	55	3452	-46.66	10.37	0.18
52	SLU 24	248	40	3168	-25.52	11.11	0.6
52	SLU 25	250	49	3367	-38.6	11.16	0.36
52	SLU 26	253	55	3484	-47.08	11.27	0.19
52	SLU 27	265	40	3200	-25.95	12.01	0.61
52	SLU 28	268	50	3399	-39.02	12.06	0.37
52	SLU 29	267	40	3184	-25.72	12.09	0.6
52	SLU 30	269	50	3383	-38.79	12.14	0.36
52	SLU 31	257	59	3845	-49.38	11.38	0.26
52	SLU 32	270	44	3561	-28.25	12.12	0.67
52	SLU 33	272	54	3760	-41.32	12.17	0.43
52	SLU 34	275	60	3877	-49.81	12.28	0.27
52	SLU 35	288	45	3593	-28.67	13.02	0.68
52	SLU 36	290	54	3792	-41.75	13.07	0.44
52	SLU 37	289	44	3578	-28.44	13.1	0.68
52	SLU 38	291	54	3776	-41.52	13.15	0.44
52	SLU 39	263	45	3682	-28.76	11.73	0.69
52	SLU 40	266	55	3881	-41.83	11.78	0.45
52	SLU 41	281	45	3714	-29.19	12.63	0.7
52	SLU 42	283	55	3913	-42.26	12.68	0.46
52	SLU 43	266	43	3513	-27.99	11.8	0.65
52	SLU 44	270	59	3844	-49.78	11.89	0.24
52	SLU 45	283	44	3560	-28.65	12.62	0.66
52	SLU 46	285	54	3759	-41.72	12.67	0.42
52	SLU 47	288	60	3876	-50.21	12.79	0.25
52	SLU 48	300	45	3592	-29.08	13.52	0.67
52	SLU 49	303	55	3791	-42.15	13.57	0.43
52	SLU 50	302	44	3577	-28.84	13.61	0.66
52	SLU 51	304	54	3776	-41.92	13.66	0.42
52	SLU 52	292	64	4238	-52.51	12.9	0.32
52	SLU 53	305	49	3953	-31.38	13.63	0.73
52	SLU 54	307	58	4152	-44.45	13.68	0.49
52	SLU 55	310	64	4269	-52.93	13.8	0.33
52	SLU 56	323	49	3985	-31.8	14.53	0.74
52	SLU 57	325	59	4184	-44.88	14.58	0.5
52	SLU 58	324	49	3970	-31.57	14.62	0.74
52	SLU 59	326	59	4169	-44.64	14.67	0.5
52	SLU 60	298	49	4075	-31.89	13.25	0.75
52	SLU 61	301	59	4273	-44.96	13.3	0.51
52	SLU 62	316	50	4107	-32.31	14.15	0.76
52	SLU 63	318	60	4305	-45.39	14.2	0.52
52	SLU 64	287	47	3844	-30.63	12.76	0.71
52	SLU 65	291	64	4175	-52.42	12.84	0.31
52	SLU 66	304	48	3891	-31.29	13.58	0.73
52	SLU 67	306	58	4090	-44.36	13.63	0.49
52	SLU 68	309	64	4207	-52.84	13.74	0.32
52	SLU 69	321	49	3923	-31.71	14.48	0.74
52	SLU 70	324	59	4122	-44.79	14.53	0.5
52	SLU 71	323	49	3908	-31.48	14.56	0.73
52	SLU 72	325	58	4107	-44.55	14.61	0.49
52	SLU 73	313	68	4569	-55.15	13.85	0.39
52	SLU 74	326	53	4284	-34.01	14.59	0.8
52	SLU 75	328	63	4483	-47.09	14.64	0.56
52	SLU 76	331	69	4600	-55.57	14.75	0.4

Nodo	Cont.	Reazione a traslazione			Reazione a rotazione		
Ind.	N.br.	x	y	z	x	y	z
52	SLU 77	344	53	4316	-34.44	15.49	0.81
52	SLU 78	346	63	4515	-47.51	15.54	0.57
52	SLU 79	345	53	4301	-34.21	15.57	0.81
52	SLU 80	347	63	4500	-47.28	15.62	0.57
52	SLU 81	319	54	4406	-34.53	14.2	0.82
52	SLU 82	321	63	4605	-47.6	14.25	0.58
52	SLU 83	337	54	4438	-34.95	15.1	0.83
52	SLU 84	339	64	4636	-48.02	15.15	0.59
52	SLE RA 1	216	35	2884	-22.98	9.6	0.53
52	SLE RA 2	219	46	3105	-37.51	9.66	0.27
52	SLE RA 3	227	36	2916	-23.42	10.15	0.54
52	SLE RA 4	229	43	3048	-32.14	10.18	0.38
52	SLE RA 5	231	47	3126	-37.79	10.26	0.27
52	SLE RA 6	239	37	2937	-23.7	10.75	0.55
52	SLE RA 7	241	43	3069	-32.42	10.78	0.39
52	SLE RA 8	240	36	2927	-23.55	10.81	0.55
52	SLE RA 9	241	43	3059	-32.26	10.84	0.39
52	SLE RA 10	234	49	3367	-39.33	10.33	0.32
52	SLE RA 11	242	39	3178	-25.24	10.82	0.59
52	SLE RA 12	244	46	3310	-33.95	10.86	0.43
52	SLE RA 13	246	50	3388	-39.61	10.93	0.32
52	SLE RA 14	254	40	3199	-25.52	11.43	0.6
52	SLE RA 15	255	46	3332	-34.24	11.46	0.44
52	SLE RA 16	255	39	3189	-25.37	11.48	0.6
52	SLE RA 17	256	46	3321	-34.08	11.51	0.44
52	SLE RA 18	238	40	3259	-25.58	10.57	0.61
52	SLE RA 19	239	46	3391	-34.29	10.6	0.44
52	SLE RA 20	249	40	3280	-25.86	11.17	0.61
52	SLE RA 21	251	47	3412	-34.58	11.2	0.45
52	SLE FR 1	216	35	2884	-22.98	9.6	0.53
52	SLE FR 2	217	38	2928	-25.89	9.62	0.48
52	SLE FR 3	221	36	2893	-23.1	9.85	0.54
52	SLE FR 4	223	39	3041	-26.67	9.9	0.5
52	SLE FR 5	228	37	3005	-23.87	10.13	0.56
52	SLE FR 6	227	38	3071	-24.28	10.09	0.57
52	SLE QP 1	216	35	2884	-22.98	9.6	0.53
52	SLE QP 2	223	37	2996	-23.76	9.89	0.56
52	SLD 1	1335	57	3439	-46.6	67.83	0.12
52	SLD 2	1335	57	3439	-46.6	67.83	0.12
52	SLD 3	1255	34	3211	-20.14	64.04	0.57
52	SLD 4	1255	34	3211	-20.14	64.04	0.57
52	SLD 5	678	78	3475	-70.74	33.03	-0.25
52	SLD 6	678	78	3475	-70.74	33.03	-0.25
52	SLD 7	411	1	2715	17.46	20.38	1.24
52	SLD 8	411	1	2715	17.46	20.38	1.24
52	SLD 9	34	73	3278	-64.98	-0.6	-0.13
52	SLD 10	34	73	3278	-64.98	-0.6	-0.13
52	SLD 11	-232	-5	2518	23.22	-13.24	1.37
52	SLD 12	-232	-5	2518	23.22	-13.24	1.37
52	SLD 13	-809	39	2782	-27.38	-44.25	0.54
52	SLD 14	-809	39	2782	-27.38	-44.25	0.54
52	SLD 15	-889	16	2554	-0.92	-48.04	0.99
52	SLD 16	-889	16	2554	-0.92	-48.04	0.99
52	SLV 1	2763	88	4020	-80.3	142.2	-0.51
52	SLV 2	2763	88	4020	-80.3	142.2	-0.51
52	SLV 3	2569	30	3479	-14.61	132.98	0.61
52	SLV 4	2569	30	3479	-14.61	132.98	0.61
52	SLV 5	1279	139	4123	-140.34	63.56	-1.47
52	SLV 6	1279	139	4123	-140.34	63.56	-1.47
52	SLV 7	632	-53	2322	78.6	32.84	2.27
52	SLV 8	632	-53	2322	78.6	32.84	2.27
52	SLV 9	-186	126	3671	-126.13	-13.05	-1.16
52	SLV 10	-186	126	3671	-126.13	-13.05	-1.16
52	SLV 11	-834	-66	1870	92.82	-43.78	2.58
52	SLV 12	-834	-66	1870	92.82	-43.78	2.58
52	SLV 13	-2123	43	2514	-32.91	-113.2	0.5
52	SLV 14	-2123	43	2514	-32.91	-113.2	0.5
52	SLV 15	-2317	-14	1973	32.77	-122.41	1.62
52	SLV 16	-2317	-14	1973	32.77	-122.41	1.62
53	SLU 1	136	38	2909	-24.91	6.01	-0.07
53	SLU 2	96	49	3294	-42.17	4.27	0.42
53	SLU 3	152	39	2959	-25.64	6.68	-0.07
53	SLU 4	127	46	3189	-35.99	5.64	0.22
53	SLU 5	113	50	3326	-42.64	5.04	0.41
53	SLU 6	169	40	2991	-26.11	7.44	-0.07
53	SLU 7	145	47	3222	-36.46	6.4	0.22
53	SLU 8	172	39	2975	-25.85	7.54	-0.07
53	SLU 9	147	46	3205	-36.2	6.5	0.22
53	SLU 10	105	54	3708	-45.32	4.7	0.4
53	SLU 11	162	44	3372	-28.79	7.11	-0.08
53	SLU 12	137	51	3603	-39.14	6.07	0.21
53	SLU 13	123	55	3740	-45.79	5.47	0.4
53	SLU 14	179	44	3405	-29.26	7.88	-0.08
53	SLU 15	155	52	3636	-39.61	6.84	0.21
53	SLU 16	181	44	3388	-29	7.97	-0.08
53	SLU 17	157	51	3619	-39.35	6.93	0.21
53	SLU 18	150	45	3501	-29.41	6.63	-0.09
53	SLU 19	126	52	3731	-39.77	5.59	0.2
53	SLU 20	168	45	3533	-29.88	7.39	-0.09
53	SLU 21	143	53	3764	-40.24	6.35	0.2
53	SLU 22	146	42	3258	-27.93	6.44	-0.08

Nodo	Cont.	Reazione a traslazione			Reazione a rotazione		
Ind.	N.br.	x	y	z	x	y	z
53	SLU 23	105	54	3643	-45.19	4.7	0.4
53	SLU 24	162	44	3307	-28.66	7.11	-0.08
53	SLU 25	137	51	3538	-39.01	6.07	0.21
53	SLU 26	123	55	3675	-45.66	5.47	0.4
53	SLU 27	179	44	3340	-29.13	7.88	-0.08
53	SLU 28	155	51	3571	-39.48	6.84	0.21
53	SLU 29	181	44	3324	-28.87	7.97	-0.08
53	SLU 30	157	51	3554	-39.22	6.93	0.21
53	SLU 31	115	59	4057	-48.34	5.14	0.39
53	SLU 32	171	48	3721	-31.81	7.55	-0.09
53	SLU 33	147	55	3952	-42.16	6.5	0.2
53	SLU 34	133	60	4089	-48.81	5.9	0.39
53	SLU 35	189	49	3754	-32.28	8.31	-0.09
53	SLU 36	164	56	3985	-42.63	7.27	0.2
53	SLU 37	191	49	3737	-32.02	8.41	-0.09
53	SLU 38	167	56	3968	-42.37	7.36	0.2
53	SLU 39	160	49	3849	-32.43	7.06	-0.1
53	SLU 40	136	56	4080	-42.79	6.02	0.19
53	SLU 41	178	50	3882	-32.9	7.83	-0.1
53	SLU 42	153	57	4113	-43.25	6.79	0.19
53	SLU 43	174	47	3663	-31.35	7.66	-0.08
53	SLU 44	133	59	4047	-48.61	5.92	0.4
53	SLU 45	189	49	3712	-32.08	8.33	-0.08
53	SLU 46	165	56	3942	-42.43	7.29	0.21
53	SLU 47	151	60	4080	-49.08	6.69	0.4
53	SLU 48	207	49	3744	-32.55	9.1	-0.08
53	SLU 49	183	56	3975	-42.9	8.06	0.21
53	SLU 50	209	49	3728	-32.29	9.19	-0.08
53	SLU 51	185	56	3959	-42.64	8.15	0.21
53	SLU 52	143	64	4461	-51.76	6.36	0.39
53	SLU 53	199	53	4126	-35.23	8.77	-0.1
53	SLU 54	175	61	4356	-45.58	7.72	0.19
53	SLU 55	161	65	4493	-52.23	7.12	0.39
53	SLU 56	217	54	4158	-35.7	9.53	-0.1
53	SLU 57	192	61	4389	-46.05	8.49	0.19
53	SLU 58	219	54	4142	-35.44	9.63	-0.1
53	SLU 59	194	61	4372	-45.79	8.58	0.19
53	SLU 60	188	54	4254	-35.85	8.28	-0.1
53	SLU 61	163	62	4484	-46.21	7.24	0.19
53	SLU 62	205	55	4286	-36.32	9.05	-0.1
53	SLU 63	181	62	4517	-46.67	8.01	0.19
53	SLU 64	184	52	4012	-34.37	8.1	-0.09
53	SLU 65	143	64	4396	-51.63	6.36	0.39
53	SLU 66	199	53	4061	-35.1	8.77	-0.09
53	SLU 67	175	60	4291	-45.45	7.72	0.19
53	SLU 68	161	65	4429	-52.1	7.12	0.39
53	SLU 69	217	54	4093	-35.57	9.53	-0.09
53	SLU 70	192	61	4324	-45.92	8.49	0.19
53	SLU 71	219	54	4077	-35.31	9.63	-0.09
53	SLU 72	195	61	4307	-45.66	8.58	0.19
53	SLU 73	153	69	4810	-54.78	6.79	0.37
53	SLU 74	209	58	4474	-38.25	9.2	-0.11
53	SLU 75	184	65	4705	-48.6	8.16	0.18
53	SLU 76	170	69	4842	-55.25	7.56	0.37
53	SLU 77	227	59	4507	-38.72	9.97	-0.11
53	SLU 78	202	66	4738	-49.07	8.92	0.18
53	SLU 79	229	58	4491	-38.46	10.06	-0.11
53	SLU 80	204	66	4721	-48.81	9.02	0.18
53	SLU 81	198	59	4603	-38.87	8.72	-0.11
53	SLU 82	173	66	4833	-49.23	7.67	0.18
53	SLU 83	215	60	4635	-39.34	9.48	-0.11
53	SLU 84	191	67	4866	-49.69	8.44	0.17
53	SLE RA 1	139	39	3009	-25.78	6.13	-0.07
53	SLE RA 2	112	47	3265	-37.28	4.97	0.25
53	SLE RA 3	149	40	3042	-26.26	6.58	-0.07
53	SLE RA 4	133	45	3196	-33.16	5.88	0.12
53	SLE RA 5	124	47	3287	-37.59	5.48	0.25
53	SLE RA 6	161	40	3064	-26.57	7.09	-0.07
53	SLE RA 7	145	45	3217	-33.48	6.39	0.12
53	SLE RA 8	163	40	3053	-26.4	7.15	-0.07
53	SLE RA 9	146	45	3206	-33.3	6.46	0.12
53	SLE RA 10	118	50	3541	-39.38	5.26	0.24
53	SLE RA 11	156	43	3318	-28.36	6.87	-0.08
53	SLE RA 12	140	48	3471	-35.26	6.17	0.11
53	SLE RA 13	130	51	3563	-39.69	5.77	0.24
53	SLE RA 14	168	44	3339	-28.67	7.38	-0.08
53	SLE RA 15	151	48	3493	-35.58	6.68	0.11
53	SLE RA 16	169	43	3328	-28.5	7.44	-0.08
53	SLE RA 17	153	48	3482	-35.4	6.75	0.11
53	SLE RA 18	148	44	3403	-28.78	6.55	-0.08
53	SLE RA 19	132	48	3557	-35.68	5.85	0.11
53	SLE RA 20	160	44	3425	-29.09	7.06	-0.08
53	SLE RA 21	144	49	3579	-35.99	6.36	0.11
53	SLE FR 1	139	39	3009	-25.78	6.13	-0.07
53	SLE FR 2	134	41	3060	-28.08	5.9	0
53	SLE FR 3	144	39	3018	-25.9	6.34	-0.07
53	SLE FR 4	137	42	3179	-28.98	6.03	-0.01
53	SLE FR 5	147	41	3136	-26.8	6.46	-0.07
53	SLE FR 6	144	41	3206	-27.28	6.34	-0.08
53	SLE QP 1	139	39	3009	-25.78	6.13	-0.07
53	SLE QP 2	142	40	3127	-26.68	6.26	-0.07

Nodo	Cont.	Reazione a traslazione			Reazione a rotazione		
Ind.	N.br.	x	y	z	x	y	z
53	SLD 1	1341	57	3471	-44.86	58.17	0.44
53	SLD 2	1341	57	3471	-44.86	58.17	0.44
53	SLD 3	1263	38	3223	-23.23	54.77	-0.12
53	SLD 4	1263	38	3223	-23.23	54.77	-0.12
53	SLD 5	621	74	3606	-64.95	26.99	0.93
53	SLD 6	621	74	3606	-64.95	26.99	0.93
53	SLD 7	359	12	2780	7.17	15.65	-0.94
53	SLD 8	359	12	2780	7.17	15.65	-0.94
53	SLD 9	-75	69	3474	-60.52	-3.14	0.79
53	SLD 10	-75	69	3474	-60.52	-3.14	0.79
53	SLD 11	-337	7	2649	11.59	-14.48	-1.08
53	SLD 12	-337	7	2649	11.59	-14.48	-1.08
53	SLD 13	-979	43	3032	-30.12	-42.26	-0.03
53	SLD 14	-979	43	3032	-30.12	-42.26	-0.03
53	SLD 15	-1058	24	2784	-8.49	-45.66	-0.59
53	SLD 16	-1058	24	2784	-8.49	-45.66	-0.59
53	SLV 1	2881	80	3931	-71.69	124.78	1.21
53	SLV 2	2881	80	3931	-71.69	124.78	1.21
53	SLV 3	2691	34	3340	-18.19	116.57	-0.2
53	SLV 4	2691	34	3340	-18.19	116.57	-0.2
53	SLV 5	1251	121	4265	-121.33	54.27	2.44
53	SLV 6	1251	121	4265	-121.33	54.27	2.44
53	SLV 7	620	-31	2294	57.02	26.89	-2.24
53	SLV 8	620	-31	2294	57.02	26.89	-2.24
53	SLV 9	-336	111	3960	-110.37	-14.38	2.09
53	SLV 10	-336	111	3960	-110.37	-14.38	2.09
53	SLV 11	-967	-40	1989	67.98	-41.75	-2.58
53	SLV 12	-967	-40	1989	67.98	-41.75	-2.58
53	SLV 13	-2407	47	2915	-35.17	-104.05	0.05
53	SLV 14	-2407	47	2915	-35.17	-104.05	0.05
53	SLV 15	-2597	1	2323	18.34	-112.26	-1.35
53	SLV 16	-2597	1	2323	18.34	-112.26	-1.35
54	SLU 1	114	40	2994	-28.29	4.05	-0.04
54	SLU 2	62	48	3383	-40.92	0.59	-0.63
54	SLU 3	128	41	3044	-29.1	4.76	-0.04
54	SLU 4	97	46	3277	-36.69	2.69	-0.4
54	SLU 5	78	49	3415	-41.45	1.45	-0.64
54	SLU 6	144	42	3076	-29.63	5.62	-0.04
54	SLU 7	113	47	3309	-37.21	3.55	-0.4
54	SLU 8	146	41	3059	-29.34	5.77	-0.04
54	SLU 9	115	46	3292	-36.92	3.7	-0.4
54	SLU 10	69	53	3804	-44.57	0.61	-0.63
54	SLU 11	134	46	3465	-32.75	4.78	-0.04
54	SLU 12	104	51	3698	-40.33	2.7	-0.4
54	SLU 13	85	54	3837	-45.09	1.47	-0.64
54	SLU 14	151	47	3498	-33.27	5.64	-0.04
54	SLU 15	120	52	3731	-40.85	3.56	-0.4
54	SLU 16	153	47	3480	-32.98	5.79	-0.04
54	SLU 17	122	51	3714	-40.56	3.71	-0.4
54	SLU 18	123	47	3596	-33.49	4.07	-0.04
54	SLU 19	93	52	3829	-41.07	2	-0.4
54	SLU 20	140	48	3629	-34.02	4.93	-0.04
54	SLU 21	109	53	3862	-41.6	2.86	-0.4
54	SLU 22	120	45	3349	-31.76	4.08	-0.04
54	SLU 23	69	53	3738	-44.4	0.63	-0.64
54	SLU 24	134	46	3399	-32.58	4.8	-0.04
54	SLU 25	103	51	3632	-40.16	2.72	-0.4
54	SLU 26	85	54	3770	-44.93	1.49	-0.64
54	SLU 27	150	47	3431	-33.11	5.66	-0.05
54	SLU 28	120	51	3664	-40.69	3.58	-0.4
54	SLU 29	153	46	3414	-32.82	5.81	-0.05
54	SLU 30	122	51	3647	-40.4	3.73	-0.4
54	SLU 31	76	58	4159	-48.04	0.64	-0.64
54	SLU 32	141	51	3820	-36.22	4.81	-0.04
54	SLU 33	110	56	4053	-43.8	2.74	-0.4
54	SLU 34	92	59	4192	-48.57	1.5	-0.64
54	SLU 35	157	52	3852	-36.75	5.67	-0.05
54	SLU 36	126	57	4086	-44.33	3.6	-0.4
54	SLU 37	159	52	3835	-36.46	5.82	-0.04
54	SLU 38	129	56	4069	-44.04	3.75	-0.4
54	SLU 39	130	52	3951	-36.97	4.11	-0.04
54	SLU 40	99	57	4184	-44.55	2.03	-0.4
54	SLU 41	146	53	3983	-37.49	4.97	-0.04
54	SLU 42	115	58	4217	-45.08	2.89	-0.4
54	SLU 43	146	50	3771	-35.58	5.25	-0.05
54	SLU 44	94	58	4160	-48.22	1.8	-0.65
54	SLU 45	160	51	3821	-36.4	5.96	-0.05
54	SLU 46	129	56	4054	-43.98	3.89	-0.41
54	SLU 47	110	59	4192	-48.74	2.66	-0.65
54	SLU 48	176	52	3853	-36.92	6.82	-0.06
54	SLU 49	145	57	4086	-44.51	4.75	-0.41
54	SLU 50	178	52	3836	-36.63	6.97	-0.06
54	SLU 51	147	56	4069	-44.22	4.9	-0.41
54	SLU 52	101	63	4581	-51.86	1.81	-0.65
54	SLU 53	166	56	4242	-40.04	5.98	-0.05
54	SLU 54	135	61	4475	-47.62	3.91	-0.41
54	SLU 55	117	64	4613	-52.39	2.67	-0.65
54	SLU 56	183	57	4274	-40.57	6.84	-0.06
54	SLU 57	152	62	4507	-48.15	4.77	-0.41
54	SLU 58	185	57	4257	-40.28	6.99	-0.06
54	SLU 59	154	62	4490	-47.86	4.91	-0.41

Nodo	Cont.	Reazione a traslazione			Reazione a rotazione		
Ind.	N.br.	x	y	z	x	y	z
54	SLU 60	155	58	4373	-40.79	5.27	-0.05
54	SLU 61	124	62	4606	-48.37	3.2	-0.41
54	SLU 62	171	58	4405	-41.31	6.13	-0.05
54	SLU 63	141	63	4638	-48.89	4.06	-0.41
54	SLU 64	152	55	4126	-39.06	5.29	-0.05
54	SLU 65	101	63	4514	-51.69	1.83	-0.65
54	SLU 66	166	56	4175	-39.87	6	-0.06
54	SLU 67	135	61	4409	-47.46	3.93	-0.41
54	SLU 68	117	64	4547	-52.22	2.69	-0.65
54	SLU 69	182	57	4208	-40.4	6.86	-0.06
54	SLU 70	151	62	4441	-47.98	4.79	-0.41
54	SLU 71	185	57	4191	-40.11	7.01	-0.06
54	SLU 72	154	61	4424	-47.69	4.93	-0.41
54	SLU 73	108	68	4936	-55.34	1.85	-0.65
54	SLU 74	173	61	4597	-43.52	6.01	-0.06
54	SLU 75	142	66	4830	-51.1	3.94	-0.41
54	SLU 76	124	69	4968	-55.86	2.71	-0.65
54	SLU 77	189	62	4629	-44.04	6.88	-0.06
54	SLU 78	158	67	4862	-51.63	4.8	-0.41
54	SLU 79	191	62	4612	-43.75	7.02	-0.06
54	SLU 80	160	67	4845	-51.33	4.95	-0.41
54	SLU 81	162	63	4728	-44.26	5.31	-0.05
54	SLU 82	131	67	4961	-51.84	3.23	-0.41
54	SLU 83	178	63	4760	-44.79	6.17	-0.05
54	SLU 84	147	68	4993	-52.37	4.1	-0.41
54	SLE RA 1	116	41	3096	-29.28	4.06	-0.04
54	SLE RA 2	81	47	3355	-37.7	1.76	-0.44
54	SLE RA 3	125	42	3129	-29.83	4.53	-0.04
54	SLE RA 4	104	45	3284	-34.88	3.15	-0.28
54	SLE RA 5	92	47	3376	-38.05	2.33	-0.44
54	SLE RA 6	136	43	3150	-30.18	5.11	-0.04
54	SLE RA 7	115	46	3306	-35.23	3.73	-0.28
54	SLE RA 8	137	42	3139	-29.98	5.21	-0.04
54	SLE RA 9	117	45	3294	-35.04	3.82	-0.28
54	SLE RA 10	86	50	3636	-40.13	1.77	-0.44
54	SLE RA 11	129	46	3410	-32.25	4.54	-0.04
54	SLE RA 12	109	49	3565	-37.31	3.16	-0.28
54	SLE RA 13	97	51	3657	-40.48	2.34	-0.44
54	SLE RA 14	140	46	3431	-32.6	5.12	-0.04
54	SLE RA 15	120	49	3587	-37.66	3.74	-0.28
54	SLE RA 16	142	46	3420	-32.41	5.22	-0.04
54	SLE RA 17	121	49	3575	-37.47	3.83	-0.28
54	SLE RA 18	122	46	3497	-32.75	4.07	-0.04
54	SLE RA 19	102	49	3652	-37.8	2.69	-0.28
54	SLE RA 20	133	47	3519	-33.1	4.65	-0.04
54	SLE RA 21	112	50	3674	-38.15	3.26	-0.28
54	SLE FR 1	116	41	3096	-29.28	4.06	-0.04
54	SLE FR 2	109	42	3148	-30.97	3.6	-0.12
54	SLE FR 3	120	41	3104	-29.42	4.29	-0.04
54	SLE FR 4	111	44	3268	-32.01	3.6	-0.12
54	SLE FR 5	122	43	3225	-30.46	4.29	-0.04
54	SLE FR 6	119	44	3296	-31.02	4.07	-0.04
54	SLE QP 1	116	41	3096	-29.28	4.06	-0.04
54	SLE QP 2	118	43	3216	-30.32	4.06	-0.04
54	SLD 1	1232	55	3494	-44.14	66.85	-0.68
54	SLD 2	1232	55	3494	-44.14	66.85	-0.68
54	SLD 3	1152	40	3213	-27.18	62.47	0.02
54	SLD 4	1152	40	3213	-27.18	62.47	0.02
54	SLD 5	574	69	3725	-60.19	29.55	-1.3
54	SLD 6	574	69	3725	-60.19	29.55	-1.3
54	SLD 7	306	19	2790	-3.66	14.94	1.05
54	SLD 8	306	19	2790	-3.66	14.94	1.05
54	SLD 9	-71	66	3643	-56.98	-6.81	-1.13
54	SLD 10	-71	66	3643	-56.98	-6.81	-1.13
54	SLD 11	-339	16	2707	-0.46	-21.42	1.22
54	SLD 12	-339	16	2707	-0.46	-21.42	1.22
54	SLD 13	-917	46	3219	-33.46	-54.34	-0.11
54	SLD 14	-917	46	3219	-33.46	-54.34	-0.11
54	SLD 15	-997	31	2939	-16.5	-58.73	0.6
54	SLD 16	-997	31	2939	-16.5	-58.73	0.6
54	SLV 1	2662	72	3879	-64.44	147.42	-1.63
54	SLV 2	2662	72	3879	-64.44	147.42	-1.63
54	SLV 3	2470	36	3205	-22.78	136.83	0.14
54	SLV 4	2470	36	3205	-22.78	136.83	0.14
54	SLV 5	1174	107	4436	-103.73	63.14	-3.19
54	SLV 6	1174	107	4436	-103.73	63.14	-3.19
54	SLV 7	531	-15	2192	35.11	27.82	2.68
54	SLV 8	531	-15	2192	35.11	27.82	2.68
54	SLV 9	-295	100	4240	-95.76	-19.69	-2.76
54	SLV 10	-295	100	4240	-95.76	-19.69	-2.76
54	SLV 11	-938	-21	1996	43.09	-55.02	3.1
54	SLV 12	-938	-21	1996	43.09	-55.02	3.1
54	SLV 13	-2234	50	3227	-37.86	-128.7	-0.22
54	SLV 14	-2234	50	3227	-37.86	-128.7	-0.22
54	SLV 15	-2427	13	2553	3.8	-139.3	1.54
54	SLV 16	-2427	13	2553	3.8	-139.3	1.54
55	SLU 1	32	45	3106	-29.12	1.47	0.91
55	SLU 2	-56	48	3520	-38.52	-2.26	1.04
55	SLU 3	44	47	3158	-29.96	2.06	0.93
55	SLU 4	-8	49	3406	-35.6	-0.18	1.01
55	SLU 5	-40	49	3553	-39.06	-1.52	1.06

Nodo	Cont.	Reazione a traslazione			Reazione a rotazione		
Ind.	N.br.	x	y	z	x	y	z
55	SLU 6	60	48	3191	-30.5	2.8	0.95
55	SLU 7	7	49	3439	-36.14	0.57	1.03
55	SLU 8	63	47	3173	-30.2	2.96	0.94
55	SLU 9	10	49	3421	-35.84	0.72	1.02
55	SLU 10	-61	54	3959	-42.3	-2.5	1.16
55	SLU 11	39	53	3597	-33.74	1.82	1.05
55	SLU 12	-14	55	3845	-39.38	-0.41	1.13
55	SLU 13	-46	55	3992	-42.84	-1.75	1.18
55	SLU 14	54	54	3631	-34.28	2.57	1.07
55	SLU 15	1	55	3879	-39.92	0.33	1.15
55	SLU 16	57	53	3612	-33.98	2.72	1.06
55	SLU 17	5	55	3860	-39.62	0.49	1.14
55	SLU 18	24	54	3734	-34.52	1.13	1.08
55	SLU 19	-29	56	3982	-40.16	-1.11	1.16
55	SLU 20	40	55	3767	-35.06	1.88	1.09
55	SLU 21	-13	57	4015	-40.7	-0.36	1.17
55	SLU 22	27	51	3477	-32.72	1.25	1.02
55	SLU 23	-61	54	3890	-42.12	-2.48	1.16
55	SLU 24	39	52	3529	-33.56	1.84	1.05
55	SLU 25	-14	54	3776	-39.2	-0.39	1.13
55	SLU 26	-46	55	3923	-42.66	-1.73	1.17
55	SLU 27	54	53	3562	-34.1	2.59	1.06
55	SLU 28	1	55	3810	-39.74	0.35	1.14
55	SLU 29	57	53	3543	-33.8	2.74	1.05
55	SLU 30	5	55	3791	-39.44	0.51	1.14
55	SLU 31	-67	60	4329	-45.9	-2.71	1.27
55	SLU 32	33	58	3968	-37.34	1.61	1.17
55	SLU 33	-20	60	4216	-42.98	-0.63	1.25
55	SLU 34	-52	61	4363	-46.44	-1.97	1.29
55	SLU 35	48	59	4001	-37.88	2.36	1.18
55	SLU 36	-4	61	4249	-43.52	0.12	1.26
55	SLU 37	52	59	3983	-37.58	2.51	1.17
55	SLU 38	-1	61	4231	-43.22	0.27	1.25
55	SLU 39	19	60	4104	-38.12	0.92	1.19
55	SLU 40	-34	61	4352	-43.76	-1.32	1.27
55	SLU 41	34	61	4138	-38.66	1.66	1.21
55	SLU 42	-19	62	4386	-44.3	-0.57	1.29
55	SLU 43	44	57	3911	-36.62	1.98	1.14
55	SLU 44	-44	60	4325	-46.02	-1.75	1.27
55	SLU 45	56	58	3963	-37.46	2.57	1.17
55	SLU 46	3	60	4211	-43.1	0.33	1.25
55	SLU 47	-29	61	4358	-46.56	-1	1.29
55	SLU 48	71	59	3996	-38	3.32	1.18
55	SLU 49	19	61	4244	-43.64	1.08	1.26
55	SLU 50	75	59	3978	-37.7	3.47	1.17
55	SLU 51	22	61	4226	-43.34	1.23	1.25
55	SLU 52	-50	66	4764	-49.8	-1.98	1.39
55	SLU 53	50	64	4402	-41.24	2.34	1.29
55	SLU 54	-3	66	4650	-46.88	0.1	1.37
55	SLU 55	-34	67	4797	-50.34	-1.24	1.41
55	SLU 56	66	65	4436	-41.78	3.08	1.3
55	SLU 57	13	67	4683	-47.42	0.85	1.38
55	SLU 58	69	65	4417	-41.48	3.24	1.29
55	SLU 59	16	67	4665	-47.12	1	1.37
55	SLU 60	36	66	4539	-42.02	1.64	1.31
55	SLU 61	-17	67	4787	-47.66	-0.59	1.39
55	SLU 62	51	67	4572	-42.56	2.39	1.33
55	SLU 63	-2	68	4820	-48.2	0.15	1.41
55	SLU 64	38	63	4282	-40.22	1.77	1.25
55	SLU 65	-50	66	4695	-49.63	-1.96	1.39
55	SLU 66	50	64	4333	-41.06	2.36	1.28
55	SLU 67	-2	66	4581	-46.7	0.12	1.36
55	SLU 68	-34	67	4728	-50.16	-1.22	1.41
55	SLU 69	66	65	4367	-41.6	3.1	1.3
55	SLU 70	13	67	4615	-47.24	0.87	1.38
55	SLU 71	69	65	4348	-41.3	3.26	1.29
55	SLU 72	16	66	4596	-46.94	1.02	1.37
55	SLU 73	-55	72	5134	-53.41	-2.2	1.51
55	SLU 74	45	70	4773	-44.84	2.12	1.4
55	SLU 75	-8	72	5021	-50.48	-0.11	1.48
55	SLU 76	-40	73	5168	-53.94	-1.45	1.52
55	SLU 77	60	71	4806	-45.38	2.87	1.42
55	SLU 78	7	73	5054	-51.02	0.63	1.5
55	SLU 79	63	71	4788	-45.08	3.02	1.41
55	SLU 80	11	72	5036	-50.72	0.79	1.49
55	SLU 81	30	71	4909	-45.62	1.43	1.42
55	SLU 82	-23	73	5157	-51.26	-0.81	1.5
55	SLU 83	46	72	4943	-46.16	2.18	1.44
55	SLU 84	-7	74	5191	-51.8	-0.06	1.52
55	SLE RA 1	31	47	3212	-30.15	1.4	0.94
55	SLE RA 2	-28	49	3488	-36.42	-1.08	1.03
55	SLE RA 3	39	48	3247	-30.71	1.8	0.96
55	SLE RA 4	4	49	3412	-34.47	0.31	1.01
55	SLE RA 5	-18	50	3510	-36.78	-0.58	1.04
55	SLE RA 6	49	49	3269	-31.07	2.3	0.97
55	SLE RA 7	14	50	3434	-34.83	0.81	1.02
55	SLE RA 8	51	48	3257	-30.87	2.4	0.96
55	SLE RA 9	16	49	3422	-34.63	0.91	1.02
55	SLE RA 10	-32	53	3781	-38.94	-1.24	1.11
55	SLE RA 11	35	52	3540	-33.23	1.64	1.04
55	SLE RA 12	0	53	3705	-36.99	0.15	1.09

Nodo	Cont.	Reazione a traslazione			Reazione a rotazione		
Ind.	N.br.	x	y	z	x	y	z
55	SLE RA 13	-22	54	3803	-39.3	-0.74	1.12
55	SLE RA 14	45	53	3562	-33.59	2.14	1.05
55	SLE RA 15	10	54	3727	-37.35	0.65	1.1
55	SLE RA 16	47	52	3550	-33.39	2.24	1.04
55	SLE RA 17	12	53	3715	-37.15	0.75	1.1
55	SLE RA 18	25	53	3631	-33.75	1.18	1.05
55	SLE RA 19	-10	54	3796	-37.51	-0.31	1.11
55	SLE RA 20	36	53	3653	-34.11	1.68	1.06
55	SLE RA 21	0	55	3818	-37.87	0.19	1.12
55	SLE FR 1	31	47	3212	-30.15	1.4	0.94
55	SLE FR 2	19	47	3267	-31.4	0.91	0.96
55	SLE FR 3	35	47	3221	-30.29	1.6	0.94
55	SLE FR 4	17	49	3393	-32.48	0.84	0.99
55	SLE FR 5	33	49	3347	-31.37	1.54	0.98
55	SLE FR 6	28	50	3422	-31.95	1.29	1
55	SLE QP 1	31	47	3212	-30.15	1.4	0.94
55	SLE QP 2	29	49	3338	-31.23	1.34	0.97
55	SLD 1	1213	57	3415	-41.96	58.39	1.19
55	SLD 2	1213	57	3415	-41.96	58.39	1.19
55	SLD 3	1122	46	3075	-28.38	54.23	0.92
55	SLD 4	1122	46	3075	-28.38	54.23	0.92
55	SLD 5	523	68	3877	-55.04	24.77	1.44
55	SLD 6	523	68	3877	-55.04	24.77	1.44
55	SLD 7	218	31	2743	-9.78	10.89	0.55
55	SLD 8	218	31	2743	-9.78	10.89	0.55
55	SLD 9	-160	67	3932	-52.68	-8.21	1.39
55	SLD 10	-160	67	3932	-52.68	-8.21	1.39
55	SLD 11	-465	29	2799	-7.41	-22.09	0.5
55	SLD 12	-465	29	2799	-7.41	-22.09	0.5
55	SLD 13	-1064	52	3601	-34.07	-51.55	1.02
55	SLD 14	-1064	52	3601	-34.07	-51.55	1.02
55	SLD 15	-1155	40	3261	-20.5	-55.71	0.76
55	SLD 16	-1155	40	3261	-20.5	-55.71	0.76
55	SLV 1	2732	69	3512	-57.66	131.61	1.5
55	SLV 2	2732	69	3512	-57.66	131.61	1.5
55	SLV 3	2512	42	2692	-24.54	121.52	0.86
55	SLV 4	2512	42	2692	-24.54	121.52	0.86
55	SLV 5	1174	95	4634	-89.4	55.73	2.11
55	SLV 6	1174	95	4634	-89.4	55.73	2.11
55	SLV 7	440	6	1900	21.02	22.09	-0.04
55	SLV 8	440	6	1900	21.02	22.09	-0.04
55	SLV 9	-382	92	4776	-83.48	-19.41	1.98
55	SLV 10	-382	92	4776	-83.48	-19.41	1.98
55	SLV 11	-1116	2	2041	26.94	-53.05	-0.16
55	SLV 12	-1116	2	2041	26.94	-53.05	-0.16
55	SLV 13	-2454	56	3984	-37.92	-118.84	1.09
55	SLV 14	-2454	56	3984	-37.92	-118.84	1.09
55	SLV 15	-2674	29	3163	-4.79	-128.94	0.45
55	SLV 16	-2674	29	3163	-4.79	-128.94	0.45
56	SLU 1	-23	38	3195	-27.3	-1.15	-0.37
56	SLU 2	-126	39	3604	-32.17	-5.56	-0.51
56	SLU 3	-13	39	3248	-28.08	-0.69	-0.38
56	SLU 4	-74	40	3493	-31.01	-3.33	-0.47
56	SLU 5	-112	39	3638	-32.68	-4.92	-0.52
56	SLU 6	2	40	3281	-28.58	-0.06	-0.39
56	SLU 7	-60	40	3527	-31.51	-2.7	-0.47
56	SLU 8	6	40	3262	-28.3	0.11	-0.38
56	SLU 9	-56	40	3508	-31.23	-2.53	-0.47
56	SLU 10	-139	44	4056	-35.75	-6.07	-0.56
56	SLU 11	-25	45	3700	-31.65	-1.21	-0.43
56	SLU 12	-87	45	3945	-34.58	-3.85	-0.51
56	SLU 13	-124	44	4090	-36.25	-5.44	-0.57
56	SLU 14	-10	45	3733	-32.16	-0.57	-0.44
56	SLU 15	-72	45	3979	-35.08	-3.21	-0.52
56	SLU 16	-6	45	3714	-31.88	-0.4	-0.43
56	SLU 17	-68	45	3960	-34.8	-3.04	-0.52
56	SLU 18	-41	46	3840	-32.4	-1.89	-0.44
56	SLU 19	-103	46	4086	-35.33	-4.53	-0.52
56	SLU 20	-26	46	3874	-32.91	-1.26	-0.45
56	SLU 21	-88	47	4120	-35.83	-3.9	-0.53
56	SLU 22	-36	43	3576	-30.7	-1.67	-0.42
56	SLU 23	-138	43	3985	-35.58	-6.07	-0.56
56	SLU 24	-25	44	3629	-31.48	-1.21	-0.43
56	SLU 25	-86	44	3874	-34.41	-3.85	-0.51
56	SLU 26	-124	44	4019	-36.08	-5.44	-0.56
56	SLU 27	-10	45	3662	-31.98	-0.57	-0.44
56	SLU 28	-72	45	3908	-34.91	-3.21	-0.52
56	SLU 29	-6	45	3643	-31.7	-0.4	-0.43
56	SLU 30	-68	45	3889	-34.63	-3.04	-0.51
56	SLU 31	-151	49	4437	-39.15	-6.59	-0.61
56	SLU 32	-37	49	4081	-35.05	-1.72	-0.48
56	SLU 33	-99	50	4326	-37.98	-4.36	-0.56
56	SLU 34	-136	49	4471	-39.65	-5.95	-0.61
56	SLU 35	-22	50	4114	-35.56	-1.09	-0.48
56	SLU 36	-84	50	4360	-38.48	-3.73	-0.57
56	SLU 37	-18	50	4095	-35.28	-0.92	-0.48
56	SLU 38	-80	50	4341	-38.21	-3.56	-0.56
56	SLU 39	-53	51	4221	-35.8	-2.4	-0.49
56	SLU 40	-115	51	4467	-38.73	-5.05	-0.57
56	SLU 41	-38	51	4255	-36.31	-1.77	-0.49
56	SLU 42	-100	51	4501	-39.23	-4.41	-0.58

Nodo	Cont.	Reazione a traslazione			Reazione a rotazione		
Ind.	N.br.	x	y	z	x	y	z
56	SLU 43	-26	48	4023	-34.32	-1.32	-0.47
56	SLU 44	-129	48	4432	-39.2	-5.73	-0.61
56	SLU 45	-16	49	4076	-35.1	-0.86	-0.48
56	SLU 46	-77	49	4321	-38.03	-3.5	-0.56
56	SLU 47	-115	49	4466	-39.7	-5.09	-0.61
56	SLU 48	-1	50	4109	-35.6	-0.23	-0.48
56	SLU 49	-63	50	4355	-38.53	-2.87	-0.57
56	SLU 50	3	50	4090	-35.33	-0.06	-0.48
56	SLU 51	-59	50	4336	-38.25	-2.7	-0.56
56	SLU 52	-141	54	4884	-42.77	-6.24	-0.65
56	SLU 53	-28	54	4528	-38.68	-1.38	-0.53
56	SLU 54	-89	55	4773	-41.6	-4.02	-0.61
56	SLU 55	-127	54	4918	-43.28	-5.61	-0.66
56	SLU 56	-13	55	4561	-39.18	-0.74	-0.53
56	SLU 57	-75	55	4807	-42.11	-3.38	-0.62
56	SLU 58	-9	55	4542	-38.9	-0.57	-0.53
56	SLU 59	-71	55	4788	-41.83	-3.21	-0.61
56	SLU 60	-44	56	4668	-39.43	-2.06	-0.54
56	SLU 61	-105	56	4914	-42.35	-4.7	-0.62
56	SLU 62	-29	56	4702	-39.93	-1.43	-0.54
56	SLU 63	-91	56	4948	-42.86	-4.07	-0.63
56	SLU 64	-38	53	4404	-37.72	-1.84	-0.51
56	SLU 65	-141	53	4813	-42.6	-6.24	-0.65
56	SLU 66	-28	54	4457	-38.5	-1.38	-0.52
56	SLU 67	-89	54	4702	-41.43	-4.02	-0.61
56	SLU 68	-127	54	4847	-43.1	-5.61	-0.66
56	SLU 69	-13	55	4490	-39.01	-0.74	-0.53
56	SLU 70	-75	55	4736	-41.93	-3.38	-0.61
56	SLU 71	-9	55	4471	-38.73	-0.57	-0.53
56	SLU 72	-71	55	4717	-41.65	-3.21	-0.61
56	SLU 73	-153	58	5265	-46.17	-6.76	-0.7
56	SLU 74	-40	59	4909	-42.08	-1.89	-0.57
56	SLU 75	-101	59	5154	-45	-4.53	-0.66
56	SLU 76	-139	59	5299	-46.68	-6.12	-0.71
56	SLU 77	-25	60	4942	-42.58	-1.26	-0.58
56	SLU 78	-87	60	5188	-45.51	-3.9	-0.66
56	SLU 79	-21	60	4923	-42.3	-1.09	-0.58
56	SLU 80	-83	60	5169	-45.23	-3.73	-0.66
56	SLU 81	-56	60	5049	-42.83	-2.57	-0.58
56	SLU 82	-118	60	5295	-45.75	-5.22	-0.67
56	SLU 83	-41	61	5083	-43.33	-1.94	-0.59
56	SLU 84	-103	61	5329	-46.26	-4.58	-0.67
56	SLE RA 1	-27	40	3304	-28.27	-1.3	-0.38
56	SLE RA 2	-96	40	3577	-31.52	-4.24	-0.48
56	SLE RA 3	-20	41	3339	-28.79	-0.99	-0.39
56	SLE RA 4	-61	41	3503	-30.74	-2.75	-0.45
56	SLE RA 5	-86	40	3599	-31.86	-3.81	-0.48
56	SLE RA 6	-10	41	3361	-29.13	-0.57	-0.4
56	SLE RA 7	-51	41	3525	-31.08	-2.33	-0.45
56	SLE RA 8	-7	41	3349	-28.94	-0.46	-0.39
56	SLE RA 9	-48	41	3512	-30.89	-2.22	-0.45
56	SLE RA 10	-104	43	3878	-33.9	-4.58	-0.51
56	SLE RA 11	-28	44	3640	-31.17	-1.34	-0.42
56	SLE RA 12	-69	44	3804	-33.12	-3.1	-0.48
56	SLE RA 13	-94	44	3900	-34.24	-4.16	-0.51
56	SLE RA 14	-18	44	3663	-31.51	-0.91	-0.43
56	SLE RA 15	-59	44	3827	-33.46	-2.67	-0.48
56	SLE RA 16	-15	44	3650	-31.32	-0.8	-0.43
56	SLE RA 17	-57	44	3814	-33.27	-2.56	-0.48
56	SLE RA 18	-38	45	3734	-31.67	-1.79	-0.43
56	SLE RA 19	-80	45	3898	-33.62	-3.55	-0.49
56	SLE RA 20	-29	45	3757	-32.01	-1.37	-0.44
56	SLE RA 21	-70	45	3920	-33.96	-3.13	-0.49
56	SLE FR 1	-27	40	3304	-28.27	-1.3	-0.38
56	SLE FR 2	-41	40	3358	-28.92	-1.89	-0.4
56	SLE FR 3	-23	40	3313	-28.4	-1.13	-0.39
56	SLE FR 4	-44	41	3487	-29.94	-2.04	-0.42
56	SLE FR 5	-26	41	3442	-29.42	-1.28	-0.4
56	SLE FR 6	-33	42	3519	-29.97	-1.55	-0.41
56	SLE QP 1	-27	40	3304	-28.27	-1.3	-0.38
56	SLE QP 2	-30	41	3433	-29.29	-1.45	-0.4
56	SLD 1	1084	47	3502	-31.54	46.76	-0.56
56	SLD 2	1084	47	3502	-31.54	46.76	-0.56
56	SLD 3	1185	39	3112	-22.86	51.17	-0.36
56	SLD 4	1185	39	3112	-22.86	51.17	-0.36
56	SLD 5	151	55	4045	-43.12	6.31	-0.75
56	SLD 6	151	55	4045	-43.12	6.31	-0.75
56	SLD 7	487	28	2745	-14.2	21.03	-0.08
56	SLD 8	487	28	2745	-14.2	21.03	-0.08
56	SLD 9	-548	54	4121	-44.38	-23.93	-0.71
56	SLD 10	-548	54	4121	-44.38	-23.93	-0.71
56	SLD 11	-212	27	2821	-15.46	-9.21	-0.04
56	SLD 12	-212	27	2821	-15.46	-9.21	-0.04
56	SLD 13	-1246	44	3754	-35.72	-54.07	-0.43
56	SLD 14	-1246	44	3754	-35.72	-54.07	-0.43
56	SLD 15	-1145	36	3364	-27.04	-49.65	-0.23
56	SLD 16	-1145	36	3364	-27.04	-49.65	-0.23
56	SLV 1	2501	54	3596	-34.41	108.01	-0.81
56	SLV 2	2501	54	3596	-34.41	108.01	-0.81
56	SLV 3	2746	36	2654	-13.57	118.76	-0.31
56	SLV 4	2746	36	2654	-13.57	118.76	-0.31

Nodo	Cont.	Reazione a traslazione			Reazione a rotazione		
Ind.	N.br.	x	y	z	x	y	z
56	SLV 5	358	73	4910	-62.43	15.07	-1.27
56	SLV 6	358	73	4910	-62.43	15.07	-1.27
56	SLV 7	1174	11	1771	7.04	50.93	0.38
56	SLV 8	1174	11	1771	7.04	50.93	0.38
56	SLV 9	-1234	71	5095	-65.61	-53.83	-1.17
56	SLV 10	-1234	71	5095	-65.61	-53.83	-1.17
56	SLV 11	-419	9	1956	3.85	-17.97	0.47
56	SLV 12	-419	9	1956	3.85	-17.97	0.47
56	SLV 13	-2807	47	4212	-45.01	-121.66	-0.49
56	SLV 14	-2807	47	4212	-45.01	-121.66	-0.49
56	SLV 15	-2562	28	3270	-24.17	-110.91	0.01
56	SLV 16	-2562	28	3270	-24.17	-110.91	0.01
57	SLU 1	-54	34	3321	-23.75	-3.38	-0.32
57	SLU 2	-179	29	3706	-25.47	-8.88	-0.43
57	SLU 3	-44	35	3376	-24.43	-2.94	-0.33
57	SLU 4	-119	32	3607	-25.46	-6.24	-0.39
57	SLU 5	-164	29	3741	-25.91	-8.23	-0.43
57	SLU 6	-29	36	3410	-24.87	-2.29	-0.33
57	SLU 7	-104	32	3642	-25.9	-5.59	-0.4
57	SLU 8	-25	35	3390	-24.63	-2.07	-0.33
57	SLU 9	-100	32	3622	-25.66	-5.37	-0.39
57	SLU 10	-192	33	4179	-28.61	-9.62	-0.47
57	SLU 11	-57	40	3848	-27.57	-3.68	-0.37
57	SLU 12	-132	36	4079	-28.6	-6.98	-0.43
57	SLU 13	-177	34	4214	-29.04	-8.96	-0.47
57	SLU 14	-42	40	3883	-28.01	-3.02	-0.37
57	SLU 15	-117	37	4114	-29.04	-6.32	-0.44
57	SLU 16	-38	40	3863	-27.77	-2.8	-0.37
57	SLU 17	-113	37	4094	-28.79	-6.11	-0.44
57	SLU 18	-72	41	3996	-28.24	-4.43	-0.38
57	SLU 19	-147	37	4227	-29.27	-7.73	-0.44
57	SLU 20	-58	41	4030	-28.67	-3.77	-0.38
57	SLU 21	-133	38	4262	-29.7	-7.08	-0.45
57	SLU 22	-68	38	3718	-26.74	-4.16	-0.36
57	SLU 23	-193	33	4104	-28.45	-9.67	-0.47
57	SLU 24	-58	39	3773	-27.42	-3.73	-0.37
57	SLU 25	-133	36	4004	-28.45	-7.03	-0.43
57	SLU 26	-179	34	4139	-28.89	-9.01	-0.47
57	SLU 27	-44	40	3808	-27.85	-3.07	-0.37
57	SLU 28	-119	37	4039	-28.88	-6.37	-0.44
57	SLU 29	-39	40	3788	-27.61	-2.86	-0.37
57	SLU 30	-114	36	4019	-28.64	-6.16	-0.43
57	SLU 31	-206	38	4576	-31.59	-10.4	-0.51
57	SLU 32	-71	44	4245	-30.55	-4.46	-0.41
57	SLU 33	-146	41	4477	-31.58	-7.76	-0.47
57	SLU 34	-192	38	4611	-32.03	-9.75	-0.51
57	SLU 35	-57	45	4280	-30.99	-3.81	-0.41
57	SLU 36	-132	41	4512	-32.02	-7.11	-0.48
57	SLU 37	-52	44	4260	-30.75	-3.59	-0.41
57	SLU 38	-127	41	4492	-31.78	-6.89	-0.47
57	SLU 39	-87	45	4393	-31.22	-5.22	-0.41
57	SLU 40	-162	42	4624	-32.25	-8.52	-0.48
57	SLU 41	-72	46	4428	-31.66	-4.56	-0.42
57	SLU 42	-147	42	4659	-32.69	-7.86	-0.49
57	SLU 43	-65	43	4181	-29.86	-4.12	-0.4
57	SLU 44	-190	37	4566	-31.57	-9.63	-0.51
57	SLU 45	-55	44	4236	-30.54	-3.68	-0.41
57	SLU 46	-130	41	4467	-31.57	-6.99	-0.47
57	SLU 47	-176	38	4601	-32.01	-8.97	-0.51
57	SLU 48	-41	45	4270	-30.97	-3.03	-0.41
57	SLU 49	-116	41	4502	-32	-6.33	-0.48
57	SLU 50	-36	44	4250	-30.73	-2.81	-0.41
57	SLU 51	-111	41	4482	-31.76	-6.12	-0.48
57	SLU 52	-203	42	5039	-34.71	-10.36	-0.55
57	SLU 53	-68	48	4708	-33.67	-4.42	-0.45
57	SLU 54	-143	45	4939	-34.7	-7.72	-0.51
57	SLU 55	-188	43	5074	-35.15	-9.71	-0.55
57	SLU 56	-54	49	4743	-34.11	-3.77	-0.46
57	SLU 57	-128	46	4974	-35.14	-7.07	-0.52
57	SLU 58	-49	49	4723	-33.87	-3.55	-0.45
57	SLU 59	-124	45	4954	-34.9	-6.85	-0.52
57	SLU 60	-83	49	4856	-34.34	-5.17	-0.46
57	SLU 61	-158	46	5087	-35.37	-8.48	-0.52
57	SLU 62	-69	50	4890	-34.78	-4.52	-0.46
57	SLU 63	-144	47	5122	-35.81	-7.82	-0.53
57	SLU 64	-80	47	4578	-32.84	-4.91	-0.44
57	SLU 65	-205	42	4964	-34.56	-10.41	-0.55
57	SLU 66	-70	48	4633	-33.52	-4.47	-0.45
57	SLU 67	-145	45	4864	-34.55	-7.77	-0.51
57	SLU 68	-190	42	4999	-34.99	-9.76	-0.55
57	SLU 69	-55	49	4668	-33.96	-3.82	-0.45
57	SLU 70	-130	46	4899	-34.99	-7.12	-0.52
57	SLU 71	-51	49	4648	-33.71	-3.6	-0.45
57	SLU 72	-126	45	4879	-34.74	-6.9	-0.52
57	SLU 73	-217	46	5436	-37.69	-11.15	-0.59
57	SLU 74	-82	53	5105	-36.66	-5.21	-0.49
57	SLU 75	-157	49	5337	-37.69	-8.51	-0.55
57	SLU 76	-203	47	5471	-38.13	-10.49	-0.59
57	SLU 77	-68	53	5140	-37.09	-4.55	-0.49
57	SLU 78	-143	50	5372	-38.12	-7.85	-0.56
57	SLU 79	-63	53	5120	-36.85	-4.33	-0.49

Nodo	Cont.	Reazione a traslazione			Reazione a rotazione		
Ind.	N.br.	x	y	z	x	y	z
57	SLU 80	-138	50	5351	-37.88	-7.64	-0.56
57	SLU 81	-98	54	5253	-37.32	-5.96	-0.5
57	SLU 82	-173	50	5484	-38.35	-9.26	-0.56
57	SLU 83	-83	54	5288	-37.76	-5.3	-0.5
57	SLU 84	-158	51	5519	-38.79	-8.61	-0.57
57	SLE RA 1	-58	35	3434	-24.61	-3.6	-0.33
57	SLE RA 2	-141	32	3691	-25.75	-7.27	-0.4
57	SLE RA 3	-51	36	3471	-25.06	-3.31	-0.33
57	SLE RA 4	-101	34	3625	-25.75	-5.51	-0.38
57	SLE RA 5	-132	32	3715	-26.04	-6.84	-0.4
57	SLE RA 6	-42	36	3494	-25.35	-2.87	-0.34
57	SLE RA 7	-92	34	3648	-26.04	-5.08	-0.38
57	SLE RA 8	-39	36	3481	-25.19	-2.73	-0.34
57	SLE RA 9	-89	34	3635	-25.88	-4.93	-0.38
57	SLE RA 10	-150	35	4006	-27.84	-7.76	-0.43
57	SLE RA 11	-60	39	3786	-27.15	-3.8	-0.36
57	SLE RA 12	-110	37	3940	-27.84	-6	-0.41
57	SLE RA 13	-140	35	4030	-28.13	-7.33	-0.43
57	SLE RA 14	-50	40	3809	-27.44	-3.37	-0.37
57	SLE RA 15	-100	37	3963	-28.13	-5.57	-0.41
57	SLE RA 16	-47	39	3796	-27.28	-3.22	-0.36
57	SLE RA 17	-97	37	3950	-27.97	-5.42	-0.41
57	SLE RA 18	-70	40	3884	-27.6	-4.3	-0.37
57	SLE RA 19	-120	38	4038	-28.28	-6.51	-0.41
57	SLE RA 20	-61	40	3907	-27.89	-3.87	-0.37
57	SLE RA 21	-111	38	4062	-28.57	-6.07	-0.41
57	SLE FR 1	-58	35	3434	-24.61	-3.6	-0.33
57	SLE FR 2	-75	35	3486	-24.84	-4.34	-0.34
57	SLE FR 3	-54	36	3444	-24.72	-3.43	-0.33
57	SLE FR 4	-78	36	3621	-25.73	-4.55	-0.35
57	SLE FR 5	-58	37	3578	-25.62	-3.64	-0.34
57	SLE FR 6	-64	38	3659	-26.1	-3.95	-0.35
57	SLE QP 1	-58	35	3434	-24.61	-3.6	-0.33
57	SLE QP 2	-62	37	3569	-25.5	-3.81	-0.34
57	SLD 1	1076	38	3595	-26.96	49.18	-0.49
57	SLD 2	1076	38	3595	-26.96	49.18	-0.49
57	SLD 3	1198	30	3174	-21.7	54.75	-0.31
57	SLD 4	1198	30	3174	-21.7	54.75	-0.31
57	SLD 5	95	48	4215	-33.91	3.64	-0.66
57	SLD 6	95	48	4215	-33.91	3.64	-0.66
57	SLD 7	501	24	2812	-16.39	22.2	-0.05
57	SLD 8	501	24	2812	-16.39	22.2	-0.05
57	SLD 9	-625	50	4326	-34.62	-29.83	-0.63
57	SLD 10	-625	50	4326	-34.62	-29.83	-0.63
57	SLD 11	-218	25	2923	-17.09	-11.26	-0.02
57	SLD 12	-218	25	2923	-17.09	-11.26	-0.02
57	SLD 13	-1321	43	3965	-29.31	-62.38	-0.37
57	SLD 14	-1321	43	3965	-29.31	-62.38	-0.37
57	SLD 15	-1199	36	3544	-24.05	-56.81	-0.19
57	SLD 16	-1199	36	3544	-24.05	-56.81	-0.19
57	SLV 1	2520	39	3642	-28.75	116.43	-0.71
57	SLV 2	2520	39	3642	-28.75	116.43	-0.71
57	SLV 3	2817	21	2627	-16.37	130.03	-0.26
57	SLV 4	2817	21	2627	-16.37	130.03	-0.26
57	SLV 5	262	65	5130	-45.25	11.63	-1.12
57	SLV 6	262	65	5130	-45.25	11.63	-1.12
57	SLV 7	1253	5	1748	-3.99	56.97	0.35
57	SLV 8	1253	5	1748	-3.99	56.97	0.35
57	SLV 9	-1376	69	5391	-47.01	-64.6	-1.03
57	SLV 10	-1376	69	5391	-47.01	-64.6	-1.03
57	SLV 11	-385	9	2008	-5.76	-19.26	0.44
57	SLV 12	-385	9	2008	-5.76	-19.26	0.44
57	SLV 13	-2940	52	4511	-34.64	-137.66	-0.42
57	SLV 14	-2940	52	4511	-34.64	-137.66	-0.42
57	SLV 15	-2643	34	3496	-22.26	-124.06	0.03
57	SLV 16	-2643	34	3496	-22.26	-124.06	0.03
58	SLU 1	-40	23	3555	-17.67	-3.98	-0.47
58	SLU 2	-182	18	3899	-17.69	-9.96	-0.53
58	SLU 3	-30	24	3615	-18.17	-3.57	-0.49
58	SLU 4	-115	21	3821	-18.18	-7.16	-0.52
58	SLU 5	-167	18	3936	-18.01	-9.32	-0.54
58	SLU 6	-16	24	3653	-18.49	-2.92	-0.49
58	SLU 7	-101	21	3859	-18.5	-6.51	-0.53
58	SLU 8	-11	24	3631	-18.31	-2.69	-0.49
58	SLU 9	-96	21	3837	-18.32	-6.28	-0.52
58	SLU 10	-188	21	4412	-20.06	-10.59	-0.59
58	SLU 11	-36	27	4128	-20.54	-4.2	-0.54
58	SLU 12	-121	24	4334	-20.55	-7.79	-0.58
58	SLU 13	-173	22	4450	-20.38	-9.95	-0.6
58	SLU 14	-21	27	4166	-20.86	-3.55	-0.55
58	SLU 15	-106	24	4372	-20.87	-7.14	-0.59
58	SLU 16	-17	27	4144	-20.68	-3.31	-0.55
58	SLU 17	-102	24	4350	-20.69	-6.91	-0.58
58	SLU 18	-48	28	4288	-21.05	-4.88	-0.56
58	SLU 19	-133	25	4494	-21.06	-8.47	-0.59
58	SLU 20	-34	28	4326	-21.37	-4.23	-0.57
58	SLU 21	-119	25	4532	-21.38	-7.82	-0.6
58	SLU 22	-50	26	3986	-19.92	-4.74	-0.53
58	SLU 23	-192	21	4330	-19.94	-10.72	-0.59
58	SLU 24	-40	27	4046	-20.42	-4.32	-0.54
58	SLU 25	-125	24	4252	-20.43	-7.91	-0.58

Nodo	Cont.	Reazione a traslazione			Reazione a rotazione		
Ind.	N.br.	x	y	z	x	y	z
58	SLU 26	-177	21	4368	-20.26	-10.07	-0.59
58	SLU 27	-26	27	4084	-20.74	-3.68	-0.55
58	SLU 28	-110	24	4290	-20.75	-7.27	-0.59
58	SLU 29	-21	27	4062	-20.56	-3.44	-0.55
58	SLU 30	-106	24	4268	-20.57	-7.03	-0.58
58	SLU 31	-197	24	4843	-22.31	-11.35	-0.65
58	SLU 32	-46	30	4559	-22.79	-4.95	-0.6
58	SLU 33	-131	27	4766	-22.8	-8.54	-0.64
58	SLU 34	-183	25	4881	-22.63	-10.7	-0.65
58	SLU 35	-31	30	4597	-23.11	-4.31	-0.61
58	SLU 36	-116	27	4803	-23.12	-7.9	-0.65
58	SLU 37	-27	30	4575	-22.93	-4.07	-0.61
58	SLU 38	-111	27	4781	-22.94	-7.66	-0.64
58	SLU 39	-58	31	4720	-23.3	-5.63	-0.61
58	SLU 40	-143	28	4926	-23.31	-9.22	-0.65
58	SLU 41	-44	31	4757	-23.62	-4.99	-0.62
58	SLU 42	-129	28	4964	-23.63	-8.58	-0.66
58	SLU 43	-49	29	4474	-22.2	-4.91	-0.59
58	SLU 44	-191	24	4817	-22.22	-10.9	-0.65
58	SLU 45	-39	30	4533	-22.7	-4.5	-0.61
58	SLU 46	-124	27	4740	-22.71	-8.09	-0.64
58	SLU 47	-176	24	4855	-22.54	-10.25	-0.66
58	SLU 48	-24	30	4571	-23.02	-3.85	-0.62
58	SLU 49	-109	27	4777	-23.03	-7.45	-0.65
58	SLU 50	-20	30	4549	-22.84	-3.62	-0.61
58	SLU 51	-105	27	4755	-22.85	-7.21	-0.65
58	SLU 52	-196	27	5330	-24.58	-11.53	-0.71
58	SLU 53	-45	33	5047	-25.06	-5.13	-0.67
58	SLU 54	-130	30	5253	-25.08	-8.72	-0.7
58	SLU 55	-182	28	5368	-24.91	-10.88	-0.72
58	SLU 56	-30	33	5084	-25.39	-4.48	-0.68
58	SLU 57	-115	30	5291	-25.4	-8.07	-0.71
58	SLU 58	-25	33	5062	-25.21	-4.25	-0.67
58	SLU 59	-110	30	5269	-25.22	-7.84	-0.71
58	SLU 60	-57	33	5207	-25.58	-5.81	-0.68
58	SLU 61	-142	30	5413	-25.59	-9.4	-0.71
58	SLU 62	-42	34	5245	-25.9	-5.16	-0.69
58	SLU 63	-127	31	5451	-25.91	-8.76	-0.72
58	SLU 64	-59	32	4905	-24.45	-5.67	-0.65
58	SLU 65	-200	27	5249	-24.47	-11.65	-0.71
58	SLU 66	-49	33	4965	-24.95	-5.26	-0.66
58	SLU 67	-134	30	5171	-24.96	-8.85	-0.7
58	SLU 68	-186	27	5286	-24.79	-11.01	-0.72
58	SLU 69	-34	33	5003	-25.27	-4.61	-0.67
58	SLU 70	-119	30	5209	-25.28	-8.2	-0.71
58	SLU 71	-30	33	4981	-25.09	-4.38	-0.67
58	SLU 72	-114	30	5187	-25.1	-7.97	-0.7
58	SLU 73	-206	30	5762	-26.83	-12.28	-0.77
58	SLU 74	-55	36	5478	-27.31	-5.89	-0.72
58	SLU 75	-140	33	5684	-27.33	-9.48	-0.76
58	SLU 76	-191	31	5800	-27.16	-11.64	-0.78
58	SLU 77	-40	36	5516	-27.64	-5.24	-0.73
58	SLU 78	-125	33	5722	-27.65	-8.83	-0.77
58	SLU 79	-35	36	5494	-27.46	-5.01	-0.73
58	SLU 80	-120	33	5700	-27.47	-8.6	-0.76
58	SLU 81	-67	36	5638	-27.83	-6.57	-0.74
58	SLU 82	-152	33	5844	-27.84	-10.16	-0.77
58	SLU 83	-52	37	5676	-28.15	-5.92	-0.74
58	SLU 84	-137	34	5882	-28.16	-9.51	-0.78
58	SLE RA 1	-43	24	3678	-18.31	-4.19	-0.49
58	SLE RA 2	-138	21	3907	-18.32	-8.18	-0.53
58	SLE RA 3	-37	24	3718	-18.64	-3.92	-0.5
58	SLE RA 4	-93	22	3856	-18.65	-6.31	-0.52
58	SLE RA 5	-128	21	3933	-18.54	-7.75	-0.53
58	SLE RA 6	-27	25	3743	-18.86	-3.49	-0.5
58	SLE RA 7	-83	23	3881	-18.87	-5.88	-0.53
58	SLE RA 8	-24	24	3729	-18.74	-3.33	-0.5
58	SLE RA 9	-80	22	3866	-18.75	-5.73	-0.52
58	SLE RA 10	-141	23	4249	-19.9	-8.6	-0.57
58	SLE RA 11	-40	26	4060	-20.22	-4.34	-0.54
58	SLE RA 12	-97	24	4198	-20.23	-6.73	-0.56
58	SLE RA 13	-132	23	4275	-20.12	-8.17	-0.57
58	SLE RA 14	-31	27	4085	-20.44	-3.91	-0.54
58	SLE RA 15	-87	25	4223	-20.45	-6.3	-0.57
58	SLE RA 16	-27	27	4071	-20.32	-3.75	-0.54
58	SLE RA 17	-84	25	4208	-20.33	-6.15	-0.56
58	SLE RA 18	-49	27	4167	-20.56	-4.79	-0.54
58	SLE RA 19	-105	25	4304	-20.57	-7.19	-0.57
58	SLE RA 20	-39	27	4192	-20.78	-4.36	-0.55
58	SLE RA 21	-95	25	4330	-20.79	-6.76	-0.57
58	SLE FR 1	-43	24	3678	-18.31	-4.19	-0.49
58	SLE FR 2	-62	23	3724	-18.31	-4.99	-0.5
58	SLE FR 3	-39	24	3688	-18.4	-4.02	-0.49
58	SLE FR 4	-64	24	3871	-18.99	-5.17	-0.51
58	SLE FR 5	-41	25	3835	-19.07	-4.2	-0.51
58	SLE FR 6	-46	25	3923	-19.44	-4.49	-0.52
58	SLE QP 1	-43	24	3678	-18.31	-4.19	-0.49
58	SLE QP 2	-45	25	3825	-18.99	-4.37	-0.5
58	SLD 1	1099	25	3783	-19.3	48.98	-0.63
58	SLD 2	1099	25	3783	-19.3	48.98	-0.63
58	SLD 3	1246	19	3345	-16.18	55.4	-0.47

Nodo	Cont.	Reazione a traslazione			Reazione a rotazione		
Ind.	N.br.	x	y	z	x	y	z
58	SLD 4	1246	19	3345	-16.18	55.4	-0.47
58	SLD 5	74	34	4477	-23.81	1.89	-0.79
58	SLD 6	74	34	4477	-23.81	1.89	-0.79
58	SLD 7	567	14	3016	-13.42	23.3	-0.24
58	SLD 8	567	14	3016	-13.42	23.3	-0.24
58	SLD 9	-656	36	4633	-24.55	-32.05	-0.77
58	SLD 10	-656	36	4633	-24.55	-32.05	-0.77
58	SLD 11	-164	15	3173	-14.16	-10.64	-0.22
58	SLD 12	-164	15	3173	-14.16	-10.64	-0.22
58	SLD 13	-1336	31	4305	-21.79	-64.15	-0.54
58	SLD 14	-1336	31	4305	-21.79	-64.15	-0.54
58	SLD 15	-1188	25	3867	-18.67	-57.73	-0.38
58	SLD 16	-1188	25	3867	-18.67	-57.73	-0.38
58	SLV 1	2548	25	3748	-19.66	116.61	-0.81
58	SLV 2	2548	25	3748	-19.66	116.61	-0.81
58	SLV 3	2908	10	2697	-12.4	132.31	-0.42
58	SLV 4	2908	10	2697	-12.4	132.31	-0.42
58	SLV 5	186	48	5397	-30.19	8.11	-1.19
58	SLV 6	186	48	5397	-30.19	8.11	-1.19
58	SLV 7	1388	-3	1891	-6.01	60.44	0.11
58	SLV 8	1388	-3	1891	-6.01	60.44	0.11
58	SLV 9	-1478	52	5758	-31.96	-69.19	-1.12
58	SLV 10	-1478	52	5758	-31.96	-69.19	-1.12
58	SLV 11	-275	2	2253	-7.78	-16.86	0.18
58	SLV 12	-275	2	2253	-7.78	-16.86	0.18
58	SLV 13	-2998	40	4953	-25.57	-141.06	-0.59
58	SLV 14	-2998	40	4953	-25.57	-141.06	-0.59
58	SLV 15	-2637	25	3901	-18.31	-125.36	-0.2
58	SLV 16	-2637	25	3901	-18.31	-125.36	-0.2
59	SLU 1	75	8	3929	-9.86	-2.99	-0.9
59	SLU 2	-76	5	4214	-9.31	-9.67	-0.89
59	SLU 3	87	8	3996	-10.14	-2.54	-0.93
59	SLU 4	-3	6	4167	-9.81	-6.55	-0.92
59	SLU 5	-60	5	4256	-9.49	-8.99	-0.9
59	SLU 6	103	8	4039	-10.32	-1.85	-0.95
59	SLU 7	13	6	4210	-9.99	-5.87	-0.94
59	SLU 8	107	8	4014	-10.22	-1.61	-0.94
59	SLU 9	16	6	4185	-9.89	-5.62	-0.93
59	SLU 10	-58	6	4792	-10.67	-9.93	-1
59	SLU 11	105	9	4575	-11.5	-2.8	-1.04
59	SLU 12	15	7	4746	-11.17	-6.81	-1.04
59	SLU 13	-42	6	4835	-10.85	-9.24	-1.02
59	SLU 14	121	9	4617	-11.68	-2.11	-1.06
59	SLU 15	30	7	4788	-11.35	-6.12	-1.05
59	SLU 16	125	9	4592	-11.58	-1.87	-1.05
59	SLU 17	34	7	4763	-11.25	-5.88	-1.04
59	SLU 18	101	10	4755	-11.8	-3.35	-1.07
59	SLU 19	10	8	4926	-11.47	-7.36	-1.06
59	SLU 20	117	10	4797	-11.98	-2.66	-1.08
59	SLU 21	26	8	4968	-11.65	-6.68	-1.07
59	SLU 22	85	9	4415	-11.16	-3.47	-1.01
59	SLU 23	-66	6	4700	-10.61	-10.16	-1
59	SLU 24	97	9	4483	-11.44	-3.03	-1.04
59	SLU 25	6	7	4654	-11.11	-7.04	-1.03
59	SLU 26	-50	6	4743	-10.79	-9.47	-1.02
59	SLU 27	113	9	4525	-11.62	-2.34	-1.06
59	SLU 28	22	7	4696	-11.29	-6.35	-1.05
59	SLU 29	117	9	4500	-11.52	-2.1	-1.05
59	SLU 30	26	7	4671	-11.19	-6.11	-1.04
59	SLU 31	-48	7	5278	-11.97	-10.42	-1.11
59	SLU 32	115	10	5061	-12.79	-3.28	-1.15
59	SLU 33	24	9	5232	-12.46	-7.29	-1.15
59	SLU 34	-32	7	5321	-12.15	-9.73	-1.13
59	SLU 35	131	11	5103	-12.97	-2.6	-1.17
59	SLU 36	40	9	5274	-12.64	-6.61	-1.16
59	SLU 37	135	11	5078	-12.87	-2.35	-1.16
59	SLU 38	44	9	5249	-12.54	-6.37	-1.15
59	SLU 39	111	11	5241	-13.1	-3.84	-1.18
59	SLU 40	20	9	5412	-12.77	-7.85	-1.17
59	SLU 41	126	11	5284	-13.28	-3.15	-1.19
59	SLU 42	36	9	5455	-12.95	-7.16	-1.19
59	SLU 43	95	10	4941	-12.38	-3.72	-1.13
59	SLU 44	-56	6	5226	-11.83	-10.4	-1.12
59	SLU 45	107	10	5008	-12.66	-3.27	-1.16
59	SLU 46	16	8	5179	-12.33	-7.28	-1.15
59	SLU 47	-41	7	5268	-12.01	-9.72	-1.14
59	SLU 48	122	10	5051	-12.83	-2.58	-1.18
59	SLU 49	32	8	5222	-12.51	-6.6	-1.17
59	SLU 50	126	10	5026	-12.74	-2.34	-1.17
59	SLU 51	36	8	5197	-12.41	-6.35	-1.16
59	SLU 52	-38	8	5804	-13.18	-10.66	-1.23
59	SLU 53	125	11	5587	-14.01	-3.53	-1.28
59	SLU 54	34	9	5758	-13.68	-7.54	-1.27
59	SLU 55	-23	8	5847	-13.36	-9.97	-1.25
59	SLU 56	140	11	5629	-14.19	-2.84	-1.29
59	SLU 57	50	9	5800	-13.86	-6.85	-1.29
59	SLU 58	144	11	5604	-14.09	-2.6	-1.28
59	SLU 59	54	9	5775	-13.76	-6.61	-1.28
59	SLU 60	120	12	5767	-14.32	-4.08	-1.3
59	SLU 61	30	10	5938	-13.99	-8.09	-1.29
59	SLU 62	136	12	5809	-14.5	-3.39	-1.32

Nodo	Cont.	Reazione a traslazione			Reazione a rotazione		
Ind.	N.br.	x	y	z	x	y	z
59	SLU 63	45	10	5980	-14.17	-7.41	-1.31
59	SLU 64	104	11	5427	-13.67	-4.2	-1.24
59	SLU 65	-47	8	5712	-13.12	-10.89	-1.23
59	SLU 66	116	11	5495	-13.95	-3.76	-1.27
59	SLU 67	26	9	5666	-13.62	-7.77	-1.26
59	SLU 68	-31	8	5755	-13.3	-10.2	-1.25
59	SLU 69	132	11	5537	-14.13	-3.07	-1.29
59	SLU 70	42	9	5708	-13.8	-7.08	-1.28
59	SLU 71	136	11	5512	-14.03	-2.83	-1.28
59	SLU 72	45	9	5683	-13.7	-6.84	-1.27
59	SLU 73	-29	9	6290	-14.48	-11.15	-1.35
59	SLU 74	134	12	6073	-15.31	-4.01	-1.39
59	SLU 75	44	10	6244	-14.98	-8.02	-1.38
59	SLU 76	-13	9	6333	-14.66	-10.46	-1.36
59	SLU 77	150	13	6115	-15.49	-3.33	-1.4
59	SLU 78	59	11	6286	-15.16	-7.34	-1.4
59	SLU 79	154	12	6090	-15.39	-3.08	-1.39
59	SLU 80	63	10	6261	-15.06	-7.1	-1.39
59	SLU 81	130	13	6253	-15.61	-4.57	-1.41
59	SLU 82	39	11	6424	-15.28	-8.58	-1.4
59	SLU 83	146	13	6296	-15.79	-3.88	-1.43
59	SLU 84	55	11	6467	-15.46	-7.89	-1.42
59	SLE RA 1	78	8	4068	-10.23	-3.13	-0.93
59	SLE RA 2	-22	6	4258	-9.87	-7.58	-0.92
59	SLE RA 3	86	8	4113	-10.42	-2.83	-0.95
59	SLE RA 4	26	7	4227	-10.2	-5.5	-0.95
59	SLE RA 5	-12	6	4286	-9.98	-7.13	-0.94
59	SLE RA 6	97	8	4141	-10.54	-2.37	-0.96
59	SLE RA 7	36	7	4255	-10.32	-5.05	-0.96
59	SLE RA 8	99	8	4124	-10.47	-2.21	-0.96
59	SLE RA 9	39	7	4238	-10.25	-4.88	-0.95
59	SLE RA 10	-10	7	4643	-10.77	-7.75	-1
59	SLE RA 11	98	9	4498	-11.32	-3	-1.03
59	SLE RA 12	38	8	4612	-11.1	-5.67	-1.02
59	SLE RA 13	0	7	4672	-10.89	-7.3	-1.01
59	SLE RA 14	109	9	4527	-11.44	-2.54	-1.04
59	SLE RA 15	48	8	4641	-11.22	-5.22	-1.03
59	SLE RA 16	111	9	4510	-11.38	-2.38	-1.03
59	SLE RA 17	51	8	4624	-11.16	-5.05	-1.03
59	SLE RA 18	95	9	4619	-11.52	-3.37	-1.04
59	SLE RA 19	35	8	4733	-11.31	-6.04	-1.04
59	SLE RA 20	106	9	4647	-11.64	-2.91	-1.05
59	SLE RA 21	45	8	4761	-11.42	-5.59	-1.05
59	SLE FR 1	78	8	4068	-10.23	-3.13	-0.93
59	SLE FR 2	58	8	4106	-10.16	-4.02	-0.93
59	SLE FR 3	82	8	4079	-10.28	-2.94	-0.94
59	SLE FR 4	63	8	4271	-10.55	-4.09	-0.96
59	SLE FR 5	87	9	4244	-10.67	-3.02	-0.97
59	SLE FR 6	87	9	4343	-10.88	-3.25	-0.99
59	SLE QP 1	78	8	4068	-10.23	-3.13	-0.93
59	SLE QP 2	83	9	4233	-10.62	-3.2	-0.97
59	SLD 1	1152	8	4059	-10.24	51.8	-1.11
59	SLD 2	1152	8	4059	-10.24	51.8	-1.11
59	SLD 3	1322	2	3620	-8.23	59.48	-0.89
59	SLD 4	1322	2	3620	-8.23	59.48	-0.89
59	SLD 5	145	17	4847	-13.56	1.65	-1.33
59	SLD 6	145	17	4847	-13.56	1.65	-1.33
59	SLD 7	714	-2	3383	-6.85	27.25	-0.62
59	SLD 8	714	-2	3383	-6.85	27.25	-0.62
59	SLD 9	-547	19	5083	-14.39	-33.65	-1.31
59	SLD 10	-547	19	5083	-14.39	-33.65	-1.31
59	SLD 11	21	0	3619	-7.68	-8.05	-0.6
59	SLD 12	21	0	3619	-7.68	-8.05	-0.6
59	SLD 13	-1156	15	4846	-13.01	-65.88	-1.04
59	SLD 14	-1156	15	4846	-13.01	-65.88	-1.04
59	SLD 15	-985	9	4407	-10.99	-58.2	-0.82
59	SLD 16	-985	9	4407	-10.99	-58.2	-0.82
59	SLV 1	2504	7	3859	-9.75	121.44	-1.31
59	SLV 2	2504	7	3859	-9.75	121.44	-1.31
59	SLV 3	2920	-7	2811	-5.03	140.19	-0.81
59	SLV 4	2920	-7	2811	-5.03	140.19	-0.81
59	SLV 5	180	29	5710	-17.53	5.76	-1.83
59	SLV 6	180	29	5710	-17.53	5.76	-1.83
59	SLV 7	1564	-17	2217	-1.78	68.24	-0.16
59	SLV 8	1564	-17	2217	-1.78	68.24	-0.16
59	SLV 9	-1398	34	6249	-19.46	-74.64	-1.78
59	SLV 10	-1398	34	6249	-19.46	-74.64	-1.78
59	SLV 11	-13	-12	2756	-3.71	-12.16	-0.1
59	SLV 12	-13	-12	2756	-3.71	-12.16	-0.1
59	SLV 13	-2753	24	5655	-16.21	-146.58	-1.13
59	SLV 14	-2753	24	5655	-16.21	-146.58	-1.13
59	SLV 15	-2338	10	4607	-11.49	-127.84	-0.62
59	SLV 16	-2338	10	4607	-11.49	-127.84	-0.62
60	SLU 1	146	-10	4526	-3.07	-9.9	-1.06
60	SLU 2	4	-12	4748	-2.51	-16.69	-1.03
60	SLU 3	158	-11	4605	-3.17	-9.62	-1.07
60	SLU 4	73	-12	4739	-2.84	-13.69	-1.06
60	SLU 5	19	-12	4797	-2.58	-16.14	-1.04
60	SLU 6	172	-11	4654	-3.23	-9.06	-1.08
60	SLU 7	87	-12	4788	-2.9	-13.14	-1.07
60	SLU 8	175	-11	4624	-3.2	-8.79	-1.08

Nodo	Cont.	Reazione a traslazione			Reazione a rotazione		
Ind.	N.br.	x	y	z	x	y	z
60	SLU 9	90	-12	4758	-2.86	-12.87	-1.06
60	SLU 10	38	-13	5429	-2.97	-17.88	-1.19
60	SLU 11	191	-12	5286	-3.62	-10.8	-1.23
60	SLU 12	106	-13	5420	-3.29	-14.88	-1.21
60	SLU 13	52	-13	5478	-3.03	-17.32	-1.2
60	SLU 14	206	-12	5335	-3.68	-10.25	-1.24
60	SLU 15	121	-13	5469	-3.35	-14.33	-1.22
60	SLU 16	208	-12	5305	-3.65	-9.98	-1.23
60	SLU 17	123	-13	5438	-3.31	-14.05	-1.22
60	SLU 18	194	-12	5499	-3.71	-11.59	-1.28
60	SLU 19	109	-13	5632	-3.38	-15.67	-1.26
60	SLU 20	208	-12	5548	-3.78	-11.04	-1.29
60	SLU 21	123	-13	5681	-3.44	-15.11	-1.27
60	SLU 22	169	-11	5100	-3.52	-11.17	-1.19
60	SLU 23	28	-13	5323	-2.96	-17.97	-1.16
60	SLU 24	181	-12	5179	-3.62	-10.89	-1.2
60	SLU 25	96	-13	5313	-3.28	-14.97	-1.19
60	SLU 26	42	-13	5372	-3.03	-17.41	-1.18
60	SLU 27	196	-12	5229	-3.68	-10.34	-1.22
60	SLU 28	111	-13	5362	-3.35	-14.42	-1.2
60	SLU 29	198	-12	5198	-3.64	-10.07	-1.21
60	SLU 30	113	-13	5332	-3.31	-14.14	-1.2
60	SLU 31	61	-14	6003	-3.41	-19.15	-1.32
60	SLU 32	215	-13	5860	-4.07	-12.08	-1.36
60	SLU 33	130	-14	5994	-3.73	-16.15	-1.35
60	SLU 34	76	-14	6052	-3.48	-18.6	-1.33
60	SLU 35	229	-13	5909	-4.13	-11.52	-1.37
60	SLU 36	144	-14	6043	-3.8	-15.6	-1.36
60	SLU 37	232	-13	5879	-4.09	-11.25	-1.36
60	SLU 38	147	-14	6013	-3.76	-15.33	-1.35
60	SLU 39	217	-13	6073	-4.16	-12.86	-1.41
60	SLU 40	132	-14	6206	-3.83	-16.94	-1.39
60	SLU 41	232	-13	6122	-4.23	-12.31	-1.42
60	SLU 42	147	-14	6255	-3.89	-16.39	-1.41
60	SLU 43	182	-13	5687	-3.84	-12.43	-1.33
60	SLU 44	40	-15	5909	-3.28	-19.22	-1.3
60	SLU 45	194	-13	5766	-3.94	-12.15	-1.34
60	SLU 46	109	-14	5900	-3.6	-16.22	-1.33
60	SLU 47	55	-15	5958	-3.34	-18.67	-1.31
60	SLU 48	208	-13	5815	-4	-11.59	-1.35
60	SLU 49	123	-14	5949	-3.66	-15.67	-1.34
60	SLU 50	211	-13	5785	-3.96	-11.32	-1.35
60	SLU 51	126	-14	5919	-3.63	-15.4	-1.33
60	SLU 52	74	-16	6590	-3.73	-20.41	-1.46
60	SLU 53	227	-14	6447	-4.39	-13.33	-1.5
60	SLU 54	142	-15	6580	-4.05	-17.41	-1.48
60	SLU 55	88	-16	6639	-3.8	-19.86	-1.47
60	SLU 56	241	-15	6496	-4.45	-12.78	-1.51
60	SLU 57	156	-16	6630	-4.12	-16.86	-1.5
60	SLU 58	244	-15	6466	-4.41	-12.51	-1.5
60	SLU 59	159	-16	6599	-4.08	-16.58	-1.49
60	SLU 60	230	-15	6659	-4.48	-14.12	-1.55
60	SLU 61	145	-16	6793	-4.15	-18.2	-1.53
60	SLU 62	244	-15	6709	-4.54	-13.57	-1.56
60	SLU 63	159	-16	6842	-4.21	-17.65	-1.54
60	SLU 64	205	-14	6261	-4.29	-13.7	-1.46
60	SLU 65	63	-16	6483	-3.73	-20.5	-1.44
60	SLU 66	217	-14	6340	-4.38	-13.42	-1.48
60	SLU 67	132	-15	6474	-4.05	-17.5	-1.46
60	SLU 68	78	-16	6533	-3.79	-19.95	-1.45
60	SLU 69	231	-14	6389	-4.45	-12.87	-1.49
60	SLU 70	146	-15	6523	-4.11	-16.95	-1.47
60	SLU 71	234	-14	6359	-4.41	-12.6	-1.48
60	SLU 72	149	-15	6493	-4.08	-16.67	-1.47
60	SLU 73	97	-17	7164	-4.18	-21.68	-1.59
60	SLU 74	250	-15	7021	-4.84	-14.61	-1.63
60	SLU 75	165	-16	7155	-4.5	-18.69	-1.62
60	SLU 76	111	-17	7213	-4.24	-21.13	-1.6
60	SLU 77	265	-16	7070	-4.9	-14.06	-1.64
60	SLU 78	180	-17	7204	-4.56	-18.13	-1.63
60	SLU 79	267	-16	7040	-4.86	-13.78	-1.64
60	SLU 80	182	-17	7174	-4.53	-17.86	-1.62
60	SLU 81	253	-16	7234	-4.93	-15.4	-1.68
60	SLU 82	168	-17	7367	-4.6	-19.47	-1.67
60	SLU 83	267	-16	7283	-4.99	-14.84	-1.69
60	SLU 84	182	-17	7416	-4.66	-18.92	-1.68
60	SLE RA 1	153	-11	4690	-3.2	-10.26	-1.09
60	SLE RA 2	58	-12	4838	-2.83	-14.79	-1.08
60	SLE RA 3	161	-11	4743	-3.26	-10.07	-1.1
60	SLE RA 4	104	-11	4832	-3.04	-12.79	-1.1
60	SLE RA 5	68	-12	4871	-2.87	-14.42	-1.09
60	SLE RA 6	170	-11	4776	-3.31	-9.7	-1.11
60	SLE RA 7	114	-12	4865	-3.08	-12.42	-1.1
60	SLE RA 8	172	-11	4755	-3.28	-9.52	-1.11
60	SLE RA 9	115	-11	4844	-3.06	-12.24	-1.1
60	SLE RA 10	80	-13	5292	-3.13	-15.58	-1.18
60	SLE RA 11	183	-12	5197	-3.56	-10.86	-1.21
60	SLE RA 12	126	-12	5286	-3.34	-13.58	-1.2
60	SLE RA 13	90	-13	5325	-3.17	-15.21	-1.19
60	SLE RA 14	192	-12	5230	-3.61	-10.5	-1.21
60	SLE RA 15	136	-12	5318	-3.38	-13.21	-1.21

Nodo	Cont.	Reazione a traslazione			Reazione a rotazione		
Ind.	N.br.	x	y	z	x	y	z
60	SLE RA 16	194	-12	5209	-3.58	-10.31	-1.21
60	SLE RA 17	138	-12	5298	-3.36	-13.03	-1.2
60	SLE RA 18	185	-12	5338	-3.63	-11.39	-1.24
60	SLE RA 19	128	-12	5427	-3.41	-14.11	-1.23
60	SLE RA 20	194	-12	5371	-3.67	-11.02	-1.25
60	SLE RA 21	137	-13	5460	-3.45	-13.74	-1.24
60	SLE FR 1	153	-11	4690	-3.2	-10.26	-1.09
60	SLE FR 2	134	-11	4720	-3.12	-11.17	-1.09
60	SLE FR 3	157	-11	4703	-3.22	-10.11	-1.1
60	SLE FR 4	143	-11	4914	-3.25	-11.5	-1.13
60	SLE FR 5	166	-11	4898	-3.34	-10.45	-1.14
60	SLE FR 6	169	-11	5014	-3.41	-10.82	-1.17
60	SLE QP 1	153	-11	4690	-3.2	-10.26	-1.09
60	SLE QP 2	162	-11	4885	-3.33	-10.6	-1.14
60	SLD 1	1020	-9	4441	-2.9	41.37	-1.04
60	SLD 2	1020	-9	4441	-2.9	41.37	-1.04
60	SLD 3	1207	-5	3981	-1.34	48.69	-0.86
60	SLD 4	1207	-5	3981	-1.34	48.69	-0.86
60	SLD 5	136	-17	5449	-5.57	-6.12	-1.37
60	SLD 6	136	-17	5449	-5.57	-6.12	-1.37
60	SLD 7	759	-2	3916	-0.36	18.3	-0.79
60	SLD 8	759	-2	3916	-0.36	18.3	-0.79
60	SLD 9	-434	-19	5853	-6.3	-39.5	-1.48
60	SLD 10	-434	-19	5853	-6.3	-39.5	-1.48
60	SLD 11	188	-5	4320	-1.09	-15.07	-0.9
60	SLD 12	188	-5	4320	-1.09	-15.07	-0.9
60	SLD 13	-882	-17	5788	-5.32	-69.89	-1.41
60	SLD 14	-882	-17	5788	-5.32	-69.89	-1.41
60	SLD 15	-695	-13	5328	-3.76	-62.56	-1.24
60	SLD 16	-695	-13	5328	-3.76	-62.56	-1.24
60	SLV 1	2102	-7	3899	-2.36	107.06	-0.91
60	SLV 2	2102	-7	3899	-2.36	107.06	-0.91
60	SLV 3	2555	3	2806	1.31	125.08	-0.49
60	SLV 4	2555	3	2806	1.31	125.08	-0.49
60	SLV 5	57	-26	6247	-8.62	-2.64	-1.71
60	SLV 6	57	-26	6247	-8.62	-2.64	-1.71
60	SLV 7	1567	9	2603	3.64	57.44	-0.31
60	SLV 8	1567	9	2603	3.64	57.44	-0.31
60	SLV 9	-1243	-31	7166	-10.3	-78.64	-1.97
60	SLV 10	-1243	-31	7166	-10.3	-78.64	-1.97
60	SLV 11	268	4	3522	1.96	-18.56	-0.57
60	SLV 12	268	4	3522	1.96	-18.56	-0.57
60	SLV 13	-2231	-25	6963	-7.97	-146.28	-1.78
60	SLV 14	-2231	-25	6963	-7.97	-146.28	-1.78
60	SLV 15	-1778	-15	5870	-4.29	-128.25	-1.36
60	SLV 16	-1778	-15	5870	-4.29	-128.25	-1.36
61	SLU 1	6	-594	8319	17.79	12.98	7.09
61	SLU 2	-114	-639	8588	19.55	7.71	7.58
61	SLU 3	12	-604	8464	18.09	13.55	7.21
61	SLU 4	-60	-631	8625	19.15	10.39	7.5
61	SLU 5	-107	-646	8675	19.77	8.38	7.66
61	SLU 6	19	-611	8551	18.31	14.22	7.29
61	SLU 7	-53	-638	8713	19.37	11.06	7.58
61	SLU 8	21	-609	8494	18.22	14.32	7.26
61	SLU 9	-51	-635	8655	19.29	11.15	7.55
61	SLU 10	-101	-722	9846	22	9.88	8.56
61	SLU 11	25	-687	9722	20.53	15.71	8.19
61	SLU 12	-47	-714	9884	21.59	12.55	8.49
61	SLU 13	-93	-729	9934	22.22	10.54	8.65
61	SLU 14	32	-694	9810	20.75	16.38	8.28
61	SLU 15	-40	-721	9971	21.81	13.22	8.57
61	SLU 16	34	-691	9752	20.67	16.48	8.24
61	SLU 17	-38	-718	9914	21.73	13.32	8.53
61	SLU 18	25	-713	10116	21.28	16.07	8.5
61	SLU 19	-47	-739	10278	22.34	12.91	8.79
61	SLU 20	32	-720	10204	21.5	16.74	8.58
61	SLU 21	-40	-746	10366	22.56	13.58	8.87
61	SLU 22	15	-664	9385	19.85	14.56	7.91
61	SLU 23	-105	-708	9655	21.62	9.3	8.4
61	SLU 24	21	-674	9531	20.15	15.13	8.03
61	SLU 25	-51	-700	9692	21.21	11.97	8.32
61	SLU 26	-98	-715	9742	21.83	9.96	8.48
61	SLU 27	28	-681	9618	20.37	15.8	8.11
61	SLU 28	-44	-707	9780	21.43	12.64	8.4
61	SLU 29	30	-678	9561	20.29	15.9	8.08
61	SLU 30	-42	-705	9722	21.35	12.74	8.37
61	SLU 31	-92	-791	10913	24.06	11.46	9.39
61	SLU 32	34	-756	10789	22.59	17.3	9.02
61	SLU 33	-38	-783	10951	23.65	14.14	9.31
61	SLU 34	-84	-798	11001	24.28	12.13	9.47
61	SLU 35	41	-763	10877	22.81	17.97	9.1
61	SLU 36	-31	-790	11038	23.87	14.8	9.39
61	SLU 37	43	-761	10819	22.73	18.06	9.06
61	SLU 38	-29	-787	10981	23.79	14.9	9.36
61	SLU 39	34	-782	11183	23.34	17.66	9.32
61	SLU 40	-38	-809	11345	24.4	14.49	9.61
61	SLU 41	41	-789	11271	23.56	18.32	9.4
61	SLU 42	-31	-816	11432	24.62	15.16	9.7
61	SLU 43	4	-749	10448	22.42	16.33	8.94
61	SLU 44	-115	-794	10718	24.18	11.06	9.43
61	SLU 45	10	-759	10594	22.72	16.9	9.05

Nodo	Cont.	Reazione a traslazione			Reazione a rotazione		
Ind.	N.br.	x	y	z	x	y	z
61	SLU 46	-62	-786	10755	23.78	13.74	9.35
61	SLU 47	-108	-801	10805	24.4	11.73	9.51
61	SLU 48	18	-766	10681	22.94	17.57	9.14
61	SLU 49	-54	-793	10843	24	14.41	9.43
61	SLU 50	19	-763	10624	22.85	17.67	9.1
61	SLU 51	-53	-790	10785	23.91	14.51	9.39
61	SLU 52	-102	-876	11976	26.63	13.23	10.41
61	SLU 53	24	-842	11852	25.16	19.07	10.04
61	SLU 54	-48	-868	12014	26.22	15.9	10.33
61	SLU 55	-95	-883	12064	26.85	13.89	10.49
61	SLU 56	31	-849	11940	25.38	19.73	10.12
61	SLU 57	-41	-875	12101	26.44	16.57	10.41
61	SLU 58	33	-846	11882	25.3	19.83	10.09
61	SLU 59	-39	-873	12044	26.36	16.67	10.38
61	SLU 60	24	-867	12246	25.91	19.42	10.35
61	SLU 61	-48	-894	12408	26.97	16.26	10.64
61	SLU 62	31	-874	12334	26.13	20.09	10.43
61	SLU 63	-41	-901	12495	27.19	16.93	10.72
61	SLU 64	13	-818	11515	24.48	17.92	9.76
61	SLU 65	-107	-863	11784	26.25	12.65	10.25
61	SLU 66	19	-828	11660	24.78	18.48	9.88
61	SLU 67	-53	-855	11822	25.84	15.32	10.17
61	SLU 68	-99	-870	11872	26.46	13.31	10.33
61	SLU 69	27	-835	11748	25	19.15	9.96
61	SLU 70	-45	-862	11910	26.06	15.99	10.25
61	SLU 71	28	-832	11690	24.92	19.25	9.92
61	SLU 72	-44	-859	11852	25.98	16.09	10.22
61	SLU 73	-93	-946	13043	28.69	14.81	11.23
61	SLU 74	33	-911	12919	27.22	20.65	10.86
61	SLU 75	-39	-938	13080	28.28	17.49	11.15
61	SLU 76	-86	-953	13130	28.91	15.48	11.31
61	SLU 77	40	-918	13006	27.44	21.32	10.94
61	SLU 78	-32	-945	13168	28.5	18.16	11.24
61	SLU 79	42	-915	12949	27.36	21.42	10.91
61	SLU 80	-30	-942	13110	28.42	18.25	11.2
61	SLU 81	33	-937	13313	27.97	21.01	11.17
61	SLU 82	-39	-963	13474	29.03	17.85	11.46
61	SLU 83	40	-944	13401	28.19	21.68	11.25
61	SLU 84	-32	-970	13562	29.25	18.51	11.54
61	SLE RA 1	8	-614	8623	18.38	13.43	7.33
61	SLE RA 2	-72	-644	8803	19.55	9.92	7.65
61	SLE RA 3	12	-621	8720	18.58	13.81	7.4
61	SLE RA 4	-36	-639	8828	19.29	11.7	7.6
61	SLE RA 5	-67	-649	8861	19.7	10.37	7.71
61	SLE RA 6	17	-626	8779	18.72	14.26	7.46
61	SLE RA 7	-31	-643	8886	19.43	12.15	7.65
61	SLE RA 8	18	-624	8740	18.67	14.32	7.44
61	SLE RA 9	-30	-641	8848	19.37	12.22	7.63
61	SLE RA 10	-63	-699	9642	21.18	11.36	8.31
61	SLE RA 11	21	-676	9559	20.21	15.26	8.06
61	SLE RA 12	-27	-694	9667	20.91	13.15	8.26
61	SLE RA 13	-58	-704	9700	21.33	11.81	8.36
61	SLE RA 14	26	-681	9618	20.35	15.7	8.12
61	SLE RA 15	-22	-699	9725	21.06	13.59	8.31
61	SLE RA 16	27	-679	9579	20.3	15.77	8.09
61	SLE RA 17	-21	-697	9687	21	13.66	8.29
61	SLE RA 18	21	-693	9822	20.7	15.49	8.27
61	SLE RA 19	-27	-711	9930	21.41	13.39	8.46
61	SLE RA 20	26	-698	9880	20.85	15.94	8.32
61	SLE RA 21	-22	-716	9988	21.56	13.83	8.52
61	SLE FR 1	8	-614	8623	18.38	13.43	7.33
61	SLE FR 2	-8	-620	8659	18.61	12.73	7.39
61	SLE FR 3	10	-616	8647	18.43	13.61	7.35
61	SLE FR 4	-4	-644	9019	19.31	13.35	7.67
61	SLE FR 5	14	-640	9006	19.13	14.23	7.63
61	SLE FR 6	15	-654	9223	19.54	14.46	7.8
61	SLE QP 1	8	-614	8623	18.38	13.43	7.33
61	SLE QP 2	12	-638	8983	19.07	14.05	7.61
61	SLD 1	474	-668	7544	12.34	52.49	7.89
61	SLD 2	474	-668	7544	12.34	52.49	7.89
61	SLD 3	590	-463	6673	20.69	58.48	5.66
61	SLD 4	590	-463	6673	20.69	58.48	5.66
61	SLD 5	-25	-959	9872	4.38	16.5	11.09
61	SLD 6	-25	-959	9872	4.38	16.5	11.09
61	SLD 7	362	-274	6969	32.23	36.46	3.63
61	SLD 8	362	-274	6969	32.23	36.46	3.63
61	SLD 9	-337	-1002	10997	5.92	-8.36	11.59
61	SLD 10	-337	-1002	10997	5.92	-8.36	11.59
61	SLD 11	50	-317	8093	33.77	11.61	4.13
61	SLD 12	50	-317	8093	33.77	11.61	4.13
61	SLD 13	-565	-813	11293	17.46	-30.37	9.56
61	SLD 14	-565	-813	11293	17.46	-30.37	9.56
61	SLD 15	-449	-608	10422	25.81	-24.38	7.32
61	SLD 16	-449	-608	10422	25.81	-24.38	7.32
61	SLV 1	1051	-714	5763	2.71	101.06	8.34
61	SLV 2	1051	-714	5763	2.71	101.06	8.34
61	SLV 3	1339	-218	3681	22.95	115.79	2.95
61	SLV 4	1339	-218	3681	22.95	115.79	2.95
61	SLV 5	-113	-1412	11174	-16.53	17.8	16
61	SLV 6	-113	-1412	11174	-16.53	17.8	16
61	SLV 7	847	240	4235	50.93	66.93	-1.96

Nodo	Cont.	Reazione a traslazione			Reazione a rotazione		
Ind.	N.br.	x	y	z	x	y	z
61	SLV 8	847	240	4235	50.93	66.93	-1.96
61	SLV 9	-823	-1516	13731	-12.78	-38.83	17.18
61	SLV 10	-823	-1516	13731	-12.78	-38.83	17.18
61	SLV 11	138	137	6791	54.68	10.3	-0.78
61	SLV 12	138	137	6791	54.68	10.3	-0.78
61	SLV 13	-1315	-1058	14285	15.2	-87.69	12.27
61	SLV 14	-1315	-1058	14285	15.2	-87.69	12.27
61	SLV 15	-1027	-562	12203	35.44	-72.95	6.88
61	SLV 16	-1027	-562	12203	35.44	-72.95	6.88
62	SLU 1	-1201	-12	3796	2.85	-16.24	0.45
62	SLU 2	-1294	-12	3945	2.76	-19.36	0.42
62	SLU 3	-1218	-13	3856	2.92	-16.38	0.46
62	SLU 4	-1274	-12	3945	2.87	-18.25	0.44
62	SLU 5	-1299	-12	3972	2.81	-19.31	0.43
62	SLU 6	-1224	-13	3882	2.97	-16.34	0.47
62	SLU 7	-1279	-13	3972	2.91	-18.2	0.45
62	SLU 8	-1212	-13	3849	2.94	-16.15	0.46
62	SLU 9	-1267	-12	3939	2.89	-18.02	0.45
62	SLU 10	-1478	-14	4537	3.21	-21.66	0.5
62	SLU 11	-1403	-15	4448	3.37	-18.69	0.54
62	SLU 12	-1458	-14	4537	3.31	-20.55	0.52
62	SLU 13	-1483	-14	4564	3.25	-21.61	0.51
62	SLU 14	-1408	-15	4475	3.41	-18.64	0.55
62	SLU 15	-1463	-14	4564	3.36	-20.51	0.53
62	SLU 16	-1396	-15	4441	3.39	-18.45	0.54
62	SLU 17	-1452	-14	4531	3.33	-20.32	0.52
62	SLU 18	-1465	-15	4642	3.49	-19.53	0.56
62	SLU 19	-1520	-15	4731	3.44	-21.4	0.55
62	SLU 20	-1470	-15	4668	3.53	-19.48	0.57
62	SLU 21	-1525	-15	4758	3.48	-21.35	0.55
62	SLU 22	-1362	-14	4306	3.26	-18.3	0.52
62	SLU 23	-1454	-13	4455	3.17	-21.41	0.5
62	SLU 24	-1379	-14	4366	3.33	-18.44	0.53
62	SLU 25	-1434	-14	4455	3.28	-20.31	0.52
62	SLU 26	-1459	-14	4482	3.22	-21.37	0.5
62	SLU 27	-1384	-15	4393	3.38	-18.39	0.54
62	SLU 28	-1439	-14	4482	3.32	-20.26	0.52
62	SLU 29	-1372	-15	4360	3.35	-18.21	0.54
62	SLU 30	-1428	-14	4449	3.3	-20.07	0.52
62	SLU 31	-1638	-15	5047	3.62	-23.71	0.58
62	SLU 32	-1563	-16	4958	3.78	-20.74	0.61
62	SLU 33	-1618	-16	5048	3.72	-22.61	0.6
62	SLU 34	-1643	-15	5074	3.66	-23.67	0.58
62	SLU 35	-1568	-17	4985	3.82	-20.7	0.62
62	SLU 36	-1623	-16	5074	3.77	-22.56	0.6
62	SLU 37	-1557	-16	4952	3.8	-20.51	0.61
62	SLU 38	-1612	-16	5041	3.74	-22.37	0.6
62	SLU 39	-1625	-17	5152	3.9	-21.59	0.64
62	SLU 40	-1680	-16	5241	3.85	-23.46	0.62
62	SLU 41	-1630	-17	5179	3.94	-21.54	0.64
62	SLU 42	-1686	-17	5268	3.89	-23.41	0.63
62	SLU 43	-1507	-16	4759	3.57	-20.41	0.56
62	SLU 44	-1599	-15	4908	3.48	-23.52	0.53
62	SLU 45	-1524	-16	4819	3.64	-20.55	0.57
62	SLU 46	-1579	-15	4909	3.58	-22.42	0.55
62	SLU 47	-1604	-15	4935	3.52	-23.48	0.54
62	SLU 48	-1529	-16	4846	3.68	-20.5	0.58
62	SLU 49	-1584	-16	4936	3.63	-22.37	0.56
62	SLU 50	-1518	-16	4813	3.66	-20.32	0.57
62	SLU 51	-1573	-16	4902	3.6	-22.18	0.56
62	SLU 52	-1783	-17	5501	3.92	-25.82	0.61
62	SLU 53	-1708	-18	5411	4.08	-22.85	0.65
62	SLU 54	-1763	-17	5501	4.03	-24.72	0.63
62	SLU 55	-1789	-17	5527	3.97	-25.78	0.62
62	SLU 56	-1713	-18	5438	4.13	-22.81	0.66
62	SLU 57	-1769	-18	5528	4.07	-24.67	0.64
62	SLU 58	-1702	-18	5405	4.1	-22.62	0.65
62	SLU 59	-1757	-17	5495	4.05	-24.48	0.63
62	SLU 60	-1770	-18	5605	4.2	-23.7	0.67
62	SLU 61	-1825	-18	5695	4.15	-25.57	0.66
62	SLU 62	-1775	-18	5632	4.25	-23.65	0.68
62	SLU 63	-1831	-18	5722	4.19	-25.52	0.66
62	SLU 64	-1667	-17	5270	3.98	-22.47	0.63
62	SLU 65	-1759	-17	5419	3.89	-25.58	0.61
62	SLU 66	-1684	-18	5330	4.05	-22.61	0.64
62	SLU 67	-1739	-17	5419	3.99	-24.48	0.63
62	SLU 68	-1765	-17	5446	3.93	-25.53	0.61
62	SLU 69	-1689	-18	5357	4.09	-22.56	0.65
62	SLU 70	-1745	-17	5446	4.04	-24.43	0.63
62	SLU 71	-1678	-18	5323	4.07	-22.37	0.65
62	SLU 72	-1733	-17	5413	4.01	-24.24	0.63
62	SLU 73	-1944	-18	6011	4.33	-27.88	0.69
62	SLU 74	-1868	-19	5922	4.49	-24.91	0.72
62	SLU 75	-1924	-19	6011	4.44	-26.78	0.71
62	SLU 76	-1949	-19	6038	4.38	-27.83	0.69
62	SLU 77	-1874	-20	5949	4.54	-24.86	0.73
62	SLU 78	-1929	-19	6038	4.48	-26.73	0.71
62	SLU 79	-1862	-20	5916	4.51	-24.67	0.72
62	SLU 80	-1917	-19	6005	4.46	-26.54	0.71
62	SLU 81	-1930	-20	6116	4.61	-25.76	0.75
62	SLU 82	-1986	-20	6205	4.56	-27.62	0.73

Nodo	Cont.	Reazione a traslazione			Reazione a rotazione		
Ind.	N.br.	x	y	z	x	y	z
62	SLU 83	-1936	-20	6142	4.66	-25.71	0.75
62	SLU 84	-1991	-20	6232	4.6	-27.58	0.74
62	SLE RA 1	-1247	-13	3941	2.97	-16.83	0.47
62	SLE RA 2	-1309	-12	4041	2.91	-18.91	0.45
62	SLE RA 3	-1258	-13	3981	3.02	-16.93	0.48
62	SLE RA 4	-1295	-13	4041	2.98	-18.17	0.47
62	SLE RA 5	-1312	-13	4059	2.94	-18.87	0.46
62	SLE RA 6	-1262	-13	3999	3.05	-16.89	0.48
62	SLE RA 7	-1299	-13	4059	3.01	-18.14	0.47
62	SLE RA 8	-1254	-13	3977	3.03	-16.77	0.48
62	SLE RA 9	-1291	-13	4037	2.99	-18.01	0.47
62	SLE RA 10	-1432	-14	4436	3.21	-20.44	0.51
62	SLE RA 11	-1381	-14	4376	3.31	-18.46	0.53
62	SLE RA 12	-1418	-14	4436	3.28	-19.7	0.52
62	SLE RA 13	-1435	-14	4453	3.24	-20.41	0.51
62	SLE RA 14	-1385	-15	4394	3.34	-18.43	0.53
62	SLE RA 15	-1422	-14	4454	3.31	-19.67	0.52
62	SLE RA 16	-1377	-14	4372	3.33	-18.3	0.53
62	SLE RA 17	-1414	-14	4432	3.29	-19.55	0.52
62	SLE RA 18	-1423	-15	4505	3.39	-19.02	0.55
62	SLE RA 19	-1460	-14	4565	3.36	-20.27	0.54
62	SLE RA 20	-1426	-15	4523	3.42	-18.99	0.55
62	SLE RA 21	-1463	-15	4583	3.39	-20.24	0.54
62	SLE FR 1	-1247	-13	3941	2.97	-16.83	0.47
62	SLE FR 2	-1260	-13	3961	2.96	-17.25	0.47
62	SLE FR 3	-1249	-13	3949	2.98	-16.82	0.47
62	SLE FR 4	-1312	-13	4130	3.09	-17.9	0.49
62	SLE FR 5	-1301	-14	4118	3.11	-17.48	0.5
62	SLE FR 6	-1335	-14	4223	3.18	-17.93	0.51
62	SLE QP 1	-1247	-13	3941	2.97	-16.83	0.47
62	SLE QP 2	-1300	-13	4111	3.1	-17.49	0.49
62	SLD 1	-428	-12	2121	2.79	2.62	0.43
62	SLD 2	-428	-12	2121	2.79	2.62	0.43
62	SLD 3	-278	-8	1749	1.91	6.3	0.16
62	SLD 4	-278	-8	1749	1.91	6.3	0.16
62	SLD 5	-1267	-19	4078	4.34	-17.04	0.89
62	SLD 6	-1267	-19	4078	4.34	-17.04	0.89
62	SLD 7	-765	-6	2838	1.4	-4.77	-0.02
62	SLD 8	-765	-6	2838	1.4	-4.77	-0.02
62	SLD 9	-1835	-21	5384	4.79	-30.21	1.01
62	SLD 10	-1835	-21	5384	4.79	-30.21	1.01
62	SLD 11	-1333	-8	4143	1.85	-17.94	0.1
62	SLD 12	-1333	-8	4143	1.85	-17.94	0.1
62	SLD 13	-2322	-19	6472	4.29	-41.28	0.83
62	SLD 14	-2322	-19	6472	4.29	-41.28	0.83
62	SLD 15	-2172	-15	6100	3.4	-37.6	0.56
62	SLD 16	-2172	-15	6100	3.4	-37.6	0.56
62	SLV 1	673	-10	-396	2.4	27.95	0.35
62	SLV 2	673	-10	-396	2.4	27.95	0.35
62	SLV 3	1037	0	-1286	0.28	36.99	-0.3
62	SLV 4	1037	0	-1286	0.28	36.99	-0.3
62	SLV 5	-1260	-27	4109	6.1	-17.56	1.43
62	SLV 6	-1260	-27	4109	6.1	-17.56	1.43
62	SLV 7	-47	5	1142	-0.96	12.56	-0.73
62	SLV 8	-47	5	1142	-0.96	12.56	-0.73
62	SLV 9	-2553	-32	7080	7.16	-47.54	1.72
62	SLV 10	-2553	-32	7080	7.16	-47.54	1.72
62	SLV 11	-1340	0	4112	0.09	-17.41	-0.44
62	SLV 12	-1340	0	4112	0.09	-17.41	-0.44
62	SLV 13	-3637	-26	9507	5.92	-71.97	1.29
62	SLV 14	-3637	-26	9507	5.92	-71.97	1.29
62	SLV 15	-3273	-17	8617	3.8	-62.93	0.64
62	SLV 16	-3273	-17	8617	3.8	-62.93	0.64
63	SLU 1	-99	12	2270	-3.21	-30.53	0.61
63	SLU 2	-52	11	2362	-2.96	-28.99	0.56
63	SLU 3	-90	13	2339	-3.34	-30.83	0.63
63	SLU 4	-62	12	2393	-3.19	-29.9	0.6
63	SLU 5	-38	11	2425	-3.07	-28.99	0.58
63	SLU 6	-77	13	2403	-3.45	-30.82	0.65
63	SLU 7	-49	12	2457	-3.3	-29.9	0.62
63	SLU 8	-72	13	2398	-3.42	-30.53	0.65
63	SLU 9	-44	12	2453	-3.27	-29.61	0.62
63	SLU 10	-91	12	2651	-3.26	-34.39	0.61
63	SLU 11	-129	14	2628	-3.64	-36.22	0.68
63	SLU 12	-101	13	2683	-3.49	-35.3	0.65
63	SLU 13	-78	12	2715	-3.36	-34.39	0.63
63	SLU 14	-116	14	2692	-3.75	-36.22	0.7
63	SLU 15	-88	13	2747	-3.6	-35.3	0.67
63	SLU 16	-112	14	2688	-3.72	-35.93	0.7
63	SLU 17	-83	13	2742	-3.57	-35	0.67
63	SLU 18	-155	14	2684	-3.64	-38.24	0.68
63	SLU 19	-127	13	2739	-3.49	-37.32	0.65
63	SLU 20	-142	14	2748	-3.74	-38.24	0.7
63	SLU 21	-114	13	2803	-3.59	-37.32	0.67
63	SLU 22	-187	13	2384	-3.44	-36.66	0.64
63	SLU 23	-141	12	2475	-3.18	-35.12	0.6
63	SLU 24	-179	13	2452	-3.57	-36.96	0.67
63	SLU 25	-151	13	2507	-3.41	-36.03	0.64
63	SLU 26	-127	12	2539	-3.29	-35.12	0.62
63	SLU 27	-166	14	2516	-3.67	-36.95	0.69
63	SLU 28	-137	13	2571	-3.52	-36.03	0.66

Nodo	Cont.	Reazione a traslazione			Reazione a rotazione		
Ind.	N.br.	x	y	z	x	y	z
63	SLU 29	-161	14	2512	-3.64	-36.66	0.68
63	SLU 30	-133	13	2566	-3.49	-35.74	0.65
63	SLU 31	-180	13	2764	-3.48	-40.52	0.65
63	SLU 32	-218	14	2742	-3.86	-42.35	0.72
63	SLU 33	-190	14	2796	-3.71	-41.43	0.69
63	SLU 34	-167	13	2828	-3.59	-40.52	0.67
63	SLU 35	-205	15	2806	-3.97	-42.35	0.74
63	SLU 36	-177	14	2860	-3.82	-41.43	0.71
63	SLU 37	-201	15	2801	-3.94	-42.06	0.73
63	SLU 38	-172	14	2856	-3.79	-41.13	0.71
63	SLU 39	-244	14	2797	-3.86	-44.37	0.72
63	SLU 40	-216	14	2852	-3.71	-43.45	0.69
63	SLU 41	-231	15	2861	-3.97	-44.37	0.74
63	SLU 42	-202	14	2916	-3.81	-43.45	0.71
63	SLU 43	-98	15	2913	-4.1	-37.59	0.78
63	SLU 44	-51	14	3004	-3.85	-36.05	0.73
63	SLU 45	-89	16	2981	-4.23	-37.88	0.8
63	SLU 46	-61	15	3036	-4.08	-36.96	0.77
63	SLU 47	-38	15	3068	-3.95	-36.05	0.75
63	SLU 48	-76	16	3045	-4.34	-37.88	0.82
63	SLU 49	-48	16	3100	-4.19	-36.96	0.79
63	SLU 50	-71	16	3041	-4.31	-37.59	0.81
63	SLU 51	-43	15	3095	-4.16	-36.66	0.79
63	SLU 52	-90	15	3293	-4.15	-41.45	0.78
63	SLU 53	-128	17	3271	-4.53	-43.28	0.85
63	SLU 54	-100	16	3325	-4.38	-42.36	0.82
63	SLU 55	-77	16	3357	-4.25	-41.45	0.8
63	SLU 56	-115	17	3334	-4.64	-43.28	0.87
63	SLU 57	-87	17	3389	-4.48	-42.35	0.84
63	SLU 58	-111	17	3330	-4.61	-42.98	0.87
63	SLU 59	-83	17	3385	-4.46	-42.06	0.84
63	SLU 60	-154	17	3326	-4.53	-45.3	0.85
63	SLU 61	-126	16	3381	-4.38	-44.38	0.82
63	SLU 62	-141	17	3390	-4.63	-45.3	0.87
63	SLU 63	-113	17	3445	-4.48	-44.37	0.84
63	SLU 64	-186	16	3026	-4.32	-43.72	0.81
63	SLU 65	-140	15	3117	-4.07	-42.18	0.77
63	SLU 66	-178	17	3094	-4.45	-44.01	0.84
63	SLU 67	-150	16	3149	-4.3	-43.09	0.81
63	SLU 68	-126	15	3181	-4.18	-42.18	0.79
63	SLU 69	-165	17	3158	-4.56	-44.01	0.86
63	SLU 70	-137	16	3213	-4.41	-43.09	0.83
63	SLU 71	-160	17	3154	-4.53	-43.72	0.85
63	SLU 72	-132	16	3209	-4.38	-42.79	0.82
63	SLU 73	-179	16	3407	-4.37	-47.58	0.82
63	SLU 74	-217	18	3384	-4.75	-49.41	0.89
63	SLU 75	-189	17	3439	-4.6	-48.49	0.86
63	SLU 76	-166	17	3471	-4.47	-47.58	0.84
63	SLU 77	-204	18	3448	-4.86	-49.41	0.91
63	SLU 78	-176	18	3503	-4.71	-48.48	0.88
63	SLU 79	-200	18	3443	-4.83	-49.11	0.9
63	SLU 80	-171	17	3498	-4.68	-48.19	0.88
63	SLU 81	-243	18	3440	-4.75	-51.43	0.89
63	SLU 82	-215	17	3494	-4.6	-50.51	0.86
63	SLU 83	-230	18	3503	-4.85	-51.43	0.91
63	SLU 84	-201	17	3558	-4.7	-50.5	0.88
63	SLE RA 1	-124	12	2303	-3.28	-32.28	0.62
63	SLE RA 2	-93	12	2363	-3.11	-31.26	0.59
63	SLE RA 3	-118	13	2348	-3.36	-32.48	0.63
63	SLE RA 4	-99	12	2385	-3.26	-31.86	0.61
63	SLE RA 5	-84	12	2406	-3.18	-31.26	0.6
63	SLE RA 6	-109	13	2391	-3.43	-32.48	0.65
63	SLE RA 7	-91	12	2427	-3.33	-31.86	0.63
63	SLE RA 8	-106	13	2388	-3.42	-32.28	0.64
63	SLE RA 9	-88	12	2424	-3.31	-31.67	0.62
63	SLE RA 10	-119	12	2557	-3.31	-34.86	0.62
63	SLE RA 11	-144	13	2541	-3.56	-36.08	0.67
63	SLE RA 12	-126	13	2578	-3.46	-35.46	0.65
63	SLE RA 13	-110	13	2599	-3.38	-34.85	0.63
63	SLE RA 14	-136	14	2584	-3.63	-36.08	0.68
63	SLE RA 15	-117	13	2620	-3.53	-35.46	0.66
63	SLE RA 16	-133	14	2581	-3.61	-35.88	0.68
63	SLE RA 17	-114	13	2617	-3.51	-35.26	0.66
63	SLE RA 18	-161	13	2578	-3.56	-37.42	0.67
63	SLE RA 19	-143	13	2615	-3.46	-36.81	0.65
63	SLE RA 20	-153	14	2621	-3.63	-37.42	0.68
63	SLE RA 21	-134	13	2658	-3.53	-36.81	0.66
63	SLE FR 1	-124	12	2303	-3.28	-32.28	0.62
63	SLE FR 2	-118	12	2315	-3.24	-32.08	0.61
63	SLE FR 3	-120	12	2320	-3.3	-32.28	0.62
63	SLE FR 4	-129	12	2398	-3.33	-33.62	0.63
63	SLE FR 5	-132	13	2402	-3.39	-33.83	0.64
63	SLE FR 6	-143	13	2441	-3.42	-34.85	0.64
63	SLE QP 1	-124	12	2303	-3.28	-32.28	0.62
63	SLE QP 2	-135	13	2385	-3.36	-33.83	0.63
63	SLD 1	1049	31	4806	-8.07	1.06	1.56
63	SLD 2	1049	31	4806	-8.07	1.06	1.56
63	SLD 3	908	20	4324	-4.94	3.96	0.94
63	SLD 4	908	20	4324	-4.94	3.96	0.94
63	SLD 5	433	35	3843	-9.52	-27.76	1.85
63	SLD 6	433	35	3843	-9.52	-27.76	1.85

Nodo	Cont.	Reazione a traslazione			Reazione a rotazione		
Ind.	N.br.	x	y	z	x	y	z
63	SLD 7	-35	-2	2236	0.91	-18.09	-0.22
63	SLD 8	-35	-2	2236	0.91	-18.09	-0.22
63	SLD 9	-235	27	2535	-7.64	-49.57	1.48
63	SLD 10	-235	27	2535	-7.64	-49.57	1.48
63	SLD 11	-703	-10	928	2.8	-39.89	-0.59
63	SLD 12	-703	-10	928	2.8	-39.89	-0.59
63	SLD 13	-1179	5	447	-1.79	-71.62	0.32
63	SLD 14	-1179	5	447	-1.79	-71.62	0.32
63	SLD 15	-1319	-6	-35	1.35	-68.71	-0.3
63	SLD 16	-1319	-6	-35	1.35	-68.71	-0.3
63	SLV 1	2569	57	7921	-14.54	45.42	2.84
63	SLV 2	2569	57	7921	-14.54	45.42	2.84
63	SLV 3	2233	30	6779	-7.19	52.46	1.38
63	SLV 4	2233	30	6779	-7.19	52.46	1.38
63	SLV 5	1185	66	5778	-17.86	-20.74	3.51
63	SLV 6	1185	66	5778	-17.86	-20.74	3.51
63	SLV 7	66	-22	1972	6.63	2.75	-1.36
63	SLV 8	66	-22	1972	6.63	2.75	-1.36
63	SLV 9	-337	47	2799	-13.36	-70.4	2.62
63	SLV 10	-337	47	2799	-13.36	-70.4	2.62
63	SLV 11	-1456	-41	-1007	11.13	-46.91	-2.24
63	SLV 12	-1456	-41	-1007	11.13	-46.91	-2.24
63	SLV 13	-2504	-5	-2008	0.46	-120.12	-0.12
63	SLV 14	-2504	-5	-2008	0.46	-120.12	-0.12
63	SLV 15	-2840	-32	-3150	7.81	-113.07	-1.58
63	SLV 16	-2840	-32	-3150	7.81	-113.07	-1.58
64	SLU 1	-1202	414	9880	-26.77	-50.46	-0.84
64	SLU 2	-1206	410	9833	-26.54	-48.83	-0.78
64	SLU 3	-1228	428	10083	-27.55	-51.17	-0.87
64	SLU 4	-1231	426	10054	-27.41	-50.19	-0.84
64	SLU 5	-1226	420	9973	-27.1	-49.12	-0.81
64	SLU 6	-1249	438	10222	-28.11	-51.45	-0.9
64	SLU 7	-1251	435	10194	-27.97	-50.48	-0.86
64	SLU 8	-1243	434	10159	-27.89	-51.03	-0.89
64	SLU 9	-1245	431	10131	-27.75	-50.06	-0.86
64	SLU 10	-1387	472	11298	-30.28	-57.28	-0.86
64	SLU 11	-1409	491	11547	-31.3	-59.61	-0.95
64	SLU 12	-1412	488	11519	-31.15	-58.63	-0.92
64	SLU 13	-1407	482	11437	-30.84	-57.56	-0.89
64	SLU 14	-1430	500	11687	-31.86	-59.9	-0.98
64	SLU 15	-1432	498	11659	-31.71	-58.92	-0.94
64	SLU 16	-1424	496	11624	-31.64	-59.48	-0.97
64	SLU 17	-1426	494	11596	-31.5	-58.5	-0.94
64	SLU 18	-1461	503	11972	-32.12	-62.53	-0.95
64	SLU 19	-1463	500	11944	-31.98	-61.55	-0.92
64	SLU 20	-1481	513	12112	-32.68	-62.81	-0.98
64	SLU 21	-1484	510	12084	-32.54	-61.83	-0.95
64	SLU 22	-1342	466	11056	-29.83	-59.05	-0.9
64	SLU 23	-1346	461	11009	-29.59	-57.43	-0.84
64	SLU 24	-1368	480	11259	-30.61	-59.76	-0.93
64	SLU 25	-1370	477	11231	-30.46	-58.78	-0.9
64	SLU 26	-1366	471	11149	-30.15	-57.71	-0.87
64	SLU 27	-1389	490	11398	-31.17	-60.05	-0.96
64	SLU 28	-1391	487	11370	-31.02	-59.07	-0.92
64	SLU 29	-1383	486	11335	-30.95	-59.63	-0.95
64	SLU 30	-1385	483	11307	-30.81	-58.65	-0.92
64	SLU 31	-1527	523	12474	-33.34	-65.87	-0.93
64	SLU 32	-1549	542	12723	-34.35	-68.2	-1.01
64	SLU 33	-1551	539	12695	-34.21	-67.23	-0.98
64	SLU 34	-1547	533	12613	-33.9	-66.16	-0.95
64	SLU 35	-1570	552	12863	-34.91	-68.49	-1.04
64	SLU 36	-1572	549	12835	-34.77	-67.51	-1.01
64	SLU 37	-1564	548	12800	-34.69	-68.07	-1.03
64	SLU 38	-1566	545	12772	-34.55	-67.09	-1
64	SLU 39	-1601	555	13148	-35.18	-71.12	-1.02
64	SLU 40	-1603	552	13120	-35.03	-70.14	-0.98
64	SLU 41	-1621	565	13288	-35.74	-71.41	-1.04
64	SLU 42	-1623	562	13260	-35.59	-70.43	-1.01
64	SLU 43	-1515	521	12441	-33.76	-62.65	-1.07
64	SLU 44	-1519	516	12394	-33.52	-61.02	-1.01
64	SLU 45	-1541	535	12643	-34.54	-63.36	-1.1
64	SLU 46	-1543	532	12615	-34.39	-62.38	-1.07
64	SLU 47	-1539	526	12533	-34.08	-61.31	-1.04
64	SLU 48	-1561	545	12783	-35.1	-63.64	-1.13
64	SLU 49	-1564	542	12755	-34.95	-62.67	-1.09
64	SLU 50	-1556	541	12720	-34.88	-63.23	-1.12
64	SLU 51	-1558	538	12692	-34.74	-62.25	-1.09
64	SLU 52	-1700	579	13858	-37.27	-69.47	-1.09
64	SLU 53	-1722	597	14108	-38.28	-71.8	-1.18
64	SLU 54	-1724	594	14080	-38.14	-70.83	-1.15
64	SLU 55	-1720	588	13998	-37.83	-69.76	-1.12
64	SLU 56	-1743	607	14247	-38.84	-72.09	-1.21
64	SLU 57	-1745	604	14219	-38.7	-71.11	-1.17
64	SLU 58	-1737	603	14185	-38.62	-71.67	-1.2
64	SLU 59	-1739	600	14156	-38.48	-70.69	-1.17
64	SLU 60	-1774	610	14533	-39.11	-74.72	-1.18
64	SLU 61	-1776	607	14505	-38.97	-73.74	-1.15
64	SLU 62	-1794	620	14673	-39.67	-75	-1.21
64	SLU 63	-1796	617	14644	-39.52	-74.03	-1.18
64	SLU 64	-1655	573	13617	-36.81	-71.25	-1.13
64	SLU 65	-1659	568	13570	-36.58	-69.62	-1.07

Nodo	Cont.	Reazione a traslazione			Reazione a rotazione		
Ind.	N.br.	x	y	z	x	y	z
64	SLU 66	-1681	586	13819	-37.59	-71.95	-1.16
64	SLU 67	-1683	584	13791	-37.45	-70.97	-1.13
64	SLU 68	-1679	578	13710	-37.14	-69.9	-1.1
64	SLU 69	-1701	596	13959	-38.15	-72.24	-1.19
64	SLU 70	-1703	594	13931	-38.01	-71.26	-1.15
64	SLU 71	-1696	592	13896	-37.93	-71.82	-1.18
64	SLU 72	-1698	589	13868	-37.79	-70.84	-1.15
64	SLU 73	-1840	630	15035	-40.32	-78.06	-1.16
64	SLU 74	-1862	649	15284	-41.34	-80.4	-1.24
64	SLU 75	-1864	646	15256	-41.19	-79.42	-1.21
64	SLU 76	-1860	640	15174	-40.88	-78.35	-1.18
64	SLU 77	-1882	659	15424	-41.9	-80.68	-1.27
64	SLU 78	-1885	656	15395	-41.75	-79.71	-1.24
64	SLU 79	-1877	655	15361	-41.68	-80.26	-1.26
64	SLU 80	-1879	652	15333	-41.54	-79.29	-1.23
64	SLU 81	-1914	661	15709	-42.16	-83.31	-1.25
64	SLU 82	-1916	658	15681	-42.02	-82.33	-1.21
64	SLU 83	-1934	671	15849	-42.72	-83.6	-1.27
64	SLU 84	-1936	668	15821	-42.58	-82.62	-1.24
64	SLE RA 1	-1242	429	10216	-27.65	-52.92	-0.86
64	SLE RA 2	-1245	426	10185	-27.49	-51.83	-0.82
64	SLE RA 3	-1260	438	10351	-28.17	-53.39	-0.88
64	SLE RA 4	-1261	437	10332	-28.07	-52.73	-0.85
64	SLE RA 5	-1258	433	10278	-27.86	-52.02	-0.84
64	SLE RA 6	-1273	445	10444	-28.54	-53.58	-0.89
64	SLE RA 7	-1275	443	10425	-28.44	-52.93	-0.87
64	SLE RA 8	-1269	442	10402	-28.39	-53.3	-0.89
64	SLE RA 9	-1271	440	10383	-28.3	-52.65	-0.87
64	SLE RA 10	-1366	467	11161	-29.98	-57.46	-0.87
64	SLE RA 11	-1380	480	11327	-30.66	-59.02	-0.93
64	SLE RA 12	-1382	478	11309	-30.57	-58.36	-0.91
64	SLE RA 13	-1379	474	11254	-30.36	-57.65	-0.89
64	SLE RA 14	-1394	486	11421	-31.03	-59.21	-0.95
64	SLE RA 15	-1395	485	11402	-30.94	-58.56	-0.93
64	SLE RA 16	-1390	484	11379	-30.89	-58.93	-0.94
64	SLE RA 17	-1392	482	11360	-30.79	-58.28	-0.92
64	SLE RA 18	-1415	488	11611	-31.21	-60.96	-0.93
64	SLE RA 19	-1416	486	11592	-31.12	-60.31	-0.91
64	SLE RA 20	-1428	495	11704	-31.59	-61.15	-0.95
64	SLE RA 21	-1430	493	11685	-31.49	-60.5	-0.93
64	SLE FR 1	-1242	429	10216	-27.65	-52.92	-0.86
64	SLE FR 2	-1243	428	10210	-27.62	-52.7	-0.85
64	SLE FR 3	-1248	432	10253	-27.8	-52.99	-0.86
64	SLE FR 4	-1295	446	10628	-28.69	-55.11	-0.87
64	SLE FR 5	-1300	450	10672	-28.87	-55.41	-0.89
64	SLE FR 6	-1329	459	10914	-29.43	-56.94	-0.89
64	SLE QP 1	-1242	429	10216	-27.65	-52.92	-0.86
64	SLE QP 2	-1294	447	10635	-28.72	-55.33	-0.88
64	SLD 1	-1522	514	9199	-31.65	-17.34	-1.93
64	SLD 2	-1522	514	9199	-31.65	-17.34	-1.93
64	SLD 3	-1406	65	8279	-8.5	-14.41	-1.15
64	SLD 4	-1406	65	8279	-8.5	-14.41	-1.15
64	SLD 5	-1539	1149	11599	-64.7	-48.38	-2.37
64	SLD 6	-1539	1149	11599	-64.7	-48.38	-2.37
64	SLD 7	-1151	-350	8532	12.45	-38.61	0.22
64	SLD 8	-1151	-350	8532	12.45	-38.61	0.22
64	SLD 9	-1437	1243	12737	-69.89	-72.05	-1.97
64	SLD 10	-1437	1243	12737	-69.89	-72.05	-1.97
64	SLD 11	-1049	-255	9670	7.27	-62.28	0.61
64	SLD 12	-1049	-255	9670	7.27	-62.28	0.61
64	SLD 13	-1183	829	12991	-48.93	-96.25	-0.6
64	SLD 14	-1183	829	12991	-48.93	-96.25	-0.6
64	SLD 15	-1066	379	12070	-25.79	-93.32	0.17
64	SLD 16	-1066	379	12070	-25.79	-93.32	0.17
64	SLV 1	-1818	610	7395	-35.85	30.99	-3.37
64	SLV 2	-1818	610	7395	-35.85	30.99	-3.37
64	SLV 3	-1544	-439	5245	18.14	38.05	-1.55
64	SLV 4	-1544	-439	5245	18.14	38.05	-1.55
64	SLV 5	-1866	2086	12924	-112.73	-40.14	-4.39
64	SLV 6	-1866	2086	12924	-112.73	-40.14	-4.39
64	SLV 7	-954	-1409	5756	67.21	-16.61	1.68
64	SLV 8	-954	-1409	5756	67.21	-16.61	1.68
64	SLV 9	-1634	2303	15513	-124.65	-94.05	-3.44
64	SLV 10	-1634	2303	15513	-124.65	-94.05	-3.44
64	SLV 11	-722	-1192	8345	55.29	-70.52	2.63
64	SLV 12	-722	-1192	8345	55.29	-70.52	2.63
64	SLV 13	-1044	1332	16024	-75.57	-148.71	-0.21
64	SLV 14	-1044	1332	16024	-75.57	-148.71	-0.21
64	SLV 15	-770	284	13874	-21.59	-141.65	1.61
64	SLV 16	-770	284	13874	-21.59	-141.65	1.61
65	SLU 1	802	251	7789	-40.93	38.55	8.32
65	SLU 2	786	258	7698	-41.09	36.73	8.09
65	SLU 3	819	261	7958	-42.02	39.38	8.5
65	SLU 4	810	265	7903	-42.12	38.29	8.36
65	SLU 5	799	265	7821	-41.86	37.31	8.22
65	SLU 6	832	268	8080	-42.79	39.97	8.63
65	SLU 7	822	272	8026	-42.89	38.87	8.49
65	SLU 8	827	264	8033	-42.47	39.71	8.57
65	SLU 9	818	269	7979	-42.57	38.62	8.44
65	SLU 10	906	296	8781	-46.6	43.18	9.37
65	SLU 11	939	299	9041	-47.53	45.83	9.78

Nodo	Cont.	Reazione a traslazione			Reazione a rotazione		
Ind.	N.br.	x	y	z	x	y	z
65	SLU 12	929	303	8986	-47.63	44.74	9.64
65	SLU 13	918	303	8904	-47.38	43.76	9.5
65	SLU 14	951	306	9163	-48.31	46.42	9.91
65	SLU 15	942	310	9109	-48.4	45.33	9.77
65	SLU 16	946	302	9117	-47.99	46.17	9.85
65	SLU 17	937	307	9062	-48.08	45.07	9.72
65	SLU 18	973	305	9336	-48.8	47.76	10.15
65	SLU 19	963	309	9282	-48.9	46.67	10.01
65	SLU 20	985	312	9458	-49.58	48.35	10.27
65	SLU 21	976	316	9404	-49.67	47.25	10.14
65	SLU 22	899	283	8669	-45.42	43.87	9.37
65	SLU 23	884	290	8579	-45.58	42.05	9.14
65	SLU 24	917	293	8839	-46.51	44.71	9.55
65	SLU 25	907	298	8784	-46.61	43.62	9.41
65	SLU 26	896	297	8701	-46.35	42.64	9.27
65	SLU 27	929	300	8961	-47.28	45.29	9.68
65	SLU 28	920	304	8907	-47.38	44.2	9.54
65	SLU 29	924	296	8914	-46.96	45.04	9.63
65	SLU 30	915	301	8860	-47.06	43.95	9.49
65	SLU 31	1003	328	9662	-51.09	48.51	10.42
65	SLU 32	1036	331	9922	-52.02	51.16	10.83
65	SLU 33	1027	336	9867	-52.12	50.07	10.69
65	SLU 34	1016	335	9785	-51.86	49.09	10.55
65	SLU 35	1049	338	10044	-52.79	51.75	10.96
65	SLU 36	1039	342	9990	-52.89	50.65	10.82
65	SLU 37	1044	335	9997	-52.47	51.49	10.91
65	SLU 38	1034	339	9943	-52.57	50.4	10.77
65	SLU 39	1070	337	10217	-53.29	53.09	11.2
65	SLU 40	1061	342	10163	-53.39	52	11.06
65	SLU 41	1083	344	10339	-54.06	53.68	11.33
65	SLU 42	1073	348	10285	-54.16	52.58	11.19
65	SLU 43	1009	315	9823	-51.67	48.28	10.45
65	SLU 44	994	322	9733	-51.83	46.46	10.23
65	SLU 45	1027	325	9992	-52.76	49.12	10.63
65	SLU 46	1017	330	9938	-52.86	48.03	10.5
65	SLU 47	1006	329	9855	-52.6	47.05	10.35
65	SLU 48	1039	332	10115	-53.53	49.7	10.76
65	SLU 49	1030	336	10060	-53.63	48.61	10.62
65	SLU 50	1034	328	10068	-53.21	49.45	10.71
65	SLU 51	1025	333	10014	-53.31	48.36	10.57
65	SLU 52	1113	360	10816	-57.34	52.91	11.51
65	SLU 53	1146	363	11075	-58.27	55.57	11.91
65	SLU 54	1137	368	11021	-58.37	54.48	11.78
65	SLU 55	1126	367	10938	-58.12	53.5	11.63
65	SLU 56	1159	370	11198	-59.05	56.15	12.04
65	SLU 57	1149	374	11143	-59.14	55.06	11.91
65	SLU 58	1154	366	11151	-58.73	55.9	11.99
65	SLU 59	1144	371	11097	-58.82	54.81	11.85
65	SLU 60	1180	369	11370	-59.54	57.5	12.28
65	SLU 61	1171	374	11316	-59.64	56.41	12.14
65	SLU 62	1193	376	11493	-60.32	58.08	12.41
65	SLU 63	1183	380	11439	-60.41	56.99	12.27
65	SLU 64	1107	347	10704	-56.16	53.61	11.5
65	SLU 65	1091	354	10614	-56.32	51.79	11.28
65	SLU 66	1124	357	10873	-57.25	54.45	11.68
65	SLU 67	1115	362	10819	-57.35	53.35	11.55
65	SLU 68	1103	361	10736	-57.09	52.37	11.4
65	SLU 69	1136	364	10995	-58.02	55.03	11.81
65	SLU 70	1127	369	10941	-58.12	53.94	11.68
65	SLU 71	1132	361	10949	-57.7	54.78	11.76
65	SLU 72	1122	365	10895	-57.8	53.69	11.62
65	SLU 73	1211	393	11697	-61.83	58.24	12.56
65	SLU 74	1243	395	11956	-62.76	60.9	12.96
65	SLU 75	1234	400	11902	-62.86	59.81	12.83
65	SLU 76	1223	399	11819	-62.6	58.83	12.68
65	SLU 77	1256	402	12079	-63.53	61.48	13.09
65	SLU 78	1246	407	12024	-63.63	60.39	12.96
65	SLU 79	1251	399	12032	-63.21	61.23	13.04
65	SLU 80	1242	403	11978	-63.31	60.14	12.9
65	SLU 81	1277	401	12251	-64.03	62.83	13.33
65	SLU 82	1268	406	12197	-64.13	61.74	13.2
65	SLU 83	1290	408	12374	-64.8	63.41	13.46
65	SLU 84	1280	413	12319	-64.9	62.32	13.32
65	SLE RA 1	830	260	8040	-42.21	40.07	8.62
65	SLE RA 2	819	265	7980	-42.32	38.85	8.47
65	SLE RA 3	841	267	8153	-42.94	40.62	8.74
65	SLE RA 4	835	270	8117	-43	39.9	8.65
65	SLE RA 5	828	269	8062	-42.83	39.24	8.55
65	SLE RA 6	850	271	8235	-43.46	41.01	8.82
65	SLE RA 7	843	274	8198	-43.52	40.29	8.73
65	SLE RA 8	847	269	8203	-43.24	40.85	8.79
65	SLE RA 9	840	272	8167	-43.31	40.12	8.7
65	SLE RA 10	899	290	8702	-45.99	43.16	9.32
65	SLE RA 11	921	292	8875	-46.61	44.93	9.59
65	SLE RA 12	915	295	8839	-46.68	44.2	9.5
65	SLE RA 13	907	295	8784	-46.51	43.55	9.41
65	SLE RA 14	929	297	8957	-47.13	45.32	9.68
65	SLE RA 15	923	300	8920	-47.19	44.59	9.59
65	SLE RA 16	926	294	8926	-46.92	45.15	9.64
65	SLE RA 17	920	297	8889	-46.98	44.42	9.55
65	SLE RA 18	944	296	9072	-47.46	46.21	9.84

Nodo	Cont.	Reazione a traslazione			Reazione a rotazione		
Ind.	N.br.	x	y	z	x	y	z
65	SLE RA 19	937	299	9036	-47.53	45.48	9.75
65	SLE RA 20	952	301	9153	-47.98	46.6	9.92
65	SLE RA 21	946	304	9117	-48.04	45.87	9.83
65	SLE FR 1	830	260	8040	-42.21	40.07	8.62
65	SLE FR 2	828	261	8028	-42.23	39.82	8.59
65	SLE FR 3	833	262	8073	-42.42	40.22	8.65
65	SLE FR 4	862	272	8338	-43.81	41.67	8.95
65	SLE FR 5	867	273	8382	-43.99	42.07	9.02
65	SLE FR 6	887	278	8556	-44.84	43.14	9.23
65	SLE QP 1	830	260	8040	-42.21	40.07	8.62
65	SLE QP 2	864	271	8350	-43.79	41.91	8.98
65	SLD 1	1005	682	9708	-66.1	54.99	10.96
65	SLD 2	1005	682	9708	-66.1	54.99	10.96
65	SLD 3	937	201	8972	-40.74	51.87	10.15
65	SLD 4	937	201	8972	-40.74	51.87	10.15
65	SLD 5	1010	1124	9875	-88.94	50.57	10.82
65	SLD 6	1010	1124	9875	-88.94	50.57	10.82
65	SLD 7	782	-480	7419	-4.41	40.17	8.09
65	SLD 8	782	-480	7419	-4.41	40.17	8.09
65	SLD 9	946	1022	9280	-83.16	43.66	9.87
65	SLD 10	946	1022	9280	-83.16	43.66	9.87
65	SLD 11	718	-583	6825	1.37	33.26	7.15
65	SLD 12	718	-583	6825	1.37	33.26	7.15
65	SLD 13	792	341	7728	-46.84	31.95	7.82
65	SLD 14	792	341	7728	-46.84	31.95	7.82
65	SLD 15	723	-141	6991	-21.48	28.83	7
65	SLD 16	723	-141	6991	-21.48	28.83	7
65	SLV 1	1187	1226	11459	-95.53	71.78	13.51
65	SLV 2	1187	1226	11459	-95.53	71.78	13.51
65	SLV 3	1026	103	9736	-36.37	64.37	11.59
65	SLV 4	1026	103	9736	-36.37	64.37	11.59
65	SLV 5	1205	2259	11895	-149.03	62.11	13.25
65	SLV 6	1205	2259	11895	-149.03	62.11	13.25
65	SLV 7	668	-1481	6153	48.16	37.41	6.86
65	SLV 8	668	-1481	6153	48.16	37.41	6.86
65	SLV 9	1060	2023	10546	-135.73	46.41	11.11
65	SLV 10	1060	2023	10546	-135.73	46.41	11.11
65	SLV 11	523	-1718	4804	61.46	21.71	4.72
65	SLV 12	523	-1718	4804	61.46	21.71	4.72
65	SLV 13	702	438	6963	-51.21	19.45	6.37
65	SLV 14	702	438	6963	-51.21	19.45	6.37
65	SLV 15	541	-684	5240	7.95	12.04	4.46
65	SLV 16	541	-684	5240	7.95	12.04	4.46
66	SLU 1	599	-164	3787	4.64	54.31	-2.53
66	SLU 2	602	-169	3792	5.44	50.77	-2.48
66	SLU 3	612	-168	3868	4.73	55.47	-2.58
66	SLU 4	613	-171	3871	5.21	53.35	-2.55
66	SLU 5	611	-172	3852	5.51	51.56	-2.52
66	SLU 6	621	-170	3927	4.8	56.27	-2.61
66	SLU 7	623	-173	3930	5.28	54.14	-2.58
66	SLU 8	618	-169	3905	4.78	55.91	-2.59
66	SLU 9	619	-172	3909	5.26	53.78	-2.57
66	SLU 10	683	-187	4304	5.78	60.73	-3.02
66	SLU 11	692	-185	4379	5.07	65.43	-3.12
66	SLU 12	694	-188	4382	5.55	63.31	-3.09
66	SLU 13	692	-189	4363	5.85	61.52	-3.06
66	SLU 14	702	-188	4438	5.14	66.23	-3.15
66	SLU 15	704	-191	4442	5.62	64.11	-3.12
66	SLU 16	699	-187	4416	5.12	65.87	-3.13
66	SLU 17	700	-190	4420	5.6	63.74	-3.11
66	SLU 18	715	-189	4517	5.13	68.54	-3.3
66	SLU 19	716	-192	4520	5.61	66.41	-3.27
66	SLU 20	724	-192	4576	5.2	69.34	-3.33
66	SLU 21	726	-195	4580	5.68	67.21	-3.31
66	SLU 22	663	-178	4201	4.89	62.69	-2.97
66	SLU 23	666	-183	4206	5.69	59.14	-2.93
66	SLU 24	676	-182	4282	4.98	63.85	-3.02
66	SLU 25	677	-184	4285	5.46	61.73	-3
66	SLU 26	675	-186	4266	5.77	59.94	-2.97
66	SLU 27	685	-184	4341	5.05	64.65	-3.06
66	SLU 28	687	-187	4344	5.53	62.52	-3.03
66	SLU 29	682	-183	4319	5.04	64.28	-3.04
66	SLU 30	684	-186	4323	5.52	62.16	-3.02
66	SLU 31	747	-201	4718	6.03	69.11	-3.47
66	SLU 32	757	-199	4793	5.32	73.81	-3.56
66	SLU 33	758	-202	4796	5.8	71.69	-3.54
66	SLU 34	756	-203	4777	6.11	69.9	-3.51
66	SLU 35	766	-202	4852	5.39	74.61	-3.6
66	SLU 36	768	-205	4856	5.87	72.48	-3.57
66	SLU 37	763	-201	4830	5.38	74.25	-3.58
66	SLU 38	765	-204	4834	5.86	72.12	-3.56
66	SLU 39	779	-203	4931	5.38	76.92	-3.75
66	SLU 40	780	-206	4934	5.86	74.79	-3.72
66	SLU 41	788	-206	4990	5.45	77.72	-3.78
66	SLU 42	790	-209	4994	5.93	75.59	-3.75
66	SLU 43	757	-209	4781	5.95	67.73	-3.13
66	SLU 44	759	-213	4786	6.75	64.19	-3.09
66	SLU 45	769	-212	4862	6.03	68.89	-3.18
66	SLU 46	771	-215	4865	6.51	66.77	-3.15
66	SLU 47	769	-216	4846	6.82	64.98	-3.12
66	SLU 48	779	-215	4921	6.11	69.69	-3.21

Nodo	Cont.	Reazione a traslazione			Reazione a rotazione		
Ind.	N.br.	x	y	z	x	y	z
66	SLU 49	780	-218	4924	6.58	67.56	-3.19
66	SLU 50	775	-214	4899	6.09	69.33	-3.2
66	SLU 51	777	-217	4903	6.57	67.2	-3.17
66	SLU 52	840	-231	5298	7.09	74.15	-3.63
66	SLU 53	850	-230	5373	6.37	78.86	-3.72
66	SLU 54	852	-233	5376	6.85	76.73	-3.69
66	SLU 55	850	-234	5357	7.16	74.95	-3.66
66	SLU 56	860	-232	5432	6.45	79.65	-3.75
66	SLU 57	861	-235	5436	6.92	77.53	-3.73
66	SLU 58	856	-232	5410	6.43	79.29	-3.74
66	SLU 59	858	-234	5414	6.91	77.16	-3.71
66	SLU 60	872	-234	5511	6.43	81.96	-3.9
66	SLU 61	874	-237	5514	6.91	79.84	-3.88
66	SLU 62	882	-236	5570	6.5	82.76	-3.94
66	SLU 63	883	-239	5574	6.98	80.63	-3.91
66	SLU 64	821	-222	5195	6.2	76.11	-3.58
66	SLU 65	823	-227	5200	7	72.57	-3.54
66	SLU 66	833	-226	5276	6.29	77.27	-3.63
66	SLU 67	835	-229	5279	6.77	75.15	-3.6
66	SLU 68	833	-230	5260	7.07	73.36	-3.57
66	SLU 69	843	-229	5335	6.36	78.07	-3.66
66	SLU 70	844	-232	5338	6.84	75.94	-3.64
66	SLU 71	840	-228	5313	6.34	77.71	-3.65
66	SLU 72	841	-231	5317	6.82	75.58	-3.62
66	SLU 73	904	-245	5712	7.34	82.53	-4.08
66	SLU 74	914	-244	5787	6.63	87.23	-4.17
66	SLU 75	916	-247	5790	7.11	85.11	-4.14
66	SLU 76	914	-248	5771	7.41	83.32	-4.11
66	SLU 77	924	-246	5846	6.7	88.03	-4.2
66	SLU 78	925	-249	5850	7.18	85.9	-4.18
66	SLU 79	920	-245	5824	6.68	87.67	-4.19
66	SLU 80	922	-248	5828	7.16	85.54	-4.16
66	SLU 81	936	-248	5925	6.69	90.34	-4.35
66	SLU 82	938	-251	5928	7.17	88.21	-4.32
66	SLU 83	946	-250	5984	6.76	91.14	-4.38
66	SLU 84	947	-253	5988	7.24	89.01	-4.36
66	SLE RA 1	617	-168	3905	4.71	56.7	-2.65
66	SLE RA 2	619	-171	3909	5.25	54.34	-2.63
66	SLE RA 3	626	-170	3959	4.77	57.48	-2.69
66	SLE RA 4	627	-172	3961	5.09	56.06	-2.67
66	SLE RA 5	625	-173	3948	5.29	54.87	-2.65
66	SLE RA 6	632	-172	3998	4.82	58.01	-2.71
66	SLE RA 7	633	-174	4001	5.14	56.59	-2.69
66	SLE RA 8	630	-172	3984	4.81	57.77	-2.7
66	SLE RA 9	631	-174	3986	5.13	56.35	-2.68
66	SLE RA 10	673	-183	4250	5.47	60.98	-2.99
66	SLE RA 11	680	-182	4300	5	64.12	-3.05
66	SLE RA 12	681	-184	4302	5.32	62.7	-3.03
66	SLE RA 13	679	-185	4289	5.52	61.51	-3.01
66	SLE RA 14	686	-184	4339	5.05	64.65	-3.07
66	SLE RA 15	687	-186	4342	5.37	63.23	-3.05
66	SLE RA 16	684	-183	4325	5.04	64.41	-3.06
66	SLE RA 17	685	-185	4327	5.36	62.99	-3.04
66	SLE RA 18	694	-185	4392	5.04	66.19	-3.17
66	SLE RA 19	695	-187	4394	5.36	64.77	-3.15
66	SLE RA 20	701	-187	4431	5.09	66.72	-3.19
66	SLE RA 21	702	-189	4434	5.41	65.31	-3.17
66	SLE FR 1	617	-168	3905	4.71	56.7	-2.65
66	SLE FR 2	618	-169	3906	4.82	56.23	-2.65
66	SLE FR 3	620	-169	3921	4.73	56.92	-2.66
66	SLE FR 4	641	-174	4052	4.92	59.08	-2.8
66	SLE FR 5	643	-174	4067	4.83	59.76	-2.82
66	SLE FR 6	656	-176	4148	4.88	61.45	-2.91
66	SLE QP 1	617	-168	3905	4.71	56.7	-2.65
66	SLE QP 2	640	-173	4051	4.81	59.55	-2.81
66	SLD 1	561	-163	4535	0.38	83.11	-3.85
66	SLD 2	561	-163	4535	0.38	83.11	-3.85
66	SLD 3	492	-147	4193	2.46	78.7	-3.27
66	SLD 4	492	-147	4193	2.46	78.7	-3.27
66	SLD 5	721	-195	4715	0.32	73.3	-3.99
66	SLD 6	721	-195	4715	0.32	73.3	-3.99
66	SLD 7	491	-140	3575	7.27	58.61	-2.07
66	SLD 8	491	-140	3575	7.27	58.61	-2.07
66	SLD 9	789	-206	4527	2.35	60.49	-3.54
66	SLD 10	789	-206	4527	2.35	60.49	-3.54
66	SLD 11	559	-151	3387	9.3	45.8	-1.62
66	SLD 12	559	-151	3387	9.3	45.8	-1.62
66	SLD 13	789	-199	3909	7.16	40.4	-2.35
66	SLD 14	789	-199	3909	7.16	40.4	-2.35
66	SLD 15	720	-183	3567	9.24	35.99	-1.77
66	SLD 16	720	-183	3567	9.24	35.99	-1.77
66	SLV 1	463	-151	5172	-5.61	113.28	-5.26
66	SLV 2	463	-151	5172	-5.61	113.28	-5.26
66	SLV 3	296	-112	4372	-0.52	102.85	-3.85
66	SLV 4	296	-112	4372	-0.52	102.85	-3.85
66	SLV 5	840	-225	5600	-6.04	91.48	-5.69
66	SLV 6	840	-225	5600	-6.04	91.48	-5.69
66	SLV 7	284	-97	2934	10.94	56.72	-0.98
66	SLV 8	284	-97	2934	10.94	56.72	-0.98
66	SLV 9	997	-250	5167	-1.31	62.38	-4.64
66	SLV 10	997	-250	5167	-1.31	62.38	-4.64

Nodo	Cont.	Reazione a traslazione			Reazione a rotazione		
Ind.	N.br.	x	y	z	x	y	z
66	SLV 11	440	-122	2501	15.66	27.62	0.07
66	SLV 12	440	-122	2501	15.66	27.62	0.07
66	SLV 13	984	-234	3729	10.14	16.26	-1.77
66	SLV 14	984	-234	3729	10.14	16.26	-1.77
66	SLV 15	817	-196	2929	15.24	5.83	-0.36
66	SLV 16	817	-196	2929	15.24	5.83	-0.36
67	SLU 1	24	90	272	-7.82	7.66	0.88
67	SLU 2	-44	87	409	-7.37	6.76	0.97
67	SLU 3	24	92	278	-8	7.81	0.89
67	SLU 4	-17	90	361	-7.73	7.28	0.95
67	SLU 5	-46	88	417	-7.5	6.86	0.98
67	SLU 6	23	94	286	-8.14	7.91	0.9
67	SLU 7	-18	92	368	-7.87	7.37	0.96
67	SLU 8	21	93	287	-8.09	7.85	0.9
67	SLU 9	-20	91	370	-7.82	7.31	0.95
67	SLU 10	31	98	303	-8.19	8.74	1.2
67	SLU 11	99	104	172	-8.83	9.79	1.12
67	SLU 12	58	102	254	-8.56	9.26	1.18
67	SLU 13	29	100	311	-8.33	8.84	1.21
67	SLU 14	98	105	180	-8.96	9.89	1.13
67	SLU 15	56	103	262	-8.69	9.35	1.19
67	SLU 16	96	105	181	-8.92	9.83	1.13
67	SLU 17	55	103	264	-8.64	9.29	1.18
67	SLU 18	131	107	120	-9	10.49	1.21
67	SLU 19	90	104	202	-8.73	9.95	1.26
67	SLU 20	130	108	128	-9.13	10.58	1.22
67	SLU 21	88	106	210	-8.86	10.05	1.27
67	SLU 22	93	99	169	-8.46	9.37	1.07
67	SLU 23	25	96	306	-8	8.47	1.16
67	SLU 24	93	101	176	-8.64	9.53	1.09
67	SLU 25	52	99	258	-8.37	8.99	1.14
67	SLU 26	23	97	314	-8.14	8.57	1.17
67	SLU 27	92	103	184	-8.77	9.62	1.1
67	SLU 28	51	101	266	-8.5	9.08	1.15
67	SLU 29	90	102	185	-8.73	9.56	1.09
67	SLU 30	49	100	267	-8.46	9.02	1.15
67	SLU 31	99	107	200	-8.83	10.45	1.39
67	SLU 32	168	113	70	-9.46	11.51	1.32
67	SLU 33	127	111	152	-9.19	10.97	1.37
67	SLU 34	98	109	208	-8.96	10.55	1.4
67	SLU 35	166	114	77	-9.6	11.6	1.33
67	SLU 36	125	112	160	-9.33	11.06	1.38
67	SLU 37	165	114	79	-9.55	11.54	1.32
67	SLU 38	124	112	161	-9.28	11	1.38
67	SLU 39	200	116	18	-9.64	12.2	1.4
67	SLU 40	159	114	100	-9.36	11.66	1.46
67	SLU 41	198	117	25	-9.77	12.3	1.41
67	SLU 42	157	115	108	-9.5	11.76	1.47
67	SLU 43	8	114	389	-9.95	9.37	1.07
67	SLU 44	-60	111	526	-9.49	8.47	1.16
67	SLU 45	8	116	395	-10.13	9.53	1.09
67	SLU 46	-33	114	477	-9.86	8.99	1.14
67	SLU 47	-62	112	533	-9.63	8.57	1.17
67	SLU 48	7	118	403	-10.27	9.62	1.1
67	SLU 49	-34	116	485	-9.99	9.08	1.15
67	SLU 50	5	117	404	-10.22	9.56	1.09
67	SLU 51	-36	115	486	-9.95	9.02	1.15
67	SLU 52	14	122	419	-10.32	10.45	1.39
67	SLU 53	83	128	289	-10.96	11.51	1.32
67	SLU 54	42	126	371	-10.68	10.97	1.37
67	SLU 55	13	124	427	-10.46	10.55	1.4
67	SLU 56	81	129	297	-11.09	11.6	1.33
67	SLU 57	40	127	379	-10.82	11.06	1.38
67	SLU 58	80	129	298	-11.04	11.54	1.32
67	SLU 59	39	127	380	-10.77	11	1.38
67	SLU 60	115	131	237	-11.13	12.2	1.4
67	SLU 61	74	128	319	-10.86	11.66	1.46
67	SLU 62	113	132	245	-11.26	12.3	1.41
67	SLU 63	72	130	327	-10.99	11.76	1.47
67	SLU 64	77	123	286	-10.58	11.08	1.27
67	SLU 65	8	120	423	-10.13	10.19	1.36
67	SLU 66	77	125	293	-10.77	11.24	1.28
67	SLU 67	36	123	375	-10.49	10.7	1.34
67	SLU 68	7	121	431	-10.27	10.28	1.37
67	SLU 69	75	127	300	-10.9	11.33	1.29
67	SLU 70	34	125	383	-10.63	10.79	1.35
67	SLU 71	74	126	302	-10.85	11.27	1.29
67	SLU 72	33	124	384	-10.58	10.73	1.34
67	SLU 73	83	131	317	-10.96	12.17	1.59
67	SLU 74	152	137	186	-11.59	13.22	1.51
67	SLU 75	110	135	269	-11.32	12.68	1.57
67	SLU 76	82	133	325	-11.09	12.26	1.6
67	SLU 77	150	138	194	-11.73	13.31	1.52
67	SLU 78	109	136	276	-11.46	12.77	1.58
67	SLU 79	149	138	195	-11.68	13.25	1.52
67	SLU 80	107	136	278	-11.41	12.71	1.57
67	SLU 81	184	140	134	-11.76	13.91	1.6
67	SLU 82	142	138	217	-11.49	13.37	1.65
67	SLU 83	182	141	142	-11.9	14.01	1.61
67	SLU 84	141	139	224	-11.63	13.47	1.66
67	SLE RA 1	44	93	243	-8	8.15	0.93

Nodo	Cont.	Reazione a traslazione			Reazione a rotazione		
Ind.	N.br.	x	y	z	x	y	z
67	SLE RA 2	-2	90	334	-7.7	7.55	0.99
67	SLE RA 3	44	94	247	-8.12	8.25	0.94
67	SLE RA 4	17	93	302	-7.94	7.89	0.98
67	SLE RA 5	-3	91	339	-7.79	7.61	1
67	SLE RA 6	43	95	252	-8.21	8.32	0.95
67	SLE RA 7	16	94	307	-8.03	7.96	0.99
67	SLE RA 8	42	95	253	-8.18	8.28	0.95
67	SLE RA 9	15	93	308	-8	7.92	0.98
67	SLE RA 10	48	98	263	-8.25	8.87	1.15
67	SLE RA 11	94	102	176	-8.67	9.57	1.1
67	SLE RA 12	66	100	231	-8.49	9.21	1.13
67	SLE RA 13	47	99	268	-8.34	8.93	1.15
67	SLE RA 14	93	103	181	-8.76	9.64	1.1
67	SLE RA 15	65	101	236	-8.58	9.28	1.14
67	SLE RA 16	92	103	182	-8.73	9.6	1.1
67	SLE RA 17	64	101	237	-8.55	9.24	1.14
67	SLE RA 18	115	104	141	-8.79	10.04	1.15
67	SLE RA 19	88	102	196	-8.61	9.68	1.19
67	SLE RA 20	114	105	147	-8.88	10.1	1.16
67	SLE RA 21	87	103	201	-8.7	9.74	1.2
67	SLE FR 1	44	93	243	-8	8.15	0.93
67	SLE FR 2	35	92	261	-7.94	8.03	0.94
67	SLE FR 3	44	93	245	-8.04	8.18	0.94
67	SLE FR 4	56	96	231	-8.18	8.6	1.01
67	SLE FR 5	65	97	214	-8.27	8.74	1
67	SLE FR 6	80	98	192	-8.39	9.09	1.04
67	SLE QP 1	44	93	243	-8	8.15	0.93
67	SLE QP 2	65	96	212	-8.24	8.72	1
67	SLD 1	553	88	-786	-6.96	15.43	1.43
67	SLD 2	553	88	-786	-6.96	15.43	1.43
67	SLD 3	693	69	-1076	-4.02	13.9	2.27
67	SLD 4	693	69	-1076	-4.02	13.9	2.27
67	SLD 5	1	122	353	-12.32	13.05	-0.14
67	SLD 6	1	122	353	-12.32	13.05	-0.14
67	SLD 7	465	60	-614	-2.51	7.95	2.65
67	SLD 8	465	60	-614	-2.51	7.95	2.65
67	SLD 9	-334	133	1039	-13.96	9.48	-0.65
67	SLD 10	-334	133	1039	-13.96	9.48	-0.65
67	SLD 11	130	70	72	-4.16	4.38	2.14
67	SLD 12	130	70	72	-4.16	4.38	2.14
67	SLD 13	-562	123	1501	-12.45	3.54	-0.27
67	SLD 14	-562	123	1501	-12.45	3.54	-0.27
67	SLD 15	-423	105	1210	-9.51	2.01	0.57
67	SLD 16	-423	105	1210	-9.51	2.01	0.57
67	SLV 1	1161	77	-2030	-5.33	24.13	1.97
67	SLV 2	1161	77	-2030	-5.33	24.13	1.97
67	SLV 3	1508	31	-2752	1.96	20.34	4.05
67	SLV 4	1508	31	-2752	1.96	20.34	4.05
67	SLV 5	-132	161	635	-18.43	19.08	-1.87
67	SLV 6	-132	161	635	-18.43	19.08	-1.87
67	SLV 7	1025	6	-1773	5.89	6.46	5.07
67	SLV 8	1025	6	-1773	5.89	6.46	5.07
67	SLV 9	-894	186	2197	-22.36	10.97	-3.08
67	SLV 10	-894	186	2197	-22.36	10.97	-3.08
67	SLV 11	263	31	-211	1.95	-1.65	3.86
67	SLV 12	263	31	-211	1.95	-1.65	3.86
67	SLV 13	-1378	162	3177	-18.44	-2.91	-2.06
67	SLV 14	-1378	162	3177	-18.44	-2.91	-2.06
67	SLV 15	-1030	115	2454	-11.14	-6.7	0.02
67	SLV 16	-1030	115	2454	-11.14	-6.7	0.02
68	SLU 1	775	12	2289	-4.29	17.71	1.36
68	SLU 2	825	11	2373	-1.21	19.53	0.45
68	SLU 3	792	13	2339	-4.46	18.12	1.42
68	SLU 4	822	12	2390	-2.6	19.21	0.87
68	SLU 5	836	12	2406	-1.31	19.79	0.48
68	SLU 6	803	13	2373	-4.56	18.39	1.45
68	SLU 7	833	13	2423	-2.71	19.48	0.9
68	SLU 8	797	13	2355	-4.5	18.24	1.43
68	SLU 9	827	12	2406	-2.65	19.33	0.88
68	SLU 10	940	12	2722	-1.53	22.08	0.55
68	SLU 11	907	14	2689	-4.78	20.68	1.52
68	SLU 12	937	13	2739	-2.93	21.77	0.97
68	SLU 13	951	13	2756	-1.63	22.34	0.59
68	SLU 14	919	14	2722	-4.88	20.94	1.55
68	SLU 15	949	13	2772	-3.03	22.03	1
68	SLU 16	913	14	2705	-4.82	20.79	1.53
68	SLU 17	943	13	2755	-2.97	21.88	0.98
68	SLU 18	939	13	2788	-4.75	21.36	1.51
68	SLU 19	969	13	2838	-2.9	22.45	0.96
68	SLU 20	951	14	2821	-4.86	21.62	1.54
68	SLU 21	981	13	2872	-3	22.71	0.99
68	SLU 22	877	13	2596	-4.64	20.06	1.48
68	SLU 23	927	12	2680	-1.56	21.88	0.56
68	SLU 24	895	14	2647	-4.81	20.48	1.53
68	SLU 25	925	13	2697	-2.96	21.57	0.98
68	SLU 26	939	13	2714	-1.67	22.14	0.6
68	SLU 27	906	14	2680	-4.92	20.74	1.56
68	SLU 28	936	13	2731	-3.06	21.83	1.01
68	SLU 29	900	14	2663	-4.86	20.59	1.54
68	SLU 30	930	13	2713	-3.01	21.68	0.99
68	SLU 31	1043	13	3030	-1.88	24.43	0.66

Nodo	Cont.	Reazione a traslazione			Reazione a rotazione		
Ind.	N.br.	x	y	z	x	y	z
68	SLU 32	1010	14	2996	-5.13	23.03	1.63
68	SLU 33	1040	14	3047	-3.28	24.12	1.08
68	SLU 34	1054	13	3063	-1.99	24.7	0.7
68	SLU 35	1021	15	3030	-5.24	23.29	1.66
68	SLU 36	1051	14	3080	-3.39	24.39	1.11
68	SLU 37	1015	15	3013	-5.18	23.15	1.64
68	SLU 38	1045	14	3063	-3.33	24.24	1.1
68	SLU 39	1042	14	3096	-5.1	23.71	1.62
68	SLU 40	1072	14	3146	-3.25	24.8	1.07
68	SLU 41	1053	15	3129	-5.21	23.97	1.65
68	SLU 42	1083	14	3179	-3.36	25.06	1.11
68	SLU 43	972	16	2870	-5.46	22.21	1.74
68	SLU 44	1022	15	2954	-2.37	24.03	0.82
68	SLU 45	989	16	2920	-5.62	22.63	1.79
68	SLU 46	1019	16	2971	-3.77	23.72	1.24
68	SLU 47	1033	15	2987	-2.48	24.3	0.86
68	SLU 48	1000	17	2954	-5.73	22.89	1.82
68	SLU 49	1030	16	3004	-3.88	23.98	1.27
68	SLU 50	994	16	2937	-5.67	22.74	1.8
68	SLU 51	1024	16	2987	-3.82	23.84	1.25
68	SLU 52	1137	16	3303	-2.69	26.58	0.92
68	SLU 53	1104	17	3270	-5.94	25.18	1.89
68	SLU 54	1134	16	3320	-4.09	26.27	1.34
68	SLU 55	1148	16	3337	-2.8	26.85	0.96
68	SLU 56	1116	17	3303	-6.05	25.45	1.92
68	SLU 57	1146	17	3354	-4.2	26.54	1.37
68	SLU 58	1110	17	3286	-5.99	25.3	1.9
68	SLU 59	1140	17	3336	-4.14	26.39	1.36
68	SLU 60	1137	17	3369	-5.91	25.86	1.88
68	SLU 61	1167	16	3420	-4.06	26.95	1.33
68	SLU 62	1148	17	3403	-6.02	26.13	1.91
68	SLU 63	1178	17	3453	-4.17	27.22	1.37
68	SLU 64	1075	17	3178	-5.81	24.57	1.85
68	SLU 65	1124	16	3262	-2.73	26.38	0.93
68	SLU 66	1092	17	3228	-5.98	24.98	1.9
68	SLU 67	1122	17	3278	-4.12	26.07	1.35
68	SLU 68	1136	16	3295	-2.83	26.65	0.97
68	SLU 69	1103	17	3261	-6.08	25.25	1.93
68	SLU 70	1133	17	3312	-4.23	26.34	1.38
68	SLU 71	1097	17	3244	-6.02	25.1	1.91
68	SLU 72	1127	17	3295	-4.17	26.19	1.37
68	SLU 73	1240	16	3611	-3.05	28.94	1.03
68	SLU 74	1207	18	3577	-6.3	27.54	2
68	SLU 75	1237	17	3628	-4.45	28.63	1.45
68	SLU 76	1251	17	3644	-3.15	29.2	1.07
68	SLU 77	1218	18	3611	-6.4	27.8	2.03
68	SLU 78	1248	18	3661	-4.55	28.89	1.49
68	SLU 79	1213	18	3594	-6.34	27.65	2.02
68	SLU 80	1242	17	3644	-4.49	28.74	1.47
68	SLU 81	1239	18	3677	-6.27	28.22	1.99
68	SLU 82	1269	17	3727	-4.42	29.31	1.44
68	SLU 83	1251	18	3710	-6.37	28.48	2.03
68	SLU 84	1281	17	3760	-4.52	29.57	1.48
68	SLE RA 1	804	13	2377	-4.39	18.38	1.4
68	SLE RA 2	837	12	2433	-2.33	19.59	0.79
68	SLE RA 3	815	13	2410	-4.5	18.66	1.43
68	SLE RA 4	835	13	2444	-3.27	19.38	1.07
68	SLE RA 5	845	12	2455	-2.41	19.77	0.81
68	SLE RA 6	823	13	2433	-4.57	18.83	1.45
68	SLE RA 7	843	13	2466	-3.34	19.56	1.09
68	SLE RA 8	819	13	2421	-4.53	18.73	1.44
68	SLE RA 9	839	13	2455	-3.3	19.46	1.08
68	SLE RA 10	914	13	2666	-2.55	21.29	0.85
68	SLE RA 11	892	13	2643	-4.72	20.36	1.5
68	SLE RA 12	912	13	2677	-3.48	21.09	1.13
68	SLE RA 13	922	13	2688	-2.62	21.47	0.88
68	SLE RA 14	900	14	2666	-4.79	20.54	1.52
68	SLE RA 15	920	13	2699	-3.55	21.26	1.16
68	SLE RA 16	896	14	2654	-4.75	20.44	1.51
68	SLE RA 17	916	13	2688	-3.51	21.16	1.14
68	SLE RA 18	914	13	2709	-4.7	20.81	1.49
68	SLE RA 19	934	13	2743	-3.46	21.54	1.13
68	SLE RA 20	921	14	2732	-4.77	20.99	1.52
68	SLE RA 21	941	13	2765	-3.53	21.72	1.15
68	SLE FR 1	804	13	2377	-4.39	18.38	1.4
68	SLE FR 2	811	12	2388	-3.98	18.62	1.27
68	SLE FR 3	807	13	2386	-4.42	18.45	1.41
68	SLE FR 4	844	13	2488	-4.07	19.35	1.3
68	SLE FR 5	840	13	2485	-4.51	19.18	1.43
68	SLE FR 6	859	13	2543	-4.54	19.6	1.44
68	SLE QP 1	804	13	2377	-4.39	18.38	1.4
68	SLE QP 2	837	13	2477	-4.48	19.11	1.43
68	SLD 1	1300	17	3699	-6.92	34.85	2.17
68	SLD 2	1300	17	3699	-6.92	34.85	2.17
68	SLD 3	1205	-8	3440	3.43	32.32	-1.03
68	SLD 4	1205	-8	3440	3.43	32.32	-1.03
68	SLD 5	1119	52	3235	-20.92	27.67	6.49
68	SLD 6	1119	52	3235	-20.92	27.67	6.49
68	SLD 7	804	-31	2374	13.6	19.23	-4.15
68	SLD 8	804	-31	2374	13.6	19.23	-4.15
68	SLD 9	870	57	2579	-22.56	18.99	7

Nodo	Cont.	Reazione a traslazione			Reazione a rotazione		
Ind.	N.br.	x	y	z	x	y	z
68	SLD 10	870	57	2579	-22.56	18.99	7
68	SLD 11	555	-26	1718	11.95	10.55	-3.64
68	SLD 12	555	-26	1718	11.95	10.55	-3.64
68	SLD 13	469	34	1513	-12.4	5.9	3.88
68	SLD 14	469	34	1513	-12.4	5.9	3.88
68	SLD 15	374	9	1254	-2.04	3.37	0.68
68	SLD 16	374	9	1254	-2.04	3.37	0.68
68	SLV 1	1893	23	5267	-10.61	55.04	3.29
68	SLV 2	1893	23	5267	-10.61	55.04	3.29
68	SLV 3	1669	-40	4653	15.41	49.02	-4.73
68	SLV 4	1669	-40	4653	15.41	49.02	-4.73
68	SLV 5	1494	111	4246	-45.79	39.02	14.15
68	SLV 6	1494	111	4246	-45.79	39.02	14.15
68	SLV 7	747	-98	2197	40.96	18.95	-12.58
68	SLV 8	747	-98	2197	40.96	18.95	-12.58
68	SLV 9	927	123	2756	-49.92	19.27	15.43
68	SLV 10	927	123	2756	-49.92	19.27	15.43
68	SLV 11	180	-85	707	36.83	-0.8	-11.3
68	SLV 12	180	-85	707	36.83	-0.8	-11.3
68	SLV 13	5	65	300	-24.38	-10.8	7.58
68	SLV 14	5	65	300	-24.38	-10.8	7.58
68	SLV 15	-219	3	-314	1.65	-16.82	-0.44
68	SLV 16	-219	3	-314	1.65	-16.82	-0.44
69	SLU 1	485	12	3891	-7.41	14.74	0.15
69	SLU 2	544	3	3960	-1.31	17.92	0.03
69	SLU 3	496	12	3977	-7.7	15.08	0.15
69	SLU 4	532	7	4018	-4.04	16.99	0.08
69	SLU 5	551	3	4017	-1.49	18.13	0.03
69	SLU 6	503	12	4033	-7.88	15.3	0.15
69	SLU 7	539	7	4074	-4.22	17.2	0.08
69	SLU 8	499	12	4005	-7.78	15.16	0.15
69	SLU 9	535	7	4046	-4.12	17.07	0.08
69	SLU 10	613	4	4564	-1.88	19.9	0.04
69	SLU 11	565	13	4581	-8.28	17.07	0.17
69	SLU 12	600	8	4622	-4.61	18.97	0.1
69	SLU 13	620	4	4621	-2.07	20.11	0.05
69	SLU 14	572	13	4637	-8.46	17.28	0.17
69	SLU 15	607	8	4678	-4.8	19.18	0.1
69	SLU 16	568	13	4609	-8.36	17.15	0.17
69	SLU 17	603	8	4650	-4.69	19.05	0.1
69	SLU 18	583	13	4754	-8.23	17.58	0.17
69	SLU 19	619	8	4795	-4.57	19.48	0.1
69	SLU 20	590	13	4811	-8.42	17.79	0.17
69	SLU 21	626	8	4852	-4.76	19.69	0.1
69	SLU 22	548	13	4418	-8.04	16.64	0.16
69	SLU 23	607	4	4486	-1.94	19.81	0.04
69	SLU 24	559	13	4503	-8.33	16.98	0.17
69	SLU 25	594	8	4544	-4.67	18.88	0.1
69	SLU 26	614	4	4543	-2.12	20.02	0.05
69	SLU 27	566	13	4560	-8.52	17.19	0.17
69	SLU 28	601	8	4601	-4.85	19.09	0.1
69	SLU 29	562	13	4531	-8.41	17.06	0.17
69	SLU 30	597	8	4572	-4.75	18.96	0.1
69	SLU 31	676	5	5090	-2.52	21.8	0.06
69	SLU 32	627	14	5107	-8.91	18.96	0.18
69	SLU 33	663	9	5148	-5.25	20.87	0.11
69	SLU 34	683	5	5147	-2.7	22.01	0.06
69	SLU 35	634	14	5164	-9.09	19.17	0.19
69	SLU 36	670	9	5205	-5.43	21.08	0.12
69	SLU 37	630	14	5135	-8.99	19.04	0.18
69	SLU 38	666	9	5176	-5.33	20.95	0.11
69	SLU 39	646	14	5280	-8.87	19.47	0.18
69	SLU 40	681	9	5321	-5.2	21.38	0.11
69	SLU 41	653	14	5337	-9.05	19.68	0.19
69	SLU 42	688	9	5378	-5.39	21.59	0.12
69	SLU 43	609	15	4878	-9.42	18.52	0.18
69	SLU 44	668	6	4947	-3.31	21.69	0.06
69	SLU 45	620	15	4963	-9.71	18.86	0.19
69	SLU 46	656	10	5005	-6.04	20.76	0.12
69	SLU 47	675	7	5004	-3.5	21.9	0.07
69	SLU 48	627	15	5020	-9.89	19.07	0.19
69	SLU 49	663	10	5061	-6.23	20.97	0.12
69	SLU 50	623	15	4992	-9.79	18.94	0.19
69	SLU 51	659	10	5033	-6.12	20.84	0.12
69	SLU 52	737	7	5551	-3.89	23.67	0.08
69	SLU 53	689	16	5567	-10.28	20.84	0.2
69	SLU 54	724	11	5609	-6.62	22.75	0.13
69	SLU 55	744	8	5608	-4.07	23.88	0.08
69	SLU 56	696	16	5624	-10.47	21.05	0.21
69	SLU 57	731	11	5665	-6.8	22.96	0.14
69	SLU 58	692	16	5596	-10.36	20.92	0.21
69	SLU 59	727	11	5637	-6.7	22.83	0.13
69	SLU 60	707	16	5741	-10.24	21.35	0.21
69	SLU 61	743	11	5782	-6.58	23.25	0.14
69	SLU 62	714	16	5798	-10.42	21.56	0.21
69	SLU 63	750	11	5839	-6.76	23.47	0.14
69	SLU 64	672	16	5405	-10.05	20.41	0.2
69	SLU 65	731	7	5473	-3.95	23.58	0.08
69	SLU 66	683	16	5490	-10.34	20.75	0.2
69	SLU 67	718	11	5531	-6.68	22.66	0.13
69	SLU 68	738	8	5530	-4.13	23.8	0.08

Nodo	Cont.	Reazione a traslazione			Reazione a rotazione		
Ind.	N.br.	x	y	z	x	y	z
69	SLU 69	690	16	5547	-10.52	20.96	0.21
69	SLU 70	725	11	5588	-6.86	22.87	0.14
69	SLU 71	686	16	5518	-10.42	20.83	0.21
69	SLU 72	721	11	5559	-6.76	22.74	0.13
69	SLU 73	800	8	6077	-4.52	25.57	0.1
69	SLU 74	751	17	6094	-10.92	22.74	0.22
69	SLU 75	787	12	6135	-7.25	24.64	0.15
69	SLU 76	807	9	6134	-4.71	25.78	0.1
69	SLU 77	758	17	6151	-11.1	22.95	0.22
69	SLU 78	794	12	6192	-7.44	24.85	0.15
69	SLU 79	754	17	6122	-10.99	22.82	0.22
69	SLU 80	790	12	6163	-7.33	24.72	0.15
69	SLU 81	770	17	6267	-10.87	23.25	0.22
69	SLU 82	805	12	6308	-7.21	25.15	0.15
69	SLU 83	777	17	6324	-11.06	23.46	0.23
69	SLU 84	812	12	6365	-7.39	25.36	0.15
69	SLE RA 1	503	12	4042	-7.59	15.28	0.15
69	SLE RA 2	542	6	4087	-3.52	17.4	0.07
69	SLE RA 3	510	12	4098	-7.79	15.51	0.15
69	SLE RA 4	534	9	4126	-5.34	16.78	0.11
69	SLE RA 5	547	6	4125	-3.65	17.54	0.07
69	SLE RA 6	515	12	4136	-7.91	15.65	0.16
69	SLE RA 7	539	9	4164	-5.47	16.92	0.11
69	SLE RA 8	512	12	4117	-7.84	15.57	0.15
69	SLE RA 9	536	9	4145	-5.4	16.83	0.11
69	SLE RA 10	588	7	4490	-3.91	18.72	0.08
69	SLE RA 11	556	13	4501	-8.17	16.83	0.16
69	SLE RA 12	580	9	4529	-5.73	18.1	0.12
69	SLE RA 13	593	7	4528	-4.03	18.86	0.08
69	SLE RA 14	561	13	4539	-8.29	16.98	0.17
69	SLE RA 15	584	10	4566	-5.85	18.24	0.12
69	SLE RA 16	558	13	4520	-8.22	16.89	0.17
69	SLE RA 17	582	10	4547	-5.78	18.16	0.12
69	SLE RA 18	568	13	4617	-8.14	17.17	0.17
69	SLE RA 19	592	9	4644	-5.7	18.44	0.12
69	SLE RA 20	573	13	4655	-8.26	17.31	0.17
69	SLE RA 21	597	10	4682	-5.82	18.58	0.12
69	SLE FR 1	503	12	4042	-7.59	15.28	0.15
69	SLE FR 2	511	11	4051	-6.78	15.71	0.13
69	SLE FR 3	505	12	4057	-7.64	15.34	0.15
69	SLE FR 4	530	11	4223	-6.94	16.27	0.14
69	SLE FR 5	524	12	4229	-7.81	15.91	0.16
69	SLE FR 6	536	12	4329	-7.87	16.23	0.16
69	SLE QP 1	503	12	4042	-7.59	15.28	0.15
69	SLE QP 2	523	12	4214	-7.76	15.85	0.15
69	SLD 1	914	18	5917	-12.1	34.7	0.33
69	SLD 2	914	18	5917	-12.1	34.7	0.33
69	SLD 3	841	-8	5500	6.16	31.71	0.11
69	SLD 4	841	-8	5500	6.16	31.71	0.11
69	SLD 5	749	54	5358	-36.76	26.05	0.54
69	SLD 6	749	54	5358	-36.76	26.05	0.54
69	SLD 7	509	-34	3967	24.12	16.06	-0.19
69	SLD 8	509	-34	3967	24.12	16.06	-0.19
69	SLD 9	536	59	4461	-39.63	15.64	0.5
69	SLD 10	536	59	4461	-39.63	15.64	0.5
69	SLD 11	296	-30	3071	21.25	5.65	-0.24
69	SLD 12	296	-30	3071	21.25	5.65	-0.24
69	SLD 13	204	32	2929	-21.67	0	0.2
69	SLD 14	204	32	2929	-21.67	0	0.2
69	SLD 15	131	6	2512	-3.41	-3	-0.02
69	SLD 16	131	6	2512	-3.41	-3	-0.02
69	SLV 1	1415	28	8104	-18.69	58.92	0.6
69	SLV 2	1415	28	8104	-18.69	58.92	0.6
69	SLV 3	1244	-39	7110	27.23	51.75	0.04
69	SLV 4	1244	-39	7110	27.23	51.75	0.04
69	SLV 5	1050	118	6887	-80.69	39.64	1.14
69	SLV 6	1050	118	6887	-80.69	39.64	1.14
69	SLV 7	479	-104	3577	72.4	15.76	-0.73
69	SLV 8	479	-104	3577	72.4	15.76	-0.73
69	SLV 9	566	129	4852	-87.91	15.95	1.04
69	SLV 10	566	129	4852	-87.91	15.95	1.04
69	SLV 11	-5	-94	1541	65.18	-7.93	-0.83
69	SLV 12	-5	-94	1541	65.18	-7.93	-0.83
69	SLV 13	-199	63	1318	-42.75	-20.05	0.27
69	SLV 14	-199	63	1318	-42.75	-20.05	0.27
69	SLV 15	-370	-4	325	3.18	-27.21	-0.29
69	SLV 16	-370	-4	325	3.18	-27.21	-0.29
70	SLU 1	28	-2	4549	-12.54	4.53	-0.11
70	SLU 2	164	-41	4728	-4.25	10.05	0.37
70	SLU 3	30	0	4638	-12.97	4.63	-0.12
70	SLU 4	111	-23	4746	-8	7.95	0.17
70	SLU 5	164	-39	4787	-4.56	10.1	0.36
70	SLU 6	30	2	4697	-13.28	4.69	-0.12
70	SLU 7	111	-21	4805	-8.31	8	0.17
70	SLU 8	29	1	4667	-13.16	4.63	-0.12
70	SLU 9	110	-22	4775	-8.19	7.95	0.17
70	SLU 10	151	-30	5383	-5.65	10.32	0.34
70	SLU 11	17	11	5293	-14.36	4.91	-0.14
70	SLU 12	98	-12	5401	-9.39	8.22	0.15
70	SLU 13	151	-28	5443	-5.96	10.38	0.34
70	SLU 14	17	13	5353	-14.67	4.96	-0.14

Nodo	Cont.	Reazione a traslazione			Reazione a rotazione		
Ind.	N.br.	x	y	z	x	y	z
70	SLU 15	98	-10	5460	-9.7	8.27	0.15
70	SLU 16	16	13	5322	-14.55	4.91	-0.14
70	SLU 17	97	-10	5430	-9.58	8.22	0.15
70	SLU 18	9	14	5485	-14.53	4.92	-0.14
70	SLU 19	91	-9	5593	-9.56	8.23	0.14
70	SLU 20	10	16	5544	-14.84	4.97	-0.15
70	SLU 21	91	-7	5652	-9.87	8.28	0.14
70	SLU 22	25	8	5112	-13.86	4.98	-0.13
70	SLU 23	161	-31	5292	-5.58	10.5	0.35
70	SLU 24	27	10	5202	-14.29	5.08	-0.14
70	SLU 25	108	-13	5309	-9.32	8.4	0.15
70	SLU 26	161	-29	5351	-5.89	10.55	0.35
70	SLU 27	27	12	5261	-14.6	5.14	-0.14
70	SLU 28	109	-11	5369	-9.63	8.45	0.15
70	SLU 29	26	11	5231	-14.48	5.08	-0.13
70	SLU 30	107	-12	5339	-9.51	8.4	0.15
70	SLU 31	148	-20	5947	-6.97	10.77	0.33
70	SLU 32	14	21	5857	-15.69	5.36	-0.16
70	SLU 33	95	-2	5965	-10.71	8.67	0.13
70	SLU 34	148	-18	6007	-7.28	10.83	0.33
70	SLU 35	14	23	5916	-16	5.41	-0.16
70	SLU 36	96	0	6024	-11.02	8.72	0.13
70	SLU 37	13	22	5886	-15.88	5.36	-0.16
70	SLU 38	94	-1	5994	-10.9	8.67	0.13
70	SLU 39	7	24	6049	-15.85	5.37	-0.16
70	SLU 40	88	1	6156	-10.88	8.68	0.13
70	SLU 41	7	25	6108	-16.16	5.42	-0.16
70	SLU 42	88	2	6216	-11.19	8.74	0.12
70	SLU 43	37	-6	5720	-15.85	5.73	-0.14
70	SLU 44	173	-45	5899	-7.56	11.25	0.34
70	SLU 45	39	-4	5809	-16.28	5.83	-0.15
70	SLU 46	121	-27	5917	-11.3	9.15	0.14
70	SLU 47	173	-43	5959	-7.87	11.31	0.34
70	SLU 48	39	-2	5868	-16.59	5.89	-0.15
70	SLU 49	121	-25	5976	-11.62	9.2	0.14
70	SLU 50	38	-3	5838	-16.47	5.84	-0.14
70	SLU 51	119	-26	5946	-11.5	9.15	0.14
70	SLU 52	160	-34	6555	-8.95	11.53	0.32
70	SLU 53	26	7	6465	-17.67	6.11	-0.17
70	SLU 54	107	-16	6572	-12.7	9.42	0.12
70	SLU 55	160	-32	6614	-9.26	11.58	0.32
70	SLU 56	26	9	6524	-17.98	6.16	-0.17
70	SLU 57	108	-14	6631	-13.01	9.48	0.12
70	SLU 58	25	9	6494	-17.86	6.11	-0.17
70	SLU 59	106	-14	6601	-12.89	9.42	0.12
70	SLU 60	19	10	6656	-17.84	6.12	-0.17
70	SLU 61	100	-13	6764	-12.87	9.43	0.12
70	SLU 62	19	12	6715	-18.15	6.17	-0.17
70	SLU 63	100	-11	6823	-13.18	9.49	0.11
70	SLU 64	35	4	6284	-17.17	6.18	-0.16
70	SLU 65	170	-35	6463	-8.88	11.7	0.32
70	SLU 66	36	6	6373	-17.6	6.29	-0.16
70	SLU 67	118	-17	6481	-12.63	9.6	0.12
70	SLU 68	171	-33	6522	-9.19	11.76	0.32
70	SLU 69	37	8	6432	-17.91	6.34	-0.17
70	SLU 70	118	-15	6540	-12.94	9.65	0.12
70	SLU 71	35	7	6402	-17.79	6.29	-0.16
70	SLU 72	117	-16	6510	-12.82	9.6	0.13
70	SLU 73	157	-24	7119	-10.28	11.98	0.3
70	SLU 74	23	17	7028	-18.99	6.56	-0.19
70	SLU 75	105	-6	7136	-14.02	9.87	0.1
70	SLU 76	157	-22	7178	-10.59	12.03	0.3
70	SLU 77	24	19	7088	-19.3	6.61	-0.19
70	SLU 78	105	-4	7195	-14.33	9.93	0.1
70	SLU 79	22	18	7058	-19.18	6.56	-0.18
70	SLU 80	104	-5	7165	-14.21	9.87	0.1
70	SLU 81	16	20	7220	-19.16	6.57	-0.19
70	SLU 82	97	-3	7328	-14.19	9.89	0.1
70	SLU 83	16	21	7279	-19.47	6.63	-0.19
70	SLU 84	98	-2	7387	-14.5	9.94	0.1
70	SLE RA 1	27	1	4710	-12.92	4.65	-0.12
70	SLE RA 2	118	-25	4829	-7.39	8.34	0.2
70	SLE RA 3	28	2	4769	-13.2	4.73	-0.12
70	SLE RA 4	83	-13	4841	-9.89	6.93	0.07
70	SLE RA 5	118	-24	4869	-7.6	8.37	0.2
70	SLE RA 6	29	3	4809	-13.41	4.76	-0.12
70	SLE RA 7	83	-12	4881	-10.1	6.97	0.07
70	SLE RA 8	28	3	4789	-13.33	4.73	-0.12
70	SLE RA 9	82	-12	4860	-10.02	6.94	0.07
70	SLE RA 10	109	-18	5266	-8.32	8.52	0.19
70	SLE RA 11	20	10	5206	-14.13	4.91	-0.14
70	SLE RA 12	74	-6	5278	-10.82	7.12	0.06
70	SLE RA 13	109	-16	5306	-8.53	8.56	0.19
70	SLE RA 14	20	11	5246	-14.34	4.94	-0.14
70	SLE RA 15	74	-5	5317	-11.02	7.15	0.05
70	SLE RA 16	19	11	5226	-14.26	4.91	-0.14
70	SLE RA 17	73	-5	5297	-10.95	7.12	0.06
70	SLE RA 18	15	11	5334	-14.24	4.92	-0.14
70	SLE RA 19	69	-4	5406	-10.93	7.13	0.05
70	SLE RA 20	15	13	5373	-14.45	4.95	-0.14
70	SLE RA 21	69	-3	5445	-11.14	7.16	0.05

Nodo	Cont.	Reazione a traslazione			Reazione a rotazione		
Ind.	N.br.	x	y	z	x	y	z
70	SLE FR 1	27	1	4710	-12.92	4.65	-0.12
70	SLE FR 2	45	-5	4734	-11.81	5.39	-0.05
70	SLE FR 3	27	1	4725	-13	4.67	-0.12
70	SLE FR 4	42	-1	4921	-12.21	5.47	-0.06
70	SLE FR 5	24	4	4913	-13.4	4.75	-0.13
70	SLE FR 6	21	6	5022	-13.58	4.79	-0.13
70	SLE QP 1	27	1	4710	-12.92	4.65	-0.12
70	SLE QP 2	24	4	4897	-13.32	4.73	-0.12
70	SLD 1	636	32	6389	-18.02	26.87	0.62
70	SLD 2	636	32	6389	-18.02	26.87	0.62
70	SLD 3	541	-129	5668	2.17	19.9	1.91
70	SLD 4	541	-129	5668	2.17	19.9	1.91
70	SLD 5	351	257	6439	-45.35	21.95	-1.85
70	SLD 6	351	257	6439	-45.35	21.95	-1.85
70	SLD 7	35	-281	4034	21.95	-1.3	2.43
70	SLD 8	35	-281	4034	21.95	-1.3	2.43
70	SLD 9	12	289	5760	-48.58	10.76	-2.68
70	SLD 10	12	289	5760	-48.58	10.76	-2.68
70	SLD 11	-304	-250	3355	18.72	-12.49	1.6
70	SLD 12	-304	-250	3355	18.72	-12.49	1.6
70	SLD 13	-494	137	4126	-28.8	-10.43	-2.16
70	SLD 14	-494	137	4126	-28.8	-10.43	-2.16
70	SLD 15	-588	-25	3405	-8.61	-17.4	-0.87
70	SLD 16	-588	-25	3405	-8.61	-17.4	-0.87
70	SLV 1	1426	79	8360	-25.22	56.05	1.61
70	SLV 2	1426	79	8360	-25.22	56.05	1.61
70	SLV 3	1195	-323	6571	25.49	39.35	4.68
70	SLV 4	1195	-323	6571	25.49	39.35	4.68
70	SLV 5	795	636	8649	-93.79	45.46	-4.26
70	SLV 6	795	636	8649	-93.79	45.46	-4.26
70	SLV 7	24	-704	2686	75.23	-10.21	5.97
70	SLV 8	24	-704	2686	75.23	-10.21	5.97
70	SLV 9	23	711	7107	-101.86	19.68	-6.22
70	SLV 10	23	711	7107	-101.86	19.68	-6.22
70	SLV 11	-748	-628	1145	67.16	-35.99	4.01
70	SLV 12	-748	-628	1145	67.16	-35.99	4.01
70	SLV 13	-1148	331	3223	-52.12	-29.88	-4.93
70	SLV 14	-1148	331	3223	-52.12	-29.88	-4.93
70	SLV 15	-1379	-71	1434	-1.41	-46.58	-1.86
70	SLV 16	-1379	-71	1434	-1.41	-46.58	-1.86
71	SLU 1	53	6	4951	-6.48	4.44	-0.06
71	SLU 2	222	-4	5091	2.17	11.48	0.02
71	SLU 3	56	6	5056	-6.74	4.62	-0.06
71	SLU 4	157	0	5140	-1.55	8.85	-0.01
71	SLU 5	222	-4	5162	2.01	11.55	0.02
71	SLU 6	57	6	5127	-6.91	4.69	-0.06
71	SLU 7	158	0	5211	-1.71	8.92	-0.01
71	SLU 8	55	6	5093	-6.81	4.58	-0.06
71	SLU 9	156	0	5177	-1.61	8.8	-0.01
71	SLU 10	207	-3	5840	1.56	11.15	0.01
71	SLU 11	41	7	5804	-7.35	4.29	-0.07
71	SLU 12	142	1	5889	-2.16	8.52	-0.02
71	SLU 13	207	-3	5911	1.4	11.22	0.01
71	SLU 14	42	7	5875	-7.52	4.36	-0.07
71	SLU 15	143	1	5960	-2.32	8.59	-0.02
71	SLU 16	40	7	5841	-7.42	4.25	-0.07
71	SLU 17	141	1	5925	-2.22	8.48	-0.02
71	SLU 18	32	7	6020	-7.35	3.97	-0.07
71	SLU 19	133	1	6104	-2.16	8.2	-0.02
71	SLU 20	33	7	6091	-7.51	4.04	-0.07
71	SLU 21	134	1	6175	-2.32	8.27	-0.02
71	SLU 22	52	7	5594	-7.13	4.71	-0.07
71	SLU 23	220	-3	5735	1.52	11.76	0.01
71	SLU 24	54	7	5699	-7.39	4.89	-0.07
71	SLU 25	155	1	5783	-2.2	9.12	-0.02
71	SLU 26	221	-3	5805	1.36	11.82	0.01
71	SLU 27	55	7	5770	-7.56	4.96	-0.07
71	SLU 28	156	1	5854	-2.37	9.19	-0.02
71	SLU 29	53	7	5736	-7.46	4.85	-0.07
71	SLU 30	154	1	5820	-2.27	9.08	-0.02
71	SLU 31	205	-2	6483	0.91	11.43	0
71	SLU 32	39	8	6448	-8	4.57	-0.08
71	SLU 33	140	2	6532	-2.81	8.79	-0.03
71	SLU 34	206	-2	6554	0.75	11.5	0
71	SLU 35	40	8	6519	-8.17	4.63	-0.08
71	SLU 36	141	2	6603	-2.98	8.86	-0.03
71	SLU 37	38	8	6485	-8.07	4.52	-0.08
71	SLU 38	139	2	6569	-2.88	8.75	-0.03
71	SLU 39	30	8	6664	-8	4.24	-0.08
71	SLU 40	131	2	6748	-2.81	8.47	-0.03
71	SLU 41	31	8	6735	-8.17	4.31	-0.08
71	SLU 42	132	2	6819	-2.97	8.54	-0.03
71	SLU 43	70	8	6215	-8.2	5.68	-0.07
71	SLU 44	238	-2	6356	0.45	12.72	0.01
71	SLU 45	73	8	6320	-8.46	5.86	-0.07
71	SLU 46	174	2	6405	-3.27	10.09	-0.03
71	SLU 47	239	-2	6427	0.29	12.79	0.01
71	SLU 48	73	8	6391	-8.63	5.93	-0.08
71	SLU 49	174	2	6476	-3.43	10.16	-0.03
71	SLU 50	71	8	6357	-8.53	5.82	-0.07
71	SLU 51	172	2	6441	-3.33	10.04	-0.03

Nodo	Cont.	Reazione a traslazione			Reazione a rotazione		
Ind.	N.br.	x	y	z	x	y	z
71	SLU 52	223	-2	7104	-0.15	12.39	0
71	SLU 53	58	9	7069	-9.07	5.53	-0.08
71	SLU 54	159	3	7153	-3.88	9.76	-0.04
71	SLU 55	224	-2	7175	-0.32	12.46	0
71	SLU 56	58	9	7140	-9.23	5.6	-0.08
71	SLU 57	159	3	7224	-4.04	9.83	-0.04
71	SLU 58	56	9	7106	-9.14	5.49	-0.08
71	SLU 59	157	3	7190	-3.94	9.71	-0.04
71	SLU 60	49	9	7285	-9.07	5.21	-0.08
71	SLU 61	150	3	7369	-3.88	9.43	-0.04
71	SLU 62	49	9	7356	-9.23	5.28	-0.09
71	SLU 63	150	3	7440	-4.04	9.5	-0.04
71	SLU 64	68	8	6859	-8.85	5.95	-0.08
71	SLU 65	236	-2	6999	-0.2	12.99	0
71	SLU 66	71	9	6964	-9.11	6.13	-0.08
71	SLU 67	172	3	7048	-3.92	10.36	-0.03
71	SLU 68	237	-2	7070	-0.36	13.06	0
71	SLU 69	72	9	7035	-9.28	6.2	-0.08
71	SLU 70	173	3	7119	-4.09	10.43	-0.04
71	SLU 71	70	9	7001	-9.18	6.09	-0.08
71	SLU 72	171	3	7085	-3.99	10.32	-0.04
71	SLU 73	221	-1	7748	-0.81	12.66	-0.01
71	SLU 74	56	9	7712	-9.72	5.8	-0.09
71	SLU 75	157	3	7797	-4.53	10.03	-0.04
71	SLU 76	222	-1	7819	-0.97	12.73	-0.01
71	SLU 77	57	10	7783	-9.89	5.87	-0.09
71	SLU 78	158	4	7868	-4.7	10.1	-0.04
71	SLU 79	55	9	7749	-9.79	5.76	-0.09
71	SLU 80	156	3	7833	-4.6	9.99	-0.04
71	SLU 81	47	10	7928	-9.72	5.48	-0.09
71	SLU 82	148	3	8012	-4.53	9.71	-0.05
71	SLU 83	48	10	7999	-9.89	5.55	-0.09
71	SLU 84	149	4	8083	-4.69	9.78	-0.05
71	SLE RA 1	53	6	5135	-6.66	4.52	-0.06
71	SLE RA 2	165	0	5228	-0.9	9.21	-0.01
71	SLE RA 3	55	6	5205	-6.84	4.64	-0.06
71	SLE RA 4	122	2	5261	-3.38	7.46	-0.03
71	SLE RA 5	166	0	5275	-1.01	9.26	-0.01
71	SLE RA 6	55	7	5252	-6.95	4.69	-0.06
71	SLE RA 7	122	3	5308	-3.49	7.5	-0.03
71	SLE RA 8	54	6	5229	-6.88	4.61	-0.06
71	SLE RA 9	121	2	5285	-3.42	7.43	-0.03
71	SLE RA 10	155	0	5727	-1.3	8.99	-0.01
71	SLE RA 11	45	7	5704	-7.25	4.42	-0.07
71	SLE RA 12	112	3	5760	-3.79	7.24	-0.04
71	SLE RA 13	156	0	5775	-1.41	9.04	-0.01
71	SLE RA 14	45	7	5751	-7.36	4.47	-0.07
71	SLE RA 15	112	3	5807	-3.89	7.28	-0.04
71	SLE RA 16	44	7	5728	-7.29	4.39	-0.07
71	SLE RA 17	111	3	5784	-3.83	7.21	-0.04
71	SLE RA 18	39	7	5848	-7.25	4.2	-0.07
71	SLE RA 19	106	3	5904	-3.78	7.02	-0.04
71	SLE RA 20	39	7	5895	-7.35	4.25	-0.07
71	SLE RA 21	106	3	5951	-3.89	7.07	-0.04
71	SLE FR 1	53	6	5135	-6.66	4.52	-0.06
71	SLE FR 2	75	5	5153	-5.51	5.46	-0.05
71	SLE FR 3	53	6	5154	-6.71	4.54	-0.06
71	SLE FR 4	71	5	5367	-5.68	5.36	-0.05
71	SLE FR 5	49	7	5367	-6.88	4.44	-0.06
71	SLE FR 6	46	7	5491	-6.95	4.36	-0.06
71	SLE QP 1	53	6	5135	-6.66	4.52	-0.06
71	SLE QP 2	49	7	5349	-6.84	4.42	-0.06
71	SLD 1	780	16	6430	-19.56	42.72	-0.07
71	SLD 2	780	16	6430	-19.56	42.72	-0.07
71	SLD 3	655	6	5909	-3.29	37.68	-0.13
71	SLD 4	655	6	5909	-3.29	37.68	-0.13
71	SLD 5	458	25	6463	-35.33	23.54	0.02
71	SLD 6	458	25	6463	-35.33	23.54	0.02
71	SLD 7	40	-9	4727	18.9	6.77	-0.17
71	SLD 8	40	-9	4727	18.9	6.77	-0.17
71	SLD 9	57	22	5970	-32.57	2.08	0.05
71	SLD 10	57	22	5970	-32.57	2.08	0.05
71	SLD 11	-361	-12	4234	21.65	-14.7	-0.15
71	SLD 12	-361	-12	4234	21.65	-14.7	-0.15
71	SLD 13	-558	7	4788	-10.39	-28.84	0.01
71	SLD 14	-558	7	4788	-10.39	-28.84	0.01
71	SLD 15	-683	-3	4267	5.88	-33.87	-0.05
71	SLD 16	-683	-3	4267	5.88	-33.87	-0.05
71	SLV 1	1725	30	7822	-38.71	91.99	-0.08
71	SLV 2	1725	30	7822	-38.71	91.99	-0.08
71	SLV 3	1419	5	6601	2.26	79.77	-0.23
71	SLV 4	1419	5	6601	2.26	79.77	-0.23
71	SLV 5	1016	52	7941	-78.53	49.22	0.16
71	SLV 6	1016	52	7941	-78.53	49.22	0.16
71	SLV 7	-5	-32	3873	58.02	8.5	-0.34
71	SLV 8	-5	-32	3873	58.02	8.5	-0.34
71	SLV 9	102	45	6824	-71.7	0.35	0.22
71	SLV 10	102	45	6824	-71.7	0.35	0.22
71	SLV 11	-919	-39	2756	64.85	-40.37	-0.28
71	SLV 12	-919	-39	2756	64.85	-40.37	-0.28
71	SLV 13	-1322	8	4096	-15.94	-70.92	0.11

Nodo	Cont.	Reazione a traslazione			Reazione a rotazione		
Ind.	N.br.	x	y	z	x	y	z
71	SLV 14	-1322	8	4096	-15.94	-70.92	0.11
71	SLV 15	-1628	-17	2876	25.03	-83.14	-0.04
71	SLV 16	-1628	-17	2876	25.03	-83.14	-0.04
72	SLU 1	-32	2	4281	-3.75	1.66	-0.02
72	SLU 2	139	-7	4495	3.05	9.24	0
72	SLU 3	-31	2	4371	-3.91	1.79	-0.02
72	SLU 4	72	-4	4500	0.17	6.33	-0.01
72	SLU 5	139	-7	4556	2.95	9.27	0
72	SLU 6	-31	2	4433	-4	1.82	-0.02
72	SLU 7	72	-3	4561	0.07	6.36	-0.01
72	SLU 8	-33	2	4403	-3.94	1.72	-0.02
72	SLU 9	70	-3	4532	0.14	6.26	-0.01
72	SLU 10	112	-7	5124	2.66	8.58	0
72	SLU 11	-58	2	5000	-4.29	1.13	-0.02
72	SLU 12	45	-3	5129	-0.21	5.68	-0.01
72	SLU 13	111	-7	5185	2.57	8.61	-0.01
72	SLU 14	-58	2	5061	-4.39	1.16	-0.02
72	SLU 15	44	-3	5190	-0.31	5.71	-0.01
72	SLU 16	-60	2	5032	-4.33	1.06	-0.02
72	SLU 17	43	-3	5161	-0.25	5.61	-0.01
72	SLU 18	-71	2	5179	-4.3	0.72	-0.02
72	SLU 19	32	-3	5308	-0.22	5.27	-0.01
72	SLU 20	-71	2	5240	-4.4	0.75	-0.02
72	SLU 21	31	-3	5369	-0.32	5.3	-0.01
72	SLU 22	-43	2	4823	-4.16	1.66	-0.02
72	SLU 23	128	-7	5037	2.64	9.24	0
72	SLU 24	-41	2	4913	-4.32	1.79	-0.02
72	SLU 25	61	-3	5042	-0.24	6.34	-0.01
72	SLU 26	128	-7	5098	2.54	9.27	-0.01
72	SLU 27	-42	2	4974	-4.41	1.82	-0.02
72	SLU 28	61	-3	5103	-0.34	6.37	-0.01
72	SLU 29	-44	2	4945	-4.35	1.72	-0.02
72	SLU 30	59	-3	5073	-0.27	6.27	-0.01
72	SLU 31	101	-6	5666	2.25	8.59	-0.01
72	SLU 32	-69	3	5542	-4.7	1.14	-0.02
72	SLU 33	34	-3	5671	-0.62	5.68	-0.01
72	SLU 34	101	-6	5727	2.16	8.62	-0.01
72	SLU 35	-69	3	5603	-4.8	1.17	-0.02
72	SLU 36	33	-3	5732	-0.72	5.71	-0.01
72	SLU 37	-71	3	5574	-4.74	1.07	-0.02
72	SLU 38	32	-3	5702	-0.66	5.61	-0.01
72	SLU 39	-82	3	5721	-4.71	0.73	-0.02
72	SLU 40	21	-3	5850	-0.63	5.27	-0.01
72	SLU 41	-82	3	5782	-4.81	0.76	-0.02
72	SLU 42	21	-3	5911	-0.73	5.3	-0.01
72	SLU 43	-38	2	5380	-4.73	2.15	-0.02
72	SLU 44	133	-7	5594	2.07	9.73	-0.01
72	SLU 45	-36	2	5470	-4.89	2.28	-0.02
72	SLU 46	66	-3	5599	-0.81	6.83	-0.01
72	SLU 47	133	-7	5655	1.97	9.76	-0.01
72	SLU 48	-37	2	5531	-4.99	2.31	-0.02
72	SLU 49	66	-3	5660	-0.91	6.86	-0.01
72	SLU 50	-38	2	5502	-4.93	2.21	-0.02
72	SLU 51	64	-3	5630	-0.85	6.76	-0.01
72	SLU 52	106	-6	6223	1.68	9.08	-0.01
72	SLU 53	-64	3	6099	-5.27	1.63	-0.03
72	SLU 54	39	-3	6228	-1.2	6.17	-0.02
72	SLU 55	106	-6	6284	1.58	9.11	-0.01
72	SLU 56	-64	3	6160	-5.37	1.66	-0.03
72	SLU 57	39	-3	6289	-1.29	6.2	-0.02
72	SLU 58	-66	3	6131	-5.31	1.56	-0.03
72	SLU 59	37	-3	6259	-1.23	6.11	-0.02
72	SLU 60	-77	3	6278	-5.28	1.22	-0.03
72	SLU 61	26	-3	6407	-1.2	5.77	-0.02
72	SLU 62	-77	3	6339	-5.38	1.25	-0.03
72	SLU 63	26	-3	6468	-1.3	5.8	-0.02
72	SLU 64	-49	2	5921	-5.14	2.16	-0.02
72	SLU 65	122	-6	6136	1.66	9.74	-0.01
72	SLU 66	-47	3	6012	-5.3	2.29	-0.03
72	SLU 67	55	-3	6140	-1.22	6.83	-0.02
72	SLU 68	122	-6	6197	1.56	9.77	-0.01
72	SLU 69	-48	3	6073	-5.4	2.32	-0.03
72	SLU 70	55	-3	6201	-1.32	6.86	-0.02
72	SLU 71	-49	3	6043	-5.34	2.22	-0.03
72	SLU 72	53	-3	6172	-1.26	6.76	-0.02
72	SLU 73	95	-6	6764	1.27	9.08	-0.01
72	SLU 74	-75	3	6641	-5.68	1.63	-0.03
72	SLU 75	28	-2	6769	-1.61	6.18	-0.02
72	SLU 76	95	-6	6826	1.17	9.11	-0.01
72	SLU 77	-75	3	6702	-5.78	1.66	-0.03
72	SLU 78	28	-2	6830	-1.7	6.21	-0.02
72	SLU 79	-77	3	6672	-5.72	1.56	-0.03
72	SLU 80	26	-2	6801	-1.64	6.11	-0.02
72	SLU 81	-88	3	6820	-5.69	1.22	-0.03
72	SLU 82	15	-2	6948	-1.61	5.77	-0.02
72	SLU 83	-88	3	6881	-5.79	1.25	-0.03
72	SLU 84	15	-2	7009	-1.71	5.8	-0.02
72	SLE RA 1	-35	2	4436	-3.86	1.66	-0.02
72	SLE RA 2	79	-4	4579	0.67	6.71	-0.01
72	SLE RA 3	-34	2	4496	-3.97	1.75	-0.02
72	SLE RA 4	34	-2	4582	-1.25	4.78	-0.01

Nodo	Cont.	Reazione a traslazione			Reazione a rotazione		
Ind.	N.br.	x	y	z	x	y	z
72	SLE RA 5	79	-4	4619	0.6	6.73	-0.01
72	SLE RA 6	-34	2	4537	-4.03	1.76	-0.02
72	SLE RA 7	34	-2	4623	-1.32	4.8	-0.01
72	SLE RA 8	-35	2	4517	-3.99	1.7	-0.02
72	SLE RA 9	33	-2	4603	-1.28	4.73	-0.01
72	SLE RA 10	61	-4	4998	0.41	6.27	-0.01
72	SLE RA 11	-52	2	4915	-4.23	1.31	-0.02
72	SLE RA 12	16	-1	5001	-1.51	4.34	-0.01
72	SLE RA 13	61	-4	5039	0.34	6.29	-0.01
72	SLE RA 14	-53	2	4956	-4.29	1.33	-0.02
72	SLE RA 15	16	-1	5042	-1.57	4.36	-0.01
72	SLE RA 16	-54	2	4936	-4.25	1.26	-0.02
72	SLE RA 17	15	-1	5022	-1.53	4.29	-0.01
72	SLE RA 18	-61	2	5035	-4.23	1.04	-0.02
72	SLE RA 19	7	-1	5120	-1.51	4.07	-0.01
72	SLE RA 20	-61	2	5075	-4.3	1.05	-0.02
72	SLE RA 21	7	-1	5161	-1.58	4.09	-0.01
72	SLE FR 1	-35	2	4436	-3.86	1.66	-0.02
72	SLE FR 2	-12	1	4464	-2.96	2.67	-0.02
72	SLE FR 3	-35	2	4452	-3.89	1.67	-0.02
72	SLE FR 4	-20	1	4644	-3.07	2.48	-0.02
72	SLE FR 5	-43	2	4632	-4	1.48	-0.02
72	SLE FR 6	-48	2	4735	-4.05	1.35	-0.02
72	SLE QP 1	-35	2	4436	-3.86	1.66	-0.02
72	SLE QP 2	-43	2	4615	-3.97	1.47	-0.02
72	SLD 1	787	3	5345	-12.23	41.67	-0.05
72	SLD 2	787	3	5345	-12.23	41.67	-0.05
72	SLD 3	666	9	4831	-2.17	36.31	-0.03
72	SLD 4	666	9	4831	-2.17	36.31	-0.03
72	SLD 5	391	-7	5614	-21.71	21.66	-0.06
72	SLD 6	391	-7	5614	-21.71	21.66	-0.06
72	SLD 7	-15	14	3900	11.83	3.79	0.01
72	SLD 8	-15	14	3900	11.83	3.79	0.01
72	SLD 9	-71	-10	5331	-19.77	-0.85	-0.05
72	SLD 10	-71	-10	5331	-19.77	-0.85	-0.05
72	SLD 11	-476	11	3617	13.76	-18.72	0.02
72	SLD 12	-476	11	3617	13.76	-18.72	0.02
72	SLD 13	-751	-6	4400	-5.78	-33.37	-0.01
72	SLD 14	-751	-6	4400	-5.78	-33.37	-0.01
72	SLD 15	-873	1	3886	4.28	-38.73	0.01
72	SLD 16	-873	1	3886	4.28	-38.73	0.01
72	SLV 1	1857	4	6293	-24.57	93.39	-0.09
72	SLV 2	1857	4	6293	-24.57	93.39	-0.09
72	SLV 3	1562	21	5086	0.78	80.41	-0.04
72	SLV 4	1562	21	5086	0.78	80.41	-0.04
72	SLV 5	975	-22	6949	-48.6	48.73	-0.12
72	SLV 6	975	-22	6949	-48.6	48.73	-0.12
72	SLV 7	-9	32	2926	35.9	5.47	0.05
72	SLV 8	-9	32	2926	35.9	5.47	0.05
72	SLV 9	-77	-28	6305	-43.84	-2.52	-0.09
72	SLV 10	-77	-28	6305	-43.84	-2.52	-0.09
72	SLV 11	-1060	26	2282	40.65	-45.79	0.08
72	SLV 12	-1060	26	2282	40.65	-45.79	0.08
72	SLV 13	-1647	-17	4145	-8.72	-77.47	0
72	SLV 14	-1647	-17	4145	-8.72	-77.47	0
72	SLV 15	-1942	0	2938	16.63	-90.45	0.05
72	SLV 16	-1942	0	2938	16.63	-90.45	0.05
73	SLU 1	-16	-2	3976	-2.04	-0.52	-0.01
73	SLU 2	152	-9	4278	2.86	6.51	0
73	SLU 3	-14	-2	4061	-2.13	-0.44	-0.01
73	SLU 4	87	-6	4242	0.81	3.78	-0.01
73	SLU 5	152	-9	4335	2.8	6.51	0
73	SLU 6	-14	-2	4118	-2.18	-0.44	-0.01
73	SLU 7	87	-6	4298	0.75	3.78	-0.01
73	SLU 8	-16	-2	4090	-2.15	-0.53	-0.01
73	SLU 9	85	-6	4271	0.79	3.69	-0.01
73	SLU 10	129	-9	4842	2.62	5.61	0
73	SLU 11	-36	-2	4625	-2.36	-1.34	-0.01
73	SLU 12	64	-6	4806	0.58	2.88	-0.01
73	SLU 13	129	-9	4899	2.57	5.61	0
73	SLU 14	-36	-2	4682	-2.41	-1.34	-0.01
73	SLU 15	64	-6	4863	0.52	2.88	-0.01
73	SLU 16	-38	-2	4654	-2.38	-1.43	-0.01
73	SLU 17	62	-6	4835	0.56	2.79	-0.01
73	SLU 18	-48	-2	4782	-2.37	-1.81	-0.01
73	SLU 19	53	-6	4963	0.57	2.41	-0.01
73	SLU 20	-48	-2	4839	-2.42	-1.81	-0.01
73	SLU 21	53	-6	5020	0.51	2.41	-0.01
73	SLU 22	-22	-2	4466	-2.28	-0.73	-0.01
73	SLU 23	146	-9	4767	2.61	6.31	0
73	SLU 24	-20	-2	4550	-2.37	-0.64	-0.01
73	SLU 25	80	-6	4731	0.57	3.58	-0.01
73	SLU 26	146	-9	4824	2.56	6.31	0
73	SLU 27	-20	-2	4607	-2.43	-0.64	-0.01
73	SLU 28	80	-6	4788	0.51	3.58	-0.01
73	SLU 29	-22	-2	4579	-2.39	-0.73	-0.01
73	SLU 30	79	-6	4760	0.54	3.49	-0.01
73	SLU 31	123	-9	5332	2.38	5.41	-0.01
73	SLU 32	-43	-2	5115	-2.6	-1.54	-0.01
73	SLU 33	58	-7	5295	0.33	2.68	-0.01
73	SLU 34	123	-9	5388	2.33	5.41	-0.01

Nodo	Cont.	Reazione a traslazione			Reazione a rotazione		
Ind.	N.br.	x	y	z	x	y	z
73	SLU 35	-43	-2	5171	-2.66	-1.54	-0.01
73	SLU 36	58	-7	5352	0.28	2.68	-0.01
73	SLU 37	-45	-2	5144	-2.62	-1.63	-0.01
73	SLU 38	56	-7	5325	0.31	2.59	-0.01
73	SLU 39	-54	-2	5272	-2.61	-2.01	-0.01
73	SLU 40	46	-6	5453	0.33	2.21	-0.01
73	SLU 41	-54	-2	5329	-2.67	-2.01	-0.02
73	SLU 42	47	-7	5510	0.27	2.21	-0.01
73	SLU 43	-19	-3	5001	-2.57	-0.61	-0.01
73	SLU 44	149	-10	5303	2.33	6.43	0
73	SLU 45	-17	-3	5086	-2.65	-0.52	-0.01
73	SLU 46	84	-7	5267	0.28	3.7	-0.01
73	SLU 47	149	-10	5360	2.27	6.42	0
73	SLU 48	-17	-3	5143	-2.71	-0.53	-0.01
73	SLU 49	84	-7	5323	0.23	3.69	-0.01
73	SLU 50	-19	-3	5115	-2.68	-0.61	-0.01
73	SLU 51	82	-7	5296	0.26	3.61	-0.01
73	SLU 52	127	-10	5867	2.1	5.53	-0.01
73	SLU 53	-39	-3	5650	-2.89	-1.42	-0.02
73	SLU 54	62	-7	5831	0.05	2.8	-0.01
73	SLU 55	127	-10	5924	2.04	5.52	-0.01
73	SLU 56	-39	-3	5707	-2.94	-1.43	-0.02
73	SLU 57	62	-7	5888	0	2.79	-0.01
73	SLU 58	-41	-3	5679	-2.91	-1.51	-0.02
73	SLU 59	60	-7	5860	0.03	2.71	-0.01
73	SLU 60	-51	-3	5807	-2.89	-1.89	-0.02
73	SLU 61	50	-7	5988	0.04	2.33	-0.01
73	SLU 62	-51	-3	5864	-2.95	-1.9	-0.02
73	SLU 63	50	-7	6045	-0.01	2.33	-0.01
73	SLU 64	-25	-3	5491	-2.81	-0.81	-0.02
73	SLU 65	143	-10	5792	2.08	6.22	-0.01
73	SLU 66	-23	-3	5575	-2.9	-0.73	-0.02
73	SLU 67	78	-7	5756	0.04	3.49	-0.01
73	SLU 68	143	-10	5849	2.03	6.22	-0.01
73	SLU 69	-23	-3	5632	-2.95	-0.73	-0.02
73	SLU 70	78	-7	5813	-0.02	3.49	-0.01
73	SLU 71	-25	-3	5604	-2.92	-0.82	-0.02
73	SLU 72	76	-7	5785	0.02	3.4	-0.01
73	SLU 73	121	-10	6357	1.85	5.32	-0.01
73	SLU 74	-45	-3	6140	-3.13	-1.63	-0.02
73	SLU 75	55	-7	6320	-0.19	2.59	-0.01
73	SLU 76	121	-10	6413	1.8	5.32	-0.01
73	SLU 77	-45	-3	6196	-3.18	-1.63	-0.02
73	SLU 78	55	-7	6377	-0.25	2.59	-0.01
73	SLU 79	-47	-3	6169	-3.15	-1.72	-0.02
73	SLU 80	53	-7	6350	-0.21	2.5	-0.01
73	SLU 81	-57	-3	6297	-3.14	-2.1	-0.02
73	SLU 82	44	-7	6478	-0.2	2.12	-0.01
73	SLU 83	-57	-3	6354	-3.19	-2.1	-0.02
73	SLU 84	44	-7	6535	-0.26	2.12	-0.01
73	SLE RA 1	-18	-2	4116	-2.11	-0.58	-0.01
73	SLE RA 2	94	-7	4317	1.15	4.11	-0.01
73	SLE RA 3	-16	-2	4172	-2.17	-0.52	-0.01
73	SLE RA 4	51	-5	4293	-0.21	2.29	-0.01
73	SLE RA 5	94	-7	4355	1.12	4.11	-0.01
73	SLE RA 6	-16	-2	4210	-2.2	-0.53	-0.01
73	SLE RA 7	51	-5	4331	-0.25	2.29	-0.01
73	SLE RA 8	-18	-2	4192	-2.18	-0.58	-0.01
73	SLE RA 9	49	-5	4312	-0.22	2.23	-0.01
73	SLE RA 10	79	-7	4693	1	3.51	-0.01
73	SLE RA 11	-31	-2	4549	-2.32	-1.12	-0.01
73	SLE RA 12	36	-5	4669	-0.36	1.69	-0.01
73	SLE RA 13	79	-7	4731	0.96	3.51	-0.01
73	SLE RA 14	-31	-2	4587	-2.36	-1.12	-0.01
73	SLE RA 15	36	-5	4707	-0.4	1.69	-0.01
73	SLE RA 16	-33	-2	4568	-2.33	-1.18	-0.01
73	SLE RA 17	34	-5	4689	-0.38	1.63	-0.01
73	SLE RA 18	-39	-2	4654	-2.33	-1.44	-0.01
73	SLE RA 19	28	-5	4774	-0.37	1.38	-0.01
73	SLE RA 20	-39	-2	4691	-2.36	-1.44	-0.01
73	SLE RA 21	28	-5	4812	-0.41	1.38	-0.01
73	SLE FR 1	-18	-2	4116	-2.11	-0.58	-0.01
73	SLE FR 2	5	-3	4156	-1.45	0.36	-0.01
73	SLE FR 3	-18	-2	4131	-2.12	-0.58	-0.01
73	SLE FR 4	-2	-3	4318	-1.52	0.1	-0.01
73	SLE FR 5	-24	-2	4293	-2.19	-0.84	-0.01
73	SLE FR 6	-28	-2	4385	-2.22	-1.01	-0.01
73	SLE QP 1	-18	-2	4116	-2.11	-0.58	-0.01
73	SLE QP 2	-24	-2	4277	-2.17	-0.84	-0.01
73	SLD 1	862	-1	4883	-7.47	40.18	-0.03
73	SLD 2	862	-1	4883	-7.47	40.18	-0.03
73	SLD 3	744	6	4304	-1.52	35.56	-0.02
73	SLD 4	744	6	4304	-1.52	35.56	-0.02
73	SLD 5	421	-13	5337	-12.78	18.47	-0.03
73	SLD 6	421	-13	5337	-12.78	18.47	-0.03
73	SLD 7	27	11	3407	7.04	3.08	0
73	SLD 8	27	11	3407	7.04	3.08	0
73	SLD 9	-75	-16	5148	-11.38	-4.75	-0.02
73	SLD 10	-75	-16	5148	-11.38	-4.75	-0.02
73	SLD 11	-470	9	3217	8.43	-20.15	0.01
73	SLD 12	-470	9	3217	8.43	-20.15	0.01

Nodo	Cont.	Reazione a traslazione			Reazione a rotazione		
Ind.	N.br.	x	y	z	x	y	z
73	SLD 13	-792	-10	4251	-2.82	-37.23	0
73	SLD 14	-792	-10	4251	-2.82	-37.23	0
73	SLD 15	-910	-3	3672	3.12	-41.85	0.01
73	SLD 16	-910	-3	3672	3.12	-41.85	0.01
73	SLV 1	2001	0	5687	-15.3	92.86	-0.06
73	SLV 2	2001	0	5687	-15.3	92.86	-0.06
73	SLV 3	1716	18	4320	-0.34	81.72	-0.03
73	SLV 4	1716	18	4320	-0.34	81.72	-0.03
73	SLV 5	1016	-30	6774	-28.81	44.18	-0.06
73	SLV 6	1016	-30	6774	-28.81	44.18	-0.06
73	SLV 7	66	32	2216	21.08	7.03	0.02
73	SLV 8	66	32	2216	21.08	7.03	0.02
73	SLV 9	-114	-36	6339	-25.42	-8.7	-0.04
73	SLV 10	-114	-36	6339	-25.42	-8.7	-0.04
73	SLV 11	-1064	25	1780	24.46	-45.85	0.04
73	SLV 12	-1064	25	1780	24.46	-45.85	0.04
73	SLV 13	-1765	-22	4235	-4.01	-83.39	0.01
73	SLV 14	-1765	-22	4235	-4.01	-83.39	0.01
73	SLV 15	-2050	-4	2868	10.95	-94.53	0.03
73	SLV 16	-2050	-4	2868	10.95	-94.53	0.03
74	SLU 1	74	1	3844	-1.68	4.88	0.02
74	SLU 2	242	-1	4248	0.55	12.23	0.02
74	SLU 3	78	1	3927	-1.74	5.1	0.02
74	SLU 4	179	0	4170	-0.41	9.51	0.02
74	SLU 5	243	-1	4303	0.51	12.31	0.02
74	SLU 6	80	1	3983	-1.78	5.19	0.02
74	SLU 7	180	0	4225	-0.44	9.6	0.02
74	SLU 8	77	1	3955	-1.76	5.06	0.02
74	SLU 9	178	0	4198	-0.42	9.46	0.02
74	SLU 10	237	-1	4774	0.35	12.32	0.02
74	SLU 11	73	1	4454	-1.94	5.2	0.02
74	SLU 12	174	0	4696	-0.6	9.61	0.02
74	SLU 13	239	-1	4829	0.31	12.41	0.02
74	SLU 14	75	1	4509	-1.98	5.29	0.02
74	SLU 15	176	0	4751	-0.64	9.69	0.02
74	SLU 16	72	1	4482	-1.96	5.16	0.02
74	SLU 17	173	0	4724	-0.62	9.56	0.02
74	SLU 18	67	2	4596	-1.96	5.02	0.02
74	SLU 19	168	0	4838	-0.63	9.43	0.02
74	SLU 20	69	2	4651	-2	5.11	0.02
74	SLU 21	169	0	4894	-0.67	9.51	0.02
74	SLU 22	83	1	4306	-1.88	5.55	0.02
74	SLU 23	251	-1	4710	0.35	12.89	0.02
74	SLU 24	87	1	4389	-1.94	5.77	0.02
74	SLU 25	188	0	4631	-0.6	10.17	0.02
74	SLU 26	252	-1	4765	0.31	12.98	0.02
74	SLU 27	88	1	4445	-1.98	5.85	0.02
74	SLU 28	189	0	4687	-0.64	10.26	0.02
74	SLU 29	86	1	4417	-1.96	5.72	0.02
74	SLU 30	187	0	4659	-0.62	10.13	0.02
74	SLU 31	246	-1	5236	0.15	12.98	0.02
74	SLU 32	82	2	4915	-2.14	5.86	0.02
74	SLU 33	183	0	5158	-0.8	10.27	0.02
74	SLU 34	247	-1	5291	0.11	13.07	0.02
74	SLU 35	84	2	4971	-2.18	5.95	0.02
74	SLU 36	184	0	5213	-0.84	10.36	0.02
74	SLU 37	81	2	4943	-2.16	5.82	0.02
74	SLU 38	182	0	5186	-0.82	10.22	0.02
74	SLU 39	76	2	5058	-2.16	5.69	0.02
74	SLU 40	177	0	5300	-0.83	10.09	0.02
74	SLU 41	77	2	5113	-2.2	5.77	0.02
74	SLU 42	178	0	5355	-0.86	10.18	0.02
74	SLU 43	93	2	4839	-2.12	6.12	0.02
74	SLU 44	261	-1	5243	0.11	13.46	0.02
74	SLU 45	97	2	4922	-2.18	6.34	0.02
74	SLU 46	198	0	5164	-0.84	10.75	0.02
74	SLU 47	263	-1	5298	0.07	13.55	0.02
74	SLU 48	99	2	4978	-2.22	6.43	0.02
74	SLU 49	200	0	5220	-0.88	10.83	0.02
74	SLU 50	96	2	4950	-2.19	6.3	0.02
74	SLU 51	197	0	5192	-0.86	10.7	0.02
74	SLU 52	256	-1	5769	-0.09	13.56	0.03
74	SLU 53	93	2	5448	-2.38	6.44	0.02
74	SLU 54	193	0	5691	-1.04	10.84	0.03
74	SLU 55	258	-1	5824	-0.13	13.65	0.03
74	SLU 56	94	2	5504	-2.41	6.53	0.02
74	SLU 57	195	0	5746	-1.08	10.93	0.03
74	SLU 58	91	2	5476	-2.39	6.4	0.02
74	SLU 59	192	0	5719	-1.05	10.8	0.03
74	SLU 60	86	2	5591	-2.4	6.26	0.02
74	SLU 61	187	0	5833	-1.06	10.67	0.03
74	SLU 62	88	2	5646	-2.44	6.35	0.02
74	SLU 63	188	0	5888	-1.1	10.75	0.03
74	SLU 64	102	2	5301	-2.32	6.79	0.02
74	SLU 65	270	-1	5705	-0.09	14.13	0.03
74	SLU 66	106	2	5384	-2.38	7.01	0.02
74	SLU 67	207	0	5626	-1.04	11.41	0.03
74	SLU 68	271	-1	5760	-0.13	14.21	0.03
74	SLU 69	108	2	5440	-2.42	7.09	0.02
74	SLU 70	208	0	5682	-1.08	11.5	0.03
74	SLU 71	105	2	5412	-2.39	6.96	0.02

Nodo	Cont.	Reazione a traslazione			Reazione a rotazione		
Ind.	N.br.	x	y	z	x	y	z
74	SLU 72	206	0	5654	-1.06	11.36	0.03
74	SLU 73	265	-1	6231	-0.29	14.22	0.03
74	SLU 74	101	2	5910	-2.58	7.1	0.03
74	SLU 75	202	1	6152	-1.24	11.51	0.03
74	SLU 76	266	0	6286	-0.33	14.31	0.03
74	SLU 77	103	2	5966	-2.61	7.19	0.03
74	SLU 78	204	1	6208	-1.28	11.59	0.03
74	SLU 79	100	2	5938	-2.59	7.06	0.03
74	SLU 80	201	1	6180	-1.25	11.46	0.03
74	SLU 81	95	2	6053	-2.6	6.92	0.03
74	SLU 82	196	1	6295	-1.26	11.33	0.03
74	SLU 83	96	2	6108	-2.64	7.01	0.03
74	SLU 84	197	1	6350	-1.3	11.42	0.03
74	SLE RA 1	77	1	3976	-1.74	5.07	0.02
74	SLE RA 2	188	0	4245	-0.25	9.97	0.02
74	SLE RA 3	79	1	4032	-1.78	5.22	0.02
74	SLE RA 4	147	0	4193	-0.89	8.16	0.02
74	SLE RA 5	189	0	4282	-0.28	10.03	0.02
74	SLE RA 6	80	1	4069	-1.8	5.28	0.02
74	SLE RA 7	148	0	4230	-0.91	8.22	0.02
74	SLE RA 8	79	1	4050	-1.79	5.19	0.02
74	SLE RA 9	146	0	4212	-0.9	8.13	0.02
74	SLE RA 10	185	0	4596	-0.39	10.03	0.02
74	SLE RA 11	76	1	4382	-1.91	5.29	0.02
74	SLE RA 12	143	0	4544	-1.02	8.22	0.02
74	SLE RA 13	186	0	4633	-0.41	10.09	0.02
74	SLE RA 14	77	1	4420	-1.94	5.34	0.02
74	SLE RA 15	144	0	4581	-1.04	8.28	0.02
74	SLE RA 16	75	1	4401	-1.92	5.26	0.02
74	SLE RA 17	142	0	4563	-1.03	8.19	0.02
74	SLE RA 18	72	2	4477	-1.93	5.17	0.02
74	SLE RA 19	139	1	4639	-1.04	8.1	0.02
74	SLE RA 20	73	2	4514	-1.95	5.22	0.02
74	SLE RA 21	140	1	4676	-1.06	8.16	0.02
74	SLE FR 1	77	1	3976	-1.74	5.07	0.02
74	SLE FR 2	99	1	4030	-1.44	6.05	0.02
74	SLE FR 3	77	1	3991	-1.75	5.1	0.02
74	SLE FR 4	98	1	4180	-1.5	6.08	0.02
74	SLE FR 5	76	1	4141	-1.81	5.12	0.02
74	SLE FR 6	74	1	4227	-1.83	5.12	0.02
74	SLE QP 1	77	1	3976	-1.74	5.07	0.02
74	SLE QP 2	75	1	4127	-1.8	5.1	0.02
74	SLD 1	1006	8	4735	-4.75	49.13	0.02
74	SLD 2	1006	8	4735	-4.75	49.13	0.02
74	SLD 3	882	3	4029	-1.72	44.02	0.01
74	SLD 4	882	3	4029	-1.72	44.02	0.01
74	SLD 5	543	11	5380	-7.28	26.06	0.03
74	SLD 6	543	11	5380	-7.28	26.06	0.03
74	SLD 7	129	-6	3027	2.82	9.03	0.01
74	SLD 8	129	-6	3027	2.82	9.03	0.01
74	SLD 9	21	9	5227	-6.41	1.17	0.03
74	SLD 10	21	9	5227	-6.41	1.17	0.03
74	SLD 11	-392	-9	2874	3.69	-15.86	0.01
74	SLD 12	-392	-9	2874	3.69	-15.86	0.01
74	SLD 13	-732	0	4224	-1.87	-33.82	0.02
74	SLD 14	-732	0	4224	-1.87	-33.82	0.02
74	SLD 15	-856	-5	3518	1.16	-38.93	0.02
74	SLD 16	-856	-5	3518	1.16	-38.93	0.02
74	SLV 1	2201	18	5563	-9.05	105.61	0.02
74	SLV 2	2201	18	5563	-9.05	105.61	0.02
74	SLV 3	1905	4	3891	-1.5	93.38	0
74	SLV 4	1905	4	3891	-1.5	93.38	0
74	SLV 5	1162	26	7094	-15.42	53.8	0.04
74	SLV 6	1162	26	7094	-15.42	53.8	0.04
74	SLV 7	175	-18	1519	9.74	13.04	-0.01
74	SLV 8	175	-18	1519	9.74	13.04	-0.01
74	SLV 9	-25	21	6734	-13.33	-2.84	0.05
74	SLV 10	-25	21	6734	-13.33	-2.84	0.05
74	SLV 11	-1011	-24	1159	11.83	-43.59	-0.01
74	SLV 12	-1011	-24	1159	11.83	-43.59	-0.01
74	SLV 13	-1755	-1	4363	-2.09	-83.18	0.03
74	SLV 14	-1755	-1	4363	-2.09	-83.18	0.03
74	SLV 15	-2050	-15	2690	5.46	-95.41	0.02
74	SLV 16	-2050	-15	2690	5.46	-95.41	0.02
75	SLU 1	40	554	6139	-16.81	1.12	0
75	SLU 2	178	703	6955	-23.49	7.04	-0.01
75	SLU 3	43	569	6276	-17.28	1.22	0
75	SLU 4	125	658	6766	-21.28	4.77	0
75	SLU 5	178	713	7047	-23.8	7.04	-0.01
75	SLU 6	43	578	6367	-17.59	1.22	0
75	SLU 7	126	667	6857	-21.59	4.77	0
75	SLU 8	41	573	6321	-17.43	1.13	0
75	SLU 9	123	663	6811	-21.44	4.68	0
75	SLU 10	177	769	7767	-25.32	6.9	-0.01
75	SLU 11	42	634	7087	-19.11	1.08	0
75	SLU 12	125	724	7577	-23.11	4.63	0
75	SLU 13	177	778	7858	-25.63	6.9	-0.01
75	SLU 14	42	644	7179	-19.42	1.08	0
75	SLU 15	125	733	7669	-23.42	4.63	0
75	SLU 16	40	639	7132	-19.27	0.98	0
75	SLU 17	123	728	7622	-23.27	4.53	0

Nodo	Cont.	Reazione a traslazione			Reazione a rotazione		
Ind.	N.br.	x	y	z	x	y	z
75	SLU 18	39	648	7298	-19.43	0.92	0
75	SLU 19	122	737	7788	-23.43	4.47	0
75	SLU 20	39	658	7389	-19.74	0.92	0
75	SLU 21	122	747	7879	-23.74	4.47	0
75	SLU 22	51	617	6864	-18.63	1.5	0
75	SLU 23	188	766	7680	-25.3	7.41	-0.01
75	SLU 24	54	631	7001	-19.09	1.6	0
75	SLU 25	136	721	7491	-23.09	5.15	-0.01
75	SLU 26	189	775	7772	-25.61	7.42	-0.01
75	SLU 27	54	641	7092	-19.4	1.6	0
75	SLU 28	136	730	7582	-23.4	5.15	-0.01
75	SLU 29	52	636	7046	-19.25	1.5	0
75	SLU 30	134	726	7536	-23.25	5.05	-0.01
75	SLU 31	188	832	8492	-27.13	7.27	-0.01
75	SLU 32	53	697	7812	-20.92	1.45	0
75	SLU 33	135	787	8302	-24.93	5	-0.01
75	SLU 34	188	841	8583	-27.44	7.27	-0.01
75	SLU 35	53	707	7904	-21.23	1.45	0
75	SLU 36	136	796	8394	-25.24	5	-0.01
75	SLU 37	51	702	7857	-21.08	1.36	0
75	SLU 38	133	791	8347	-25.08	4.91	-0.01
75	SLU 39	50	711	8023	-21.25	1.29	0
75	SLU 40	132	800	8513	-25.25	4.84	-0.01
75	SLU 41	50	721	8114	-21.56	1.3	0
75	SLU 42	133	810	8604	-25.56	4.84	-0.01
75	SLU 43	49	699	7732	-21.24	1.33	0
75	SLU 44	186	848	8548	-27.91	7.25	-0.01
75	SLU 45	51	713	7869	-21.7	1.43	0
75	SLU 46	134	802	8359	-25.7	4.98	0
75	SLU 47	186	857	8640	-28.22	7.25	-0.01
75	SLU 48	52	723	7960	-22.01	1.43	0
75	SLU 49	134	812	8450	-26.01	4.98	0
75	SLU 50	49	718	7914	-21.86	1.34	0
75	SLU 51	132	807	8404	-25.86	4.88	0
75	SLU 52	185	913	9360	-29.74	7.1	-0.01
75	SLU 53	51	779	8680	-23.53	1.29	0
75	SLU 54	133	868	9170	-27.53	4.84	0
75	SLU 55	186	923	9451	-30.05	7.11	-0.01
75	SLU 56	51	789	8772	-23.84	1.29	0
75	SLU 57	133	878	9262	-27.84	4.84	0
75	SLU 58	49	784	8725	-23.69	1.19	0
75	SLU 59	131	873	9215	-27.69	4.74	0
75	SLU 60	48	793	8891	-23.85	1.13	0
75	SLU 61	130	882	9381	-27.86	4.68	0
75	SLU 62	48	802	8982	-24.16	1.13	0
75	SLU 63	130	892	9472	-28.17	4.68	0
75	SLU 64	59	762	8457	-23.05	1.71	0
75	SLU 65	197	910	9273	-29.72	7.62	-0.01
75	SLU 66	62	776	8594	-23.51	1.81	0
75	SLU 67	144	865	9084	-27.52	5.35	-0.01
75	SLU 68	197	920	9365	-30.03	7.62	-0.01
75	SLU 69	62	786	8685	-23.82	1.81	0
75	SLU 70	145	875	9175	-27.83	5.36	-0.01
75	SLU 71	60	781	8639	-23.67	1.71	0
75	SLU 72	142	870	9129	-27.67	5.26	-0.01
75	SLU 73	196	976	10085	-31.56	7.48	-0.01
75	SLU 74	61	842	9405	-25.35	1.66	0
75	SLU 75	144	931	9895	-29.35	5.21	-0.01
75	SLU 76	196	986	10176	-31.86	7.48	-0.01
75	SLU 77	62	852	9497	-25.66	1.66	0
75	SLU 78	144	941	9987	-29.66	5.21	-0.01
75	SLU 79	59	847	9450	-25.5	1.57	0
75	SLU 80	142	936	9940	-29.51	5.12	-0.01
75	SLU 81	58	856	9616	-25.67	1.5	0
75	SLU 82	141	945	10106	-29.67	5.05	-0.01
75	SLU 83	59	865	9707	-25.98	1.5	0
75	SLU 84	141	955	10197	-29.98	5.05	-0.01
75	SLE RA 1	43	572	6346	-17.33	1.23	0
75	SLE RA 2	135	671	6890	-21.78	5.17	-0.01
75	SLE RA 3	45	582	6438	-17.64	1.3	0
75	SLE RA 4	100	641	6764	-20.31	3.66	0
75	SLE RA 5	135	678	6951	-21.99	5.18	-0.01
75	SLE RA 6	45	588	6498	-17.85	1.3	0
75	SLE RA 7	100	648	6825	-20.52	3.66	0
75	SLE RA 8	44	585	6468	-17.75	1.23	0
75	SLE RA 9	99	644	6794	-20.41	3.6	0
75	SLE RA 10	134	715	7431	-23	5.08	-0.01
75	SLE RA 11	45	626	6978	-18.86	1.2	0
75	SLE RA 12	100	685	7305	-21.53	3.57	0
75	SLE RA 13	135	722	7492	-23.21	5.08	-0.01
75	SLE RA 14	45	632	7039	-19.07	1.2	0
75	SLE RA 15	100	692	7366	-21.74	3.57	0
75	SLE RA 16	43	629	7008	-18.97	1.14	0
75	SLE RA 17	98	688	7335	-21.64	3.5	0
75	SLE RA 18	43	635	7119	-19.08	1.09	0
75	SLE RA 19	98	694	7445	-21.75	3.46	0
75	SLE RA 20	43	641	7179	-19.29	1.1	0
75	SLE RA 21	98	701	7506	-21.95	3.46	0
75	SLE FR 1	43	572	6346	-17.33	1.23	0
75	SLE FR 2	62	592	6455	-18.22	2.02	0
75	SLE FR 3	43	575	6370	-17.42	1.23	0

Nodo	Cont.	Reazione a traslazione			Reazione a rotazione		
Ind.	N.br.	x	y	z	x	y	z
75	SLE FR 4	61	611	6687	-18.75	1.98	0
75	SLE FR 5	43	593	6602	-17.94	1.19	0
75	SLE FR 6	43	603	6732	-18.21	1.16	0
75	SLE QP 1	43	572	6346	-17.33	1.23	0
75	SLE QP 2	43	591	6578	-17.86	1.19	0
75	SLD 1	1076	851	7695	-29.25	47.95	-0.07
75	SLD 2	1076	851	7695	-29.25	47.95	-0.07
75	SLD 3	1010	551	6298	-16.35	44.89	-0.07
75	SLD 4	1010	551	6298	-16.35	44.89	-0.07
75	SLD 5	453	1123	9033	-40.85	19.85	-0.01
75	SLD 6	453	1123	9033	-40.85	19.85	-0.01
75	SLD 7	233	125	4374	2.16	9.67	-0.03
75	SLD 8	233	125	4374	2.16	9.67	-0.03
75	SLD 9	-147	1057	8781	-37.88	-7.29	0.03
75	SLD 10	-147	1057	8781	-37.88	-7.29	0.03
75	SLD 11	-367	58	4123	5.13	-17.47	0.01
75	SLD 12	-367	58	4123	5.13	-17.47	0.01
75	SLD 13	-924	630	6858	-19.36	-42.51	0.07
75	SLD 14	-924	630	6858	-19.36	-42.51	0.07
75	SLD 15	-990	331	5460	-6.46	-45.57	0.07
75	SLD 16	-990	331	5460	-6.46	-45.57	0.07
75	SLV 1	2402	1214	9246	-45.15	107.91	-0.15
75	SLV 2	2402	1214	9246	-45.15	107.91	-0.15
75	SLV 3	2237	511	5934	-14.89	100.4	-0.17
75	SLV 4	2237	511	5934	-14.89	100.4	-0.17
75	SLV 5	1000	1845	12401	-71.94	44.59	-0.03
75	SLV 6	1000	1845	12401	-71.94	44.59	-0.03
75	SLV 7	452	-500	1361	28.93	19.57	-0.07
75	SLV 8	452	-500	1361	28.93	19.57	-0.07
75	SLV 9	-366	1682	11794	-64.64	-17.19	0.07
75	SLV 10	-366	1682	11794	-64.64	-17.19	0.07
75	SLV 11	-914	-663	754	36.23	-42.21	0.02
75	SLV 12	-914	-663	754	36.23	-42.21	0.02
75	SLV 13	-2151	671	7222	-20.82	-98.02	0.16
75	SLV 14	-2151	671	7222	-20.82	-98.02	0.16
75	SLV 15	-2316	-33	3910	9.44	-105.53	0.15
75	SLV 16	-2316	-33	3910	9.44	-105.53	0.15
76	SLU 1	31	5	4825	-4.27	4.27	-0.03
76	SLU 2	128	6	5434	-10.05	8.74	-0.04
76	SLU 3	33	5	4931	-4.36	4.42	-0.03
76	SLU 4	91	5	5297	-7.83	7.1	-0.04
76	SLU 5	127	6	5504	-10.12	8.78	-0.04
76	SLU 6	33	5	5001	-4.43	4.46	-0.03
76	SLU 7	90	6	5367	-7.9	7.14	-0.04
76	SLU 8	31	5	4965	-4.4	4.35	-0.03
76	SLU 9	88	5	5331	-7.87	7.03	-0.04
76	SLU 10	135	6	6078	-10.54	9.48	-0.05
76	SLU 11	41	6	5575	-4.86	5.15	-0.03
76	SLU 12	99	6	5941	-8.33	7.84	-0.04
76	SLU 13	135	6	6148	-10.61	9.51	-0.05
76	SLU 14	41	6	5645	-4.92	5.19	-0.03
76	SLU 15	98	6	6011	-8.39	7.88	-0.04
76	SLU 16	39	6	5609	-4.9	5.08	-0.03
76	SLU 17	96	6	5975	-8.36	7.76	-0.04
76	SLU 18	43	6	5745	-4.97	5.32	-0.03
76	SLU 19	100	6	6110	-8.44	8	-0.04
76	SLU 20	42	6	5815	-5.04	5.35	-0.03
76	SLU 21	100	6	6181	-8.51	8.04	-0.04
76	SLU 22	47	6	5398	-4.73	5.32	-0.03
76	SLU 23	143	6	6006	-10.51	9.79	-0.05
76	SLU 24	49	6	5504	-4.82	5.47	-0.03
76	SLU 25	107	6	5869	-8.29	8.15	-0.04
76	SLU 26	143	6	6077	-10.58	9.83	-0.05
76	SLU 27	49	6	5574	-4.89	5.51	-0.03
76	SLU 28	106	6	5939	-8.36	8.19	-0.04
76	SLU 29	47	6	5538	-4.86	5.39	-0.03
76	SLU 30	104	6	5903	-8.33	8.08	-0.04
76	SLU 31	151	7	6651	-11	10.52	-0.05
76	SLU 32	57	6	6148	-5.32	6.2	-0.03
76	SLU 33	115	7	6513	-8.79	8.89	-0.04
76	SLU 34	151	7	6721	-11.07	10.56	-0.05
76	SLU 35	57	7	6218	-5.39	6.24	-0.03
76	SLU 36	114	7	6583	-8.85	8.92	-0.04
76	SLU 37	55	7	6182	-5.36	6.13	-0.03
76	SLU 38	112	7	6547	-8.83	8.81	-0.04
76	SLU 39	59	7	6318	-5.43	6.37	-0.03
76	SLU 40	116	7	6683	-8.9	9.05	-0.04
76	SLU 41	58	7	6388	-5.5	6.4	-0.03
76	SLU 42	116	7	6753	-8.97	9.09	-0.04
76	SLU 43	35	6	6076	-5.39	5.19	-0.03
76	SLU 44	132	7	6685	-11.17	9.66	-0.05
76	SLU 45	37	6	6182	-5.49	5.34	-0.03
76	SLU 46	95	7	6548	-8.95	8.03	-0.04
76	SLU 47	131	7	6755	-11.24	9.7	-0.05
76	SLU 48	37	6	6253	-5.55	5.38	-0.03
76	SLU 49	94	7	6618	-9.02	8.06	-0.04
76	SLU 50	35	6	6216	-5.52	5.27	-0.03
76	SLU 51	92	7	6582	-8.99	7.95	-0.04
76	SLU 52	139	8	7329	-11.66	10.4	-0.05
76	SLU 53	45	7	6827	-5.98	6.08	-0.04
76	SLU 54	103	7	7192	-9.45	8.76	-0.05

Nodo	Cont.	Reazione a traslazione			Reazione a rotazione		
Ind.	N.br.	x	y	z	x	y	z
76	SLU 55	139	8	7399	-11.73	10.43	-0.05
76	SLU 56	45	7	6897	-6.05	6.11	-0.04
76	SLU 57	102	8	7262	-9.52	8.8	-0.05
76	SLU 58	43	7	6861	-6.02	6	-0.04
76	SLU 59	100	7	7226	-9.49	8.68	-0.05
76	SLU 60	47	7	6996	-6.09	6.24	-0.04
76	SLU 61	104	8	7362	-9.56	8.92	-0.05
76	SLU 62	46	7	7066	-6.16	6.28	-0.04
76	SLU 63	104	8	7432	-9.63	8.96	-0.05
76	SLU 64	51	7	6649	-5.85	6.24	-0.04
76	SLU 65	147	8	7258	-11.63	10.71	-0.05
76	SLU 66	53	7	6755	-5.95	6.39	-0.04
76	SLU 67	111	7	7120	-9.42	9.07	-0.05
76	SLU 68	147	8	7328	-11.7	10.75	-0.05
76	SLU 69	53	7	6825	-6.01	6.43	-0.04
76	SLU 70	110	7	7190	-9.48	9.11	-0.05
76	SLU 71	51	7	6789	-5.99	6.32	-0.04
76	SLU 72	108	7	7154	-9.45	9	-0.05
76	SLU 73	155	8	7902	-12.12	11.45	-0.06
76	SLU 74	61	8	7399	-6.44	7.12	-0.04
76	SLU 75	119	8	7764	-9.91	9.81	-0.05
76	SLU 76	155	8	7972	-12.19	11.48	-0.06
76	SLU 77	61	8	7469	-6.51	7.16	-0.04
76	SLU 78	118	8	7835	-9.98	9.85	-0.05
76	SLU 79	59	8	7433	-6.48	7.05	-0.04
76	SLU 80	116	8	7798	-9.95	9.73	-0.05
76	SLU 81	63	8	7569	-6.55	7.29	-0.04
76	SLU 82	120	8	7934	-10.02	9.97	-0.05
76	SLU 83	62	8	7639	-6.62	7.33	-0.04
76	SLU 84	120	8	8004	-10.09	10.01	-0.05
76	SLE RA 1	36	5	4989	-4.4	4.57	-0.03
76	SLE RA 2	100	6	5395	-8.25	7.55	-0.04
76	SLE RA 3	37	5	5059	-4.46	4.67	-0.03
76	SLE RA 4	76	5	5303	-6.78	6.46	-0.03
76	SLE RA 5	100	6	5441	-8.3	7.58	-0.04
76	SLE RA 6	37	5	5106	-4.51	4.7	-0.03
76	SLE RA 7	75	6	5350	-6.82	6.48	-0.03
76	SLE RA 8	36	5	5082	-4.49	4.62	-0.03
76	SLE RA 9	74	6	5326	-6.8	6.41	-0.03
76	SLE RA 10	105	6	5824	-8.58	8.04	-0.04
76	SLE RA 11	42	6	5489	-4.79	5.16	-0.03
76	SLE RA 12	81	6	5732	-7.1	6.95	-0.04
76	SLE RA 13	105	6	5871	-8.63	8.07	-0.04
76	SLE RA 14	42	6	5536	-4.84	5.18	-0.03
76	SLE RA 15	81	6	5779	-7.15	6.97	-0.04
76	SLE RA 16	41	6	5512	-4.82	5.11	-0.03
76	SLE RA 17	79	6	5755	-7.13	6.9	-0.04
76	SLE RA 18	44	6	5602	-4.87	5.27	-0.03
76	SLE RA 19	82	6	5846	-7.18	7.06	-0.04
76	SLE RA 20	43	6	5649	-4.91	5.29	-0.03
76	SLE RA 21	82	6	5892	-7.23	7.08	-0.04
76	SLE FR 1	36	5	4989	-4.4	4.57	-0.03
76	SLE FR 2	49	5	5070	-5.17	5.17	-0.03
76	SLE FR 3	36	5	5007	-4.42	4.58	-0.03
76	SLE FR 4	51	5	5254	-5.31	5.38	-0.03
76	SLE FR 5	38	5	5191	-4.56	4.79	-0.03
76	SLE FR 6	40	5	5295	-4.63	4.92	-0.03
76	SLE QP 1	36	5	4989	-4.4	4.57	-0.03
76	SLE QP 2	38	5	5173	-4.54	4.78	-0.03
76	SLD 1	1097	6	5856	-4.91	52.04	-0.04
76	SLD 2	1097	6	5856	-4.91	52.04	-0.04
76	SLD 3	1213	-3	4929	-0.18	56.47	-0.02
76	SLD 4	1213	-3	4929	-0.18	56.47	-0.02
76	SLD 5	179	18	6783	-11.83	12.23	-0.06
76	SLD 6	179	18	6783	-11.83	12.23	-0.06
76	SLD 7	567	-10	3694	3.95	27.01	0.01
76	SLD 8	567	-10	3694	3.95	27.01	0.01
76	SLD 9	-491	21	6651	-13.03	-17.46	-0.06
76	SLD 10	-491	21	6651	-13.03	-17.46	-0.06
76	SLD 11	-103	-8	3563	2.76	-2.67	0.01
76	SLD 12	-103	-8	3563	2.76	-2.67	0.01
76	SLD 13	-1137	14	5416	-8.9	-46.91	-0.03
76	SLD 14	-1137	14	5416	-8.9	-46.91	-0.03
76	SLD 15	-1020	5	4490	-4.16	-42.48	-0.01
76	SLD 16	-1020	5	4490	-4.16	-42.48	-0.01
76	SLV 1	2438	6	6815	-5.52	111.86	-0.07
76	SLV 2	2438	6	6815	-5.52	111.86	-0.07
76	SLV 3	2724	-16	4609	6.3	122.91	-0.02
76	SLV 4	2724	-16	4609	6.3	122.91	-0.02
76	SLV 5	324	38	9011	-22.77	20.15	-0.11
76	SLV 6	324	38	9011	-22.77	20.15	-0.11
76	SLV 7	1278	-33	1658	16.65	56.98	0.05
76	SLV 8	1278	-33	1658	16.65	56.98	0.05
76	SLV 9	-1201	44	8688	-25.72	-47.42	-0.11
76	SLV 10	-1201	44	8688	-25.72	-47.42	-0.11
76	SLV 11	-248	-27	1334	13.69	-10.59	0.06
76	SLV 12	-248	-27	1334	13.69	-10.59	0.06
76	SLV 13	-2647	26	5736	-15.38	-113.35	-0.04
76	SLV 14	-2647	26	5736	-15.38	-113.35	-0.04
76	SLV 15	-2361	5	3530	-3.56	-102.3	0.01
76	SLV 16	-2361	5	3530	-3.56	-102.3	0.01

Nodo	Cont.	Reazione a traslazione			Reazione a rotazione		
Ind.	N.br.	x	y	z	x	y	z
77	SLU 1	-25	10	4671	-7.4	-2.15	0
77	SLU 2	54	11	5230	-18.98	1.55	0.01
77	SLU 3	-25	10	4774	-7.57	-2.19	0
77	SLU 4	22	11	5109	-14.52	0.03	0
77	SLU 5	52	12	5297	-19.1	1.46	0.01
77	SLU 6	-27	10	4841	-7.69	-2.28	0
77	SLU 7	21	11	5177	-14.64	-0.06	0
77	SLU 8	-28	10	4806	-7.64	-2.32	0
77	SLU 9	19	11	5141	-14.59	-0.1	0
77	SLU 10	57	13	5860	-19.82	1.46	0.01
77	SLU 11	-22	11	5404	-8.41	-2.28	0
77	SLU 12	25	12	5739	-15.36	-0.06	0
77	SLU 13	55	13	5927	-19.94	1.38	0.01
77	SLU 14	-24	11	5471	-8.53	-2.37	0
77	SLU 15	23	13	5807	-15.48	-0.15	0
77	SLU 16	-25	11	5436	-8.48	-2.41	0
77	SLU 17	22	13	5771	-15.43	-0.19	0
77	SLU 18	-21	12	5572	-8.6	-2.28	0
77	SLU 19	26	13	5907	-15.55	-0.06	0
77	SLU 20	-23	12	5639	-8.72	-2.36	0
77	SLU 21	25	13	5974	-15.67	-0.14	0
77	SLU 22	-16	11	5231	-8.19	-1.94	0
77	SLU 23	63	13	5789	-19.77	1.76	0.01
77	SLU 24	-16	11	5333	-8.36	-1.98	0
77	SLU 25	31	12	5669	-15.31	0.24	0
77	SLU 26	62	13	5857	-19.89	1.68	0.01
77	SLU 27	-17	11	5401	-8.48	-2.06	0
77	SLU 28	30	12	5736	-15.43	0.16	0
77	SLU 29	-19	11	5366	-8.42	-2.11	0
77	SLU 30	29	12	5701	-15.37	0.11	0
77	SLU 31	66	14	6420	-20.61	1.67	0.01
77	SLU 32	-13	13	5964	-9.2	-2.07	0
77	SLU 33	34	14	6299	-16.15	0.15	0
77	SLU 34	64	14	6487	-20.73	1.59	0.01
77	SLU 35	-15	13	6031	-9.32	-2.15	0
77	SLU 36	32	14	6366	-16.26	0.07	0
77	SLU 37	-16	13	5996	-9.26	-2.2	0
77	SLU 38	31	14	6331	-16.21	0.02	0
77	SLU 39	-12	13	6131	-9.39	-2.06	0
77	SLU 40	35	14	6466	-16.33	0.16	0
77	SLU 41	-13	13	6198	-9.5	-2.15	0
77	SLU 42	34	14	6534	-16.45	0.07	0
77	SLU 43	-35	12	5881	-9.35	-2.87	0
77	SLU 44	43	14	6440	-20.93	0.83	0.01
77	SLU 45	-36	12	5984	-9.52	-2.91	0
77	SLU 46	12	13	6319	-16.47	-0.69	0.01
77	SLU 47	42	14	6507	-21.05	0.75	0.01
77	SLU 48	-37	12	6051	-9.64	-3	0
77	SLU 49	10	14	6386	-16.59	-0.78	0.01
77	SLU 50	-38	12	6016	-9.59	-3.04	0
77	SLU 51	9	14	6351	-16.54	-0.82	0.01
77	SLU 52	46	15	7070	-21.77	0.74	0.01
77	SLU 53	-33	14	6614	-10.36	-3	0
77	SLU 54	14	15	6949	-17.31	-0.78	0
77	SLU 55	44	16	7137	-21.89	0.66	0.01
77	SLU 56	-34	14	6681	-10.48	-3.09	0
77	SLU 57	13	15	7016	-17.43	-0.87	0
77	SLU 58	-36	14	6646	-10.43	-3.13	0
77	SLU 59	11	15	6981	-17.38	-0.91	0
77	SLU 60	-32	14	6781	-10.55	-2.99	0
77	SLU 61	16	15	7116	-17.5	-0.77	0
77	SLU 62	-33	14	6848	-10.67	-3.08	0
77	SLU 63	14	15	7184	-17.62	-0.86	0
77	SLU 64	-26	13	6440	-10.14	-2.65	0
77	SLU 65	52	15	6999	-21.72	1.05	0.01
77	SLU 66	-26	14	6543	-10.31	-2.7	0
77	SLU 67	21	15	6878	-17.26	-0.48	0
77	SLU 68	51	15	7066	-21.84	0.96	0.01
77	SLU 69	-28	14	6610	-10.43	-2.78	0
77	SLU 70	19	15	6946	-17.38	-0.56	0
77	SLU 71	-29	14	6575	-10.37	-2.82	0
77	SLU 72	18	15	6910	-17.32	-0.6	0
77	SLU 73	55	17	7629	-22.56	0.96	0.01
77	SLU 74	-24	15	7173	-11.15	-2.79	0
77	SLU 75	23	16	7508	-18.1	-0.57	0
77	SLU 76	54	17	7697	-22.68	0.87	0.01
77	SLU 77	-25	15	7241	-11.27	-2.87	0
77	SLU 78	22	16	7576	-18.22	-0.65	0
77	SLU 79	-27	15	7205	-11.21	-2.91	0
77	SLU 80	21	16	7540	-18.16	-0.69	0
77	SLU 81	-22	15	7341	-11.34	-2.78	0
77	SLU 82	25	17	7676	-18.28	-0.56	0
77	SLU 83	-24	16	7408	-11.45	-2.87	0
77	SLU 84	23	17	7743	-18.4	-0.65	0
77	SLE RA 1	-22	10	4831	-7.63	-2.09	0
77	SLE RA 2	30	11	5204	-15.35	0.38	0
77	SLE RA 3	-22	10	4900	-7.74	-2.12	0
77	SLE RA 4	9	11	5123	-12.37	-0.64	0
77	SLE RA 5	29	11	5249	-15.43	0.32	0
77	SLE RA 6	-23	10	4945	-7.82	-2.17	0
77	SLE RA 7	8	11	5168	-12.45	-0.69	0

Nodo	Cont.	Reazione a traslazione			Reazione a rotazione		
Ind.	N.br.	x	y	z	x	y	z
77	SLE RA 8	-24	10	4921	-7.78	-2.2	0
77	SLE RA 9	7	11	5144	-12.42	-0.72	0
77	SLE RA 10	32	12	5624	-15.91	0.32	0
77	SLE RA 11	-21	11	5320	-8.3	-2.18	0
77	SLE RA 12	11	12	5543	-12.93	-0.7	0
77	SLE RA 13	31	12	5669	-15.98	0.26	0
77	SLE RA 14	-22	11	5365	-8.38	-2.23	0
77	SLE RA 15	10	12	5588	-13.01	-0.75	0
77	SLE RA 16	-22	11	5341	-8.34	-2.26	0
77	SLE RA 17	9	12	5565	-12.98	-0.78	0
77	SLE RA 18	-20	11	5431	-8.42	-2.17	0
77	SLE RA 19	12	12	5655	-13.06	-0.69	0
77	SLE RA 20	-21	11	5476	-8.5	-2.23	0
77	SLE RA 21	11	12	5700	-13.14	-0.75	0
77	SLE FR 1	-22	10	4831	-7.63	-2.09	0
77	SLE FR 2	-12	10	4906	-9.17	-1.59	0
77	SLE FR 3	-23	10	4849	-7.66	-2.11	0
77	SLE FR 4	-11	11	5086	-9.41	-1.62	0
77	SLE FR 5	-22	10	5029	-7.9	-2.14	0
77	SLE FR 6	-21	11	5131	-8.03	-2.13	0
77	SLE QP 1	-22	10	4831	-7.63	-2.09	0
77	SLE QP 2	-21	10	5011	-7.87	-2.11	0
77	SLD 1	978	0	5217	-8.34	41.69	0.03
77	SLD 2	978	0	5217	-8.34	41.69	0.03
77	SLD 3	1110	11	4454	0.77	46.83	0
77	SLD 4	1110	11	4454	0.77	46.83	0
77	SLD 5	79	-10	6230	-21.81	3.23	0.06
77	SLD 6	79	-10	6230	-21.81	3.23	0.06
77	SLD 7	517	27	3687	8.53	20.37	-0.05
77	SLD 8	517	27	3687	8.53	20.37	-0.05
77	SLD 9	-560	-6	6335	-24.26	-24.59	0.05
77	SLD 10	-560	-6	6335	-24.26	-24.59	0.05
77	SLD 11	-122	30	3792	6.08	-7.46	-0.06
77	SLD 12	-122	30	3792	6.08	-7.46	-0.06
77	SLD 13	-1152	10	5568	-16.5	-51.06	0
77	SLD 14	-1152	10	5568	-16.5	-51.06	0
77	SLD 15	-1021	21	4805	-7.39	-45.92	-0.03
77	SLD 16	-1021	21	4805	-7.39	-45.92	-0.03
77	SLV 1	2241	-17	5487	-9.25	97.13	0.08
77	SLV 2	2241	-17	5487	-9.25	97.13	0.08
77	SLV 3	2566	11	3667	13.61	109.8	0
77	SLV 4	2566	11	3667	13.61	109.8	0
77	SLV 5	165	-40	7916	-42.96	8.44	0.15
77	SLV 6	165	-40	7916	-42.96	8.44	0.15
77	SLV 7	1247	53	1846	33.26	50.68	-0.12
77	SLV 8	1247	53	1846	33.26	50.68	-0.12
77	SLV 9	-1289	-32	8176	-48.99	-54.9	0.12
77	SLV 10	-1289	-32	8176	-48.99	-54.9	0.12
77	SLV 11	-208	61	2107	27.23	-12.67	-0.14
77	SLV 12	-208	61	2107	27.23	-12.67	-0.14
77	SLV 13	-2608	10	6356	-29.34	-114.03	0
77	SLV 14	-2608	10	6356	-29.34	-114.03	0
77	SLV 15	-2284	37	4535	-6.48	-101.36	-0.08
77	SLV 16	-2284	37	4535	-6.48	-101.36	-0.08
78	SLU 1	-54	19	4573	-11.51	-0.3	-0.06
78	SLU 2	-5	27	5094	-30.01	1.95	-0.08
78	SLU 3	-56	20	4674	-11.78	-0.29	-0.06
78	SLU 4	-26	25	4986	-22.88	1.06	-0.08
78	SLU 5	-7	28	5160	-30.19	1.91	-0.09
78	SLU 6	-57	20	4739	-11.97	-0.34	-0.07
78	SLU 7	-28	25	5052	-23.07	1.01	-0.08
78	SLU 8	-58	20	4705	-11.88	-0.39	-0.06
78	SLU 9	-28	25	5017	-22.98	0.96	-0.08
78	SLU 10	-6	30	5717	-31.26	2.17	-0.09
78	SLU 11	-57	22	5296	-13.04	-0.07	-0.07
78	SLU 12	-27	27	5609	-24.13	1.28	-0.09
78	SLU 13	-8	30	5782	-31.44	2.13	-0.09
78	SLU 14	-59	23	5362	-13.22	-0.12	-0.07
78	SLU 15	-29	28	5675	-24.32	1.23	-0.09
78	SLU 16	-59	23	5327	-13.13	-0.17	-0.07
78	SLU 17	-30	27	5640	-24.23	1.18	-0.09
78	SLU 18	-56	23	5463	-13.3	0.02	-0.07
78	SLU 19	-26	28	5775	-24.4	1.37	-0.09
78	SLU 20	-58	23	5528	-13.48	-0.03	-0.08
78	SLU 21	-28	28	5841	-24.58	1.32	-0.09
78	SLU 22	-50	22	5125	-12.69	0.15	-0.07
78	SLU 23	0	30	5646	-31.19	2.4	-0.09
78	SLU 24	-51	22	5226	-12.97	0.16	-0.07
78	SLU 25	-21	27	5539	-24.07	1.51	-0.09
78	SLU 26	-2	30	5712	-31.38	2.35	-0.09
78	SLU 27	-53	23	5292	-13.15	0.11	-0.07
78	SLU 28	-23	28	5604	-24.25	1.46	-0.09
78	SLU 29	-54	22	5257	-13.07	0.06	-0.07
78	SLU 30	-24	27	5569	-24.16	1.41	-0.09
78	SLU 31	-1	32	6269	-32.44	2.62	-0.1
78	SLU 32	-52	25	5849	-14.22	0.38	-0.08
78	SLU 33	-22	30	6161	-25.32	1.73	-0.09
78	SLU 34	-3	33	6335	-32.63	2.57	-0.1
78	SLU 35	-54	25	5915	-14.41	0.33	-0.08
78	SLU 36	-24	30	6227	-25.5	1.68	-0.1
78	SLU 37	-55	25	5880	-14.32	0.28	-0.08

Nodo	Cont.	Reazione a traslazione			Reazione a rotazione		
Ind.	N.br.	x	y	z	x	y	z
78	SLU 38	-25	30	6192	-25.42	1.63	-0.09
78	SLU 39	-52	25	6015	-14.48	0.46	-0.08
78	SLU 40	-22	30	6327	-25.58	1.81	-0.1
78	SLU 41	-53	26	6081	-14.67	0.42	-0.08
78	SLU 42	-24	31	6393	-25.77	1.77	-0.1
78	SLU 43	-72	24	5756	-14.56	-0.54	-0.08
78	SLU 44	-23	32	6276	-33.05	1.71	-0.1
78	SLU 45	-73	25	5856	-14.83	-0.53	-0.08
78	SLU 46	-44	30	6169	-25.93	0.82	-0.09
78	SLU 47	-25	33	6342	-33.24	1.66	-0.1
78	SLU 48	-75	25	5922	-15.02	-0.58	-0.08
78	SLU 49	-45	30	6234	-26.11	0.77	-0.09
78	SLU 50	-76	25	5887	-14.93	-0.63	-0.08
78	SLU 51	-46	30	6200	-26.02	0.72	-0.09
78	SLU 52	-24	35	6899	-34.3	1.93	-0.11
78	SLU 53	-75	27	6479	-16.08	-0.31	-0.09
78	SLU 54	-45	32	6791	-27.18	1.04	-0.1
78	SLU 55	-26	35	6965	-34.49	1.89	-0.11
78	SLU 56	-77	28	6545	-16.27	-0.36	-0.09
78	SLU 57	-47	33	6857	-27.37	0.99	-0.1
78	SLU 58	-77	28	6510	-16.18	-0.41	-0.09
78	SLU 59	-48	32	6822	-27.28	0.94	-0.1
78	SLU 60	-74	28	6645	-16.34	-0.23	-0.09
78	SLU 61	-44	33	6958	-27.44	1.12	-0.1
78	SLU 62	-76	28	6711	-16.53	-0.27	-0.09
78	SLU 63	-46	33	7023	-27.63	1.08	-0.11
78	SLU 64	-68	27	6308	-15.74	-0.09	-0.09
78	SLU 65	-18	35	6829	-34.24	2.16	-0.11
78	SLU 66	-69	27	6409	-16.01	-0.09	-0.09
78	SLU 67	-39	32	6721	-27.11	1.26	-0.1
78	SLU 68	-20	35	6894	-34.42	2.11	-0.11
78	SLU 69	-71	28	6474	-16.2	-0.13	-0.09
78	SLU 70	-41	32	6787	-27.3	1.22	-0.1
78	SLU 71	-72	27	6440	-16.11	-0.18	-0.09
78	SLU 72	-42	32	6752	-27.21	1.17	-0.1
78	SLU 73	-19	37	7451	-35.49	2.38	-0.12
78	SLU 74	-70	30	7031	-17.27	0.13	-0.1
78	SLU 75	-40	35	7344	-28.36	1.48	-0.11
78	SLU 76	-21	38	7517	-35.68	2.33	-0.12
78	SLU 77	-72	30	7097	-17.45	0.09	-0.1
78	SLU 78	-42	35	7410	-28.55	1.44	-0.11
78	SLU 79	-73	30	7062	-17.36	0.04	-0.1
78	SLU 80	-43	35	7375	-28.46	1.39	-0.11
78	SLU 81	-69	30	7198	-17.53	0.22	-0.1
78	SLU 82	-40	35	7510	-28.63	1.57	-0.11
78	SLU 83	-71	31	7263	-17.72	0.18	-0.1
78	SLU 84	-42	36	7576	-28.81	1.53	-0.11
78	SLE RA 1	-53	20	4731	-11.85	-0.17	-0.06
78	SLE RA 2	-20	25	5078	-24.18	1.33	-0.08
78	SLE RA 3	-54	20	4798	-12.03	-0.17	-0.07
78	SLE RA 4	-34	24	5006	-19.43	0.73	-0.07
78	SLE RA 5	-21	26	5122	-24.3	1.3	-0.08
78	SLE RA 6	-55	21	4842	-12.15	-0.2	-0.07
78	SLE RA 7	-35	24	5050	-19.55	0.7	-0.08
78	SLE RA 8	-56	21	4819	-12.1	-0.23	-0.07
78	SLE RA 9	-36	24	5027	-19.49	0.67	-0.08
78	SLE RA 10	-21	27	5493	-25.01	1.48	-0.09
78	SLE RA 11	-55	22	5213	-12.87	-0.02	-0.07
78	SLE RA 12	-35	25	5421	-20.26	0.88	-0.08
78	SLE RA 13	-22	27	5537	-25.14	1.45	-0.09
78	SLE RA 14	-56	22	5257	-12.99	-0.05	-0.07
78	SLE RA 15	-36	26	5465	-20.39	0.85	-0.08
78	SLE RA 16	-56	22	5234	-12.93	-0.08	-0.07
78	SLE RA 17	-37	25	5442	-20.33	0.82	-0.08
78	SLE RA 18	-54	22	5324	-13.04	0.04	-0.07
78	SLE RA 19	-34	26	5532	-20.44	0.94	-0.08
78	SLE RA 20	-56	23	5368	-13.16	0.01	-0.07
78	SLE RA 21	-36	26	5576	-20.56	0.91	-0.08
78	SLE FR 1	-53	20	4731	-11.85	-0.17	-0.06
78	SLE FR 2	-46	21	4800	-14.31	0.13	-0.07
78	SLE FR 3	-54	20	4748	-11.9	-0.18	-0.07
78	SLE FR 4	-47	22	4978	-14.67	0.19	-0.07
78	SLE FR 5	-54	21	4926	-12.26	-0.12	-0.07
78	SLE FR 6	-54	21	5027	-12.44	-0.07	-0.07
78	SLE QP 1	-53	20	4731	-11.85	-0.17	-0.06
78	SLE QP 2	-53	21	4909	-12.21	-0.11	-0.07
78	SLD 1	906	21	4979	-13.06	42.37	-0.07
78	SLD 2	906	21	4979	-13.06	42.37	-0.07
78	SLD 3	1051	9	4327	1.03	48.15	-0.03
78	SLD 4	1051	9	4327	1.03	48.15	-0.03
78	SLD 5	14	39	5919	-33.83	3.86	-0.13
78	SLD 6	14	39	5919	-33.83	3.86	-0.13
78	SLD 7	498	-1	3745	13.14	23.15	0.01
78	SLD 8	498	-1	3745	13.14	23.15	0.01
78	SLD 9	-605	42	6072	-37.55	-23.36	-0.14
78	SLD 10	-605	42	6072	-37.55	-23.36	-0.14
78	SLD 11	-121	3	3899	9.42	-4.07	0
78	SLD 12	-121	3	3899	9.42	-4.07	0
78	SLD 13	-1158	33	5490	-25.44	-48.37	-0.11
78	SLD 14	-1158	33	5490	-25.44	-48.37	-0.11
78	SLD 15	-1013	21	4838	-11.35	-42.58	-0.07

Nodo	Cont.	Reazione a traslazione			Reazione a rotazione		
Ind.	N.br.	x	y	z	x	y	z
78	SLD 16	-1013	21	4838	-11.35	-42.58	-0.07
78	SLV 1	2116	20	5075	-14.65	95.95	-0.07
78	SLV 2	2116	20	5075	-14.65	95.95	-0.07
78	SLV 3	2476	-9	3522	20.84	110.34	0.03
78	SLV 4	2476	-9	3522	20.84	110.34	0.03
78	SLV 5	52	65	7315	-66.76	6.88	-0.22
78	SLV 6	52	65	7315	-66.76	6.88	-0.22
78	SLV 7	1251	-33	2137	51.53	54.85	0.12
78	SLV 8	1251	-33	2137	51.53	54.85	0.12
78	SLV 9	-1358	74	7681	-75.94	-55.07	-0.25
78	SLV 10	-1358	74	7681	-75.94	-55.07	-0.25
78	SLV 11	-159	-24	2503	42.35	-7.1	0.09
78	SLV 12	-159	-24	2503	42.35	-7.1	0.09
78	SLV 13	-2583	50	6296	-45.25	-110.55	-0.17
78	SLV 14	-2583	50	6296	-45.25	-110.55	-0.17
78	SLV 15	-2223	21	4742	-9.76	-96.16	-0.07
78	SLV 16	-2223	21	4742	-9.76	-96.16	-0.07
79	SLU 1	-151	25	4460	-14.71	-7.36	-0.12
79	SLU 2	-133	40	4933	-40.17	-6.24	-0.19
79	SLU 3	-155	26	4558	-15.07	-7.55	-0.13
79	SLU 4	-144	35	4842	-30.34	-6.87	-0.16
79	SLU 5	-137	41	4997	-40.41	-6.41	-0.19
79	SLU 6	-158	27	4622	-15.3	-7.72	-0.13
79	SLU 7	-148	36	4906	-30.58	-7.04	-0.17
79	SLU 8	-158	26	4588	-15.19	-7.7	-0.13
79	SLU 9	-148	35	4872	-30.46	-7.03	-0.17
79	SLU 10	-151	43	5545	-41.69	-7.14	-0.2
79	SLU 11	-172	29	5170	-16.59	-8.45	-0.14
79	SLU 12	-162	38	5454	-31.86	-7.77	-0.18
79	SLU 13	-154	44	5609	-41.93	-7.31	-0.21
79	SLU 14	-176	30	5234	-16.82	-8.62	-0.14
79	SLU 15	-165	39	5518	-32.1	-7.94	-0.18
79	SLU 16	-176	30	5200	-16.71	-8.6	-0.14
79	SLU 17	-165	38	5484	-31.98	-7.93	-0.18
79	SLU 18	-176	30	5334	-16.89	-8.65	-0.14
79	SLU 19	-165	39	5618	-32.16	-7.97	-0.18
79	SLU 20	-180	31	5398	-17.12	-8.82	-0.15
79	SLU 21	-169	39	5682	-32.4	-8.14	-0.19
79	SLU 22	-162	29	5002	-16.17	-7.95	-0.14
79	SLU 23	-144	43	5476	-41.63	-6.82	-0.2
79	SLU 24	-165	29	5100	-16.52	-8.13	-0.14
79	SLU 25	-155	38	5385	-31.8	-7.46	-0.18
79	SLU 26	-147	44	5540	-41.86	-6.99	-0.2
79	SLU 27	-169	30	5165	-16.76	-8.3	-0.14
79	SLU 28	-158	39	5449	-32.03	-7.63	-0.18
79	SLU 29	-169	29	5130	-16.64	-8.29	-0.14
79	SLU 30	-158	38	5414	-31.92	-7.61	-0.18
79	SLU 31	-161	46	6088	-43.15	-7.73	-0.22
79	SLU 32	-183	32	5712	-18.04	-9.03	-0.16
79	SLU 33	-172	41	5997	-33.32	-8.36	-0.2
79	SLU 34	-165	47	6152	-43.39	-7.9	-0.22
79	SLU 35	-186	33	5777	-18.28	-9.2	-0.16
79	SLU 36	-175	42	6061	-33.55	-8.53	-0.2
79	SLU 37	-186	33	5742	-18.16	-9.19	-0.16
79	SLU 38	-175	42	6026	-33.44	-8.51	-0.2
79	SLU 39	-187	33	5876	-18.34	-9.23	-0.16
79	SLU 40	-176	42	6160	-33.62	-8.56	-0.2
79	SLU 41	-190	34	5941	-18.58	-9.4	-0.16
79	SLU 42	-179	42	6225	-33.85	-8.73	-0.2
79	SLU 43	-193	32	5612	-18.63	-9.37	-0.15
79	SLU 44	-175	47	6085	-44.09	-8.24	-0.22
79	SLU 45	-197	33	5710	-18.98	-9.55	-0.16
79	SLU 46	-186	42	5994	-34.26	-8.88	-0.2
79	SLU 47	-179	47	6149	-44.32	-8.41	-0.22
79	SLU 48	-200	33	5774	-19.22	-9.72	-0.16
79	SLU 49	-189	42	6058	-34.49	-9.05	-0.2
79	SLU 50	-200	33	5740	-19.1	-9.71	-0.16
79	SLU 51	-189	42	6024	-34.38	-9.03	-0.2
79	SLU 52	-193	50	6697	-45.61	-9.15	-0.23
79	SLU 53	-214	36	6322	-20.5	-10.45	-0.17
79	SLU 54	-203	45	6606	-35.78	-9.78	-0.21
79	SLU 55	-196	50	6761	-45.84	-9.32	-0.24
79	SLU 56	-218	36	6386	-20.74	-10.62	-0.18
79	SLU 57	-207	45	6670	-36.01	-9.95	-0.21
79	SLU 58	-218	36	6352	-20.62	-10.61	-0.17
79	SLU 59	-207	45	6636	-35.9	-9.93	-0.21
79	SLU 60	-218	37	6486	-20.8	-10.65	-0.18
79	SLU 61	-207	46	6770	-36.08	-9.98	-0.22
79	SLU 62	-222	37	6550	-21.04	-10.82	-0.18
79	SLU 63	-211	46	6834	-36.31	-10.15	-0.22
79	SLU 64	-204	35	6154	-20.08	-9.95	-0.17
79	SLU 65	-186	50	6627	-45.54	-8.83	-0.23
79	SLU 66	-207	36	6252	-20.44	-10.14	-0.17
79	SLU 67	-196	45	6537	-35.71	-9.47	-0.21
79	SLU 68	-189	50	6692	-45.78	-9	-0.24
79	SLU 69	-211	36	6317	-20.67	-10.31	-0.17
79	SLU 70	-200	45	6601	-35.95	-9.64	-0.21
79	SLU 71	-211	36	6282	-20.56	-10.3	-0.17
79	SLU 72	-200	45	6566	-35.83	-9.62	-0.21
79	SLU 73	-203	53	7240	-47.06	-9.73	-0.25
79	SLU 74	-225	39	6864	-21.96	-11.04	-0.19

Nodo	Cont.	Reazione a traslazione			Reazione a rotazione		
Ind.	N.br.	x	y	z	x	y	z
79	SLU 75	-214	48	7149	-37.23	-10.37	-0.23
79	SLU 76	-206	54	7304	-47.3	-9.9	-0.25
79	SLU 77	-228	40	6929	-22.2	-11.21	-0.19
79	SLU 78	-217	48	7213	-37.47	-10.54	-0.23
79	SLU 79	-228	39	6894	-22.08	-11.2	-0.19
79	SLU 80	-217	48	7178	-37.35	-10.52	-0.23
79	SLU 81	-228	40	7028	-22.26	-11.24	-0.19
79	SLU 82	-218	49	7312	-37.53	-10.57	-0.23
79	SLU 83	-232	40	7092	-22.5	-11.41	-0.19
79	SLU 84	-221	49	7377	-37.77	-10.74	-0.23
79	SLE RA 1	-154	26	4615	-15.13	-7.53	-0.13
79	SLE RA 2	-142	36	4930	-32.1	-6.78	-0.17
79	SLE RA 3	-157	27	4680	-15.36	-7.65	-0.13
79	SLE RA 4	-149	33	4870	-25.55	-7.2	-0.15
79	SLE RA 5	-145	36	4973	-32.26	-6.89	-0.17
79	SLE RA 6	-159	27	4723	-15.52	-7.77	-0.13
79	SLE RA 7	-152	33	4912	-25.7	-7.32	-0.16
79	SLE RA 8	-159	27	4700	-15.44	-7.76	-0.13
79	SLE RA 9	-152	33	4890	-25.63	-7.31	-0.16
79	SLE RA 10	-154	38	5338	-33.12	-7.38	-0.18
79	SLE RA 11	-168	29	5088	-16.38	-8.25	-0.14
79	SLE RA 12	-161	35	5278	-26.56	-7.8	-0.17
79	SLE RA 13	-156	39	5381	-33.27	-7.49	-0.18
79	SLE RA 14	-171	29	5131	-16.54	-8.37	-0.14
79	SLE RA 15	-163	35	5320	-26.72	-7.92	-0.17
79	SLE RA 16	-171	29	5108	-16.46	-8.36	-0.14
79	SLE RA 17	-163	35	5298	-26.64	-7.91	-0.17
79	SLE RA 18	-171	29	5198	-16.58	-8.39	-0.14
79	SLE RA 19	-164	35	5387	-26.76	-7.94	-0.17
79	SLE RA 20	-173	30	5240	-16.74	-8.5	-0.14
79	SLE RA 21	-166	36	5430	-26.92	-8.05	-0.17
79	SLE FR 1	-154	26	4615	-15.13	-7.53	-0.13
79	SLE FR 2	-152	28	4678	-18.52	-7.38	-0.14
79	SLE FR 3	-155	26	4632	-15.19	-7.57	-0.13
79	SLE FR 4	-157	29	4853	-18.96	-7.64	-0.14
79	SLE FR 5	-160	27	4807	-15.63	-7.83	-0.13
79	SLE FR 6	-163	28	4906	-15.85	-7.96	-0.13
79	SLE QP 1	-154	26	4615	-15.13	-7.53	-0.13
79	SLE QP 2	-159	27	4790	-15.56	-7.79	-0.13
79	SLD 1	780	27	4675	-16.89	33.43	-0.13
79	SLD 2	780	27	4675	-16.89	33.43	-0.13
79	SLD 3	925	12	4115	2.41	39.18	-0.06
79	SLD 4	925	12	4115	2.41	39.18	-0.06
79	SLD 5	-99	51	5605	-45.23	-4.15	-0.24
79	SLD 6	-99	51	5605	-45.23	-4.15	-0.24
79	SLD 7	387	-1	3738	19.1	15.03	0
79	SLD 8	387	-1	3738	19.1	15.03	0
79	SLD 9	-706	55	5841	-50.22	-30.6	-0.26
79	SLD 10	-706	55	5841	-50.22	-30.6	-0.26
79	SLD 11	-220	4	3974	14.1	-11.43	-0.02
79	SLD 12	-220	4	3974	14.1	-11.43	-0.02
79	SLD 13	-1244	43	5464	-33.54	-54.76	-0.2
79	SLD 14	-1244	43	5464	-33.54	-54.76	-0.2
79	SLD 15	-1098	27	4904	-14.24	-49	-0.13
79	SLD 16	-1098	27	4904	-14.24	-49	-0.13
79	SLV 1	1963	28	4530	-19.29	85.48	-0.14
79	SLV 2	1963	28	4530	-19.29	85.48	-0.14
79	SLV 3	2325	-11	3201	29.46	99.72	0.04
79	SLV 4	2325	-11	3201	29.46	99.72	0.04
79	SLV 5	-71	85	6727	-90.63	-1.4	-0.4
79	SLV 6	-71	85	6727	-90.63	-1.4	-0.4
79	SLV 7	1135	-42	2298	71.89	46.06	0.19
79	SLV 8	1135	-42	2298	71.89	46.06	0.19
79	SLV 9	-1453	97	7282	-103.01	-61.63	-0.45
79	SLV 10	-1453	97	7282	-103.01	-61.63	-0.45
79	SLV 11	-247	-31	2852	59.5	-14.17	0.14
79	SLV 12	-247	-31	2852	59.5	-14.17	0.14
79	SLV 13	-2643	65	6378	-60.59	-115.29	-0.3
79	SLV 14	-2643	65	6378	-60.59	-115.29	-0.3
79	SLV 15	-2282	27	5049	-11.83	-101.05	-0.12
79	SLV 16	-2282	27	5049	-11.83	-101.05	-0.12
80	SLU 1	-172	28	4328	-16.52	-5.29	-0.17
80	SLU 2	-196	48	4742	-48.11	-6.08	-0.29
80	SLU 3	-176	29	4424	-16.91	-5.4	-0.17
80	SLU 4	-190	41	4672	-35.87	-5.87	-0.24
80	SLU 5	-200	49	4805	-48.37	-6.19	-0.29
80	SLU 6	-179	29	4486	-17.18	-5.52	-0.18
80	SLU 7	-194	41	4735	-36.13	-5.99	-0.25
80	SLU 8	-179	29	4453	-17.04	-5.53	-0.18
80	SLU 9	-193	41	4701	-36	-6	-0.25
80	SLU 10	-220	52	5338	-49.72	-6.8	-0.31
80	SLU 11	-199	32	5020	-18.52	-6.13	-0.19
80	SLU 12	-214	44	5269	-37.48	-6.6	-0.26
80	SLU 13	-223	52	5401	-49.98	-6.92	-0.31
80	SLU 14	-203	32	5083	-18.79	-6.24	-0.2
80	SLU 15	-217	45	5331	-37.74	-6.71	-0.27
80	SLU 16	-203	32	5049	-18.65	-6.25	-0.2
80	SLU 17	-217	44	5297	-37.61	-6.72	-0.27
80	SLU 18	-206	33	5180	-18.82	-6.33	-0.2
80	SLU 19	-220	45	5428	-37.77	-6.8	-0.27
80	SLU 20	-209	33	5242	-19.08	-6.45	-0.2

Nodo	Cont.	Reazione a traslazione			Reazione a rotazione		
Ind.	N.br.	x	y	z	x	y	z
80	SLU 21	-224	45	5491	-38.04	-6.92	-0.27
80	SLU 22	-188	31	4856	-18.08	-5.7	-0.19
80	SLU 23	-212	51	5270	-49.66	-6.49	-0.31
80	SLU 24	-191	32	4952	-18.47	-5.81	-0.19
80	SLU 25	-206	44	5201	-37.42	-6.28	-0.26
80	SLU 26	-215	52	5333	-49.93	-6.6	-0.31
80	SLU 27	-195	32	5014	-18.73	-5.93	-0.2
80	SLU 28	-209	45	5263	-37.69	-6.4	-0.27
80	SLU 29	-195	32	4981	-18.6	-5.94	-0.19
80	SLU 30	-209	44	5229	-37.55	-6.41	-0.27
80	SLU 31	-236	55	5867	-51.28	-7.21	-0.33
80	SLU 32	-215	35	5548	-20.08	-6.54	-0.21
80	SLU 33	-230	47	5797	-39.03	-7.01	-0.28
80	SLU 34	-239	55	5929	-51.54	-7.33	-0.33
80	SLU 35	-219	36	5611	-20.34	-6.65	-0.22
80	SLU 36	-233	48	5859	-39.3	-7.12	-0.29
80	SLU 37	-218	35	5577	-20.21	-6.66	-0.22
80	SLU 38	-233	48	5826	-39.16	-7.13	-0.29
80	SLU 39	-222	36	5708	-20.38	-6.74	-0.22
80	SLU 40	-236	48	5957	-39.33	-7.21	-0.29
80	SLU 41	-225	36	5770	-20.64	-6.86	-0.22
80	SLU 42	-240	49	6019	-39.59	-7.33	-0.29
80	SLU 43	-218	35	5445	-20.94	-6.74	-0.21
80	SLU 44	-242	56	5860	-52.53	-7.52	-0.33
80	SLU 45	-222	36	5541	-21.34	-6.85	-0.22
80	SLU 46	-236	48	5790	-40.29	-7.32	-0.29
80	SLU 47	-246	56	5922	-52.79	-7.64	-0.33
80	SLU 48	-225	36	5604	-21.6	-6.96	-0.22
80	SLU 49	-240	49	5852	-40.55	-7.43	-0.29
80	SLU 50	-225	36	5570	-21.47	-6.97	-0.22
80	SLU 51	-239	48	5819	-40.42	-7.44	-0.29
80	SLU 52	-266	59	6456	-54.14	-8.25	-0.35
80	SLU 53	-245	39	6138	-22.95	-7.57	-0.24
80	SLU 54	-260	51	6386	-41.9	-8.04	-0.31
80	SLU 55	-269	59	6518	-54.4	-8.37	-0.35
80	SLU 56	-249	40	6200	-23.21	-7.69	-0.24
80	SLU 57	-264	52	6448	-42.16	-8.16	-0.31
80	SLU 58	-249	39	6166	-23.08	-7.7	-0.24
80	SLU 59	-263	52	6415	-42.03	-8.17	-0.31
80	SLU 60	-252	40	6297	-23.24	-7.78	-0.24
80	SLU 61	-266	52	6546	-42.2	-8.25	-0.31
80	SLU 62	-255	40	6360	-23.5	-7.89	-0.25
80	SLU 63	-270	53	6608	-42.46	-8.36	-0.32
80	SLU 64	-234	38	5974	-22.5	-7.15	-0.23
80	SLU 65	-258	59	6388	-54.09	-7.93	-0.35
80	SLU 66	-237	39	6069	-22.89	-7.26	-0.24
80	SLU 67	-252	51	6318	-41.85	-7.73	-0.31
80	SLU 68	-261	59	6450	-54.35	-8.05	-0.35
80	SLU 69	-241	39	6132	-23.16	-7.38	-0.24
80	SLU 70	-256	52	6380	-42.11	-7.84	-0.31
80	SLU 71	-241	39	6098	-23.02	-7.38	-0.24
80	SLU 72	-255	52	6347	-41.98	-7.85	-0.31
80	SLU 73	-282	62	6984	-55.7	-8.66	-0.37
80	SLU 74	-261	42	6666	-24.5	-7.98	-0.26
80	SLU 75	-276	55	6914	-43.46	-8.45	-0.33
80	SLU 76	-285	63	7046	-55.96	-8.78	-0.37
80	SLU 77	-265	43	6728	-24.77	-8.1	-0.26
80	SLU 78	-279	55	6976	-43.72	-8.57	-0.33
80	SLU 79	-265	43	6694	-24.63	-8.11	-0.26
80	SLU 80	-279	55	6943	-43.59	-8.58	-0.33
80	SLU 81	-268	43	6825	-24.8	-8.19	-0.26
80	SLU 82	-282	55	7074	-43.75	-8.66	-0.33
80	SLU 83	-271	43	6888	-25.06	-8.3	-0.26
80	SLU 84	-286	56	7136	-44.01	-8.77	-0.34
80	SLE RA 1	-176	29	4479	-16.96	-5.41	-0.17
80	SLE RA 2	-192	42	4755	-38.02	-5.93	-0.25
80	SLE RA 3	-179	29	4543	-17.23	-5.48	-0.18
80	SLE RA 4	-188	37	4709	-29.86	-5.8	-0.22
80	SLE RA 5	-195	43	4797	-38.2	-6.01	-0.25
80	SLE RA 6	-181	30	4584	-17.4	-5.56	-0.18
80	SLE RA 7	-191	38	4750	-30.04	-5.87	-0.23
80	SLE RA 8	-181	29	4562	-17.31	-5.57	-0.18
80	SLE RA 9	-191	38	4728	-29.95	-5.88	-0.23
80	SLE RA 10	-208	45	5153	-39.1	-6.42	-0.27
80	SLE RA 11	-195	31	4940	-18.3	-5.97	-0.19
80	SLE RA 12	-204	40	5106	-30.94	-6.28	-0.24
80	SLE RA 13	-211	45	5194	-39.27	-6.49	-0.27
80	SLE RA 14	-197	32	4982	-18.48	-6.04	-0.19
80	SLE RA 15	-207	40	5148	-31.11	-6.36	-0.24
80	SLE RA 16	-197	32	4960	-18.39	-6.05	-0.19
80	SLE RA 17	-207	40	5125	-31.02	-6.36	-0.24
80	SLE RA 18	-199	32	5047	-18.5	-6.1	-0.19
80	SLE RA 19	-209	40	5213	-31.13	-6.41	-0.24
80	SLE RA 20	-201	32	5088	-18.67	-6.18	-0.2
80	SLE RA 21	-211	40	5254	-31.31	-6.49	-0.24
80	SLE FR 1	-176	29	4479	-16.96	-5.41	-0.17
80	SLE FR 2	-179	31	4534	-21.18	-5.51	-0.19
80	SLE FR 3	-177	29	4496	-17.03	-5.44	-0.18
80	SLE FR 4	-186	32	4705	-21.64	-5.72	-0.2
80	SLE FR 5	-184	30	4666	-17.49	-5.65	-0.18
80	SLE FR 6	-188	30	4763	-17.73	-5.76	-0.18

Nodo	Cont.	Reazione a traslazione			Reazione a rotazione		
Ind.	N.br.	x	y	z	x	y	z
80	SLE QP 1	-176	29	4479	-16.96	-5.41	-0.17
80	SLE QP 2	-183	30	4649	-17.42	-5.62	-0.18
80	SLD 1	766	30	4365	-19.09	36.22	-0.18
80	SLD 2	766	30	4365	-19.09	36.22	-0.18
80	SLD 3	906	11	3870	4.93	41.79	-0.06
80	SLD 4	906	11	3870	4.93	41.79	-0.06
80	SLD 5	-110	60	5315	-54.36	-1.52	-0.35
80	SLD 6	-110	60	5315	-54.36	-1.52	-0.35
80	SLD 7	355	-6	3664	25.71	17.06	0.03
80	SLD 8	355	-6	3664	25.71	17.06	0.03
80	SLD 9	-721	65	5634	-60.56	-28.29	-0.39
80	SLD 10	-721	65	5634	-60.56	-28.29	-0.39
80	SLD 11	-256	0	3983	19.51	-9.72	-0.01
80	SLD 12	-256	0	3983	19.51	-9.72	-0.01
80	SLD 13	-1272	49	5429	-39.78	-53.03	-0.3
80	SLD 14	-1272	49	5429	-39.78	-53.03	-0.3
80	SLD 15	-1132	29	4933	-15.76	-47.45	-0.18
80	SLD 16	-1132	29	4933	-15.76	-47.45	-0.18
80	SLV 1	1963	32	3997	-22.2	89.02	-0.18
80	SLV 2	1963	32	3997	-22.2	89.02	-0.18
80	SLV 3	2311	-17	2827	38.67	102.92	0.11
80	SLV 4	2311	-17	2827	38.67	102.92	0.11
80	SLV 5	-67	105	6228	-111.17	1.69	-0.61
80	SLV 6	-67	105	6228	-111.17	1.69	-0.61
80	SLV 7	1093	-59	2328	91.71	48.03	0.34
80	SLV 8	1093	-59	2328	91.71	48.03	0.34
80	SLV 9	-1459	118	6970	-126.56	-59.26	-0.7
80	SLV 10	-1459	118	6970	-126.56	-59.26	-0.7
80	SLV 11	-299	-45	3071	76.32	-12.92	0.25
80	SLV 12	-299	-45	3071	76.32	-12.92	0.25
80	SLV 13	-2677	77	6472	-73.52	-114.15	-0.47
80	SLV 14	-2677	77	6472	-73.52	-114.15	-0.47
80	SLV 15	-2329	28	5302	-12.65	-100.25	-0.18
80	SLV 16	-2329	28	5302	-12.65	-100.25	-0.18
81	SLU 1	-214	27	4188	-17.21	-9.83	-0.2
81	SLU 2	-281	52	4529	-53.54	-12.28	-0.36
81	SLU 3	-218	28	4281	-17.62	-10.05	-0.2
81	SLU 4	-259	43	4486	-39.42	-11.52	-0.3
81	SLU 5	-285	53	4590	-53.81	-12.47	-0.37
81	SLU 6	-222	28	4342	-17.89	-10.24	-0.21
81	SLU 7	-263	43	4546	-39.69	-11.71	-0.31
81	SLU 8	-222	28	4309	-17.75	-10.21	-0.2
81	SLU 9	-262	43	4514	-39.55	-11.68	-0.3
81	SLU 10	-315	55	5105	-55.11	-13.83	-0.39
81	SLU 11	-252	31	4857	-19.19	-11.59	-0.22
81	SLU 12	-293	46	5062	-40.99	-13.07	-0.32
81	SLU 13	-319	56	5166	-55.38	-14.02	-0.39
81	SLU 14	-256	31	4918	-19.46	-11.78	-0.23
81	SLU 15	-297	46	5123	-41.26	-13.26	-0.33
81	SLU 16	-256	31	4885	-19.32	-11.75	-0.23
81	SLU 17	-296	46	5090	-41.12	-13.23	-0.33
81	SLU 18	-262	31	5011	-19.46	-12.04	-0.23
81	SLU 19	-303	47	5216	-41.25	-13.51	-0.33
81	SLU 20	-266	32	5071	-19.73	-12.23	-0.23
81	SLU 21	-307	47	5276	-41.52	-13.7	-0.33
81	SLU 22	-238	30	4699	-18.75	-10.96	-0.22
81	SLU 23	-306	55	5040	-55.08	-13.41	-0.38
81	SLU 24	-243	31	4792	-19.16	-11.18	-0.22
81	SLU 25	-283	46	4997	-40.96	-12.65	-0.32
81	SLU 26	-310	56	5101	-55.35	-13.6	-0.39
81	SLU 27	-247	31	4853	-19.43	-11.37	-0.23
81	SLU 28	-287	46	5057	-41.23	-12.84	-0.33
81	SLU 29	-246	31	4820	-19.29	-11.34	-0.23
81	SLU 30	-287	46	5024	-41.09	-12.81	-0.33
81	SLU 31	-340	58	5616	-56.65	-14.96	-0.41
81	SLU 32	-277	34	5368	-20.73	-12.73	-0.25
81	SLU 33	-317	49	5573	-42.53	-14.2	-0.35
81	SLU 34	-344	59	5677	-56.92	-15.15	-0.41
81	SLU 35	-281	34	5429	-21	-12.92	-0.25
81	SLU 36	-321	49	5633	-42.8	-14.39	-0.35
81	SLU 37	-280	34	5396	-20.86	-12.89	-0.25
81	SLU 38	-321	49	5601	-42.66	-14.36	-0.35
81	SLU 39	-287	34	5522	-21	-13.17	-0.25
81	SLU 40	-327	49	5727	-42.79	-14.64	-0.35
81	SLU 41	-291	35	5582	-21.27	-13.36	-0.25
81	SLU 42	-331	50	5787	-43.06	-14.83	-0.35
81	SLU 43	-270	34	5269	-21.84	-12.38	-0.25
81	SLU 44	-337	59	5610	-58.17	-14.84	-0.41
81	SLU 45	-274	35	5362	-22.25	-12.6	-0.25
81	SLU 46	-315	50	5567	-44.05	-14.08	-0.35
81	SLU 47	-341	60	5671	-58.44	-15.03	-0.42
81	SLU 48	-278	35	5423	-22.52	-12.8	-0.26
81	SLU 49	-319	50	5628	-44.32	-14.27	-0.36
81	SLU 50	-278	35	5390	-22.38	-12.77	-0.25
81	SLU 51	-318	50	5595	-44.18	-14.24	-0.35
81	SLU 52	-371	62	6187	-59.75	-16.39	-0.44
81	SLU 53	-308	38	5939	-23.82	-14.15	-0.28
81	SLU 54	-349	53	6143	-45.62	-15.63	-0.38
81	SLU 55	-375	63	6247	-60.02	-16.58	-0.44
81	SLU 56	-312	39	5999	-24.09	-14.34	-0.28
81	SLU 57	-353	54	6204	-45.89	-15.82	-0.38

Nodo	Cont.	Reazione a traslazione			Reazione a rotazione		
Ind.	N.br.	x	y	z	x	y	z
81	SLU 58	-312	38	5966	-23.96	-14.31	-0.28
81	SLU 59	-352	53	6171	-45.75	-15.79	-0.38
81	SLU 60	-318	39	6092	-24.09	-14.59	-0.28
81	SLU 61	-359	54	6297	-45.89	-16.07	-0.38
81	SLU 62	-322	39	6153	-24.36	-14.79	-0.28
81	SLU 63	-363	54	6357	-46.16	-16.26	-0.38
81	SLU 64	-294	37	5780	-23.38	-13.52	-0.27
81	SLU 65	-361	62	6121	-59.71	-15.97	-0.44
81	SLU 66	-298	38	5873	-23.79	-13.74	-0.28
81	SLU 67	-339	53	6078	-45.59	-15.21	-0.37
81	SLU 68	-365	63	6182	-59.98	-16.16	-0.44
81	SLU 69	-302	38	5934	-24.06	-13.93	-0.28
81	SLU 70	-343	53	6139	-45.86	-15.4	-0.38
81	SLU 71	-302	38	5901	-23.92	-13.9	-0.28
81	SLU 72	-342	53	6106	-45.72	-15.37	-0.38
81	SLU 73	-395	65	6697	-61.29	-17.52	-0.46
81	SLU 74	-332	41	6449	-25.37	-15.29	-0.3
81	SLU 75	-373	56	6654	-47.16	-16.76	-0.4
81	SLU 76	-400	66	6758	-61.56	-17.71	-0.46
81	SLU 77	-336	41	6510	-25.64	-15.48	-0.3
81	SLU 78	-377	57	6715	-47.43	-16.95	-0.4
81	SLU 79	-336	41	6477	-25.5	-15.45	-0.3
81	SLU 80	-377	56	6682	-47.29	-16.92	-0.4
81	SLU 81	-342	42	6603	-25.63	-15.73	-0.3
81	SLU 82	-383	57	6808	-47.43	-17.2	-0.4
81	SLU 83	-347	42	6663	-25.9	-15.92	-0.31
81	SLU 84	-387	57	6868	-47.7	-17.39	-0.41
81	SLE RA 1	-221	28	4334	-17.65	-10.15	-0.2
81	SLE RA 2	-266	45	4561	-41.87	-11.79	-0.31
81	SLE RA 3	-224	28	4396	-17.92	-10.3	-0.21
81	SLE RA 4	-251	38	4533	-32.45	-11.28	-0.27
81	SLE RA 5	-268	45	4602	-42.05	-11.91	-0.32
81	SLE RA 6	-226	29	4436	-18.1	-10.42	-0.21
81	SLE RA 7	-253	39	4573	-32.63	-11.41	-0.28
81	SLE RA 8	-226	29	4414	-18.01	-10.4	-0.21
81	SLE RA 9	-253	39	4551	-32.54	-11.39	-0.27
81	SLE RA 10	-288	47	4945	-42.92	-12.82	-0.33
81	SLE RA 11	-246	30	4780	-18.97	-11.33	-0.22
81	SLE RA 12	-273	41	4917	-33.5	-12.31	-0.29
81	SLE RA 13	-291	47	4986	-43.1	-12.94	-0.33
81	SLE RA 14	-249	31	4820	-19.15	-11.46	-0.22
81	SLE RA 15	-276	41	4957	-33.68	-12.44	-0.29
81	SLE RA 16	-249	31	4799	-19.06	-11.44	-0.22
81	SLE RA 17	-276	41	4935	-33.59	-12.42	-0.29
81	SLE RA 18	-253	31	4883	-19.15	-11.62	-0.22
81	SLE RA 19	-280	41	5019	-33.68	-12.6	-0.29
81	SLE RA 20	-256	31	4923	-19.33	-11.75	-0.23
81	SLE RA 21	-283	41	5059	-33.86	-12.73	-0.29
81	SLE FR 1	-221	28	4334	-17.65	-10.15	-0.2
81	SLE FR 2	-230	31	4379	-22.49	-10.48	-0.22
81	SLE FR 3	-222	28	4350	-17.72	-10.2	-0.2
81	SLE FR 4	-239	32	4544	-22.94	-10.92	-0.23
81	SLE FR 5	-231	29	4515	-18.17	-10.64	-0.21
81	SLE FR 6	-237	29	4608	-18.4	-10.89	-0.21
81	SLE QP 1	-221	28	4334	-17.65	-10.15	-0.2
81	SLE QP 2	-230	29	4498	-18.1	-10.59	-0.21
81	SLD 1	746	30	4093	-19.74	31.73	-0.21
81	SLD 2	746	30	4093	-19.74	31.73	-0.21
81	SLD 3	875	7	3635	8	36.91	-0.05
81	SLD 4	875	7	3635	8	36.91	-0.05
81	SLD 5	-132	64	5072	-60.65	-5.74	-0.44
81	SLD 6	-132	64	5072	-60.65	-5.74	-0.44
81	SLD 7	296	-13	3545	31.79	11.5	0.07
81	SLD 8	296	-13	3545	31.79	11.5	0.07
81	SLD 9	-757	70	5452	-67.99	-32.68	-0.49
81	SLD 10	-757	70	5452	-67.99	-32.68	-0.49
81	SLD 11	-328	-6	3925	24.45	-15.45	0.03
81	SLD 12	-328	-6	3925	24.45	-15.45	0.03
81	SLD 13	-1336	51	5362	-44.19	-58.09	-0.36
81	SLD 14	-1336	51	5362	-44.19	-58.09	-0.36
81	SLD 15	-1207	28	4904	-16.46	-52.92	-0.21
81	SLD 16	-1207	28	4904	-16.46	-52.92	-0.21
81	SLV 1	1980	31	3566	-23.05	85.26	-0.21
81	SLV 2	1980	31	3566	-23.05	85.26	-0.21
81	SLV 3	2300	-26	2486	47.37	98.11	0.17
81	SLV 4	2300	-26	2486	47.37	98.11	0.17
81	SLV 5	-54	117	5857	-126.39	-1.33	-0.8
81	SLV 6	-54	117	5857	-126.39	-1.33	-0.8
81	SLV 7	1015	-76	2257	108.35	41.52	0.5
81	SLV 8	1015	-76	2257	108.35	41.52	0.5
81	SLV 9	-1476	133	6740	-144.55	-62.7	-0.91
81	SLV 10	-1476	133	6740	-144.55	-62.7	-0.91
81	SLV 11	-407	-60	3140	90.2	-19.85	0.38
81	SLV 12	-407	-60	3140	90.2	-19.85	0.38
81	SLV 13	-2761	84	6511	-83.56	-119.3	-0.59
81	SLV 14	-2761	84	6511	-83.56	-119.3	-0.59
81	SLV 15	-2441	26	5431	-13.14	-106.44	-0.2
81	SLV 16	-2441	26	5431	-13.14	-106.44	-0.2
82	SLU 1	-138	25	4086	-17.46	-4.73	-0.2
82	SLU 2	-246	53	4347	-56.79	-9.15	-0.41
82	SLU 3	-140	26	4178	-17.88	-4.77	-0.21

Nodo	Cont.	Reazione a traslazione			Reazione a rotazione		
Ind.	N.br.	x	y	z	x	y	z
82	SLU 4	-204	43	4335	-41.48	-7.43	-0.33
82	SLU 5	-248	54	4407	-57.06	-9.23	-0.41
82	SLU 6	-142	26	4238	-18.16	-4.85	-0.21
82	SLU 7	-207	43	4394	-41.75	-7.51	-0.33
82	SLU 8	-142	26	4205	-18.01	-4.89	-0.21
82	SLU 9	-207	43	4362	-41.61	-7.54	-0.33
82	SLU 10	-272	56	4906	-58.31	-10.11	-0.43
82	SLU 11	-166	28	4737	-19.4	-5.73	-0.23
82	SLU 12	-231	45	4894	-42.99	-8.39	-0.35
82	SLU 13	-275	56	4965	-58.58	-10.19	-0.43
82	SLU 14	-168	29	4796	-19.67	-5.81	-0.23
82	SLU 15	-233	46	4953	-43.27	-8.47	-0.36
82	SLU 16	-169	29	4764	-19.53	-5.85	-0.23
82	SLU 17	-234	45	4920	-43.12	-8.5	-0.35
82	SLU 18	-176	29	4884	-19.63	-6.1	-0.23
82	SLU 19	-240	46	5041	-43.22	-8.75	-0.36
82	SLU 20	-178	29	4944	-19.9	-6.18	-0.24
82	SLU 21	-243	46	5100	-43.5	-8.83	-0.36
82	SLU 22	-154	28	4583	-18.97	-5.27	-0.22
82	SLU 23	-262	56	4844	-58.29	-9.7	-0.43
82	SLU 24	-156	28	4675	-19.39	-5.32	-0.23
82	SLU 25	-221	45	4832	-42.98	-7.98	-0.35
82	SLU 26	-265	56	4904	-58.57	-9.78	-0.43
82	SLU 27	-158	29	4735	-19.66	-5.4	-0.23
82	SLU 28	-223	46	4891	-43.26	-8.06	-0.35
82	SLU 29	-159	28	4702	-19.52	-5.43	-0.23
82	SLU 30	-224	45	4859	-43.11	-8.09	-0.35
82	SLU 31	-289	58	5403	-59.81	-10.66	-0.45
82	SLU 32	-182	31	5234	-20.9	-6.28	-0.25
82	SLU 33	-247	48	5390	-44.5	-8.94	-0.37
82	SLU 34	-291	59	5462	-60.08	-10.74	-0.45
82	SLU 35	-185	31	5293	-21.18	-6.36	-0.25
82	SLU 36	-250	48	5450	-44.77	-9.02	-0.38
82	SLU 37	-185	31	5261	-21.03	-6.39	-0.25
82	SLU 38	-250	48	5417	-44.63	-9.05	-0.38
82	SLU 39	-192	31	5381	-21.13	-6.64	-0.26
82	SLU 40	-257	48	5538	-44.73	-9.3	-0.38
82	SLU 41	-194	32	5440	-21.41	-6.72	-0.26
82	SLU 42	-259	49	5597	-45	-9.38	-0.38
82	SLU 43	-173	32	5142	-22.19	-5.96	-0.25
82	SLU 44	-282	60	5403	-61.51	-10.38	-0.46
82	SLU 45	-175	32	5234	-22.61	-6	-0.26
82	SLU 46	-240	49	5391	-46.2	-8.66	-0.38
82	SLU 47	-284	60	5462	-61.79	-10.46	-0.46
82	SLU 48	-178	33	5293	-22.88	-6.08	-0.26
82	SLU 49	-242	50	5450	-46.48	-8.74	-0.39
82	SLU 50	-178	32	5261	-22.74	-6.12	-0.26
82	SLU 51	-243	49	5417	-46.33	-8.77	-0.38
82	SLU 52	-308	62	5961	-63.03	-11.34	-0.48
82	SLU 53	-202	35	5792	-24.12	-6.96	-0.28
82	SLU 54	-267	52	5949	-47.72	-9.62	-0.4
82	SLU 55	-310	63	6021	-63.3	-11.42	-0.48
82	SLU 56	-204	35	5852	-24.4	-7.04	-0.29
82	SLU 57	-269	52	6009	-47.99	-9.7	-0.41
82	SLU 58	-205	35	5819	-24.25	-7.08	-0.28
82	SLU 59	-269	52	5976	-47.85	-9.73	-0.41
82	SLU 60	-211	35	5940	-24.35	-7.33	-0.29
82	SLU 61	-276	52	6096	-47.95	-9.98	-0.41
82	SLU 62	-214	36	5999	-24.63	-7.41	-0.29
82	SLU 63	-278	53	6156	-48.22	-10.06	-0.41
82	SLU 64	-190	34	5639	-23.69	-6.5	-0.28
82	SLU 65	-298	62	5900	-63.02	-10.93	-0.48
82	SLU 66	-192	35	5731	-24.11	-6.55	-0.28
82	SLU 67	-256	52	5887	-47.71	-9.21	-0.4
82	SLU 68	-300	63	5959	-63.29	-11.01	-0.48
82	SLU 69	-194	35	5790	-24.38	-6.63	-0.29
82	SLU 70	-259	52	5947	-47.98	-9.29	-0.41
82	SLU 71	-194	35	5758	-24.24	-6.66	-0.28
82	SLU 72	-259	52	5914	-47.83	-9.32	-0.41
82	SLU 73	-324	65	6458	-64.53	-11.89	-0.5
82	SLU 74	-218	38	6289	-25.62	-7.51	-0.3
82	SLU 75	-283	54	6446	-49.22	-10.17	-0.43
82	SLU 76	-327	65	6518	-64.81	-11.97	-0.51
82	SLU 77	-220	38	6349	-25.9	-7.59	-0.31
82	SLU 78	-285	55	6505	-49.49	-10.25	-0.43
82	SLU 79	-221	38	6316	-25.75	-7.62	-0.31
82	SLU 80	-286	55	6473	-49.35	-10.28	-0.43
82	SLU 81	-228	38	6436	-25.86	-7.87	-0.31
82	SLU 82	-292	55	6593	-49.45	-10.53	-0.43
82	SLU 83	-230	38	6496	-26.13	-7.95	-0.31
82	SLU 84	-295	55	6653	-49.73	-10.61	-0.43
82	SLE RA 1	-142	26	4228	-17.89	-4.88	-0.21
82	SLE RA 2	-214	44	4402	-44.11	-7.83	-0.34
82	SLE RA 3	-144	26	4290	-18.17	-4.92	-0.21
82	SLE RA 4	-187	37	4394	-33.9	-6.69	-0.29
82	SLE RA 5	-216	45	4442	-44.29	-7.89	-0.35
82	SLE RA 6	-145	26	4329	-18.36	-4.97	-0.21
82	SLE RA 7	-188	38	4434	-34.09	-6.74	-0.3
82	SLE RA 8	-146	26	4307	-18.26	-4.99	-0.21
82	SLE RA 9	-189	38	4412	-33.99	-6.76	-0.29
82	SLE RA 10	-232	46	4775	-45.12	-8.47	-0.36

Nodo	Cont.	Reazione a traslazione			Reazione a rotazione		
Ind.	N.br.	x	y	z	x	y	z
82	SLE RA 11	-161	28	4662	-19.18	-5.55	-0.23
82	SLE RA 12	-204	39	4766	-34.91	-7.32	-0.31
82	SLE RA 13	-234	47	4814	-45.3	-8.53	-0.36
82	SLE RA 14	-163	28	4702	-19.37	-5.61	-0.23
82	SLE RA 15	-206	39	4806	-35.1	-7.38	-0.31
82	SLE RA 16	-163	28	4680	-19.27	-5.63	-0.23
82	SLE RA 17	-206	39	4784	-35	-7.4	-0.31
82	SLE RA 18	-168	28	4760	-19.34	-5.8	-0.23
82	SLE RA 19	-211	40	4865	-35.07	-7.57	-0.31
82	SLE RA 20	-169	29	4800	-19.52	-5.85	-0.23
82	SLE RA 21	-212	40	4904	-35.25	-7.62	-0.31
82	SLE FR 1	-142	26	4228	-17.89	-4.88	-0.21
82	SLE FR 2	-157	29	4263	-23.14	-5.47	-0.24
82	SLE FR 3	-143	26	4244	-17.97	-4.9	-0.21
82	SLE FR 4	-164	30	4423	-23.57	-5.75	-0.24
82	SLE FR 5	-151	27	4404	-18.4	-5.18	-0.22
82	SLE FR 6	-155	27	4494	-18.62	-5.34	-0.22
82	SLE QP 1	-142	26	4228	-17.89	-4.88	-0.21
82	SLE QP 2	-150	26	4388	-18.33	-5.16	-0.21
82	SLD 1	871	27	3927	-19.39	39.56	-0.22
82	SLD 2	871	27	3927	-19.39	39.56	-0.22
82	SLD 3	988	2	3482	10.73	44.4	-0.03
82	SLD 4	988	2	3482	10.73	44.4	-0.03
82	SLD 5	-21	65	4924	-64.32	0.91	-0.5
82	SLD 6	-21	65	4924	-64.32	0.91	-0.5
82	SLD 7	369	-19	3441	36.06	17.06	0.12
82	SLD 8	369	-19	3441	36.06	17.06	0.12
82	SLD 9	-669	72	5334	-72.72	-27.37	-0.55
82	SLD 10	-669	72	5334	-72.72	-27.37	-0.55
82	SLD 11	-279	-12	3851	27.67	-11.22	0.07
82	SLD 12	-279	-12	3851	27.67	-11.22	0.07
82	SLD 13	-1288	51	5294	-47.38	-54.72	-0.4
82	SLD 14	-1288	51	5294	-47.38	-54.72	-0.4
82	SLD 15	-1171	26	4849	-17.26	-49.87	-0.21
82	SLD 16	-1171	26	4849	-17.26	-49.87	-0.21
82	SLV 1	2162	28	3328	-22.2	96.12	-0.23
82	SLV 2	2162	28	3328	-22.2	96.12	-0.23
82	SLV 3	2454	-35	2277	54.4	108.24	0.24
82	SLV 4	2454	-35	2277	54.4	108.24	0.24
82	SLV 5	100	123	5664	-135.65	6.85	-0.93
82	SLV 6	100	123	5664	-135.65	6.85	-0.93
82	SLV 7	1074	-88	2160	119.66	47.24	0.63
82	SLV 8	1074	-88	2160	119.66	47.24	0.63
82	SLV 9	-1374	141	6615	-156.31	-57.55	-1.06
82	SLV 10	-1374	141	6615	-156.31	-57.55	-1.06
82	SLV 11	-400	-71	3112	99	-17.17	0.5
82	SLV 12	-400	-71	3112	99	-17.17	0.5
82	SLV 13	-2754	88	6499	-91.05	-118.55	-0.67
82	SLV 14	-2754	88	6499	-91.05	-118.55	-0.67
82	SLV 15	-2462	24	5448	-14.46	-106.44	-0.2
82	SLV 16	-2462	24	5448	-14.46	-106.44	-0.2
83	SLU 1	-32	24	4108	-18.15	-2.59	-0.19
83	SLU 2	-163	53	4301	-58.47	-7.78	-0.41
83	SLU 3	-31	24	4203	-18.6	-2.57	-0.19
83	SLU 4	-109	42	4319	-42.79	-5.68	-0.33
83	SLU 5	-163	54	4362	-58.76	-7.81	-0.41
83	SLU 6	-31	25	4264	-18.89	-2.6	-0.2
83	SLU 7	-109	42	4379	-43.08	-5.72	-0.33
83	SLU 8	-32	24	4230	-18.73	-2.66	-0.2
83	SLU 9	-111	42	4346	-42.92	-5.77	-0.33
83	SLU 10	-176	56	4859	-60.03	-8.45	-0.43
83	SLU 11	-43	27	4761	-20.16	-3.24	-0.21
83	SLU 12	-122	44	4877	-44.35	-6.35	-0.35
83	SLU 13	-176	56	4920	-60.32	-8.49	-0.43
83	SLU 14	-43	27	4822	-20.45	-3.28	-0.22
83	SLU 15	-122	45	4937	-44.64	-6.39	-0.35
83	SLU 16	-45	27	4788	-20.29	-3.33	-0.22
83	SLU 17	-124	45	4903	-44.48	-6.45	-0.35
83	SLU 18	-50	27	4905	-20.38	-3.55	-0.22
83	SLU 19	-129	45	5021	-44.57	-6.66	-0.35
83	SLU 20	-50	27	4966	-20.67	-3.58	-0.22
83	SLU 21	-129	45	5082	-44.86	-6.7	-0.35
83	SLU 22	-35	26	4607	-19.71	-2.87	-0.21
83	SLU 23	-166	56	4800	-60.03	-8.06	-0.43
83	SLU 24	-34	27	4702	-20.16	-2.85	-0.21
83	SLU 25	-112	44	4818	-44.35	-5.96	-0.35
83	SLU 26	-167	56	4861	-60.32	-8.1	-0.43
83	SLU 27	-34	27	4763	-20.45	-2.88	-0.22
83	SLU 28	-113	45	4878	-44.64	-6	-0.35
83	SLU 29	-36	27	4729	-20.3	-2.94	-0.22
83	SLU 30	-114	45	4845	-44.49	-6.06	-0.35
83	SLU 31	-179	58	5358	-61.59	-8.73	-0.45
83	SLU 32	-46	29	5260	-21.73	-3.52	-0.23
83	SLU 33	-125	47	5375	-45.91	-6.63	-0.37
83	SLU 34	-179	59	5419	-61.88	-8.77	-0.45
83	SLU 35	-47	29	5320	-22.02	-3.56	-0.24
83	SLU 36	-125	47	5436	-46.21	-6.67	-0.37
83	SLU 37	-48	29	5287	-21.86	-3.61	-0.24
83	SLU 38	-127	47	5402	-46.05	-6.73	-0.37
83	SLU 39	-53	29	5404	-21.95	-3.83	-0.24
83	SLU 40	-132	47	5520	-46.14	-6.94	-0.37

Nodo	Cont.	Reazione a traslazione			Reazione a rotazione		
Ind.	N.br.	x	y	z	x	y	z
83	SLU 41	-54	30	5465	-22.24	-3.87	-0.24
83	SLU 42	-132	48	5581	-46.43	-6.98	-0.37
83	SLU 43	-41	30	5170	-23.06	-3.27	-0.24
83	SLU 44	-172	60	5363	-63.37	-8.46	-0.46
83	SLU 45	-39	31	5264	-23.51	-3.25	-0.25
83	SLU 46	-118	48	5380	-47.7	-6.36	-0.38
83	SLU 47	-172	60	5423	-63.67	-8.49	-0.46
83	SLU 48	-39	31	5325	-23.8	-3.28	-0.25
83	SLU 49	-118	49	5441	-47.99	-6.4	-0.38
83	SLU 50	-41	31	5291	-23.64	-3.34	-0.25
83	SLU 51	-120	49	5407	-47.83	-6.45	-0.38
83	SLU 52	-184	62	5920	-64.94	-9.13	-0.48
83	SLU 53	-52	33	5822	-25.07	-3.92	-0.27
83	SLU 54	-130	51	5938	-49.26	-7.03	-0.4
83	SLU 55	-184	62	5981	-65.23	-9.17	-0.48
83	SLU 56	-52	33	5883	-25.36	-3.96	-0.27
83	SLU 57	-130	51	5999	-49.55	-7.07	-0.4
83	SLU 58	-54	33	5849	-25.2	-4.01	-0.27
83	SLU 59	-132	51	5965	-49.39	-7.13	-0.4
83	SLU 60	-59	33	5967	-25.29	-4.23	-0.27
83	SLU 61	-137	51	6082	-49.48	-7.34	-0.4
83	SLU 62	-59	34	6027	-25.58	-4.26	-0.27
83	SLU 63	-137	52	6143	-49.77	-7.38	-0.4
83	SLU 64	-44	32	5669	-24.62	-3.55	-0.26
83	SLU 65	-175	62	5862	-64.94	-8.74	-0.48
83	SLU 66	-42	33	5763	-25.07	-3.53	-0.26
83	SLU 67	-121	51	5879	-49.26	-6.64	-0.4
83	SLU 68	-175	62	5922	-65.23	-8.78	-0.48
83	SLU 69	-43	33	5824	-25.36	-3.56	-0.27
83	SLU 70	-121	51	5940	-49.55	-6.68	-0.4
83	SLU 71	-44	33	5790	-25.2	-3.62	-0.27
83	SLU 72	-123	51	5906	-49.39	-6.74	-0.4
83	SLU 73	-188	64	6419	-66.5	-9.41	-0.5
83	SLU 74	-55	35	6321	-26.63	-4.2	-0.28
83	SLU 75	-134	53	6437	-50.82	-7.31	-0.42
83	SLU 76	-188	65	6480	-66.79	-9.45	-0.5
83	SLU 77	-55	36	6382	-26.92	-4.24	-0.29
83	SLU 78	-134	54	6498	-51.11	-7.35	-0.42
83	SLU 79	-57	36	6348	-26.77	-4.29	-0.29
83	SLU 80	-135	53	6464	-50.96	-7.41	-0.42
83	SLU 81	-62	36	6465	-26.86	-4.51	-0.29
83	SLU 82	-141	54	6581	-51.04	-7.62	-0.42
83	SLU 83	-62	36	6526	-27.15	-4.55	-0.29
83	SLU 84	-141	54	6642	-51.34	-7.66	-0.42
83	SLE RA 1	-33	24	4251	-18.6	-2.67	-0.2
83	SLE RA 2	-120	44	4379	-45.47	-6.13	-0.34
83	SLE RA 3	-32	25	4314	-18.9	-2.65	-0.2
83	SLE RA 4	-84	37	4391	-35.02	-4.73	-0.29
83	SLE RA 5	-121	44	4420	-45.67	-6.15	-0.34
83	SLE RA 6	-32	25	4354	-19.09	-2.68	-0.2
83	SLE RA 7	-85	37	4432	-35.22	-4.75	-0.29
83	SLE RA 8	-33	25	4332	-18.98	-2.72	-0.2
83	SLE RA 9	-86	37	4409	-35.11	-4.79	-0.29
83	SLE RA 10	-129	46	4751	-46.52	-6.58	-0.35
83	SLE RA 11	-40	26	4686	-19.94	-3.1	-0.21
83	SLE RA 12	-93	38	4763	-36.06	-5.18	-0.3
83	SLE RA 13	-129	46	4792	-46.71	-6.6	-0.36
83	SLE RA 14	-41	27	4726	-20.13	-3.13	-0.21
83	SLE RA 15	-93	38	4804	-36.26	-5.2	-0.3
83	SLE RA 16	-42	26	4704	-20.03	-3.17	-0.21
83	SLE RA 17	-94	38	4781	-36.15	-5.24	-0.3
83	SLE RA 18	-45	27	4782	-20.09	-3.31	-0.21
83	SLE RA 19	-98	38	4859	-36.21	-5.38	-0.3
83	SLE RA 20	-45	27	4823	-20.28	-3.33	-0.22
83	SLE RA 21	-98	39	4900	-36.41	-5.41	-0.3
83	SLE FR 1	-33	24	4251	-18.6	-2.67	-0.2
83	SLE FR 2	-51	28	4277	-23.97	-3.36	-0.22
83	SLE FR 3	-33	24	4267	-18.67	-2.68	-0.2
83	SLE FR 4	-54	29	4436	-24.42	-3.55	-0.23
83	SLE FR 5	-37	25	4426	-19.12	-2.87	-0.2
83	SLE FR 6	-39	25	4516	-19.34	-2.99	-0.2
83	SLE QP 1	-33	24	4251	-18.6	-2.67	-0.2
83	SLE QP 2	-37	25	4410	-19.04	-2.86	-0.2
83	SLD 1	988	24	3929	-18.83	40.98	-0.19
83	SLD 2	988	24	3929	-18.83	40.98	-0.19
83	SLD 3	1090	-2	3479	12.17	45.26	0.01
83	SLD 4	1090	-2	3479	12.17	45.26	0.01
83	SLD 5	115	64	4948	-66.01	3.8	-0.49
83	SLD 6	115	64	4948	-66.01	3.8	-0.49
83	SLD 7	457	-23	3448	37.35	18.07	0.16
83	SLD 8	457	-23	3448	37.35	18.07	0.16
83	SLD 9	-530	72	5372	-75.44	-23.79	-0.56
83	SLD 10	-530	72	5372	-75.44	-23.79	-0.56
83	SLD 11	-189	-14	3872	27.92	-9.52	0.09
83	SLD 12	-189	-14	3872	27.92	-9.52	0.09
83	SLD 13	-1164	52	5341	-50.26	-50.98	-0.41
83	SLD 14	-1164	52	5341	-50.26	-50.98	-0.41
83	SLD 15	-1061	26	4892	-19.25	-46.7	-0.21
83	SLD 16	-1061	26	4892	-19.25	-46.7	-0.21
83	SLV 1	2285	24	3302	-20.18	96.5	-0.18
83	SLV 2	2285	24	3302	-20.18	96.5	-0.18

Nodo	Cont.	Reazione a traslazione			Reazione a rotazione		
Ind.	N.br.	x	y	z	x	y	z
83	SLV 3	2541	-42	2237	58.74	107.16	0.31
83	SLV 4	2541	-42	2237	58.74	107.16	0.31
83	SLV 5	272	125	5692	-139.09	10.78	-0.94
83	SLV 6	272	125	5692	-139.09	10.78	-0.94
83	SLV 7	1125	-95	2143	123.99	46.32	0.7
83	SLV 8	1125	-95	2143	123.99	46.32	0.7
83	SLV 9	-1198	145	6677	-162.08	-52.04	-1.1
83	SLV 10	-1198	145	6677	-162.08	-52.04	-1.1
83	SLV 11	-345	-75	3128	101	-16.5	0.54
83	SLV 12	-345	-75	3128	101	-16.5	0.54
83	SLV 13	-2615	92	6583	-96.83	-112.88	-0.71
83	SLV 14	-2615	92	6583	-96.83	-112.88	-0.71
83	SLV 15	-2359	26	5519	-17.9	-102.22	-0.22
83	SLV 16	-2359	26	5519	-17.9	-102.22	-0.22
84	SLU 1	138	25	4320	-19.88	5.01	-0.17
84	SLU 2	-10	54	4473	-59.02	-1.46	-0.36
84	SLU 3	145	26	4423	-20.4	5.28	-0.18
84	SLU 4	56	43	4515	-43.88	1.4	-0.29
84	SLU 5	-7	55	4539	-59.35	-1.34	-0.36
84	SLU 6	149	26	4488	-20.73	5.41	-0.18
84	SLU 7	60	44	4580	-44.22	1.53	-0.29
84	SLU 8	145	26	4451	-20.55	5.27	-0.18
84	SLU 9	56	43	4543	-44.03	1.38	-0.29
84	SLU 10	2	57	5058	-60.82	-1.12	-0.38
84	SLU 11	157	28	5008	-22.2	5.62	-0.19
84	SLU 12	68	46	5100	-45.68	1.74	-0.31
84	SLU 13	5	57	5124	-61.16	-1	-0.38
84	SLU 14	160	29	5073	-22.53	5.75	-0.2
84	SLU 15	71	46	5165	-46.02	1.87	-0.31
84	SLU 16	156	28	5036	-22.35	5.61	-0.19
84	SLU 17	67	46	5128	-45.83	1.72	-0.31
84	SLU 18	155	29	5156	-22.45	5.5	-0.2
84	SLU 19	66	46	5248	-45.94	1.61	-0.31
84	SLU 20	158	29	5221	-22.79	5.62	-0.2
84	SLU 21	69	47	5313	-46.27	1.74	-0.31
84	SLU 22	157	27	4847	-21.68	5.7	-0.19
84	SLU 23	9	57	5000	-60.83	-0.78	-0.38
84	SLU 24	164	28	4949	-22.2	5.97	-0.19
84	SLU 25	76	46	5041	-45.69	2.08	-0.31
84	SLU 26	13	57	5066	-61.16	-0.65	-0.38
84	SLU 27	168	29	5015	-22.53	6.1	-0.2
84	SLU 28	79	46	5107	-46.02	2.21	-0.31
84	SLU 29	164	28	4978	-22.35	5.95	-0.19
84	SLU 30	75	46	5070	-45.84	2.06	-0.31
84	SLU 31	21	59	5585	-62.63	-0.44	-0.4
84	SLU 32	176	31	5534	-24	6.31	-0.21
84	SLU 33	87	48	5626	-47.49	2.42	-0.33
84	SLU 34	24	60	5651	-62.96	-0.31	-0.4
84	SLU 35	179	31	5600	-24.34	6.44	-0.21
84	SLU 36	90	49	5692	-47.82	2.55	-0.33
84	SLU 37	176	31	5563	-24.15	6.29	-0.21
84	SLU 38	87	49	5655	-47.64	2.4	-0.33
84	SLU 39	174	31	5682	-24.26	6.18	-0.21
84	SLU 40	85	49	5774	-47.74	2.3	-0.33
84	SLU 41	177	32	5748	-24.59	6.31	-0.22
84	SLU 42	88	49	5840	-48.08	2.42	-0.33
84	SLU 43	173	31	5435	-25.22	6.28	-0.22
84	SLU 44	25	61	5589	-64.37	-0.2	-0.41
84	SLU 45	180	32	5538	-25.74	6.55	-0.22
84	SLU 46	91	50	5630	-49.23	2.67	-0.33
84	SLU 47	28	61	5655	-64.7	-0.07	-0.41
84	SLU 48	183	33	5604	-26.08	6.68	-0.22
84	SLU 49	94	50	5696	-49.56	2.79	-0.34
84	SLU 50	180	32	5567	-25.89	6.53	-0.22
84	SLU 51	91	50	5659	-49.38	2.65	-0.34
84	SLU 52	36	63	6174	-66.17	0.14	-0.42
84	SLU 53	192	35	6123	-27.54	6.89	-0.24
84	SLU 54	103	52	6215	-51.03	3.01	-0.35
84	SLU 55	40	64	6239	-66.5	0.27	-0.43
84	SLU 56	195	35	6189	-27.88	7.02	-0.24
84	SLU 57	106	53	6281	-51.36	3.13	-0.36
84	SLU 58	191	35	6152	-27.69	6.87	-0.24
84	SLU 59	102	53	6244	-51.18	2.99	-0.35
84	SLU 60	189	35	6271	-27.8	6.77	-0.24
84	SLU 61	101	53	6363	-51.28	2.88	-0.36
84	SLU 62	193	36	6337	-28.13	6.89	-0.24
84	SLU 63	104	53	6429	-51.62	3.01	-0.36
84	SLU 64	192	34	5962	-27.03	6.97	-0.23
84	SLU 65	44	63	6116	-66.17	0.49	-0.42
84	SLU 66	199	35	6065	-27.55	7.24	-0.24
84	SLU 67	110	52	6157	-51.03	3.35	-0.35
84	SLU 68	47	64	6181	-66.5	0.62	-0.43
84	SLU 69	203	35	6130	-27.88	7.36	-0.24
84	SLU 70	114	53	6222	-51.36	3.48	-0.36
84	SLU 71	199	35	6093	-27.69	7.22	-0.24
84	SLU 72	110	53	6185	-51.18	3.33	-0.35
84	SLU 73	56	66	6700	-67.97	0.83	-0.44
84	SLU 74	211	37	6650	-29.35	7.58	-0.26
84	SLU 75	122	55	6742	-52.83	3.69	-0.37
84	SLU 76	59	66	6766	-68.31	0.96	-0.44
84	SLU 77	214	38	6715	-29.68	7.7	-0.26

Nodo	Cont.	Reazione a traslazione			Reazione a rotazione		
Ind.	N.br.	x	y	z	x	y	z
84	SLU 78	125	55	6807	-53.17	3.82	-0.37
84	SLU 79	210	38	6678	-29.5	7.56	-0.26
84	SLU 80	122	55	6770	-52.98	3.67	-0.37
84	SLU 81	209	38	6798	-29.6	7.45	-0.26
84	SLU 82	120	55	6890	-53.09	3.57	-0.37
84	SLU 83	212	38	6863	-29.94	7.58	-0.26
84	SLU 84	123	56	6955	-53.42	3.69	-0.38
84	SLE RA 1	144	26	4470	-20.39	5.21	-0.18
84	SLE RA 2	45	45	4573	-46.49	0.89	-0.3
84	SLE RA 3	148	26	4539	-20.74	5.39	-0.18
84	SLE RA 4	89	38	4600	-36.4	2.8	-0.25
84	SLE RA 5	47	46	4617	-46.71	0.97	-0.3
84	SLE RA 6	151	26	4583	-20.96	5.47	-0.18
84	SLE RA 7	91	38	4644	-36.62	2.88	-0.26
84	SLE RA 8	148	26	4558	-20.84	5.38	-0.18
84	SLE RA 9	89	38	4619	-36.5	2.79	-0.26
84	SLE RA 10	53	47	4963	-47.69	1.12	-0.31
84	SLE RA 11	156	28	4929	-21.94	5.62	-0.19
84	SLE RA 12	97	40	4990	-37.6	3.03	-0.27
84	SLE RA 13	55	47	5006	-47.91	1.2	-0.32
84	SLE RA 14	158	28	4973	-22.16	5.7	-0.19
84	SLE RA 15	99	40	5034	-37.82	3.11	-0.27
84	SLE RA 16	156	28	4948	-22.04	5.6	-0.19
84	SLE RA 17	97	40	5009	-37.7	3.01	-0.27
84	SLE RA 18	155	28	5028	-22.11	5.53	-0.19
84	SLE RA 19	95	40	5089	-37.77	2.94	-0.27
84	SLE RA 20	157	28	5071	-22.33	5.62	-0.19
84	SLE RA 21	98	40	5133	-37.99	3.03	-0.27
84	SLE FR 1	144	26	4470	-20.39	5.21	-0.18
84	SLE FR 2	124	30	4491	-25.61	4.34	-0.2
84	SLE FR 3	145	26	4488	-20.48	5.24	-0.18
84	SLE FR 4	127	30	4658	-26.13	4.44	-0.21
84	SLE FR 5	148	26	4655	-21	5.34	-0.18
84	SLE FR 6	149	27	4749	-21.25	5.37	-0.18
84	SLE QP 1	144	26	4470	-20.39	5.21	-0.18
84	SLE QP 2	147	26	4638	-20.91	5.3	-0.18
84	SLD 1	1148	23	4114	-18.75	48.74	-0.15
84	SLD 2	1148	23	4114	-18.75	48.74	-0.15
84	SLD 3	1238	-3	3646	11.6	52.69	0.02
84	SLD 4	1238	-3	3646	11.6	52.69	0.02
84	SLD 5	310	64	5189	-66.3	12.35	-0.43
84	SLD 6	310	64	5189	-66.3	12.35	-0.43
84	SLD 7	611	-21	3631	34.88	25.51	0.13
84	SLD 8	611	-21	3631	34.88	25.51	0.13
84	SLD 9	-317	74	5644	-76.7	-14.9	-0.49
84	SLD 10	-317	74	5644	-76.7	-14.9	-0.49
84	SLD 11	-16	-11	4086	24.48	-1.74	0.06
84	SLD 12	-16	-11	4086	24.48	-1.74	0.06
84	SLD 13	-944	56	5629	-53.42	-42.08	-0.38
84	SLD 14	-944	56	5629	-53.42	-42.08	-0.38
84	SLD 15	-854	30	5161	-23.07	-38.13	-0.21
84	SLD 16	-854	30	5161	-23.07	-38.13	-0.21
84	SLV 1	2416	19	3428	-17.68	103.73	-0.12
84	SLV 2	2416	19	3428	-17.68	103.73	-0.12
84	SLV 3	2641	-46	2323	59.58	113.58	0.31
84	SLV 4	2641	-46	2323	59.58	113.58	0.31
84	SLV 5	487	123	5951	-137.12	19.88	-0.81
84	SLV 6	487	123	5951	-137.12	19.88	-0.81
84	SLV 7	1236	-94	2267	120.42	52.74	0.61
84	SLV 8	1236	-94	2267	120.42	52.74	0.61
84	SLV 9	-942	147	7008	-162.23	-42.13	-0.97
84	SLV 10	-942	147	7008	-162.23	-42.13	-0.97
84	SLV 11	-193	-70	3324	95.3	-9.27	0.45
84	SLV 12	-193	-70	3324	95.3	-9.27	0.45
84	SLV 13	-2347	99	6952	-101.4	-102.97	-0.67
84	SLV 14	-2347	99	6952	-101.4	-102.97	-0.67
84	SLV 15	-2122	34	5847	-24.14	-93.12	-0.25
84	SLV 16	-2122	34	5847	-24.14	-93.12	-0.25
85	SLU 1	254	29	4740	-22.6	7.1	-0.16
85	SLU 2	100	56	4894	-58.38	0.42	-0.31
85	SLU 3	265	30	4857	-23.22	7.43	-0.17
85	SLU 4	173	46	4949	-44.69	3.43	-0.26
85	SLU 5	106	56	4968	-58.78	0.59	-0.31
85	SLU 6	271	30	4931	-23.62	7.6	-0.17
85	SLU 7	178	46	5024	-45.09	3.59	-0.26
85	SLU 8	266	30	4889	-23.4	7.44	-0.17
85	SLU 9	173	46	4981	-44.86	3.43	-0.26
85	SLU 10	130	59	5539	-60.6	1.19	-0.33
85	SLU 11	295	33	5501	-25.45	8.2	-0.18
85	SLU 12	202	49	5594	-46.92	4.19	-0.27
85	SLU 13	136	60	5613	-61	1.35	-0.33
85	SLU 14	301	33	5576	-25.85	8.37	-0.19
85	SLU 15	208	50	5668	-47.32	4.36	-0.28
85	SLU 16	296	33	5533	-25.63	8.2	-0.19
85	SLU 17	203	49	5626	-47.09	4.19	-0.28
85	SLU 18	297	33	5661	-25.78	8.2	-0.19
85	SLU 19	204	50	5753	-47.25	4.19	-0.28
85	SLU 20	303	34	5735	-26.18	8.36	-0.19
85	SLU 21	210	50	5828	-47.65	4.35	-0.28
85	SLU 22	290	32	5324	-24.82	8.14	-0.18
85	SLU 23	136	59	5478	-60.59	1.46	-0.33

Nodo	Cont.	Reazione a traslazione			Reazione a rotazione		
Ind.	N.br.	x	y	z	x	y	z
85	SLU 24	301	33	5441	-25.44	8.47	-0.18
85	SLU 25	208	49	5533	-46.91	4.46	-0.27
85	SLU 26	142	60	5552	-60.99	1.62	-0.33
85	SLU 27	306	33	5515	-25.84	8.64	-0.19
85	SLU 28	214	50	5607	-47.31	4.63	-0.28
85	SLU 29	302	33	5473	-25.62	8.47	-0.19
85	SLU 30	209	49	5565	-47.08	4.46	-0.28
85	SLU 31	166	62	6122	-62.82	2.22	-0.35
85	SLU 32	331	36	6085	-27.67	9.23	-0.2
85	SLU 33	238	52	6177	-49.14	5.23	-0.29
85	SLU 34	171	63	6197	-63.22	2.39	-0.35
85	SLU 35	336	37	6159	-28.07	9.4	-0.21
85	SLU 36	244	53	6252	-49.54	5.39	-0.29
85	SLU 37	331	36	6117	-27.84	9.24	-0.2
85	SLU 38	239	52	6210	-49.31	5.23	-0.29
85	SLU 39	333	37	6245	-28	9.23	-0.21
85	SLU 40	240	53	6337	-49.47	5.22	-0.29
85	SLU 41	338	37	6319	-28.4	9.4	-0.21
85	SLU 42	246	53	6411	-49.87	5.39	-0.3
85	SLU 43	319	36	5962	-28.62	8.88	-0.2
85	SLU 44	164	63	6116	-64.4	2.2	-0.35
85	SLU 45	329	37	6079	-29.24	9.21	-0.21
85	SLU 46	237	53	6171	-50.71	5.2	-0.3
85	SLU 47	170	64	6190	-64.8	2.37	-0.36
85	SLU 48	335	38	6153	-29.64	9.38	-0.21
85	SLU 49	242	54	6245	-51.11	5.37	-0.3
85	SLU 50	330	38	6111	-29.42	9.21	-0.21
85	SLU 51	237	54	6203	-50.88	5.21	-0.3
85	SLU 52	194	67	6761	-66.62	2.97	-0.37
85	SLU 53	359	40	6723	-31.47	9.98	-0.23
85	SLU 54	266	57	6816	-52.94	5.97	-0.32
85	SLU 55	200	67	6835	-67.02	3.13	-0.37
85	SLU 56	365	41	6798	-31.87	10.14	-0.23
85	SLU 57	272	57	6890	-53.34	6.13	-0.32
85	SLU 58	360	41	6755	-31.64	9.98	-0.23
85	SLU 59	267	57	6848	-53.11	5.97	-0.32
85	SLU 60	361	41	6883	-31.8	9.97	-0.23
85	SLU 61	269	57	6975	-53.27	5.97	-0.32
85	SLU 62	367	42	6957	-32.2	10.14	-0.23
85	SLU 63	274	58	7050	-53.67	6.13	-0.32
85	SLU 64	354	40	6546	-30.84	9.92	-0.22
85	SLU 65	200	67	6700	-66.61	3.24	-0.37
85	SLU 66	365	40	6663	-31.46	10.25	-0.23
85	SLU 67	272	57	6755	-52.93	6.24	-0.32
85	SLU 68	206	67	6774	-67.01	3.4	-0.37
85	SLU 69	371	41	6737	-31.86	10.41	-0.23
85	SLU 70	278	57	6829	-53.33	6.4	-0.32
85	SLU 71	366	41	6695	-31.63	10.25	-0.23
85	SLU 72	273	57	6787	-53.1	6.24	-0.32
85	SLU 73	230	70	7344	-68.84	4	-0.39
85	SLU 74	395	44	7307	-33.69	11.01	-0.24
85	SLU 75	302	60	7399	-55.16	7	-0.33
85	SLU 76	235	70	7419	-69.24	4.17	-0.39
85	SLU 77	400	44	7381	-34.09	11.18	-0.25
85	SLU 78	308	60	7474	-55.56	7.17	-0.34
85	SLU 79	395	44	7339	-33.86	11.01	-0.25
85	SLU 80	303	60	7431	-55.33	7	-0.34
85	SLU 81	397	44	7467	-34.02	11.01	-0.25
85	SLU 82	304	60	7559	-55.49	7	-0.34
85	SLU 83	403	45	7541	-34.42	11.17	-0.25
85	SLU 84	310	61	7633	-55.89	7.17	-0.34
85	SLE RA 1	265	30	4907	-23.23	7.4	-0.17
85	SLE RA 2	162	48	5010	-47.08	2.95	-0.27
85	SLE RA 3	272	30	4985	-23.65	7.62	-0.17
85	SLE RA 4	210	41	5046	-37.96	4.95	-0.23
85	SLE RA 5	166	48	5059	-47.35	3.06	-0.27
85	SLE RA 6	276	31	5034	-23.92	7.73	-0.17
85	SLE RA 7	214	41	5096	-38.23	5.06	-0.23
85	SLE RA 8	272	30	5006	-23.77	7.62	-0.17
85	SLE RA 9	211	41	5068	-38.08	4.95	-0.23
85	SLE RA 10	182	50	5439	-48.57	3.46	-0.28
85	SLE RA 11	292	32	5414	-25.13	8.13	-0.18
85	SLE RA 12	230	43	5476	-39.45	5.46	-0.24
85	SLE RA 13	185	50	5489	-48.84	3.57	-0.28
85	SLE RA 14	295	33	5464	-25.4	8.24	-0.18
85	SLE RA 15	234	44	5526	-39.71	5.57	-0.24
85	SLE RA 16	292	33	5436	-25.25	8.13	-0.18
85	SLE RA 17	230	43	5497	-39.56	5.46	-0.24
85	SLE RA 18	293	33	5521	-25.35	8.13	-0.18
85	SLE RA 19	231	44	5582	-39.67	5.46	-0.24
85	SLE RA 20	297	33	5570	-25.62	8.24	-0.19
85	SLE RA 21	235	44	5632	-39.93	5.57	-0.25
85	SLE FR 1	265	30	4907	-23.23	7.4	-0.17
85	SLE FR 2	244	33	4928	-28	6.51	-0.19
85	SLE FR 3	266	30	4927	-23.34	7.44	-0.17
85	SLE FR 4	253	34	5112	-28.64	6.73	-0.19
85	SLE FR 5	275	31	5111	-23.98	7.66	-0.17
85	SLE FR 6	279	31	5214	-24.29	7.76	-0.18
85	SLE QP 1	265	30	4907	-23.23	7.4	-0.17
85	SLE QP 2	273	31	5091	-23.87	7.62	-0.17
85	SLD 1	1196	24	4452	-19.36	47.51	-0.14

Nodo	Cont.	Reazione a traslazione			Reazione a rotazione		
Ind.	N.br.	x	y	z	x	y	z
85	SLD 2	1196	24	4452	-19.36	47.51	-0.14
85	SLD 3	1275	-1	3955	8.82	51	-0.01
85	SLD 4	1275	-1	3955	8.82	51	-0.01
85	SLD 5	431	65	5653	-65.26	14.3	-0.37
85	SLD 6	431	65	5653	-65.26	14.3	-0.37
85	SLD 7	693	-15	3996	28.68	25.92	0.08
85	SLD 8	693	-15	3996	28.68	25.92	0.08
85	SLD 9	-146	77	6186	-76.42	-10.68	-0.43
85	SLD 10	-146	77	6186	-76.42	-10.68	-0.43
85	SLD 11	115	-4	4529	17.52	0.93	0.02
85	SLD 12	115	-4	4529	17.52	0.93	0.02
85	SLD 13	-728	62	6227	-56.56	-35.76	-0.34
85	SLD 14	-728	62	6227	-56.56	-35.76	-0.34
85	SLD 15	-650	38	5730	-28.38	-32.28	-0.2
85	SLD 16	-650	38	5730	-28.38	-32.28	-0.2
85	SLV 1	2366	16	3609	-15.19	98.03	-0.11
85	SLV 2	2366	16	3609	-15.19	98.03	-0.11
85	SLV 3	2560	-45	2439	56.48	106.68	0.23
85	SLV 4	2560	-45	2439	56.48	106.68	0.23
85	SLV 5	606	119	6421	-129.96	21.62	-0.67
85	SLV 6	606	119	6421	-129.96	21.62	-0.67
85	SLV 7	1254	-85	2521	108.94	50.46	0.47
85	SLV 8	1254	-85	2521	108.94	50.46	0.47
85	SLV 9	-708	146	7662	-156.67	-35.23	-0.81
85	SLV 10	-708	146	7662	-156.67	-35.23	-0.81
85	SLV 11	-60	-58	3761	82.22	-6.38	0.32
85	SLV 12	-60	-58	3761	82.22	-6.38	0.32
85	SLV 13	-2014	107	7743	-104.22	-91.44	-0.58
85	SLV 14	-2014	107	7743	-104.22	-91.44	-0.58
85	SLV 15	-1819	46	6573	-32.55	-82.79	-0.24
85	SLV 16	-1819	46	6573	-32.55	-82.79	-0.24
86	SLU 1	320	34	5341	-25.6	11.46	-0.18
86	SLU 2	152	56	5532	-55.94	3.75	-0.31
86	SLU 3	333	35	5477	-26.35	11.96	-0.19
86	SLU 4	232	48	5591	-44.55	7.33	-0.26
86	SLU 5	159	57	5618	-56.41	4.03	-0.31
86	SLU 6	340	35	5563	-26.82	12.24	-0.19
86	SLU 7	240	49	5678	-45.02	7.61	-0.27
86	SLU 8	335	35	5514	-26.55	12.02	-0.19
86	SLU 9	234	49	5628	-44.75	7.39	-0.26
86	SLU 10	191	60	6264	-58.68	5.06	-0.33
86	SLU 11	372	38	6209	-29.08	13.27	-0.21
86	SLU 12	271	52	6323	-47.29	8.64	-0.28
86	SLU 13	199	61	6350	-59.15	5.33	-0.33
86	SLU 14	380	39	6295	-29.56	13.55	-0.21
86	SLU 15	279	53	6410	-47.76	8.92	-0.29
86	SLU 16	374	39	6246	-29.29	13.33	-0.21
86	SLU 17	273	52	6360	-47.49	8.7	-0.29
86	SLU 18	376	39	6386	-29.51	13.33	-0.21
86	SLU 19	275	53	6501	-47.71	8.7	-0.29
86	SLU 20	384	40	6473	-29.98	13.61	-0.22
86	SLU 21	283	54	6588	-48.19	8.98	-0.29
86	SLU 22	364	37	6007	-28.31	13.03	-0.2
86	SLU 23	196	60	6198	-58.65	5.32	-0.33
86	SLU 24	377	38	6143	-29.05	13.53	-0.21
86	SLU 25	277	52	6257	-47.26	8.9	-0.28
86	SLU 26	204	61	6284	-59.12	5.6	-0.33
86	SLU 27	385	39	6229	-29.53	13.81	-0.21
86	SLU 28	284	53	6344	-47.73	9.18	-0.29
86	SLU 29	379	39	6180	-29.26	13.59	-0.21
86	SLU 30	278	52	6294	-47.46	8.96	-0.29
86	SLU 31	236	64	6930	-61.38	6.62	-0.35
86	SLU 32	417	42	6875	-31.79	14.83	-0.23
86	SLU 33	316	56	6989	-49.99	10.21	-0.3
86	SLU 34	243	65	7016	-61.86	6.9	-0.35
86	SLU 35	424	43	6961	-32.26	15.11	-0.23
86	SLU 36	323	57	7076	-50.47	10.49	-0.31
86	SLU 37	419	43	6912	-31.99	14.89	-0.23
86	SLU 38	318	56	7026	-50.2	10.27	-0.31
86	SLU 39	421	43	7052	-32.21	14.89	-0.23
86	SLU 40	320	57	7167	-50.42	10.27	-0.31
86	SLU 41	428	44	7139	-32.69	15.17	-0.24
86	SLU 42	327	57	7254	-50.89	10.55	-0.31
86	SLU 43	400	42	6714	-32.35	14.36	-0.23
86	SLU 44	232	65	6905	-62.69	6.65	-0.35
86	SLU 45	414	43	6850	-33.1	14.86	-0.24
86	SLU 46	313	57	6965	-51.3	10.24	-0.31
86	SLU 47	240	66	6992	-63.17	6.93	-0.36
86	SLU 48	421	44	6937	-33.57	15.14	-0.24
86	SLU 49	320	58	7052	-51.78	10.51	-0.31
86	SLU 50	415	44	6888	-33.3	14.92	-0.24
86	SLU 51	315	57	7002	-51.51	10.29	-0.31
86	SLU 52	272	69	7637	-65.43	7.96	-0.38
86	SLU 53	453	47	7582	-35.83	16.17	-0.26
86	SLU 54	352	61	7697	-54.04	11.54	-0.33
86	SLU 55	279	70	7724	-65.9	8.24	-0.38
86	SLU 56	460	48	7669	-36.31	16.45	-0.26
86	SLU 57	360	62	7784	-54.51	11.82	-0.34
86	SLU 58	455	47	7620	-36.04	16.23	-0.26
86	SLU 59	354	61	7734	-54.24	11.6	-0.33
86	SLU 60	457	48	7760	-36.26	16.23	-0.26

Nodo	Cont.	Reazione a traslazione			Reazione a rotazione		
Ind.	N.br.	x	y	z	x	y	z
86	SLU 61	356	62	7875	-54.46	11.6	-0.34
86	SLU 62	464	48	7847	-36.74	16.51	-0.26
86	SLU 63	363	62	7961	-54.94	11.88	-0.34
86	SLU 64	445	46	7380	-35.06	15.93	-0.25
86	SLU 65	277	69	7571	-65.4	8.22	-0.38
86	SLU 66	458	47	7516	-35.81	16.43	-0.26
86	SLU 67	357	61	7631	-54.01	11.8	-0.33
86	SLU 68	284	70	7658	-65.87	8.5	-0.38
86	SLU 69	466	48	7603	-36.28	16.71	-0.26
86	SLU 70	365	62	7718	-54.48	12.08	-0.33
86	SLU 71	460	47	7554	-36.01	16.49	-0.26
86	SLU 72	359	61	7668	-54.21	11.86	-0.33
86	SLU 73	316	73	8303	-68.13	9.52	-0.4
86	SLU 74	497	51	8249	-38.54	17.73	-0.28
86	SLU 75	397	65	8363	-56.74	13.11	-0.35
86	SLU 76	324	74	8390	-68.61	9.8	-0.4
86	SLU 77	505	52	8335	-39.02	18.01	-0.28
86	SLU 78	404	65	8450	-57.22	13.39	-0.36
86	SLU 79	499	51	8286	-38.74	17.79	-0.28
86	SLU 80	398	65	8400	-56.95	13.17	-0.35
86	SLU 81	501	52	8426	-38.97	17.8	-0.28
86	SLU 82	400	65	8541	-57.17	13.17	-0.36
86	SLU 83	509	52	8513	-39.44	18.07	-0.28
86	SLU 84	408	66	8627	-57.64	13.45	-0.36
86	SLE RA 1	332	35	5531	-26.37	11.91	-0.19
86	SLE RA 2	220	50	5658	-46.6	6.77	-0.27
86	SLE RA 3	341	35	5622	-26.87	12.24	-0.19
86	SLE RA 4	274	44	5698	-39.01	9.16	-0.24
86	SLE RA 5	225	50	5716	-46.92	6.95	-0.27
86	SLE RA 6	346	36	5679	-27.19	12.43	-0.19
86	SLE RA 7	279	45	5756	-39.32	9.34	-0.24
86	SLE RA 8	342	35	5646	-27.01	12.28	-0.19
86	SLE RA 9	275	45	5723	-39.14	9.2	-0.24
86	SLE RA 10	247	53	6146	-48.42	7.64	-0.29
86	SLE RA 11	368	38	6110	-28.69	13.11	-0.21
86	SLE RA 12	300	47	6186	-40.83	10.03	-0.26
86	SLE RA 13	252	53	6204	-48.74	7.82	-0.29
86	SLE RA 14	372	38	6167	-29.01	13.3	-0.21
86	SLE RA 15	305	48	6244	-41.15	10.21	-0.26
86	SLE RA 16	369	38	6134	-28.83	13.15	-0.21
86	SLE RA 17	301	47	6211	-40.97	10.07	-0.26
86	SLE RA 18	370	38	6228	-28.98	13.15	-0.21
86	SLE RA 19	303	48	6304	-41.11	10.07	-0.26
86	SLE RA 20	375	39	6286	-29.3	13.34	-0.21
86	SLE RA 21	308	48	6362	-41.43	10.25	-0.26
86	SLE FR 1	332	35	5531	-26.37	11.91	-0.19
86	SLE FR 2	310	38	5556	-30.42	10.88	-0.2
86	SLE FR 3	334	35	5554	-26.5	11.98	-0.19
86	SLE FR 4	321	39	5765	-31.2	11.25	-0.21
86	SLE FR 5	346	36	5763	-27.28	12.36	-0.2
86	SLE FR 6	351	36	5879	-27.68	12.53	-0.2
86	SLE QP 1	332	35	5531	-26.37	11.91	-0.19
86	SLE QP 2	344	36	5740	-27.16	12.28	-0.19
86	SLD 1	1252	25	4879	-20.3	49.26	-0.15
86	SLD 2	1252	25	4879	-20.3	49.26	-0.15
86	SLD 3	1180	4	4333	4.29	52.54	-0.03
86	SLD 4	1180	4	4333	4.29	52.54	-0.03
86	SLD 5	725	65	6309	-62.39	18.4	-0.36
86	SLD 6	725	65	6309	-62.39	18.4	-0.36
86	SLD 7	486	-6	4490	19.57	29.34	0.03
86	SLD 8	486	-6	4490	19.57	29.34	0.03
86	SLD 9	202	78	6990	-73.88	-4.77	-0.42
86	SLD 10	202	78	6990	-73.88	-4.77	-0.42
86	SLD 11	-37	6	5171	8.08	6.16	-0.03
86	SLD 12	-37	6	5171	8.08	6.16	-0.03
86	SLD 13	-493	68	7147	-58.6	-27.98	-0.36
86	SLD 14	-493	68	7147	-58.6	-27.98	-0.36
86	SLD 15	-564	46	6601	-34.01	-24.7	-0.24
86	SLD 16	-564	46	6601	-34.01	-24.7	-0.24
86	SLV 1	2416	12	3741	-12.88	96.03	-0.09
86	SLV 2	2416	12	3741	-12.88	96.03	-0.09
86	SLV 3	2239	-42	2462	49.53	104.2	0.21
86	SLV 4	2239	-42	2462	49.53	104.2	0.21
86	SLV 5	1234	111	7080	-117.52	25.01	-0.61
86	SLV 6	1234	111	7080	-117.52	25.01	-0.61
86	SLV 7	644	-70	2816	90.5	52.26	0.38
86	SLV 8	644	-70	2816	90.5	52.26	0.38
86	SLV 9	43	141	8664	-144.81	-27.69	-0.77
86	SLV 10	43	141	8664	-144.81	-27.69	-0.77
86	SLV 11	-546	-40	4400	63.21	-0.44	0.23
86	SLV 12	-546	-40	4400	63.21	-0.44	0.23
86	SLV 13	-1552	113	9018	-103.84	-79.64	-0.59
86	SLV 14	-1552	113	9018	-103.84	-79.64	-0.59
86	SLV 15	-1729	59	7739	-41.43	-71.46	-0.3
86	SLV 16	-1729	59	7739	-41.43	-71.46	-0.3
87	SLU 1	227	37	6032	-28.03	4.27	-0.23
87	SLU 2	52	54	6292	-51.02	-3.5	-0.34
87	SLU 3	238	38	6190	-28.88	4.54	-0.24
87	SLU 4	133	48	6346	-42.68	-0.12	-0.3
87	SLU 5	58	55	6393	-51.57	-3.36	-0.34
87	SLU 6	244	38	6291	-29.42	4.68	-0.25

Nodo	Cont.	Reazione a traslazione			Reazione a rotazione		
Ind.	N.br.	x	y	z	x	y	z
87	SLU 7	139	49	6447	-43.22	0.02	-0.31
87	SLU 8	239	38	6233	-29.11	4.54	-0.24
87	SLU 9	134	49	6389	-42.91	-0.12	-0.31
87	SLU 10	80	59	7127	-54.22	-3.06	-0.37
87	SLU 11	266	42	7025	-32.08	4.98	-0.27
87	SLU 12	161	53	7181	-45.88	0.32	-0.33
87	SLU 13	86	59	7228	-54.76	-2.92	-0.37
87	SLU 14	272	43	7126	-32.62	5.12	-0.27
87	SLU 15	166	53	7282	-46.42	0.46	-0.34
87	SLU 16	267	42	7068	-32.31	4.98	-0.27
87	SLU 17	162	53	7224	-46.11	0.32	-0.33
87	SLU 18	267	43	7224	-32.59	4.9	-0.27
87	SLU 19	162	53	7381	-46.39	0.23	-0.34
87	SLU 20	273	44	7325	-33.14	5.03	-0.28
87	SLU 21	168	54	7481	-46.93	0.37	-0.34
87	SLU 22	261	41	6794	-31.18	4.97	-0.26
87	SLU 23	85	58	7054	-54.17	-2.8	-0.37
87	SLU 24	271	42	6952	-32.03	5.24	-0.27
87	SLU 25	166	53	7108	-45.83	0.58	-0.33
87	SLU 26	91	59	7155	-54.72	-2.66	-0.37
87	SLU 27	277	43	7052	-32.57	5.38	-0.27
87	SLU 28	172	53	7209	-46.37	0.72	-0.34
87	SLU 29	273	42	6995	-32.26	5.25	-0.27
87	SLU 30	167	53	7151	-46.06	0.58	-0.33
87	SLU 31	113	63	7889	-57.37	-2.36	-0.39
87	SLU 32	299	46	7786	-35.23	5.68	-0.3
87	SLU 33	194	57	7943	-49.03	1.02	-0.36
87	SLU 34	119	64	7989	-57.91	-2.22	-0.4
87	SLU 35	305	47	7887	-35.77	5.82	-0.3
87	SLU 36	200	58	8043	-49.57	1.16	-0.36
87	SLU 37	300	47	7830	-35.46	5.69	-0.3
87	SLU 38	195	57	7986	-49.26	1.02	-0.36
87	SLU 39	300	47	7986	-35.74	5.6	-0.3
87	SLU 40	195	58	8142	-49.54	0.94	-0.36
87	SLU 41	306	48	8087	-36.29	5.74	-0.31
87	SLU 42	201	58	8243	-50.08	1.07	-0.37
87	SLU 43	284	46	7581	-35.36	5.31	-0.29
87	SLU 44	109	64	7841	-58.35	-2.46	-0.4
87	SLU 45	295	47	7739	-36.21	5.58	-0.3
87	SLU 46	190	58	7895	-50.01	0.92	-0.36
87	SLU 47	115	64	7941	-58.89	-2.32	-0.4
87	SLU 48	301	48	7839	-36.75	5.72	-0.31
87	SLU 49	196	58	7995	-50.55	1.06	-0.37
87	SLU 50	296	47	7782	-36.44	5.58	-0.3
87	SLU 51	191	58	7938	-50.24	0.92	-0.37
87	SLU 52	137	68	8675	-61.55	-2.02	-0.43
87	SLU 53	323	52	8573	-39.41	6.02	-0.33
87	SLU 54	217	62	8730	-53.2	1.36	-0.39
87	SLU 55	143	69	8776	-62.09	-1.88	-0.43
87	SLU 56	329	52	8674	-39.95	6.16	-0.33
87	SLU 57	223	63	8830	-53.75	1.5	-0.4
87	SLU 58	324	52	8617	-39.64	6.02	-0.33
87	SLU 59	219	62	8773	-53.43	1.36	-0.39
87	SLU 60	324	52	8773	-39.92	5.94	-0.33
87	SLU 61	219	63	8929	-53.72	1.27	-0.4
87	SLU 62	330	53	8874	-40.47	6.07	-0.34
87	SLU 63	225	64	9030	-54.26	1.41	-0.4
87	SLU 64	317	50	8342	-38.51	6.01	-0.32
87	SLU 65	142	68	8602	-61.5	-1.76	-0.43
87	SLU 66	328	51	8500	-39.36	6.28	-0.33
87	SLU 67	223	62	8656	-53.16	1.62	-0.39
87	SLU 68	148	69	8703	-62.04	-1.62	-0.43
87	SLU 69	334	52	8601	-39.9	6.42	-0.33
87	SLU 70	229	63	8757	-53.7	1.76	-0.4
87	SLU 71	329	52	8543	-39.59	6.29	-0.33
87	SLU 72	224	62	8700	-53.39	1.62	-0.39
87	SLU 73	170	72	9437	-64.7	-1.32	-0.45
87	SLU 74	356	56	9335	-42.56	6.72	-0.36
87	SLU 75	250	66	9491	-56.35	2.06	-0.42
87	SLU 76	176	73	9538	-65.24	-1.18	-0.46
87	SLU 77	362	57	9436	-43.1	6.86	-0.36
87	SLU 78	256	67	9592	-56.9	2.2	-0.42
87	SLU 79	357	56	9378	-42.79	6.73	-0.36
87	SLU 80	252	67	9534	-56.58	2.06	-0.42
87	SLU 81	357	57	9535	-43.07	6.64	-0.36
87	SLU 82	252	67	9691	-56.87	1.98	-0.42
87	SLU 83	363	57	9635	-43.61	6.78	-0.37
87	SLU 84	258	68	9791	-57.41	2.11	-0.43
87	SLE RA 1	237	38	6250	-28.93	4.47	-0.24
87	SLE RA 2	120	50	6423	-44.26	-0.71	-0.31
87	SLE RA 3	244	39	6355	-29.5	4.65	-0.25
87	SLE RA 4	174	46	6459	-38.7	1.54	-0.29
87	SLE RA 5	124	50	6490	-44.62	-0.62	-0.31
87	SLE RA 6	248	39	6422	-29.86	4.74	-0.25
87	SLE RA 7	178	46	6526	-39.06	1.63	-0.29
87	SLE RA 8	245	39	6384	-29.65	4.65	-0.25
87	SLE RA 9	175	46	6488	-38.85	1.54	-0.29
87	SLE RA 10	138	52	6980	-46.39	-0.42	-0.33
87	SLE RA 11	263	41	6912	-31.63	4.94	-0.27
87	SLE RA 12	192	49	7016	-40.83	1.83	-0.31
87	SLE RA 13	142	53	7047	-46.75	-0.33	-0.33

Nodo	Cont.	Reazione a traslazione			Reazione a rotazione		
Ind.	N.br.	x	y	z	x	y	z
87	SLE RA 14	266	42	6979	-31.99	5.03	-0.27
87	SLE RA 15	196	49	7083	-41.19	1.93	-0.31
87	SLE RA 16	263	42	6940	-31.78	4.95	-0.27
87	SLE RA 17	193	49	7044	-40.98	1.84	-0.31
87	SLE RA 18	263	42	7045	-31.97	4.89	-0.27
87	SLE RA 19	193	49	7149	-41.17	1.78	-0.31
87	SLE RA 20	267	42	7112	-32.33	4.98	-0.27
87	SLE RA 21	197	49	7216	-41.53	1.87	-0.31
87	SLE FR 1	237	38	6250	-28.93	4.47	-0.24
87	SLE FR 2	213	40	6284	-31.99	3.43	-0.26
87	SLE FR 3	239	38	6276	-29.07	4.5	-0.24
87	SLE FR 4	221	41	6523	-32.91	3.56	-0.26
87	SLE FR 5	246	39	6515	-29.99	4.63	-0.25
87	SLE FR 6	250	40	6647	-30.45	4.68	-0.25
87	SLE QP 1	237	38	6250	-28.93	4.47	-0.24
87	SLE QP 2	245	39	6488	-29.84	4.59	-0.25
87	SLD 1	990	26	5302	-21.19	37.87	-0.17
87	SLD 2	990	26	5302	-21.19	37.87	-0.17
87	SLD 3	1053	8	4683	-1.47	40.69	-0.06
87	SLD 4	1053	8	4683	-1.47	40.69	-0.06
87	SLD 5	373	62	7072	-57.15	10.3	-0.39
87	SLD 6	373	62	7072	-57.15	10.3	-0.39
87	SLD 7	583	2	5006	8.58	19.7	-0.03
87	SLD 8	583	2	5006	8.58	19.7	-0.03
87	SLD 9	-93	76	7970	-68.26	-10.51	-0.47
87	SLD 10	-93	76	7970	-68.26	-10.51	-0.47
87	SLD 11	117	16	5904	-2.53	-1.11	-0.11
87	SLD 12	117	16	5904	-2.53	-1.11	-0.11
87	SLD 13	-563	70	8294	-58.21	-31.5	-0.44
87	SLD 14	-563	70	8294	-58.21	-31.5	-0.44
87	SLD 15	-500	52	7674	-38.49	-28.68	-0.33
87	SLD 16	-500	52	7674	-38.49	-28.68	-0.33
87	SLV 1	1932	10	3740	-11.09	79.89	-0.08
87	SLV 2	1932	10	3740	-11.09	79.89	-0.08
87	SLV 3	2089	-35	2287	38.77	86.96	0.2
87	SLV 4	2089	-35	2287	38.77	86.96	0.2
87	SLV 5	514	99	7867	-99.83	16.46	-0.62
87	SLV 6	514	99	7867	-99.83	16.46	-0.62
87	SLV 7	1035	-52	3024	66.36	40.03	0.3
87	SLV 8	1035	-52	3024	66.36	40.03	0.3
87	SLV 9	-546	130	9952	-126.04	-30.84	-0.8
87	SLV 10	-546	130	9952	-126.04	-30.84	-0.8
87	SLV 11	-24	-21	5109	40.15	-7.27	0.12
87	SLV 12	-24	-21	5109	40.15	-7.27	0.12
87	SLV 13	-1599	113	10689	-98.45	-77.77	-0.7
87	SLV 14	-1599	113	10689	-98.45	-77.77	-0.7
87	SLV 15	-1443	68	9236	-48.59	-70.7	-0.42
87	SLV 16	-1443	68	9236	-48.59	-70.7	-0.42
88	SLU 1	57	37	6775	-29.53	0.64	-0.34
88	SLU 2	-128	48	7137	-43.23	-8.19	-0.4
88	SLU 3	64	38	6957	-30.47	0.86	-0.35
88	SLU 4	-48	45	7174	-38.69	-4.44	-0.39
88	SLU 5	-125	49	7253	-43.82	-8.08	-0.41
88	SLU 6	67	39	7073	-31.07	0.97	-0.35
88	SLU 7	-45	46	7290	-39.28	-4.33	-0.39
88	SLU 8	64	39	7007	-30.72	0.86	-0.35
88	SLU 9	-47	45	7224	-38.94	-4.43	-0.39
88	SLU 10	-126	53	8082	-46.79	-8.43	-0.44
88	SLU 11	66	43	7902	-34.03	0.62	-0.39
88	SLU 12	-45	50	8120	-42.25	-4.68	-0.43
88	SLU 13	-122	54	8198	-47.38	-8.32	-0.45
88	SLU 14	70	44	8018	-34.62	0.73	-0.4
88	SLU 15	-42	50	8236	-42.84	-4.57	-0.44
88	SLU 16	67	43	7952	-34.28	0.62	-0.39
88	SLU 17	-45	50	8170	-42.5	-4.67	-0.43
88	SLU 18	61	44	8126	-34.61	0.3	-0.4
88	SLU 19	-50	50	8343	-42.83	-5	-0.44
88	SLU 20	65	44	8242	-35.21	0.41	-0.4
88	SLU 21	-47	51	8459	-43.43	-4.89	-0.44
88	SLU 22	67	42	7639	-33.03	0.77	-0.38
88	SLU 23	-118	53	8001	-46.73	-8.06	-0.44
88	SLU 24	74	43	7821	-33.97	0.99	-0.39
88	SLU 25	-38	49	8038	-42.19	-4.31	-0.43
88	SLU 26	-115	53	8117	-47.32	-7.95	-0.45
88	SLU 27	77	43	7937	-34.56	1.1	-0.4
88	SLU 28	-35	50	8154	-42.78	-4.2	-0.43
88	SLU 29	74	43	7871	-34.22	0.99	-0.39
88	SLU 30	-37	50	8088	-42.44	-4.31	-0.43
88	SLU 31	-116	57	8947	-50.28	-8.3	-0.49
88	SLU 32	76	47	8767	-37.53	0.75	-0.43
88	SLU 33	-35	54	8984	-45.74	-4.55	-0.47
88	SLU 34	-112	58	9063	-50.88	-8.19	-0.49
88	SLU 35	80	48	8882	-38.12	0.86	-0.44
88	SLU 36	-32	55	9100	-46.34	-4.44	-0.48
88	SLU 37	77	48	8817	-37.78	0.75	-0.43
88	SLU 38	-35	54	9034	-45.99	-4.54	-0.47
88	SLU 39	71	48	8990	-38.11	0.43	-0.44
88	SLU 40	-40	55	9207	-46.33	-4.87	-0.48
88	SLU 41	75	49	9106	-38.71	0.54	-0.44
88	SLU 42	-37	56	9323	-46.92	-4.76	-0.48
88	SLU 43	71	47	8511	-37.19	0.79	-0.42

Nodo	Cont.	Reazione a traslazione			Reazione a rotazione		
Ind.	N.br.	x	y	z	x	y	z
88	SLU 44	-115	58	8873	-50.89	-8.04	-0.49
88	SLU 45	77	48	8693	-38.13	1.01	-0.43
88	SLU 46	-34	54	8910	-46.35	-4.29	-0.47
88	SLU 47	-111	58	8989	-51.49	-7.93	-0.5
88	SLU 48	81	49	8809	-38.73	1.12	-0.44
88	SLU 49	-31	55	9026	-46.94	-4.18	-0.48
88	SLU 50	78	48	8743	-38.38	1.01	-0.44
88	SLU 51	-34	55	8960	-46.6	-4.29	-0.48
88	SLU 52	-112	62	9819	-54.45	-8.28	-0.53
88	SLU 53	80	52	9638	-41.69	0.77	-0.48
88	SLU 54	-31	59	9856	-49.91	-4.53	-0.52
88	SLU 55	-109	63	9935	-55.04	-8.17	-0.54
88	SLU 56	83	53	9754	-42.28	0.88	-0.48
88	SLU 57	-28	60	9972	-50.5	-4.42	-0.52
88	SLU 58	81	53	9688	-41.94	0.77	-0.48
88	SLU 59	-31	59	9906	-50.16	-4.53	-0.52
88	SLU 60	75	53	9862	-42.27	0.45	-0.48
88	SLU 61	-36	60	10079	-50.49	-4.85	-0.52
88	SLU 62	78	54	9978	-42.87	0.56	-0.49
88	SLU 63	-33	61	10195	-51.09	-4.74	-0.53
88	SLU 64	81	51	9375	-40.69	0.92	-0.46
88	SLU 65	-105	62	9737	-54.39	-7.91	-0.53
88	SLU 66	88	52	9557	-41.63	1.14	-0.48
88	SLU 67	-24	59	9774	-49.85	-4.16	-0.51
88	SLU 68	-101	63	9853	-54.98	-7.8	-0.54
88	SLU 69	91	53	9673	-42.22	1.25	-0.48
88	SLU 70	-21	60	9890	-50.44	-4.05	-0.52
88	SLU 71	88	53	9607	-41.88	1.14	-0.48
88	SLU 72	-24	59	9824	-50.1	-4.16	-0.52
88	SLU 73	-102	67	10683	-57.94	-8.15	-0.57
88	SLU 74	90	57	10503	-45.19	0.9	-0.52
88	SLU 75	-21	64	10720	-53.4	-4.4	-0.56
88	SLU 76	-99	68	10799	-58.54	-8.04	-0.58
88	SLU 77	93	58	10619	-45.78	1.01	-0.52
88	SLU 78	-18	64	10836	-54	-4.29	-0.56
88	SLU 79	91	57	10553	-45.44	0.9	-0.52
88	SLU 80	-21	64	10770	-53.65	-4.4	-0.56
88	SLU 81	85	58	10726	-45.77	0.58	-0.52
88	SLU 82	-26	64	10943	-53.99	-4.72	-0.56
88	SLU 83	88	58	10842	-46.37	0.69	-0.53
88	SLU 84	-23	65	11059	-54.58	-4.61	-0.57
88	SLE RA 1	60	38	7022	-30.53	0.68	-0.35
88	SLE RA 2	-64	46	7263	-39.66	-5.21	-0.39
88	SLE RA 3	64	39	7143	-31.16	0.83	-0.36
88	SLE RA 4	-10	44	7288	-36.64	-2.71	-0.38
88	SLE RA 5	-61	46	7340	-40.06	-5.13	-0.4
88	SLE RA 6	67	40	7220	-31.55	0.9	-0.36
88	SLE RA 7	-8	44	7365	-37.03	-2.63	-0.39
88	SLE RA 8	65	39	7176	-31.32	0.83	-0.36
88	SLE RA 9	-10	44	7321	-36.8	-2.71	-0.38
88	SLE RA 10	-62	49	7893	-42.03	-5.37	-0.42
88	SLE RA 11	66	42	7773	-33.53	0.67	-0.38
88	SLE RA 12	-8	47	7918	-39.01	-2.87	-0.41
88	SLE RA 13	-60	49	7971	-42.43	-5.29	-0.42
88	SLE RA 14	68	43	7851	-33.92	0.74	-0.39
88	SLE RA 15	-6	47	7995	-39.4	-2.79	-0.41
88	SLE RA 16	67	42	7807	-33.7	0.67	-0.39
88	SLE RA 17	-8	47	7952	-39.17	-2.86	-0.41
88	SLE RA 18	63	43	7922	-33.92	0.45	-0.39
88	SLE RA 19	-11	47	8067	-39.4	-3.08	-0.41
88	SLE RA 20	65	43	8000	-34.32	0.53	-0.39
88	SLE RA 21	-9	48	8144	-39.79	-3.01	-0.42
88	SLE FR 1	60	38	7022	-30.53	0.68	-0.35
88	SLE FR 2	36	40	7070	-32.36	-0.5	-0.36
88	SLE FR 3	61	39	7052	-30.69	0.71	-0.35
88	SLE FR 4	36	41	7340	-33.37	-0.57	-0.37
88	SLE FR 5	62	40	7323	-31.71	0.64	-0.36
88	SLE FR 6	62	41	7472	-32.23	0.57	-0.37
88	SLE QP 1	60	38	7022	-30.53	0.68	-0.35
88	SLE QP 2	61	40	7292	-31.55	0.61	-0.36
88	SLD 1	732	26	5667	-21.97	31.31	-0.24
88	SLD 2	732	26	5667	-21.97	31.31	-0.24
88	SLD 3	790	12	4939	-8.25	34.21	-0.14
88	SLD 4	790	12	4939	-8.25	34.21	-0.14
88	SLD 5	175	56	7909	-49.48	5.42	-0.48
88	SLD 6	175	56	7909	-49.48	5.42	-0.48
88	SLD 7	367	11	5482	-3.75	15.09	-0.13
88	SLD 8	367	11	5482	-3.75	15.09	-0.13
88	SLD 9	-245	69	9102	-59.35	-13.87	-0.59
88	SLD 10	-245	69	9102	-59.35	-13.87	-0.59
88	SLD 11	-53	23	6675	-13.61	-4.2	-0.24
88	SLD 12	-53	23	6675	-13.61	-4.2	-0.24
88	SLD 13	-667	67	9645	-54.85	-32.99	-0.58
88	SLD 14	-667	67	9645	-54.85	-32.99	-0.58
88	SLD 15	-610	53	8916	-41.13	-30.09	-0.48
88	SLD 16	-610	53	8916	-41.13	-30.09	-0.48
88	SLV 1	1580	9	3540	-10.16	69.99	-0.09
88	SLV 2	1580	9	3540	-10.16	69.99	-0.09
88	SLV 3	1724	-25	1825	24.2	77.37	0.17
88	SLV 4	1724	-25	1825	24.2	77.37	0.17
88	SLV 5	298	82	8768	-77.25	10.24	-0.67

Nodo	Cont.	Reazione a traslazione			Reazione a rotazione		
Ind.	N.br.	x	y	z	x	y	z
88	SLV 6	298	82	8768	-77.25	10.24	-0.67
88	SLV 7	779	-31	3050	37.29	34.82	0.19
88	SLV 8	779	-31	3050	37.29	34.82	0.19
88	SLV 9	-657	110	11534	-100.39	-33.6	-0.91
88	SLV 10	-657	110	11534	-100.39	-33.6	-0.91
88	SLV 11	-175	-3	5815	14.15	-9.02	-0.05
88	SLV 12	-175	-3	5815	14.15	-9.02	-0.05
88	SLV 13	-1602	104	12759	-87.3	-76.14	-0.89
88	SLV 14	-1602	104	12759	-87.3	-76.14	-0.89
88	SLV 15	-1457	70	11043	-52.94	-68.77	-0.63
88	SLV 16	-1457	70	11043	-52.94	-68.77	-0.63
89	SLU 1	-355	38	7495	-30.43	-24.09	-0.54
89	SLU 2	-536	38	8019	-31.91	-32.99	-0.42
89	SLU 3	-361	39	7700	-31.45	-24.64	-0.56
89	SLU 4	-470	39	8014	-32.33	-29.98	-0.49
89	SLU 5	-541	39	8150	-32.55	-33.37	-0.43
89	SLU 6	-366	40	7831	-32.09	-25.01	-0.57
89	SLU 7	-474	40	8145	-32.97	-30.35	-0.5
89	SLU 8	-364	39	7757	-31.72	-24.84	-0.57
89	SLU 9	-473	40	8071	-32.6	-30.18	-0.49
89	SLU 10	-590	43	9075	-35.77	-36.57	-0.49
89	SLU 11	-416	44	8756	-35.31	-28.22	-0.63
89	SLU 12	-524	44	9070	-36.2	-33.56	-0.56
89	SLU 13	-595	44	9206	-36.41	-36.94	-0.51
89	SLU 14	-420	45	8887	-35.95	-28.59	-0.65
89	SLU 15	-529	45	9201	-36.84	-33.93	-0.57
89	SLU 16	-418	44	8813	-35.58	-28.42	-0.64
89	SLU 17	-527	45	9127	-36.46	-33.76	-0.57
89	SLU 18	-433	45	9004	-35.95	-29.2	-0.65
89	SLU 19	-541	45	9318	-36.84	-34.54	-0.57
89	SLU 20	-437	46	9135	-36.59	-29.58	-0.66
89	SLU 21	-546	46	9449	-37.48	-34.92	-0.58
89	SLU 22	-399	43	8460	-34.23	-27.14	-0.61
89	SLU 23	-580	43	8984	-35.71	-36.04	-0.49
89	SLU 24	-405	44	8665	-35.25	-27.68	-0.63
89	SLU 25	-514	44	8979	-36.13	-33.02	-0.56
89	SLU 26	-584	44	9115	-36.35	-36.41	-0.5
89	SLU 27	-410	45	8795	-35.89	-28.06	-0.64
89	SLU 28	-518	45	9110	-36.77	-33.4	-0.57
89	SLU 29	-408	44	8722	-35.51	-27.88	-0.64
89	SLU 30	-516	45	9036	-36.4	-33.22	-0.56
89	SLU 31	-634	48	10040	-39.57	-39.61	-0.56
89	SLU 32	-460	49	9721	-39.11	-31.26	-0.7
89	SLU 33	-568	49	10035	-39.99	-36.6	-0.63
89	SLU 34	-639	49	10171	-40.21	-39.99	-0.58
89	SLU 35	-464	50	9851	-39.75	-31.63	-0.72
89	SLU 36	-573	50	10166	-40.64	-36.97	-0.64
89	SLU 37	-462	49	9778	-39.38	-31.46	-0.71
89	SLU 38	-571	49	10092	-40.26	-36.8	-0.64
89	SLU 39	-477	50	9969	-39.75	-32.25	-0.72
89	SLU 40	-585	50	10283	-40.64	-37.59	-0.64
89	SLU 41	-481	50	10099	-40.39	-32.62	-0.73
89	SLU 42	-590	51	10414	-41.28	-37.96	-0.66
89	SLU 43	-447	48	9413	-38.26	-30.28	-0.68
89	SLU 44	-628	48	9937	-39.74	-39.18	-0.56
89	SLU 45	-453	49	9618	-39.28	-30.82	-0.7
89	SLU 46	-561	49	9932	-40.16	-36.16	-0.63
89	SLU 47	-632	49	10068	-40.38	-39.55	-0.57
89	SLU 48	-457	50	9748	-39.92	-31.2	-0.71
89	SLU 49	-566	50	10063	-40.8	-36.54	-0.64
89	SLU 50	-456	49	9674	-39.54	-31.03	-0.71
89	SLU 51	-564	49	9989	-40.43	-36.37	-0.63
89	SLU 52	-682	53	10993	-43.6	-42.75	-0.63
89	SLU 53	-507	54	10674	-43.14	-34.4	-0.77
89	SLU 54	-616	54	10988	-44.02	-39.74	-0.7
89	SLU 55	-686	54	11124	-44.24	-43.13	-0.64
89	SLU 56	-512	55	10804	-43.78	-34.77	-0.78
89	SLU 57	-620	55	11119	-44.66	-40.11	-0.71
89	SLU 58	-510	54	10730	-43.41	-34.6	-0.78
89	SLU 59	-619	54	11045	-44.29	-39.94	-0.7
89	SLU 60	-524	55	10922	-43.78	-35.39	-0.78
89	SLU 61	-633	55	11236	-44.67	-40.73	-0.71
89	SLU 62	-529	55	11052	-44.42	-35.76	-0.8
89	SLU 63	-637	56	11367	-45.31	-41.1	-0.72
89	SLU 64	-490	52	10378	-42.06	-33.32	-0.75
89	SLU 65	-671	53	10902	-43.54	-42.22	-0.63
89	SLU 66	-497	54	10582	-43.07	-33.87	-0.77
89	SLU 67	-605	54	10897	-43.96	-39.21	-0.7
89	SLU 68	-676	54	11033	-44.18	-42.59	-0.64
89	SLU 69	-501	54	10713	-43.71	-34.24	-0.78
89	SLU 70	-610	55	11028	-44.6	-39.58	-0.71
89	SLU 71	-499	54	10639	-43.34	-34.07	-0.78
89	SLU 72	-608	54	10954	-44.23	-39.41	-0.7
89	SLU 73	-726	58	11958	-47.4	-45.8	-0.7
89	SLU 74	-551	58	11638	-46.94	-37.44	-0.84
89	SLU 75	-660	59	11953	-47.82	-42.78	-0.77
89	SLU 76	-730	59	12089	-48.04	-46.17	-0.71
89	SLU 77	-556	59	11769	-47.58	-37.82	-0.85
89	SLU 78	-664	60	12084	-48.46	-43.16	-0.78
89	SLU 79	-554	59	11695	-47.2	-37.65	-0.85
89	SLU 80	-662	59	12010	-48.09	-42.99	-0.77

Nodo	Cont.	Reazione a traslazione			Reazione a rotazione		
Ind.	N.br.	x	y	z	x	y	z
89	SLU 81	-568	59	11886	-47.58	-38.43	-0.86
89	SLU 82	-677	60	12201	-48.46	-43.77	-0.78
89	SLU 83	-573	60	12017	-48.22	-38.81	-0.87
89	SLU 84	-681	60	12332	-49.11	-44.15	-0.79
89	SLE RA 1	-368	39	7771	-31.52	-24.96	-0.56
89	SLE RA 2	-488	40	8120	-32.5	-30.9	-0.48
89	SLE RA 3	-372	40	7907	-32.2	-25.33	-0.58
89	SLE RA 4	-444	40	8117	-32.79	-28.89	-0.53
89	SLE RA 5	-491	40	8207	-32.93	-31.14	-0.49
89	SLE RA 6	-375	41	7994	-32.62	-25.58	-0.58
89	SLE RA 7	-447	41	8204	-33.21	-29.13	-0.54
89	SLE RA 8	-374	40	7945	-32.37	-25.46	-0.58
89	SLE RA 9	-446	40	8155	-32.96	-29.02	-0.53
89	SLE RA 10	-525	43	8824	-35.08	-33.28	-0.53
89	SLE RA 11	-408	43	8611	-34.77	-27.71	-0.62
89	SLE RA 12	-480	44	8821	-35.36	-31.27	-0.58
89	SLE RA 13	-528	43	8911	-35.51	-33.53	-0.54
89	SLE RA 14	-411	44	8698	-35.2	-27.96	-0.63
89	SLE RA 15	-483	44	8908	-35.79	-31.52	-0.58
89	SLE RA 16	-410	44	8649	-34.95	-27.85	-0.63
89	SLE RA 17	-482	44	8859	-35.54	-31.41	-0.58
89	SLE RA 18	-419	44	8777	-35.2	-28.37	-0.63
89	SLE RA 19	-492	44	8986	-35.79	-31.93	-0.58
89	SLE RA 20	-422	44	8864	-35.63	-28.62	-0.64
89	SLE RA 21	-495	45	9073	-36.22	-32.18	-0.59
89	SLE FR 1	-368	39	7771	-31.52	-24.96	-0.56
89	SLE FR 2	-392	39	7841	-31.72	-26.15	-0.55
89	SLE FR 3	-369	39	7806	-31.69	-25.06	-0.57
89	SLE FR 4	-407	41	8142	-32.82	-27.17	-0.57
89	SLE FR 5	-384	41	8107	-32.79	-26.08	-0.59
89	SLE FR 6	-394	42	8274	-33.36	-26.67	-0.6
89	SLE QP 1	-368	39	7771	-31.52	-24.96	-0.56
89	SLE QP 2	-383	41	8073	-32.62	-25.98	-0.58
89	SLD 1	234	28	5881	-23.12	5.06	-0.43
89	SLD 2	234	28	5881	-23.12	5.06	-0.43
89	SLD 3	295	20	5013	-16.13	8.9	-0.33
89	SLD 4	295	20	5013	-16.13	8.9	-0.33
89	SLD 5	-291	49	8732	-40.38	-22.5	-0.69
89	SLD 6	-291	49	8732	-40.38	-22.5	-0.69
89	SLD 7	-87	22	5838	-17.06	-9.69	-0.36
89	SLD 8	-87	22	5838	-17.06	-9.69	-0.36
89	SLD 9	-679	60	10307	-48.18	-42.28	-0.81
89	SLD 10	-679	60	10307	-48.18	-42.28	-0.81
89	SLD 11	-476	32	7414	-24.86	-29.47	-0.48
89	SLD 12	-476	32	7414	-24.86	-29.47	-0.48
89	SLD 13	-1061	62	11132	-49.12	-60.87	-0.84
89	SLD 14	-1061	62	11132	-49.12	-60.87	-0.84
89	SLD 15	-1000	53	10264	-42.12	-57.03	-0.74
89	SLD 16	-1000	53	10264	-42.12	-57.03	-0.74
89	SLV 1	1012	11	3036	-10.68	44.18	-0.23
89	SLV 2	1012	11	3036	-10.68	44.18	-0.23
89	SLV 3	1164	-9	974	6.13	53.7	0.01
89	SLV 4	1164	-9	974	6.13	53.7	0.01
89	SLV 5	-196	62	9690	-51.52	-19.39	-0.84
89	SLV 6	-196	62	9690	-51.52	-19.39	-0.84
89	SLV 7	313	-4	2814	4.48	12.37	-0.05
89	SLV 8	313	-4	2814	4.48	12.37	-0.05
89	SLV 9	-1079	85	13331	-69.73	-64.34	-1.12
89	SLV 10	-1079	85	13331	-69.73	-64.34	-1.12
89	SLV 11	-570	19	6455	-13.72	-32.58	-0.33
89	SLV 12	-570	19	6455	-13.72	-32.58	-0.33
89	SLV 13	-1931	90	15172	-71.37	-105.67	-1.18
89	SLV 14	-1931	90	15172	-71.37	-105.67	-1.18
89	SLV 15	-1778	70	13109	-54.57	-96.15	-0.94
89	SLV 16	-1778	70	13109	-54.57	-96.15	-0.94
90	SLU 1	-616	189	7233	-29.42	-31.11	-0.7
90	SLU 2	-755	191	7958	-19.43	-39.32	-0.46
90	SLU 3	-631	190	7414	-30.31	-31.84	-0.73
90	SLU 4	-714	191	7849	-24.32	-36.77	-0.58
90	SLU 5	-765	191	8073	-19.98	-39.81	-0.48
90	SLU 6	-641	190	7529	-30.87	-32.32	-0.74
90	SLU 7	-724	192	7964	-24.88	-37.25	-0.6
90	SLU 8	-636	190	7463	-30.53	-32.08	-0.73
90	SLU 9	-719	191	7898	-24.53	-37.01	-0.59
90	SLU 10	-846	197	8910	-22.92	-44.02	-0.56
90	SLU 11	-722	197	8366	-33.8	-36.54	-0.82
90	SLU 12	-805	198	8802	-27.81	-41.47	-0.68
90	SLU 13	-856	198	9025	-23.47	-44.51	-0.57
90	SLU 14	-732	197	8481	-34.36	-37.03	-0.84
90	SLU 15	-815	198	8917	-28.37	-41.95	-0.69
90	SLU 16	-727	196	8415	-34.02	-36.78	-0.83
90	SLU 17	-810	198	8850	-28.02	-41.71	-0.68
90	SLU 18	-746	199	8593	-34.4	-37.83	-0.84
90	SLU 19	-829	200	9028	-28.41	-42.75	-0.69
90	SLU 20	-756	199	8708	-34.96	-38.31	-0.86
90	SLU 21	-839	200	9143	-28.97	-43.24	-0.71
90	SLU 22	-696	195	8099	-32.85	-35.18	-0.8
90	SLU 23	-834	197	8825	-22.86	-43.39	-0.56
90	SLU 24	-711	197	8280	-33.75	-35.91	-0.82
90	SLU 25	-794	198	8716	-27.75	-40.83	-0.68
90	SLU 26	-844	198	8939	-23.42	-43.87	-0.57

Nodo	Cont.	Reazione a traslazione			Reazione a rotazione		
Ind.	N.br.	x	y	z	x	y	z
90	SLU 27	-720	197	8395	-34.3	-36.39	-0.84
90	SLU 28	-803	198	8831	-28.31	-41.32	-0.69
90	SLU 29	-715	196	8329	-33.96	-36.15	-0.83
90	SLU 30	-798	197	8764	-27.97	-41.07	-0.68
90	SLU 31	-925	204	9777	-26.35	-48.09	-0.65
90	SLU 32	-801	204	9233	-37.24	-40.61	-0.92
90	SLU 33	-885	205	9668	-31.24	-45.54	-0.77
90	SLU 34	-935	205	9892	-26.91	-48.58	-0.67
90	SLU 35	-811	204	9348	-37.79	-41.09	-0.93
90	SLU 36	-894	205	9783	-31.8	-46.02	-0.79
90	SLU 37	-806	203	9281	-37.45	-40.85	-0.92
90	SLU 38	-889	204	9717	-31.46	-45.78	-0.78
90	SLU 39	-826	205	9460	-37.84	-41.89	-0.93
90	SLU 40	-909	206	9895	-31.84	-46.82	-0.79
90	SLU 41	-835	206	9574	-38.39	-42.38	-0.95
90	SLU 42	-919	207	10010	-32.4	-47.31	-0.8
90	SLU 43	-774	243	9106	-37.07	-39.05	-0.88
90	SLU 44	-913	245	9831	-27.08	-47.26	-0.64
90	SLU 45	-789	244	9287	-37.96	-39.78	-0.91
90	SLU 46	-872	245	9722	-31.97	-44.7	-0.76
90	SLU 47	-922	245	9946	-27.63	-47.74	-0.66
90	SLU 48	-799	245	9402	-38.52	-40.26	-0.92
90	SLU 49	-882	246	9837	-32.52	-45.19	-0.78
90	SLU 50	-793	244	9336	-38.17	-40.02	-0.91
90	SLU 51	-877	245	9771	-32.18	-44.94	-0.77
90	SLU 52	-1004	252	10783	-30.57	-51.96	-0.74
90	SLU 53	-880	251	10239	-41.45	-44.48	-1
90	SLU 54	-963	252	10674	-35.46	-49.41	-0.86
90	SLU 55	-1013	252	10898	-31.12	-52.45	-0.75
90	SLU 56	-889	252	10354	-42.01	-44.96	-1.02
90	SLU 57	-973	253	10789	-36.01	-49.89	-0.87
90	SLU 58	-884	251	10288	-41.66	-44.72	-1.01
90	SLU 59	-968	252	10723	-35.67	-49.65	-0.86
90	SLU 60	-904	253	10466	-42.05	-45.76	-1.02
90	SLU 61	-987	254	10901	-36.06	-50.69	-0.87
90	SLU 62	-914	253	10581	-42.61	-46.25	-1.03
90	SLU 63	-997	254	11016	-36.61	-51.18	-0.89
90	SLU 64	-853	250	9972	-40.5	-43.11	-0.98
90	SLU 65	-992	252	10697	-30.51	-51.33	-0.73
90	SLU 66	-868	251	10153	-41.4	-43.84	-1
90	SLU 67	-951	252	10588	-35.4	-48.77	-0.86
90	SLU 68	-1002	252	10812	-31.06	-51.81	-0.75
90	SLU 69	-878	251	10268	-41.95	-44.33	-1.02
90	SLU 70	-961	253	10703	-35.96	-49.26	-0.87
90	SLU 71	-873	251	10202	-41.61	-44.08	-1.01
90	SLU 72	-956	252	10637	-35.61	-49.01	-0.86
90	SLU 73	-1083	258	11650	-34	-56.03	-0.83
90	SLU 74	-959	258	11105	-44.89	-48.55	-1.1
90	SLU 75	-1042	259	11541	-38.89	-53.47	-0.95
90	SLU 76	-1093	259	11765	-34.56	-56.51	-0.84
90	SLU 77	-969	258	11220	-45.44	-49.03	-1.11
90	SLU 78	-1052	260	11656	-39.45	-53.96	-0.97
90	SLU 79	-964	257	11154	-45.1	-48.79	-1.1
90	SLU 80	-1047	259	11589	-39.1	-53.71	-0.96
90	SLU 81	-983	260	11332	-45.48	-49.83	-1.11
90	SLU 82	-1067	261	11768	-39.49	-54.76	-0.97
90	SLU 83	-993	260	11447	-46.04	-50.32	-1.13
90	SLU 84	-1076	261	11883	-40.05	-55.24	-0.98
90	SLE RA 1	-639	191	7480	-30.4	-32.27	-0.73
90	SLE RA 2	-731	192	7964	-23.74	-37.75	-0.57
90	SLE RA 3	-649	191	7601	-31	-32.76	-0.75
90	SLE RA 4	-704	192	7891	-27	-36.04	-0.65
90	SLE RA 5	-738	192	8041	-24.11	-38.07	-0.58
90	SLE RA 6	-655	192	7678	-31.37	-33.08	-0.76
90	SLE RA 7	-711	193	7968	-27.37	-36.37	-0.66
90	SLE RA 8	-652	191	7634	-31.14	-32.92	-0.75
90	SLE RA 9	-707	192	7924	-27.14	-36.2	-0.65
90	SLE RA 10	-792	196	8599	-26.07	-40.88	-0.63
90	SLE RA 11	-710	196	8236	-33.32	-35.89	-0.81
90	SLE RA 12	-765	197	8526	-29.33	-39.18	-0.71
90	SLE RA 13	-799	197	8675	-26.44	-41.2	-0.64
90	SLE RA 14	-716	196	8313	-33.69	-36.22	-0.82
90	SLE RA 15	-771	197	8603	-29.7	-39.5	-0.72
90	SLE RA 16	-713	196	8268	-33.46	-36.05	-0.81
90	SLE RA 17	-768	197	8559	-29.47	-39.34	-0.72
90	SLE RA 18	-726	197	8387	-33.72	-36.75	-0.82
90	SLE RA 19	-781	198	8677	-29.73	-40.03	-0.72
90	SLE RA 20	-732	197	8464	-34.09	-37.07	-0.83
90	SLE RA 21	-788	198	8754	-30.1	-40.36	-0.73
90	SLE FR 1	-639	191	7480	-30.4	-32.27	-0.73
90	SLE FR 2	-658	191	7577	-29.07	-33.36	-0.7
90	SLE FR 3	-642	191	7511	-30.55	-32.4	-0.73
90	SLE FR 4	-684	193	7849	-30.06	-34.71	-0.73
90	SLE FR 5	-668	193	7783	-31.54	-33.74	-0.76
90	SLE FR 6	-682	194	7934	-32.06	-34.51	-0.78
90	SLE QP 1	-639	191	7480	-30.4	-32.27	-0.73
90	SLE QP 2	-665	193	7752	-31.4	-33.61	-0.76
90	SLD 1	-218	231	5491	-27.86	4.18	3.28
90	SLD 2	-218	231	5491	-27.86	4.18	3.28
90	SLD 3	-141	36	4358	-17.1	10.77	3.85
90	SLD 4	-141	36	4358	-17.1	10.77	3.85

Nodo	Cont.	Reazione a traslazione			Reazione a rotazione		
Ind.	N.br.	x	y	z	x	y	z
90	SLD 5	-647	501	8793	-46.65	-32.28	-0.42
90	SLD 6	-647	501	8793	-46.65	-32.28	-0.42
90	SLD 7	-391	-151	5015	-10.79	-10.3	1.49
90	SLD 8	-391	-151	5015	-10.79	-10.3	1.49
90	SLD 9	-939	536	10490	-52	-56.93	-3.01
90	SLD 10	-939	536	10490	-52	-56.93	-3.01
90	SLD 11	-683	-115	6712	-16.14	-34.95	-1.1
90	SLD 12	-683	-115	6712	-16.14	-34.95	-1.1
90	SLD 13	-1189	349	11147	-45.69	-78	-5.37
90	SLD 14	-1189	349	11147	-45.69	-78	-5.37
90	SLD 15	-1112	154	10014	-34.93	-71.41	-4.79
90	SLD 16	-1112	154	10014	-34.93	-71.41	-4.79
90	SLV 1	347	283	2575	-23.2	54.88	9.13
90	SLV 2	347	283	2575	-23.2	54.88	9.13
90	SLV 3	533	-173	-114	2.39	71.14	10.55
90	SLV 4	533	-173	-114	2.39	71.14	10.55
90	SLV 5	-644	911	10278	-67.75	-31.72	0.06
90	SLV 6	-644	911	10278	-67.75	-31.72	0.06
90	SLV 7	-23	-609	1314	17.56	22.47	4.79
90	SLV 8	-23	-609	1314	17.56	22.47	4.79
90	SLV 9	-1307	994	14191	-80.35	-89.7	-6.3
90	SLV 10	-1307	994	14191	-80.35	-89.7	-6.3
90	SLV 11	-686	-526	5227	4.96	-35.5	-1.57
90	SLV 12	-686	-526	5227	4.96	-35.5	-1.57
90	SLV 13	-1864	558	15619	-65.18	-138.36	-12.07
90	SLV 14	-1864	558	15619	-65.18	-138.36	-12.07
90	SLV 15	-1677	102	12929	-39.59	-122.1	-10.65
90	SLV 16	-1677	102	12929	-39.59	-122.1	-10.65
91	SLU 1	-1005	1	3170	-8.72	-24.77	-1.98
91	SLU 2	-1140	-47	3548	-0.84	-28.74	0.06
91	SLU 3	-1032	1	3257	-9.04	-25.43	-2.05
91	SLU 4	-1113	-28	3483	-4.31	-27.81	-0.83
91	SLU 5	-1158	-47	3603	-1.04	-29.17	0.01
91	SLU 6	-1050	1	3312	-9.24	-25.86	-2.1
91	SLU 7	-1131	-28	3539	-4.51	-28.24	-0.88
91	SLU 8	-1040	1	3282	-9.12	-25.63	-2.07
91	SLU 9	-1121	-28	3508	-4.4	-28.01	-0.85
91	SLU 10	-1285	-46	4003	-2.07	-32.33	-0.23
91	SLU 11	-1177	2	3712	-10.27	-29.02	-2.33
91	SLU 12	-1258	-27	3938	-5.54	-31.4	-1.11
91	SLU 13	-1303	-46	4058	-2.27	-32.76	-0.27
91	SLU 14	-1195	2	3768	-10.47	-29.45	-2.38
91	SLU 15	-1276	-27	3994	-5.74	-31.83	-1.16
91	SLU 16	-1185	2	3737	-10.35	-29.22	-2.35
91	SLU 17	-1266	-27	3963	-5.62	-31.6	-1.13
91	SLU 18	-1213	2	3821	-10.47	-29.9	-2.38
91	SLU 19	-1294	-27	4047	-5.74	-32.28	-1.16
91	SLU 20	-1230	2	3876	-10.67	-30.33	-2.43
91	SLU 21	-1311	-27	4103	-5.95	-32.71	-1.21
91	SLU 22	-1136	2	3583	-9.93	-27.99	-2.25
91	SLU 23	-1271	-46	3960	-2.05	-31.96	-0.22
91	SLU 24	-1163	2	3669	-10.25	-28.65	-2.33
91	SLU 25	-1244	-27	3896	-5.52	-31.03	-1.11
91	SLU 26	-1288	-46	4016	-2.25	-32.39	-0.27
91	SLU 27	-1181	2	3725	-10.45	-29.08	-2.37
91	SLU 28	-1262	-27	3951	-5.72	-31.46	-1.15
91	SLU 29	-1171	2	3694	-10.33	-28.85	-2.35
91	SLU 30	-1252	-27	3921	-5.6	-31.23	-1.13
91	SLU 31	-1416	-46	4415	-3.27	-35.55	-0.5
91	SLU 32	-1308	3	4124	-11.48	-32.24	-2.61
91	SLU 33	-1389	-26	4351	-6.75	-34.62	-1.39
91	SLU 34	-1434	-45	4471	-3.48	-35.98	-0.55
91	SLU 35	-1326	3	4180	-11.68	-32.67	-2.66
91	SLU 36	-1407	-26	4406	-6.95	-35.05	-1.44
91	SLU 37	-1316	3	4149	-11.56	-32.44	-2.63
91	SLU 38	-1397	-26	4376	-6.83	-34.82	-1.41
91	SLU 39	-1344	3	4233	-11.68	-33.12	-2.66
91	SLU 40	-1425	-26	4459	-6.95	-35.5	-1.44
91	SLU 41	-1361	3	4289	-11.88	-33.55	-2.7
91	SLU 42	-1442	-26	4515	-7.15	-35.93	-1.48
91	SLU 43	-1262	1	3980	-10.92	-31.09	-2.48
91	SLU 44	-1397	-47	4357	-3.04	-35.07	-0.44
91	SLU 45	-1289	1	4066	-11.24	-31.75	-2.55
91	SLU 46	-1370	-28	4293	-6.51	-34.14	-1.33
91	SLU 47	-1414	-47	4413	-3.24	-35.49	-0.49
91	SLU 48	-1306	1	4122	-11.44	-32.18	-2.59
91	SLU 49	-1387	-28	4348	-6.72	-34.57	-1.38
91	SLU 50	-1297	1	4091	-11.33	-31.95	-2.57
91	SLU 51	-1378	-28	4318	-6.6	-34.34	-1.35
91	SLU 52	-1542	-46	4812	-4.27	-38.66	-0.72
91	SLU 53	-1434	2	4522	-12.47	-35.34	-2.83
91	SLU 54	-1515	-27	4748	-7.74	-37.73	-1.61
91	SLU 55	-1559	-46	4868	-4.47	-39.09	-0.77
91	SLU 56	-1452	2	4577	-12.67	-35.77	-2.88
91	SLU 57	-1533	-27	4804	-7.94	-38.16	-1.66
91	SLU 58	-1442	2	4546	-12.55	-35.54	-2.85
91	SLU 59	-1523	-27	4773	-7.82	-37.93	-1.63
91	SLU 60	-1469	2	4630	-12.67	-36.22	-2.88
91	SLU 61	-1550	-27	4857	-7.95	-38.61	-1.66
91	SLU 62	-1487	2	4686	-12.88	-36.65	-2.92
91	SLU 63	-1568	-27	4912	-8.15	-39.04	-1.7

Nodo	Cont.	Reazione a traslazione			Reazione a rotazione		
Ind.	N.br.	x	y	z	x	y	z
91	SLU 64	-1393	2	4393	-12.13	-34.32	-2.75
91	SLU 65	-1528	-46	4770	-4.25	-38.29	-0.72
91	SLU 66	-1420	2	4479	-12.45	-34.98	-2.83
91	SLU 67	-1501	-27	4705	-7.72	-37.36	-1.61
91	SLU 68	-1545	-46	4825	-4.45	-38.72	-0.77
91	SLU 69	-1437	2	4535	-12.65	-35.4	-2.87
91	SLU 70	-1518	-27	4761	-7.92	-37.79	-1.65
91	SLU 71	-1428	2	4504	-12.53	-35.17	-2.85
91	SLU 72	-1509	-27	4730	-7.81	-37.56	-1.63
91	SLU 73	-1673	-46	5225	-5.48	-41.88	-1
91	SLU 74	-1565	3	4934	-13.68	-38.57	-3.11
91	SLU 75	-1646	-26	5160	-8.95	-40.95	-1.89
91	SLU 76	-1690	-45	5281	-5.68	-42.31	-1.05
91	SLU 77	-1583	3	4990	-13.88	-39	-3.15
91	SLU 78	-1663	-26	5216	-9.15	-41.38	-1.93
91	SLU 79	-1573	3	4959	-13.76	-38.76	-3.13
91	SLU 80	-1654	-26	5185	-9.03	-41.15	-1.91
91	SLU 81	-1600	3	5043	-13.88	-39.44	-3.16
91	SLU 82	-1681	-26	5269	-9.15	-41.83	-1.94
91	SLU 83	-1618	3	5098	-14.08	-39.87	-3.2
91	SLU 84	-1699	-26	5325	-9.36	-42.26	-1.98
91	SLE RA 1	-1043	1	3288	-9.07	-25.69	-2.06
91	SLE RA 2	-1133	-31	3540	-3.81	-28.34	-0.7
91	SLE RA 3	-1061	1	3346	-9.28	-26.13	-2.11
91	SLE RA 4	-1115	-18	3497	-6.13	-27.72	-1.29
91	SLE RA 5	-1144	-31	3577	-3.95	-28.62	-0.73
91	SLE RA 6	-1072	1	3383	-9.41	-26.41	-2.14
91	SLE RA 7	-1126	-18	3534	-6.26	-28	-1.32
91	SLE RA 8	-1066	1	3362	-9.34	-26.26	-2.12
91	SLE RA 9	-1120	-18	3513	-6.18	-27.85	-1.31
91	SLE RA 10	-1229	-30	3843	-4.63	-30.73	-0.89
91	SLE RA 11	-1157	2	3649	-10.1	-28.52	-2.29
91	SLE RA 12	-1211	-17	3800	-6.94	-30.11	-1.48
91	SLE RA 13	-1241	-30	3880	-4.76	-31.02	-0.92
91	SLE RA 14	-1169	2	3686	-10.23	-28.81	-2.32
91	SLE RA 15	-1223	-17	3837	-7.08	-30.4	-1.51
91	SLE RA 16	-1163	2	3666	-10.15	-28.65	-2.31
91	SLE RA 17	-1217	-17	3817	-7	-30.24	-1.49
91	SLE RA 18	-1181	2	3722	-10.23	-29.11	-2.32
91	SLE RA 19	-1235	-17	3873	-7.08	-30.7	-1.51
91	SLE RA 20	-1193	2	3759	-10.37	-29.39	-2.36
91	SLE RA 21	-1247	-17	3910	-7.22	-30.98	-1.54
91	SLE FR 1	-1043	1	3288	-9.07	-25.69	-2.06
91	SLE FR 2	-1061	-5	3338	-8.02	-26.22	-1.79
91	SLE FR 3	-1047	1	3303	-9.12	-25.8	-2.07
91	SLE FR 4	-1102	-5	3469	-8.37	-27.24	-1.87
91	SLE FR 5	-1089	1	3433	-9.47	-26.83	-2.15
91	SLE FR 6	-1112	2	3505	-9.65	-27.4	-2.19
91	SLE QP 1	-1043	1	3288	-9.07	-25.69	-2.06
91	SLE QP 2	-1084	1	3418	-9.42	-26.71	-2.14
91	SLD 1	-615	-34	2075	-4.61	-12.97	-0.94
91	SLD 2	-615	-34	2075	-4.61	-12.97	-0.94
91	SLD 3	-485	-2	1661	-9.22	-9.73	-2.14
91	SLD 4	-485	-2	1661	-9.22	-9.73	-2.14
91	SLD 5	-1140	-58	3643	-1	-27.51	0.04
91	SLD 6	-1140	-58	3643	-1	-27.51	0.04
91	SLD 7	-708	49	2264	-16.34	-16.71	-3.95
91	SLD 8	-708	49	2264	-16.34	-16.71	-3.95
91	SLD 9	-1461	-46	4573	-2.5	-36.72	-0.32
91	SLD 10	-1461	-46	4573	-2.5	-36.72	-0.32
91	SLD 11	-1028	61	3194	-17.84	-25.92	-4.31
91	SLD 12	-1028	61	3194	-17.84	-25.92	-4.31
91	SLD 13	-1683	5	5175	-9.62	-43.69	-2.14
91	SLD 14	-1683	5	5175	-9.62	-43.69	-2.14
91	SLD 15	-1553	37	4762	-14.22	-40.46	-3.33
91	SLD 16	-1553	37	4762	-14.22	-40.46	-3.33
91	SLV 1	-18	-86	358	2.66	4.46	0.89
91	SLV 2	-18	-86	358	2.66	4.46	0.89
91	SLV 3	296	-5	-639	-9.07	12.3	-2.17
91	SLV 4	296	-5	-639	-9.07	12.3	-2.17
91	SLV 5	-1239	-149	4013	12	-29.25	3.41
91	SLV 6	-1239	-149	4013	12	-29.25	3.41
91	SLV 7	-195	124	688	-27.1	-3.12	-6.78
91	SLV 8	-195	124	688	-27.1	-3.12	-6.78
91	SLV 9	-1973	-121	6148	8.27	-50.31	2.51
91	SLV 10	-1973	-121	6148	8.27	-50.31	2.51
91	SLV 11	-929	152	2823	-30.83	-24.18	-7.68
91	SLV 12	-929	152	2823	-30.83	-24.18	-7.68
91	SLV 13	-2464	7	7476	-9.76	-65.73	-2.11
91	SLV 14	-2464	7	7476	-9.76	-65.73	-2.11
91	SLV 15	-2151	89	6478	-21.49	-57.89	-5.17
91	SLV 16	-2151	89	6478	-21.49	-57.89	-5.17
92	SLU 1	-3	-6	340	1.93	-1.34	0.05
92	SLU 2	-3	-5	346	1.84	-1.34	0.05
92	SLU 3	-3	-10	327	2.17	-1.36	0.05
92	SLU 4	-3	-9	330	2.11	-1.36	0.05
92	SLU 5	-3	-7	337	2	-1.35	0.05
92	SLU 6	-3	-12	318	2.32	-1.37	0.05
92	SLU 7	-3	-11	321	2.27	-1.37	0.05
92	SLU 8	-3	-11	322	2.24	-1.36	0.05
92	SLU 9	-3	-10	325	2.19	-1.36	0.05

Nodo	Cont.	Reazione a traslazione			Reazione a rotazione		
Ind.	N.br.	x	y	z	x	y	z
92	SLU 10	-4	-7	470	2.18	-2.05	0.07
92	SLU 11	-4	-12	450	2.51	-2.07	0.07
92	SLU 12	-4	-11	454	2.45	-2.07	0.07
92	SLU 13	-4	-9	460	2.34	-2.06	0.07
92	SLU 14	-4	-14	441	2.67	-2.08	0.07
92	SLU 15	-4	-13	445	2.61	-2.08	0.07
92	SLU 16	-4	-13	446	2.59	-2.07	0.07
92	SLU 17	-4	-12	449	2.53	-2.07	0.07
92	SLU 18	-4	-10	517	2.42	-2.36	0.08
92	SLU 19	-4	-9	520	2.37	-2.36	0.08
92	SLU 20	-4	-12	508	2.58	-2.37	0.08
92	SLU 21	-4	-11	511	2.52	-2.36	0.08
92	SLU 22	-3	-18	330	2.77	-1.63	0.06
92	SLU 23	-3	-16	335	2.68	-1.62	0.06
92	SLU 24	-3	-21	316	3.01	-1.65	0.06
92	SLU 25	-3	-20	319	2.95	-1.64	0.06
92	SLU 26	-3	-18	326	2.84	-1.63	0.06
92	SLU 27	-3	-23	307	3.16	-1.65	0.06
92	SLU 28	-3	-22	310	3.11	-1.65	0.06
92	SLU 29	-3	-22	312	3.09	-1.65	0.06
92	SLU 30	-3	-21	315	3.03	-1.64	0.06
92	SLU 31	-4	-18	459	3.02	-2.33	0.08
92	SLU 32	-4	-23	440	3.35	-2.36	0.08
92	SLU 33	-4	-22	443	3.3	-2.35	0.08
92	SLU 34	-4	-21	450	3.18	-2.34	0.08
92	SLU 35	-4	-25	431	3.51	-2.37	0.08
92	SLU 36	-4	-24	434	3.45	-2.36	0.08
92	SLU 37	-4	-24	435	3.43	-2.36	0.08
92	SLU 38	-4	-23	439	3.37	-2.35	0.08
92	SLU 39	-5	-21	507	3.26	-2.64	0.08
92	SLU 40	-5	-20	510	3.21	-2.64	0.09
92	SLU 41	-5	-23	497	3.42	-2.65	0.09
92	SLU 42	-5	-22	501	3.36	-2.65	0.09
92	SLU 43	-3	-5	446	2.22	-1.65	0.06
92	SLU 44	-3	-3	451	2.13	-1.64	0.06
92	SLU 45	-3	-8	432	2.46	-1.67	0.06
92	SLU 46	-3	-7	436	2.4	-1.66	0.06
92	SLU 47	-3	-5	442	2.29	-1.65	0.06
92	SLU 48	-3	-10	423	2.61	-1.68	0.06
92	SLU 49	-3	-9	427	2.56	-1.67	0.06
92	SLU 50	-3	-9	428	2.54	-1.67	0.06
92	SLU 51	-3	-8	431	2.48	-1.66	0.06
92	SLU 52	-4	-5	575	2.47	-2.35	0.08
92	SLU 53	-4	-10	556	2.8	-2.38	0.08
92	SLU 54	-4	-9	559	2.75	-2.37	0.08
92	SLU 55	-4	-8	566	2.63	-2.36	0.08
92	SLU 56	-4	-12	547	2.96	-2.39	0.08
92	SLU 57	-4	-11	550	2.9	-2.38	0.08
92	SLU 58	-4	-11	552	2.88	-2.38	0.08
92	SLU 59	-4	-10	555	2.82	-2.37	0.08
92	SLU 60	-5	-8	623	2.71	-2.66	0.09
92	SLU 61	-5	-7	626	2.66	-2.66	0.09
92	SLU 62	-5	-10	614	2.87	-2.67	0.09
92	SLU 63	-5	-9	617	2.81	-2.67	0.09
92	SLU 64	-4	-16	435	3.06	-1.94	0.07
92	SLU 65	-4	-14	441	2.97	-1.93	0.07
92	SLU 66	-4	-19	422	3.3	-1.95	0.07
92	SLU 67	-4	-18	425	3.24	-1.95	0.07
92	SLU 68	-4	-17	432	3.13	-1.94	0.07
92	SLU 69	-4	-21	413	3.46	-1.96	0.07
92	SLU 70	-4	-20	416	3.4	-1.96	0.07
92	SLU 71	-4	-20	417	3.38	-1.95	0.07
92	SLU 72	-4	-19	421	3.32	-1.95	0.07
92	SLU 73	-5	-17	565	3.31	-2.64	0.09
92	SLU 74	-5	-21	546	3.64	-2.66	0.09
92	SLU 75	-5	-20	549	3.59	-2.66	0.09
92	SLU 76	-5	-19	556	3.47	-2.65	0.09
92	SLU 77	-5	-23	537	3.8	-2.67	0.09
92	SLU 78	-5	-23	540	3.74	-2.67	0.09
92	SLU 79	-5	-22	541	3.72	-2.66	0.09
92	SLU 80	-5	-21	544	3.66	-2.66	0.09
92	SLU 81	-5	-19	612	3.55	-2.95	0.1
92	SLU 82	-5	-18	616	3.5	-2.95	0.1
92	SLU 83	-5	-21	603	3.71	-2.96	0.1
92	SLU 84	-5	-20	606	3.65	-2.95	0.1
92	SLE RA 1	-3	-10	337	2.17	-1.43	0.05
92	SLE RA 2	-3	-9	341	2.11	-1.42	0.05
92	SLE RA 3	-3	-12	328	2.33	-1.44	0.05
92	SLE RA 4	-3	-11	330	2.29	-1.43	0.05
92	SLE RA 5	-3	-10	335	2.21	-1.43	0.05
92	SLE RA 6	-3	-13	322	2.43	-1.44	0.05
92	SLE RA 7	-3	-13	324	2.4	-1.44	0.05
92	SLE RA 8	-3	-13	325	2.38	-1.44	0.05
92	SLE RA 9	-3	-12	327	2.34	-1.43	0.05
92	SLE RA 10	-4	-10	423	2.34	-1.89	0.06
92	SLE RA 11	-4	-13	411	2.56	-1.91	0.06
92	SLE RA 12	-4	-13	413	2.52	-1.91	0.06
92	SLE RA 13	-4	-12	417	2.44	-1.9	0.06
92	SLE RA 14	-4	-15	405	2.66	-1.92	0.06
92	SLE RA 15	-4	-14	407	2.62	-1.91	0.06
92	SLE RA 16	-4	-14	408	2.61	-1.91	0.06

Nodo	Cont.	Reazione a traslazione			Reazione a rotazione		
Ind.	N.br.	x	y	z	x	y	z
92	SLE RA 17	-4	-13	410	2.57	-1.91	0.06
92	SLE RA 18	-4	-12	455	2.5	-2.1	0.07
92	SLE RA 19	-4	-11	457	2.46	-2.1	0.07
92	SLE RA 20	-4	-13	449	2.6	-2.11	0.07
92	SLE RA 21	-4	-13	451	2.57	-2.11	0.07
92	SLE FR 1	-3	-10	337	2.17	-1.43	0.05
92	SLE FR 2	-3	-9	338	2.16	-1.43	0.05
92	SLE FR 3	-3	-10	335	2.21	-1.43	0.05
92	SLE FR 4	-3	-10	373	2.26	-1.63	0.06
92	SLE FR 5	-3	-11	370	2.31	-1.63	0.06
92	SLE FR 6	-3	-11	396	2.33	-1.76	0.06
92	SLE QP 1	-3	-10	337	2.17	-1.43	0.05
92	SLE QP 2	-3	-10	373	2.27	-1.63	0.06
92	SLD 1	-8	40	548	-1.28	-0.26	0.16
92	SLD 2	-8	40	548	-1.28	-0.26	0.16
92	SLD 3	-7	-42	255	4.59	-0.03	0.18
92	SLD 4	-7	-42	255	4.59	-0.03	0.18
92	SLD 5	-5	130	870	-7.7	-1.56	0.06
92	SLD 6	-5	130	870	-7.7	-1.56	0.06
92	SLD 7	-3	-145	-108	11.87	-0.8	0.12
92	SLD 8	-3	-145	-108	11.87	-0.8	0.12
92	SLD 9	-3	125	853	-7.33	-2.45	-0.01
92	SLD 10	-3	125	853	-7.33	-2.45	-0.01
92	SLD 11	-1	-151	-125	12.24	-1.7	0.05
92	SLD 12	-1	-151	-125	12.24	-1.7	0.05
92	SLD 13	1	22	491	-0.05	-3.23	-0.07
92	SLD 14	1	22	491	-0.05	-3.23	-0.07
92	SLD 15	2	-61	197	5.82	-3	-0.05
92	SLD 16	2	-61	197	5.82	-3	-0.05
92	SLV 1	-14	109	786	-6.09	1.63	0.3
92	SLV 2	-14	109	786	-6.09	1.63	0.3
92	SLV 3	-13	-85	101	7.64	2.19	0.35
92	SLV 4	-13	-85	101	7.64	2.19	0.35
92	SLV 5	-9	318	1537	-21.05	-1.49	0.06
92	SLV 6	-9	318	1537	-21.05	-1.49	0.06
92	SLV 7	-3	-325	-749	24.69	0.36	0.21
92	SLV 8	-3	-325	-749	24.69	0.36	0.21
92	SLV 9	-3	305	1494	-20.15	-3.62	-0.1
92	SLV 10	-3	305	1494	-20.15	-3.62	-0.1
92	SLV 11	3	-339	-792	25.59	-1.77	0.05
92	SLV 12	3	-339	-792	25.59	-1.77	0.05
92	SLV 13	7	64	645	-3.1	-5.45	-0.23
92	SLV 14	7	64	645	-3.1	-5.45	-0.23
92	SLV 15	8	-129	-41	10.62	-4.89	-0.19
92	SLV 16	8	-129	-41	10.62	-4.89	-0.19
93	SLU 1	1	627	2777	-9.34	-0.04	0
93	SLU 2	-1	801	3319	-15.09	-0.2	0.03
93	SLU 3	1	644	2849	-9.61	-0.04	0
93	SLU 4	0	749	3175	-13.06	-0.13	0.02
93	SLU 5	-1	813	3367	-15.28	-0.2	0.03
93	SLU 6	1	656	2898	-9.8	-0.04	0
93	SLU 7	0	760	3223	-13.25	-0.13	0.02
93	SLU 8	1	650	2873	-9.72	-0.04	0
93	SLU 9	0	755	3198	-13.17	-0.13	0.02
93	SLU 10	-1	875	3649	-16.03	-0.2	0.03
93	SLU 11	1	719	3179	-10.55	-0.04	0
93	SLU 12	0	823	3504	-14	-0.14	0.02
93	SLU 13	-1	887	3697	-16.22	-0.2	0.03
93	SLU 14	1	730	3227	-10.74	-0.04	0
93	SLU 15	0	834	3553	-14.19	-0.14	0.02
93	SLU 16	1	725	3203	-10.67	-0.04	0
93	SLU 17	0	829	3528	-14.11	-0.14	0.02
93	SLU 18	1	733	3248	-10.69	-0.05	0
93	SLU 19	0	838	3573	-14.14	-0.14	0.02
93	SLU 20	1	745	3296	-10.88	-0.05	0
93	SLU 21	0	849	3621	-14.33	-0.14	0.02
93	SLU 22	1	700	3094	-10.32	-0.05	0
93	SLU 23	-1	874	3636	-16.07	-0.2	0.03
93	SLU 24	1	717	3167	-10.59	-0.04	0
93	SLU 25	0	821	3492	-14.03	-0.14	0.02
93	SLU 26	-1	885	3684	-16.26	-0.2	0.03
93	SLU 27	1	728	3215	-10.78	-0.04	0
93	SLU 28	0	833	3540	-14.23	-0.14	0.02
93	SLU 29	1	723	3190	-10.7	-0.04	0
93	SLU 30	0	827	3516	-14.15	-0.14	0.02
93	SLU 31	0	948	3966	-17.01	-0.21	0.03
93	SLU 32	1	791	3497	-11.53	-0.05	0
93	SLU 33	0	895	3822	-14.98	-0.15	0.02
93	SLU 34	0	959	4014	-17.2	-0.21	0.03
93	SLU 35	1	802	3545	-11.72	-0.05	0
93	SLU 36	0	907	3870	-15.17	-0.15	0.02
93	SLU 37	1	797	3520	-11.64	-0.05	0
93	SLU 38	0	901	3846	-15.09	-0.14	0.02
93	SLU 39	1	805	3565	-11.67	-0.05	0
93	SLU 40	0	910	3891	-15.11	-0.15	0.02
93	SLU 41	1	817	3613	-11.86	-0.05	0
93	SLU 42	0	921	3939	-15.31	-0.15	0.02
93	SLU 43	1	791	3501	-11.81	-0.05	0
93	SLU 44	0	965	4043	-17.56	-0.21	0.03
93	SLU 45	1	808	3574	-12.07	-0.05	0
93	SLU 46	0	912	3899	-15.52	-0.14	0.02

Nodo	Cont.	Reazione a traslazione			Reazione a rotazione		
Ind.	N.br.	x	y	z	x	y	z
93	SLU 47	0	976	4091	-17.75	-0.21	0.03
93	SLU 48	1	820	3622	-12.27	-0.05	0
93	SLU 49	0	924	3947	-15.71	-0.14	0.02
93	SLU 50	1	814	3597	-12.19	-0.05	0
93	SLU 51	0	918	3923	-15.64	-0.14	0.02
93	SLU 52	0	1039	4373	-18.5	-0.21	0.03
93	SLU 53	1	882	3903	-13.02	-0.05	0
93	SLU 54	0	986	4229	-16.46	-0.15	0.02
93	SLU 55	0	1050	4421	-18.69	-0.21	0.03
93	SLU 56	1	894	3952	-13.21	-0.05	0
93	SLU 57	0	998	4277	-16.65	-0.15	0.02
93	SLU 58	1	888	3927	-13.13	-0.05	0
93	SLU 59	0	992	4252	-16.58	-0.15	0.02
93	SLU 60	1	897	3972	-13.15	-0.06	0
93	SLU 61	0	1001	4297	-16.6	-0.15	0.02
93	SLU 62	1	908	4020	-13.35	-0.06	0
93	SLU 63	0	1013	4346	-16.79	-0.15	0.02
93	SLU 64	1	863	3818	-12.79	-0.05	0
93	SLU 65	0	1037	4361	-18.53	-0.21	0.03
93	SLU 66	1	880	3891	-13.05	-0.05	0
93	SLU 67	0	985	4216	-16.5	-0.15	0.02
93	SLU 68	0	1049	4409	-18.73	-0.21	0.03
93	SLU 69	1	892	3939	-13.25	-0.05	0
93	SLU 70	0	996	4264	-16.69	-0.15	0.02
93	SLU 71	1	886	3915	-13.17	-0.05	0
93	SLU 72	0	991	4240	-16.62	-0.15	0.02
93	SLU 73	0	1111	4690	-19.48	-0.22	0.03
93	SLU 74	1	954	4221	-14	-0.06	0
93	SLU 75	0	1059	4546	-17.44	-0.16	0.02
93	SLU 76	0	1123	4738	-19.67	-0.22	0.03
93	SLU 77	1	966	4269	-14.19	-0.06	0
93	SLU 78	0	1070	4594	-17.63	-0.15	0.02
93	SLU 79	1	960	4244	-14.11	-0.06	0
93	SLU 80	0	1065	4570	-17.56	-0.15	0.02
93	SLU 81	1	969	4290	-14.13	-0.06	0
93	SLU 82	0	1073	4615	-17.58	-0.16	0.02
93	SLU 83	1	980	4338	-14.32	-0.06	0
93	SLU 84	0	1085	4663	-17.77	-0.16	0.02
93	SLE RA 1	1	648	2868	-9.62	-0.04	0
93	SLE RA 2	0	764	3229	-13.45	-0.15	0.02
93	SLE RA 3	1	659	2916	-9.8	-0.04	0
93	SLE RA 4	0	729	3133	-12.1	-0.1	0.01
93	SLE RA 5	0	772	3261	-13.58	-0.15	0.02
93	SLE RA 6	1	667	2948	-9.93	-0.04	0
93	SLE RA 7	0	737	3165	-12.22	-0.1	0.01
93	SLE RA 8	1	663	2932	-9.88	-0.04	0
93	SLE RA 9	0	733	3148	-12.17	-0.1	0.01
93	SLE RA 10	0	813	3449	-14.08	-0.15	0.02
93	SLE RA 11	1	709	3136	-10.43	-0.04	0
93	SLE RA 12	0	778	3353	-12.73	-0.11	0.01
93	SLE RA 13	0	821	3481	-14.21	-0.15	0.02
93	SLE RA 14	1	716	3168	-10.55	-0.04	0
93	SLE RA 15	0	786	3385	-12.85	-0.11	0.01
93	SLE RA 16	1	713	3152	-10.5	-0.04	0
93	SLE RA 17	0	782	3368	-12.8	-0.11	0.01
93	SLE RA 18	1	719	3182	-10.52	-0.05	0
93	SLE RA 19	0	788	3398	-12.82	-0.11	0.01
93	SLE RA 20	1	726	3214	-10.65	-0.05	0
93	SLE RA 21	0	796	3430	-12.94	-0.11	0.01
93	SLE FR 1	1	648	2868	-9.62	-0.04	0
93	SLE FR 2	1	671	2940	-10.39	-0.06	0
93	SLE FR 3	1	651	2880	-9.67	-0.04	0
93	SLE FR 4	1	692	3034	-10.66	-0.06	0
93	SLE FR 5	1	672	2975	-9.94	-0.04	0
93	SLE FR 6	1	683	3025	-10.07	-0.04	0
93	SLE QP 1	1	648	2868	-9.62	-0.04	0
93	SLE QP 2	1	669	2962	-9.89	-0.04	0
93	SLD 1	-15	682	3020	-10.07	-1.99	0.37
93	SLD 2	-15	682	3020	-10.07	-1.99	0.37
93	SLD 3	-9	384	2022	-1.19	-1.26	0.23
93	SLD 4	-9	384	2022	-1.19	-1.26	0.23
93	SLD 5	-13	1125	4492	-23.42	-1.74	0.33
93	SLD 6	-13	1125	4492	-23.42	-1.74	0.33
93	SLD 7	7	132	1167	6.19	0.7	-0.15
93	SLD 8	7	132	1167	6.19	0.7	-0.15
93	SLD 9	-5	1207	4757	-25.97	-0.79	0.15
93	SLD 10	-5	1207	4757	-25.97	-0.79	0.15
93	SLD 11	15	213	1431	3.63	1.65	-0.33
93	SLD 12	15	213	1431	3.63	1.65	-0.33
93	SLD 13	11	954	3901	-18.59	1.18	-0.23
93	SLD 14	11	954	3901	-18.59	1.18	-0.23
93	SLD 15	17	656	2904	-9.71	1.91	-0.37
93	SLD 16	17	656	2904	-9.71	1.91	-0.37
93	SLV 1	-40	690	3062	-10.03	-4.92	0.94
93	SLV 2	-40	690	3062	-10.03	-4.92	0.94
93	SLV 3	-25	-10	722	10.83	-3.05	0.57
93	SLV 4	-25	-10	722	10.83	-3.05	0.57
93	SLV 5	-34	1736	6542	-41.57	-4.36	0.84
93	SLV 6	-34	1736	6542	-41.57	-4.36	0.84
93	SLV 7	16	-595	-1261	27.96	1.91	-0.39
93	SLV 8	16	-595	-1261	27.96	1.91	-0.39

Nodo	Cont.	Reazione a traslazione			Reazione a rotazione		
Ind.	N.br.	x	y	z	x	y	z
93	SLV 9	-14	1934	7184	-47.75	-1.99	0.39
93	SLV 10	-14	1934	7184	-47.75	-1.99	0.39
93	SLV 11	36	-398	-619	21.79	4.27	-0.84
93	SLV 12	36	-398	-619	21.79	4.27	-0.84
93	SLV 13	26	1348	5202	-30.61	2.96	-0.57
93	SLV 14	26	1348	5202	-30.61	2.96	-0.57
93	SLV 15	42	648	2861	-9.75	4.84	-0.94
93	SLV 16	42	648	2861	-9.75	4.84	-0.94
94	SLU 1	-3	70	4929	0.85	-0.13	-0.01
94	SLU 2	-3	66	4919	1.07	-0.16	-0.01
94	SLU 3	-3	79	5042	0.6	-0.11	-0.01
94	SLU 4	-3	77	5036	0.73	-0.12	-0.01
94	SLU 5	-3	73	4999	0.88	-0.14	-0.01
94	SLU 6	-3	85	5121	0.41	-0.08	-0.01
94	SLU 7	-3	83	5115	0.54	-0.1	-0.01
94	SLU 8	-3	83	5089	0.48	-0.08	-0.01
94	SLU 9	-3	81	5083	0.61	-0.1	-0.01
94	SLU 10	-3	72	5642	1.22	-0.23	-0.01
94	SLU 11	-3	85	5764	0.75	-0.18	-0.01
94	SLU 12	-3	82	5758	0.88	-0.2	-0.01
94	SLU 13	-3	78	5722	1.03	-0.21	-0.01
94	SLU 14	-3	91	5844	0.56	-0.16	-0.01
94	SLU 15	-3	89	5838	0.69	-0.18	-0.01
94	SLU 16	-3	89	5812	0.63	-0.16	-0.01
94	SLU 17	-3	86	5806	0.76	-0.18	-0.01
94	SLU 18	-3	79	5962	1.07	-0.24	-0.01
94	SLU 19	-3	76	5956	1.2	-0.26	-0.01
94	SLU 20	-3	85	6041	0.88	-0.21	-0.01
94	SLU 21	-3	82	6035	1.01	-0.23	-0.01
94	SLU 22	-3	78	5497	0.86	-0.22	-0.01
94	SLU 23	-3	74	5487	1.07	-0.25	-0.01
94	SLU 24	-3	86	5609	0.6	-0.2	-0.01
94	SLU 25	-3	84	5603	0.73	-0.22	-0.01
94	SLU 26	-3	80	5567	0.89	-0.23	-0.01
94	SLU 27	-3	93	5689	0.42	-0.18	-0.01
94	SLU 28	-3	90	5683	0.54	-0.2	-0.01
94	SLU 29	-3	91	5657	0.49	-0.18	-0.01
94	SLU 30	-3	88	5651	0.61	-0.2	-0.01
94	SLU 31	-4	79	6210	1.22	-0.33	-0.01
94	SLU 32	-4	92	6332	0.75	-0.28	-0.01
94	SLU 33	-4	90	6326	0.88	-0.3	-0.01
94	SLU 34	-4	86	6290	1.04	-0.31	-0.01
94	SLU 35	-4	98	6412	0.57	-0.25	-0.01
94	SLU 36	-4	96	6406	0.69	-0.27	-0.01
94	SLU 37	-4	96	6379	0.64	-0.25	-0.01
94	SLU 38	-4	94	6373	0.76	-0.27	-0.01
94	SLU 39	-4	86	6529	1.07	-0.33	-0.01
94	SLU 40	-4	83	6523	1.2	-0.35	-0.01
94	SLU 41	-4	92	6609	0.89	-0.31	-0.01
94	SLU 42	-4	90	6603	1.02	-0.33	-0.01
94	SLU 43	-3	89	6213	1.11	-0.13	-0.01
94	SLU 44	-3	85	6204	1.32	-0.16	-0.01
94	SLU 45	-3	98	6326	0.85	-0.11	-0.01
94	SLU 46	-3	95	6320	0.98	-0.13	-0.01
94	SLU 47	-3	91	6283	1.14	-0.14	-0.01
94	SLU 48	-3	104	6406	0.67	-0.09	-0.01
94	SLU 49	-3	102	6400	0.79	-0.11	-0.01
94	SLU 50	-3	102	6373	0.74	-0.09	-0.01
94	SLU 51	-3	99	6367	0.86	-0.11	-0.01
94	SLU 52	-4	91	6926	1.47	-0.24	-0.01
94	SLU 53	-4	103	7048	1	-0.19	-0.01
94	SLU 54	-4	101	7042	1.13	-0.21	-0.01
94	SLU 55	-4	97	7006	1.29	-0.22	-0.01
94	SLU 56	-4	110	7128	0.82	-0.16	-0.01
94	SLU 57	-4	107	7122	0.94	-0.18	-0.01
94	SLU 58	-4	108	7096	0.89	-0.16	-0.01
94	SLU 59	-4	105	7090	1.01	-0.18	-0.01
94	SLU 60	-4	97	7246	1.32	-0.24	-0.01
94	SLU 61	-4	95	7240	1.45	-0.26	-0.01
94	SLU 62	-4	104	7326	1.14	-0.22	-0.01
94	SLU 63	-4	101	7320	1.26	-0.24	-0.01
94	SLU 64	-4	96	6781	1.11	-0.23	-0.01
94	SLU 65	-4	92	6771	1.33	-0.26	-0.01
94	SLU 66	-4	105	6893	0.86	-0.21	-0.01
94	SLU 67	-4	103	6887	0.99	-0.23	-0.01
94	SLU 68	-4	99	6851	1.14	-0.24	-0.01
94	SLU 69	-4	111	6973	0.67	-0.18	-0.01
94	SLU 70	-4	109	6967	0.8	-0.2	-0.01
94	SLU 71	-4	109	6941	0.74	-0.18	-0.01
94	SLU 72	-4	107	6935	0.87	-0.2	-0.01
94	SLU 73	-4	98	7494	1.48	-0.34	-0.01
94	SLU 74	-4	111	7616	1.01	-0.28	-0.01
94	SLU 75	-4	108	7610	1.14	-0.3	-0.01
94	SLU 76	-4	104	7574	1.29	-0.31	-0.01
94	SLU 77	-4	117	7696	0.82	-0.26	-0.01
94	SLU 78	-4	115	7690	0.95	-0.28	-0.01
94	SLU 79	-4	115	7663	0.89	-0.26	-0.01
94	SLU 80	-4	112	7657	1.02	-0.28	-0.01
94	SLU 81	-4	105	7813	1.33	-0.34	-0.01
94	SLU 82	-5	102	7808	1.46	-0.36	-0.01
94	SLU 83	-4	111	7893	1.14	-0.32	-0.01

Nodo	Cont.	Reazione a traslazione			Reazione a rotazione		
Ind.	N.br.	x	y	z	x	y	z
94	SLU 84	-5	108	7887	1.27	-0.33	-0.01
94	SLE RA 1	-3	73	5092	0.86	-0.16	-0.01
94	SLE RA 2	-3	70	5085	1	-0.18	-0.01
94	SLE RA 3	-3	78	5166	0.68	-0.14	-0.01
94	SLE RA 4	-3	77	5162	0.77	-0.15	-0.01
94	SLE RA 5	-3	74	5138	0.87	-0.16	-0.01
94	SLE RA 6	-3	83	5220	0.56	-0.13	-0.01
94	SLE RA 7	-3	81	5216	0.65	-0.14	-0.01
94	SLE RA 8	-3	81	5198	0.61	-0.13	-0.01
94	SLE RA 9	-3	79	5194	0.69	-0.14	-0.01
94	SLE RA 10	-3	74	5567	1.1	-0.23	-0.01
94	SLE RA 11	-3	82	5648	0.78	-0.19	-0.01
94	SLE RA 12	-3	80	5644	0.87	-0.2	-0.01
94	SLE RA 13	-3	78	5620	0.97	-0.21	-0.01
94	SLE RA 14	-3	86	5701	0.66	-0.18	-0.01
94	SLE RA 15	-3	85	5697	0.75	-0.19	-0.01
94	SLE RA 16	-3	85	5680	0.71	-0.18	-0.01
94	SLE RA 17	-3	83	5676	0.79	-0.19	-0.01
94	SLE RA 18	-3	78	5780	1	-0.23	-0.01
94	SLE RA 19	-3	76	5776	1.08	-0.24	-0.01
94	SLE RA 20	-3	82	5833	0.87	-0.21	-0.01
94	SLE RA 21	-3	81	5829	0.96	-0.23	-0.01
94	SLE FR 1	-3	73	5092	0.86	-0.16	-0.01
94	SLE FR 2	-3	72	5090	0.88	-0.16	-0.01
94	SLE FR 3	-3	74	5113	0.81	-0.15	-0.01
94	SLE FR 4	-3	74	5297	0.93	-0.18	-0.01
94	SLE FR 5	-3	76	5319	0.85	-0.17	-0.01
94	SLE FR 6	-3	75	5436	0.93	-0.19	-0.01
94	SLE QP 1	-3	73	5092	0.86	-0.16	-0.01
94	SLE QP 2	-3	74	5298	0.9	-0.18	-0.01
94	SLD 1	0	201	4958	-4.37	1.61	0
94	SLD 2	0	201	4958	-4.37	1.61	0
94	SLD 3	-2	-279	4538	17.62	0.86	0
94	SLD 4	-2	-279	4538	17.62	0.86	0
94	SLD 5	1	841	5833	-34.03	1.48	-0.01
94	SLD 6	1	841	5833	-34.03	1.48	-0.01
94	SLD 7	-6	-760	4433	39.27	-0.99	0
94	SLD 8	-6	-760	4433	39.27	-0.99	0
94	SLD 9	0	909	6163	-37.47	0.64	-0.01
94	SLD 10	0	909	6163	-37.47	0.64	-0.01
94	SLD 11	-7	-693	4763	35.83	-1.84	-0.01
94	SLD 12	-7	-693	4763	35.83	-1.84	-0.01
94	SLD 13	-4	428	6058	-15.83	-1.22	-0.02
94	SLD 14	-4	428	6058	-15.83	-1.22	-0.02
94	SLD 15	-6	-53	5638	6.16	-1.96	-0.02
94	SLD 16	-6	-53	5638	6.16	-1.96	-0.02
94	SLV 1	4	371	4538	-11.45	4	0.01
94	SLV 2	4	371	4538	-11.45	4	0.01
94	SLV 3	-1	-750	3556	39.86	2.26	0.01
94	SLV 4	-1	-750	3556	39.86	2.26	0.01
94	SLV 5	6	1863	6560	-80.61	3.72	-0.01
94	SLV 6	6	1863	6560	-80.61	3.72	-0.01
94	SLV 7	-10	-1873	3285	90.39	-2.09	0
94	SLV 8	-10	-1873	3285	90.39	-2.09	0
94	SLV 9	4	2021	7311	-88.6	1.73	-0.02
94	SLV 10	4	2021	7311	-88.6	1.73	-0.02
94	SLV 11	-12	-1714	4036	82.41	-4.07	-0.01
94	SLV 12	-12	-1714	4036	82.41	-4.07	-0.01
94	SLV 13	-5	899	7040	-38.06	-2.61	-0.03
94	SLV 14	-5	899	7040	-38.06	-2.61	-0.03
94	SLV 15	-9	-222	6058	13.24	-4.36	-0.03
94	SLV 16	-9	-222	6058	13.24	-4.36	-0.03
95	SLU 1	-1	1105	5638	-46.64	2.44	0.02
95	SLU 2	-6	1076	6036	-46.79	-0.85	0.02
95	SLU 3	-1	1136	5799	-47.93	2.52	0.02
95	SLU 4	-4	1119	6037	-48.02	0.55	0.02
95	SLU 5	-6	1092	6140	-47.45	-0.79	0.02
95	SLU 6	-1	1152	5903	-48.59	2.58	0.02
95	SLU 7	-4	1134	6142	-48.68	0.61	0.02
95	SLU 8	-1	1137	5848	-47.97	2.56	0.02
95	SLU 9	-4	1119	6086	-48.06	0.59	0.02
95	SLU 10	-6	1201	6723	-52.21	-0.46	0.03
95	SLU 11	-1	1261	6486	-53.34	2.9	0.02
95	SLU 12	-4	1244	6725	-53.43	0.93	0.02
95	SLU 13	-6	1217	6828	-52.87	-0.4	0.03
95	SLU 14	-1	1277	6591	-54.01	2.96	0.02
95	SLU 15	-4	1260	6829	-54.09	0.99	0.03
95	SLU 16	0	1262	6535	-53.39	2.94	0.02
95	SLU 17	-4	1245	6774	-53.47	0.97	0.03
95	SLU 18	0	1284	6621	-54.38	2.98	0.02
95	SLU 19	-4	1267	6859	-54.47	1.01	0.03
95	SLU 20	0	1300	6726	-55.04	3.05	0.02
95	SLU 21	-4	1283	6964	-55.13	1.08	0.03
95	SLU 22	-1	1230	6290	-51.98	2.78	0.02
95	SLU 23	-6	1201	6687	-52.13	-0.5	0.03
95	SLU 24	-1	1261	6451	-53.26	2.86	0.02
95	SLU 25	-4	1244	6689	-53.35	0.89	0.02
95	SLU 26	-6	1217	6792	-52.79	-0.44	0.03
95	SLU 27	-1	1277	6555	-53.93	2.92	0.02
95	SLU 28	-4	1259	6793	-54.02	0.95	0.02
95	SLU 29	-1	1262	6499	-53.31	2.9	0.02

Nodo	Cont.	Reazione a traslazione			Reazione a rotazione		
Ind.	N.br.	x	y	z	x	y	z
95	SLU 30	-4	1244	6738	-53.39	0.93	0.02
95	SLU 31	-6	1326	7375	-57.54	-0.12	0.03
95	SLU 32	-1	1386	7138	-58.68	3.24	0.02
95	SLU 33	-4	1369	7377	-58.77	1.27	0.03
95	SLU 34	-6	1342	7480	-58.21	-0.06	0.03
95	SLU 35	-1	1402	7243	-59.34	3.3	0.02
95	SLU 36	-4	1385	7481	-59.43	1.33	0.03
95	SLU 37	0	1387	7187	-58.72	3.29	0.02
95	SLU 38	-4	1370	7425	-58.81	1.32	0.03
95	SLU 39	0	1409	7273	-59.72	3.33	0.02
95	SLU 40	-4	1392	7511	-59.8	1.36	0.03
95	SLU 41	0	1425	7377	-60.38	3.39	0.02
95	SLU 42	-4	1408	7616	-60.47	1.42	0.03
95	SLU 43	-1	1394	7106	-58.81	3.05	0.02
95	SLU 44	-6	1365	7504	-58.96	-0.23	0.03
95	SLU 45	-1	1425	7267	-60.09	3.13	0.02
95	SLU 46	-4	1407	7505	-60.18	1.16	0.03
95	SLU 47	-6	1381	7608	-59.62	-0.17	0.03
95	SLU 48	-1	1441	7371	-60.76	3.19	0.02
95	SLU 49	-4	1423	7610	-60.84	1.22	0.03
95	SLU 50	-1	1426	7316	-60.13	3.17	0.02
95	SLU 51	-4	1408	7554	-60.22	1.2	0.03
95	SLU 52	-6	1490	8191	-64.37	0.15	0.03
95	SLU 53	-1	1550	7954	-65.51	3.51	0.03
95	SLU 54	-4	1533	8193	-65.59	1.54	0.03
95	SLU 55	-6	1506	8296	-65.03	0.21	0.03
95	SLU 56	-1	1566	8059	-66.17	3.57	0.03
95	SLU 57	-4	1548	8297	-66.26	1.6	0.03
95	SLU 58	-1	1551	8003	-65.55	3.56	0.03
95	SLU 59	-4	1533	8242	-65.64	1.59	0.03
95	SLU 60	-1	1573	8089	-66.54	3.6	0.03
95	SLU 61	-4	1556	8327	-66.63	1.63	0.03
95	SLU 62	-1	1589	8194	-67.21	3.66	0.03
95	SLU 63	-4	1571	8432	-67.29	1.69	0.03
95	SLU 64	-1	1519	7758	-64.14	3.39	0.03
95	SLU 65	-6	1490	8155	-64.29	0.11	0.03
95	SLU 66	-1	1550	7919	-65.43	3.47	0.03
95	SLU 67	-4	1532	8157	-65.52	1.5	0.03
95	SLU 68	-6	1506	8260	-64.95	0.17	0.03
95	SLU 69	-1	1566	8023	-66.09	3.53	0.03
95	SLU 70	-4	1548	8261	-66.18	1.56	0.03
95	SLU 71	-1	1551	7967	-65.47	3.52	0.03
95	SLU 72	-4	1533	8206	-65.56	1.55	0.03
95	SLU 73	-6	1615	8843	-69.71	0.49	0.03
95	SLU 74	-1	1675	8606	-70.84	3.86	0.03
95	SLU 75	-4	1658	8845	-70.93	1.89	0.03
95	SLU 76	-6	1631	8948	-70.37	0.55	0.03
95	SLU 77	-1	1691	8711	-71.51	3.92	0.03
95	SLU 78	-4	1673	8949	-71.59	1.95	0.03
95	SLU 79	-1	1676	8655	-70.89	3.9	0.03
95	SLU 80	-4	1658	8894	-70.97	1.93	0.03
95	SLU 81	-1	1698	8741	-71.88	3.94	0.03
95	SLU 82	-4	1681	8979	-71.97	1.97	0.03
95	SLU 83	-1	1714	8845	-72.54	4	0.03
95	SLU 84	-4	1696	9084	-72.63	2.03	0.03
95	SLE RA 1	-1	1141	5825	-48.17	2.54	0.02
95	SLE RA 2	-4	1122	6089	-48.27	0.35	0.02
95	SLE RA 3	-1	1162	5931	-49.03	2.59	0.02
95	SLE RA 4	-3	1150	6090	-49.08	1.27	0.02
95	SLE RA 5	-4	1132	6159	-48.71	0.39	0.02
95	SLE RA 6	-1	1172	6001	-49.47	2.63	0.02
95	SLE RA 7	-3	1160	6160	-49.53	1.31	0.02
95	SLE RA 8	-1	1162	5964	-49.05	2.62	0.02
95	SLE RA 9	-3	1150	6123	-49.11	1.3	0.02
95	SLE RA 10	-4	1205	6548	-51.88	0.6	0.02
95	SLE RA 11	-1	1245	6390	-52.63	2.84	0.02
95	SLE RA 12	-3	1233	6549	-52.69	1.53	0.02
95	SLE RA 13	-4	1216	6618	-52.32	0.64	0.02
95	SLE RA 14	-1	1256	6460	-53.08	2.88	0.02
95	SLE RA 15	-3	1244	6619	-53.14	1.57	0.02
95	SLE RA 16	-1	1246	6423	-52.66	2.87	0.02
95	SLE RA 17	-3	1234	6581	-52.72	1.56	0.02
95	SLE RA 18	0	1260	6480	-53.33	2.9	0.02
95	SLE RA 19	-3	1249	6639	-53.38	1.59	0.02
95	SLE RA 20	0	1271	6549	-53.77	2.94	0.02
95	SLE RA 21	-3	1259	6708	-53.83	1.63	0.02
95	SLE FR 1	-1	1141	5825	-48.17	2.54	0.02
95	SLE FR 2	-1	1137	5878	-48.19	2.1	0.02
95	SLE FR 3	-1	1145	5852	-48.35	2.55	0.02
95	SLE FR 4	-1	1173	6074	-49.74	2.21	0.02
95	SLE FR 5	-1	1181	6049	-49.89	2.66	0.02
95	SLE FR 6	-1	1201	6152	-50.75	2.72	0.02
95	SLE QP 1	-1	1141	5825	-48.17	2.54	0.02
95	SLE QP 2	-1	1177	6021	-49.72	2.64	0.02
95	SLD 1	1	1700	8726	-72.43	4.36	0.04
95	SLD 2	1	1700	8726	-72.43	4.36	0.04
95	SLD 3	9	1173	7560	-48.6	7.88	0.03
95	SLD 4	9	1173	7560	-48.6	7.88	0.03
95	SLD 5	-11	2133	8601	-92.68	-2.17	0.04
95	SLD 6	-11	2133	8601	-92.68	-2.17	0.04
95	SLD 7	14	377	4715	-13.23	9.54	0.01

Nodo	Cont.	Reazione a traslazione			Reazione a rotazione		
Ind.	N.br.	x	y	z	x	y	z
95	SLD 8	14	377	4715	-13.23	9.54	0.01
95	SLD 9	-15	1977	7328	-86.2	-4.26	0.03
95	SLD 10	-15	1977	7328	-86.2	-4.26	0.03
95	SLD 11	10	221	3442	-6.75	7.46	0
95	SLD 12	10	221	3442	-6.75	7.46	0
95	SLD 13	-10	1181	4482	-50.84	-2.59	0.01
95	SLD 14	-10	1181	4482	-50.84	-2.59	0.01
95	SLD 15	-2	654	3317	-27	0.93	0
95	SLD 16	-2	654	3317	-27	0.93	0
95	SLV 1	3	2404	12295	-103	6.51	0.07
95	SLV 2	3	2404	12295	-103	6.51	0.07
95	SLV 3	22	1170	9567	-47.3	15.3	0.05
95	SLV 4	22	1170	9567	-47.3	15.3	0.05
95	SLV 5	-27	3415	12042	-150.19	-9.52	0.06
95	SLV 6	-27	3415	12042	-150.19	-9.52	0.06
95	SLV 7	34	-696	2946	35.5	19.76	0
95	SLV 8	34	-696	2946	35.5	19.76	0
95	SLV 9	-35	3049	9096	-134.93	-14.47	0.04
95	SLV 10	-35	3049	9096	-134.93	-14.47	0.04
95	SLV 11	26	-1062	1	50.76	14.81	-0.02
95	SLV 12	26	-1062	1	50.76	14.81	-0.02
95	SLV 13	-23	1184	2476	-52.14	-10.01	-0.01
95	SLV 14	-23	1184	2476	-52.14	-10.01	-0.01
95	SLV 15	-5	-50	-253	3.57	-1.22	-0.03
95	SLV 16	-5	-50	-253	3.57	-1.22	-0.03
96	SLU 1	2	124	4860	-10.52	1.73	0.02
96	SLU 2	3	134	4815	-10.8	1.85	0.02
96	SLU 3	2	132	4971	-10.94	1.76	0.02
96	SLU 4	3	138	4944	-11.11	1.83	0.02
96	SLU 5	3	139	4894	-11.08	1.87	0.02
96	SLU 6	2	136	5051	-11.22	1.79	0.02
96	SLU 7	3	143	5023	-11.38	1.86	0.02
96	SLU 8	2	134	5019	-11.08	1.77	0.02
96	SLU 9	3	140	4992	-11.24	1.85	0.02
96	SLU 10	4	150	5485	-12.27	2.19	0.03
96	SLU 11	3	147	5641	-12.41	2.11	0.03
96	SLU 12	4	153	5614	-12.58	2.18	0.03
96	SLU 13	4	155	5564	-12.55	2.21	0.03
96	SLU 14	3	152	5720	-12.69	2.13	0.03
96	SLU 15	4	158	5693	-12.86	2.2	0.03
96	SLU 16	3	149	5689	-12.55	2.12	0.03
96	SLU 17	4	155	5662	-12.72	2.19	0.03
96	SLU 18	4	146	5817	-12.62	2.22	0.03
96	SLU 19	4	152	5790	-12.79	2.29	0.04
96	SLU 20	4	151	5897	-12.9	2.24	0.03
96	SLU 21	4	157	5869	-13.07	2.31	0.04
96	SLU 22	3	137	5407	-11.72	2.06	0.03
96	SLU 23	3	147	5361	-12	2.18	0.03
96	SLU 24	3	144	5518	-12.14	2.09	0.03
96	SLU 25	3	151	5490	-12.31	2.17	0.03
96	SLU 26	3	152	5441	-12.28	2.2	0.03
96	SLU 27	3	149	5597	-12.42	2.12	0.03
96	SLU 28	3	155	5570	-12.59	2.19	0.03
96	SLU 29	3	146	5565	-12.28	2.11	0.03
96	SLU 30	3	153	5538	-12.45	2.18	0.03
96	SLU 31	4	163	6031	-13.47	2.52	0.04
96	SLU 32	4	160	6188	-13.61	2.44	0.04
96	SLU 33	4	166	6160	-13.78	2.51	0.04
96	SLU 34	5	167	6111	-13.75	2.54	0.04
96	SLU 35	4	165	6267	-13.89	2.46	0.04
96	SLU 36	4	171	6240	-14.06	2.53	0.04
96	SLU 37	4	162	6235	-13.75	2.45	0.04
96	SLU 38	4	168	6208	-13.92	2.52	0.04
96	SLU 39	5	159	6364	-13.82	2.55	0.04
96	SLU 40	5	165	6337	-13.99	2.62	0.04
96	SLU 41	5	164	6443	-14.1	2.57	0.04
96	SLU 42	5	170	6416	-14.27	2.64	0.04
96	SLU 43	3	157	6131	-13.27	2.13	0.02
96	SLU 44	3	167	6086	-13.54	2.25	0.03
96	SLU 45	3	164	6242	-13.68	2.17	0.02
96	SLU 46	3	171	6215	-13.85	2.24	0.03
96	SLU 47	3	172	6165	-13.82	2.27	0.03
96	SLU 48	3	169	6321	-13.96	2.19	0.02
96	SLU 49	3	175	6294	-14.13	2.26	0.03
96	SLU 50	3	166	6290	-13.82	2.18	0.02
96	SLU 51	3	173	6262	-13.99	2.25	0.03
96	SLU 52	4	183	6755	-15.01	2.59	0.04
96	SLU 53	4	180	6912	-15.16	2.51	0.03
96	SLU 54	4	186	6885	-15.32	2.58	0.04
96	SLU 55	4	187	6835	-15.29	2.62	0.04
96	SLU 56	4	185	6991	-15.43	2.53	0.03
96	SLU 57	4	191	6964	-15.6	2.61	0.04
96	SLU 58	4	182	6960	-15.29	2.52	0.03
96	SLU 59	4	188	6932	-15.46	2.59	0.04
96	SLU 60	4	179	7088	-15.37	2.62	0.04
96	SLU 61	4	185	7061	-15.53	2.69	0.04
96	SLU 62	4	184	7167	-15.65	2.64	0.04
96	SLU 63	4	190	7140	-15.81	2.72	0.04
96	SLU 64	3	170	6678	-14.47	2.46	0.03
96	SLU 65	4	180	6632	-14.74	2.58	0.03
96	SLU 66	4	177	6788	-14.89	2.5	0.03

Nodo	Cont.	Reazione a traslazione			Reazione a rotazione		
Ind.	N.br.	x	y	z	x	y	z
96	SLU 67	4	183	6761	-15.05	2.57	0.03
96	SLU 68	4	185	6711	-15.02	2.6	0.03
96	SLU 69	4	182	6868	-15.16	2.52	0.03
96	SLU 70	4	188	6840	-15.33	2.59	0.03
96	SLU 71	4	179	6836	-15.02	2.51	0.03
96	SLU 72	4	185	6809	-15.19	2.58	0.03
96	SLU 73	5	195	7302	-16.21	2.92	0.04
96	SLU 74	5	193	7458	-16.36	2.84	0.04
96	SLU 75	5	199	7431	-16.52	2.91	0.04
96	SLU 76	5	200	7381	-16.49	2.95	0.04
96	SLU 77	5	197	7538	-16.64	2.87	0.04
96	SLU 78	5	204	7510	-16.8	2.94	0.04
96	SLU 79	5	195	7506	-16.5	2.85	0.04
96	SLU 80	5	201	7479	-16.66	2.92	0.04
96	SLU 81	5	192	7635	-16.57	2.95	0.05
96	SLU 82	5	198	7607	-16.73	3.02	0.05
96	SLU 83	5	197	7714	-16.85	2.98	0.05
96	SLU 84	5	203	7687	-17.01	3.05	0.05
96	SLE RA 1	3	128	5016	-10.86	1.82	0.02
96	SLE RA 2	3	135	4986	-11.05	1.9	0.02
96	SLE RA 3	3	133	5090	-11.14	1.85	0.02
96	SLE RA 4	3	137	5072	-11.25	1.89	0.02
96	SLE RA 5	3	138	5039	-11.23	1.92	0.02
96	SLE RA 6	3	136	5143	-11.33	1.86	0.02
96	SLE RA 7	3	140	5125	-11.44	1.91	0.02
96	SLE RA 8	3	134	5122	-11.24	1.85	0.02
96	SLE RA 9	3	138	5104	-11.35	1.9	0.02
96	SLE RA 10	3	145	5433	-12.03	2.13	0.03
96	SLE RA 11	3	143	5537	-12.12	2.07	0.03
96	SLE RA 12	3	147	5519	-12.23	2.12	0.03
96	SLE RA 13	3	148	5486	-12.21	2.14	0.03
96	SLE RA 14	3	146	5590	-12.31	2.09	0.03
96	SLE RA 15	3	150	5572	-12.42	2.14	0.03
96	SLE RA 16	3	144	5569	-12.22	2.08	0.03
96	SLE RA 17	3	149	5551	-12.33	2.13	0.03
96	SLE RA 18	3	142	5654	-12.27	2.15	0.03
96	SLE RA 19	4	147	5636	-12.38	2.2	0.03
96	SLE RA 20	3	146	5707	-12.45	2.16	0.03
96	SLE RA 21	4	150	5689	-12.56	2.21	0.03
96	SLE FR 1	3	128	5016	-10.86	1.82	0.02
96	SLE FR 2	3	129	5010	-10.9	1.84	0.02
96	SLE FR 3	3	129	5038	-10.94	1.83	0.02
96	SLE FR 4	3	134	5202	-11.32	1.94	0.03
96	SLE FR 5	3	133	5229	-11.36	1.93	0.03
96	SLE FR 6	3	135	5335	-11.56	1.98	0.03
96	SLE QP 1	3	128	5016	-10.86	1.82	0.02
96	SLE QP 2	3	132	5208	-11.28	1.92	0.03
96	SLD 1	4	528	5994	-31.13	3.67	0.04
96	SLD 2	4	528	5994	-31.13	3.67	0.04
96	SLD 3	8	54	5589	-8.47	4.88	0.07
96	SLD 4	8	54	5589	-8.47	4.88	0.07
96	SLD 5	-3	970	6058	-51.6	0.59	-0.02
96	SLD 6	-3	970	6058	-51.6	0.59	-0.02
96	SLD 7	11	-610	4707	23.92	4.66	0.09
96	SLD 8	11	-610	4707	23.92	4.66	0.09
96	SLD 9	-5	875	5708	-46.49	-0.82	-0.04
96	SLD 10	-5	875	5708	-46.49	-0.82	-0.04
96	SLD 11	9	-706	4357	29.03	3.25	0.07
96	SLD 12	9	-706	4357	29.03	3.25	0.07
96	SLD 13	-2	210	4827	-14.1	-1.05	-0.02
96	SLD 14	-2	210	4827	-14.1	-1.05	-0.02
96	SLD 15	2	-264	4422	8.56	0.17	0.01
96	SLD 16	2	-264	4422	8.56	0.17	0.01
96	SLV 1	5	1055	7007	-57.36	5.99	0.06
96	SLV 2	5	1055	7007	-57.36	5.99	0.06
96	SLV 3	15	-51	6059	-4.52	9.03	0.14
96	SLV 4	15	-51	6059	-4.52	9.03	0.14
96	SLV 5	-12	2086	7185	-105.24	-1.48	-0.09
96	SLV 6	-12	2086	7185	-105.24	-1.48	-0.09
96	SLV 7	22	-1600	4026	70.88	8.67	0.18
96	SLV 8	22	-1600	4026	70.88	8.67	0.18
96	SLV 9	-16	1865	6390	-93.45	-4.83	-0.13
96	SLV 10	-16	1865	6390	-93.45	-4.83	-0.13
96	SLV 11	18	-1822	3230	82.67	5.31	0.14
96	SLV 12	18	-1822	3230	82.67	5.31	0.14
96	SLV 13	-9	316	4357	-18.05	-5.19	-0.09
96	SLV 14	-9	316	4357	-18.05	-5.19	-0.09
96	SLV 15	1	-790	3409	34.79	-2.15	-0.01
96	SLV 16	1	-790	3409	34.79	-2.15	-0.01
97	SLU 1	0	-52	433	2.2	-0.02	0.01
97	SLU 2	0	-51	436	2.14	0.06	0.01
97	SLU 3	0	-57	424	2.37	-0.01	0.01
97	SLU 4	0	-56	426	2.33	0.04	0.01
97	SLU 5	0	-53	430	2.25	0.07	0.01
97	SLU 6	0	-59	419	2.48	0	0.01
97	SLU 7	0	-58	421	2.44	0.05	0.01
97	SLU 8	0	-58	422	2.42	0	0.01
97	SLU 9	0	-57	424	2.38	0.05	0.01
97	SLU 10	0	-64	561	2.59	-0.24	0.02
97	SLU 11	0	-69	549	2.82	-0.31	0.02
97	SLU 12	0	-68	551	2.78	-0.26	0.02

Nodo	Cont.	Reazione a traslazione			Reazione a rotazione		
Ind.	N.br.	x	y	z	x	y	z
97	SLU 13	0	-66	555	2.7	-0.23	0.02
97	SLU 14	0	-72	543	2.93	-0.3	0.02
97	SLU 15	0	-71	545	2.89	-0.25	0.02
97	SLU 16	0	-71	546	2.87	-0.3	0.02
97	SLU 17	0	-70	548	2.83	-0.25	0.02
97	SLU 18	0	-71	611	2.84	-0.45	0.03
97	SLU 19	0	-70	613	2.81	-0.4	0.03
97	SLU 20	0	-74	605	2.95	-0.44	0.03
97	SLU 21	0	-73	607	2.92	-0.39	0.03
97	SLU 22	0	-69	439	2.85	-0.08	0.02
97	SLU 23	0	-68	443	2.78	0	0.01
97	SLU 24	0	-74	431	3.01	-0.07	0.01
97	SLU 25	0	-73	433	2.97	-0.02	0.01
97	SLU 26	0	-71	437	2.89	0.01	0.01
97	SLU 27	0	-77	426	3.12	-0.06	0.01
97	SLU 28	0	-76	428	3.08	-0.01	0.01
97	SLU 29	0	-75	428	3.07	-0.06	0.01
97	SLU 30	0	-74	430	3.03	-0.01	0.01
97	SLU 31	0	-81	567	3.23	-0.31	0.03
97	SLU 32	0	-87	556	3.46	-0.37	0.03
97	SLU 33	0	-86	558	3.42	-0.32	0.03
97	SLU 34	0	-83	562	3.34	-0.3	0.03
97	SLU 35	0	-89	550	3.57	-0.36	0.03
97	SLU 36	0	-88	552	3.53	-0.31	0.03
97	SLU 37	0	-88	553	3.52	-0.36	0.03
97	SLU 38	0	-87	555	3.48	-0.32	0.03
97	SLU 39	0	-88	618	3.49	-0.51	0.03
97	SLU 40	0	-87	620	3.45	-0.47	0.03
97	SLU 41	0	-91	612	3.6	-0.5	0.03
97	SLU 42	0	-90	614	3.56	-0.46	0.03
97	SLU 43	0	-62	560	2.64	0	0.01
97	SLU 44	0	-60	563	2.58	0.07	0.01
97	SLU 45	0	-66	552	2.81	0.01	0.01
97	SLU 46	0	-65	554	2.77	0.06	0.01
97	SLU 47	0	-63	558	2.69	0.08	0.01
97	SLU 48	0	-69	546	2.92	0.02	0.01
97	SLU 49	0	-68	548	2.88	0.07	0.01
97	SLU 50	0	-68	549	2.86	0.02	0.01
97	SLU 51	0	-67	551	2.82	0.06	0.01
97	SLU 52	0	-73	688	3.03	-0.23	0.03
97	SLU 53	0	-79	676	3.26	-0.29	0.03
97	SLU 54	0	-78	678	3.22	-0.25	0.03
97	SLU 55	0	-76	682	3.14	-0.22	0.03
97	SLU 56	0	-82	671	3.37	-0.28	0.03
97	SLU 57	0	-81	673	3.33	-0.24	0.03
97	SLU 58	0	-81	674	3.31	-0.28	0.03
97	SLU 59	0	-80	676	3.27	-0.24	0.03
97	SLU 60	0	-81	738	3.28	-0.43	0.03
97	SLU 61	0	-80	740	3.24	-0.39	0.03
97	SLU 62	0	-83	733	3.39	-0.42	0.03
97	SLU 63	0	-82	735	3.35	-0.38	0.03
97	SLU 64	0	-79	567	3.29	-0.06	0.02
97	SLU 65	0	-78	570	3.22	0.01	0.02
97	SLU 66	0	-84	559	3.45	-0.05	0.02
97	SLU 67	0	-83	561	3.41	-0.01	0.02
97	SLU 68	0	-80	565	3.33	0.02	0.02
97	SLU 69	0	-86	553	3.56	-0.04	0.02
97	SLU 70	0	-85	555	3.52	0	0.02
97	SLU 71	0	-85	556	3.51	-0.04	0.02
97	SLU 72	0	-84	558	3.47	0	0.02
97	SLU 73	0	-90	695	3.67	-0.29	0.03
97	SLU 74	0	-96	683	3.9	-0.35	0.03
97	SLU 75	0	-95	685	3.86	-0.31	0.03
97	SLU 76	0	-93	689	3.78	-0.28	0.03
97	SLU 77	0	-99	678	4.01	-0.34	0.03
97	SLU 78	0	-98	680	3.97	-0.3	0.03
97	SLU 79	0	-98	680	3.96	-0.34	0.03
97	SLU 80	0	-97	682	3.92	-0.3	0.03
97	SLU 81	0	-98	745	3.93	-0.49	0.04
97	SLU 82	0	-97	747	3.89	-0.45	0.04
97	SLU 83	0	-101	739	4.04	-0.48	0.04
97	SLU 84	0	-100	741	4	-0.44	0.04
97	SLE RA 1	0	-57	434	2.39	-0.03	0.01
97	SLE RA 2	0	-56	437	2.34	0.02	0.01
97	SLE RA 3	0	-60	429	2.5	-0.03	0.01
97	SLE RA 4	0	-59	430	2.47	0	0.01
97	SLE RA 5	0	-58	433	2.42	0.02	0.01
97	SLE RA 6	0	-62	425	2.57	-0.02	0.01
97	SLE RA 7	0	-61	427	2.54	0.01	0.01
97	SLE RA 8	0	-61	427	2.53	-0.02	0.01
97	SLE RA 9	0	-60	428	2.51	0.01	0.01
97	SLE RA 10	0	-65	520	2.64	-0.19	0.02
97	SLE RA 11	0	-69	512	2.8	-0.23	0.02
97	SLE RA 12	0	-68	513	2.77	-0.2	0.02
97	SLE RA 13	0	-67	516	2.72	-0.18	0.02
97	SLE RA 14	0	-71	508	2.87	-0.22	0.02
97	SLE RA 15	0	-70	510	2.84	-0.19	0.02
97	SLE RA 16	0	-70	510	2.83	-0.22	0.02
97	SLE RA 17	0	-69	512	2.81	-0.19	0.02
97	SLE RA 18	0	-69	553	2.81	-0.32	0.03
97	SLE RA 19	0	-69	555	2.79	-0.29	0.02

Nodo	Cont.	Reazione a traslazione			Reazione a rotazione		
Ind.	N.br.	x	y	z	x	y	z
97	SLE RA 20	0	-71	550	2.89	-0.32	0.03
97	SLE RA 21	0	-71	551	2.86	-0.29	0.02
97	SLE FR 1	0	-57	434	2.39	-0.03	0.01
97	SLE FR 2	0	-57	435	2.38	-0.02	0.01
97	SLE FR 3	0	-58	433	2.42	-0.03	0.01
97	SLE FR 4	0	-61	471	2.51	-0.11	0.02
97	SLE FR 5	0	-62	469	2.54	-0.12	0.02
97	SLE FR 6	0	-63	494	2.6	-0.18	0.02
97	SLE QP 1	0	-57	434	2.39	-0.03	0.01
97	SLE QP 2	0	-61	470	2.51	-0.12	0.02
97	SLD 1	2	7	573	-0.02	2.04	0.01
97	SLD 2	2	7	573	-0.02	2.04	0.01
97	SLD 3	3	-104	402	4.13	2.46	0
97	SLD 4	3	-104	402	4.13	2.46	0
97	SLD 5	0	127	760	-4.55	-0.1	0.02
97	SLD 6	0	127	760	-4.55	-0.1	0.02
97	SLD 7	2	-242	191	9.3	1.28	0
97	SLD 8	2	-242	191	9.3	1.28	0
97	SLD 9	-1	120	749	-4.27	-1.52	0.03
97	SLD 10	-1	120	749	-4.27	-1.52	0.03
97	SLD 11	0	-249	180	9.58	-0.14	0.01
97	SLD 12	0	-249	180	9.58	-0.14	0.01
97	SLD 13	-2	-18	538	0.9	-2.7	0.03
97	SLD 14	-2	-18	538	0.9	-2.7	0.03
97	SLD 15	-2	-129	367	5.05	-2.29	0.03
97	SLD 16	-2	-129	367	5.05	-2.29	0.03
97	SLV 1	5	99	713	-3.46	5.04	-0.01
97	SLV 2	5	99	713	-3.46	5.04	-0.01
97	SLV 3	6	-160	314	6.25	6.06	-0.02
97	SLV 4	6	-160	314	6.25	6.06	-0.02
97	SLV 5	0	379	1148	-14.01	-0.12	0.03
97	SLV 6	0	379	1148	-14.01	-0.12	0.03
97	SLV 7	4	-483	-182	18.36	3.29	-0.02
97	SLV 8	4	-483	-182	18.36	3.29	-0.02
97	SLV 9	-4	361	1122	-13.33	-3.53	0.05
97	SLV 10	-4	361	1122	-13.33	-3.53	0.05
97	SLV 11	1	-501	-208	19.04	-0.12	0
97	SLV 12	1	-501	-208	19.04	-0.12	0
97	SLV 13	-6	38	626	-1.22	-6.31	0.05
97	SLV 14	-6	38	626	-1.22	-6.31	0.05
97	SLV 15	-5	-220	228	8.49	-5.28	0.04
97	SLV 16	-5	-220	228	8.49	-5.28	0.04
98	SLU 1	-1	513	3095	-24.18	-0.04	0
98	SLU 2	-3	730	3366	-34.74	-1.29	0
98	SLU 3	-1	528	3168	-24.88	-0.04	0
98	SLU 4	-2	659	3331	-31.21	-0.79	0
98	SLU 5	-3	741	3414	-35.21	-1.29	0
98	SLU 6	-1	539	3216	-25.36	-0.03	0
98	SLU 7	-2	669	3379	-31.69	-0.79	0
98	SLU 8	-1	534	3191	-25.13	-0.04	0
98	SLU 9	-2	664	3354	-31.46	-0.79	0
98	SLU 10	-3	786	3776	-37.38	-1.29	0
98	SLU 11	-1	583	3578	-27.53	-0.04	0
98	SLU 12	-2	714	3741	-33.86	-0.79	0
98	SLU 13	-3	796	3824	-37.85	-1.29	0
98	SLU 14	-1	594	3626	-28	-0.03	0
98	SLU 15	-2	724	3789	-34.33	-0.79	0
98	SLU 16	-1	589	3601	-27.77	-0.04	0
98	SLU 17	-2	719	3764	-34.1	-0.79	0
98	SLU 18	-1	591	3681	-27.96	-0.04	0
98	SLU 19	-2	722	3843	-34.29	-0.79	0
98	SLU 20	-1	602	3729	-28.43	-0.04	0
98	SLU 21	-2	732	3892	-34.76	-0.79	0
98	SLU 22	-1	569	3467	-26.84	-0.03	0
98	SLU 23	-3	787	3739	-37.39	-1.29	0
98	SLU 24	-1	585	3541	-27.54	-0.03	0
98	SLU 25	-2	715	3704	-33.87	-0.78	0
98	SLU 26	-3	797	3787	-37.86	-1.28	0
98	SLU 27	-1	595	3589	-28.01	-0.02	0
98	SLU 28	-2	726	3752	-34.34	-0.78	0
98	SLU 29	-1	590	3564	-27.78	-0.03	0
98	SLU 30	-2	721	3727	-34.11	-0.78	0
98	SLU 31	-3	842	4149	-40.03	-1.28	0
98	SLU 32	-1	640	3951	-30.18	-0.03	0
98	SLU 33	-2	770	4114	-36.51	-0.78	0
98	SLU 34	-3	852	4197	-40.5	-1.28	0
98	SLU 35	-1	650	3999	-30.65	-0.02	0
98	SLU 36	-2	781	4162	-36.98	-0.78	0
98	SLU 37	-1	645	3974	-30.42	-0.03	0
98	SLU 38	-2	776	4137	-36.75	-0.78	0
98	SLU 39	-1	648	4053	-30.61	-0.03	0
98	SLU 40	-2	779	4216	-36.94	-0.78	0
98	SLU 41	-1	658	4101	-31.09	-0.03	0
98	SLU 42	-2	789	4264	-37.42	-0.78	0
98	SLU 43	-1	647	3896	-30.53	-0.06	0
98	SLU 44	-3	865	4167	-41.08	-1.31	0
98	SLU 45	-1	663	3969	-31.23	-0.05	0
98	SLU 46	-2	793	4132	-37.56	-0.8	0
98	SLU 47	-3	875	4215	-41.55	-1.31	0
98	SLU 48	-1	673	4017	-31.7	-0.05	0
98	SLU 49	-2	804	4180	-38.03	-0.8	0

Nodo	Cont.	Reazione a traslazione			Reazione a rotazione		
Ind.	N.br.	x	y	z	x	y	z
98	SLU 50	-1	668	3992	-31.47	-0.05	0
98	SLU 51	-2	799	4155	-37.8	-0.81	0
98	SLU 52	-3	920	4577	-43.73	-1.31	0
98	SLU 53	-1	718	4379	-33.87	-0.05	0
98	SLU 54	-3	848	4542	-40.2	-0.8	0
98	SLU 55	-3	930	4625	-44.2	-1.31	0
98	SLU 56	-1	728	4427	-34.35	-0.05	0
98	SLU 57	-3	859	4590	-40.68	-0.8	0
98	SLU 58	-1	723	4402	-34.12	-0.05	0
98	SLU 59	-3	854	4565	-40.45	-0.81	0
98	SLU 60	-1	726	4481	-34.31	-0.06	0
98	SLU 61	-3	857	4644	-40.64	-0.81	0
98	SLU 62	-1	736	4529	-34.78	-0.06	0
98	SLU 63	-3	867	4692	-41.11	-0.81	0
98	SLU 64	-1	704	4268	-33.18	-0.05	0
98	SLU 65	-3	921	4540	-43.73	-1.3	0
98	SLU 66	-1	719	4342	-33.88	-0.04	0
98	SLU 67	-3	850	4504	-40.21	-0.79	0
98	SLU 68	-3	932	4588	-44.2	-1.3	0
98	SLU 69	-1	730	4390	-34.35	-0.04	0
98	SLU 70	-3	860	4553	-40.68	-0.79	0
98	SLU 71	-1	724	4365	-34.13	-0.04	0
98	SLU 72	-3	855	4527	-40.46	-0.8	0
98	SLU 73	-4	976	4950	-46.38	-1.3	0
98	SLU 74	-1	774	4752	-36.53	-0.04	0
98	SLU 75	-3	905	4914	-42.86	-0.79	0
98	SLU 76	-4	987	4998	-46.85	-1.3	0
98	SLU 77	-1	785	4800	-37	-0.04	0
98	SLU 78	-3	915	4963	-43.33	-0.79	0
98	SLU 79	-1	780	4775	-36.77	-0.04	0
98	SLU 80	-3	910	4937	-43.1	-0.8	0
98	SLU 81	-1	782	4854	-36.96	-0.05	0
98	SLU 82	-3	913	5017	-43.29	-0.8	0
98	SLU 83	-1	793	4902	-37.43	-0.05	0
98	SLU 84	-3	923	5065	-43.76	-0.8	0
98	SLE RA 1	-1	529	3201	-24.94	-0.04	0
98	SLE RA 2	-2	674	3382	-31.98	-0.87	0
98	SLE RA 3	-1	539	3250	-25.41	-0.04	0
98	SLE RA 4	-2	626	3359	-29.63	-0.54	0
98	SLE RA 5	-2	681	3414	-32.29	-0.87	0
98	SLE RA 6	-1	546	3282	-25.72	-0.03	0
98	SLE RA 7	-2	633	3391	-29.94	-0.54	0
98	SLE RA 8	-1	543	3266	-25.57	-0.04	0
98	SLE RA 9	-2	630	3374	-29.79	-0.54	0
98	SLE RA 10	-2	711	3656	-33.74	-0.87	0
98	SLE RA 11	-1	576	3524	-27.17	-0.04	0
98	SLE RA 12	-2	663	3632	-31.39	-0.54	0
98	SLE RA 13	-2	718	3688	-34.05	-0.87	0
98	SLE RA 14	-1	583	3556	-27.49	-0.03	0
98	SLE RA 15	-2	670	3664	-31.71	-0.54	0
98	SLE RA 16	-1	579	3539	-27.33	-0.04	0
98	SLE RA 17	-2	667	3647	-31.55	-0.54	0
98	SLE RA 18	-1	581	3592	-27.46	-0.04	0
98	SLE RA 19	-2	668	3700	-31.68	-0.54	0
98	SLE RA 20	-1	588	3624	-27.78	-0.04	0
98	SLE RA 21	-2	675	3732	-32	-0.54	0
98	SLE FR 1	-1	529	3201	-24.94	-0.04	0
98	SLE FR 2	-1	558	3237	-26.35	-0.21	0
98	SLE FR 3	-1	532	3214	-25.07	-0.04	0
98	SLE FR 4	-1	574	3355	-27.1	-0.21	0
98	SLE FR 5	-1	547	3331	-25.82	-0.04	0
98	SLE FR 6	-1	555	3397	-26.2	-0.04	0
98	SLE QP 1	-1	529	3201	-24.94	-0.04	0
98	SLE QP 2	-1	545	3318	-25.7	-0.04	0
98	SLD 1	2	962	3794	-45.17	1.47	0
98	SLD 2	2	962	3794	-45.17	1.47	0
98	SLD 3	0	498	3253	-23.24	0.33	0.01
98	SLD 4	0	498	3253	-23.24	0.33	0.01
98	SLD 5	4	1374	4282	-64.8	2.13	0
98	SLD 6	4	1374	4282	-64.8	2.13	0
98	SLD 7	-4	-173	2478	8.3	-1.65	0.01
98	SLD 8	-4	-173	2478	8.3	-1.65	0.01
98	SLD 9	2	1262	4159	-59.69	1.57	-0.01
98	SLD 10	2	1262	4159	-59.69	1.57	-0.01
98	SLD 11	-5	-284	2355	13.4	-2.21	0
98	SLD 12	-5	-284	2355	13.4	-2.21	0
98	SLD 13	-2	591	3384	-28.16	-0.41	-0.01
98	SLD 14	-2	591	3384	-28.16	-0.41	-0.01
98	SLD 15	-4	127	2843	-6.23	-1.55	-0.01
98	SLD 16	-4	127	2843	-6.23	-1.55	-0.01
98	SLV 1	7	1544	4442	-72.29	3.62	0.01
98	SLV 2	7	1544	4442	-72.29	3.62	0.01
98	SLV 3	1	456	3159	-20.85	0.75	0.02
98	SLV 4	1	456	3159	-20.85	0.75	0.02
98	SLV 5	10	2494	5602	-117.69	5.41	-0.01
98	SLV 6	10	2494	5602	-117.69	5.41	-0.01
98	SLV 7	-9	-1132	1325	53.77	-4.15	0.01
98	SLV 8	-9	-1132	1325	53.77	-4.15	0.01
98	SLV 9	7	2221	5312	-105.16	4.07	-0.02
98	SLV 10	7	2221	5312	-105.16	4.07	-0.02
98	SLV 11	-12	-1405	1035	66.29	-5.49	0.01

Nodo	Cont.	Reazione a traslazione			Reazione a rotazione		
Ind.	N.br.	x	y	z	x	y	z
98	SLV 12	-12	-1405	1035	66.29	-5.49	0.01
98	SLV 13	-3	634	3478	-30.54	-0.83	-0.02
98	SLV 14	-3	634	3478	-30.54	-0.83	-0.02
98	SLV 15	-9	-454	2195	20.89	-3.7	-0.01
98	SLV 16	-9	-454	2195	20.89	-3.7	-0.01
99	SLU 1	0	180	704	-6.79	-0.25	0
99	SLU 2	0	214	788	-8.53	0.26	0
99	SLU 3	0	183	696	-6.82	-0.26	0
99	SLU 4	0	203	746	-7.87	0.05	0
99	SLU 5	0	215	781	-8.53	0.26	0
99	SLU 6	0	184	688	-6.82	-0.26	0
99	SLU 7	0	204	739	-7.86	0.04	0
99	SLU 8	0	182	690	-6.79	-0.26	0
99	SLU 9	0	203	740	-7.83	0.05	0
99	SLU 10	0	225	759	-8.78	0.24	0
99	SLU 11	0	194	667	-7.07	-0.28	0
99	SLU 12	0	214	717	-8.12	0.03	0
99	SLU 13	0	226	752	-8.78	0.23	0
99	SLU 14	0	195	660	-7.07	-0.29	0
99	SLU 15	0	215	710	-8.11	0.02	0
99	SLU 16	0	194	661	-7.04	-0.29	0
99	SLU 17	0	214	711	-8.08	0.02	0
99	SLU 18	0	196	663	-7.15	-0.28	0
99	SLU 19	0	216	713	-8.19	0.02	0
99	SLU 20	0	197	656	-7.15	-0.29	0
99	SLU 21	0	217	706	-8.19	0.02	0
99	SLU 22	0	191	677	-7.03	-0.27	0
99	SLU 23	0	225	760	-8.77	0.24	0
99	SLU 24	0	193	668	-7.06	-0.28	0
99	SLU 25	0	213	718	-8.1	0.03	0
99	SLU 26	0	226	753	-8.76	0.23	0
99	SLU 27	0	194	661	-7.06	-0.29	0
99	SLU 28	0	214	711	-8.1	0.02	0
99	SLU 29	0	193	662	-7.02	-0.29	0
99	SLU 30	0	213	712	-8.06	0.02	0
99	SLU 31	0	236	731	-9.01	0.21	0
99	SLU 32	0	204	639	-7.31	-0.31	0
99	SLU 33	0	224	689	-8.35	0	0
99	SLU 34	0	237	724	-9.01	0.21	0
99	SLU 35	0	205	632	-7.31	-0.31	0
99	SLU 36	0	225	682	-8.35	0	0
99	SLU 37	0	204	633	-7.27	-0.31	0
99	SLU 38	0	224	684	-8.31	0	0
99	SLU 39	0	207	635	-7.39	-0.31	0
99	SLU 40	0	227	686	-8.43	0	0
99	SLU 41	0	208	628	-7.38	-0.31	0
99	SLU 42	0	228	678	-8.42	-0.01	0
99	SLU 43	0	231	925	-8.75	-0.32	0
99	SLU 44	0	265	1009	-10.49	0.2	0
99	SLU 45	0	233	916	-8.78	-0.32	0
99	SLU 46	0	253	967	-9.82	-0.02	0
99	SLU 47	0	266	1002	-10.48	0.19	0
99	SLU 48	0	234	909	-8.78	-0.33	0
99	SLU 49	0	254	959	-9.82	-0.02	0
99	SLU 50	0	233	911	-8.74	-0.33	0
99	SLU 51	0	253	961	-9.78	-0.02	0
99	SLU 52	0	276	980	-10.74	0.17	0
99	SLU 53	0	244	888	-9.03	-0.35	0
99	SLU 54	0	264	938	-10.07	-0.04	0
99	SLU 55	0	277	973	-10.73	0.17	0
99	SLU 56	0	245	880	-9.03	-0.35	0
99	SLU 57	0	265	931	-10.07	-0.05	0
99	SLU 58	0	244	882	-8.99	-0.35	0
99	SLU 59	0	264	932	-10.03	-0.04	0
99	SLU 60	0	247	884	-9.11	-0.35	0
99	SLU 61	0	267	934	-10.15	-0.04	0
99	SLU 62	0	248	877	-9.1	-0.36	0
99	SLU 63	0	268	927	-10.14	-0.05	0
99	SLU 64	0	242	897	-8.99	-0.34	0
99	SLU 65	0	275	981	-10.72	0.17	0
99	SLU 66	0	244	889	-9.02	-0.35	0
99	SLU 67	0	264	939	-10.06	-0.04	0
99	SLU 68	0	276	974	-10.72	0.17	0
99	SLU 69	0	245	881	-9.01	-0.35	0
99	SLU 70	0	265	932	-10.06	-0.05	0
99	SLU 71	0	244	883	-8.98	-0.35	0
99	SLU 72	0	264	933	-10.02	-0.04	0
99	SLU 73	0	286	952	-10.97	0.15	0
99	SLU 74	0	255	860	-9.27	-0.37	0
99	SLU 75	0	275	910	-10.31	-0.06	0
99	SLU 76	0	287	945	-10.97	0.14	0
99	SLU 77	0	256	853	-9.26	-0.38	0
99	SLU 78	0	276	903	-10.31	-0.07	0
99	SLU 79	0	255	854	-9.23	-0.38	0
99	SLU 80	0	275	904	-10.27	-0.07	0
99	SLU 81	0	257	856	-9.34	-0.37	0
99	SLU 82	0	278	906	-10.38	-0.07	0
99	SLU 83	0	258	849	-9.34	-0.38	0
99	SLU 84	0	279	899	-10.38	-0.07	0
99	SLE RA 1	0	183	696	-6.86	-0.26	0
99	SLE RA 2	0	206	752	-8.02	0.09	0

Nodo	Cont.	Reazione a traslazione			Reazione a rotazione		
Ind.	N.br.	x	y	z	x	y	z
99	SLE RA 3	0	185	691	-6.88	-0.26	0
99	SLE RA 4	0	198	724	-7.58	-0.06	0
99	SLE RA 5	0	207	747	-8.02	0.08	0
99	SLE RA 6	0	186	686	-6.88	-0.27	0
99	SLE RA 7	0	199	719	-7.57	-0.06	0
99	SLE RA 8	0	185	687	-6.86	-0.26	0
99	SLE RA 9	0	198	720	-7.55	-0.06	0
99	SLE RA 10	0	213	733	-8.18	0.07	0
99	SLE RA 11	0	192	671	-7.05	-0.28	0
99	SLE RA 12	0	206	705	-7.74	-0.07	0
99	SLE RA 13	0	214	728	-8.18	0.07	0
99	SLE RA 14	0	193	667	-7.05	-0.28	0
99	SLE RA 15	0	206	700	-7.74	-0.08	0
99	SLE RA 16	0	192	668	-7.02	-0.28	0
99	SLE RA 17	0	206	701	-7.72	-0.08	0
99	SLE RA 18	0	194	669	-7.1	-0.28	0
99	SLE RA 19	0	207	702	-7.79	-0.07	0
99	SLE RA 20	0	195	664	-7.1	-0.28	0
99	SLE RA 21	0	208	698	-7.79	-0.08	0
99	SLE FR 1	0	183	696	-6.86	-0.26	0
99	SLE FR 2	0	188	707	-7.09	-0.19	0
99	SLE FR 3	0	184	694	-6.86	-0.26	0
99	SLE FR 4	0	191	699	-7.16	-0.19	0
99	SLE FR 5	0	187	686	-6.93	-0.26	0
99	SLE FR 6	0	189	683	-6.98	-0.27	0
99	SLE QP 1	0	183	696	-6.86	-0.26	0
99	SLE QP 2	0	187	688	-6.93	-0.26	0
99	SLD 1	56	244	1165	-16.35	52.41	0.25
99	SLD 2	56	244	1165	-16.35	52.41	0.25
99	SLD 3	64	-2	576	-3.88	60.38	0.28
99	SLD 4	64	-2	576	-3.88	60.38	0.28
99	SLD 5	5	578	1725	-28.67	3.44	0.02
99	SLD 6	5	578	1725	-28.67	3.44	0.02
99	SLD 7	31	-244	-239	12.9	30.03	0.14
99	SLD 8	31	-244	-239	12.9	30.03	0.14
99	SLD 9	-31	617	1615	-26.76	-30.56	-0.14
99	SLD 10	-31	617	1615	-26.76	-30.56	-0.14
99	SLD 11	-5	-205	-349	14.81	-3.96	-0.02
99	SLD 12	-5	-205	-349	14.81	-3.96	-0.02
99	SLD 13	-64	376	800	-9.99	-60.91	-0.28
99	SLD 14	-64	376	800	-9.99	-60.91	-0.28
99	SLD 15	-56	129	211	2.48	-52.93	-0.25
99	SLD 16	-56	129	211	2.48	-52.93	-0.25
99	SLV 1	139	321	1795	-28.92	129.45	0.61
99	SLV 2	139	321	1795	-28.92	129.45	0.61
99	SLV 3	158	-255	419	0.19	149.25	0.7
99	SLV 4	158	-255	419	0.19	149.25	0.7
99	SLV 5	12	1100	3107	-57.68	8.61	0.04
99	SLV 6	12	1100	3107	-57.68	8.61	0.04
99	SLV 7	77	-819	-1479	39.36	74.64	0.35
99	SLV 8	77	-819	-1479	39.36	74.64	0.35
99	SLV 9	-77	1193	2855	-53.22	-75.16	-0.35
99	SLV 10	-77	1193	2855	-53.22	-75.16	-0.35
99	SLV 11	-12	-727	-1730	43.82	-9.13	-0.05
99	SLV 12	-12	-727	-1730	43.82	-9.13	-0.05
99	SLV 13	-158	629	957	-14.05	-149.78	-0.7
99	SLV 14	-158	629	957	-14.05	-149.78	-0.7
99	SLV 15	-139	53	-419	15.06	-129.97	-0.61
99	SLV 16	-139	53	-419	15.06	-129.97	-0.61
100	SLU 1	0	546	4641	-37.41	-0.33	0
100	SLU 2	0	737	5264	-47.78	-0.24	0
100	SLU 3	0	563	4762	-38.49	-0.33	0
100	SLU 4	0	677	5135	-44.72	-0.28	0
100	SLU 5	0	748	5343	-48.52	-0.24	0
100	SLU 6	0	574	4841	-39.23	-0.34	0
100	SLU 7	0	689	5214	-45.46	-0.28	0
100	SLU 8	0	569	4799	-38.89	-0.33	0
100	SLU 9	0	683	5173	-45.11	-0.28	0
100	SLU 10	0	805	5830	-52.47	-0.29	0
100	SLU 11	0	631	5329	-43.18	-0.38	0
100	SLU 12	0	746	5702	-49.41	-0.33	0
100	SLU 13	0	817	5909	-53.21	-0.29	0
100	SLU 14	0	642	5407	-43.92	-0.38	0
100	SLU 15	0	757	5781	-50.14	-0.33	0
100	SLU 16	0	637	5366	-43.57	-0.38	0
100	SLU 17	0	752	5739	-49.8	-0.33	0
100	SLU 18	0	644	5451	-44.1	-0.4	0
100	SLU 19	0	758	5824	-50.33	-0.34	0
100	SLU 20	0	655	5530	-44.84	-0.4	0
100	SLU 21	0	770	5903	-51.07	-0.35	0
100	SLU 22	0	613	5182	-41.95	-0.37	0
100	SLU 23	0	804	5804	-52.32	-0.29	0
100	SLU 24	0	630	5303	-43.04	-0.38	0
100	SLU 25	0	744	5676	-49.26	-0.33	0
100	SLU 26	0	815	5883	-53.06	-0.29	0
100	SLU 27	0	641	5382	-43.77	-0.38	0
100	SLU 28	0	756	5755	-50	-0.33	0
100	SLU 29	0	636	5340	-43.43	-0.38	0
100	SLU 30	0	750	5713	-49.65	-0.33	0
100	SLU 31	0	872	6371	-57.01	-0.34	0
100	SLU 32	0	698	5869	-47.72	-0.43	0

Nodo	Cont.	Reazione a traslazione			Reazione a rotazione		
Ind.	N.br.	x	y	z	x	y	z
100	SLU 33	0	812	6243	-53.95	-0.38	0
100	SLU 34	0	884	6450	-57.75	-0.34	0
100	SLU 35	0	709	5948	-48.46	-0.43	0
100	SLU 36	0	824	6321	-54.69	-0.38	0
100	SLU 37	0	704	5906	-48.11	-0.43	0
100	SLU 38	0	819	6280	-54.34	-0.37	0
100	SLU 39	0	711	5991	-48.64	-0.44	0
100	SLU 40	0	825	6365	-54.87	-0.39	0
100	SLU 41	0	722	6070	-49.38	-0.44	0
100	SLU 42	0	837	6444	-55.61	-0.39	0
100	SLU 43	0	687	5849	-47.07	-0.41	0
100	SLU 44	0	878	6471	-57.45	-0.32	0
100	SLU 45	0	704	5969	-48.16	-0.42	0
100	SLU 46	0	818	6343	-54.38	-0.36	0
100	SLU 47	0	889	6550	-58.19	-0.33	0
100	SLU 48	0	715	6048	-48.9	-0.42	0
100	SLU 49	0	829	6421	-55.12	-0.37	0
100	SLU 50	0	710	6006	-48.55	-0.41	0
100	SLU 51	0	824	6380	-54.78	-0.36	0
100	SLU 52	0	946	7037	-62.13	-0.37	0
100	SLU 53	0	772	6536	-52.85	-0.46	0
100	SLU 54	0	886	6909	-59.07	-0.41	0
100	SLU 55	0	958	7116	-62.87	-0.37	0
100	SLU 56	0	783	6615	-53.58	-0.47	0
100	SLU 57	0	898	6988	-59.81	-0.42	0
100	SLU 58	0	778	6573	-53.24	-0.46	0
100	SLU 59	0	893	6946	-59.46	-0.41	0
100	SLU 60	0	785	6658	-53.77	-0.48	0
100	SLU 61	0	899	7031	-59.99	-0.43	0
100	SLU 62	0	796	6737	-54.51	-0.48	0
100	SLU 63	0	911	7110	-60.73	-0.43	0
100	SLU 64	0	754	6389	-51.61	-0.45	0
100	SLU 65	0	945	7011	-61.99	-0.37	0
100	SLU 66	0	771	6510	-52.7	-0.46	0
100	SLU 67	0	885	6883	-58.93	-0.41	0
100	SLU 68	0	956	7090	-62.73	-0.37	0
100	SLU 69	0	782	6589	-53.44	-0.46	0
100	SLU 70	0	896	6962	-59.66	-0.41	0
100	SLU 71	0	777	6547	-53.09	-0.46	0
100	SLU 72	0	891	6920	-59.32	-0.41	0
100	SLU 73	0	1013	7578	-66.68	-0.42	0
100	SLU 74	0	839	7076	-57.39	-0.51	0
100	SLU 75	0	953	7450	-63.61	-0.46	0
100	SLU 76	0	1025	7657	-67.41	-0.42	0
100	SLU 77	0	850	7155	-58.13	-0.51	0
100	SLU 78	0	965	7529	-64.35	-0.46	0
100	SLU 79	0	845	7113	-57.78	-0.51	0
100	SLU 80	0	960	7487	-64	-0.46	0
100	SLU 81	0	852	7198	-58.31	-0.52	0
100	SLU 82	0	966	7572	-64.53	-0.47	0
100	SLU 83	0	863	7277	-59.05	-0.53	0
100	SLU 84	0	978	7651	-65.27	-0.48	0
100	SLE RA 1	0	565	4796	-38.71	-0.34	0
100	SLE RA 2	0	693	5211	-45.62	-0.28	0
100	SLE RA 3	0	576	4876	-39.43	-0.34	0
100	SLE RA 4	0	653	5125	-43.58	-0.31	0
100	SLE RA 5	0	700	5263	-46.11	-0.28	0
100	SLE RA 6	0	584	4929	-39.92	-0.35	0
100	SLE RA 7	0	660	5178	-44.07	-0.31	0
100	SLE RA 8	0	581	4901	-39.69	-0.34	0
100	SLE RA 9	0	657	5150	-43.84	-0.31	0
100	SLE RA 10	0	738	5588	-48.75	-0.31	0
100	SLE RA 11	0	622	5254	-42.55	-0.38	0
100	SLE RA 12	0	698	5503	-46.7	-0.34	0
100	SLE RA 13	0	746	5641	-49.24	-0.32	0
100	SLE RA 14	0	630	5307	-43.05	-0.38	0
100	SLE RA 15	0	706	5555	-47.2	-0.34	0
100	SLE RA 16	0	626	5279	-42.82	-0.38	0
100	SLE RA 17	0	702	5528	-46.96	-0.34	0
100	SLE RA 18	0	631	5335	-43.17	-0.39	0
100	SLE RA 19	0	707	5584	-47.32	-0.35	0
100	SLE RA 20	0	638	5388	-43.66	-0.39	0
100	SLE RA 21	0	714	5637	-47.81	-0.35	0
100	SLE FR 1	0	565	4796	-38.71	-0.34	0
100	SLE FR 2	0	591	4879	-40.09	-0.33	0
100	SLE FR 3	0	568	4817	-38.9	-0.34	0
100	SLE FR 4	0	610	5041	-41.43	-0.34	0
100	SLE FR 5	0	588	4979	-40.24	-0.35	0
100	SLE FR 6	0	598	5066	-40.94	-0.36	0
100	SLE QP 1	0	565	4796	-38.71	-0.34	0
100	SLE QP 2	0	585	4958	-40.04	-0.35	0
100	SLD 1	-4	595	5043	-40.89	2.07	-0.01
100	SLD 2	-4	595	5043	-40.89	2.07	-0.01
100	SLD 3	-3	271	3800	-22.26	2.58	-0.01
100	SLD 4	-3	271	3800	-22.26	2.58	-0.01
100	SLD 5	-3	1079	6870	-68.56	-0.41	-0.01
100	SLD 6	-3	1079	6870	-68.56	-0.41	-0.01
100	SLD 7	0	0	2724	-6.44	1.31	0
100	SLD 8	0	0	2724	-6.44	1.31	0
100	SLD 9	-1	1170	7191	-73.65	-2.01	0
100	SLD 10	-1	1170	7191	-73.65	-2.01	0

Nodo	Cont.	Reazione a traslazione			Reazione a rotazione		
Ind.	N.br.	x	y	z	x	y	z
100	SLD 11	2	91	3046	-11.53	-0.3	0.01
100	SLD 12	2	91	3046	-11.53	-0.3	0.01
100	SLD 13	2	899	6116	-57.83	-3.29	0.01
100	SLD 14	2	899	6116	-57.83	-3.29	0.01
100	SLD 15	3	575	4872	-39.2	-2.77	0.01
100	SLD 16	3	575	4872	-39.2	-2.77	0.01
100	SLV 1	-8	597	5116	-41.37	5.32	-0.03
100	SLV 2	-8	597	5116	-41.37	5.32	-0.03
100	SLV 3	-6	-162	2199	2.32	6.57	-0.02
100	SLV 4	-6	-162	2199	2.32	6.57	-0.02
100	SLV 5	-6	1741	9429	-106.72	-0.55	-0.03
100	SLV 6	-6	1741	9429	-106.72	-0.55	-0.03
100	SLV 7	1	-791	-294	38.94	3.62	0.01
100	SLV 8	1	-791	-294	38.94	3.62	0.01
100	SLV 9	-2	1961	10209	-119.03	-4.33	-0.01
100	SLV 10	-2	1961	10209	-119.03	-4.33	-0.01
100	SLV 11	6	-571	486	26.63	-0.16	0.02
100	SLV 12	6	-571	486	26.63	-0.16	0.02
100	SLV 13	6	1332	7716	-82.41	-7.28	0.02
100	SLV 14	6	1332	7716	-82.41	-7.28	0.02
100	SLV 15	8	573	4799	-38.71	-6.03	0.03
100	SLV 16	8	573	4799	-38.71	-6.03	0.03
101	SLU 1	1	46	4705	-7.87	1.54	0
101	SLU 2	1	41	4696	-7.61	1.47	0
101	SLU 3	1	54	4821	-8.31	1.61	0
101	SLU 4	1	51	4816	-8.16	1.57	0
101	SLU 5	1	46	4779	-7.94	1.53	0
101	SLU 6	1	60	4904	-8.64	1.67	0
101	SLU 7	1	57	4898	-8.48	1.63	0
101	SLU 8	1	58	4871	-8.53	1.66	0
101	SLU 9	1	55	4865	-8.37	1.62	0
101	SLU 10	1	39	5385	-8.23	1.65	0
101	SLU 11	1	52	5510	-8.93	1.79	0
101	SLU 12	1	49	5504	-8.77	1.75	0
101	SLU 13	1	44	5467	-8.56	1.71	0
101	SLU 14	2	58	5592	-9.26	1.85	0
101	SLU 15	1	55	5587	-9.1	1.81	0
101	SLU 16	2	56	5559	-9.15	1.83	0
101	SLU 17	1	53	5554	-8.99	1.79	0
101	SLU 18	1	44	5689	-8.76	1.79	0
101	SLU 19	1	40	5683	-8.6	1.75	0
101	SLU 20	1	49	5771	-9.08	1.85	0
101	SLU 21	1	46	5766	-8.93	1.81	0
101	SLU 22	1	52	5250	-8.65	1.66	0
101	SLU 23	1	46	5241	-8.39	1.59	0
101	SLU 24	1	60	5366	-9.08	1.73	0
101	SLU 25	1	56	5361	-8.93	1.69	0
101	SLU 26	1	52	5324	-8.71	1.65	0
101	SLU 27	1	65	5449	-9.41	1.79	0
101	SLU 28	1	62	5444	-9.26	1.75	0
101	SLU 29	1	63	5416	-9.3	1.78	0
101	SLU 30	1	60	5411	-9.15	1.74	0
101	SLU 31	1	44	5930	-9	1.77	0
101	SLU 32	1	58	6055	-9.7	1.91	0
101	SLU 33	1	54	6049	-9.54	1.87	0
101	SLU 34	1	50	6013	-9.33	1.83	0
101	SLU 35	2	63	6138	-10.03	1.97	0
101	SLU 36	1	60	6132	-9.87	1.93	0
101	SLU 37	1	61	6104	-9.92	1.95	0
101	SLU 38	1	58	6099	-9.76	1.91	0
101	SLU 39	1	49	6234	-9.53	1.91	0
101	SLU 40	1	45	6228	-9.37	1.87	0
101	SLU 41	1	55	6317	-9.85	1.97	0
101	SLU 42	1	51	6311	-9.7	1.93	0
101	SLU 43	2	59	5930	-9.97	1.96	0
101	SLU 44	2	53	5921	-9.71	1.89	0
101	SLU 45	2	66	6046	-10.41	2.03	0
101	SLU 46	2	63	6040	-10.25	1.99	0
101	SLU 47	2	58	6003	-10.04	1.95	0
101	SLU 48	2	72	6128	-10.74	2.09	0
101	SLU 49	2	69	6123	-10.58	2.05	0
101	SLU 50	2	70	6095	-10.63	2.08	0
101	SLU 51	2	67	6090	-10.47	2.04	0
101	SLU 52	2	51	6609	-10.33	2.07	0
101	SLU 53	2	64	6734	-11.03	2.21	0
101	SLU 54	2	61	6729	-10.87	2.17	0
101	SLU 55	2	56	6692	-10.66	2.13	0
101	SLU 56	2	70	6817	-11.36	2.27	0
101	SLU 57	2	67	6812	-11.2	2.23	0
101	SLU 58	2	68	6784	-11.24	2.25	0
101	SLU 59	2	65	6778	-11.09	2.21	0
101	SLU 60	2	56	6913	-10.85	2.21	0
101	SLU 61	2	52	6908	-10.7	2.17	0
101	SLU 62	2	62	6996	-11.18	2.27	0
101	SLU 63	2	58	6991	-11.02	2.23	0
101	SLU 64	2	64	6475	-10.74	2.08	0
101	SLU 65	2	58	6466	-10.48	2.01	0
101	SLU 66	2	72	6591	-11.18	2.15	0
101	SLU 67	2	68	6585	-11.03	2.11	0
101	SLU 68	2	64	6549	-10.81	2.07	0
101	SLU 69	2	78	6674	-11.51	2.21	0

Nodo	Cont.	Reazione a traslazione			Reazione a rotazione		
Ind.	N.br.	x	y	z	x	y	z
101	SLU 70	2	74	6668	-11.35	2.17	0
101	SLU 71	2	76	6640	-11.4	2.2	0
101	SLU 72	2	72	6635	-11.24	2.16	0
101	SLU 73	2	56	7154	-11.1	2.19	0
101	SLU 74	2	70	7279	-11.8	2.33	0
101	SLU 75	2	66	7274	-11.64	2.29	0
101	SLU 76	2	62	7237	-11.43	2.25	0
101	SLU 77	2	76	7362	-12.13	2.39	0
101	SLU 78	2	72	7357	-11.97	2.35	0
101	SLU 79	2	74	7329	-12.02	2.37	0
101	SLU 80	2	70	7324	-11.86	2.33	0
101	SLU 81	2	61	7458	-11.62	2.33	0
101	SLU 82	2	57	7453	-11.47	2.29	0
101	SLU 83	2	67	7541	-11.95	2.39	0
101	SLU 84	2	63	7536	-11.8	2.35	0
101	SLE RA 1	1	48	4861	-8.1	1.57	0
101	SLE RA 2	1	44	4855	-7.92	1.53	0
101	SLE RA 3	1	53	4938	-8.39	1.62	0
101	SLE RA 4	1	51	4934	-8.28	1.6	0
101	SLE RA 5	1	48	4910	-8.14	1.57	0
101	SLE RA 6	1	57	4993	-8.61	1.66	0
101	SLE RA 7	1	55	4990	-8.5	1.64	0
101	SLE RA 8	1	56	4971	-8.53	1.65	0
101	SLE RA 9	1	53	4968	-8.43	1.63	0
101	SLE RA 10	1	43	5314	-8.33	1.65	0
101	SLE RA 11	1	52	5397	-8.8	1.74	0
101	SLE RA 12	1	49	5394	-8.69	1.71	0
101	SLE RA 13	1	47	5369	-8.55	1.68	0
101	SLE RA 14	1	56	5452	-9.02	1.78	0
101	SLE RA 15	1	53	5449	-8.91	1.75	0
101	SLE RA 16	1	54	5430	-8.94	1.77	0
101	SLE RA 17	1	52	5427	-8.84	1.74	0
101	SLE RA 18	1	46	5517	-8.68	1.74	0
101	SLE RA 19	1	44	5513	-8.58	1.71	0
101	SLE RA 20	1	50	5572	-8.9	1.78	0
101	SLE RA 21	1	48	5568	-8.8	1.75	0
101	SLE FR 1	1	48	4861	-8.1	1.57	0
101	SLE FR 2	1	47	4860	-8.06	1.57	0
101	SLE FR 3	1	50	4883	-8.18	1.59	0
101	SLE FR 4	1	47	5056	-8.24	1.61	0
101	SLE FR 5	1	49	5080	-8.36	1.64	0
101	SLE FR 6	1	47	5189	-8.39	1.66	0
101	SLE QP 1	1	48	4861	-8.1	1.57	0
101	SLE QP 2	1	47	5057	-8.27	1.62	0
101	SLD 1	4	158	4799	-12.85	4.89	0
101	SLD 2	4	158	4799	-12.85	4.89	0
101	SLD 3	1	-327	4475	10.52	3.73	0
101	SLD 4	1	-327	4475	10.52	3.73	0
101	SLD 5	6	816	5472	-45.09	4.37	0
101	SLD 6	6	816	5472	-45.09	4.37	0
101	SLD 7	-2	-800	4390	32.81	0.49	0
101	SLD 8	-2	-800	4390	32.81	0.49	0
101	SLD 9	5	895	5725	-49.35	2.75	0
101	SLD 10	5	895	5725	-49.35	2.75	0
101	SLD 11	-3	-721	4643	28.54	-1.12	0
101	SLD 12	-3	-721	4643	28.54	-1.12	0
101	SLD 13	2	421	5640	-27.06	-0.48	-0.01
101	SLD 14	2	421	5640	-27.06	-0.48	-0.01
101	SLD 15	-1	-63	5316	-3.69	-1.65	-0.01
101	SLD 16	-1	-63	5316	-3.69	-1.65	-0.01
101	SLV 1	6	307	4479	-19.08	9.37	0.01
101	SLV 2	6	307	4479	-19.08	9.37	0.01
101	SLV 3	1	-824	3720	35.44	6.65	0.01
101	SLV 4	1	-824	3720	35.44	6.65	0.01
101	SLV 5	11	1840	6036	-94.2	8.08	0
101	SLV 6	11	1840	6036	-94.2	8.08	0
101	SLV 7	-7	-1929	3504	87.53	-1	0
101	SLV 8	-7	-1929	3504	87.53	-1	0
101	SLV 9	10	2024	6611	-104.07	4.24	0
101	SLV 10	10	2024	6611	-104.07	4.24	0
101	SLV 11	-9	-1746	4079	77.66	-4.83	-0.01
101	SLV 12	-9	-1746	4079	77.66	-4.83	-0.01
101	SLV 13	2	918	6395	-51.98	-3.4	-0.01
101	SLV 14	2	918	6395	-51.98	-3.4	-0.01
101	SLV 15	-4	-213	5636	2.53	-6.13	-0.01
101	SLV 16	-4	-213	5636	2.53	-6.13	-0.01
102	SLU 1	1	-12	4535	0.73	1.79	0.01
102	SLU 2	2	-5	4503	0.42	2.01	0.01
102	SLU 3	1	-7	4643	0.57	1.84	0.01
102	SLU 4	2	-3	4624	0.38	1.97	0.01
102	SLU 5	2	-3	4580	0.33	2.04	0.01
102	SLU 6	1	-5	4720	0.48	1.87	0.01
102	SLU 7	2	-1	4701	0.3	2	0.01
102	SLU 8	1	-7	4688	0.56	1.85	0.01
102	SLU 9	2	-3	4669	0.37	1.98	0.01
102	SLU 10	2	-5	5127	0.53	2.26	0.02
102	SLU 11	2	-8	5267	0.68	2.08	0.01
102	SLU 12	2	-4	5248	0.49	2.22	0.01
102	SLU 13	2	-3	5204	0.44	2.29	0.02
102	SLU 14	2	-6	5343	0.59	2.11	0.01
102	SLU 15	2	-2	5325	0.4	2.25	0.01

Nodo	Cont.	Reazione a traslazione			Reazione a rotazione		
Ind.	N.br.	x	y	z	x	y	z
102	SLU 16	2	-8	5312	0.66	2.1	0.01
102	SLU 17	2	-3	5293	0.48	2.23	0.01
102	SLU 18	2	-12	5426	0.89	2.14	0.01
102	SLU 19	2	-8	5407	0.7	2.28	0.02
102	SLU 20	2	-10	5502	0.8	2.17	0.01
102	SLU 21	2	-6	5483	0.61	2.31	0.02
102	SLU 22	2	-11	5045	0.81	2.1	0.01
102	SLU 23	2	-5	5014	0.49	2.33	0.02
102	SLU 24	2	-7	5154	0.64	2.15	0.01
102	SLU 25	2	-3	5135	0.46	2.28	0.01
102	SLU 26	2	-2	5090	0.4	2.36	0.02
102	SLU 27	2	-5	5230	0.56	2.18	0.01
102	SLU 28	2	-1	5212	0.37	2.31	0.01
102	SLU 29	2	-7	5198	0.63	2.16	0.01
102	SLU 30	2	-3	5180	0.44	2.3	0.01
102	SLU 31	2	-5	5638	0.6	2.57	0.02
102	SLU 32	2	-8	5777	0.75	2.4	0.02
102	SLU 33	2	-4	5759	0.56	2.53	0.02
102	SLU 34	2	-3	5714	0.51	2.6	0.02
102	SLU 35	2	-5	5854	0.66	2.43	0.02
102	SLU 36	2	-1	5835	0.47	2.56	0.02
102	SLU 37	2	-7	5822	0.73	2.41	0.02
102	SLU 38	2	-3	5803	0.55	2.54	0.02
102	SLU 39	2	-12	5936	0.96	2.46	0.02
102	SLU 40	2	-8	5917	0.77	2.59	0.02
102	SLU 41	2	-10	6013	0.87	2.49	0.02
102	SLU 42	2	-6	5994	0.68	2.62	0.02
102	SLU 43	1	-15	5720	0.93	2.22	0.01
102	SLU 44	2	-8	5689	0.62	2.44	0.01
102	SLU 45	1	-11	5828	0.77	2.27	0.01
102	SLU 46	2	-7	5810	0.58	2.4	0.01
102	SLU 47	2	-6	5765	0.53	2.47	0.01
102	SLU 48	1	-9	5905	0.68	2.3	0.01
102	SLU 49	2	-5	5886	0.49	2.43	0.01
102	SLU 50	1	-11	5873	0.75	2.28	0.01
102	SLU 51	2	-7	5854	0.56	2.41	0.01
102	SLU 52	2	-9	6312	0.72	2.69	0.02
102	SLU 53	2	-11	6452	0.87	2.51	0.01
102	SLU 54	2	-7	6433	0.69	2.65	0.02
102	SLU 55	2	-7	6389	0.63	2.72	0.02
102	SLU 56	2	-9	6529	0.79	2.54	0.01
102	SLU 57	2	-5	6510	0.6	2.68	0.02
102	SLU 58	2	-11	6497	0.86	2.53	0.01
102	SLU 59	2	-7	6478	0.67	2.66	0.02
102	SLU 60	2	-16	6611	1.08	2.57	0.02
102	SLU 61	2	-12	6592	0.89	2.71	0.02
102	SLU 62	2	-14	6688	0.99	2.6	0.02
102	SLU 63	2	-9	6669	0.81	2.74	0.02
102	SLU 64	2	-15	6230	1	2.53	0.01
102	SLU 65	2	-8	6199	0.69	2.76	0.02
102	SLU 66	2	-11	6339	0.84	2.58	0.01
102	SLU 67	2	-7	6320	0.65	2.71	0.02
102	SLU 68	2	-6	6276	0.6	2.79	0.02
102	SLU 69	2	-8	6416	0.75	2.61	0.01
102	SLU 70	2	-4	6397	0.56	2.74	0.02
102	SLU 71	2	-10	6384	0.82	2.59	0.01
102	SLU 72	2	-6	6365	0.64	2.73	0.02
102	SLU 73	3	-9	6823	0.79	3	0.02
102	SLU 74	2	-11	6963	0.95	2.83	0.02
102	SLU 75	3	-7	6944	0.76	2.96	0.02
102	SLU 76	3	-6	6899	0.71	3.03	0.02
102	SLU 77	2	-9	7039	0.86	2.86	0.02
102	SLU 78	3	-5	7021	0.67	2.99	0.02
102	SLU 79	2	-11	7007	0.93	2.84	0.02
102	SLU 80	3	-7	6989	0.74	2.97	0.02
102	SLU 81	2	-15	7121	1.15	2.89	0.02
102	SLU 82	3	-11	7103	0.97	3.02	0.02
102	SLU 83	2	-13	7198	1.06	2.92	0.02
102	SLU 84	3	-9	7179	0.88	3.05	0.02
102	SLE RA 1	1	-11	4680	0.75	1.88	0.01
102	SLE RA 2	2	-7	4660	0.55	2.03	0.01
102	SLE RA 3	1	-9	4753	0.65	1.91	0.01
102	SLE RA 4	2	-6	4740	0.52	2	0.01
102	SLE RA 5	2	-6	4711	0.49	2.05	0.01
102	SLE RA 6	1	-7	4804	0.59	1.93	0.01
102	SLE RA 7	2	-5	4791	0.46	2.02	0.01
102	SLE RA 8	1	-8	4783	0.64	1.92	0.01
102	SLE RA 9	2	-6	4770	0.51	2.01	0.01
102	SLE RA 10	2	-7	5075	0.62	2.19	0.01
102	SLE RA 11	2	-9	5169	0.72	2.08	0.01
102	SLE RA 12	2	-6	5156	0.59	2.16	0.01
102	SLE RA 13	2	-6	5126	0.56	2.21	0.01
102	SLE RA 14	2	-8	5220	0.66	2.1	0.01
102	SLE RA 15	2	-5	5207	0.53	2.18	0.01
102	SLE RA 16	2	-9	5198	0.71	2.09	0.01
102	SLE RA 17	2	-6	5186	0.58	2.17	0.01
102	SLE RA 18	2	-12	5274	0.86	2.12	0.01
102	SLE RA 19	2	-9	5262	0.73	2.2	0.01
102	SLE RA 20	2	-10	5326	0.8	2.14	0.01
102	SLE RA 21	2	-8	5313	0.67	2.22	0.01
102	SLE FR 1	1	-11	4680	0.75	1.88	0.01

Nodo	Cont.	Reazione a traslazione			Reazione a rotazione		
Ind.	N.br.	x	y	z	x	y	z
102	SLE FR 2	1	-11	4676	0.71	1.91	0.01
102	SLE FR 3	1	-11	4701	0.73	1.89	0.01
102	SLE FR 4	2	-11	4854	0.74	1.98	0.01
102	SLE FR 5	1	-11	4879	0.76	1.96	0.01
102	SLE FR 6	1	-12	4977	0.8	2	0.01
102	SLE QP 1	1	-11	4680	0.75	1.88	0.01
102	SLE QP 2	1	-12	4859	0.78	1.95	0.01
102	SLD 1	4	391	5490	-18.46	6.19	0.02
102	SLD 2	4	391	5490	-18.46	6.19	0.02
102	SLD 3	7	-80	5188	3.82	7.83	0.04
102	SLD 4	7	-80	5188	3.82	7.83	0.04
102	SLD 5	-3	824	5507	-38.78	0.72	-0.02
102	SLD 6	-3	824	5507	-38.78	0.72	-0.02
102	SLD 7	8	-746	4499	35.49	6.22	0.06
102	SLD 8	8	-746	4499	35.49	6.22	0.06
102	SLD 9	-5	723	5219	-33.92	-2.31	-0.04
102	SLD 10	-5	723	5219	-33.92	-2.31	-0.04
102	SLD 11	6	-847	4210	40.35	3.18	0.05
102	SLD 12	6	-847	4210	40.35	3.18	0.05
102	SLD 13	-4	56	4529	-2.25	-3.93	-0.02
102	SLD 14	-4	56	4529	-2.25	-3.93	-0.02
102	SLD 15	-1	-415	4227	20.03	-2.28	0
102	SLD 16	-1	-415	4227	20.03	-2.28	0
102	SLV 1	6	926	6306	-43.99	11.93	0.02
102	SLV 2	6	926	6306	-43.99	11.93	0.02
102	SLV 3	15	-173	5599	8	16.04	0.08
102	SLV 4	15	-173	5599	8	16.04	0.08
102	SLV 5	-10	1936	6366	-91.49	-1.3	-0.08
102	SLV 6	-10	1936	6366	-91.49	-1.3	-0.08
102	SLV 7	19	-1726	4007	81.79	12.42	0.12
102	SLV 8	19	-1726	4007	81.79	12.42	0.12
102	SLV 9	-16	1703	5710	-80.23	-8.52	-0.1
102	SLV 10	-16	1703	5710	-80.23	-8.52	-0.1
102	SLV 11	13	-1960	3351	93.06	5.2	0.1
102	SLV 12	13	-1960	3351	93.06	5.2	0.1
102	SLV 13	-12	149	4119	-6.43	-12.14	-0.06
102	SLV 14	-12	149	4119	-6.43	-12.14	-0.06
102	SLV 15	-3	-949	3411	45.56	-8.03	0
102	SLV 16	-3	-949	3411	45.56	-8.03	0
103	SLU 1	2	-67	489	2.2	1.19	-0.03
103	SLU 2	2	-66	491	2.15	1.32	-0.03
103	SLU 3	2	-72	484	2.33	1.23	-0.03
103	SLU 4	2	-71	485	2.3	1.31	-0.03
103	SLU 5	2	-69	488	2.24	1.35	-0.03
103	SLU 6	2	-74	480	2.41	1.26	-0.03
103	SLU 7	2	-73	481	2.39	1.33	-0.03
103	SLU 8	2	-73	482	2.37	1.24	-0.03
103	SLU 9	2	-72	483	2.34	1.32	-0.03
103	SLU 10	3	-83	613	2.67	1.4	-0.03
103	SLU 11	3	-88	605	2.84	1.31	-0.03
103	SLU 12	3	-87	606	2.81	1.39	-0.03
103	SLU 13	3	-85	609	2.75	1.43	-0.03
103	SLU 14	3	-91	601	2.93	1.34	-0.03
103	SLU 15	3	-90	602	2.9	1.42	-0.03
103	SLU 16	3	-90	603	2.89	1.33	-0.03
103	SLU 17	3	-89	604	2.86	1.41	-0.03
103	SLU 18	3	-92	662	2.94	1.31	-0.03
103	SLU 19	3	-91	664	2.91	1.39	-0.03
103	SLU 20	3	-94	658	3.02	1.34	-0.03
103	SLU 21	3	-93	660	2.99	1.41	-0.03
103	SLU 22	2	-85	504	2.74	1.33	-0.03
103	SLU 23	3	-83	506	2.69	1.46	-0.03
103	SLU 24	3	-89	498	2.87	1.37	-0.03
103	SLU 25	3	-88	500	2.84	1.45	-0.03
103	SLU 26	3	-86	502	2.78	1.49	-0.03
103	SLU 27	3	-92	495	2.95	1.4	-0.03
103	SLU 28	3	-91	496	2.92	1.48	-0.03
103	SLU 29	3	-90	496	2.91	1.39	-0.03
103	SLU 30	3	-89	498	2.88	1.47	-0.03
103	SLU 31	3	-100	627	3.21	1.55	-0.03
103	SLU 32	3	-106	619	3.38	1.45	-0.03
103	SLU 33	3	-105	621	3.35	1.53	-0.03
103	SLU 34	3	-103	623	3.29	1.57	-0.03
103	SLU 35	3	-108	616	3.47	1.48	-0.03
103	SLU 36	3	-108	617	3.44	1.56	-0.03
103	SLU 37	3	-107	617	3.42	1.47	-0.03
103	SLU 38	3	-106	619	3.4	1.55	-0.03
103	SLU 39	3	-109	677	3.48	1.45	-0.03
103	SLU 40	3	-108	678	3.45	1.53	-0.03
103	SLU 41	3	-112	673	3.56	1.48	-0.03
103	SLU 42	3	-111	674	3.53	1.56	-0.04
103	SLU 43	3	-82	631	2.68	1.5	-0.03
103	SLU 44	3	-80	633	2.63	1.63	-0.03
103	SLU 45	3	-86	625	2.81	1.54	-0.03
103	SLU 46	3	-85	627	2.78	1.62	-0.03
103	SLU 47	3	-83	630	2.72	1.66	-0.04
103	SLU 48	3	-89	622	2.89	1.56	-0.03
103	SLU 49	3	-88	623	2.86	1.64	-0.04
103	SLU 50	3	-87	624	2.85	1.55	-0.03
103	SLU 51	3	-86	625	2.82	1.63	-0.04
103	SLU 52	3	-97	754	3.14	1.71	-0.04

Nodo	Cont.	Reazione a traslazione			Reazione a rotazione		
Ind.	N.br.	x	y	z	x	y	z
103	SLU 53	3	-103	746	3.32	1.62	-0.04
103	SLU 54	3	-102	748	3.29	1.7	-0.04
103	SLU 55	3	-100	751	3.23	1.74	-0.04
103	SLU 56	3	-105	743	3.4	1.65	-0.04
103	SLU 57	3	-104	744	3.37	1.72	-0.04
103	SLU 58	3	-104	745	3.36	1.64	-0.04
103	SLU 59	3	-103	746	3.33	1.71	-0.04
103	SLU 60	3	-106	804	3.41	1.62	-0.04
103	SLU 61	3	-105	805	3.38	1.7	-0.04
103	SLU 62	3	-108	800	3.5	1.64	-0.04
103	SLU 63	3	-108	802	3.47	1.72	-0.04
103	SLU 64	3	-99	645	3.22	1.64	-0.04
103	SLU 65	3	-98	648	3.17	1.77	-0.04
103	SLU 66	3	-103	640	3.35	1.68	-0.04
103	SLU 67	3	-102	641	3.32	1.76	-0.04
103	SLU 68	3	-100	644	3.25	1.8	-0.04
103	SLU 69	3	-106	636	3.43	1.71	-0.04
103	SLU 70	3	-105	638	3.4	1.78	-0.04
103	SLU 71	3	-105	638	3.39	1.7	-0.04
103	SLU 72	3	-104	640	3.36	1.77	-0.04
103	SLU 73	4	-114	769	3.68	1.86	-0.04
103	SLU 74	3	-120	761	3.86	1.76	-0.04
103	SLU 75	4	-119	762	3.83	1.84	-0.04
103	SLU 76	4	-117	765	3.77	1.88	-0.04
103	SLU 77	3	-123	757	3.94	1.79	-0.04
103	SLU 78	4	-122	759	3.91	1.87	-0.04
103	SLU 79	3	-121	759	3.9	1.78	-0.04
103	SLU 80	4	-120	761	3.87	1.86	-0.04
103	SLU 81	4	-123	818	3.95	1.76	-0.04
103	SLU 82	4	-122	820	3.92	1.84	-0.04
103	SLU 83	4	-126	815	4.04	1.79	-0.04
103	SLU 84	4	-125	816	4.01	1.86	-0.04
103	SLE RA 1	2	-72	493	2.36	1.23	-0.03
103	SLE RA 2	2	-71	495	2.33	1.32	-0.03
103	SLE RA 3	2	-75	490	2.44	1.26	-0.03
103	SLE RA 4	2	-75	491	2.42	1.31	-0.03
103	SLE RA 5	2	-73	492	2.38	1.34	-0.03
103	SLE RA 6	2	-77	487	2.5	1.27	-0.03
103	SLE RA 7	2	-76	488	2.48	1.33	-0.03
103	SLE RA 8	2	-76	488	2.47	1.27	-0.03
103	SLE RA 9	2	-75	489	2.45	1.32	-0.03
103	SLE RA 10	3	-83	576	2.67	1.37	-0.03
103	SLE RA 11	3	-86	570	2.78	1.31	-0.03
103	SLE RA 12	3	-86	571	2.76	1.36	-0.03
103	SLE RA 13	3	-84	573	2.72	1.39	-0.03
103	SLE RA 14	3	-88	568	2.84	1.33	-0.03
103	SLE RA 15	3	-88	569	2.82	1.38	-0.03
103	SLE RA 16	3	-87	569	2.81	1.32	-0.03
103	SLE RA 17	3	-87	570	2.79	1.37	-0.03
103	SLE RA 18	3	-88	609	2.85	1.31	-0.03
103	SLE RA 19	3	-88	610	2.83	1.36	-0.03
103	SLE RA 20	3	-90	606	2.9	1.33	-0.03
103	SLE RA 21	3	-90	607	2.88	1.38	-0.03
103	SLE FR 1	2	-72	493	2.36	1.23	-0.03
103	SLE FR 2	2	-72	494	2.35	1.25	-0.03
103	SLE FR 3	2	-73	492	2.38	1.24	-0.03
103	SLE FR 4	2	-77	528	2.5	1.27	-0.03
103	SLE FR 5	2	-78	527	2.53	1.26	-0.03
103	SLE FR 6	2	-80	551	2.6	1.27	-0.03
103	SLE QP 1	2	-72	493	2.36	1.23	-0.03
103	SLE QP 2	2	-77	528	2.5	1.26	-0.03
103	SLD 1	9	-5	599	0.27	6.59	-0.11
103	SLD 2	9	-5	599	0.27	6.59	-0.11
103	SLD 3	10	-123	484	3.92	7.56	-0.13
103	SLD 4	10	-123	484	3.92	7.56	-0.13
103	SLD 5	2	124	723	-3.7	1.39	-0.03
103	SLD 6	2	124	723	-3.7	1.39	-0.03
103	SLD 7	7	-270	341	8.46	4.62	-0.08
103	SLD 8	7	-270	341	8.46	4.62	-0.08
103	SLD 9	-2	116	715	-3.45	-2.1	0.03
103	SLD 10	-2	116	715	-3.45	-2.1	0.03
103	SLD 11	2	-278	333	8.7	1.13	-0.03
103	SLD 12	2	-278	333	8.7	1.13	-0.03
103	SLD 13	-5	-32	572	1.09	-5.05	0.07
103	SLD 14	-5	-32	572	1.09	-5.05	0.07
103	SLD 15	-4	-150	457	4.74	-4.08	0.05
103	SLD 16	-4	-150	457	4.74	-4.08	0.05
103	SLV 1	17	94	695	-2.75	13.97	-0.22
103	SLV 2	17	94	695	-2.75	13.97	-0.22
103	SLV 3	20	-183	427	5.77	16.36	-0.26
103	SLV 4	20	-183	427	5.77	16.36	-0.26
103	SLV 5	2	393	984	-12	1.45	-0.02
103	SLV 6	2	393	984	-12	1.45	-0.02
103	SLV 7	12	-528	92	16.41	9.41	-0.16
103	SLV 8	12	-528	92	16.41	9.41	-0.16
103	SLV 9	-8	374	964	-11.4	-6.9	0.1
103	SLV 10	-8	374	964	-11.4	-6.9	0.1
103	SLV 11	3	-548	72	17.01	1.06	-0.03
103	SLV 12	3	-548	72	17.01	1.06	-0.03
103	SLV 13	-16	28	629	-0.77	-13.85	0.21
103	SLV 14	-16	28	629	-0.77	-13.85	0.21

Nodo	Cont.	Reazione a traslazione			Reazione a rotazione		
Ind.	N.br.	x	y	z	x	y	z
103	SLV 15	-13	-248	361	7.76	-11.46	0.17
103	SLV 16	-13	-248	361	7.76	-11.46	0.17
104	SLU 1	1	891	5409	-40.59	4.5	-0.02
104	SLU 2	-8	871	5640	-40.2	-1.55	-0.02
104	SLU 3	1	916	5563	-41.76	4.65	-0.02
104	SLU 4	-5	904	5701	-41.52	1.02	-0.02
104	SLU 5	-8	883	5740	-40.79	-1.45	-0.02
104	SLU 6	1	928	5663	-42.35	4.75	-0.02
104	SLU 7	-5	917	5801	-42.11	1.12	-0.02
104	SLU 8	1	916	5608	-41.77	4.7	-0.02
104	SLU 9	-5	904	5747	-41.54	1.07	-0.02
104	SLU 10	-8	972	6282	-44.9	-0.89	-0.03
104	SLU 11	1	1017	6205	-46.46	5.31	-0.02
104	SLU 12	-4	1005	6344	-46.22	1.68	-0.03
104	SLU 13	-8	985	6382	-45.49	-0.79	-0.03
104	SLU 14	1	1030	6305	-47.05	5.41	-0.02
104	SLU 15	-4	1018	6443	-46.81	1.78	-0.03
104	SLU 16	1	1017	6251	-46.47	5.36	-0.02
104	SLU 17	-4	1005	6389	-46.24	1.73	-0.03
104	SLU 18	1	1035	6327	-47.31	5.44	-0.02
104	SLU 19	-4	1023	6465	-47.07	1.81	-0.03
104	SLU 20	1	1048	6426	-47.9	5.54	-0.03
104	SLU 21	-4	1036	6565	-47.66	1.91	-0.03
104	SLU 22	1	993	6023	-45.29	5.12	-0.02
104	SLU 23	-8	973	6254	-44.9	-0.93	-0.03
104	SLU 24	1	1018	6177	-46.45	5.26	-0.02
104	SLU 25	-4	1006	6315	-46.22	1.63	-0.03
104	SLU 26	-8	985	6354	-45.49	-0.83	-0.03
104	SLU 27	1	1030	6277	-47.04	5.36	-0.02
104	SLU 28	-4	1018	6415	-46.81	1.73	-0.03
104	SLU 29	1	1018	6222	-46.47	5.32	-0.02
104	SLU 30	-4	1006	6361	-46.24	1.69	-0.03
104	SLU 31	-8	1074	6896	-49.6	-0.27	-0.03
104	SLU 32	1	1119	6819	-51.15	5.92	-0.03
104	SLU 33	-4	1107	6958	-50.92	2.29	-0.03
104	SLU 34	-8	1086	6996	-50.19	-0.17	-0.03
104	SLU 35	1	1132	6919	-51.75	6.02	-0.03
104	SLU 36	-4	1120	7057	-51.51	2.39	-0.03
104	SLU 37	1	1119	6865	-51.17	5.98	-0.03
104	SLU 38	-4	1107	7003	-50.94	2.35	-0.03
104	SLU 39	1	1137	6940	-52	6.06	-0.03
104	SLU 40	-4	1125	7079	-51.77	2.43	-0.03
104	SLU 41	1	1150	7040	-52.59	6.16	-0.03
104	SLU 42	-4	1138	7179	-52.36	2.53	-0.03
104	SLU 43	1	1123	6821	-51.16	5.64	-0.03
104	SLU 44	-8	1103	7052	-50.77	-0.41	-0.03
104	SLU 45	1	1148	6975	-52.32	5.79	-0.03
104	SLU 46	-4	1136	7114	-52.09	2.16	-0.03
104	SLU 47	-8	1116	7152	-51.36	-0.31	-0.03
104	SLU 48	1	1161	7075	-52.91	5.89	-0.03
104	SLU 49	-4	1149	7213	-52.68	2.26	-0.03
104	SLU 50	1	1148	7021	-52.34	5.84	-0.03
104	SLU 51	-4	1136	7159	-52.11	2.21	-0.03
104	SLU 52	-8	1204	7694	-55.47	0.25	-0.03
104	SLU 53	1	1250	7617	-57.02	6.44	-0.03
104	SLU 54	-4	1238	7756	-56.79	2.81	-0.03
104	SLU 55	-8	1217	7794	-56.06	0.35	-0.03
104	SLU 56	1	1262	7717	-57.61	6.54	-0.03
104	SLU 57	-4	1250	7855	-57.38	2.91	-0.03
104	SLU 58	1	1249	7663	-57.04	6.5	-0.03
104	SLU 59	-4	1237	7801	-56.81	2.87	-0.03
104	SLU 60	1	1268	7739	-57.87	6.58	-0.03
104	SLU 61	-4	1256	7877	-57.64	2.95	-0.03
104	SLU 62	1	1280	7838	-58.46	6.68	-0.03
104	SLU 63	-4	1268	7977	-58.23	3.05	-0.03
104	SLU 64	1	1225	7435	-55.86	6.26	-0.03
104	SLU 65	-8	1205	7666	-55.47	0.21	-0.03
104	SLU 66	1	1250	7589	-57.02	6.4	-0.03
104	SLU 67	-4	1238	7728	-56.79	2.77	-0.03
104	SLU 68	-8	1217	7766	-56.06	0.31	-0.03
104	SLU 69	1	1263	7689	-57.61	6.5	-0.03
104	SLU 70	-4	1251	7827	-57.38	2.87	-0.03
104	SLU 71	1	1250	7635	-57.04	6.46	-0.03
104	SLU 72	-4	1238	7773	-56.8	2.83	-0.03
104	SLU 73	-8	1306	8308	-60.17	0.87	-0.03
104	SLU 74	1	1351	8231	-61.72	7.06	-0.03
104	SLU 75	-4	1339	8370	-61.49	3.43	-0.03
104	SLU 76	-8	1319	8408	-60.76	0.97	-0.03
104	SLU 77	1	1364	8331	-62.31	7.16	-0.03
104	SLU 78	-4	1352	8469	-62.08	3.53	-0.03
104	SLU 79	1	1351	8277	-61.74	7.12	-0.03
104	SLU 80	-4	1339	8415	-61.51	3.49	-0.03
104	SLU 81	1	1370	8353	-62.57	7.2	-0.03
104	SLU 82	-4	1358	8491	-62.34	3.57	-0.03
104	SLU 83	1	1382	8452	-63.16	7.3	-0.03
104	SLU 84	-4	1370	8591	-62.93	3.67	-0.03
104	SLE RA 1	1	920	5585	-41.93	4.68	-0.02
104	SLE RA 2	-5	907	5738	-41.67	0.64	-0.02
104	SLE RA 3	1	937	5687	-42.71	4.77	-0.02
104	SLE RA 4	-3	929	5779	-42.55	2.35	-0.02
104	SLE RA 5	-5	915	5805	-42.07	0.71	-0.02

Nodo	Cont.	Reazione a traslazione			Reazione a rotazione		
Ind.	N.br.	x	y	z	x	y	z
104	SLE RA 6	1	945	5754	-43.1	4.84	-0.02
104	SLE RA 7	-3	937	5846	-42.95	2.42	-0.02
104	SLE RA 8	1	936	5717	-42.72	4.81	-0.02
104	SLE RA 9	-3	929	5810	-42.57	2.39	-0.02
104	SLE RA 10	-5	974	6167	-44.81	1.08	-0.03
104	SLE RA 11	1	1004	6115	-45.84	5.21	-0.02
104	SLE RA 12	-3	996	6208	-45.69	2.79	-0.02
104	SLE RA 13	-5	982	6233	-45.2	1.15	-0.03
104	SLE RA 14	1	1013	6182	-46.24	5.28	-0.02
104	SLE RA 15	-3	1005	6274	-46.08	2.86	-0.03
104	SLE RA 16	1	1004	6146	-45.85	5.25	-0.02
104	SLE RA 17	-3	996	6238	-45.7	2.83	-0.02
104	SLE RA 18	1	1016	6196	-46.41	5.3	-0.02
104	SLE RA 19	-3	1008	6289	-46.25	2.88	-0.03
104	SLE RA 20	1	1025	6263	-46.8	5.37	-0.02
104	SLE RA 21	-3	1017	6355	-46.65	2.95	-0.03
104	SLE FR 1	1	920	5585	-41.93	4.68	-0.02
104	SLE FR 2	0	917	5615	-41.88	3.87	-0.02
104	SLE FR 3	1	923	5611	-42.09	4.7	-0.02
104	SLE FR 4	0	946	5799	-43.22	4.06	-0.02
104	SLE FR 5	1	952	5795	-43.43	4.89	-0.02
104	SLE FR 6	1	968	5890	-44.17	4.99	-0.02
104	SLE QP 1	1	920	5585	-41.93	4.68	-0.02
104	SLE QP 2	1	949	5768	-43.28	4.87	-0.02
104	SLD 1	-1	1404	8027	-63.75	8.6	-0.04
104	SLD 2	-1	1404	8027	-63.75	8.6	-0.04
104	SLD 3	9	886	7112	-40.89	14.62	-0.04
104	SLD 4	9	886	7112	-40.89	14.62	-0.04
104	SLD 5	-15	1870	7833	-84.09	-3.15	-0.04
104	SLD 6	-15	1870	7833	-84.09	-3.15	-0.04
104	SLD 7	19	145	4783	-7.89	16.93	-0.02
104	SLD 8	19	145	4783	-7.89	16.93	-0.02
104	SLD 9	-17	1752	6753	-78.66	-7.2	-0.03
104	SLD 10	-17	1752	6753	-78.66	-7.2	-0.03
104	SLD 11	17	27	3703	-2.46	12.88	-0.01
104	SLD 12	17	27	3703	-2.46	12.88	-0.01
104	SLD 13	-8	1011	4424	-45.67	-4.89	-0.01
104	SLD 14	-8	1011	4424	-45.67	-4.89	-0.01
104	SLD 15	2	494	3509	-22.81	1.13	0
104	SLD 16	2	494	3509	-22.81	1.13	0
104	SLV 1	-3	2017	11016	-91.35	13.4	-0.07
104	SLV 2	-3	2017	11016	-91.35	13.4	-0.07
104	SLV 3	22	805	8876	-37.86	28.5	-0.06
104	SLV 4	22	805	8876	-37.86	28.5	-0.06
104	SLV 5	-39	3107	10589	-138.82	-15.48	-0.06
104	SLV 6	-39	3107	10589	-138.82	-15.48	-0.06
104	SLV 7	46	-932	3454	39.47	34.86	-0.01
104	SLV 8	46	-932	3454	39.47	34.86	-0.01
104	SLV 9	-44	2829	8083	-126.02	-25.13	-0.03
104	SLV 10	-44	2829	8083	-126.02	-25.13	-0.03
104	SLV 11	41	-1209	947	52.27	25.21	0.01
104	SLV 12	41	-1209	947	52.27	25.21	0.01
104	SLV 13	-21	1092	2661	-48.69	-18.77	0.01
104	SLV 14	-21	1092	2661	-48.69	-18.77	0.01
104	SLV 15	5	-119	520	4.8	-3.67	0.02
104	SLV 16	5	-119	520	4.8	-3.67	0.02
105	SLU 1	-1	290	3226	-10.78	0.06	0
105	SLU 2	-4	511	3381	-21.17	-2.11	0
105	SLU 3	-1	300	3307	-11.15	0.07	0
105	SLU 4	-3	432	3400	-17.39	-1.23	0
105	SLU 5	-4	518	3434	-21.43	-2.11	0
105	SLU 6	-1	307	3359	-11.41	0.07	0
105	SLU 7	-3	439	3452	-17.64	-1.23	0
105	SLU 8	-1	303	3331	-11.29	0.07	0
105	SLU 9	-3	436	3424	-17.53	-1.23	0
105	SLU 10	-4	537	3815	-21.98	-2.09	0
105	SLU 11	-1	326	3741	-11.95	0.09	0
105	SLU 12	-3	459	3834	-18.19	-1.21	0
105	SLU 13	-4	544	3868	-22.23	-2.08	0
105	SLU 14	-1	333	3794	-12.21	0.1	0
105	SLU 15	-3	466	3887	-18.45	-1.2	0
105	SLU 16	-1	330	3766	-12.09	0.09	0
105	SLU 17	-3	462	3859	-18.33	-1.21	0
105	SLU 18	-1	327	3847	-11.92	0.09	0
105	SLU 19	-3	460	3940	-18.16	-1.21	0
105	SLU 20	-1	334	3899	-12.18	0.09	0
105	SLU 21	-3	467	3992	-18.42	-1.21	0
105	SLU 22	-1	319	3626	-11.75	0.08	0
105	SLU 23	-4	541	3781	-22.15	-2.08	0
105	SLU 24	-1	330	3706	-12.13	0.1	0
105	SLU 25	-3	462	3799	-18.37	-1.2	0
105	SLU 26	-4	548	3833	-22.41	-2.08	0
105	SLU 27	-1	336	3759	-12.38	0.1	0
105	SLU 28	-3	469	3852	-18.62	-1.2	0
105	SLU 29	-1	333	3731	-12.27	0.1	0
105	SLU 30	-3	466	3824	-18.51	-1.2	0
105	SLU 31	-4	567	4215	-22.95	-2.06	0
105	SLU 32	-1	356	4141	-12.93	0.12	0
105	SLU 33	-3	489	4234	-19.17	-1.18	0
105	SLU 34	-4	574	4268	-23.21	-2.05	0
105	SLU 35	-1	363	4194	-13.18	0.13	0

Nodo	Cont.	Reazione a traslazione			Reazione a rotazione		
Ind.	N.br.	x	y	z	x	y	z
105	SLU 36	-3	496	4287	-19.42	-1.17	0
105	SLU 37	-1	360	4166	-13.07	0.12	0
105	SLU 38	-3	492	4259	-19.31	-1.18	0
105	SLU 39	-1	357	4246	-12.9	0.12	0
105	SLU 40	-3	490	4339	-19.14	-1.18	0
105	SLU 41	-1	364	4299	-13.16	0.12	0
105	SLU 42	-3	497	4392	-19.39	-1.18	0
105	SLU 43	-1	366	4057	-13.67	0.06	0
105	SLU 44	-4	588	4212	-24.07	-2.11	0
105	SLU 45	-1	376	4137	-14.05	0.07	0
105	SLU 46	-3	509	4230	-20.28	-1.23	0
105	SLU 47	-4	594	4264	-24.33	-2.1	0
105	SLU 48	-1	383	4190	-14.3	0.08	0
105	SLU 49	-3	516	4283	-20.54	-1.22	0
105	SLU 50	-1	380	4162	-14.19	0.07	0
105	SLU 51	-3	513	4255	-20.43	-1.23	0
105	SLU 52	-4	614	4646	-24.87	-2.08	0
105	SLU 53	-1	403	4572	-14.85	0.1	0
105	SLU 54	-3	535	4665	-21.09	-1.2	0
105	SLU 55	-4	621	4699	-25.13	-2.08	0
105	SLU 56	-1	410	4625	-15.1	0.1	0
105	SLU 57	-3	542	4718	-21.34	-1.2	0
105	SLU 58	-1	406	4597	-14.99	0.1	0
105	SLU 59	-3	539	4690	-21.23	-1.2	0
105	SLU 60	-1	404	4677	-14.82	0.09	0
105	SLU 61	-3	537	4770	-21.06	-1.21	0
105	SLU 62	-1	411	4730	-15.07	0.1	0
105	SLU 63	-3	544	4823	-21.31	-1.2	0
105	SLU 64	-1	396	4456	-14.65	0.09	0
105	SLU 65	-4	617	4611	-25.05	-2.08	0
105	SLU 66	-1	406	4537	-15.02	0.1	0
105	SLU 67	-3	539	4630	-21.26	-1.2	0
105	SLU 68	-4	624	4664	-25.31	-2.07	0
105	SLU 69	-1	413	4590	-15.28	0.11	0
105	SLU 70	-3	546	4683	-21.52	-1.19	0
105	SLU 71	-1	410	4562	-15.17	0.1	0
105	SLU 72	-3	543	4655	-21.4	-1.2	0
105	SLU 73	-4	644	5046	-25.85	-2.05	0
105	SLU 74	-1	433	4972	-15.83	0.13	0
105	SLU 75	-3	565	5065	-22.06	-1.17	0
105	SLU 76	-4	651	5099	-26.11	-2.05	0
105	SLU 77	-1	439	5024	-16.08	0.13	0
105	SLU 78	-3	572	5117	-22.32	-1.17	0
105	SLU 79	-1	436	4996	-15.97	0.13	0
105	SLU 80	-3	569	5089	-22.21	-1.17	0
105	SLU 81	-1	434	5077	-15.8	0.12	0
105	SLU 82	-3	567	5170	-22.04	-1.18	0
105	SLU 83	-1	441	5130	-16.05	0.13	0
105	SLU 84	-3	573	5223	-22.29	-1.17	0
105	SLE RA 1	-1	298	3340	-11.05	0.06	0
105	SLE RA 2	-3	446	3443	-17.99	-1.38	0
105	SLE RA 3	-1	305	3394	-11.3	0.07	0
105	SLE RA 4	-2	393	3456	-15.46	-0.79	0
105	SLE RA 5	-3	450	3478	-18.16	-1.38	0
105	SLE RA 6	-1	309	3429	-11.47	0.08	0
105	SLE RA 7	-2	398	3491	-15.63	-0.79	0
105	SLE RA 8	-1	307	3410	-11.4	0.07	0
105	SLE RA 9	-2	396	3472	-15.56	-0.8	0
105	SLE RA 10	-3	463	3733	-18.52	-1.37	0
105	SLE RA 11	-1	322	3684	-11.84	0.09	0
105	SLE RA 12	-2	411	3746	-16	-0.78	0
105	SLE RA 13	-3	468	3768	-18.69	-1.36	0
105	SLE RA 14	-1	327	3719	-12.01	0.09	0
105	SLE RA 15	-2	416	3781	-16.17	-0.78	0
105	SLE RA 16	-1	325	3700	-11.93	0.09	0
105	SLE RA 17	-2	413	3762	-16.09	-0.78	0
105	SLE RA 18	-1	323	3754	-11.82	0.08	0
105	SLE RA 19	-2	412	3816	-15.98	-0.78	0
105	SLE RA 20	-1	328	3789	-11.99	0.09	0
105	SLE RA 21	-2	416	3851	-16.15	-0.78	0
105	SLE FR 1	-1	298	3340	-11.05	0.06	0
105	SLE FR 2	-1	328	3361	-12.44	-0.23	0
105	SLE FR 3	-1	300	3354	-11.12	0.07	0
105	SLE FR 4	-1	335	3485	-12.67	-0.22	0
105	SLE FR 5	-1	308	3478	-11.35	0.07	0
105	SLE FR 6	-1	311	3547	-11.44	0.07	0
105	SLE QP 1	-1	298	3340	-11.05	0.06	0
105	SLE QP 2	-1	306	3464	-11.28	0.07	0
105	SLD 1	0	724	3858	-30.34	1	-0.01
105	SLD 2	0	724	3858	-30.34	1	-0.01
105	SLD 3	-4	270	3446	-9.66	2.89	-0.01
105	SLD 4	-4	270	3446	-9.66	2.89	-0.01
105	SLD 5	4	1120	4206	-48.36	-2.52	-0.01
105	SLD 6	4	1120	4206	-48.36	-2.52	-0.01
105	SLD 7	-6	-394	2835	20.57	3.79	0
105	SLD 8	-6	-394	2835	20.57	3.79	0
105	SLD 9	5	1005	4093	-43.13	-3.65	0
105	SLD 10	5	1005	4093	-43.13	-3.65	0
105	SLD 11	-6	-508	2722	25.8	2.66	0
105	SLD 12	-6	-508	2722	25.8	2.66	0
105	SLD 13	2	342	3482	-12.91	-2.75	0

Nodo	Cont.	Reazione a traslazione			Reazione a rotazione		
Ind.	N.br.	x	y	z	x	y	z
105	SLD 14	2	342	3482	-12.91	-2.75	0
105	SLD 15	-1	-112	3071	7.77	-0.86	0
105	SLD 16	-1	-112	3071	7.77	-0.86	0
105	SLV 1	0	1304	4387	-56.78	2.18	-0.02
105	SLV 2	0	1304	4387	-56.78	2.18	-0.02
105	SLV 3	-8	240	3413	-8.31	6.97	-0.01
105	SLV 4	-8	240	3413	-8.31	6.97	-0.01
105	SLV 5	12	2219	5218	-98.44	-6.57	-0.01
105	SLV 6	12	2219	5218	-98.44	-6.57	-0.01
105	SLV 7	-15	-1328	1972	63.12	9.42	0
105	SLV 8	-15	-1328	1972	63.12	9.42	0
105	SLV 9	14	1939	4956	-85.69	-9.28	-0.01
105	SLV 10	14	1939	4956	-85.69	-9.28	-0.01
105	SLV 11	-13	-1607	1711	75.87	6.71	0.01
105	SLV 12	-13	-1607	1711	75.87	6.71	0.01
105	SLV 13	7	371	3515	-14.26	-6.83	0.01
105	SLV 14	7	371	3515	-14.26	-6.83	0.01
105	SLV 15	-1	-692	2542	34.21	-2.04	0.01
105	SLV 16	-1	-692	2542	34.21	-2.04	0.01
106	SLU 1	0	232	779	-10.24	-0.41	0
106	SLU 2	0	272	831	-12.01	0.28	0
106	SLU 3	0	238	775	-10.48	-0.43	0
106	SLU 4	0	262	806	-11.54	-0.01	0
106	SLU 5	0	275	827	-12.14	0.27	0
106	SLU 6	0	241	772	-10.61	-0.44	0
106	SLU 7	0	265	803	-11.67	-0.02	0
106	SLU 8	0	238	773	-10.51	-0.43	0
106	SLU 9	0	262	803	-11.57	-0.02	0
106	SLU 10	0	296	820	-13.06	0.23	0
106	SLU 11	0	261	765	-11.53	-0.48	0
106	SLU 12	0	285	796	-12.59	-0.06	0
106	SLU 13	0	299	817	-13.19	0.22	0
106	SLU 14	0	264	762	-11.67	-0.49	0
106	SLU 15	0	288	792	-12.73	-0.07	0
106	SLU 16	0	262	762	-11.56	-0.48	0
106	SLU 17	0	286	793	-12.62	-0.07	0
106	SLU 18	0	266	764	-11.75	-0.48	0
106	SLU 19	0	290	795	-12.81	-0.06	0
106	SLU 20	0	269	761	-11.88	-0.49	0
106	SLU 21	0	293	792	-12.94	-0.08	0
106	SLU 22	0	255	769	-11.26	-0.46	0
106	SLU 23	0	295	820	-13.02	0.23	0
106	SLU 24	0	260	765	-11.5	-0.47	0
106	SLU 25	0	284	796	-12.55	-0.06	0
106	SLU 26	0	298	817	-13.16	0.22	0
106	SLU 27	0	263	762	-11.63	-0.49	0
106	SLU 28	0	287	793	-12.69	-0.07	0
106	SLU 29	0	261	762	-11.53	-0.48	0
106	SLU 30	0	285	793	-12.58	-0.06	0
106	SLU 31	0	319	810	-14.08	0.19	0
106	SLU 32	0	284	755	-12.55	-0.52	0
106	SLU 33	0	308	785	-13.61	-0.11	0
106	SLU 34	0	322	806	-14.21	0.18	0
106	SLU 35	0	287	751	-12.68	-0.53	0
106	SLU 36	0	311	782	-13.74	-0.12	0
106	SLU 37	0	285	752	-12.58	-0.53	0
106	SLU 38	0	309	782	-13.64	-0.11	0
106	SLU 39	0	289	754	-12.76	-0.53	0
106	SLU 40	0	313	785	-13.82	-0.11	0
106	SLU 41	0	292	750	-12.9	-0.54	0
106	SLU 42	0	316	781	-13.96	-0.12	0
106	SLU 43	0	294	1016	-12.97	-0.52	0
106	SLU 44	0	334	1068	-14.73	0.17	0
106	SLU 45	0	299	1013	-13.21	-0.54	0
106	SLU 46	0	324	1044	-14.26	-0.12	0
106	SLU 47	0	337	1065	-14.86	0.16	0
106	SLU 48	0	302	1009	-13.34	-0.55	0
106	SLU 49	0	327	1040	-14.4	-0.13	0
106	SLU 50	0	300	1010	-13.24	-0.54	0
106	SLU 51	0	324	1041	-14.29	-0.13	0
106	SLU 52	0	358	1057	-15.78	0.13	0
106	SLU 53	0	323	1002	-14.26	-0.58	0
106	SLU 54	0	347	1033	-15.32	-0.17	0
106	SLU 55	0	361	1054	-15.92	0.12	0
106	SLU 56	0	326	999	-14.39	-0.59	0
106	SLU 57	0	350	1030	-15.45	-0.18	0
106	SLU 58	0	324	999	-14.29	-0.59	0
106	SLU 59	0	348	1030	-15.35	-0.17	0
106	SLU 60	0	328	1001	-14.47	-0.59	0
106	SLU 61	0	352	1032	-15.53	-0.17	0
106	SLU 62	0	331	998	-14.61	-0.6	0
106	SLU 63	0	355	1029	-15.67	-0.18	0
106	SLU 64	0	317	1006	-13.98	-0.57	0
106	SLU 65	0	357	1058	-15.75	0.13	0
106	SLU 66	0	322	1002	-14.22	-0.58	0
106	SLU 67	0	346	1033	-15.28	-0.17	0
106	SLU 68	0	360	1054	-15.88	0.12	0
106	SLU 69	0	325	999	-14.35	-0.59	0
106	SLU 70	0	349	1030	-15.41	-0.18	0
106	SLU 71	0	323	999	-14.25	-0.59	0
106	SLU 72	0	347	1030	-15.31	-0.17	0

Nodo	Cont.	Reazione a traslazione			Reazione a rotazione		
Ind.	N.br.	x	y	z	x	y	z
106	SLU 73	0	381	1047	-16.8	0.08	0
106	SLU 74	0	346	992	-15.27	-0.63	0
106	SLU 75	0	370	1023	-16.33	-0.21	0
106	SLU 76	0	384	1044	-16.93	0.07	0
106	SLU 77	0	349	989	-15.41	-0.64	0
106	SLU 78	0	373	1019	-16.47	-0.22	0
106	SLU 79	0	347	989	-15.31	-0.64	0
106	SLU 80	0	371	1020	-16.36	-0.22	0
106	SLU 81	0	351	991	-15.49	-0.64	0
106	SLU 82	0	375	1022	-16.55	-0.22	0
106	SLU 83	0	354	988	-15.62	-0.65	0
106	SLU 84	0	378	1019	-16.68	-0.23	0
106	SLE RA 1	0	239	776	-10.53	-0.43	0
106	SLE RA 2	0	266	810	-11.71	0.04	0
106	SLE RA 3	0	242	774	-10.69	-0.44	0
106	SLE RA 4	0	258	794	-11.4	-0.16	0
106	SLE RA 5	0	268	808	-11.8	0.03	0
106	SLE RA 6	0	244	772	-10.78	-0.44	0
106	SLE RA 7	0	260	792	-11.49	-0.17	0
106	SLE RA 8	0	243	772	-10.71	-0.44	0
106	SLE RA 9	0	259	792	-11.42	-0.16	0
106	SLE RA 10	0	281	803	-12.41	0	0
106	SLE RA 11	0	258	767	-11.39	-0.47	0
106	SLE RA 12	0	274	787	-12.1	-0.19	0
106	SLE RA 13	0	283	801	-12.5	0	0
106	SLE RA 14	0	260	764	-11.48	-0.48	0
106	SLE RA 15	0	276	785	-12.19	-0.2	0
106	SLE RA 16	0	259	765	-11.41	-0.47	0
106	SLE RA 17	0	275	785	-12.12	-0.19	0
106	SLE RA 18	0	261	766	-11.54	-0.47	0
106	SLE RA 19	0	277	787	-12.24	-0.19	0
106	SLE RA 20	0	263	764	-11.63	-0.48	0
106	SLE RA 21	0	279	784	-12.33	-0.2	0
106	SLE FR 1	0	239	776	-10.53	-0.43	0
106	SLE FR 2	0	244	783	-10.77	-0.33	0
106	SLE FR 3	0	240	775	-10.57	-0.43	0
106	SLE FR 4	0	251	780	-11.07	-0.35	0
106	SLE FR 5	0	246	772	-10.87	-0.44	0
106	SLE FR 6	0	250	771	-11.03	-0.45	0
106	SLE QP 1	0	239	776	-10.53	-0.43	0
106	SLE QP 2	0	246	773	-10.83	-0.44	0
106	SLD 1	31	309	1059	-13.58	46.3	0.01
106	SLD 2	31	309	1059	-13.58	46.3	0.01
106	SLD 3	37	4	695	-0.02	54.19	0.01
106	SLD 4	37	4	695	-0.02	54.19	0.01
106	SLD 5	1	727	1411	-32.21	1.61	0
106	SLD 6	1	727	1411	-32.21	1.61	0
106	SLD 7	19	-290	198	12.97	27.92	0.01
106	SLD 8	19	-290	198	12.97	27.92	0.01
106	SLD 9	-19	781	1349	-34.64	-28.8	-0.01
106	SLD 10	-19	781	1349	-34.64	-28.8	-0.01
106	SLD 11	-2	-236	136	10.55	-2.49	0
106	SLD 12	-2	-236	136	10.55	-2.49	0
106	SLD 13	-37	487	852	-21.65	-55.07	-0.01
106	SLD 14	-37	487	852	-21.65	-55.07	-0.01
106	SLD 15	-32	182	488	-8.09	-47.18	-0.01
106	SLD 16	-32	182	488	-8.09	-47.18	-0.01
106	SLV 1	78	392	1437	-17.16	114.9	0.02
106	SLV 2	78	392	1437	-17.16	114.9	0.02
106	SLV 3	91	-320	587	14.48	134.64	0.03
106	SLV 4	91	-320	587	14.48	134.64	0.03
106	SLV 5	3	1370	2261	-60.71	4.23	-0.01
106	SLV 6	3	1370	2261	-60.71	4.23	-0.01
106	SLV 7	47	-1004	-572	44.74	70.02	0.02
106	SLV 8	47	-1004	-572	44.74	70.02	0.02
106	SLV 9	-47	1495	2118	-66.41	-70.9	-0.02
106	SLV 10	-47	1495	2118	-66.41	-70.9	-0.02
106	SLV 11	-4	-878	-715	39.04	-5.11	0.01
106	SLV 12	-4	-878	-715	39.04	-5.11	0.01
106	SLV 13	-91	811	959	-36.15	-135.52	-0.03
106	SLV 14	-91	811	959	-36.15	-135.52	-0.03
106	SLV 15	-78	99	110	-4.51	-115.79	-0.02
106	SLV 16	-78	99	110	-4.51	-115.79	-0.02
107	SLU 1	0	91	4336	5.26	-0.51	0
107	SLU 2	0	314	4663	-5.3	-0.07	0
107	SLU 3	0	95	4450	5.32	-0.53	0
107	SLU 4	0	230	4646	-1.02	-0.26	0
107	SLU 5	0	318	4737	-5.31	-0.08	0
107	SLU 6	0	100	4524	5.31	-0.54	0
107	SLU 7	0	234	4720	-1.02	-0.27	0
107	SLU 8	0	99	4484	5.25	-0.53	0
107	SLU 9	0	233	4680	-1.09	-0.26	0
107	SLU 10	0	323	5215	-4.28	-0.14	0
107	SLU 11	-1	104	5002	6.34	-0.6	0
107	SLU 12	0	238	5198	0	-0.34	0
107	SLU 13	0	327	5289	-4.29	-0.15	0
107	SLU 14	-1	108	5076	6.33	-0.61	0
107	SLU 15	0	242	5272	0	-0.34	0
107	SLU 16	-1	107	5036	6.26	-0.6	0
107	SLU 17	0	241	5232	-0.07	-0.34	0
107	SLU 18	-1	103	5124	6.71	-0.62	0

Nodo	Cont.	Reazione a traslazione			Reazione a rotazione		
Ind.	N.br.	x	y	z	x	y	z
107	SLU 19	0	237	5320	0.38	-0.35	0
107	SLU 20	-1	107	5198	6.71	-0.63	0
107	SLU 21	0	241	5394	0.37	-0.36	0
107	SLU 22	-1	102	4859	6.05	-0.59	0
107	SLU 23	0	325	5186	-4.51	-0.14	0
107	SLU 24	-1	107	4973	6.11	-0.6	0
107	SLU 25	0	241	5169	-0.23	-0.33	0
107	SLU 26	0	330	5260	-4.52	-0.15	0
107	SLU 27	-1	111	5047	6.1	-0.61	0
107	SLU 28	0	245	5243	-0.23	-0.34	0
107	SLU 29	-1	110	5006	6.03	-0.6	0
107	SLU 30	0	244	5203	-0.3	-0.33	0
107	SLU 31	0	334	5737	-3.49	-0.22	0
107	SLU 32	-1	115	5524	7.13	-0.68	0
107	SLU 33	0	249	5721	0.79	-0.41	0
107	SLU 34	0	338	5811	-3.5	-0.22	0
107	SLU 35	-1	119	5598	7.12	-0.68	0
107	SLU 36	0	253	5795	0.78	-0.42	0
107	SLU 37	-1	118	5558	7.05	-0.68	0
107	SLU 38	0	253	5754	0.72	-0.41	0
107	SLU 39	-1	114	5647	7.5	-0.69	0
107	SLU 40	0	248	5843	1.17	-0.43	0
107	SLU 41	-1	118	5721	7.5	-0.7	0
107	SLU 42	0	252	5917	1.16	-0.43	0
107	SLU 43	-1	114	5458	6.56	-0.64	0
107	SLU 44	0	337	5785	-4	-0.2	0
107	SLU 45	-1	119	5572	6.62	-0.66	0
107	SLU 46	0	253	5768	0.29	-0.39	0
107	SLU 47	0	342	5859	-4	-0.21	0
107	SLU 48	-1	123	5646	6.62	-0.67	0
107	SLU 49	0	257	5842	0.28	-0.4	0
107	SLU 50	-1	122	5606	6.55	-0.66	0
107	SLU 51	0	256	5802	0.22	-0.39	0
107	SLU 52	0	346	6336	-2.98	-0.27	0
107	SLU 53	-1	127	6123	7.64	-0.73	0
107	SLU 54	0	261	6320	1.31	-0.47	0
107	SLU 55	0	350	6410	-2.98	-0.28	0
107	SLU 56	-1	131	6197	7.64	-0.74	0
107	SLU 57	0	265	6394	1.3	-0.47	0
107	SLU 58	-1	131	6157	7.57	-0.73	0
107	SLU 59	0	265	6353	1.24	-0.47	0
107	SLU 60	-1	126	6246	8.02	-0.75	0
107	SLU 61	0	260	6442	1.68	-0.48	0
107	SLU 62	-1	130	6320	8.01	-0.76	0
107	SLU 63	0	264	6516	1.68	-0.49	0
107	SLU 64	-1	125	5980	7.35	-0.72	0
107	SLU 65	0	349	6307	-3.21	-0.27	0
107	SLU 66	-1	130	6094	7.41	-0.73	0
107	SLU 67	0	264	6291	1.08	-0.46	0
107	SLU 68	0	353	6381	-3.21	-0.28	0
107	SLU 69	-1	134	6168	7.41	-0.74	0
107	SLU 70	0	268	6365	1.07	-0.47	0
107	SLU 71	-1	133	6128	7.34	-0.73	0
107	SLU 72	0	268	6324	1.01	-0.46	0
107	SLU 73	0	357	6859	-2.19	-0.35	0
107	SLU 74	-1	138	6646	8.43	-0.8	0
107	SLU 75	0	273	6842	2.1	-0.54	0
107	SLU 76	0	361	6933	-2.19	-0.35	0
107	SLU 77	-1	143	6720	8.43	-0.81	0
107	SLU 78	0	277	6916	2.09	-0.54	0
107	SLU 79	-1	142	6680	8.36	-0.81	0
107	SLU 80	0	276	6876	2.02	-0.54	0
107	SLU 81	-1	137	6768	8.81	-0.82	0
107	SLU 82	0	271	6964	2.47	-0.56	0
107	SLU 83	-1	141	6842	8.8	-0.83	0
107	SLU 84	0	275	7038	2.47	-0.56	0
107	SLE RA 1	0	94	4485	5.48	-0.53	0
107	SLE RA 2	0	243	4703	-1.56	-0.24	0
107	SLE RA 3	0	97	4561	5.52	-0.54	0
107	SLE RA 4	0	186	4692	1.3	-0.37	0
107	SLE RA 5	0	246	4753	-1.56	-0.24	0
107	SLE RA 6	-1	100	4611	5.52	-0.55	0
107	SLE RA 7	0	189	4742	1.3	-0.37	0
107	SLE RA 8	0	99	4584	5.47	-0.54	0
107	SLE RA 9	0	189	4715	1.25	-0.37	0
107	SLE RA 10	0	248	5071	-0.88	-0.29	0
107	SLE RA 11	-1	103	4929	6.2	-0.59	0
107	SLE RA 12	0	192	5060	1.98	-0.42	0
107	SLE RA 13	0	251	5120	-0.88	-0.29	0
107	SLE RA 14	-1	105	4979	6.2	-0.6	0
107	SLE RA 15	0	195	5109	1.97	-0.42	0
107	SLE RA 16	-1	105	4952	6.15	-0.59	0
107	SLE RA 17	0	194	5082	1.93	-0.42	0
107	SLE RA 18	-1	102	5011	6.45	-0.61	0
107	SLE RA 19	0	191	5141	2.23	-0.43	0
107	SLE RA 20	-1	105	5060	6.45	-0.61	0
107	SLE RA 21	0	194	5191	2.23	-0.43	0
107	SLE FR 1	0	94	4485	5.48	-0.53	0
107	SLE FR 2	0	124	4529	4.07	-0.48	0
107	SLE FR 3	0	95	4505	5.48	-0.54	0
107	SLE FR 4	0	126	4687	4.37	-0.5	0

Nodo	Cont.	Reazione a traslazione			Reazione a rotazione		
Ind.	N.br.	x	y	z	x	y	z
107	SLE FR 5	-1	97	4663	5.77	-0.56	0
107	SLE FR 6	-1	98	4748	5.97	-0.57	0
107	SLE QP 1	0	94	4485	5.48	-0.53	0
107	SLE QP 2	-1	96	4643	5.77	-0.56	0
107	SLD 1	7	93	4712	6.03	5.79	0.01
107	SLD 2	7	93	4712	6.03	5.79	0.01
107	SLD 3	5	-245	3937	21.15	3.89	0.01
107	SLD 4	5	-245	3937	21.15	3.89	0.01
107	SLD 5	5	607	5840	-17.09	4.23	0.01
107	SLD 6	5	607	5840	-17.09	4.23	0.01
107	SLD 7	-2	-518	3255	33.32	-2.11	0
107	SLD 8	-2	-518	3255	33.32	-2.11	0
107	SLD 9	1	710	6031	-21.77	0.99	0
107	SLD 10	1	710	6031	-21.77	0.99	0
107	SLD 11	-6	-415	3446	28.63	-5.34	-0.01
107	SLD 12	-6	-415	3446	28.63	-5.34	-0.01
107	SLD 13	-6	437	5349	-9.6	-5	-0.01
107	SLD 14	-6	437	5349	-9.6	-5	-0.01
107	SLD 15	-8	100	4574	5.52	-6.9	-0.01
107	SLD 16	-8	100	4574	5.52	-6.9	-0.01
107	SLV 1	18	79	4781	6.74	15.08	0.03
107	SLV 2	18	79	4781	6.74	15.08	0.03
107	SLV 3	13	-713	2963	42.26	10.27	0.02
107	SLV 4	13	-713	2963	42.26	10.27	0.02
107	SLV 5	13	1293	7442	-47.82	11.43	0.02
107	SLV 6	13	1293	7442	-47.82	11.43	0.02
107	SLV 7	-4	-1348	1381	70.6	-4.6	-0.01
107	SLV 8	-4	-1348	1381	70.6	-4.6	-0.01
107	SLV 9	3	1541	7905	-59.06	3.49	0.01
107	SLV 10	3	1541	7905	-59.06	3.49	0.01
107	SLV 11	-14	-1100	1844	59.37	-12.54	-0.02
107	SLV 12	-14	-1100	1844	59.37	-12.54	-0.02
107	SLV 13	-14	905	6323	-30.72	-11.39	-0.02
107	SLV 14	-14	905	6323	-30.72	-11.39	-0.02
107	SLV 15	-19	113	4505	4.81	-16.19	-0.03
107	SLV 16	-19	113	4505	4.81	-16.19	-0.03
108	SLU 1	4	-112	4609	8.61	3.09	0
108	SLU 2	4	-119	4596	8.94	3.01	0
108	SLU 3	4	-108	4730	8.56	3.21	-0.01
108	SLU 4	4	-113	4723	8.75	3.16	-0.01
108	SLU 5	4	-116	4683	8.89	3.1	-0.01
108	SLU 6	4	-105	4817	8.51	3.3	-0.01
108	SLU 7	4	-110	4810	8.71	3.25	-0.01
108	SLU 8	4	-106	4782	8.52	3.27	-0.01
108	SLU 9	4	-111	4775	8.72	3.22	-0.01
108	SLU 10	5	-142	5272	10.4	3.44	-0.01
108	SLU 11	5	-131	5406	10.02	3.64	-0.01
108	SLU 12	5	-135	5399	10.21	3.59	-0.01
108	SLU 13	5	-139	5359	10.36	3.53	-0.01
108	SLU 14	5	-128	5493	9.97	3.73	-0.01
108	SLU 15	5	-132	5486	10.17	3.68	-0.01
108	SLU 16	5	-129	5458	9.99	3.7	-0.01
108	SLU 17	5	-133	5451	10.18	3.65	-0.01
108	SLU 18	5	-144	5574	10.7	3.7	-0.01
108	SLU 19	5	-148	5567	10.9	3.66	-0.01
108	SLU 20	5	-141	5661	10.66	3.79	-0.01
108	SLU 21	5	-146	5653	10.85	3.75	-0.01
108	SLU 22	5	-121	5153	9.45	3.43	-0.01
108	SLU 23	4	-129	5141	9.77	3.35	-0.01
108	SLU 24	5	-117	5275	9.39	3.55	-0.01
108	SLU 25	5	-122	5267	9.59	3.5	-0.01
108	SLU 26	5	-126	5228	9.73	3.44	-0.01
108	SLU 27	5	-115	5362	9.35	3.64	-0.01
108	SLU 28	5	-119	5354	9.54	3.6	-0.01
108	SLU 29	5	-116	5327	9.36	3.61	-0.01
108	SLU 30	5	-120	5319	9.55	3.57	-0.01
108	SLU 31	5	-151	5816	11.23	3.78	-0.01
108	SLU 32	5	-140	5950	10.85	3.98	-0.01
108	SLU 33	5	-144	5943	11.05	3.94	-0.01
108	SLU 34	5	-148	5903	11.19	3.87	-0.01
108	SLU 35	5	-137	6037	10.81	4.07	-0.01
108	SLU 36	5	-142	6030	11	4.03	-0.01
108	SLU 37	5	-138	6002	10.82	4.04	-0.01
108	SLU 38	5	-142	5995	11.02	4	-0.01
108	SLU 39	5	-153	6118	11.54	4.04	-0.01
108	SLU 40	5	-158	6111	11.73	4	-0.01
108	SLU 41	5	-151	6205	11.49	4.14	-0.01
108	SLU 42	5	-155	6198	11.69	4.09	-0.01
108	SLU 43	5	-142	5804	10.91	3.9	-0.01
108	SLU 44	5	-150	5792	11.24	3.82	-0.01
108	SLU 45	5	-138	5926	10.85	4.02	-0.01
108	SLU 46	5	-143	5919	11.05	3.97	-0.01
108	SLU 47	5	-147	5879	11.19	3.91	-0.01
108	SLU 48	6	-136	6013	10.81	4.11	-0.01
108	SLU 49	5	-140	6006	11.01	4.06	-0.01
108	SLU 50	6	-137	5978	10.82	4.08	-0.01
108	SLU 51	5	-141	5971	11.02	4.03	-0.01
108	SLU 52	6	-172	6468	12.7	4.25	-0.01
108	SLU 53	6	-161	6602	12.32	4.45	-0.01
108	SLU 54	6	-165	6595	12.51	4.4	-0.01
108	SLU 55	6	-169	6555	12.65	4.34	-0.01

Nodo	Cont.	Reazione a traslazione			Reazione a rotazione		
Ind.	N.br.	x	y	z	x	y	z
108	SLU 56	6	-158	6689	12.27	4.54	-0.01
108	SLU 57	6	-162	6682	12.47	4.49	-0.01
108	SLU 58	6	-159	6654	12.28	4.51	-0.01
108	SLU 59	6	-163	6647	12.48	4.46	-0.01
108	SLU 60	6	-174	6770	13	4.51	-0.01
108	SLU 61	6	-179	6762	13.19	4.46	-0.01
108	SLU 62	6	-171	6857	12.95	4.6	-0.01
108	SLU 63	6	-176	6849	13.15	4.56	-0.01
108	SLU 64	6	-152	6349	11.75	4.24	-0.01
108	SLU 65	6	-159	6337	12.07	4.16	-0.01
108	SLU 66	6	-148	6471	11.69	4.36	-0.01
108	SLU 67	6	-152	6463	11.89	4.31	-0.01
108	SLU 68	6	-156	6424	12.03	4.25	-0.01
108	SLU 69	6	-145	6557	11.65	4.45	-0.01
108	SLU 70	6	-149	6550	11.84	4.4	-0.01
108	SLU 71	6	-146	6523	11.66	4.42	-0.01
108	SLU 72	6	-150	6515	11.85	4.37	-0.01
108	SLU 73	6	-182	7012	13.53	4.59	-0.01
108	SLU 74	6	-170	7146	13.15	4.79	-0.01
108	SLU 75	6	-175	7139	13.35	4.74	-0.01
108	SLU 76	6	-179	7099	13.49	4.68	-0.01
108	SLU 77	7	-167	7233	13.11	4.88	-0.01
108	SLU 78	6	-172	7226	13.3	4.83	-0.01
108	SLU 79	6	-168	7198	13.12	4.85	-0.01
108	SLU 80	6	-173	7191	13.31	4.8	-0.01
108	SLU 81	6	-184	7314	13.83	4.85	-0.01
108	SLU 82	6	-188	7307	14.03	4.81	-0.01
108	SLU 83	7	-181	7401	13.79	4.94	-0.01
108	SLU 84	6	-185	7394	13.98	4.9	-0.01
108	SLE RA 1	4	-115	4764	8.85	3.18	-0.01
108	SLE RA 2	4	-120	4756	9.07	3.13	-0.01
108	SLE RA 3	4	-112	4845	8.81	3.27	-0.01
108	SLE RA 4	4	-115	4840	8.94	3.23	-0.01
108	SLE RA 5	4	-118	4814	9.04	3.19	-0.01
108	SLE RA 6	4	-110	4903	8.78	3.33	-0.01
108	SLE RA 7	4	-113	4898	8.92	3.3	-0.01
108	SLE RA 8	4	-111	4880	8.79	3.31	-0.01
108	SLE RA 9	4	-114	4875	8.92	3.28	-0.01
108	SLE RA 10	5	-135	5206	10.04	3.42	-0.01
108	SLE RA 11	5	-127	5296	9.79	3.55	-0.01
108	SLE RA 12	5	-130	5291	9.92	3.52	-0.01
108	SLE RA 13	5	-133	5264	10.01	3.48	-0.01
108	SLE RA 14	5	-125	5354	9.76	3.61	-0.01
108	SLE RA 15	5	-128	5349	9.89	3.58	-0.01
108	SLE RA 16	5	-126	5330	9.77	3.59	-0.01
108	SLE RA 17	5	-129	5326	9.9	3.56	-0.01
108	SLE RA 18	5	-136	5408	10.24	3.59	-0.01
108	SLE RA 19	5	-139	5403	10.37	3.56	-0.01
108	SLE RA 20	5	-134	5466	10.21	3.66	-0.01
108	SLE RA 21	5	-137	5461	10.34	3.62	-0.01
108	SLE FR 1	4	-115	4764	8.85	3.18	-0.01
108	SLE FR 2	4	-116	4762	8.9	3.17	-0.01
108	SLE FR 3	4	-114	4787	8.84	3.21	-0.01
108	SLE FR 4	4	-122	4956	9.31	3.3	-0.01
108	SLE FR 5	4	-120	4980	9.26	3.33	-0.01
108	SLE FR 6	5	-125	5086	9.55	3.39	-0.01
108	SLE QP 1	4	-115	4764	8.85	3.18	-0.01
108	SLE QP 2	4	-121	4957	9.27	3.31	-0.01
108	SLD 1	9	-27	4688	5.08	8.55	-0.01
108	SLD 2	9	-27	4688	5.08	8.55	-0.01
108	SLD 3	6	-501	4453	27.07	7.24	-0.01
108	SLD 4	6	-501	4453	27.07	7.24	-0.01
108	SLD 5	9	627	5233	-25.35	6.87	-0.01
108	SLD 6	9	627	5233	-25.35	6.87	-0.01
108	SLD 7	2	-954	4449	47.97	2.49	-0.01
108	SLD 8	2	-954	4449	47.97	2.49	-0.01
108	SLD 9	7	712	5465	-29.43	4.12	-0.01
108	SLD 10	7	712	5465	-29.43	4.12	-0.01
108	SLD 11	0	-869	4681	43.88	-0.26	0
108	SLD 12	0	-869	4681	43.88	-0.26	0
108	SLD 13	2	259	5462	-8.53	-0.62	0
108	SLD 14	2	259	5462	-8.53	-0.62	0
108	SLD 15	0	-216	5227	13.46	-1.93	0
108	SLD 16	0	-216	5227	13.46	-1.93	0
108	SLV 1	14	102	4347	-0.63	15.79	-0.02
108	SLV 2	14	102	4347	-0.63	15.79	-0.02
108	SLV 3	9	-1005	3796	50.69	12.71	-0.02
108	SLV 4	9	-1005	3796	50.69	12.71	-0.02
108	SLV 5	15	1625	5609	-71.54	11.72	-0.02
108	SLV 6	15	1625	5609	-71.54	11.72	-0.02
108	SLV 7	-2	-2065	3774	99.53	1.46	-0.01
108	SLV 8	-2	-2065	3774	99.53	1.46	-0.01
108	SLV 9	11	1823	6140	-80.99	5.16	0
108	SLV 10	11	1823	6140	-80.99	5.16	0
108	SLV 11	-6	-1867	4305	90.07	-5.11	0
108	SLV 12	-6	-1867	4305	90.07	-5.11	0
108	SLV 13	0	763	6118	-32.15	-6.1	0.01
108	SLV 14	0	763	6118	-32.15	-6.1	0.01
108	SLV 15	-5	-344	5567	19.17	-9.18	0.01
108	SLV 16	-5	-344	5567	19.17	-9.18	0.01
109	SLU 1	2	-81	4371	2.25	2.27	0.01

Nodo	Cont.	Reazione a traslazione			Reazione a rotazione		
Ind.	N.br.	x	y	z	x	y	z
109	SLU 2	3	-77	4343	2.13	2.5	0.01
109	SLU 3	2	-79	4480	2.15	2.33	0.01
109	SLU 4	2	-77	4464	2.08	2.47	0.01
109	SLU 5	3	-77	4419	2.09	2.54	0.01
109	SLU 6	2	-78	4556	2.11	2.38	0.01
109	SLU 7	3	-76	4540	2.04	2.52	0.01
109	SLU 8	2	-79	4523	2.17	2.36	0.01
109	SLU 9	2	-77	4507	2.1	2.49	0.01
109	SLU 10	3	-85	4952	2.33	2.69	0.01
109	SLU 11	2	-86	5089	2.35	2.53	0.01
109	SLU 12	3	-84	5072	2.28	2.67	0.01
109	SLU 13	3	-84	5028	2.29	2.74	0.01
109	SLU 14	2	-86	5165	2.31	2.57	0.01
109	SLU 15	3	-84	5149	2.24	2.71	0.01
109	SLU 16	2	-87	5132	2.37	2.55	0.01
109	SLU 17	3	-85	5115	2.3	2.69	0.01
109	SLU 18	2	-91	5240	2.53	2.55	0.01
109	SLU 19	2	-89	5224	2.46	2.69	0.01
109	SLU 20	2	-91	5316	2.49	2.59	0.01
109	SLU 21	3	-89	5300	2.42	2.73	0.01
109	SLU 22	2	-85	4872	2.36	2.6	0.01
109	SLU 23	3	-82	4844	2.24	2.83	0.01
109	SLU 24	3	-83	4981	2.26	2.66	0.01
109	SLU 25	3	-81	4965	2.19	2.8	0.01
109	SLU 26	3	-82	4920	2.2	2.87	0.01
109	SLU 27	3	-83	5057	2.23	2.71	0.01
109	SLU 28	3	-81	5041	2.16	2.85	0.01
109	SLU 29	3	-84	5024	2.28	2.69	0.01
109	SLU 30	3	-82	5008	2.21	2.82	0.01
109	SLU 31	3	-90	5453	2.44	3.02	0.01
109	SLU 32	3	-91	5590	2.46	2.86	0.01
109	SLU 33	3	-89	5573	2.39	3	0.01
109	SLU 34	3	-89	5529	2.4	3.07	0.01
109	SLU 35	3	-90	5666	2.42	2.9	0.01
109	SLU 36	3	-88	5650	2.35	3.04	0.01
109	SLU 37	3	-92	5633	2.48	2.88	0.01
109	SLU 38	3	-90	5616	2.41	3.02	0.01
109	SLU 39	3	-96	5741	2.64	2.88	0.01
109	SLU 40	3	-94	5725	2.57	3.02	0.01
109	SLU 41	3	-96	5817	2.6	2.92	0.01
109	SLU 42	3	-94	5801	2.53	3.06	0.01
109	SLU 43	3	-103	5510	2.89	2.83	0.01
109	SLU 44	3	-100	5483	2.77	3.06	0.01
109	SLU 45	3	-101	5620	2.79	2.9	0.01
109	SLU 46	3	-99	5603	2.72	3.04	0.01
109	SLU 47	3	-99	5559	2.73	3.11	0.01
109	SLU 48	3	-100	5696	2.75	2.95	0.01
109	SLU 49	3	-99	5679	2.68	3.08	0.01
109	SLU 50	3	-102	5662	2.81	2.92	0.01
109	SLU 51	3	-100	5646	2.74	3.06	0.01
109	SLU 52	3	-107	6091	2.96	3.26	0.01
109	SLU 53	3	-109	6228	2.99	3.1	0.01
109	SLU 54	3	-107	6212	2.91	3.23	0.01
109	SLU 55	3	-107	6167	2.92	3.3	0.01
109	SLU 56	3	-108	6304	2.95	3.14	0.01
109	SLU 57	3	-106	6288	2.88	3.28	0.01
109	SLU 58	3	-109	6271	3	3.12	0.01
109	SLU 59	3	-107	6255	2.93	3.26	0.01
109	SLU 60	3	-114	6379	3.16	3.12	0.01
109	SLU 61	3	-112	6363	3.09	3.25	0.01
109	SLU 62	3	-113	6456	3.13	3.16	0.01
109	SLU 63	3	-111	6439	3.05	3.3	0.01
109	SLU 64	3	-108	6011	3	3.16	0.01
109	SLU 65	3	-105	5984	2.88	3.39	0.02
109	SLU 66	3	-106	6121	2.9	3.23	0.01
109	SLU 67	3	-104	6104	2.83	3.37	0.01
109	SLU 68	3	-104	6060	2.84	3.44	0.02
109	SLU 69	3	-105	6197	2.86	3.28	0.01
109	SLU 70	3	-103	6180	2.79	3.41	0.01
109	SLU 71	3	-107	6163	2.92	3.25	0.01
109	SLU 72	3	-105	6147	2.85	3.39	0.01
109	SLU 73	3	-112	6592	3.07	3.59	0.02
109	SLU 74	3	-113	6729	3.1	3.43	0.01
109	SLU 75	3	-112	6713	3.03	3.56	0.01
109	SLU 76	4	-112	6669	3.04	3.63	0.02
109	SLU 77	3	-113	6806	3.06	3.47	0.01
109	SLU 78	3	-111	6789	2.99	3.61	0.02
109	SLU 79	3	-114	6772	3.11	3.45	0.01
109	SLU 80	3	-112	6756	3.04	3.59	0.01
109	SLU 81	3	-119	6880	3.28	3.45	0.01
109	SLU 82	3	-117	6864	3.21	3.58	0.01
109	SLU 83	3	-118	6957	3.24	3.49	0.01
109	SLU 84	3	-116	6940	3.17	3.63	0.02
109	SLE RA 1	2	-82	4514	2.28	2.36	0.01
109	SLE RA 2	3	-80	4495	2.2	2.51	0.01
109	SLE RA 3	2	-81	4587	2.22	2.41	0.01
109	SLE RA 4	2	-79	4576	2.17	2.5	0.01
109	SLE RA 5	3	-79	4546	2.18	2.54	0.01
109	SLE RA 6	2	-80	4638	2.19	2.44	0.01
109	SLE RA 7	2	-79	4627	2.14	2.53	0.01
109	SLE RA 8	2	-81	4615	2.23	2.42	0.01

Nodo	Cont.	Reazione a traslazione			Reazione a rotazione		
Ind.	N.br.	x	y	z	x	y	z
109	SLE RA 9	2	-80	4604	2.18	2.51	0.01
109	SLE RA 10	3	-85	4901	2.33	2.65	0.01
109	SLE RA 11	2	-86	4993	2.35	2.54	0.01
109	SLE RA 12	2	-84	4982	2.3	2.63	0.01
109	SLE RA 13	3	-84	4952	2.31	2.67	0.01
109	SLE RA 14	2	-85	5043	2.32	2.57	0.01
109	SLE RA 15	3	-84	5032	2.27	2.66	0.01
109	SLE RA 16	2	-86	5021	2.36	2.55	0.01
109	SLE RA 17	3	-85	5010	2.31	2.64	0.01
109	SLE RA 18	2	-89	5093	2.47	2.55	0.01
109	SLE RA 19	2	-88	5082	2.42	2.64	0.01
109	SLE RA 20	2	-89	5144	2.44	2.58	0.01
109	SLE RA 21	2	-87	5133	2.39	2.67	0.01
109	SLE FR 1	2	-82	4514	2.28	2.36	0.01
109	SLE FR 2	2	-81	4510	2.27	2.39	0.01
109	SLE FR 3	2	-82	4534	2.27	2.37	0.01
109	SLE FR 4	2	-84	4684	2.32	2.45	0.01
109	SLE FR 5	2	-84	4708	2.33	2.43	0.01
109	SLE FR 6	2	-86	4804	2.37	2.46	0.01
109	SLE QP 1	2	-82	4514	2.28	2.36	0.01
109	SLE QP 2	2	-84	4688	2.34	2.42	0.01
109	SLD 1	10	331	5238	-17.65	9.53	0.04
109	SLD 2	10	331	5238	-17.65	9.53	0.04
109	SLD 3	13	-137	5026	4.51	11.31	0.05
109	SLD 4	13	-137	5026	4.51	11.31	0.05
109	SLD 5	0	749	5175	-37.27	1.85	-0.01
109	SLD 6	0	749	5175	-37.27	1.85	-0.01
109	SLD 7	10	-809	4467	36.6	7.79	0.04
109	SLD 8	10	-809	4467	36.6	7.79	0.04
109	SLD 9	-5	640	4908	-31.93	-2.95	-0.03
109	SLD 10	-5	640	4908	-31.93	-2.95	-0.03
109	SLD 11	4	-917	4200	41.95	2.98	0.02
109	SLD 12	4	-917	4200	41.95	2.98	0.02
109	SLD 13	-8	-31	4350	0.16	-6.48	-0.03
109	SLD 14	-8	-31	4350	0.16	-6.48	-0.03
109	SLD 15	-6	-499	4137	22.32	-4.7	-0.02
109	SLD 16	-6	-499	4137	22.32	-4.7	-0.02
109	SLV 1	21	879	5952	-44.08	19.25	0.07
109	SLV 2	21	879	5952	-44.08	19.25	0.07
109	SLV 3	27	-211	5454	7.63	23.68	0.11
109	SLV 4	27	-211	5454	7.63	23.68	0.11
109	SLV 5	-3	1859	5822	-90	0.74	-0.03
109	SLV 6	-3	1859	5822	-90	0.74	-0.03
109	SLV 7	20	-1776	4163	82.34	15.52	0.1
109	SLV 8	20	-1776	4163	82.34	15.52	0.1
109	SLV 9	-16	1608	5212	-77.67	-10.68	-0.08
109	SLV 10	-16	1608	5212	-77.67	-10.68	-0.08
109	SLV 11	7	-2027	3553	94.68	4.09	0.05
109	SLV 12	7	-2027	3553	94.68	4.09	0.05
109	SLV 13	-23	43	3921	-2.95	-18.84	-0.09
109	SLV 14	-23	43	3921	-2.95	-18.84	-0.09
109	SLV 15	-16	-1047	3423	48.75	-14.41	-0.05
109	SLV 16	-16	-1047	3423	48.75	-14.41	-0.05
110	SLU 1	4	-68	537	1.82	2.07	-0.02
110	SLU 2	4	-67	539	1.79	2.23	-0.02
110	SLU 3	4	-72	534	1.92	2.12	-0.02
110	SLU 4	4	-71	535	1.9	2.22	-0.02
110	SLU 5	4	-69	536	1.85	2.27	-0.02
110	SLU 6	4	-74	532	1.99	2.16	-0.02
110	SLU 7	4	-73	533	1.96	2.26	-0.02
110	SLU 8	4	-73	533	1.95	2.14	-0.02
110	SLU 9	4	-72	534	1.93	2.24	-0.02
110	SLU 10	5	-82	657	2.15	2.6	-0.03
110	SLU 11	4	-87	652	2.28	2.49	-0.03
110	SLU 12	5	-86	653	2.26	2.59	-0.03
110	SLU 13	5	-84	655	2.21	2.64	-0.03
110	SLU 14	5	-89	650	2.35	2.52	-0.03
110	SLU 15	5	-88	651	2.32	2.62	-0.03
110	SLU 16	5	-88	651	2.31	2.51	-0.03
110	SLU 17	5	-87	652	2.29	2.61	-0.03
110	SLU 18	5	-89	706	2.34	2.59	-0.03
110	SLU 19	5	-88	707	2.32	2.69	-0.03
110	SLU 20	5	-92	704	2.4	2.62	-0.03
110	SLU 21	5	-91	705	2.38	2.73	-0.03
110	SLU 22	4	-84	558	2.23	2.36	-0.02
110	SLU 23	4	-82	560	2.19	2.52	-0.03
110	SLU 24	4	-87	555	2.33	2.41	-0.03
110	SLU 25	4	-87	556	2.3	2.51	-0.03
110	SLU 26	4	-85	558	2.26	2.56	-0.03
110	SLU 27	4	-90	553	2.39	2.45	-0.03
110	SLU 28	4	-89	554	2.37	2.55	-0.03
110	SLU 29	4	-89	554	2.36	2.43	-0.03
110	SLU 30	4	-88	555	2.34	2.53	-0.03
110	SLU 31	5	-97	678	2.55	2.89	-0.03
110	SLU 32	5	-102	674	2.69	2.78	-0.03
110	SLU 33	5	-101	674	2.67	2.88	-0.03
110	SLU 34	5	-100	676	2.62	2.93	-0.03
110	SLU 35	5	-105	671	2.75	2.81	-0.03
110	SLU 36	5	-104	672	2.73	2.91	-0.03
110	SLU 37	5	-103	673	2.72	2.8	-0.03
110	SLU 38	5	-103	673	2.7	2.9	-0.03

Nodo	Cont.	Reazione a traslazione			Reazione a rotazione		
Ind.	N.br.	x	y	z	x	y	z
110	SLU 39	5	-105	727	2.75	2.88	-0.03
110	SLU 40	5	-104	728	2.72	2.98	-0.03
110	SLU 41	5	-107	725	2.81	2.91	-0.03
110	SLU 42	6	-106	726	2.79	3.02	-0.03
110	SLU 43	4	-83	691	2.23	2.59	-0.03
110	SLU 44	5	-82	692	2.19	2.75	-0.03
110	SLU 45	5	-87	688	2.33	2.64	-0.03
110	SLU 46	5	-86	689	2.31	2.74	-0.03
110	SLU 47	5	-84	690	2.26	2.79	-0.03
110	SLU 48	5	-89	686	2.39	2.68	-0.03
110	SLU 49	5	-88	687	2.37	2.78	-0.03
110	SLU 50	5	-88	687	2.36	2.66	-0.03
110	SLU 51	5	-87	688	2.34	2.76	-0.03
110	SLU 52	6	-97	811	2.55	3.12	-0.03
110	SLU 53	5	-102	806	2.69	3.01	-0.03
110	SLU 54	6	-101	807	2.67	3.11	-0.03
110	SLU 55	6	-99	809	2.62	3.16	-0.03
110	SLU 56	5	-104	804	2.75	3.04	-0.03
110	SLU 57	6	-103	805	2.73	3.15	-0.03
110	SLU 58	5	-103	805	2.72	3.03	-0.03
110	SLU 59	6	-102	806	2.7	3.13	-0.03
110	SLU 60	6	-104	860	2.75	3.11	-0.03
110	SLU 61	6	-104	861	2.72	3.21	-0.03
110	SLU 62	6	-107	858	2.81	3.14	-0.03
110	SLU 63	6	-106	859	2.79	3.25	-0.03
110	SLU 64	5	-99	712	2.64	2.88	-0.03
110	SLU 65	5	-97	714	2.6	3.04	-0.03
110	SLU 66	5	-102	709	2.73	2.93	-0.03
110	SLU 67	5	-102	710	2.71	3.03	-0.03
110	SLU 68	5	-100	712	2.66	3.08	-0.03
110	SLU 69	5	-105	707	2.8	2.97	-0.03
110	SLU 70	5	-104	708	2.78	3.07	-0.03
110	SLU 71	5	-104	708	2.77	2.95	-0.03
110	SLU 72	5	-103	709	2.74	3.05	-0.03
110	SLU 73	6	-112	832	2.96	3.41	-0.04
110	SLU 74	6	-117	827	3.1	3.3	-0.04
110	SLU 75	6	-116	828	3.07	3.4	-0.04
110	SLU 76	6	-115	830	3.03	3.45	-0.04
110	SLU 77	6	-120	825	3.16	3.33	-0.04
110	SLU 78	6	-119	826	3.14	3.43	-0.04
110	SLU 79	6	-119	826	3.13	3.32	-0.04
110	SLU 80	6	-118	827	3.11	3.42	-0.04
110	SLU 81	6	-120	881	3.15	3.4	-0.04
110	SLU 82	6	-119	882	3.13	3.5	-0.04
110	SLU 83	6	-122	879	3.22	3.43	-0.04
110	SLU 84	6	-122	880	3.2	3.54	-0.04
110	SLE RA 1	4	-73	543	1.94	2.15	-0.02
110	SLE RA 2	4	-72	544	1.91	2.26	-0.02
110	SLE RA 3	4	-75	541	2	2.19	-0.02
110	SLE RA 4	4	-74	542	1.99	2.25	-0.02
110	SLE RA 5	4	-73	543	1.96	2.29	-0.02
110	SLE RA 6	4	-77	540	2.05	2.21	-0.02
110	SLE RA 7	4	-76	540	2.03	2.28	-0.02
110	SLE RA 8	4	-76	540	2.03	2.2	-0.02
110	SLE RA 9	4	-75	541	2.01	2.27	-0.02
110	SLE RA 10	4	-82	623	2.15	2.5	-0.03
110	SLE RA 11	4	-85	620	2.24	2.43	-0.03
110	SLE RA 12	4	-84	621	2.23	2.5	-0.03
110	SLE RA 13	4	-83	622	2.2	2.53	-0.03
110	SLE RA 14	4	-87	619	2.29	2.45	-0.03
110	SLE RA 15	4	-86	619	2.27	2.52	-0.03
110	SLE RA 16	4	-86	619	2.27	2.44	-0.03
110	SLE RA 17	4	-85	620	2.25	2.51	-0.03
110	SLE RA 18	5	-87	656	2.28	2.5	-0.03
110	SLE RA 19	5	-86	656	2.27	2.56	-0.03
110	SLE RA 20	5	-88	654	2.33	2.52	-0.03
110	SLE RA 21	5	-88	655	2.31	2.59	-0.03
110	SLE FR 1	4	-73	543	1.94	2.15	-0.02
110	SLE FR 2	4	-72	543	1.93	2.17	-0.02
110	SLE FR 3	4	-73	543	1.96	2.16	-0.02
110	SLE FR 4	4	-77	577	2.04	2.27	-0.02
110	SLE FR 5	4	-77	576	2.06	2.26	-0.02
110	SLE FR 6	4	-80	600	2.11	2.32	-0.02
110	SLE QP 1	4	-73	543	1.94	2.15	-0.02
110	SLE QP 2	4	-77	577	2.04	2.25	-0.02
110	SLD 1	14	1	628	0.09	10.12	-0.09
110	SLD 2	14	1	628	0.09	10.12	-0.09
110	SLD 3	16	-125	550	3.27	11.52	-0.1
110	SLD 4	16	-125	550	3.27	11.52	-0.1
110	SLD 5	4	137	710	-3.36	2.49	-0.02
110	SLD 6	4	137	710	-3.36	2.49	-0.02
110	SLD 7	10	-282	451	7.23	7.16	-0.06
110	SLD 8	10	-282	451	7.23	7.16	-0.06
110	SLD 9	-2	128	703	-3.14	-2.65	0.02
110	SLD 10	-2	128	703	-3.14	-2.65	0.02
110	SLD 11	4	-291	444	7.44	2.02	-0.02
110	SLD 12	4	-291	444	7.44	2.02	-0.02
110	SLD 13	-8	-29	604	0.82	-7.02	0.05
110	SLD 14	-8	-29	604	0.82	-7.02	0.05
110	SLD 15	-6	-154	527	3.99	-5.62	0.04
110	SLD 16	-6	-154	527	3.99	-5.62	0.04

Nodo	Cont.	Reazione a traslazione			Reazione a rotazione		
Ind.	N.br.	x	y	z	x	y	z
110	SLV 1	27	106	696	-2.55	21.04	-0.17
110	SLV 2	27	106	696	-2.55	21.04	-0.17
110	SLV 3	32	-189	514	4.88	24.48	-0.2
110	SLV 4	32	-189	514	4.88	24.48	-0.2
110	SLV 5	4	424	889	-10.6	2.66	-0.02
110	SLV 6	4	424	889	-10.6	2.66	-0.02
110	SLV 7	19	-556	282	14.15	14.15	-0.12
110	SLV 8	19	-556	282	14.15	14.15	-0.12
110	SLV 9	-11	403	872	-10.07	-9.64	0.07
110	SLV 10	-11	403	872	-10.07	-9.64	0.07
110	SLV 11	4	-578	265	14.68	1.84	-0.02
110	SLV 12	4	-578	265	14.68	1.84	-0.02
110	SLV 13	-24	35	640	-0.79	-19.98	0.15
110	SLV 14	-24	35	640	-0.79	-19.98	0.15
110	SLV 15	-19	-259	458	6.63	-16.53	0.12
110	SLV 16	-19	-259	458	6.63	-16.53	0.12
111	SLU 1	7	623	5365	-24.32	7.68	-0.01
111	SLU 2	-2	628	5489	-25.11	0.27	-0.01
111	SLU 3	8	641	5518	-24.98	7.93	-0.01
111	SLU 4	2	643	5592	-25.45	3.48	-0.01
111	SLU 5	-1	635	5588	-25.39	0.43	-0.01
111	SLU 6	8	648	5617	-25.26	8.09	-0.01
111	SLU 7	2	651	5692	-25.73	3.65	-0.01
111	SLU 8	8	639	5563	-24.88	8.01	-0.01
111	SLU 9	2	641	5637	-25.35	3.56	-0.01
111	SLU 10	0	700	6114	-27.96	1.34	-0.01
111	SLU 11	9	713	6143	-27.83	9	-0.01
111	SLU 12	3	715	6218	-28.31	4.56	-0.01
111	SLU 13	0	708	6213	-28.24	1.51	-0.01
111	SLU 14	9	720	6242	-28.11	9.17	-0.01
111	SLU 15	4	723	6317	-28.59	4.72	-0.01
111	SLU 16	9	711	6188	-27.73	9.08	-0.01
111	SLU 17	3	713	6262	-28.21	4.64	-0.01
111	SLU 18	9	726	6258	-28.4	9.21	-0.01
111	SLU 19	4	729	6332	-28.87	4.77	-0.01
111	SLU 20	9	734	6357	-28.68	9.38	-0.01
111	SLU 21	4	737	6431	-29.15	4.93	-0.01
111	SLU 22	8	696	5966	-27.17	8.7	-0.01
111	SLU 23	-1	700	6091	-27.96	1.29	-0.01
111	SLU 24	9	713	6120	-27.83	8.95	-0.01
111	SLU 25	3	716	6194	-28.31	4.51	-0.01
111	SLU 26	0	708	6190	-28.24	1.46	-0.01
111	SLU 27	9	721	6219	-28.11	9.12	-0.01
111	SLU 28	3	724	6294	-28.59	4.67	-0.01
111	SLU 29	9	711	6165	-27.73	9.03	-0.01
111	SLU 30	3	714	6239	-28.21	4.59	-0.01
111	SLU 31	1	772	6716	-30.81	2.37	-0.01
111	SLU 32	10	785	6745	-30.69	10.03	-0.01
111	SLU 33	4	788	6819	-31.16	5.58	-0.01
111	SLU 34	1	780	6815	-31.09	2.53	-0.01
111	SLU 35	10	793	6844	-30.97	10.19	-0.01
111	SLU 36	5	796	6919	-31.44	5.75	-0.01
111	SLU 37	10	783	6790	-30.59	10.11	-0.01
111	SLU 38	4	786	6864	-31.06	5.66	-0.01
111	SLU 39	10	799	6860	-31.25	10.23	-0.01
111	SLU 40	5	801	6934	-31.72	5.79	-0.01
111	SLU 41	10	806	6959	-31.53	10.4	-0.01
111	SLU 42	5	809	7033	-32	5.95	-0.01
111	SLU 43	9	785	6768	-30.64	9.63	-0.01
111	SLU 44	0	790	6892	-31.43	2.22	-0.01
111	SLU 45	10	803	6921	-31.3	9.88	-0.01
111	SLU 46	4	805	6995	-31.77	5.44	-0.01
111	SLU 47	1	798	6991	-31.71	2.39	-0.01
111	SLU 48	10	810	7020	-31.58	10.05	-0.01
111	SLU 49	4	813	7095	-32.05	5.6	-0.01
111	SLU 50	10	801	6966	-31.2	9.96	-0.01
111	SLU 51	4	803	7040	-31.67	5.52	-0.01
111	SLU 52	1	862	7517	-34.28	3.29	-0.01
111	SLU 53	11	875	7546	-34.15	10.96	-0.01
111	SLU 54	5	877	7621	-34.63	6.51	-0.01
111	SLU 55	2	870	7616	-34.56	3.46	-0.01
111	SLU 56	11	882	7645	-34.43	11.12	-0.01
111	SLU 57	5	885	7720	-34.91	6.67	-0.01
111	SLU 58	11	873	7591	-34.05	11.03	-0.01
111	SLU 59	5	876	7665	-34.53	6.59	-0.01
111	SLU 60	11	888	7661	-34.72	11.16	-0.01
111	SLU 61	5	891	7735	-35.19	6.72	-0.01
111	SLU 62	11	896	7760	-35	11.33	-0.01
111	SLU 63	6	899	7834	-35.47	6.88	-0.01
111	SLU 64	10	858	7369	-33.49	10.65	-0.01
111	SLU 65	1	862	7494	-34.28	3.24	-0.01
111	SLU 66	11	875	7523	-34.15	10.91	-0.01
111	SLU 67	5	878	7597	-34.62	6.46	-0.01
111	SLU 68	2	870	7593	-34.56	3.41	-0.01
111	SLU 69	11	883	7622	-34.43	11.07	-0.01
111	SLU 70	5	886	7696	-34.9	6.62	-0.01
111	SLU 71	11	873	7568	-34.05	10.98	-0.01
111	SLU 72	5	876	7642	-34.52	6.54	-0.01
111	SLU 73	2	934	8119	-37.13	4.32	-0.01
111	SLU 74	12	947	8148	-37	11.98	-0.01
111	SLU 75	6	950	8222	-37.48	7.53	-0.01

Nodo	Cont.	Reazione a traslazione			Reazione a rotazione		
Ind.	N.br.	x	y	z	x	y	z
111	SLU 76	3	942	8218	-37.41	4.48	-0.01
111	SLU 77	12	955	8247	-37.28	12.14	-0.01
111	SLU 78	6	958	8322	-37.76	7.7	-0.01
111	SLU 79	12	945	8193	-36.9	12.06	-0.01
111	SLU 80	6	948	8267	-37.38	7.61	-0.01
111	SLU 81	12	961	8263	-37.57	12.19	-0.01
111	SLU 82	6	963	8337	-38.04	7.74	-0.01
111	SLU 83	12	968	8362	-37.85	12.35	-0.01
111	SLU 84	7	971	8436	-38.32	7.91	-0.01
111	SLE RA 1	8	644	5537	-25.14	7.97	-0.01
111	SLE RA 2	2	647	5619	-25.66	3.03	-0.01
111	SLE RA 3	8	656	5639	-25.58	8.14	-0.01
111	SLE RA 4	4	657	5688	-25.89	5.17	-0.01
111	SLE RA 5	2	652	5685	-25.85	3.14	-0.01
111	SLE RA 6	8	661	5705	-25.76	8.25	-0.01
111	SLE RA 7	4	663	5755	-26.08	5.28	-0.01
111	SLE RA 8	8	654	5669	-25.51	8.19	-0.01
111	SLE RA 9	4	656	5718	-25.82	5.23	-0.01
111	SLE RA 10	2	695	6036	-27.56	3.75	-0.01
111	SLE RA 11	9	704	6056	-27.48	8.85	-0.01
111	SLE RA 12	5	705	6105	-27.79	5.89	-0.01
111	SLE RA 13	3	700	6102	-27.75	3.86	-0.01
111	SLE RA 14	9	709	6122	-27.66	8.96	-0.01
111	SLE RA 15	5	711	6171	-27.98	6	-0.01
111	SLE RA 16	9	702	6086	-27.41	8.91	-0.01
111	SLE RA 17	5	704	6135	-27.73	5.94	-0.01
111	SLE RA 18	9	713	6132	-27.85	8.99	-0.01
111	SLE RA 19	5	714	6182	-28.17	6.03	-0.01
111	SLE RA 20	9	718	6198	-28.04	9.1	-0.01
111	SLE RA 21	5	720	6248	-28.36	6.14	-0.01
111	SLE FR 1	8	644	5537	-25.14	7.97	-0.01
111	SLE FR 2	7	645	5553	-25.24	6.98	-0.01
111	SLE FR 3	8	646	5563	-25.21	8.01	-0.01
111	SLE FR 4	7	665	5732	-26.06	7.29	-0.01
111	SLE FR 5	8	667	5742	-26.03	8.32	-0.01
111	SLE FR 6	8	678	5834	-26.49	8.48	-0.01
111	SLE QP 1	8	644	5537	-25.14	7.97	-0.01
111	SLE QP 2	8	665	5715	-25.95	8.28	-0.01
111	SLD 1	12	1048	7733	-42	16.07	-0.02
111	SLD 2	12	1048	7733	-42	16.07	-0.02
111	SLD 3	22	540	6977	-20.14	23.17	-0.02
111	SLD 4	22	540	6977	-20.14	23.17	-0.02
111	SLD 5	-5	1550	7468	-63.92	-0.14	-0.02
111	SLD 6	-5	1550	7468	-63.92	-0.14	-0.02
111	SLD 7	27	-143	4946	8.95	23.5	-0.01
111	SLD 8	27	-143	4946	8.95	23.5	-0.01
111	SLD 9	-11	1472	6484	-60.85	-6.95	-0.01
111	SLD 10	-11	1472	6484	-60.85	-6.95	-0.01
111	SLD 11	21	-221	3963	12.02	16.7	0
111	SLD 12	21	-221	3963	12.02	16.7	0
111	SLD 13	-6	789	4454	-31.76	-6.61	0
111	SLD 14	-6	789	4454	-31.76	-6.61	0
111	SLD 15	4	281	3697	-9.9	0.48	0.01
111	SLD 16	4	281	3697	-9.9	0.48	0.01
111	SLV 1	17	1566	10408	-63.7	26.24	-0.05
111	SLV 2	17	1566	10408	-63.7	26.24	-0.05
111	SLV 3	41	379	8639	-12.59	44.08	-0.04
111	SLV 4	41	379	8639	-12.59	44.08	-0.04
111	SLV 5	-26	2737	9805	-114.79	-13.38	-0.03
111	SLV 6	-26	2737	9805	-114.79	-13.38	-0.03
111	SLV 7	55	-1223	3910	55.57	46.07	-0.01
111	SLV 8	55	-1223	3910	55.57	46.07	-0.01
111	SLV 9	-39	2552	7520	-107.48	-29.51	-0.01
111	SLV 10	-39	2552	7520	-107.48	-29.51	-0.01
111	SLV 11	42	-1408	1625	62.89	29.94	0.01
111	SLV 12	42	-1408	1625	62.89	29.94	0.01
111	SLV 13	-25	950	2791	-39.31	-27.52	0.02
111	SLV 14	-25	950	2791	-39.31	-27.52	0.02
111	SLV 15	-1	-237	1022	11.8	-9.69	0.03
111	SLV 16	-1	-237	1022	11.8	-9.69	0.03
112	SLU 1	0	169	3356	-8.01	0.25	0
112	SLU 2	-3	399	3427	-18.76	-2.28	0
112	SLU 3	0	176	3445	-8.31	0.27	0
112	SLU 4	-2	314	3487	-14.76	-1.25	0
112	SLU 5	-3	404	3485	-18.97	-2.27	0
112	SLU 6	0	181	3502	-8.52	0.28	0
112	SLU 7	-2	319	3544	-14.97	-1.24	0
112	SLU 8	0	178	3471	-8.43	0.27	0
112	SLU 9	-2	317	3514	-14.88	-1.25	0
112	SLU 10	-3	413	3889	-19.44	-2.23	0
112	SLU 11	0	190	3906	-8.99	0.32	0
112	SLU 12	-2	328	3949	-15.44	-1.2	0
112	SLU 13	-3	418	3946	-19.65	-2.21	0
112	SLU 14	0	195	3963	-9.2	0.33	0
112	SLU 15	-2	333	4006	-15.65	-1.18	0
112	SLU 16	0	193	3932	-9.11	0.32	0
112	SLU 17	-2	331	3975	-15.56	-1.19	0
112	SLU 18	0	189	4016	-8.99	0.32	0
112	SLU 19	-2	328	4058	-15.43	-1.19	0
112	SLU 20	0	194	4073	-9.2	0.33	0
112	SLU 21	-2	332	4116	-15.64	-1.18	0

Nodo	Cont.	Reazione a traslazione			Reazione a rotazione		
Ind.	N.br.	x	y	z	x	y	z
112	SLU 22	0	186	3784	-8.81	0.31	0
112	SLU 23	-3	417	3855	-19.56	-2.22	0
112	SLU 24	0	193	3872	-9.1	0.33	0
112	SLU 25	-2	331	3915	-15.55	-1.19	0
112	SLU 26	-3	421	3913	-19.77	-2.21	0
112	SLU 27	0	198	3930	-9.31	0.34	0
112	SLU 28	-2	336	3972	-15.76	-1.18	0
112	SLU 29	0	196	3899	-9.23	0.33	0
112	SLU 30	-2	334	3941	-15.68	-1.19	0
112	SLU 31	-3	431	4317	-20.24	-2.17	0
112	SLU 32	0	208	4334	-9.78	0.38	0
112	SLU 33	-2	346	4377	-16.23	-1.14	0
112	SLU 34	-3	436	4374	-20.45	-2.16	0
112	SLU 35	0	212	4391	-10	0.39	0
112	SLU 36	-2	351	4434	-16.44	-1.13	0
112	SLU 37	0	210	4360	-9.91	0.38	0
112	SLU 38	-2	349	4403	-16.36	-1.14	0
112	SLU 39	0	207	4444	-9.78	0.38	0
112	SLU 40	-2	345	4486	-16.23	-1.13	0
112	SLU 41	0	212	4501	-9.99	0.39	0
112	SLU 42	-2	350	4543	-16.44	-1.12	0
112	SLU 43	0	213	4217	-10.15	0.3	0
112	SLU 44	-3	444	4288	-20.89	-2.22	0
112	SLU 45	0	220	4305	-10.44	0.32	0
112	SLU 46	-2	358	4347	-16.89	-1.19	0
112	SLU 47	-3	448	4345	-21.1	-2.21	0
112	SLU 48	0	225	4362	-10.65	0.33	0
112	SLU 49	-2	363	4405	-17.1	-1.18	0
112	SLU 50	0	223	4331	-10.57	0.32	0
112	SLU 51	-2	361	4374	-17.01	-1.19	0
112	SLU 52	-3	458	4749	-21.57	-2.17	0
112	SLU 53	0	235	4766	-11.12	0.37	0
112	SLU 54	-2	373	4809	-17.57	-1.14	0
112	SLU 55	-3	463	4806	-21.78	-2.16	0
112	SLU 56	0	240	4823	-11.33	0.38	0
112	SLU 57	-2	378	4866	-17.78	-1.13	0
112	SLU 58	0	237	4793	-11.25	0.38	0
112	SLU 59	-2	376	4835	-17.69	-1.14	0
112	SLU 60	0	234	4876	-11.12	0.38	0
112	SLU 61	-2	372	4918	-17.57	-1.14	0
112	SLU 62	0	239	4933	-11.33	0.39	0
112	SLU 63	-2	377	4976	-17.78	-1.13	0
112	SLU 64	0	231	4645	-10.94	0.36	0
112	SLU 65	-3	461	4716	-21.69	-2.16	0
112	SLU 66	0	238	4733	-11.24	0.38	0
112	SLU 67	-2	376	4775	-17.69	-1.13	0
112	SLU 68	-3	466	4773	-21.9	-2.15	0
112	SLU 69	0	243	4790	-11.45	0.39	0
112	SLU 70	-2	381	4833	-17.9	-1.12	0
112	SLU 71	0	241	4759	-11.36	0.38	0
112	SLU 72	-2	379	4802	-17.81	-1.13	0
112	SLU 73	-3	476	5177	-22.37	-2.11	0
112	SLU 74	0	252	5194	-11.92	0.43	0
112	SLU 75	-2	390	5237	-18.37	-1.08	0
112	SLU 76	-3	480	5234	-22.58	-2.1	0
112	SLU 77	0	257	5251	-12.13	0.44	0
112	SLU 78	-2	395	5294	-18.58	-1.07	0
112	SLU 79	0	255	5221	-12.04	0.43	0
112	SLU 80	-2	393	5263	-18.49	-1.08	0
112	SLU 81	0	252	5304	-11.91	0.44	0
112	SLU 82	-2	390	5346	-18.36	-1.08	0
112	SLU 83	0	256	5361	-12.12	0.45	0
112	SLU 84	-2	394	5404	-18.57	-1.07	0
112	SLE RA 1	0	174	3479	-8.24	0.26	0
112	SLE RA 2	-2	327	3526	-15.41	-1.42	0
112	SLE RA 3	0	178	3537	-8.44	0.28	0
112	SLE RA 4	-1	271	3566	-12.74	-0.73	0
112	SLE RA 5	-2	331	3564	-15.55	-1.41	0
112	SLE RA 6	0	182	3576	-8.58	0.28	0
112	SLE RA 7	-1	274	3604	-12.88	-0.73	0
112	SLE RA 8	0	180	3555	-8.52	0.28	0
112	SLE RA 9	-1	272	3583	-12.82	-0.73	0
112	SLE RA 10	-2	337	3834	-15.86	-1.38	0
112	SLE RA 11	0	188	3845	-8.89	0.31	0
112	SLE RA 12	-1	280	3873	-13.19	-0.7	0
112	SLE RA 13	-2	340	3872	-16	-1.38	0
112	SLE RA 14	0	191	3883	-9.03	0.32	0
112	SLE RA 15	-1	283	3912	-13.33	-0.69	0
112	SLE RA 16	0	190	3863	-8.97	0.31	0
112	SLE RA 17	-1	282	3891	-13.27	-0.7	0
112	SLE RA 18	0	188	3918	-8.89	0.31	0
112	SLE RA 19	-1	280	3947	-13.19	-0.7	0
112	SLE RA 20	0	191	3956	-9.03	0.32	0
112	SLE RA 21	-1	283	3985	-13.33	-0.69	0
112	SLE FR 1	0	174	3479	-8.24	0.26	0
112	SLE FR 2	-1	205	3488	-9.67	-0.07	0
112	SLE FR 3	0	175	3494	-8.3	0.27	0
112	SLE FR 4	0	209	3620	-9.87	-0.06	0
112	SLE FR 5	0	179	3626	-8.49	0.28	0
112	SLE FR 6	0	181	3698	-8.56	0.29	0
112	SLE QP 1	0	174	3479	-8.24	0.26	0

Nodo	Cont.	Reazione a traslazione			Reazione a rotazione		
Ind.	N.br.	x	y	z	x	y	z
112	SLE QP 2	0	178	3610	-8.43	0.28	0
112	SLD 1	4	594	3924	-27.38	2.47	0
112	SLD 2	4	594	3924	-27.38	2.47	0
112	SLD 3	1	143	3608	-6.52	4.7	-0.01
112	SLD 4	1	143	3608	-6.52	4.7	-0.01
112	SLD 5	6	986	4184	-45.77	-2.44	0
112	SLD 6	6	986	4184	-45.77	-2.44	0
112	SLD 7	-4	-516	3130	23.79	4.99	-0.01
112	SLD 8	-4	-516	3130	23.79	4.99	-0.01
112	SLD 9	4	872	4091	-40.66	-4.43	0
112	SLD 10	4	872	4091	-40.66	-4.43	0
112	SLD 11	-6	-630	3037	28.9	3	0
112	SLD 12	-6	-630	3037	28.9	3	0
112	SLD 13	-1	213	3613	-10.35	-4.14	0
112	SLD 14	-1	213	3613	-10.35	-4.14	0
112	SLD 15	-4	-238	3297	10.52	-1.91	0
112	SLD 16	-4	-238	3297	10.52	-1.91	0
112	SLV 1	9	1169	4342	-53.65	5.41	-0.01
112	SLV 2	9	1169	4342	-53.65	5.41	-0.01
112	SLV 3	2	112	3595	-4.71	11.08	-0.01
112	SLV 4	2	112	3595	-4.71	11.08	-0.01
112	SLV 5	14	2078	4962	-96.23	-6.78	0.01
112	SLV 6	14	2078	4962	-96.23	-6.78	0.01
112	SLV 7	-11	-1444	2474	66.91	12.12	-0.01
112	SLV 8	-11	-1444	2474	66.91	12.12	-0.01
112	SLV 9	11	1800	4747	-83.78	-11.56	0.01
112	SLV 10	11	1800	4747	-83.78	-11.56	0.01
112	SLV 11	-14	-1722	2259	79.36	7.34	-0.01
112	SLV 12	-14	-1722	2259	79.36	7.34	-0.01
112	SLV 13	-2	244	3626	-12.16	-10.52	0.01
112	SLV 14	-2	244	3626	-12.16	-10.52	0.01
112	SLV 15	-9	-813	2879	36.78	-4.85	0.01
112	SLV 16	-9	-813	2879	36.78	-4.85	0.01
113	SLU 1	0	258	926	-8.83	-0.54	0
113	SLU 2	0	303	965	-10.78	0.27	0
113	SLU 3	0	265	929	-9.05	-0.56	0
113	SLU 4	0	292	952	-10.22	-0.07	0
113	SLU 5	0	307	966	-10.9	0.26	0
113	SLU 6	0	270	930	-9.17	-0.57	0
113	SLU 7	0	297	953	-10.35	-0.09	0
113	SLU 8	0	267	928	-9.08	-0.57	0
113	SLU 9	0	294	952	-10.25	-0.08	0
113	SLU 10	0	335	979	-11.8	0.2	0
113	SLU 11	0	297	942	-10.07	-0.63	0
113	SLU 12	0	324	966	-11.24	-0.14	0
113	SLU 13	0	339	980	-11.92	0.19	0
113	SLU 14	0	301	943	-10.19	-0.64	0
113	SLU 15	0	328	967	-11.37	-0.15	0
113	SLU 16	0	298	942	-10.09	-0.64	0
113	SLU 17	0	325	965	-11.27	-0.15	0
113	SLU 18	0	304	946	-10.28	-0.64	0
113	SLU 19	0	330	969	-11.45	-0.15	0
113	SLU 20	0	308	947	-10.41	-0.65	0
113	SLU 21	0	335	970	-11.58	-0.16	0
113	SLU 22	0	289	939	-9.8	-0.61	0
113	SLU 23	0	333	978	-11.76	0.21	0
113	SLU 24	0	296	941	-10.03	-0.63	0
113	SLU 25	0	323	965	-11.2	-0.14	0
113	SLU 26	0	338	979	-11.88	0.19	0
113	SLU 27	0	300	942	-10.15	-0.64	0
113	SLU 28	0	327	966	-11.32	-0.15	0
113	SLU 29	0	297	941	-10.05	-0.64	0
113	SLU 30	0	324	964	-11.22	-0.15	0
113	SLU 31	0	365	992	-12.78	0.14	0
113	SLU 32	0	328	955	-11.05	-0.69	0
113	SLU 33	0	354	978	-12.22	-0.21	0
113	SLU 34	0	369	993	-12.9	0.12	0
113	SLU 35	0	332	956	-11.17	-0.71	0
113	SLU 36	0	359	980	-12.34	-0.22	0
113	SLU 37	0	329	955	-11.07	-0.7	0
113	SLU 38	0	356	978	-12.24	-0.22	0
113	SLU 39	0	334	958	-11.26	-0.7	0
113	SLU 40	0	361	982	-12.43	-0.22	0
113	SLU 41	0	338	959	-11.38	-0.72	0
113	SLU 42	0	365	983	-12.56	-0.23	0
113	SLU 43	0	325	1200	-11.14	-0.68	0
113	SLU 44	0	370	1239	-13.09	0.13	0
113	SLU 45	0	332	1202	-11.36	-0.7	0
113	SLU 46	0	359	1225	-12.54	-0.21	0
113	SLU 47	0	374	1240	-13.22	0.12	0
113	SLU 48	0	337	1203	-11.49	-0.71	0
113	SLU 49	0	364	1227	-12.66	-0.23	0
113	SLU 50	0	334	1202	-11.39	-0.71	0
113	SLU 51	0	361	1225	-12.56	-0.22	0
113	SLU 52	0	402	1252	-14.11	0.06	0
113	SLU 53	0	364	1216	-12.38	-0.77	0
113	SLU 54	0	391	1239	-13.55	-0.28	0
113	SLU 55	0	406	1253	-14.24	0.05	0
113	SLU 56	0	368	1217	-12.51	-0.78	0
113	SLU 57	0	395	1240	-13.68	-0.29	0
113	SLU 58	0	365	1215	-12.41	-0.78	0

Nodo	Cont.	Reazione a traslazione			Reazione a rotazione		
Ind.	N.br.	x	y	z	x	y	z
113	SLU 59	0	392	1239	-13.58	-0.29	0
113	SLU 60	0	371	1219	-12.6	-0.78	0
113	SLU 61	0	397	1242	-13.77	-0.29	0
113	SLU 62	0	375	1220	-12.72	-0.79	0
113	SLU 63	0	402	1243	-13.89	-0.3	0
113	SLU 64	0	356	1212	-12.12	-0.75	0
113	SLU 65	0	400	1251	-14.07	0.07	0
113	SLU 66	0	363	1215	-12.34	-0.77	0
113	SLU 67	0	390	1238	-13.51	-0.28	0
113	SLU 68	0	405	1253	-14.19	0.05	0
113	SLU 69	0	367	1216	-12.46	-0.78	0
113	SLU 70	0	394	1239	-13.64	-0.29	0
113	SLU 71	0	364	1214	-12.36	-0.78	0
113	SLU 72	0	391	1238	-13.54	-0.29	0
113	SLU 73	0	432	1265	-15.09	0	0
113	SLU 74	0	395	1228	-13.36	-0.83	0
113	SLU 75	0	421	1252	-14.53	-0.35	0
113	SLU 76	0	436	1266	-15.21	-0.02	0
113	SLU 77	0	399	1229	-13.48	-0.85	0
113	SLU 78	0	426	1253	-14.66	-0.36	0
113	SLU 79	0	396	1228	-13.38	-0.84	0
113	SLU 80	0	423	1252	-14.56	-0.36	0
113	SLU 81	0	401	1232	-13.57	-0.84	0
113	SLU 82	0	428	1255	-14.74	-0.36	0
113	SLU 83	0	405	1233	-13.7	-0.86	0
113	SLU 84	0	432	1256	-14.87	-0.37	0
113	SLE RA 1	0	267	930	-9.11	-0.56	0
113	SLE RA 2	0	297	956	-10.41	-0.02	0
113	SLE RA 3	0	272	931	-9.25	-0.57	0
113	SLE RA 4	0	290	947	-10.04	-0.25	0
113	SLE RA 5	0	300	957	-10.49	-0.03	0
113	SLE RA 6	0	275	932	-9.34	-0.58	0
113	SLE RA 7	0	292	948	-10.12	-0.26	0
113	SLE RA 8	0	273	931	-9.27	-0.58	0
113	SLE RA 9	0	290	947	-10.05	-0.25	0
113	SLE RA 10	0	318	965	-11.09	-0.06	0
113	SLE RA 11	0	293	940	-9.93	-0.62	0
113	SLE RA 12	0	311	956	-10.72	-0.29	0
113	SLE RA 13	0	321	966	-11.17	-0.07	0
113	SLE RA 14	0	296	941	-10.02	-0.63	0
113	SLE RA 15	0	314	957	-10.8	-0.3	0
113	SLE RA 16	0	294	940	-9.95	-0.62	0
113	SLE RA 17	0	312	956	-10.73	-0.3	0
113	SLE RA 18	0	297	943	-10.08	-0.62	0
113	SLE RA 19	0	315	958	-10.86	-0.3	0
113	SLE RA 20	0	300	943	-10.16	-0.63	0
113	SLE RA 21	0	318	959	-10.94	-0.31	0
113	SLE FR 1	0	267	930	-9.11	-0.56	0
113	SLE FR 2	0	273	935	-9.37	-0.45	0
113	SLE FR 3	0	268	930	-9.14	-0.56	0
113	SLE FR 4	0	282	939	-9.66	-0.47	0
113	SLE FR 5	0	277	934	-9.43	-0.58	0
113	SLE FR 6	0	282	936	-9.59	-0.59	0
113	SLE QP 1	0	267	930	-9.11	-0.56	0
113	SLE QP 2	0	276	934	-9.4	-0.58	0
113	SLD 1	22	345	1003	-12.73	38.88	-0.01
113	SLD 2	22	345	1003	-12.73	38.88	-0.01
113	SLD 3	26	1	715	1.95	46.38	-0.01
113	SLD 4	26	1	715	1.95	46.38	-0.01
113	SLD 5	0	819	1392	-32.68	-0.11	0
113	SLD 6	0	819	1392	-32.68	-0.11	0
113	SLD 7	14	-329	430	16.29	24.87	0
113	SLD 8	14	-329	430	16.29	24.87	0
113	SLD 9	-15	881	1437	-35.08	-26.03	0
113	SLD 10	-15	881	1437	-35.08	-26.03	0
113	SLD 11	0	-267	475	13.88	-1.05	0
113	SLD 12	0	-267	475	13.88	-1.05	0
113	SLD 13	-27	551	1152	-20.75	-47.53	0
113	SLD 14	-27	551	1152	-20.75	-47.53	0
113	SLD 15	-22	207	864	-6.06	-40.04	0.01
113	SLD 16	-22	207	864	-6.06	-40.04	0.01
113	SLV 1	55	435	1095	-17.1	96.97	-0.01
113	SLV 2	55	435	1095	-17.1	96.97	-0.01
113	SLV 3	66	-369	421	17.19	115.83	-0.01
113	SLV 4	66	-369	421	17.19	115.83	-0.01
113	SLV 5	0	1543	2004	-63.71	0.09	-0.01
113	SLV 6	0	1543	2004	-63.71	0.09	-0.01
113	SLV 7	36	-1137	-242	50.58	62.94	0
113	SLV 8	36	-1137	-242	50.58	62.94	0
113	SLV 9	-36	1689	2109	-69.38	-64.1	0
113	SLV 10	-36	1689	2109	-69.38	-64.1	0
113	SLV 11	0	-991	-137	44.92	-1.24	0.01
113	SLV 12	0	-991	-137	44.92	-1.24	0.01
113	SLV 13	-66	921	1446	-35.98	-116.99	0.01
113	SLV 14	-66	921	1446	-35.98	-116.99	0.01
113	SLV 15	-55	117	772	-1.7	-98.13	0.01
113	SLV 16	-55	117	772	-1.7	-98.13	0.01
114	SLU 1	6	-127	4529	2.39	4.31	-0.01
114	SLU 2	6	-135	4511	2.72	4.24	-0.01
114	SLU 3	6	-124	4656	2.23	4.47	-0.01
114	SLU 4	6	-129	4646	2.43	4.42	-0.01

Nodo	Cont.	Reazione a traslazione			Reazione a rotazione		
Ind.	N.br.	x	y	z	x	y	z
114	SLU 5	6	-133	4602	2.6	4.35	-0.01
114	SLU 6	7	-122	4747	2.1	4.58	-0.01
114	SLU 7	7	-127	4737	2.3	4.54	-0.01
114	SLU 8	7	-123	4710	2.13	4.54	-0.01
114	SLU 9	7	-128	4700	2.33	4.5	-0.01
114	SLU 10	7	-158	5181	3.39	4.89	-0.01
114	SLU 11	7	-147	5326	2.9	5.12	-0.01
114	SLU 12	7	-152	5315	3.1	5.07	-0.01
114	SLU 13	7	-156	5272	3.27	5	-0.01
114	SLU 14	8	-145	5417	2.77	5.23	-0.01
114	SLU 15	8	-150	5406	2.97	5.19	-0.01
114	SLU 16	8	-146	5380	2.81	5.19	-0.01
114	SLU 17	7	-151	5370	3.01	5.15	-0.01
114	SLU 18	8	-160	5485	3.35	5.24	-0.01
114	SLU 19	8	-165	5475	3.55	5.19	-0.01
114	SLU 20	8	-158	5576	3.22	5.35	-0.01
114	SLU 21	8	-163	5566	3.42	5.31	-0.01
114	SLU 22	7	-137	5078	2.59	4.84	-0.01
114	SLU 23	7	-145	5061	2.93	4.77	-0.01
114	SLU 24	7	-134	5206	2.43	5	-0.01
114	SLU 25	7	-139	5195	2.63	4.95	-0.01
114	SLU 26	7	-143	5152	2.8	4.88	-0.01
114	SLU 27	7	-132	5297	2.3	5.11	-0.01
114	SLU 28	7	-137	5286	2.5	5.07	-0.01
114	SLU 29	7	-133	5260	2.34	5.07	-0.01
114	SLU 30	7	-138	5250	2.54	5.03	-0.01
114	SLU 31	8	-168	5730	3.6	5.42	-0.01
114	SLU 32	8	-157	5875	3.1	5.65	-0.01
114	SLU 33	8	-162	5865	3.3	5.6	-0.01
114	SLU 34	8	-166	5821	3.47	5.53	-0.01
114	SLU 35	8	-155	5966	2.97	5.76	-0.01
114	SLU 36	8	-160	5956	3.17	5.72	-0.01
114	SLU 37	8	-156	5929	3.01	5.72	-0.01
114	SLU 38	8	-161	5919	3.21	5.68	-0.01
114	SLU 39	8	-170	6034	3.55	5.77	-0.01
114	SLU 40	8	-175	6024	3.75	5.72	-0.01
114	SLU 41	9	-168	6125	3.42	5.88	-0.01
114	SLU 42	8	-173	6115	3.62	5.84	-0.01
114	SLU 43	8	-162	5699	3.04	5.42	-0.01
114	SLU 44	8	-170	5681	3.37	5.35	-0.01
114	SLU 45	8	-159	5826	2.88	5.58	-0.01
114	SLU 46	8	-164	5816	3.08	5.53	-0.01
114	SLU 47	8	-168	5772	3.24	5.46	-0.01
114	SLU 48	8	-157	5917	2.75	5.69	-0.01
114	SLU 49	8	-162	5907	2.95	5.65	-0.01
114	SLU 50	8	-158	5881	2.78	5.65	-0.01
114	SLU 51	8	-163	5870	2.98	5.61	-0.01
114	SLU 52	9	-193	6351	4.04	6	-0.01
114	SLU 53	9	-182	6496	3.55	6.23	-0.01
114	SLU 54	9	-187	6485	3.75	6.18	-0.01
114	SLU 55	9	-191	6442	3.91	6.11	-0.01
114	SLU 56	9	-180	6587	3.42	6.34	-0.01
114	SLU 57	9	-185	6576	3.62	6.3	-0.01
114	SLU 58	9	-181	6550	3.45	6.3	-0.01
114	SLU 59	9	-185	6540	3.65	6.26	-0.01
114	SLU 60	9	-195	6655	4	6.35	-0.01
114	SLU 61	9	-200	6645	4.2	6.3	-0.01
114	SLU 62	9	-193	6746	3.87	6.46	-0.01
114	SLU 63	9	-197	6736	4.07	6.42	-0.01
114	SLU 64	9	-172	6248	3.24	5.95	-0.01
114	SLU 65	9	-180	6231	3.57	5.88	-0.01
114	SLU 66	9	-169	6376	3.08	6.11	-0.01
114	SLU 67	9	-174	6366	3.28	6.06	-0.01
114	SLU 68	9	-178	6322	3.45	5.99	-0.01
114	SLU 69	9	-167	6467	2.95	6.22	-0.01
114	SLU 70	9	-172	6456	3.15	6.18	-0.01
114	SLU 71	9	-168	6430	2.99	6.18	-0.01
114	SLU 72	9	-172	6420	3.19	6.14	-0.01
114	SLU 73	9	-203	6900	4.25	6.53	-0.01
114	SLU 74	10	-192	7045	3.75	6.76	-0.01
114	SLU 75	10	-197	7035	3.95	6.71	-0.01
114	SLU 76	10	-201	6991	4.12	6.64	-0.01
114	SLU 77	10	-190	7136	3.62	6.87	-0.01
114	SLU 78	10	-195	7126	3.82	6.83	-0.01
114	SLU 79	10	-191	7100	3.66	6.83	-0.01
114	SLU 80	10	-195	7089	3.86	6.79	-0.01
114	SLU 81	10	-205	7205	4.2	6.88	-0.01
114	SLU 82	10	-209	7194	4.4	6.83	-0.01
114	SLU 83	10	-202	7296	4.07	6.99	-0.01
114	SLU 84	10	-207	7285	4.27	6.95	-0.01
114	SLE RA 1	6	-130	4686	2.45	4.46	-0.01
114	SLE RA 2	6	-135	4674	2.67	4.41	-0.01
114	SLE RA 3	7	-128	4771	2.34	4.56	-0.01
114	SLE RA 4	7	-131	4764	2.47	4.54	-0.01
114	SLE RA 5	7	-134	4735	2.59	4.49	-0.01
114	SLE RA 6	7	-127	4831	2.26	4.64	-0.01
114	SLE RA 7	7	-130	4824	2.39	4.61	-0.01
114	SLE RA 8	7	-127	4807	2.28	4.61	-0.01
114	SLE RA 9	7	-130	4800	2.41	4.59	-0.01
114	SLE RA 10	7	-151	5120	3.12	4.84	-0.01
114	SLE RA 11	7	-143	5217	2.79	5	-0.01

Nodo	Cont.	Reazione a traslazione			Reazione a rotazione		
Ind.	N.br.	x	y	z	x	y	z
114	SLE RA 12	7	-147	5210	2.92	4.97	-0.01
114	SLE RA 13	7	-149	5181	3.03	4.92	-0.01
114	SLE RA 14	7	-142	5278	2.7	5.08	-0.01
114	SLE RA 15	7	-145	5271	2.84	5.05	-0.01
114	SLE RA 16	7	-142	5253	2.73	5.05	-0.01
114	SLE RA 17	7	-146	5246	2.86	5.02	-0.01
114	SLE RA 18	7	-152	5323	3.09	5.08	-0.01
114	SLE RA 19	7	-155	5316	3.22	5.05	-0.01
114	SLE RA 20	7	-150	5384	3	5.16	-0.01
114	SLE RA 21	7	-154	5377	3.14	5.13	-0.01
114	SLE FR 1	6	-130	4686	2.45	4.46	-0.01
114	SLE FR 2	6	-131	4683	2.49	4.45	-0.01
114	SLE FR 3	7	-129	4710	2.41	4.49	-0.01
114	SLE FR 4	7	-138	4875	2.68	4.64	-0.01
114	SLE FR 5	7	-136	4901	2.61	4.68	-0.01
114	SLE FR 6	7	-141	5004	2.77	4.77	-0.01
114	SLE QP 1	6	-130	4686	2.45	4.46	-0.01
114	SLE QP 2	7	-137	4877	2.64	4.65	-0.01
114	SLD 1	14	-58	4549	-0.88	11.86	-0.02
114	SLD 2	14	-58	4549	-0.88	11.86	-0.02
114	SLD 3	12	-536	4403	22.14	10.52	-0.02
114	SLD 4	12	-536	4403	22.14	10.52	-0.02
114	SLD 5	12	613	5000	-33.33	8.85	-0.01
114	SLD 6	12	613	5000	-33.33	8.85	-0.01
114	SLD 7	6	-982	4513	43.4	4.37	-0.01
114	SLD 8	6	-982	4513	43.4	4.37	-0.01
114	SLD 9	8	709	5240	-38.12	4.92	-0.01
114	SLD 10	8	709	5240	-38.12	4.92	-0.01
114	SLD 11	2	-886	4754	38.61	0.44	0
114	SLD 12	2	-886	4754	38.61	0.44	0
114	SLD 13	1	263	5350	-16.86	-1.23	0
114	SLD 14	1	263	5350	-16.86	-1.23	0
114	SLD 15	0	-215	5204	6.16	-2.57	0
114	SLD 16	0	-215	5204	6.16	-2.57	0
114	SLV 1	24	51	4126	-5.74	21.89	-0.03
114	SLV 2	24	51	4126	-5.74	21.89	-0.03
114	SLV 3	19	-1065	3784	47.98	18.73	-0.03
114	SLV 4	19	-1065	3784	47.98	18.73	-0.03
114	SLV 5	18	1613	5171	-81.35	14.61	-0.02
114	SLV 6	18	1613	5171	-81.35	14.61	-0.02
114	SLV 7	4	-2108	4030	97.72	4.08	-0.01
114	SLV 8	4	-2108	4030	97.72	4.08	-0.01
114	SLV 9	9	1835	5724	-92.44	5.21	-0.01
114	SLV 10	9	1835	5724	-92.44	5.21	-0.01
114	SLV 11	-5	-1886	4583	86.63	-5.32	0.01
114	SLV 12	-5	-1886	4583	86.63	-5.32	0.01
114	SLV 13	-6	792	5970	-42.7	-9.44	0.01
114	SLV 14	-6	792	5970	-42.7	-9.44	0.01
114	SLV 15	-10	-324	5628	11.02	-12.6	0.02
114	SLV 16	-10	-324	5628	11.02	-12.6	0.02
115	SLU 1	3	-156	4265	7.3	2.82	0.01
115	SLU 2	4	-155	4238	7.2	3.01	0.01
115	SLU 3	3	-157	4377	7.35	2.91	0.01
115	SLU 4	4	-156	4360	7.29	3.02	0.01
115	SLU 5	4	-156	4314	7.27	3.07	0.01
115	SLU 6	4	-158	4454	7.42	2.97	0.01
115	SLU 7	4	-157	4437	7.36	3.08	0.01
115	SLU 8	3	-159	4419	7.44	2.94	0.01
115	SLU 9	4	-158	4402	7.38	3.05	0.01
115	SLU 10	4	-172	4843	8.09	3.21	0.01
115	SLU 11	3	-175	4983	8.24	3.12	0.01
115	SLU 12	4	-174	4966	8.18	3.23	0.01
115	SLU 13	4	-174	4920	8.16	3.27	0.01
115	SLU 14	4	-176	5059	8.31	3.18	0.01
115	SLU 15	4	-175	5043	8.25	3.29	0.01
115	SLU 16	4	-176	5024	8.32	3.15	0.01
115	SLU 17	4	-176	5007	8.26	3.26	0.01
115	SLU 18	3	-181	5130	8.56	3.12	0.01
115	SLU 19	4	-181	5114	8.51	3.23	0.01
115	SLU 20	3	-183	5207	8.63	3.18	0.01
115	SLU 21	4	-182	5190	8.58	3.29	0.01
115	SLU 22	4	-169	4768	7.96	3.19	0.01
115	SLU 23	4	-167	4740	7.86	3.38	0.01
115	SLU 24	4	-169	4879	8.02	3.28	0.01
115	SLU 25	4	-168	4863	7.96	3.39	0.01
115	SLU 26	4	-168	4816	7.93	3.44	0.01
115	SLU 27	4	-171	4956	8.09	3.34	0.01
115	SLU 28	4	-170	4939	8.03	3.45	0.01
115	SLU 29	4	-171	4921	8.1	3.31	0.01
115	SLU 30	4	-170	4904	8.04	3.42	0.01
115	SLU 31	4	-185	5345	8.75	3.59	0.01
115	SLU 32	4	-187	5485	8.9	3.49	0.01
115	SLU 33	4	-186	5468	8.84	3.6	0.01
115	SLU 34	4	-186	5422	8.82	3.65	0.01
115	SLU 35	4	-188	5561	8.97	3.55	0.01
115	SLU 36	4	-187	5545	8.91	3.66	0.01
115	SLU 37	4	-189	5526	8.99	3.52	0.01
115	SLU 38	4	-188	5510	8.93	3.63	0.01
115	SLU 39	4	-194	5633	9.23	3.49	0.01
115	SLU 40	4	-193	5616	9.17	3.6	0.01
115	SLU 41	4	-195	5709	9.3	3.55	0.01

Nodo	Cont.	Reazione a traslazione			Reazione a rotazione		
Ind.	N.br.	x	y	z	x	y	z
115	SLU 42	4	-194	5692	9.24	3.66	0.01
115	SLU 43	4	-199	5373	9.26	3.54	0.01
115	SLU 44	4	-198	5345	9.16	3.73	0.01
115	SLU 45	4	-200	5485	9.31	3.63	0.01
115	SLU 46	4	-199	5468	9.26	3.74	0.01
115	SLU 47	5	-199	5422	9.23	3.79	0.01
115	SLU 48	4	-201	5561	9.38	3.69	0.01
115	SLU 49	5	-200	5544	9.33	3.8	0.01
115	SLU 50	4	-202	5526	9.4	3.66	0.01
115	SLU 51	4	-201	5509	9.34	3.77	0.01
115	SLU 52	5	-215	5950	10.05	3.93	0.01
115	SLU 53	4	-217	6090	10.2	3.84	0.01
115	SLU 54	5	-216	6073	10.14	3.95	0.01
115	SLU 55	5	-216	6027	10.12	3.99	0.01
115	SLU 56	4	-219	6167	10.27	3.9	0.01
115	SLU 57	5	-218	6150	10.21	4.01	0.01
115	SLU 58	4	-219	6131	10.29	3.87	0.01
115	SLU 59	5	-218	6115	10.23	3.98	0.01
115	SLU 60	4	-224	6238	10.53	3.84	0.01
115	SLU 61	4	-223	6221	10.47	3.95	0.01
115	SLU 62	4	-225	6314	10.6	3.9	0.01
115	SLU 63	5	-225	6298	10.54	4.01	0.01
115	SLU 64	5	-211	5875	9.92	3.91	0.01
115	SLU 65	5	-210	5847	9.82	4.1	0.01
115	SLU 66	5	-212	5987	9.98	4	0.01
115	SLU 67	5	-211	5970	9.92	4.11	0.01
115	SLU 68	5	-211	5924	9.89	4.16	0.01
115	SLU 69	5	-213	6063	10.05	4.06	0.01
115	SLU 70	5	-212	6047	9.99	4.17	0.01
115	SLU 71	5	-214	6028	10.06	4.03	0.01
115	SLU 72	5	-213	6011	10	4.14	0.01
115	SLU 73	5	-227	6453	10.71	4.31	0.01
115	SLU 74	5	-230	6592	10.87	4.21	0.01
115	SLU 75	5	-229	6576	10.81	4.32	0.01
115	SLU 76	5	-229	6529	10.78	4.36	0.01
115	SLU 77	5	-231	6669	10.93	4.27	0.01
115	SLU 78	5	-230	6652	10.88	4.38	0.01
115	SLU 79	5	-231	6634	10.95	4.24	0.01
115	SLU 80	5	-230	6617	10.89	4.35	0.01
115	SLU 81	5	-236	6740	11.19	4.21	0.01
115	SLU 82	5	-235	6723	11.13	4.32	0.01
115	SLU 83	5	-238	6817	11.26	4.27	0.01
115	SLU 84	5	-237	6800	11.2	4.38	0.01
115	SLE RA 1	3	-160	4409	7.49	2.93	0.01
115	SLE RA 2	4	-159	4390	7.42	3.05	0.01
115	SLE RA 3	4	-160	4483	7.52	2.99	0.01
115	SLE RA 4	4	-160	4472	7.48	3.06	0.01
115	SLE RA 5	4	-160	4441	7.47	3.09	0.01
115	SLE RA 6	4	-161	4534	7.57	3.03	0.01
115	SLE RA 7	4	-161	4523	7.53	3.1	0.01
115	SLE RA 8	4	-162	4511	7.58	3.01	0.01
115	SLE RA 9	4	-161	4500	7.54	3.08	0.01
115	SLE RA 10	4	-171	4794	8.01	3.19	0.01
115	SLE RA 11	4	-172	4887	8.12	3.12	0.01
115	SLE RA 12	4	-171	4876	8.08	3.2	0.01
115	SLE RA 13	4	-171	4845	8.06	3.23	0.01
115	SLE RA 14	4	-173	4938	8.16	3.16	0.01
115	SLE RA 15	4	-172	4927	8.12	3.24	0.01
115	SLE RA 16	4	-173	4915	8.17	3.15	0.01
115	SLE RA 17	4	-173	4903	8.13	3.22	0.01
115	SLE RA 18	3	-177	4985	8.33	3.13	0.01
115	SLE RA 19	4	-176	4974	8.29	3.2	0.01
115	SLE RA 20	4	-177	5037	8.38	3.17	0.01
115	SLE RA 21	4	-177	5025	8.34	3.24	0.01
115	SLE FR 1	3	-160	4409	7.49	2.93	0.01
115	SLE FR 2	3	-160	4405	7.47	2.95	0.01
115	SLE FR 3	3	-160	4429	7.51	2.94	0.01
115	SLE FR 4	3	-165	4578	7.73	3.01	0.01
115	SLE FR 5	3	-165	4602	7.76	3	0.01
115	SLE FR 6	3	-168	4697	7.91	3.03	0.01
115	SLE QP 1	3	-160	4409	7.49	2.93	0.01
115	SLE QP 2	3	-165	4582	7.74	2.99	0.01
115	SLD 1	15	260	5096	-12.5	12.32	0.03
115	SLD 2	15	260	5096	-12.5	12.32	0.03
115	SLD 3	18	-207	4970	9.73	14.16	0.04
115	SLD 4	18	-207	4970	9.73	14.16	0.04
115	SLD 5	3	670	4928	-32.04	3.01	0
115	SLD 6	3	670	4928	-32.04	3.01	0
115	SLD 7	11	-885	4506	42.04	9.12	0.03
115	SLD 8	11	-885	4506	42.04	9.12	0.03
115	SLD 9	-4	555	4657	-26.56	-3.15	-0.01
115	SLD 10	-4	555	4657	-26.56	-3.15	-0.01
115	SLD 11	3	-1000	4235	47.52	2.97	0.02
115	SLD 12	3	-1000	4235	47.52	2.97	0.02
115	SLD 13	-11	-123	4194	5.75	-8.18	-0.02
115	SLD 14	-11	-123	4194	5.75	-8.18	-0.02
115	SLD 15	-8	-589	4067	27.98	-6.35	-0.01
115	SLD 16	-8	-589	4067	27.98	-6.35	-0.01
115	SLV 1	31	820	5766	-39.24	25.13	0.06
115	SLV 2	31	820	5766	-39.24	25.13	0.06
115	SLV 3	37	-268	5469	12.61	29.66	0.08

Nodo	Cont.	Reazione a traslazione			Reazione a rotazione		
Ind.	N.br.	x	y	z	x	y	z
115	SLV 4	37	-268	5469	12.61	29.66	0.08
115	SLV 5	3	1781	5388	-84.99	2.75	-0.01
115	SLV 6	3	1781	5388	-84.99	2.75	-0.01
115	SLV 7	22	-1846	4397	87.84	17.87	0.06
115	SLV 8	22	-1846	4397	87.84	17.87	0.06
115	SLV 9	-15	1517	4766	-72.36	-11.9	-0.04
115	SLV 10	-15	1517	4766	-72.36	-11.9	-0.04
115	SLV 11	4	-2111	3776	100.47	3.23	0.03
115	SLV 12	4	-2111	3776	100.47	3.23	0.03
115	SLV 13	-30	-62	3695	2.87	-23.69	-0.06
115	SLV 14	-30	-62	3695	2.87	-23.69	-0.06
115	SLV 15	-24	-1150	3398	54.72	-19.15	-0.04
115	SLV 16	-24	-1150	3398	54.72	-19.15	-0.04
116	SLU 1	0	117	4146	-14.59	-0.58	0
116	SLU 2	0	367	4312	-26.04	0.03	0
116	SLU 3	-1	123	4259	-15.1	-0.59	0
116	SLU 4	0	273	4358	-21.97	-0.23	0
116	SLU 5	0	372	4384	-26.41	0.02	0
116	SLU 6	-1	128	4331	-15.48	-0.6	0
116	SLU 7	0	278	4430	-22.35	-0.24	0
116	SLU 8	-1	127	4291	-15.34	-0.6	0
116	SLU 9	0	277	4390	-22.21	-0.23	0
116	SLU 10	0	381	4860	-27.87	-0.05	0
116	SLU 11	-1	138	4807	-16.93	-0.68	0
116	SLU 12	0	287	4906	-23.8	-0.31	0
116	SLU 13	0	386	4932	-28.24	-0.06	0
116	SLU 14	-1	143	4879	-17.31	-0.69	0
116	SLU 15	0	292	4978	-24.18	-0.32	0
116	SLU 16	-1	142	4839	-17.18	-0.68	0
116	SLU 17	0	291	4938	-24.04	-0.31	0
116	SLU 18	-1	138	4930	-17.2	-0.7	0
116	SLU 19	0	288	5029	-24.07	-0.33	0
116	SLU 20	-1	143	5002	-17.58	-0.71	0
116	SLU 21	0	293	5101	-24.45	-0.34	0
116	SLU 22	-1	134	4664	-16.43	-0.66	0
116	SLU 23	0	383	4829	-27.88	-0.05	0
116	SLU 24	-1	140	4776	-16.94	-0.67	0
116	SLU 25	0	290	4875	-23.81	-0.31	0
116	SLU 26	0	388	4901	-28.26	-0.06	0
116	SLU 27	-1	145	4848	-17.32	-0.68	0
116	SLU 28	0	295	4947	-24.19	-0.32	0
116	SLU 29	-1	144	4809	-17.19	-0.68	0
116	SLU 30	0	294	4908	-24.06	-0.31	0
116	SLU 31	0	398	5377	-29.71	-0.13	0
116	SLU 32	-1	154	5324	-18.78	-0.76	0
116	SLU 33	0	304	5423	-25.64	-0.39	0
116	SLU 34	0	403	5450	-30.09	-0.14	0
116	SLU 35	-1	159	5396	-19.15	-0.77	0
116	SLU 36	0	309	5496	-26.02	-0.4	0
116	SLU 37	-1	158	5357	-19.02	-0.76	0
116	SLU 38	0	308	5456	-25.89	-0.39	0
116	SLU 39	-1	155	5447	-19.05	-0.78	0
116	SLU 40	0	304	5546	-25.92	-0.41	0
116	SLU 41	-1	160	5519	-19.43	-0.79	0
116	SLU 42	0	309	5618	-26.3	-0.42	0
116	SLU 43	-1	146	5213	-18.33	-0.72	0
116	SLU 44	0	396	5378	-29.78	-0.11	0
116	SLU 45	-1	152	5325	-18.84	-0.74	0
116	SLU 46	0	302	5424	-25.71	-0.37	0
116	SLU 47	0	401	5451	-30.16	-0.12	0
116	SLU 48	-1	157	5397	-19.22	-0.75	0
116	SLU 49	0	307	5497	-26.09	-0.38	0
116	SLU 50	-1	156	5358	-19.09	-0.74	0
116	SLU 51	0	306	5457	-25.96	-0.38	0
116	SLU 52	0	411	5926	-31.61	-0.2	0
116	SLU 53	-1	167	5873	-20.67	-0.82	0
116	SLU 54	0	317	5972	-27.54	-0.46	0
116	SLU 55	0	416	5999	-31.99	-0.21	0
116	SLU 56	-1	172	5946	-21.05	-0.83	0
116	SLU 57	0	322	6045	-27.92	-0.47	0
116	SLU 58	-1	171	5906	-20.92	-0.83	0
116	SLU 59	0	321	6005	-27.79	-0.46	0
116	SLU 60	-1	167	5996	-20.95	-0.84	0
116	SLU 61	0	317	6095	-27.82	-0.48	0
116	SLU 62	-1	172	6068	-21.33	-0.85	0
116	SLU 63	0	322	6167	-28.19	-0.49	0
116	SLU 64	-1	163	5730	-20.18	-0.8	0
116	SLU 65	0	413	5896	-31.62	-0.19	0
116	SLU 66	-1	169	5843	-20.69	-0.82	0
116	SLU 67	0	319	5942	-27.56	-0.45	0
116	SLU 68	0	418	5968	-32	-0.2	0
116	SLU 69	-1	174	5915	-21.07	-0.83	0
116	SLU 70	0	324	6014	-27.93	-0.46	0
116	SLU 71	-1	173	5875	-20.93	-0.82	0
116	SLU 72	0	323	5974	-27.8	-0.46	0
116	SLU 73	0	427	6444	-33.46	-0.28	0
116	SLU 74	-1	184	6391	-22.52	-0.9	0
116	SLU 75	0	333	6490	-29.39	-0.54	0
116	SLU 76	0	432	6516	-33.83	-0.29	0
116	SLU 77	-1	189	6463	-22.9	-0.91	0
116	SLU 78	0	339	6562	-29.77	-0.55	0

Nodo	Cont.	Reazione a traslazione			Reazione a rotazione		
Ind.	N.br.	x	y	z	x	y	z
116	SLU 79	-1	188	6423	-22.77	-0.91	0
116	SLU 80	0	337	6522	-29.63	-0.54	0
116	SLU 81	-1	184	6514	-22.79	-0.92	0
116	SLU 82	0	334	6613	-29.66	-0.56	0
116	SLU 83	-1	189	6586	-23.17	-0.93	0
116	SLU 84	0	339	6685	-30.04	-0.57	0
116	SLE RA 1	-1	122	4294	-15.12	-0.6	0
116	SLE RA 2	0	288	4404	-22.75	-0.19	0
116	SLE RA 3	-1	126	4369	-15.46	-0.61	0
116	SLE RA 4	0	226	4435	-20.03	-0.37	0
116	SLE RA 5	0	291	4453	-23	-0.2	0
116	SLE RA 6	-1	129	4417	-15.71	-0.62	0
116	SLE RA 7	0	229	4483	-20.29	-0.37	0
116	SLE RA 8	-1	128	4391	-15.62	-0.61	0
116	SLE RA 9	0	228	4457	-20.2	-0.37	0
116	SLE RA 10	0	298	4770	-23.97	-0.25	0
116	SLE RA 11	-1	135	4734	-16.68	-0.67	0
116	SLE RA 12	0	235	4801	-21.26	-0.42	0
116	SLE RA 13	0	301	4818	-24.22	-0.26	0
116	SLE RA 14	-1	139	4783	-16.93	-0.67	0
116	SLE RA 15	0	239	4849	-21.51	-0.43	0
116	SLE RA 16	-1	138	4756	-16.84	-0.67	0
116	SLE RA 17	0	238	4822	-21.42	-0.42	0
116	SLE RA 18	-1	136	4816	-16.86	-0.68	0
116	SLE RA 19	0	235	4882	-21.44	-0.44	0
116	SLE RA 20	-1	139	4865	-17.11	-0.69	0
116	SLE RA 21	0	239	4931	-21.69	-0.44	0
116	SLE FR 1	-1	122	4294	-15.12	-0.6	0
116	SLE FR 2	0	155	4316	-16.64	-0.52	0
116	SLE FR 3	-1	123	4314	-15.22	-0.6	0
116	SLE FR 4	0	159	4473	-17.17	-0.54	0
116	SLE FR 5	-1	127	4470	-15.74	-0.63	0
116	SLE FR 6	-1	129	4555	-15.99	-0.64	0
116	SLE QP 1	-1	122	4294	-15.12	-0.6	0
116	SLE QP 2	-1	126	4451	-15.64	-0.62	0
116	SLD 1	9	120	4512	-15.8	7.98	0
116	SLD 2	9	120	4512	-15.8	7.98	0
116	SLD 3	6	-264	4007	2.69	5.07	0
116	SLD 4	6	-264	4007	2.69	5.07	0
116	SLD 5	7	706	5236	-43.73	6.36	0
116	SLD 6	7	706	5236	-43.73	6.36	0
116	SLD 7	-3	-573	3551	17.91	-3.32	0
116	SLD 8	-3	-573	3551	17.91	-3.32	0
116	SLD 9	2	825	5351	-49.19	2.08	0
116	SLD 10	2	825	5351	-49.19	2.08	0
116	SLD 11	-8	-454	3665	12.46	-7.61	0
116	SLD 12	-8	-454	3665	12.46	-7.61	0
116	SLD 13	-7	515	4895	-33.97	-6.32	0
116	SLD 14	-7	515	4895	-33.97	-6.32	0
116	SLD 15	-10	132	4390	-15.48	-9.22	0
116	SLD 16	-10	132	4390	-15.48	-9.22	0
116	SLV 1	23	103	4580	-15.45	20.75	0.01
116	SLV 2	23	103	4580	-15.45	20.75	0.01
116	SLV 3	15	-798	3395	27.93	13.37	0.01
116	SLV 4	15	-798	3395	27.93	13.37	0.01
116	SLV 5	18	1485	6287	-81.37	16.98	0.01
116	SLV 6	18	1485	6287	-81.37	16.98	0.01
116	SLV 7	-7	-1517	2337	63.22	-7.62	0
116	SLV 8	-7	-1517	2337	63.22	-7.62	0
116	SLV 9	6	1769	6564	-94.49	6.37	0
116	SLV 10	6	1769	6564	-94.49	6.37	0
116	SLV 11	-19	-1233	2615	50.09	-18.23	-0.01
116	SLV 12	-19	-1233	2615	50.09	-18.23	-0.01
116	SLV 13	-16	1049	5506	-59.2	-14.62	-0.01
116	SLV 14	-16	1049	5506	-59.2	-14.62	-0.01
116	SLV 15	-24	149	4322	-15.83	-22	-0.01
116	SLV 16	-24	149	4322	-15.83	-22	-0.01
117	SLU 1	4	-54	595	1.48	2.49	0.01
117	SLU 2	4	-53	595	1.45	2.67	0.01
117	SLU 3	4	-57	594	1.55	2.55	0.01
117	SLU 4	4	-56	595	1.53	2.66	0.01
117	SLU 5	5	-55	595	1.5	2.71	0.01
117	SLU 6	4	-58	594	1.6	2.59	0.01
117	SLU 7	5	-58	594	1.58	2.7	0.01
117	SLU 8	4	-57	594	1.58	2.57	0.01
117	SLU 9	4	-57	595	1.56	2.68	0.01
117	SLU 10	6	-63	717	1.7	3.18	0.01
117	SLU 11	5	-66	716	1.81	3.06	0.01
117	SLU 12	6	-66	716	1.79	3.17	0.01
117	SLU 13	6	-64	716	1.75	3.22	0.01
117	SLU 14	5	-68	715	1.86	3.1	0.01
117	SLU 15	6	-68	716	1.84	3.21	0.01
117	SLU 16	5	-67	716	1.83	3.08	0.01
117	SLU 17	6	-67	716	1.82	3.19	0.01
117	SLU 18	6	-68	768	1.84	3.22	0.01
117	SLU 19	6	-67	768	1.83	3.33	0.01
117	SLU 20	6	-70	768	1.89	3.26	0.01
117	SLU 21	6	-69	768	1.88	3.37	0.01
117	SLU 22	5	-65	625	1.78	2.85	0.01
117	SLU 23	5	-64	626	1.75	3.03	0.01
117	SLU 24	5	-68	625	1.86	2.91	0.01

Nodo	Cont.	Reazione a traslazione			Reazione a rotazione		
Ind.	N.br.	x	y	z	x	y	z
117	SLU 25	5	-67	625	1.84	3.02	0.01
117	SLU 26	5	-66	625	1.8	3.07	0.01
117	SLU 27	5	-70	624	1.9	2.95	0.01
117	SLU 28	5	-69	625	1.89	3.06	0.01
117	SLU 29	5	-69	625	1.88	2.93	0.01
117	SLU 30	5	-68	625	1.86	3.04	0.01
117	SLU 31	6	-74	747	2.01	3.54	0.02
117	SLU 32	6	-78	746	2.11	3.42	0.01
117	SLU 33	6	-77	746	2.09	3.53	0.02
117	SLU 34	6	-76	747	2.06	3.58	0.02
117	SLU 35	6	-79	746	2.16	3.47	0.01
117	SLU 36	6	-79	746	2.14	3.57	0.02
117	SLU 37	6	-79	746	2.14	3.45	0.01
117	SLU 38	6	-78	746	2.12	3.55	0.02
117	SLU 39	6	-79	799	2.15	3.58	0.02
117	SLU 40	7	-79	799	2.13	3.69	0.02
117	SLU 41	6	-81	798	2.2	3.62	0.02
117	SLU 42	7	-80	798	2.18	3.73	0.02
117	SLU 43	5	-66	763	1.82	3.11	0.01
117	SLU 44	6	-65	764	1.79	3.29	0.01
117	SLU 45	5	-69	763	1.89	3.17	0.01
117	SLU 46	5	-68	763	1.87	3.28	0.01
117	SLU 47	6	-67	763	1.84	3.33	0.01
117	SLU 48	5	-71	762	1.94	3.21	0.01
117	SLU 49	6	-70	762	1.92	3.32	0.01
117	SLU 50	5	-70	762	1.92	3.19	0.01
117	SLU 51	6	-69	763	1.9	3.3	0.01
117	SLU 52	7	-75	885	2.04	3.8	0.02
117	SLU 53	6	-79	884	2.15	3.68	0.02
117	SLU 54	7	-78	884	2.13	3.79	0.02
117	SLU 55	7	-77	884	2.09	3.84	0.02
117	SLU 56	6	-80	883	2.2	3.73	0.02
117	SLU 57	7	-80	884	2.18	3.83	0.02
117	SLU 58	6	-80	884	2.17	3.71	0.02
117	SLU 59	7	-79	884	2.15	3.81	0.02
117	SLU 60	7	-80	936	2.18	3.84	0.02
117	SLU 61	7	-79	937	2.16	3.95	0.02
117	SLU 62	7	-82	936	2.23	3.88	0.02
117	SLU 63	7	-81	936	2.21	3.99	0.02
117	SLU 64	6	-77	794	2.12	3.47	0.01
117	SLU 65	6	-76	794	2.09	3.65	0.02
117	SLU 66	6	-80	793	2.19	3.53	0.01
117	SLU 67	6	-79	793	2.18	3.64	0.01
117	SLU 68	6	-78	794	2.14	3.69	0.02
117	SLU 69	6	-82	793	2.24	3.58	0.01
117	SLU 70	6	-81	793	2.23	3.68	0.02
117	SLU 71	6	-81	793	2.22	3.56	0.01
117	SLU 72	6	-80	793	2.2	3.66	0.02
117	SLU 73	7	-86	915	2.35	4.16	0.02
117	SLU 74	7	-90	914	2.45	4.04	0.02
117	SLU 75	7	-89	914	2.43	4.15	0.02
117	SLU 76	7	-88	915	2.4	4.2	0.02
117	SLU 77	7	-92	914	2.5	4.09	0.02
117	SLU 78	7	-91	914	2.48	4.2	0.02
117	SLU 79	7	-91	914	2.47	4.07	0.02
117	SLU 80	7	-90	914	2.46	4.18	0.02
117	SLU 81	7	-91	967	2.49	4.2	0.02
117	SLU 82	8	-91	967	2.47	4.31	0.02
117	SLU 83	7	-93	966	2.53	4.24	0.02
117	SLU 84	8	-93	967	2.52	4.35	0.02
117	SLE RA 1	4	-57	604	1.56	2.59	0.01
117	SLE RA 2	5	-56	604	1.54	2.71	0.01
117	SLE RA 3	4	-59	603	1.61	2.63	0.01
117	SLE RA 4	5	-58	604	1.6	2.7	0.01
117	SLE RA 5	5	-58	604	1.58	2.74	0.01
117	SLE RA 6	4	-60	603	1.65	2.66	0.01
117	SLE RA 7	5	-60	603	1.64	2.73	0.01
117	SLE RA 8	4	-59	603	1.63	2.65	0.01
117	SLE RA 9	5	-59	603	1.62	2.72	0.01
117	SLE RA 10	5	-63	685	1.72	3.05	0.01
117	SLE RA 11	5	-65	684	1.78	2.97	0.01
117	SLE RA 12	5	-65	684	1.77	3.04	0.01
117	SLE RA 13	5	-64	685	1.75	3.08	0.01
117	SLE RA 14	5	-67	684	1.82	3	0.01
117	SLE RA 15	5	-66	684	1.81	3.07	0.01
117	SLE RA 16	5	-66	684	1.8	2.99	0.01
117	SLE RA 17	5	-66	684	1.79	3.06	0.01
117	SLE RA 18	5	-66	719	1.81	3.08	0.01
117	SLE RA 19	5	-66	719	1.8	3.15	0.01
117	SLE RA 20	5	-68	719	1.84	3.11	0.01
117	SLE RA 21	6	-67	719	1.83	3.18	0.01
117	SLE FR 1	4	-57	604	1.56	2.59	0.01
117	SLE FR 2	4	-57	604	1.56	2.61	0.01
117	SLE FR 3	4	-57	604	1.58	2.6	0.01
117	SLE FR 4	5	-60	638	1.63	2.76	0.01
117	SLE FR 5	5	-60	638	1.65	2.75	0.01
117	SLE FR 6	5	-62	661	1.69	2.83	0.01
117	SLE QP 1	4	-57	604	1.56	2.59	0.01
117	SLE QP 2	5	-60	638	1.64	2.74	0.01
117	SLD 1	17	23	676	-0.46	12.29	0.04
117	SLD 2	17	23	676	-0.46	12.29	0.04

Nodo	Cont.	Reazione a traslazione			Reazione a rotazione		
Ind.	N.br.	x	y	z	x	y	z
117	SLD 3	19	-110	623	2.92	13.95	0.04
117	SLD 4	19	-110	623	2.92	13.95	0.04
117	SLD 5	5	167	730	-4.13	3.08	0.01
117	SLD 6	5	167	730	-4.13	3.08	0.01
117	SLD 7	12	-277	553	7.16	8.62	0.03
117	SLD 8	12	-277	553	7.16	8.62	0.03
117	SLD 9	-3	157	724	-3.89	-3.15	-0.01
117	SLD 10	-3	157	724	-3.89	-3.15	-0.01
117	SLD 11	4	-287	547	7.4	2.39	0.01
117	SLD 12	4	-287	547	7.4	2.39	0.01
117	SLD 13	-10	-9	654	0.35	-8.48	-0.02
117	SLD 14	-10	-9	654	0.35	-8.48	-0.02
117	SLD 15	-8	-143	601	3.74	-6.82	-0.02
117	SLD 16	-8	-143	601	3.74	-6.82	-0.02
117	SLV 1	34	135	727	-3.3	25.56	0.08
117	SLV 2	34	135	727	-3.3	25.56	0.08
117	SLV 3	39	-177	603	4.62	29.65	0.09
117	SLV 4	39	-177	603	4.62	29.65	0.09
117	SLV 5	5	471	853	-11.86	3.38	0.01
117	SLV 6	5	471	853	-11.86	3.38	0.01
117	SLV 7	23	-568	439	14.55	17.01	0.05
117	SLV 8	23	-568	439	14.55	17.01	0.05
117	SLV 9	-14	448	837	-11.27	-11.54	-0.03
117	SLV 10	-14	448	837	-11.27	-11.54	-0.03
117	SLV 11	4	-591	423	15.13	2.09	0.01
117	SLV 12	4	-591	423	15.13	2.09	0.01
117	SLV 13	-30	57	674	-1.34	-24.18	-0.07
117	SLV 14	-30	57	674	-1.34	-24.18	-0.07
117	SLV 15	-24	-255	550	6.58	-20.09	-0.05
117	SLV 16	-24	-255	550	6.58	-20.09	-0.05
118	SLU 1	12	512	5304	-23.57	10.37	0
118	SLU 2	4	537	5353	-24.85	2.63	0
118	SLU 3	13	527	5457	-24.24	10.72	0
118	SLU 4	8	542	5486	-25.01	6.07	0
118	SLU 5	4	543	5452	-25.14	2.86	0
118	SLU 6	13	533	5555	-24.54	10.94	0
118	SLU 7	8	548	5585	-25.31	6.29	0
118	SLU 8	13	524	5501	-24.17	10.82	0
118	SLU 9	8	540	5531	-24.93	6.18	0
118	SLU 10	6	599	5963	-27.73	4.06	0
118	SLU 11	14	589	6067	-27.12	12.14	0
118	SLU 12	9	604	6096	-27.89	7.5	0
118	SLU 13	6	605	6062	-28.02	4.28	0
118	SLU 14	14	595	6166	-27.42	12.36	0
118	SLU 15	10	610	6195	-28.19	7.72	0
118	SLU 16	14	586	6112	-27.05	12.24	0
118	SLU 17	9	602	6141	-27.81	7.6	0
118	SLU 18	14	601	6176	-27.69	12.41	0
118	SLU 19	10	616	6205	-28.45	7.76	0
118	SLU 20	15	607	6275	-27.98	12.63	0
118	SLU 21	10	622	6304	-28.75	7.99	0
118	SLU 22	14	574	5895	-26.44	11.74	0
118	SLU 23	6	599	5944	-27.72	4	0
118	SLU 24	14	589	6048	-27.12	12.08	0
118	SLU 25	9	604	6077	-27.88	7.44	0
118	SLU 26	6	606	6043	-28.02	4.23	0
118	SLU 27	14	595	6146	-27.41	12.31	0
118	SLU 28	9	610	6176	-28.18	7.66	0
118	SLU 29	14	587	6092	-27.04	12.19	0
118	SLU 30	9	602	6122	-27.8	7.54	0
118	SLU 31	7	661	6554	-30.6	5.43	0
118	SLU 32	16	651	6658	-30	13.51	0
118	SLU 33	11	666	6687	-30.76	8.86	0
118	SLU 34	7	668	6653	-30.9	5.65	0
118	SLU 35	16	657	6757	-30.29	13.73	-0.01
118	SLU 36	11	672	6786	-31.06	9.09	0
118	SLU 37	16	649	6703	-29.92	13.61	-0.01
118	SLU 38	11	664	6732	-30.68	8.97	0
118	SLU 39	16	663	6767	-30.56	13.78	-0.01
118	SLU 40	11	678	6796	-31.32	9.13	0
118	SLU 41	16	669	6865	-30.85	14	-0.01
118	SLU 42	11	684	6895	-31.62	9.36	0
118	SLU 43	15	644	6692	-29.66	13.02	0
118	SLU 44	7	670	6742	-30.93	5.28	0
118	SLU 45	16	659	6845	-30.33	13.36	-0.01
118	SLU 46	11	674	6875	-31.1	8.72	0
118	SLU 47	7	676	6840	-31.23	5.5	0
118	SLU 48	16	665	6944	-30.63	13.58	-0.01
118	SLU 49	11	680	6973	-31.39	8.94	0
118	SLU 50	16	657	6890	-30.25	13.46	-0.01
118	SLU 51	11	672	6920	-31.02	8.82	0
118	SLU 52	9	732	7352	-33.81	6.7	0
118	SLU 53	17	721	7455	-33.21	14.78	-0.01
118	SLU 54	12	736	7485	-33.98	10.14	-0.01
118	SLU 55	9	738	7451	-34.11	6.92	-0.01
118	SLU 56	18	727	7554	-33.51	15.01	-0.01
118	SLU 57	13	742	7584	-34.27	10.36	-0.01
118	SLU 58	17	719	7500	-33.13	14.89	-0.01
118	SLU 59	13	734	7530	-33.9	10.24	-0.01
118	SLU 60	18	733	7564	-33.77	15.05	-0.01
118	SLU 61	13	748	7594	-34.54	10.41	-0.01

Nodo	Cont.	Reazione a traslazione			Reazione a rotazione		
Ind.	N.br.	x	y	z	x	y	z
118	SLU 62	18	739	7663	-34.07	15.27	-0.01
118	SLU 63	13	754	7693	-34.84	10.63	-0.01
118	SLU 64	17	707	7283	-32.53	14.39	-0.01
118	SLU 65	9	732	7333	-33.81	6.65	0
118	SLU 66	17	721	7436	-33.2	14.73	-0.01
118	SLU 67	12	736	7466	-33.97	10.08	-0.01
118	SLU 68	9	738	7431	-34.1	6.87	-0.01
118	SLU 69	17	727	7535	-33.5	14.95	-0.01
118	SLU 70	13	742	7564	-34.27	10.31	-0.01
118	SLU 71	17	719	7481	-33.13	14.83	-0.01
118	SLU 72	12	734	7510	-33.89	10.19	-0.01
118	SLU 73	10	794	7943	-36.69	8.07	-0.01
118	SLU 74	19	783	8046	-36.08	16.15	-0.01
118	SLU 75	14	798	8076	-36.85	11.51	-0.01
118	SLU 76	11	800	8042	-36.98	8.29	-0.01
118	SLU 77	19	789	8145	-36.38	16.37	-0.01
118	SLU 78	14	804	8175	-37.14	11.73	-0.01
118	SLU 79	19	781	8091	-36.01	16.25	-0.01
118	SLU 80	14	796	8121	-36.77	11.61	-0.01
118	SLU 81	19	795	8155	-36.64	16.42	-0.01
118	SLU 82	14	810	8185	-37.41	11.78	-0.01
118	SLU 83	19	801	8254	-36.94	16.64	-0.01
118	SLU 84	15	816	8284	-37.71	12	-0.01
118	SLE RA 1	13	530	5473	-24.39	10.77	0
118	SLE RA 2	7	547	5506	-25.24	5.61	0
118	SLE RA 3	13	539	5575	-24.84	10.99	0
118	SLE RA 4	10	550	5594	-25.35	7.9	0
118	SLE RA 5	7	551	5571	-25.44	5.75	0
118	SLE RA 6	13	544	5640	-25.04	11.14	0
118	SLE RA 7	10	554	5660	-25.55	8.05	0
118	SLE RA 8	13	538	5604	-24.79	11.06	0
118	SLE RA 9	10	548	5624	-25.3	7.97	0
118	SLE RA 10	8	588	5912	-27.16	6.55	0
118	SLE RA 11	14	581	5981	-26.76	11.94	0
118	SLE RA 12	11	591	6001	-27.27	8.85	0
118	SLE RA 13	8	592	5978	-27.36	6.7	0
118	SLE RA 14	14	585	6047	-26.96	12.09	0
118	SLE RA 15	11	595	6067	-27.47	8.99	0
118	SLE RA 16	14	579	6011	-26.71	12.01	0
118	SLE RA 17	11	589	6031	-27.22	8.92	0
118	SLE RA 18	14	589	6054	-27.14	12.12	0
118	SLE RA 19	11	599	6074	-27.65	9.03	0
118	SLE RA 20	14	593	6120	-27.33	12.27	0
118	SLE RA 21	11	603	6140	-27.84	9.17	0
118	SLE FR 1	13	530	5473	-24.39	10.77	0
118	SLE FR 2	12	533	5479	-24.56	9.73	0
118	SLE FR 3	13	531	5499	-24.47	10.82	0
118	SLE FR 4	12	551	5654	-25.39	10.14	0
118	SLE FR 5	13	549	5673	-25.29	11.23	0
118	SLE FR 6	13	559	5763	-25.76	11.44	0
118	SLE QP 1	13	530	5473	-24.39	10.77	0
118	SLE QP 2	13	548	5647	-25.22	11.17	0
118	SLD 1	25	905	7477	-41.16	23.06	-0.02
118	SLD 2	25	905	7477	-41.16	23.06	-0.02
118	SLD 3	33	390	6854	-18.84	30.34	-0.01
118	SLD 4	33	390	6854	-18.84	30.34	-0.01
118	SLD 5	4	1436	7141	-63.85	3.7	-0.01
118	SLD 6	4	1436	7141	-63.85	3.7	-0.01
118	SLD 7	32	-280	5064	10.55	27.96	0
118	SLD 8	32	-280	5064	10.55	27.96	0
118	SLD 9	-6	1375	6230	-60.98	-5.62	0
118	SLD 10	-6	1375	6230	-60.98	-5.62	0
118	SLD 11	22	-340	4153	13.42	18.64	0
118	SLD 12	22	-340	4153	13.42	18.64	0
118	SLD 13	-7	705	4440	-31.59	-8	0.01
118	SLD 14	-7	705	4440	-31.59	-8	0.01
118	SLD 15	1	190	3817	-9.27	-0.72	0.01
118	SLD 16	1	190	3817	-9.27	-0.72	0.01
118	SLV 1	40	1390	9906	-62.75	38.69	-0.03
118	SLV 2	40	1390	9906	-62.75	38.69	-0.03
118	SLV 3	61	187	8450	-10.58	57.03	-0.03
118	SLV 4	61	187	8450	-10.58	57.03	-0.03
118	SLV 5	-11	2626	9133	-115.59	-8.4	-0.02
118	SLV 6	-11	2626	9133	-115.59	-8.4	-0.02
118	SLV 7	59	-1386	4279	58.29	52.75	0
118	SLV 8	59	-1386	4279	58.29	52.75	0
118	SLV 9	-33	2481	7015	-108.72	-30.41	0
118	SLV 10	-33	2481	7015	-108.72	-30.41	0
118	SLV 11	37	-1530	2161	65.16	30.74	0.01
118	SLV 12	37	-1530	2161	65.16	30.74	0.01
118	SLV 13	-35	908	2845	-39.85	-34.69	0.02
118	SLV 14	-35	908	2845	-39.85	-34.69	0.02
118	SLV 15	-14	-295	1388	12.31	-16.34	0.02
118	SLV 16	-14	-295	1388	12.31	-16.34	0.02
119	SLU 1	0	60	3471	-1.24	0.4	0
119	SLU 2	-3	302	3476	-12.49	-2.07	0
119	SLU 3	0	64	3567	-1.36	0.42	0
119	SLU 4	-1	209	3569	-8.11	-1.06	0
119	SLU 5	-3	304	3537	-12.58	-2.06	0
119	SLU 6	0	67	3628	-1.46	0.43	0
119	SLU 7	-1	212	3631	-8.2	-1.05	0

Nodo	Cont.	Reazione a traslazione			Reazione a rotazione		
Ind.	N.br.	x	y	z	x	y	z
119	SLU 8	0	66	3595	-1.43	0.42	0
119	SLU 9	-1	211	3597	-8.18	-1.06	0
119	SLU 10	-2	306	3965	-12.37	-2	0
119	SLU 11	0	69	4057	-1.24	0.49	0
119	SLU 12	-1	213	4059	-7.99	-0.99	0
119	SLU 13	-2	309	4027	-12.46	-1.99	0
119	SLU 14	0	71	4118	-1.34	0.51	0
119	SLU 15	-1	216	4121	-8.08	-0.98	0
119	SLU 16	0	70	4084	-1.31	0.5	0
119	SLU 17	-1	215	4087	-8.06	-0.99	0
119	SLU 18	0	66	4171	-1.07	0.5	0
119	SLU 19	-1	211	4174	-7.82	-0.98	0
119	SLU 20	0	69	4233	-1.16	0.51	0
119	SLU 21	-1	214	4235	-7.91	-0.97	0
119	SLU 22	0	67	3928	-1.26	0.47	0
119	SLU 23	-2	309	3932	-12.51	-1.99	0
119	SLU 24	0	71	4023	-1.38	0.5	0
119	SLU 25	-1	216	4026	-8.13	-0.98	0
119	SLU 26	-2	311	3994	-12.61	-1.98	0
119	SLU 27	0	74	4085	-1.48	0.51	0
119	SLU 28	-1	219	4087	-8.23	-0.97	0
119	SLU 29	0	73	4051	-1.45	0.5	0
119	SLU 30	-1	218	4054	-8.2	-0.98	0
119	SLU 31	-2	313	4422	-12.39	-1.92	0
119	SLU 32	0	76	4513	-1.26	0.57	0
119	SLU 33	-1	220	4516	-8.01	-0.91	0
119	SLU 34	-2	316	4484	-12.49	-1.91	0
119	SLU 35	0	78	4575	-1.36	0.58	0
119	SLU 36	-1	223	4577	-8.11	-0.9	0
119	SLU 37	0	77	4541	-1.33	0.57	0
119	SLU 38	-1	222	4544	-8.08	-0.91	0
119	SLU 39	0	73	4628	-1.09	0.58	0
119	SLU 40	-1	218	4630	-7.84	-0.9	0
119	SLU 41	0	76	4690	-1.19	0.59	0
119	SLU 42	-1	221	4692	-7.94	-0.89	0
119	SLU 43	0	76	4356	-1.61	0.49	0
119	SLU 44	-2	317	4360	-12.85	-1.98	0
119	SLU 45	0	80	4451	-1.73	0.51	0
119	SLU 46	-1	225	4454	-8.48	-0.97	0
119	SLU 47	-2	320	4422	-12.95	-1.97	0
119	SLU 48	0	83	4513	-1.82	0.53	0
119	SLU 49	-1	228	4515	-8.57	-0.96	0
119	SLU 50	0	82	4479	-1.79	0.52	0
119	SLU 51	-1	227	4482	-8.54	-0.97	0
119	SLU 52	-2	322	4850	-12.73	-1.9	0
119	SLU 53	0	84	4941	-1.61	0.59	0
119	SLU 54	-1	229	4944	-8.36	-0.89	0
119	SLU 55	-2	324	4912	-12.83	-1.89	0
119	SLU 56	0	87	5003	-1.7	0.6	0
119	SLU 57	-1	232	5005	-8.45	-0.88	0
119	SLU 58	0	86	4969	-1.67	0.59	0
119	SLU 59	-1	231	4972	-8.42	-0.89	0
119	SLU 60	0	82	5056	-1.43	0.59	0
119	SLU 61	-1	227	5059	-8.18	-0.89	0
119	SLU 62	0	85	5118	-1.53	0.61	0
119	SLU 63	-1	230	5120	-8.28	-0.87	0
119	SLU 64	0	83	4813	-1.63	0.57	0
119	SLU 65	-2	324	4817	-12.88	-1.9	0
119	SLU 66	0	87	4908	-1.75	0.59	0
119	SLU 67	-1	232	4910	-8.5	-0.89	0
119	SLU 68	-2	327	4879	-12.97	-1.89	0
119	SLU 69	0	90	4970	-1.84	0.6	0
119	SLU 70	-1	235	4972	-8.59	-0.88	0
119	SLU 71	0	89	4936	-1.82	0.59	0
119	SLU 72	-1	234	4938	-8.56	-0.89	0
119	SLU 73	-2	329	5307	-12.76	-1.83	0
119	SLU 74	0	91	5398	-1.63	0.66	0
119	SLU 75	-1	236	5400	-8.38	-0.82	0
119	SLU 76	-2	331	5369	-12.85	-1.82	0
119	SLU 77	0	94	5460	-1.72	0.68	0
119	SLU 78	-1	239	5462	-8.47	-0.81	0
119	SLU 79	0	93	5426	-1.7	0.67	0
119	SLU 80	-1	238	5428	-8.44	-0.82	0
119	SLU 81	0	89	5513	-1.46	0.67	0
119	SLU 82	-1	234	5515	-8.21	-0.81	0
119	SLU 83	0	92	5574	-1.55	0.68	0
119	SLU 84	-1	237	5577	-8.3	-0.8	0
119	SLE RA 1	0	62	3602	-1.25	0.42	0
119	SLE RA 2	-2	223	3605	-8.75	-1.23	0
119	SLE RA 3	0	65	3665	-1.33	0.44	0
119	SLE RA 4	-1	161	3667	-5.83	-0.55	0
119	SLE RA 5	-2	225	3646	-8.81	-1.22	0
119	SLE RA 6	0	67	3706	-1.39	0.44	0
119	SLE RA 7	-1	163	3708	-5.89	-0.54	0
119	SLE RA 8	0	66	3684	-1.37	0.44	0
119	SLE RA 9	-1	163	3686	-5.87	-0.55	0
119	SLE RA 10	-2	226	3931	-8.67	-1.18	0
119	SLE RA 11	0	68	3992	-1.25	0.48	0
119	SLE RA 12	-1	164	3994	-5.75	-0.5	0
119	SLE RA 13	-2	228	3972	-8.73	-1.17	0
119	SLE RA 14	0	70	4033	-1.31	0.49	0

Nodo	Cont.	Reazione a traslazione			Reazione a rotazione		
Ind.	N.br.	x	y	z	x	y	z
119	SLE RA 15	-1	166	4035	-5.81	-0.5	0
119	SLE RA 16	0	69	4011	-1.29	0.48	0
119	SLE RA 17	-1	166	4012	-5.79	-0.5	0
119	SLE RA 18	0	66	4068	-1.13	0.49	0
119	SLE RA 19	-1	163	4070	-5.63	-0.5	0
119	SLE RA 20	0	68	4110	-1.2	0.5	0
119	SLE RA 21	-1	165	4111	-5.7	-0.49	0
119	SLE FR 1	0	62	3602	-1.25	0.42	0
119	SLE FR 2	0	94	3602	-2.75	0.09	0
119	SLE FR 3	0	63	3618	-1.27	0.42	0
119	SLE FR 4	0	96	3742	-2.71	0.11	0
119	SLE FR 5	0	64	3758	-1.24	0.44	0
119	SLE FR 6	0	64	3835	-1.19	0.45	0
119	SLE QP 1	0	62	3602	-1.25	0.42	0
119	SLE QP 2	0	63	3742	-1.21	0.44	0
119	SLD 1	3	477	3972	-20.16	3.93	0
119	SLD 2	3	477	3972	-20.16	3.93	0
119	SLD 3	6	31	3743	0.29	6.24	0
119	SLD 4	6	31	3743	0.29	6.24	0
119	SLD 5	-3	865	4159	-37.92	-2.02	0
119	SLD 6	-3	865	4159	-37.92	-2.02	0
119	SLD 7	6	-624	3394	30.26	5.69	0
119	SLD 8	6	-624	3394	30.26	5.69	0
119	SLD 9	-5	751	4089	-32.68	-4.81	0
119	SLD 10	-5	751	4089	-32.68	-4.81	0
119	SLD 11	3	-738	3325	35.49	2.91	0
119	SLD 12	3	-738	3325	35.49	2.91	0
119	SLD 13	-5	96	3741	-2.72	-5.36	0
119	SLD 14	-5	96	3741	-2.72	-5.36	0
119	SLD 15	-3	-350	3511	17.73	-3.05	0
119	SLD 16	-3	-350	3511	17.73	-3.05	0
119	SLV 1	7	1048	4277	-46.35	8.69	0
119	SLV 2	7	1048	4277	-46.35	8.69	0
119	SLV 3	14	1	3737	1.61	14.6	-0.01
119	SLV 4	14	1	3737	1.61	14.6	-0.01
119	SLV 5	-7	1947	4721	-87.49	-6.04	0
119	SLV 6	-7	1947	4721	-87.49	-6.04	0
119	SLV 7	14	-1543	2922	72.37	13.64	-0.01
119	SLV 8	14	-1543	2922	72.37	13.64	-0.01
119	SLV 9	-14	1670	4562	-74.8	-12.76	0.01
119	SLV 10	-14	1670	4562	-74.8	-12.76	0.01
119	SLV 11	8	-1820	2762	85.06	6.92	0
119	SLV 12	8	-1820	2762	85.06	6.92	0
119	SLV 13	-13	125	3746	-4.04	-13.71	0.01
119	SLV 14	-13	125	3746	-4.04	-13.71	0.01
119	SLV 15	-7	-921	3206	43.92	-7.81	0
119	SLV 16	-7	-921	3206	43.92	-7.81	0
120	SLU 1	0	371	1127	-15.91	-0.69	0
120	SLU 2	0	419	1159	-17.91	0.23	0
120	SLU 3	0	384	1138	-16.43	-0.71	0
120	SLU 4	0	412	1157	-17.63	-0.16	0
120	SLU 5	0	426	1166	-18.23	0.21	0
120	SLU 6	0	391	1144	-16.76	-0.73	0
120	SLU 7	0	420	1164	-17.96	-0.18	0
120	SLU 8	0	387	1140	-16.56	-0.73	0
120	SLU 9	0	415	1160	-17.76	-0.17	0
120	SLU 10	0	470	1205	-20.1	0.14	0
120	SLU 11	0	435	1184	-18.62	-0.8	0
120	SLU 12	0	464	1203	-19.82	-0.25	0
120	SLU 13	0	478	1212	-20.43	0.12	0
120	SLU 14	0	443	1191	-18.95	-0.82	0
120	SLU 15	0	471	1210	-20.15	-0.27	0
120	SLU 16	0	438	1187	-18.75	-0.82	0
120	SLU 17	0	467	1206	-19.95	-0.26	0
120	SLU 18	0	445	1193	-19.04	-0.82	0
120	SLU 19	0	473	1212	-20.24	-0.27	0
120	SLU 20	0	453	1200	-19.36	-0.84	0
120	SLU 21	0	481	1219	-20.56	-0.28	0
120	SLU 22	0	421	1171	-18.02	-0.78	0
120	SLU 23	0	468	1203	-20.02	0.14	0
120	SLU 24	0	433	1182	-18.54	-0.8	0
120	SLU 25	0	462	1201	-19.74	-0.25	0
120	SLU 26	0	476	1210	-20.35	0.13	0
120	SLU 27	0	441	1189	-18.87	-0.82	0
120	SLU 28	0	469	1208	-20.07	-0.27	0
120	SLU 29	0	436	1185	-18.67	-0.81	0
120	SLU 30	0	465	1204	-19.87	-0.26	0
120	SLU 31	0	520	1250	-22.21	0.05	0
120	SLU 32	0	485	1228	-20.74	-0.89	0
120	SLU 33	0	513	1248	-21.94	-0.34	0
120	SLU 34	0	527	1256	-22.54	0.04	0
120	SLU 35	0	492	1235	-21.06	-0.91	0
120	SLU 36	0	521	1254	-22.26	-0.36	0
120	SLU 37	0	488	1231	-20.86	-0.9	0
120	SLU 38	0	516	1250	-22.06	-0.35	0
120	SLU 39	0	495	1238	-21.15	-0.91	0
120	SLU 40	0	523	1257	-22.35	-0.35	0
120	SLU 41	0	502	1244	-21.48	-0.92	0
120	SLU 42	0	531	1263	-22.68	-0.37	0
120	SLU 43	0	466	1450	-19.95	-0.87	0
120	SLU 44	0	513	1482	-21.96	0.06	0

Nodo	Cont.	Reazione a traslazione			Reazione a rotazione		
Ind.	N.br.	x	y	z	x	y	z
120	SLU 45	0	478	1461	-20.48	-0.89	0
120	SLU 46	0	506	1480	-21.68	-0.34	0
120	SLU 47	0	521	1489	-22.28	0.04	0
120	SLU 48	0	486	1467	-20.8	-0.91	0
120	SLU 49	0	514	1487	-22.01	-0.36	0
120	SLU 50	0	481	1463	-20.61	-0.9	0
120	SLU 51	0	509	1483	-21.81	-0.35	0
120	SLU 52	0	565	1528	-24.15	-0.03	0
120	SLU 53	0	530	1507	-22.67	-0.98	0
120	SLU 54	0	558	1526	-23.87	-0.43	0
120	SLU 55	0	572	1535	-24.47	-0.05	0
120	SLU 56	0	537	1514	-23	-1	0
120	SLU 57	0	566	1533	-24.2	-0.45	0
120	SLU 58	0	533	1510	-22.8	-0.99	0
120	SLU 59	0	561	1529	-24	-0.44	0
120	SLU 60	0	539	1516	-23.08	-0.99	0
120	SLU 61	0	568	1535	-24.29	-0.44	0
120	SLU 62	0	547	1523	-23.41	-1.01	0
120	SLU 63	0	575	1542	-24.61	-0.46	0
120	SLU 64	0	515	1494	-22.07	-0.95	0
120	SLU 65	0	563	1526	-24.07	-0.03	0
120	SLU 66	0	528	1505	-22.59	-0.98	0
120	SLU 67	0	556	1524	-23.79	-0.43	0
120	SLU 68	0	570	1533	-24.39	-0.05	0
120	SLU 69	0	535	1512	-22.92	-1	0
120	SLU 70	0	564	1531	-24.12	-0.44	0
120	SLU 71	0	531	1508	-22.72	-0.99	0
120	SLU 72	0	559	1527	-23.92	-0.44	0
120	SLU 73	0	614	1573	-26.26	-0.12	0
120	SLU 74	0	579	1551	-24.78	-1.07	0
120	SLU 75	0	608	1570	-25.98	-0.52	0
120	SLU 76	0	622	1579	-26.59	-0.14	0
120	SLU 77	0	587	1558	-25.11	-1.09	0
120	SLU 78	0	615	1577	-26.31	-0.53	0
120	SLU 79	0	582	1554	-24.91	-1.08	0
120	SLU 80	0	611	1573	-26.11	-0.53	0
120	SLU 81	0	589	1560	-25.2	-1.08	0
120	SLU 82	0	617	1580	-26.4	-0.53	0
120	SLU 83	0	597	1567	-25.52	-1.1	0
120	SLU 84	0	625	1586	-26.72	-0.55	0
120	SLE RA 1	0	385	1140	-16.51	-0.71	0
120	SLE RA 2	0	417	1161	-17.84	-0.1	0
120	SLE RA 3	0	394	1147	-16.86	-0.73	0
120	SLE RA 4	0	413	1160	-17.66	-0.36	0
120	SLE RA 5	0	422	1165	-18.06	-0.11	0
120	SLE RA 6	0	399	1151	-17.08	-0.74	0
120	SLE RA 7	0	418	1164	-17.88	-0.37	0
120	SLE RA 8	0	396	1149	-16.94	-0.74	0
120	SLE RA 9	0	415	1161	-17.75	-0.37	0
120	SLE RA 10	0	451	1192	-19.31	-0.16	0
120	SLE RA 11	0	428	1178	-18.32	-0.79	0
120	SLE RA 12	0	447	1191	-19.12	-0.42	0
120	SLE RA 13	0	457	1196	-19.52	-0.17	0
120	SLE RA 14	0	433	1182	-18.54	-0.8	0
120	SLE RA 15	0	452	1195	-19.34	-0.44	0
120	SLE RA 16	0	430	1180	-18.41	-0.8	0
120	SLE RA 17	0	449	1192	-19.21	-0.43	0
120	SLE RA 18	0	435	1184	-18.6	-0.8	0
120	SLE RA 19	0	454	1197	-19.4	-0.43	0
120	SLE RA 20	0	440	1188	-18.81	-0.81	0
120	SLE RA 21	0	459	1201	-19.62	-0.44	0
120	SLE FR 1	0	385	1140	-16.51	-0.71	0
120	SLE FR 2	0	392	1144	-16.78	-0.59	0
120	SLE FR 3	0	388	1141	-16.6	-0.72	0
120	SLE FR 4	0	407	1157	-17.4	-0.62	0
120	SLE FR 5	0	402	1155	-17.22	-0.75	0
120	SLE FR 6	0	410	1162	-17.55	-0.76	0
120	SLE QP 1	0	385	1140	-16.51	-0.71	0
120	SLE QP 2	0	400	1153	-17.14	-0.74	0
120	SLD 1	16	457	1174	-19.48	31.72	0
120	SLD 2	16	457	1174	-19.48	31.72	0
120	SLD 3	21	70	912	-2.99	38.89	0
120	SLD 4	21	70	912	-2.99	38.89	0
120	SLD 5	-2	1004	1557	-42.85	-1.88	0
120	SLD 6	-2	1004	1557	-42.85	-1.88	0
120	SLD 7	12	-285	683	12.12	22.03	0
120	SLD 8	12	-285	683	12.12	22.03	0
120	SLD 9	-13	1086	1623	-46.39	-23.51	0
120	SLD 10	-13	1086	1623	-46.39	-23.51	0
120	SLD 11	1	-203	749	8.58	0.4	0
120	SLD 12	1	-203	749	8.58	0.4	0
120	SLD 13	-21	730	1394	-31.28	-40.37	0
120	SLD 14	-21	730	1394	-31.28	-40.37	0
120	SLD 15	-17	344	1132	-14.79	-33.2	0
120	SLD 16	-17	344	1132	-14.79	-33.2	0
120	SLV 1	41	529	1200	-22.49	79.62	0
120	SLV 2	41	529	1200	-22.49	79.62	0
120	SLV 3	52	-373	588	15.99	97.76	0
120	SLV 4	52	-373	588	15.99	97.76	0
120	SLV 5	-4	1807	2095	-77.1	-4.15	0
120	SLV 6	-4	1807	2095	-77.1	-4.15	0

Nodo	Cont.	Reazione a traslazione			Reazione a rotazione		
Ind.	N.br.	x	y	z	x	y	z
120	SLV 7	31	-1200	55	51.16	56.33	0
120	SLV 8	31	-1200	55	51.16	56.33	0
120	SLV 9	-32	2000	2251	-85.44	-57.81	0
120	SLV 10	-32	2000	2251	-85.44	-57.81	0
120	SLV 11	3	-1007	210	42.83	2.67	0
120	SLV 12	3	-1007	210	42.83	2.67	0
120	SLV 13	-52	1173	1718	-50.27	-99.24	0
120	SLV 14	-52	1173	1718	-50.27	-99.24	0
120	SLV 15	-42	271	1106	-11.79	-81.1	0
120	SLV 16	-42	271	1106	-11.79	-81.1	0
121	SLU 1	7	-232	4487	13.11	5.02	-0.01
121	SLU 2	7	-240	4464	13.47	4.96	-0.01
121	SLU 3	8	-233	4621	13.24	5.2	-0.01
121	SLU 4	8	-238	4607	13.45	5.16	-0.01
121	SLU 5	8	-241	4559	13.55	5.09	-0.01
121	SLU 6	8	-233	4717	13.32	5.33	-0.01
121	SLU 7	8	-238	4703	13.54	5.29	-0.01
121	SLU 8	8	-233	4678	13.28	5.28	-0.01
121	SLU 9	8	-238	4664	13.49	5.24	-0.01
121	SLU 10	8	-274	5137	15.37	5.76	-0.01
121	SLU 11	9	-266	5294	15.14	5.99	-0.01
121	SLU 12	9	-271	5280	15.35	5.96	-0.01
121	SLU 13	9	-274	5232	15.45	5.89	-0.01
121	SLU 14	9	-266	5390	15.22	6.12	-0.01
121	SLU 15	9	-271	5376	15.44	6.09	-0.01
121	SLU 16	9	-266	5351	15.18	6.07	-0.01
121	SLU 17	9	-271	5337	15.39	6.04	-0.01
121	SLU 18	9	-280	5448	15.83	6.16	-0.01
121	SLU 19	9	-285	5435	16.04	6.12	-0.01
121	SLU 20	9	-280	5544	15.91	6.28	-0.01
121	SLU 21	9	-285	5530	16.12	6.25	-0.01
121	SLU 22	8	-251	5049	14.35	5.67	-0.01
121	SLU 23	8	-260	5026	14.71	5.62	-0.01
121	SLU 24	9	-252	5183	14.48	5.85	-0.01
121	SLU 25	9	-257	5170	14.69	5.82	-0.01
121	SLU 26	8	-260	5121	14.79	5.75	-0.01
121	SLU 27	9	-252	5279	14.56	5.98	-0.01
121	SLU 28	9	-257	5265	14.77	5.95	-0.01
121	SLU 29	9	-252	5240	14.52	5.93	-0.01
121	SLU 30	9	-257	5226	14.73	5.9	-0.01
121	SLU 31	9	-293	5699	16.61	6.41	-0.01
121	SLU 32	10	-285	5856	16.38	6.65	-0.01
121	SLU 33	10	-290	5842	16.59	6.61	-0.01
121	SLU 34	10	-293	5794	16.69	6.54	-0.01
121	SLU 35	10	-286	5952	16.46	6.78	-0.01
121	SLU 36	10	-291	5938	16.67	6.74	-0.01
121	SLU 37	10	-285	5913	16.42	6.73	-0.01
121	SLU 38	10	-290	5899	16.63	6.69	-0.01
121	SLU 39	10	-299	6011	17.07	6.81	-0.01
121	SLU 40	10	-304	5997	17.28	6.77	-0.01
121	SLU 41	10	-299	6106	17.15	6.94	-0.01
121	SLU 42	10	-304	6092	17.36	6.9	-0.01
121	SLU 43	9	-295	5641	16.62	6.3	-0.01
121	SLU 44	9	-303	5617	16.98	6.24	-0.01
121	SLU 45	10	-296	5775	16.75	6.48	-0.01
121	SLU 46	9	-301	5761	16.96	6.45	-0.01
121	SLU 47	9	-304	5713	17.06	6.37	-0.01
121	SLU 48	10	-296	5870	16.83	6.61	-0.01
121	SLU 49	10	-301	5856	17.04	6.58	-0.01
121	SLU 50	10	-296	5831	16.79	6.56	-0.01
121	SLU 51	10	-300	5817	17	6.53	-0.01
121	SLU 52	10	-337	6290	18.88	7.04	-0.01
121	SLU 53	11	-329	6448	18.65	7.28	-0.01
121	SLU 54	11	-334	6434	18.86	7.24	-0.01
121	SLU 55	11	-337	6386	18.96	7.17	-0.01
121	SLU 56	11	-329	6543	18.73	7.4	-0.01
121	SLU 57	11	-334	6529	18.94	7.37	-0.01
121	SLU 58	11	-329	6504	18.69	7.35	-0.01
121	SLU 59	11	-334	6490	18.9	7.32	-0.01
121	SLU 60	11	-343	6602	19.34	7.44	-0.01
121	SLU 61	11	-348	6588	19.55	7.4	-0.01
121	SLU 62	11	-343	6697	19.42	7.57	-0.01
121	SLU 63	11	-348	6683	19.63	7.53	-0.01
121	SLU 64	10	-314	6203	17.86	6.96	-0.01
121	SLU 65	10	-323	6179	18.22	6.9	-0.01
121	SLU 66	11	-315	6337	17.99	7.14	-0.01
121	SLU 67	10	-320	6323	18.2	7.1	-0.01
121	SLU 68	10	-323	6275	18.3	7.03	-0.01
121	SLU 69	11	-315	6432	18.07	7.26	-0.01
121	SLU 70	11	-320	6418	18.28	7.23	-0.01
121	SLU 71	11	-315	6393	18.03	7.21	-0.01
121	SLU 72	11	-320	6379	18.24	7.18	-0.01
121	SLU 73	11	-356	6852	20.12	7.69	-0.01
121	SLU 74	12	-348	7010	19.89	7.93	-0.01
121	SLU 75	12	-353	6996	20.1	7.89	-0.01
121	SLU 76	12	-356	6948	20.2	7.82	-0.01
121	SLU 77	12	-349	7105	19.97	8.06	-0.01
121	SLU 78	12	-354	7091	20.18	8.02	-0.01
121	SLU 79	12	-348	7066	19.93	8.01	-0.01
121	SLU 80	12	-353	7052	20.14	7.97	-0.01
121	SLU 81	12	-362	7164	20.58	8.09	-0.02

Nodo	Cont.	Reazione a traslazione			Reazione a rotazione		
Ind.	N.br.	x	y	z	x	y	z
121	SLU 82	12	-367	7150	20.79	8.06	-0.02
121	SLU 83	12	-362	7259	20.66	8.22	-0.02
121	SLU 84	12	-367	7245	20.87	8.19	-0.02
121	SLE RA 1	8	-238	4648	13.47	5.21	-0.01
121	SLE RA 2	8	-243	4632	13.71	5.17	-0.01
121	SLE RA 3	8	-238	4737	13.55	5.33	-0.01
121	SLE RA 4	8	-241	4728	13.69	5.3	-0.01
121	SLE RA 5	8	-243	4696	13.76	5.25	-0.01
121	SLE RA 6	8	-238	4801	13.61	5.41	-0.01
121	SLE RA 7	8	-241	4792	13.75	5.39	-0.01
121	SLE RA 8	8	-238	4775	13.58	5.38	-0.01
121	SLE RA 9	8	-241	4766	13.72	5.36	-0.01
121	SLE RA 10	8	-265	5081	14.97	5.7	-0.01
121	SLE RA 11	9	-260	5186	14.82	5.86	-0.01
121	SLE RA 12	9	-264	5177	14.96	5.83	-0.01
121	SLE RA 13	9	-266	5144	15.03	5.78	-0.01
121	SLE RA 14	9	-260	5249	14.87	5.94	-0.01
121	SLE RA 15	9	-264	5240	15.02	5.92	-0.01
121	SLE RA 16	9	-260	5223	14.84	5.91	-0.01
121	SLE RA 17	9	-264	5214	14.99	5.89	-0.01
121	SLE RA 18	9	-269	5289	15.28	5.96	-0.01
121	SLE RA 19	9	-273	5279	15.42	5.94	-0.01
121	SLE RA 20	9	-270	5352	15.33	6.05	-0.01
121	SLE RA 21	9	-273	5343	15.47	6.03	-0.01
121	SLE FR 1	8	-238	4648	13.47	5.21	-0.01
121	SLE FR 2	8	-239	4645	13.52	5.2	-0.01
121	SLE FR 3	8	-238	4673	13.49	5.24	-0.01
121	SLE FR 4	8	-248	4837	14.06	5.43	-0.01
121	SLE FR 5	8	-247	4865	14.03	5.47	-0.01
121	SLE FR 6	8	-253	4968	14.37	5.59	-0.01
121	SLE QP 1	8	-238	4648	13.47	5.21	-0.01
121	SLE QP 2	8	-247	4840	14.01	5.43	-0.01
121	SLD 1	17	-183	4433	11.1	12.83	-0.02
121	SLD 2	17	-183	4433	11.1	12.83	-0.02
121	SLD 3	16	-654	4359	33.25	14.2	-0.02
121	SLD 4	16	-654	4359	33.25	14.2	-0.02
121	SLD 5	13	487	4831	-20.46	5.58	-0.02
121	SLD 6	13	487	4831	-20.46	5.58	-0.02
121	SLD 7	8	-1085	4583	53.38	10.14	-0.01
121	SLD 8	8	-1085	4583	53.38	10.14	-0.01
121	SLD 9	8	590	5097	-25.36	0.73	-0.01
121	SLD 10	8	590	5097	-25.36	0.73	-0.01
121	SLD 11	3	-982	4849	48.48	5.29	0
121	SLD 12	3	-982	4849	48.48	5.29	0
121	SLD 13	0	160	5321	-5.23	-3.33	0
121	SLD 14	0	160	5321	-5.23	-3.33	0
121	SLD 15	-1	-312	5247	16.92	-1.96	0
121	SLD 16	-1	-312	5247	16.92	-1.96	0
121	SLV 1	31	-92	3901	7.03	23.16	-0.04
121	SLV 2	31	-92	3901	7.03	23.16	-0.04
121	SLV 3	27	-1193	3726	58.72	26.42	-0.04
121	SLV 4	27	-1193	3726	58.72	26.42	-0.04
121	SLV 5	20	1469	4824	-66.49	5.82	-0.03
121	SLV 6	20	1469	4824	-66.49	5.82	-0.03
121	SLV 7	8	-2200	4240	105.83	16.66	-0.01
121	SLV 8	8	-2200	4240	105.83	16.66	-0.01
121	SLV 9	8	1706	5440	-77.81	-5.79	-0.01
121	SLV 10	8	1706	5440	-77.81	-5.79	-0.01
121	SLV 11	-4	-1963	4856	94.51	5.05	0.01
121	SLV 12	-4	-1963	4856	94.51	5.05	0.01
121	SLV 13	-11	699	5954	-30.7	-15.55	0.02
121	SLV 14	-11	699	5954	-30.7	-15.55	0.02
121	SLV 15	-15	-402	5779	20.99	-12.29	0.02
121	SLV 16	-15	-402	5779	20.99	-12.29	0.02
122	SLU 1	4	-223	4184	9.71	3.23	0.01
122	SLU 2	4	-223	4153	9.7	3.36	0.01
122	SLU 3	4	-226	4298	9.87	3.34	0.01
122	SLU 4	4	-226	4280	9.86	3.41	0.01
122	SLU 5	4	-226	4231	9.84	3.43	0.01
122	SLU 6	4	-230	4375	10.02	3.41	0.01
122	SLU 7	5	-229	4357	10.01	3.48	0.01
122	SLU 8	4	-229	4338	10	3.37	0.01
122	SLU 9	4	-229	4320	9.99	3.45	0.01
122	SLU 10	5	-250	4760	10.95	3.62	0.01
122	SLU 11	5	-254	4905	11.13	3.6	0.01
122	SLU 12	5	-254	4887	11.12	3.67	0.01
122	SLU 13	5	-253	4837	11.1	3.69	0.01
122	SLU 14	5	-257	4982	11.27	3.67	0.01
122	SLU 15	5	-257	4964	11.27	3.74	0.01
122	SLU 16	5	-257	4945	11.26	3.63	0.01
122	SLU 17	5	-256	4926	11.25	3.71	0.01
122	SLU 18	4	-262	5050	11.51	3.61	0.01
122	SLU 19	5	-262	5032	11.5	3.68	0.01
122	SLU 20	5	-265	5127	11.65	3.68	0.01
122	SLU 21	5	-265	5109	11.64	3.75	0.01
122	SLU 22	5	-243	4692	10.63	3.65	0.01
122	SLU 23	5	-242	4662	10.61	3.77	0.01
122	SLU 24	5	-246	4806	10.79	3.75	0.01
122	SLU 25	5	-246	4788	10.78	3.83	0.01
122	SLU 26	5	-246	4739	10.76	3.84	0.01
122	SLU 27	5	-249	4883	10.94	3.82	0.01

Nodo	Cont.	Reazione a traslazione			Reazione a rotazione		
Ind.	N.br.	x	y	z	x	y	z
122	SLU 28	5	-249	4865	10.93	3.9	0.01
122	SLU 29	5	-249	4846	10.92	3.79	0.01
122	SLU 30	5	-249	4828	10.91	3.86	0.01
122	SLU 31	5	-270	5268	11.87	4.03	0.01
122	SLU 32	5	-273	5413	12.05	4.01	0.01
122	SLU 33	5	-273	5395	12.04	4.09	0.01
122	SLU 34	5	-273	5345	12.01	4.1	0.01
122	SLU 35	5	-276	5490	12.19	4.08	0.01
122	SLU 36	5	-276	5472	12.18	4.16	0.01
122	SLU 37	5	-276	5453	12.17	4.05	0.01
122	SLU 38	5	-276	5434	12.16	4.12	0.01
122	SLU 39	5	-281	5558	12.42	4.02	0.01
122	SLU 40	5	-281	5540	12.42	4.1	0.01
122	SLU 41	5	-284	5635	12.57	4.09	0.01
122	SLU 42	5	-284	5617	12.56	4.17	0.01
122	SLU 43	5	-283	5265	12.31	4.06	0.01
122	SLU 44	5	-283	5234	12.29	4.19	0.01
122	SLU 45	5	-287	5379	12.47	4.17	0.01
122	SLU 46	6	-287	5361	12.46	4.24	0.01
122	SLU 47	6	-286	5312	12.44	4.26	0.01
122	SLU 48	6	-290	5456	12.62	4.24	0.01
122	SLU 49	6	-290	5438	12.61	4.31	0.01
122	SLU 50	5	-290	5419	12.6	4.2	0.01
122	SLU 51	6	-290	5401	12.59	4.28	0.01
122	SLU 52	6	-310	5841	13.55	4.45	0.01
122	SLU 53	6	-314	5986	13.73	4.43	0.01
122	SLU 54	6	-314	5967	13.72	4.5	0.01
122	SLU 55	6	-314	5918	13.69	4.52	0.01
122	SLU 56	6	-317	6063	13.87	4.5	0.01
122	SLU 57	6	-317	6045	13.86	4.57	0.01
122	SLU 58	6	-317	6026	13.85	4.46	0.01
122	SLU 59	6	-317	6007	13.84	4.54	0.01
122	SLU 60	6	-322	6131	14.1	4.43	0.01
122	SLU 61	6	-322	6113	14.1	4.51	0.01
122	SLU 62	6	-325	6208	14.25	4.5	0.01
122	SLU 63	6	-325	6190	14.24	4.58	0.01
122	SLU 64	6	-303	5773	13.23	4.48	0.01
122	SLU 65	6	-303	5742	13.21	4.6	0.01
122	SLU 66	6	-306	5887	13.39	4.58	0.01
122	SLU 67	6	-306	5869	13.38	4.66	0.01
122	SLU 68	6	-306	5820	13.36	4.67	0.01
122	SLU 69	6	-309	5964	13.53	4.65	0.01
122	SLU 70	6	-309	5946	13.52	4.73	0.01
122	SLU 71	6	-309	5927	13.51	4.62	0.01
122	SLU 72	6	-309	5909	13.51	4.69	0.01
122	SLU 73	6	-330	6349	14.47	4.86	0.01
122	SLU 74	6	-333	6494	14.65	4.84	0.01
122	SLU 75	6	-333	6476	14.64	4.92	0.01
122	SLU 76	6	-333	6426	14.61	4.93	0.01
122	SLU 77	6	-336	6571	14.79	4.91	0.01
122	SLU 78	6	-336	6553	14.78	4.99	0.01
122	SLU 79	6	-336	6534	14.77	4.88	0.01
122	SLU 80	6	-336	6515	14.76	4.95	0.01
122	SLU 81	6	-342	6639	15.02	4.85	0.01
122	SLU 82	6	-342	6621	15.01	4.92	0.01
122	SLU 83	6	-345	6716	15.17	4.92	0.01
122	SLU 84	6	-345	6698	15.16	4.99	0.01
122	SLE RA 1	4	-229	4329	9.97	3.35	0.01
122	SLE RA 2	4	-229	4309	9.96	3.44	0.01
122	SLE RA 3	4	-231	4405	10.08	3.42	0.01
122	SLE RA 4	4	-231	4393	10.08	3.47	0.01
122	SLE RA 5	4	-231	4360	10.06	3.48	0.01
122	SLE RA 6	4	-233	4457	10.18	3.47	0.01
122	SLE RA 7	5	-233	4444	10.17	3.52	0.01
122	SLE RA 8	4	-233	4432	10.16	3.45	0.01
122	SLE RA 9	5	-233	4420	10.16	3.5	0.01
122	SLE RA 10	5	-247	4713	10.8	3.61	0.01
122	SLE RA 11	5	-249	4810	10.92	3.6	0.01
122	SLE RA 12	5	-249	4797	10.91	3.65	0.01
122	SLE RA 13	5	-249	4765	10.9	3.66	0.01
122	SLE RA 14	5	-251	4861	11.02	3.64	0.01
122	SLE RA 15	5	-251	4849	11.01	3.69	0.01
122	SLE RA 16	5	-251	4836	11	3.62	0.01
122	SLE RA 17	5	-251	4824	11	3.67	0.01
122	SLE RA 18	5	-255	4907	11.17	3.6	0.01
122	SLE RA 19	5	-255	4895	11.16	3.65	0.01
122	SLE RA 20	5	-257	4958	11.27	3.65	0.01
122	SLE RA 21	5	-257	4946	11.26	3.7	0.01
122	SLE FR 1	4	-229	4329	9.97	3.35	0.01
122	SLE FR 2	4	-229	4325	9.97	3.37	0.01
122	SLE FR 3	4	-230	4350	10.01	3.37	0.01
122	SLE FR 4	4	-236	4498	10.33	3.44	0.01
122	SLE FR 5	4	-237	4523	10.37	3.45	0.01
122	SLE FR 6	4	-242	4618	10.57	3.48	0.01
122	SLE QP 1	4	-229	4329	9.97	3.35	0.01
122	SLE QP 2	4	-236	4502	10.33	3.43	0.01
122	SLD 1	18	198	5012	-10.49	13.84	0.04
122	SLD 2	18	198	5012	-10.49	13.84	0.04
122	SLD 3	20	-267	4962	11.66	15.68	0.04
122	SLD 4	20	-267	4962	11.66	15.68	0.04
122	SLD 5	5	599	4732	-29.51	3.76	0.01

Nodo	Cont.	Reazione a traslazione			Reazione a rotazione		
Ind.	N.br.	x	y	z	x	y	z
122	SLD 6	5	599	4732	-29.51	3.76	0.01
122	SLD 7	12	-951	4564	44.33	9.9	0.03
122	SLD 8	12	-951	4564	44.33	9.9	0.03
122	SLD 9	-4	478	4441	-23.66	-3.04	-0.01
122	SLD 10	-4	478	4441	-23.66	-3.04	-0.01
122	SLD 11	4	-1072	4273	50.17	3.1	0.01
122	SLD 12	4	-1072	4273	50.17	3.1	0.01
122	SLD 13	-11	-206	4043	9	-8.83	-0.02
122	SLD 14	-11	-206	4043	9	-8.83	-0.02
122	SLD 15	-9	-671	3992	31.15	-6.99	-0.02
122	SLD 16	-9	-671	3992	31.15	-6.99	-0.02
122	SLV 1	36	771	5679	-37.93	28.17	0.07
122	SLV 2	36	771	5679	-37.93	28.17	0.07
122	SLV 3	41	-314	5560	13.74	32.69	0.08
122	SLV 4	41	-314	5560	13.74	32.69	0.08
122	SLV 5	6	1711	5036	-82.53	3.99	0.01
122	SLV 6	6	1711	5036	-82.53	3.99	0.01
122	SLV 7	23	-1905	4639	89.73	19.07	0.05
122	SLV 8	23	-1905	4639	89.73	19.07	0.05
122	SLV 9	-15	1433	4365	-69.07	-12.22	-0.03
122	SLV 10	-15	1433	4365	-69.07	-12.22	-0.03
122	SLV 11	3	-2184	3969	103.19	2.87	0.01
122	SLV 12	3	-2184	3969	103.19	2.87	0.01
122	SLV 13	-32	-159	3444	6.92	-25.84	-0.07
122	SLV 14	-32	-159	3444	6.92	-25.84	-0.07
122	SLV 15	-27	-1244	3325	58.6	-21.31	-0.06
122	SLV 16	-27	-1244	3325	58.6	-21.31	-0.06
123	SLU 1	4	-22	676	0.75	2.4	0.02
123	SLU 2	4	-21	676	0.74	2.57	0.02
123	SLU 3	4	-23	679	0.79	2.46	0.02
123	SLU 4	4	-22	679	0.79	2.56	0.02
123	SLU 5	4	-22	677	0.77	2.61	0.02
123	SLU 6	4	-23	681	0.82	2.5	0.02
123	SLU 7	4	-23	681	0.81	2.6	0.02
123	SLU 8	4	-23	680	0.81	2.48	0.02
123	SLU 9	4	-23	680	0.8	2.58	0.02
123	SLU 10	5	-23	807	0.84	3.08	0.03
123	SLU 11	5	-25	811	0.89	2.97	0.03
123	SLU 12	5	-25	810	0.88	3.08	0.03
123	SLU 13	5	-24	809	0.86	3.12	0.03
123	SLU 14	5	-26	813	0.92	3.01	0.03
123	SLU 15	5	-25	812	0.91	3.12	0.03
123	SLU 16	5	-25	812	0.9	3	0.03
123	SLU 17	5	-25	811	0.9	3.1	0.03
123	SLU 18	5	-25	864	0.89	3.14	0.03
123	SLU 19	5	-24	863	0.89	3.24	0.03
123	SLU 20	5	-25	866	0.92	3.18	0.03
123	SLU 21	5	-25	865	0.91	3.28	0.03
123	SLU 22	4	-26	720	0.9	2.76	0.02
123	SLU 23	4	-25	720	0.89	2.92	0.02
123	SLU 24	4	-27	723	0.94	2.82	0.02
123	SLU 25	4	-27	723	0.93	2.92	0.02
123	SLU 26	4	-26	721	0.91	2.96	0.02
123	SLU 27	4	-28	725	0.97	2.86	0.02
123	SLU 28	4	-27	725	0.96	2.96	0.02
123	SLU 29	4	-27	724	0.95	2.84	0.02
123	SLU 30	4	-27	724	0.95	2.94	0.02
123	SLU 31	5	-28	851	0.99	3.44	0.03
123	SLU 32	5	-29	855	1.04	3.33	0.03
123	SLU 33	5	-29	854	1.03	3.43	0.03
123	SLU 34	5	-28	853	1.01	3.48	0.03
123	SLU 35	5	-30	857	1.07	3.37	0.03
123	SLU 36	5	-30	856	1.06	3.47	0.03
123	SLU 37	5	-30	856	1.05	3.35	0.03
123	SLU 38	5	-29	855	1.04	3.45	0.03
123	SLU 39	5	-29	908	1.04	3.49	0.03
123	SLU 40	6	-29	907	1.03	3.59	0.03
123	SLU 41	5	-30	910	1.07	3.53	0.03
123	SLU 42	6	-29	909	1.06	3.63	0.03
123	SLU 43	4	-27	864	0.93	3	0.02
123	SLU 44	5	-26	863	0.92	3.17	0.03
123	SLU 45	5	-28	867	0.97	3.06	0.03
123	SLU 46	5	-27	867	0.96	3.16	0.03
123	SLU 47	5	-27	865	0.94	3.21	0.03
123	SLU 48	5	-28	869	1	3.1	0.03
123	SLU 49	5	-28	869	0.99	3.2	0.03
123	SLU 50	5	-28	868	0.98	3.08	0.03
123	SLU 51	5	-28	868	0.97	3.18	0.03
123	SLU 52	6	-28	995	1.01	3.68	0.03
123	SLU 53	5	-30	998	1.07	3.58	0.03
123	SLU 54	6	-30	998	1.06	3.68	0.03
123	SLU 55	6	-29	997	1.04	3.72	0.03
123	SLU 56	5	-31	1000	1.09	3.61	0.03
123	SLU 57	6	-30	1000	1.09	3.72	0.03
123	SLU 58	5	-30	999	1.08	3.6	0.03
123	SLU 59	6	-30	999	1.07	3.7	0.03
123	SLU 60	6	-30	1052	1.07	3.74	0.03
123	SLU 61	6	-29	1051	1.06	3.84	0.03
123	SLU 62	6	-31	1054	1.1	3.78	0.03
123	SLU 63	6	-30	1053	1.09	3.88	0.03
123	SLU 64	5	-31	908	1.08	3.36	0.03

Nodo	Cont.	Reazione a traslazione			Reazione a rotazione		
Ind.	N.br.	x	y	z	x	y	z
123	SLU 65	5	-30	907	1.06	3.52	0.03
123	SLU 66	5	-32	911	1.12	3.42	0.03
123	SLU 67	5	-32	911	1.11	3.52	0.03
123	SLU 68	5	-31	909	1.09	3.56	0.03
123	SLU 69	5	-33	913	1.14	3.46	0.03
123	SLU 70	5	-32	913	1.14	3.56	0.03
123	SLU 71	5	-32	912	1.13	3.44	0.03
123	SLU 72	5	-32	912	1.12	3.54	0.03
123	SLU 73	6	-33	1039	1.16	4.04	0.03
123	SLU 74	6	-34	1042	1.21	3.93	0.03
123	SLU 75	6	-34	1042	1.21	4.03	0.03
123	SLU 76	6	-33	1041	1.19	4.08	0.03
123	SLU 77	6	-35	1044	1.24	3.97	0.03
123	SLU 78	6	-35	1044	1.23	4.07	0.03
123	SLU 79	6	-35	1043	1.23	3.95	0.03
123	SLU 80	6	-34	1043	1.22	4.05	0.03
123	SLU 81	6	-34	1096	1.22	4.09	0.04
123	SLU 82	6	-34	1095	1.21	4.19	0.04
123	SLU 83	6	-35	1098	1.24	4.13	0.04
123	SLU 84	6	-34	1097	1.24	4.23	0.04
123	SLE RA 1	4	-23	689	0.8	2.5	0.02
123	SLE RA 2	4	-22	688	0.79	2.62	0.02
123	SLE RA 3	4	-23	691	0.82	2.54	0.02
123	SLE RA 4	4	-23	691	0.82	2.61	0.02
123	SLE RA 5	4	-23	690	0.81	2.64	0.02
123	SLE RA 6	4	-24	692	0.84	2.57	0.02
123	SLE RA 7	4	-24	692	0.83	2.64	0.02
123	SLE RA 8	4	-24	692	0.83	2.56	0.02
123	SLE RA 9	4	-24	691	0.83	2.62	0.02
123	SLE RA 10	4	-24	776	0.85	2.96	0.02
123	SLE RA 11	4	-25	778	0.89	2.89	0.02
123	SLE RA 12	4	-25	778	0.88	2.95	0.02
123	SLE RA 13	4	-24	777	0.87	2.98	0.03
123	SLE RA 14	4	-25	780	0.91	2.91	0.02
123	SLE RA 15	4	-25	779	0.9	2.98	0.03
123	SLE RA 16	4	-25	779	0.9	2.9	0.02
123	SLE RA 17	4	-25	779	0.89	2.97	0.03
123	SLE RA 18	5	-25	814	0.89	2.99	0.03
123	SLE RA 19	5	-25	814	0.88	3.06	0.03
123	SLE RA 20	5	-25	815	0.91	3.02	0.03
123	SLE RA 21	5	-25	815	0.9	3.09	0.03
123	SLE FR 1	4	-23	689	0.8	2.5	0.02
123	SLE FR 2	4	-23	689	0.8	2.53	0.02
123	SLE FR 3	4	-23	690	0.8	2.52	0.02
123	SLE FR 4	4	-23	726	0.82	2.67	0.02
123	SLE FR 5	4	-24	727	0.83	2.66	0.02
123	SLE FR 6	4	-24	752	0.84	2.75	0.02
123	SLE QP 1	4	-23	689	0.8	2.5	0.02
123	SLE QP 2	4	-23	727	0.82	2.65	0.02
123	SLD 1	16	60	698	-1.44	12.76	0.09
123	SLD 2	16	60	698	-1.44	12.76	0.09
123	SLD 3	18	-72	733	2.16	14.48	0.1
123	SLD 4	18	-72	733	2.16	14.48	0.1
123	SLD 5	4	203	664	-5.31	3.08	0.02
123	SLD 6	4	203	664	-5.31	3.08	0.02
123	SLD 7	11	-240	783	6.68	8.8	0.06
123	SLD 8	11	-240	783	6.68	8.8	0.06
123	SLD 9	-3	193	670	-5.03	-3.5	-0.02
123	SLD 10	-3	193	670	-5.03	-3.5	-0.02
123	SLD 11	4	-250	789	6.96	2.22	0.02
123	SLD 12	4	-250	789	6.96	2.22	0.02
123	SLD 13	-10	26	720	-0.51	-9.17	-0.05
123	SLD 14	-10	26	720	-0.51	-9.17	-0.05
123	SLD 15	-8	-107	755	3.09	-7.46	-0.04
123	SLD 16	-8	-107	755	3.09	-7.46	-0.04
123	SLV 1	32	174	658	-4.49	26.84	0.17
123	SLV 2	32	174	658	-4.49	26.84	0.17
123	SLV 3	37	-137	742	3.92	31.05	0.2
123	SLV 4	37	-137	742	3.92	31.05	0.2
123	SLV 5	5	507	579	-13.54	3.53	0.03
123	SLV 6	5	507	579	-13.54	3.53	0.03
123	SLV 7	22	-529	858	14.52	17.55	0.12
123	SLV 8	22	-529	858	14.52	17.55	0.12
123	SLV 9	-14	482	595	-12.87	-12.25	-0.07
123	SLV 10	-14	482	595	-12.87	-12.25	-0.07
123	SLV 11	3	-554	874	15.19	1.77	0.02
123	SLV 12	3	-554	874	15.19	1.77	0.02
123	SLV 13	-29	91	711	-2.27	-25.75	-0.16
123	SLV 14	-29	91	711	-2.27	-25.75	-0.16
123	SLV 15	-24	-220	795	6.14	-21.54	-0.13
123	SLV 16	-24	-220	795	6.14	-21.54	-0.13
124	SLU 1	0	-133	4002	12.39	-0.56	0
124	SLU 2	0	141	4053	-0.1	0.08	0
124	SLU 3	0	-134	4114	12.63	-0.57	0
124	SLU 4	0	31	4145	5.13	-0.19	0
124	SLU 5	0	142	4125	0	0.07	0
124	SLU 6	0	-133	4186	12.72	-0.58	0
124	SLU 7	0	32	4217	5.23	-0.2	0
124	SLU 8	0	-132	4146	12.59	-0.58	0
124	SLU 9	0	33	4177	5.1	-0.2	0
124	SLU 10	0	125	4605	1.65	0	0

Nodo	Cont.	Reazione a traslazione			Reazione a rotazione		
Ind.	N.br.	x	y	z	x	y	z
124	SLU 11	-1	-150	4666	14.38	-0.66	0
124	SLU 12	0	14	4696	6.88	-0.27	0
124	SLU 13	0	126	4677	1.75	-0.01	0
124	SLU 14	-1	-150	4738	14.48	-0.67	0
124	SLU 15	0	15	4768	6.98	-0.28	0
124	SLU 16	-1	-148	4698	14.34	-0.66	0
124	SLU 17	0	17	4728	6.85	-0.28	0
124	SLU 18	-1	-157	4790	14.89	-0.67	0
124	SLU 19	0	8	4821	7.4	-0.29	0
124	SLU 20	-1	-156	4862	14.99	-0.68	0
124	SLU 21	0	9	4893	7.5	-0.3	0
124	SLU 22	-1	-146	4521	13.92	-0.63	0
124	SLU 23	0	128	4572	1.43	0	0
124	SLU 24	-1	-147	4633	14.15	-0.65	0
124	SLU 25	0	18	4664	6.66	-0.27	0
124	SLU 26	0	129	4644	1.53	-0.01	0
124	SLU 27	-1	-146	4705	14.25	-0.66	0
124	SLU 28	0	18	4736	6.76	-0.28	0
124	SLU 29	-1	-145	4665	14.12	-0.65	0
124	SLU 30	0	20	4696	6.62	-0.27	0
124	SLU 31	0	112	5124	3.18	-0.08	0
124	SLU 32	-1	-164	5185	15.9	-0.73	0
124	SLU 33	0	1	5215	8.41	-0.35	0
124	SLU 34	0	112	5196	3.28	-0.09	0
124	SLU 35	-1	-163	5257	16	-0.74	0
124	SLU 36	0	2	5287	8.51	-0.36	0
124	SLU 37	-1	-161	5217	15.87	-0.74	0
124	SLU 38	0	3	5247	8.37	-0.35	0
124	SLU 39	-1	-170	5309	16.42	-0.75	0
124	SLU 40	0	-5	5340	8.93	-0.37	0
124	SLU 41	-1	-169	5381	16.52	-0.76	0
124	SLU 42	0	-4	5412	9.02	-0.38	0
124	SLU 43	-1	-169	5025	15.58	-0.7	0
124	SLU 44	0	106	5076	3.09	-0.06	0
124	SLU 45	-1	-169	5137	15.82	-0.71	0
124	SLU 46	0	-5	5167	8.33	-0.33	0
124	SLU 47	0	107	5148	3.19	-0.07	0
124	SLU 48	-1	-169	5209	15.92	-0.72	0
124	SLU 49	0	-4	5239	8.42	-0.34	0
124	SLU 50	-1	-167	5169	15.78	-0.72	0
124	SLU 51	0	-2	5200	8.29	-0.34	0
124	SLU 52	0	89	5627	4.84	-0.14	0
124	SLU 53	-1	-186	5688	17.57	-0.8	0
124	SLU 54	0	-21	5719	10.08	-0.41	0
124	SLU 55	0	90	5699	4.94	-0.15	0
124	SLU 56	-1	-185	5760	17.67	-0.81	0
124	SLU 57	0	-20	5791	10.18	-0.42	0
124	SLU 58	-1	-184	5721	17.53	-0.8	0
124	SLU 59	0	-19	5751	10.04	-0.42	0
124	SLU 60	-1	-192	5813	18.08	-0.82	0
124	SLU 61	0	-27	5843	10.59	-0.43	0
124	SLU 62	-1	-191	5885	18.18	-0.83	0
124	SLU 63	0	-27	5915	10.69	-0.44	0
124	SLU 64	-1	-182	5544	17.11	-0.78	0
124	SLU 65	0	93	5595	4.62	-0.14	0
124	SLU 66	-1	-183	5656	17.35	-0.79	0
124	SLU 67	0	-18	5686	9.85	-0.41	0
124	SLU 68	0	93	5667	4.72	-0.15	0
124	SLU 69	-1	-182	5728	17.45	-0.8	0
124	SLU 70	0	-17	5758	9.95	-0.42	0
124	SLU 71	-1	-180	5688	17.31	-0.8	0
124	SLU 72	0	-16	5719	9.82	-0.41	0
124	SLU 73	0	76	6146	6.37	-0.22	0
124	SLU 74	-1	-199	6207	19.1	-0.87	0
124	SLU 75	0	-34	6238	11.6	-0.49	0
124	SLU 76	0	77	6218	6.47	-0.23	0
124	SLU 77	-1	-198	6279	19.2	-0.88	0
124	SLU 78	0	-34	6310	11.7	-0.5	0
124	SLU 79	-1	-197	6240	19.06	-0.88	0
124	SLU 80	0	-32	6270	11.57	-0.5	0
124	SLU 81	-1	-205	6332	19.61	-0.89	0
124	SLU 82	0	-41	6362	12.12	-0.51	0
124	SLU 83	-1	-205	6404	19.71	-0.9	0
124	SLU 84	0	-40	6434	12.22	-0.52	0
124	SLE RA 1	0	-137	4151	12.83	-0.58	0
124	SLE RA 2	0	46	4185	4.5	-0.16	0
124	SLE RA 3	0	-137	4225	12.98	-0.59	0
124	SLE RA 4	0	-28	4246	7.99	-0.34	0
124	SLE RA 5	0	47	4233	4.57	-0.16	0
124	SLE RA 6	0	-137	4273	13.05	-0.6	0
124	SLE RA 7	0	-27	4294	8.05	-0.34	0
124	SLE RA 8	0	-136	4247	12.96	-0.59	0
124	SLE RA 9	0	-26	4267	7.96	-0.34	0
124	SLE RA 10	0	35	4552	5.67	-0.21	0
124	SLE RA 11	-1	-148	4593	14.15	-0.65	0
124	SLE RA 12	0	-39	4613	9.16	-0.39	0
124	SLE RA 13	0	36	4600	5.73	-0.22	0
124	SLE RA 14	-1	-148	4641	14.22	-0.65	0
124	SLE RA 15	0	-38	4661	9.22	-0.4	0
124	SLE RA 16	-1	-147	4614	14.13	-0.65	0
124	SLE RA 17	0	-37	4635	9.13	-0.39	0

Nodo	Cont.	Reazione a traslazione			Reazione a rotazione		
Ind.	N.br.	x	y	z	x	y	z
124	SLE RA 18	-1	-153	4676	14.49	-0.66	0
124	SLE RA 19	0	-43	4696	9.5	-0.4	0
124	SLE RA 20	-1	-152	4724	14.56	-0.66	0
124	SLE RA 21	0	-42	4744	9.56	-0.41	0
124	SLE FR 1	0	-137	4151	12.83	-0.58	0
124	SLE FR 2	0	-100	4157	11.16	-0.49	0
124	SLE FR 3	0	-137	4170	12.85	-0.58	0
124	SLE FR 4	0	-105	4315	11.66	-0.52	0
124	SLE FR 5	0	-141	4327	13.35	-0.61	0
124	SLE FR 6	-1	-145	4413	13.66	-0.62	0
124	SLE QP 1	0	-137	4151	12.83	-0.58	0
124	SLE QP 2	0	-142	4308	13.33	-0.6	0
124	SLD 1	10	-158	4358	14.01	8.97	0
124	SLD 2	10	-158	4358	14.01	8.97	0
124	SLD 3	6	-557	4053	31.66	5.43	0
124	SLD 4	6	-557	4053	31.66	5.43	0
124	SLD 5	8	459	4786	-13.25	7.64	0
124	SLD 6	8	459	4786	-13.25	7.64	0
124	SLD 7	-4	-872	3768	45.61	-4.17	0
124	SLD 8	-4	-872	3768	45.61	-4.17	0
124	SLD 9	3	588	4848	-18.96	2.96	0
124	SLD 10	3	588	4848	-18.96	2.96	0
124	SLD 11	-9	-742	3830	39.9	-8.85	0
124	SLD 12	-9	-742	3830	39.9	-8.85	0
124	SLD 13	-7	274	4564	-5.01	-6.63	0
124	SLD 14	-7	274	4564	-5.01	-6.63	0
124	SLD 15	-11	-126	4258	12.65	-10.18	0
124	SLD 16	-11	-126	4258	12.65	-10.18	0
124	SLV 1	24	-188	4418	15.29	23.27	0.01
124	SLV 2	24	-188	4418	15.29	23.27	0.01
124	SLV 3	16	-1125	3704	56.77	14.25	0.01
124	SLV 4	16	-1125	3704	56.77	14.25	0.01
124	SLV 5	20	1266	5425	-49	20.24	0.01
124	SLV 6	20	1266	5425	-49	20.24	0.01
124	SLV 7	-9	-1858	3043	89.28	-9.83	0
124	SLV 8	-9	-1858	3043	89.28	-9.83	0
124	SLV 9	8	1575	5574	-62.62	8.62	0
124	SLV 10	8	1575	5574	-62.62	8.62	0
124	SLV 11	-21	-1549	3191	75.66	-21.45	-0.01
124	SLV 12	-21	-1549	3191	75.66	-21.45	-0.01
124	SLV 13	-17	842	4913	-30.12	-15.46	-0.01
124	SLV 14	-17	842	4913	-30.12	-15.46	-0.01
124	SLV 15	-25	-96	4198	11.37	-24.48	-0.01
124	SLV 16	-25	-96	4198	11.37	-24.48	-0.01
125	SLU 1	14	367	5260	-14.5	11.99	0
125	SLU 2	7	416	5256	-16.84	4.66	0
125	SLU 3	15	378	5413	-14.89	12.39	0
125	SLU 4	11	407	5411	-16.3	7.99	0
125	SLU 5	8	420	5355	-16.97	4.92	0
125	SLU 6	15	381	5512	-15.02	12.65	0
125	SLU 7	11	410	5510	-16.43	8.25	0
125	SLU 8	15	375	5458	-14.76	12.51	0
125	SLU 9	11	404	5456	-16.17	8.11	0
125	SLU 10	9	464	5858	-18.75	6.3	0
125	SLU 11	17	425	6014	-16.8	14.03	0
125	SLU 12	13	454	6012	-18.21	9.63	0
125	SLU 13	10	467	5957	-18.88	6.56	0
125	SLU 14	17	429	6113	-16.93	14.29	0
125	SLU 15	13	458	6111	-18.34	9.89	0
125	SLU 16	17	423	6060	-16.67	14.15	0
125	SLU 17	13	452	6057	-18.08	9.75	0
125	SLU 18	17	436	6119	-17.23	14.33	0
125	SLU 19	13	465	6117	-18.63	9.93	0
125	SLU 20	17	439	6218	-17.36	14.59	0
125	SLU 21	13	468	6216	-18.77	10.19	0
125	SLU 22	16	415	5845	-16.38	13.57	0
125	SLU 23	9	463	5841	-18.72	6.24	0
125	SLU 24	17	425	5998	-16.77	13.97	0
125	SLU 25	13	454	5995	-18.17	9.57	0
125	SLU 26	10	467	5940	-18.85	6.5	0
125	SLU 27	17	429	6097	-16.9	14.23	0
125	SLU 28	13	458	6094	-18.31	9.83	0
125	SLU 29	17	422	6043	-16.64	14.09	0
125	SLU 30	13	451	6041	-18.05	9.69	0
125	SLU 31	11	511	6442	-20.63	7.88	0
125	SLU 32	18	473	6599	-18.68	15.61	0
125	SLU 33	14	502	6597	-20.08	11.21	0
125	SLU 34	12	515	6541	-20.76	8.14	0
125	SLU 35	19	477	6698	-18.81	15.87	0
125	SLU 36	15	506	6696	-20.22	11.47	0
125	SLU 37	19	470	6644	-18.55	15.73	0
125	SLU 38	15	499	6642	-19.96	11.33	0
125	SLU 39	19	483	6704	-19.11	15.91	0
125	SLU 40	15	512	6701	-20.51	11.52	0
125	SLU 41	19	487	6803	-19.24	16.17	0
125	SLU 42	15	516	6800	-20.64	11.77	0
125	SLU 43	18	461	6638	-18.21	15.04	0
125	SLU 44	11	510	6634	-20.55	7.71	0
125	SLU 45	18	471	6791	-18.6	15.44	0
125	SLU 46	14	501	6788	-20	11.05	0
125	SLU 47	11	513	6733	-20.68	7.97	0

Nodo	Cont.	Reazione a traslazione			Reazione a rotazione		
Ind.	N.br.	x	y	z	x	y	z
125	SLU 48	19	475	6890	-18.73	15.7	0
125	SLU 49	15	504	6887	-20.13	11.3	0
125	SLU 50	18	469	6836	-18.47	15.56	0
125	SLU 51	14	498	6834	-19.87	11.16	0
125	SLU 52	13	558	7235	-22.46	9.35	0
125	SLU 53	20	519	7392	-20.51	17.08	0
125	SLU 54	16	548	7390	-21.91	12.69	0
125	SLU 55	13	561	7334	-22.59	9.61	0
125	SLU 56	21	523	7491	-20.64	17.34	0
125	SLU 57	17	552	7489	-22.04	12.94	0
125	SLU 58	20	517	7437	-20.38	17.2	0
125	SLU 59	16	546	7435	-21.78	12.8	0
125	SLU 60	21	530	7497	-20.94	17.39	0
125	SLU 61	17	559	7494	-22.34	12.99	0
125	SLU 62	21	533	7596	-21.07	17.64	0
125	SLU 63	17	562	7593	-22.47	13.25	0
125	SLU 64	20	509	7222	-20.08	16.62	0
125	SLU 65	13	557	7218	-22.43	9.3	0
125	SLU 66	20	519	7375	-20.48	17.02	0
125	SLU 67	16	548	7373	-21.88	12.63	0
125	SLU 68	13	561	7318	-22.56	9.55	0
125	SLU 69	21	523	7474	-20.61	17.28	0
125	SLU 70	16	552	7472	-22.01	12.89	0
125	SLU 71	20	516	7421	-20.35	17.14	0
125	SLU 72	16	545	7418	-21.75	12.75	0
125	SLU 73	15	605	7820	-24.34	10.94	0
125	SLU 74	22	567	7976	-22.39	18.66	0
125	SLU 75	18	596	7974	-23.79	14.27	0
125	SLU 76	15	609	7919	-24.47	11.19	0
125	SLU 77	22	570	8076	-22.52	18.92	0
125	SLU 78	18	600	8073	-23.92	14.53	0
125	SLU 79	22	564	8022	-22.26	18.78	0
125	SLU 80	18	593	8019	-23.66	14.38	0
125	SLU 81	22	577	8081	-22.81	18.97	0
125	SLU 82	18	606	8079	-24.22	14.57	0
125	SLU 83	23	581	8180	-22.94	19.23	0
125	SLU 84	19	610	8178	-24.35	14.83	0
125	SLE RA 1	15	381	5427	-15.04	12.44	0
125	SLE RA 2	10	413	5425	-16.6	7.55	0
125	SLE RA 3	15	388	5529	-15.3	12.71	0
125	SLE RA 4	12	407	5528	-16.23	9.78	0
125	SLE RA 5	10	416	5491	-16.69	7.73	0
125	SLE RA 6	15	390	5595	-15.39	12.88	0
125	SLE RA 7	13	410	5594	-16.32	9.95	0
125	SLE RA 8	15	386	5559	-15.21	12.79	0
125	SLE RA 9	12	405	5558	-16.15	9.85	0
125	SLE RA 10	12	445	5825	-17.87	8.65	0
125	SLE RA 11	16	420	5930	-16.57	13.8	0
125	SLE RA 12	14	439	5928	-17.51	10.87	0
125	SLE RA 13	12	448	5891	-17.96	8.82	0
125	SLE RA 14	17	422	5996	-16.66	13.97	0
125	SLE RA 15	14	441	5994	-17.6	11.04	0
125	SLE RA 16	16	418	5960	-16.49	13.88	0
125	SLE RA 17	14	437	5959	-17.42	10.95	0
125	SLE RA 18	17	426	6000	-16.86	14	0
125	SLE RA 19	14	446	5998	-17.79	11.07	0
125	SLE RA 20	17	429	6066	-16.94	14.17	0
125	SLE RA 21	14	448	6064	-17.88	11.24	0
125	SLE FR 1	15	381	5427	-15.04	12.44	0
125	SLE FR 2	14	387	5427	-15.35	11.46	0
125	SLE FR 3	15	382	5454	-15.07	12.51	0
125	SLE FR 4	14	401	5598	-15.9	11.93	0
125	SLE FR 5	15	395	5625	-15.62	12.98	0
125	SLE FR 6	16	404	5713	-15.95	13.22	0
125	SLE QP 1	15	381	5427	-15.04	12.44	0
125	SLE QP 2	15	394	5599	-15.58	12.91	0
125	SLD 1	39	728	7290	-29.8	34.44	-0.01
125	SLD 2	39	728	7290	-29.8	34.44	-0.01
125	SLD 3	32	209	6780	-7.58	27.49	-0.01
125	SLD 4	32	209	6780	-7.58	27.49	-0.01
125	SLD 5	33	1283	6880	-53.54	29.91	-0.01
125	SLD 6	33	1283	6880	-53.54	29.91	-0.01
125	SLD 7	9	-449	5179	20.51	6.74	0
125	SLD 8	9	-449	5179	20.51	6.74	0
125	SLD 9	21	1238	6019	-51.68	19.08	0
125	SLD 10	21	1238	6019	-51.68	19.08	0
125	SLD 11	-2	-494	4318	22.38	-4.1	0
125	SLD 12	-2	-494	4318	22.38	-4.1	0
125	SLD 13	-1	580	4418	-23.58	-1.67	0
125	SLD 14	-1	580	4418	-23.58	-1.67	0
125	SLD 15	-8	61	3908	-1.37	-8.62	0.01
125	SLD 16	-8	61	3908	-1.37	-8.62	0.01
125	SLV 1	71	1182	9534	-49.11	64.26	-0.02
125	SLV 2	71	1182	9534	-49.11	64.26	-0.02
125	SLV 3	53	-31	8341	2.77	46.71	-0.02
125	SLV 4	53	-31	8341	2.77	46.71	-0.02
125	SLV 5	59	2472	8589	-104.33	54.93	-0.02
125	SLV 6	59	2472	8589	-104.33	54.93	-0.02
125	SLV 7	0	-1574	4613	68.61	-3.57	0
125	SLV 8	0	-1574	4613	68.61	-3.57	0
125	SLV 9	31	2363	6585	-99.78	29.39	-0.01

Nodo	Cont.	Reazione a traslazione			Reazione a rotazione		
Ind.	N.br.	x	y	z	x	y	z
125	SLV 10	31	2363	6585	-99.78	29.39	-0.01
125	SLV 11	-28	-1683	2609	73.16	-29.12	0.01
125	SLV 12	-28	-1683	2609	73.16	-29.12	0.01
125	SLV 13	-22	820	2857	-33.94	-20.89	0.01
125	SLV 14	-22	820	2857	-33.94	-20.89	0.01
125	SLV 15	-40	-394	1664	17.94	-38.44	0.02
125	SLV 16	-40	-394	1664	17.94	-38.44	0.02
126	SLU 1	0	23	3596	-0.91	0.45	0
126	SLU 2	-2	272	3544	-12.52	-1.7	0
126	SLU 3	0	26	3698	-1.02	0.47	0
126	SLU 4	-1	175	3667	-7.98	-0.82	0
126	SLU 5	-2	275	3610	-12.6	-1.69	0
126	SLU 6	0	28	3764	-1.1	0.49	0
126	SLU 7	-1	178	3734	-8.06	-0.81	0
126	SLU 8	0	27	3728	-1.08	0.48	0
126	SLU 9	-1	177	3697	-8.04	-0.82	0
126	SLU 10	-2	279	4069	-12.7	-1.63	0
126	SLU 11	0	32	4223	-1.2	0.55	0
126	SLU 12	-1	182	4192	-8.16	-0.74	0
126	SLU 13	-2	281	4135	-12.79	-1.62	0
126	SLU 14	0	34	4289	-1.29	0.56	0
126	SLU 15	-1	184	4258	-8.25	-0.73	0
126	SLU 16	0	34	4253	-1.27	0.55	0
126	SLU 17	-1	183	4222	-8.23	-0.74	0
126	SLU 18	0	32	4345	-1.18	0.56	0
126	SLU 19	-1	182	4314	-8.14	-0.73	0
126	SLU 20	0	34	4411	-1.26	0.57	0
126	SLU 21	-1	184	4380	-8.22	-0.72	0
126	SLU 22	0	30	4086	-1.12	0.53	0
126	SLU 23	-2	279	4034	-12.72	-1.62	0
126	SLU 24	0	33	4188	-1.22	0.55	0
126	SLU 25	-1	182	4157	-8.19	-0.74	0
126	SLU 26	-2	282	4100	-12.81	-1.61	0
126	SLU 27	0	35	4254	-1.31	0.57	0
126	SLU 28	-1	185	4224	-8.27	-0.73	0
126	SLU 29	0	34	4218	-1.29	0.55	0
126	SLU 30	-1	184	4187	-8.25	-0.74	0
126	SLU 31	-2	286	4559	-12.91	-1.55	0
126	SLU 32	1	39	4713	-1.41	0.63	0
126	SLU 33	-1	189	4682	-8.37	-0.66	0
126	SLU 34	-2	288	4625	-12.99	-1.54	0
126	SLU 35	1	41	4779	-1.49	0.64	0
126	SLU 36	-1	191	4748	-8.46	-0.65	0
126	SLU 37	1	41	4743	-1.47	0.63	0
126	SLU 38	-1	190	4712	-8.44	-0.66	0
126	SLU 39	1	39	4835	-1.38	0.64	0
126	SLU 40	-1	189	4804	-8.35	-0.65	0
126	SLU 41	1	41	4901	-1.47	0.65	0
126	SLU 42	-1	191	4871	-8.43	-0.64	0
126	SLU 43	0	27	4506	-1.12	0.56	0
126	SLU 44	-2	277	4455	-12.72	-1.6	0
126	SLU 45	0	30	4609	-1.22	0.58	0
126	SLU 46	-1	180	4578	-8.18	-0.71	0
126	SLU 47	-2	279	4521	-12.8	-1.58	0
126	SLU 48	0	33	4675	-1.3	0.59	0
126	SLU 49	-1	182	4644	-8.27	-0.7	0
126	SLU 50	0	32	4639	-1.29	0.58	0
126	SLU 51	-1	181	4608	-8.25	-0.71	0
126	SLU 52	-2	283	4980	-12.9	-1.52	0
126	SLU 53	1	37	5134	-1.41	0.66	0
126	SLU 54	-1	186	5103	-8.37	-0.63	0
126	SLU 55	-2	285	5046	-12.99	-1.51	0
126	SLU 56	1	39	5200	-1.49	0.67	0
126	SLU 57	-1	189	5169	-8.45	-0.62	0
126	SLU 58	1	38	5163	-1.47	0.66	0
126	SLU 59	-1	188	5132	-8.43	-0.63	0
126	SLU 60	1	37	5256	-1.38	0.67	0
126	SLU 61	-1	186	5225	-8.34	-0.62	0
126	SLU 62	1	39	5322	-1.47	0.68	0
126	SLU 63	-1	188	5291	-8.43	-0.61	0
126	SLU 64	1	34	4996	-1.32	0.64	0
126	SLU 65	-2	284	4945	-12.93	-1.52	0
126	SLU 66	1	37	5099	-1.43	0.66	0
126	SLU 67	-1	187	5068	-8.39	-0.63	0
126	SLU 68	-2	286	5011	-13.01	-1.5	0
126	SLU 69	1	40	5165	-1.51	0.67	0
126	SLU 70	-1	189	5134	-8.47	-0.62	0
126	SLU 71	1	39	5129	-1.49	0.66	0
126	SLU 72	-1	188	5098	-8.45	-0.63	0
126	SLU 73	-1	290	5470	-13.11	-1.44	0
126	SLU 74	1	44	5624	-1.61	0.74	0
126	SLU 75	-1	193	5593	-8.57	-0.55	0
126	SLU 76	-1	292	5536	-13.2	-1.43	0
126	SLU 77	1	46	5690	-1.7	0.75	0
126	SLU 78	-1	196	5659	-8.66	-0.54	0
126	SLU 79	1	45	5653	-1.68	0.74	0
126	SLU 80	-1	195	5623	-8.64	-0.55	0
126	SLU 81	1	44	5746	-1.59	0.75	0
126	SLU 82	-1	193	5715	-8.55	-0.54	0
126	SLU 83	1	46	5812	-1.67	0.76	0
126	SLU 84	-1	195	5781	-8.63	-0.53	0

Nodo	Cont.	Reazione a traslazione			Reazione a rotazione		
Ind.	N.br.	x	y	z	x	y	z
126	SLE RA 1	0	25	3736	-0.97	0.48	0
126	SLE RA 2	-1	191	3701	-8.71	-0.96	0
126	SLE RA 3	0	27	3804	-1.04	0.49	0
126	SLE RA 4	0	127	3783	-5.68	-0.37	0
126	SLE RA 5	-1	193	3745	-8.76	-0.95	0
126	SLE RA 6	0	28	3848	-1.1	0.5	0
126	SLE RA 7	0	128	3828	-5.74	-0.37	0
126	SLE RA 8	0	28	3824	-1.09	0.49	0
126	SLE RA 9	0	128	3803	-5.73	-0.37	0
126	SLE RA 10	-1	195	4051	-8.83	-0.91	0
126	SLE RA 11	0	31	4154	-1.16	0.54	0
126	SLE RA 12	0	131	4133	-5.81	-0.32	0
126	SLE RA 13	-1	197	4095	-8.89	-0.9	0
126	SLE RA 14	0	33	4198	-1.22	0.55	0
126	SLE RA 15	0	132	4177	-5.86	-0.31	0
126	SLE RA 16	0	32	4174	-1.21	0.54	0
126	SLE RA 17	0	132	4153	-5.85	-0.32	0
126	SLE RA 18	0	31	4235	-1.15	0.55	0
126	SLE RA 19	0	131	4215	-5.79	-0.31	0
126	SLE RA 20	0	33	4279	-1.21	0.56	0
126	SLE RA 21	0	132	4259	-5.85	-0.31	0
126	SLE FR 1	0	25	3736	-0.97	0.48	0
126	SLE FR 2	0	58	3729	-2.52	0.19	0
126	SLE FR 3	0	26	3753	-0.99	0.48	0
126	SLE FR 4	0	60	3879	-2.57	0.21	0
126	SLE FR 5	0	27	3903	-1.05	0.5	0
126	SLE FR 6	0	28	3986	-1.06	0.51	0
126	SLE QP 1	0	25	3736	-0.97	0.48	0
126	SLE QP 2	0	27	3886	-1.03	0.5	0
126	SLD 1	5	437	4035	-19.95	4.81	0
126	SLD 2	5	437	4035	-19.95	4.81	0
126	SLD 3	7	-10	3887	0.93	7.09	0
126	SLD 4	7	-10	3887	0.93	7.09	0
126	SLD 5	-2	828	4155	-38.38	-1.68	0
126	SLD 6	-2	828	4155	-38.38	-1.68	0
126	SLD 7	6	-662	3661	31.24	5.94	0
126	SLD 8	6	-662	3661	31.24	5.94	0
126	SLD 9	-5	716	4110	-33.29	-4.95	0
126	SLD 10	-5	716	4110	-33.29	-4.95	0
126	SLD 11	2	-774	3616	36.33	2.67	0
126	SLD 12	2	-774	3616	36.33	2.67	0
126	SLD 13	-6	63	3884	-2.98	-6.1	0
126	SLD 14	-6	63	3884	-2.98	-6.1	0
126	SLD 15	-4	-384	3736	17.9	-3.81	0
126	SLD 16	-4	-384	3736	17.9	-3.81	0
126	SLV 1	11	1004	4233	-46.12	10.74	0
126	SLV 2	11	1004	4233	-46.12	10.74	0
126	SLV 3	17	-45	3884	2.89	16.58	0
126	SLV 4	17	-45	3884	2.89	16.58	0
126	SLV 5	-5	1910	4519	-88.88	-5.28	0
126	SLV 6	-5	1910	4519	-88.88	-5.28	0
126	SLV 7	14	-1585	3356	74.48	14.18	0
126	SLV 8	14	-1585	3356	74.48	14.18	0
126	SLV 9	-13	1639	4416	-76.53	-13.18	0.01
126	SLV 10	-13	1639	4416	-76.53	-13.18	0.01
126	SLV 11	6	-1857	3252	86.83	6.28	0
126	SLV 12	6	-1857	3252	86.83	6.28	0
126	SLV 13	-16	99	3887	-4.94	-15.59	0
126	SLV 14	-16	99	3887	-4.94	-15.59	0
126	SLV 15	-10	-950	3538	44.07	-9.75	0
126	SLV 16	-10	-950	3538	44.07	-9.75	0
127	SLU 1	0	467	1404	-16.4	-0.89	0
127	SLU 2	0	516	1431	-18.55	0.14	0
127	SLU 3	0	483	1426	-16.97	-0.92	0
127	SLU 4	0	513	1442	-18.26	-0.3	0
127	SLU 5	0	527	1446	-18.91	0.12	0
127	SLU 6	0	494	1441	-17.33	-0.95	0
127	SLU 7	0	524	1457	-18.62	-0.33	0
127	SLU 8	0	488	1433	-17.12	-0.94	0
127	SLU 9	0	518	1449	-18.41	-0.32	0
127	SLU 10	0	585	1522	-20.93	0.02	0
127	SLU 11	-1	552	1518	-19.35	-1.05	0
127	SLU 12	0	582	1534	-20.64	-0.43	0
127	SLU 13	0	596	1537	-21.29	-0.01	0
127	SLU 14	-1	563	1532	-19.71	-1.07	0
127	SLU 15	0	592	1548	-21	-0.45	0
127	SLU 16	-1	557	1525	-19.5	-1.06	0
127	SLU 17	0	586	1541	-20.79	-0.44	0
127	SLU 18	-1	565	1535	-19.8	-1.07	0
127	SLU 19	0	594	1551	-21.09	-0.45	0
127	SLU 20	-1	575	1549	-20.16	-1.09	0
127	SLU 21	0	605	1565	-21.45	-0.47	0
127	SLU 22	0	533	1492	-18.69	-1.01	0
127	SLU 23	0	582	1518	-20.84	0.02	0
127	SLU 24	-1	549	1514	-19.26	-1.04	0
127	SLU 25	0	579	1530	-20.55	-0.42	0
127	SLU 26	0	593	1533	-21.2	0	0
127	SLU 27	-1	560	1528	-19.62	-1.07	0
127	SLU 28	0	590	1544	-20.91	-0.45	0
127	SLU 29	-1	554	1521	-19.41	-1.06	0
127	SLU 30	0	584	1537	-20.7	-0.44	0

Nodo	Cont.	Reazione a traslazione			Reazione a rotazione		
Ind.	N.br.	x	y	z	x	y	z
127	SLU 31	0	651	1610	-23.23	-0.1	0
127	SLU 32	-1	618	1605	-21.64	-1.16	0
127	SLU 33	0	648	1621	-22.93	-0.55	0
127	SLU 34	0	661	1624	-23.59	-0.13	0
127	SLU 35	-1	628	1620	-22	-1.19	0
127	SLU 36	0	658	1636	-23.29	-0.57	0
127	SLU 37	-1	622	1612	-21.79	-1.18	0
127	SLU 38	0	652	1628	-23.08	-0.56	0
127	SLU 39	-1	631	1622	-22.09	-1.18	0
127	SLU 40	0	660	1638	-23.38	-0.57	0
127	SLU 41	-1	641	1637	-22.45	-1.21	0
127	SLU 42	0	671	1653	-23.74	-0.59	0
127	SLU 43	-1	584	1796	-20.53	-1.12	0
127	SLU 44	0	634	1822	-22.68	-0.09	0
127	SLU 45	-1	601	1818	-21.1	-1.15	0
127	SLU 46	0	631	1834	-22.39	-0.53	0
127	SLU 47	0	644	1837	-23.04	-0.11	0
127	SLU 48	-1	611	1832	-21.46	-1.17	0
127	SLU 49	0	641	1848	-22.75	-0.56	0
127	SLU 50	-1	605	1825	-21.25	-1.16	0
127	SLU 51	0	635	1841	-22.54	-0.55	0
127	SLU 52	0	702	1914	-25.07	-0.21	0
127	SLU 53	-1	669	1909	-23.48	-1.27	0
127	SLU 54	0	699	1925	-24.78	-0.65	0
127	SLU 55	0	713	1928	-25.43	-0.23	0
127	SLU 56	-1	680	1924	-23.84	-1.3	0
127	SLU 57	0	710	1940	-25.14	-0.68	0
127	SLU 58	-1	674	1916	-23.63	-1.29	0
127	SLU 59	0	704	1932	-24.93	-0.67	0
127	SLU 60	-1	682	1926	-23.93	-1.29	0
127	SLU 61	0	712	1942	-25.23	-0.67	0
127	SLU 62	-1	693	1941	-24.29	-1.32	0
127	SLU 63	0	723	1957	-25.59	-0.7	0
127	SLU 64	-1	650	1883	-22.82	-1.23	0
127	SLU 65	0	700	1910	-24.98	-0.2	0
127	SLU 66	-1	667	1905	-23.39	-1.27	0
127	SLU 67	0	697	1921	-24.69	-0.65	0
127	SLU 68	0	710	1924	-25.34	-0.23	0
127	SLU 69	-1	677	1920	-23.75	-1.29	0
127	SLU 70	0	707	1936	-25.05	-0.67	0
127	SLU 71	-1	671	1912	-23.54	-1.28	0
127	SLU 72	0	701	1928	-24.83	-0.67	0
127	SLU 73	0	768	2001	-27.36	-0.33	0
127	SLU 74	-1	735	1996	-25.78	-1.39	0
127	SLU 75	0	765	2013	-27.07	-0.77	0
127	SLU 76	0	779	2016	-27.72	-0.35	0
127	SLU 77	-1	746	2011	-26.14	-1.42	0
127	SLU 78	0	776	2027	-27.43	-0.8	0
127	SLU 79	-1	740	2003	-25.92	-1.41	0
127	SLU 80	0	770	2020	-27.22	-0.79	0
127	SLU 81	-1	748	2014	-26.23	-1.41	0
127	SLU 82	0	778	2030	-27.52	-0.79	0
127	SLU 83	-1	759	2028	-26.59	-1.43	0
127	SLU 84	0	788	2044	-27.88	-0.82	0
127	SLE RA 1	0	486	1429	-17.05	-0.92	0
127	SLE RA 2	0	519	1447	-18.49	-0.24	0
127	SLE RA 3	0	497	1444	-17.43	-0.95	0
127	SLE RA 4	0	517	1455	-18.29	-0.53	0
127	SLE RA 5	0	526	1457	-18.73	-0.25	0
127	SLE RA 6	0	504	1454	-17.67	-0.96	0
127	SLE RA 7	0	524	1464	-18.53	-0.55	0
127	SLE RA 8	0	500	1449	-17.53	-0.96	0
127	SLE RA 9	0	520	1459	-18.39	-0.54	0
127	SLE RA 10	0	564	1508	-20.08	-0.32	0
127	SLE RA 11	0	542	1505	-19.02	-1.03	0
127	SLE RA 12	0	562	1516	-19.88	-0.62	0
127	SLE RA 13	0	571	1518	-20.32	-0.34	0
127	SLE RA 14	-1	549	1515	-19.26	-1.04	0
127	SLE RA 15	0	569	1525	-20.12	-0.63	0
127	SLE RA 16	-1	545	1510	-19.12	-1.04	0
127	SLE RA 17	0	565	1520	-19.98	-0.63	0
127	SLE RA 18	-1	551	1516	-19.32	-1.04	0
127	SLE RA 19	0	571	1527	-20.18	-0.63	0
127	SLE RA 20	-1	558	1526	-19.56	-1.06	0
127	SLE RA 21	0	578	1537	-20.42	-0.64	0
127	SLE FR 1	0	486	1429	-17.05	-0.92	0
127	SLE FR 2	0	492	1433	-17.34	-0.79	0
127	SLE FR 3	0	488	1433	-17.15	-0.93	0
127	SLE FR 4	0	512	1459	-18.02	-0.82	0
127	SLE FR 5	0	508	1459	-17.83	-0.96	0
127	SLE FR 6	0	518	1473	-18.19	-0.98	0
127	SLE QP 1	0	486	1429	-17.05	-0.92	0
127	SLE QP 2	0	505	1455	-17.73	-0.96	0
127	SLD 1	11	550	1389	-20.41	24.42	0
127	SLD 2	11	550	1389	-20.41	24.42	0
127	SLD 3	15	129	1124	-2.82	31.35	0
127	SLD 4	15	129	1124	-2.82	31.35	0
127	SLD 5	-4	1157	1838	-45.21	-3.85	0
127	SLD 6	-4	1157	1838	-45.21	-3.85	0
127	SLD 7	11	-246	953	13.42	19.23	0
127	SLD 8	11	-246	953	13.42	19.23	0

Nodo	Cont.	Reazione a traslazione			Reazione a rotazione		
Ind.	N.br.	x	y	z	x	y	z
127	SLD 9	-12	1257	1958	-48.88	-21.15	0
127	SLD 10	-12	1257	1958	-48.88	-21.15	0
127	SLD 11	3	-147	1073	9.75	1.93	0
127	SLD 12	3	-147	1073	9.75	1.93	0
127	SLD 13	-16	882	1787	-32.64	-33.26	0
127	SLD 14	-16	882	1787	-32.64	-33.26	0
127	SLD 15	-12	461	1522	-15.05	-26.34	0
127	SLD 16	-12	461	1522	-15.05	-26.34	0
127	SLV 1	28	606	1302	-23.84	61.92	0.01
127	SLV 2	28	606	1302	-23.84	61.92	0.01
127	SLV 3	39	-377	682	17.21	79.53	0.01
127	SLV 4	39	-377	682	17.21	79.53	0.01
127	SLV 5	-9	2026	2350	-81.83	-8.8	0
127	SLV 6	-9	2026	2350	-81.83	-8.8	0
127	SLV 7	28	-1249	283	55.01	49.9	0
127	SLV 8	28	-1249	283	55.01	49.9	0
127	SLV 9	-29	2260	2628	-90.48	-51.81	0
127	SLV 10	-29	2260	2628	-90.48	-51.81	0
127	SLV 11	8	-1015	561	46.36	6.88	0
127	SLV 12	8	-1015	561	46.36	6.88	0
127	SLV 13	-40	1387	2229	-52.67	-81.45	-0.01
127	SLV 14	-40	1387	2229	-52.67	-81.45	-0.01
127	SLV 15	-29	405	1609	-11.62	-63.84	-0.01
127	SLV 16	-29	405	1609	-11.62	-63.84	-0.01
128	SLU 1	7	-256	4456	9.87	5.16	-0.01
128	SLU 2	7	-264	4427	10.19	5.12	-0.01
128	SLU 3	8	-258	4597	9.98	5.34	-0.01
128	SLU 4	8	-263	4580	10.17	5.32	-0.01
128	SLU 5	8	-265	4527	10.25	5.25	-0.01
128	SLU 6	8	-259	4697	10.04	5.47	-0.01
128	SLU 7	8	-264	4680	10.23	5.45	-0.01
128	SLU 8	8	-258	4656	9.99	5.42	-0.01
128	SLU 9	8	-263	4638	10.18	5.39	-0.01
128	SLU 10	9	-298	5109	11.64	5.97	-0.01
128	SLU 11	9	-292	5280	11.42	6.19	-0.01
128	SLU 12	9	-297	5262	11.61	6.16	-0.01
128	SLU 13	9	-299	5209	11.7	6.1	-0.01
128	SLU 14	9	-294	5380	11.48	6.32	-0.01
128	SLU 15	9	-298	5362	11.67	6.29	-0.01
128	SLU 16	9	-293	5339	11.43	6.26	-0.01
128	SLU 17	9	-297	5321	11.63	6.24	-0.01
128	SLU 18	9	-305	5431	11.93	6.37	-0.01
128	SLU 19	9	-309	5414	12.13	6.34	-0.01
128	SLU 20	9	-306	5531	11.99	6.5	-0.01
128	SLU 21	9	-311	5513	12.19	6.47	-0.01
128	SLU 22	9	-277	5035	10.79	5.86	-0.01
128	SLU 23	8	-285	5006	11.11	5.82	-0.01
128	SLU 24	9	-279	5176	10.9	6.04	-0.01
128	SLU 25	9	-284	5158	11.09	6.01	-0.01
128	SLU 26	9	-286	5105	11.17	5.95	-0.01
128	SLU 27	9	-281	5276	10.96	6.17	-0.01
128	SLU 28	9	-285	5258	11.15	6.14	-0.01
128	SLU 29	9	-280	5235	10.91	6.11	-0.01
128	SLU 30	9	-285	5217	11.1	6.09	-0.01
128	SLU 31	10	-319	5688	12.56	6.66	-0.01
128	SLU 32	10	-314	5859	12.34	6.88	-0.01
128	SLU 33	10	-318	5841	12.53	6.86	-0.01
128	SLU 34	10	-320	5788	12.62	6.79	-0.01
128	SLU 35	10	-315	5958	12.4	7.01	-0.01
128	SLU 36	10	-320	5941	12.59	6.99	-0.01
128	SLU 37	10	-314	5917	12.35	6.96	-0.01
128	SLU 38	10	-319	5900	12.55	6.94	-0.01
128	SLU 39	10	-326	6010	12.85	7.06	-0.01
128	SLU 40	10	-331	5992	13.04	7.04	-0.01
128	SLU 41	10	-327	6110	12.91	7.19	-0.01
128	SLU 42	10	-332	6092	13.1	7.17	-0.01
128	SLU 43	9	-325	5595	12.52	6.47	-0.01
128	SLU 44	9	-333	5565	12.84	6.43	-0.01
128	SLU 45	10	-327	5736	12.62	6.65	-0.01
128	SLU 46	10	-332	5718	12.82	6.63	-0.01
128	SLU 47	10	-334	5665	12.9	6.56	-0.01
128	SLU 48	10	-329	5836	12.68	6.78	-0.01
128	SLU 49	10	-333	5818	12.88	6.76	-0.01
128	SLU 50	10	-328	5795	12.64	6.73	-0.01
128	SLU 51	10	-333	5777	12.83	6.7	-0.01
128	SLU 52	11	-367	6248	14.28	7.28	-0.01
128	SLU 53	11	-362	6418	14.07	7.5	-0.02
128	SLU 54	11	-366	6401	14.26	7.47	-0.02
128	SLU 55	11	-369	6348	14.34	7.4	-0.01
128	SLU 56	11	-363	6518	14.13	7.62	-0.02
128	SLU 57	11	-368	6500	14.32	7.6	-0.02
128	SLU 58	11	-362	6477	14.08	7.57	-0.02
128	SLU 59	11	-367	6459	14.27	7.55	-0.02
128	SLU 60	11	-374	6570	14.58	7.68	-0.02
128	SLU 61	11	-379	6552	14.77	7.65	-0.02
128	SLU 62	11	-375	6670	14.64	7.81	-0.02
128	SLU 63	11	-380	6652	14.83	7.78	-0.02
128	SLU 64	10	-346	6174	13.44	7.16	-0.01
128	SLU 65	10	-354	6144	13.76	7.13	-0.01
128	SLU 66	11	-349	6315	13.54	7.35	-0.01
128	SLU 67	11	-353	6297	13.74	7.32	-0.01

Nodo	Cont.	Reazione a traslazione			Reazione a rotazione		
Ind.	N.br.	x	y	z	x	y	z
128	SLU 68	11	-356	6244	13.82	7.26	-0.01
128	SLU 69	11	-350	6415	13.6	7.48	-0.02
128	SLU 70	11	-355	6397	13.8	7.45	-0.02
128	SLU 71	11	-349	6373	13.56	7.42	-0.01
128	SLU 72	11	-354	6356	13.75	7.4	-0.01
128	SLU 73	12	-388	6826	15.2	7.97	-0.02
128	SLU 74	12	-383	6997	14.98	8.19	-0.02
128	SLU 75	12	-388	6979	15.18	8.17	-0.02
128	SLU 76	12	-390	6926	15.26	8.1	-0.02
128	SLU 77	12	-384	7097	15.04	8.32	-0.02
128	SLU 78	12	-389	7079	15.24	8.3	-0.02
128	SLU 79	12	-383	7056	15	8.27	-0.02
128	SLU 80	12	-388	7038	15.19	8.25	-0.02
128	SLU 81	12	-395	7149	15.5	8.37	-0.02
128	SLU 82	12	-400	7131	15.69	8.35	-0.02
128	SLU 83	12	-397	7248	15.56	8.5	-0.02
128	SLU 84	12	-401	7231	15.75	8.48	-0.02
128	SLE RA 1	8	-262	4622	10.13	5.36	-0.01
128	SLE RA 2	8	-267	4602	10.35	5.33	-0.01
128	SLE RA 3	8	-263	4716	10.2	5.48	-0.01
128	SLE RA 4	8	-266	4704	10.33	5.46	-0.01
128	SLE RA 5	8	-268	4669	10.39	5.42	-0.01
128	SLE RA 6	8	-264	4782	10.24	5.57	-0.01
128	SLE RA 7	8	-267	4771	10.37	5.55	-0.01
128	SLE RA 8	8	-264	4755	10.21	5.53	-0.01
128	SLE RA 9	8	-267	4743	10.34	5.51	-0.01
128	SLE RA 10	9	-290	5057	11.31	5.9	-0.01
128	SLE RA 11	9	-286	5171	11.17	6.04	-0.01
128	SLE RA 12	9	-289	5159	11.29	6.03	-0.01
128	SLE RA 13	9	-291	5124	11.35	5.98	-0.01
128	SLE RA 14	9	-287	5237	11.21	6.13	-0.01
128	SLE RA 15	9	-290	5225	11.33	6.11	-0.01
128	SLE RA 16	9	-286	5210	11.17	6.09	-0.01
128	SLE RA 17	9	-290	5198	11.3	6.08	-0.01
128	SLE RA 18	9	-294	5272	11.51	6.16	-0.01
128	SLE RA 19	9	-298	5260	11.64	6.15	-0.01
128	SLE RA 20	9	-295	5338	11.55	6.25	-0.01
128	SLE RA 21	9	-298	5326	11.68	6.23	-0.01
128	SLE FR 1	8	-262	4622	10.13	5.36	-0.01
128	SLE FR 2	8	-263	4618	10.18	5.35	-0.01
128	SLE FR 3	8	-262	4648	10.15	5.39	-0.01
128	SLE FR 4	8	-273	4813	10.59	5.59	-0.01
128	SLE FR 5	8	-272	4843	10.56	5.63	-0.01
128	SLE FR 6	8	-278	4947	10.82	5.76	-0.01
128	SLE QP 1	8	-262	4622	10.13	5.36	-0.01
128	SLE QP 2	8	-272	4817	10.55	5.6	-0.01
128	SLD 1	17	-222	4267	8.21	13.69	-0.03
128	SLD 2	17	-222	4267	8.21	13.69	-0.03
128	SLD 3	19	-695	4354	31.05	15.16	-0.03
128	SLD 4	19	-695	4354	31.05	15.16	-0.03
128	SLD 5	9	460	4520	-24.81	5.81	-0.01
128	SLD 6	9	460	4520	-24.81	5.81	-0.01
128	SLD 7	14	-1115	4810	51.35	10.69	-0.02
128	SLD 8	14	-1115	4810	51.35	10.69	-0.02
128	SLD 9	3	572	4824	-30.26	0.51	0
128	SLD 10	3	572	4824	-30.26	0.51	0
128	SLD 11	8	-1003	5113	45.9	5.39	-0.01
128	SLD 12	8	-1003	5113	45.9	5.39	-0.01
128	SLD 13	-3	152	5280	-9.96	-3.96	0.01
128	SLD 14	-3	152	5280	-9.96	-3.96	0.01
128	SLD 15	-1	-321	5366	12.89	-2.49	0
128	SLD 16	-1	-321	5366	12.89	-2.49	0
128	SLV 1	30	-151	3539	4.85	24.99	-0.04
128	SLV 2	30	-151	3539	4.85	24.99	-0.04
128	SLV 3	34	-1254	3744	58.18	28.53	-0.05
128	SLV 4	34	-1254	3744	58.18	28.53	-0.05
128	SLV 5	9	1438	4123	-72.05	6.04	-0.01
128	SLV 6	9	1438	4123	-72.05	6.04	-0.01
128	SLV 7	21	-2239	4805	105.72	17.85	-0.03
128	SLV 8	21	-2239	4805	105.72	17.85	-0.03
128	SLV 9	-5	1696	4828	-84.63	-6.65	0.01
128	SLV 10	-5	1696	4828	-84.63	-6.65	0.01
128	SLV 11	7	-1981	5510	93.14	5.16	-0.01
128	SLV 12	7	-1981	5510	93.14	5.16	-0.01
128	SLV 13	-18	711	5890	-37.08	-17.33	0.03
128	SLV 14	-18	711	5890	-37.08	-17.33	0.03
128	SLV 15	-14	-392	6094	16.25	-13.79	0.02
128	SLV 16	-14	-392	6094	16.25	-13.79	0.02
129	SLU 1	5	-300	4115	13.93	3.38	0
129	SLU 2	5	-300	4081	13.91	3.45	0
129	SLU 3	5	-306	4232	14.26	3.5	0
129	SLU 4	5	-306	4212	14.24	3.53	0
129	SLU 5	5	-305	4159	14.17	3.52	0
129	SLU 6	5	-311	4310	14.51	3.57	0
129	SLU 7	5	-312	4289	14.5	3.61	0
129	SLU 8	5	-310	4270	14.44	3.53	0
129	SLU 9	5	-310	4250	14.43	3.57	0
129	SLU 10	5	-338	4692	15.74	3.77	0
129	SLU 11	5	-344	4843	16.08	3.82	0
129	SLU 12	5	-344	4822	16.07	3.85	0
129	SLU 13	5	-343	4769	16	3.84	0

Nodo	Cont.	Reazione a traslazione			Reazione a rotazione		
Ind.	N.br.	x	y	z	x	y	z
129	SLU 14	5	-349	4920	16.34	3.89	0
129	SLU 15	5	-350	4900	16.33	3.93	0
129	SLU 16	5	-348	4881	16.27	3.85	0
129	SLU 17	5	-348	4860	16.26	3.89	0
129	SLU 18	5	-354	4987	16.54	3.84	0
129	SLU 19	5	-354	4967	16.53	3.88	0
129	SLU 20	5	-359	5065	16.8	3.91	0
129	SLU 21	5	-359	5044	16.79	3.95	0
129	SLU 22	5	-328	4632	15.35	3.82	0.01
129	SLU 23	5	-328	4598	15.34	3.89	0.01
129	SLU 24	5	-335	4749	15.68	3.93	0.01
129	SLU 25	5	-335	4728	15.67	3.97	0.01
129	SLU 26	5	-334	4676	15.59	3.96	0.01
129	SLU 27	5	-340	4826	15.93	4.01	0.01
129	SLU 28	5	-340	4806	15.92	4.05	0.01
129	SLU 29	5	-339	4787	15.86	3.97	0.01
129	SLU 30	5	-339	4767	15.85	4.01	0.01
129	SLU 31	6	-366	5208	17.16	4.21	0.01
129	SLU 32	6	-372	5359	17.5	4.25	0.01
129	SLU 33	6	-373	5339	17.49	4.29	0.01
129	SLU 34	6	-372	5286	17.42	4.28	0.01
129	SLU 35	6	-378	5437	17.76	4.33	0.01
129	SLU 36	6	-378	5416	17.75	4.37	0.01
129	SLU 37	6	-377	5398	17.69	4.29	0.01
129	SLU 38	6	-377	5377	17.68	4.33	0.01
129	SLU 39	6	-382	5504	17.96	4.28	0.01
129	SLU 40	6	-382	5484	17.95	4.32	0.01
129	SLU 41	6	-388	5582	18.22	4.35	0.01
129	SLU 42	6	-388	5561	18.21	4.39	0.01
129	SLU 43	6	-380	5173	17.63	4.25	0.01
129	SLU 44	6	-380	5139	17.61	4.32	0.01
129	SLU 45	6	-386	5290	17.95	4.36	0.01
129	SLU 46	6	-387	5269	17.94	4.4	0.01
129	SLU 47	6	-386	5216	17.86	4.39	0.01
129	SLU 48	6	-392	5367	18.2	4.43	0.01
129	SLU 49	6	-392	5347	18.19	4.47	0.01
129	SLU 50	6	-391	5328	18.13	4.4	0.01
129	SLU 51	6	-391	5307	18.12	4.44	0.01
129	SLU 52	6	-418	5749	19.44	4.64	0.01
129	SLU 53	6	-424	5900	19.78	4.68	0.01
129	SLU 54	6	-424	5879	19.77	4.72	0.01
129	SLU 55	6	-423	5827	19.69	4.71	0.01
129	SLU 56	6	-430	5977	20.03	4.75	0.01
129	SLU 57	6	-430	5957	20.02	4.79	0.01
129	SLU 58	6	-428	5938	19.96	4.72	0.01
129	SLU 59	6	-429	5918	19.95	4.76	0.01
129	SLU 60	6	-434	6045	20.24	4.71	0.01
129	SLU 61	6	-434	6024	20.23	4.75	0.01
129	SLU 62	6	-439	6122	20.49	4.78	0.01
129	SLU 63	6	-440	6102	20.48	4.82	0.01
129	SLU 64	6	-408	5690	19.05	4.69	0.01
129	SLU 65	6	-409	5655	19.03	4.75	0.01
129	SLU 66	7	-415	5806	19.37	4.8	0.01
129	SLU 67	7	-415	5786	19.36	4.84	0.01
129	SLU 68	6	-414	5733	19.28	4.83	0.01
129	SLU 69	7	-420	5884	19.62	4.87	0.01
129	SLU 70	7	-420	5863	19.61	4.91	0.01
129	SLU 71	7	-419	5845	19.55	4.83	0.01
129	SLU 72	7	-419	5824	19.54	4.87	0.01
129	SLU 73	7	-447	6266	20.86	5.07	0.01
129	SLU 74	7	-453	6417	21.2	5.12	0.01
129	SLU 75	7	-453	6396	21.19	5.16	0.01
129	SLU 76	7	-452	6343	21.11	5.15	0.01
129	SLU 77	7	-458	6494	21.45	5.19	0.01
129	SLU 78	7	-458	6474	21.44	5.23	0.01
129	SLU 79	7	-457	6455	21.38	5.15	0.01
129	SLU 80	7	-457	6435	21.37	5.19	0.01
129	SLU 81	7	-462	6562	21.66	5.14	0.01
129	SLU 82	7	-463	6541	21.65	5.18	0.01
129	SLU 83	7	-468	6639	21.91	5.22	0.01
129	SLU 84	7	-468	6619	21.9	5.26	0.01
129	SLE RA 1	5	-308	4263	14.34	3.51	0
129	SLE RA 2	5	-308	4240	14.33	3.55	0
129	SLE RA 3	5	-312	4341	14.55	3.58	0
129	SLE RA 4	5	-312	4327	14.55	3.61	0
129	SLE RA 5	5	-312	4292	14.5	3.6	0
129	SLE RA 6	5	-316	4393	14.72	3.63	0
129	SLE RA 7	5	-316	4379	14.72	3.66	0.01
129	SLE RA 8	5	-315	4366	14.68	3.61	0
129	SLE RA 9	5	-315	4353	14.67	3.63	0
129	SLE RA 10	5	-333	4647	15.55	3.77	0
129	SLE RA 11	5	-337	4748	15.77	3.8	0
129	SLE RA 12	5	-338	4734	15.77	3.82	0
129	SLE RA 13	5	-337	4699	15.71	3.82	0
129	SLE RA 14	5	-341	4799	15.94	3.85	0
129	SLE RA 15	5	-341	4786	15.93	3.87	0.01
129	SLE RA 16	5	-340	4773	15.9	3.82	0
129	SLE RA 17	5	-340	4760	15.89	3.85	0
129	SLE RA 18	5	-344	4844	16.08	3.81	0
129	SLE RA 19	5	-344	4831	16.07	3.84	0
129	SLE RA 20	5	-347	4896	16.25	3.86	0

Nodo	Cont.	Reazione a traslazione			Reazione a rotazione		
Ind.	N.br.	x	y	z	x	y	z
129	SLE RA 21	5	-348	4882	16.24	3.89	0
129	SLE FR 1	5	-308	4263	14.34	3.51	0
129	SLE FR 2	5	-308	4258	14.34	3.52	0
129	SLE FR 3	5	-309	4284	14.41	3.53	0
129	SLE FR 4	5	-319	4433	14.86	3.61	0
129	SLE FR 5	5	-320	4458	14.93	3.62	0
129	SLE FR 6	5	-326	4554	15.21	3.66	0
129	SLE QP 1	5	-308	4263	14.34	3.51	0
129	SLE QP 2	5	-319	4437	14.86	3.6	0
129	SLD 1	17	129	4944	-6.62	13.9	0.02
129	SLD 2	17	129	4944	-6.62	13.9	0.02
129	SLD 3	19	-337	5010	15.73	15.67	0.02
129	SLD 4	19	-337	5010	15.73	15.67	0.02
129	SLD 5	6	521	4489	-25.48	4	0.01
129	SLD 6	6	521	4489	-25.48	4	0.01
129	SLD 7	12	-1030	4709	49.02	9.91	0.01
129	SLD 8	12	-1030	4709	49.02	9.91	0.01
129	SLD 9	-3	393	4166	-19.3	-2.71	0
129	SLD 10	-3	393	4166	-19.3	-2.71	0
129	SLD 11	4	-1159	4385	55.2	3.2	0
129	SLD 12	4	-1159	4385	55.2	3.2	0
129	SLD 13	-10	-301	3865	13.99	-8.47	-0.01
129	SLD 14	-10	-301	3865	13.99	-8.47	-0.01
129	SLD 15	-8	-766	3931	36.34	-6.69	-0.01
129	SLD 16	-8	-766	3931	36.34	-6.69	-0.01
129	SLV 1	35	718	5607	-34.91	28.09	0.04
129	SLV 2	35	718	5607	-34.91	28.09	0.04
129	SLV 3	40	-368	5761	17.23	32.43	0.05
129	SLV 4	40	-368	5761	17.23	32.43	0.05
129	SLV 5	6	1639	4553	-79.16	4.37	0.01
129	SLV 6	6	1639	4553	-79.16	4.37	0.01
129	SLV 7	23	-1981	5069	94.66	18.83	0.03
129	SLV 8	23	-1981	5069	94.66	18.83	0.03
129	SLV 9	-13	1343	3806	-64.94	-11.62	-0.02
129	SLV 10	-13	1343	3806	-64.94	-11.62	-0.02
129	SLV 11	4	-2277	4321	108.88	2.83	0
129	SLV 12	4	-2277	4321	108.88	2.83	0
129	SLV 13	-30	-269	3113	12.49	-25.22	-0.04
129	SLV 14	-30	-269	3113	12.49	-25.22	-0.04
129	SLV 15	-25	-1355	3268	64.64	-20.89	-0.04
129	SLV 16	-25	-1355	3268	64.64	-20.89	-0.04
130	SLU 1	3	19	789	-0.08	2.01	0.01
130	SLU 2	3	18	786	-0.08	2.15	0.01
130	SLU 3	3	19	797	-0.08	2.06	0.01
130	SLU 4	3	19	795	-0.08	2.14	0.01
130	SLU 5	3	19	792	-0.08	2.18	0.01
130	SLU 6	3	20	802	-0.08	2.09	0.01
130	SLU 7	3	20	800	-0.08	2.17	0.01
130	SLU 8	3	19	799	-0.08	2.07	0.01
130	SLU 9	3	19	798	-0.08	2.16	0.01
130	SLU 10	4	25	936	-0.2	2.57	0.01
130	SLU 11	3	26	947	-0.2	2.48	0.01
130	SLU 12	4	26	945	-0.2	2.57	0.01
130	SLU 13	4	25	941	-0.2	2.61	0.01
130	SLU 14	3	26	952	-0.2	2.51	0.01
130	SLU 15	4	26	950	-0.2	2.6	0.01
130	SLU 16	3	26	949	-0.2	2.5	0.01
130	SLU 17	4	26	948	-0.2	2.58	0.01
130	SLU 18	4	28	1003	-0.25	2.62	0.01
130	SLU 19	4	28	1002	-0.25	2.7	0.01
130	SLU 20	4	28	1008	-0.25	2.65	0.01
130	SLU 21	4	28	1007	-0.25	2.73	0.01
130	SLU 22	3	23	853	-0.12	2.3	0.01
130	SLU 23	3	22	850	-0.12	2.44	0.01
130	SLU 24	3	23	861	-0.12	2.35	0.01
130	SLU 25	3	23	859	-0.12	2.43	0.01
130	SLU 26	3	23	855	-0.12	2.47	0.01
130	SLU 27	3	24	866	-0.12	2.38	0.01
130	SLU 28	3	24	864	-0.12	2.47	0.01
130	SLU 29	3	24	863	-0.12	2.37	0.01
130	SLU 30	3	23	862	-0.12	2.45	0.01
130	SLU 31	4	29	1000	-0.24	2.87	0.01
130	SLU 32	4	30	1011	-0.24	2.77	0.01
130	SLU 33	4	30	1009	-0.24	2.86	0.01
130	SLU 34	4	29	1005	-0.24	2.9	0.01
130	SLU 35	4	30	1016	-0.24	2.81	0.01
130	SLU 36	4	30	1014	-0.24	2.89	0.01
130	SLU 37	4	30	1013	-0.24	2.79	0.01
130	SLU 38	4	30	1012	-0.24	2.87	0.01
130	SLU 39	4	32	1067	-0.29	2.91	0.01
130	SLU 40	4	32	1066	-0.29	2.99	0.01
130	SLU 41	4	33	1072	-0.29	2.94	0.01
130	SLU 42	4	32	1071	-0.29	3.02	0.01
130	SLU 43	3	23	1004	-0.09	2.51	0.01
130	SLU 44	4	22	1001	-0.09	2.65	0.01
130	SLU 45	3	23	1012	-0.09	2.56	0.01
130	SLU 46	4	23	1010	-0.09	2.64	0.01
130	SLU 47	4	23	1006	-0.09	2.68	0.01
130	SLU 48	3	24	1017	-0.09	2.59	0.01
130	SLU 49	4	24	1015	-0.09	2.68	0.01
130	SLU 50	3	24	1014	-0.09	2.58	0.01

Nodo	Cont.	Reazione a traslazione			Reazione a rotazione		
Ind.	N.br.	x	y	z	x	y	z
130	SLU 51	4	23	1012	-0.09	2.66	0.01
130	SLU 52	4	29	1151	-0.21	3.08	0.01
130	SLU 53	4	30	1161	-0.21	2.98	0.01
130	SLU 54	4	30	1160	-0.21	3.07	0.01
130	SLU 55	4	29	1156	-0.21	3.11	0.01
130	SLU 56	4	30	1167	-0.21	3.02	0.01
130	SLU 57	4	30	1165	-0.21	3.1	0.01
130	SLU 58	4	30	1164	-0.21	3	0.01
130	SLU 59	4	30	1162	-0.21	3.08	0.01
130	SLU 60	4	32	1218	-0.26	3.12	0.01
130	SLU 61	4	32	1217	-0.26	3.2	0.01
130	SLU 62	4	32	1223	-0.26	3.15	0.01
130	SLU 63	4	32	1222	-0.26	3.23	0.02
130	SLU 64	4	27	1068	-0.13	2.81	0.01
130	SLU 65	4	27	1065	-0.13	2.94	0.01
130	SLU 66	4	28	1076	-0.13	2.85	0.01
130	SLU 67	4	27	1074	-0.13	2.94	0.01
130	SLU 68	4	27	1070	-0.13	2.98	0.01
130	SLU 69	4	28	1081	-0.13	2.88	0.01
130	SLU 70	4	28	1079	-0.13	2.97	0.01
130	SLU 71	4	28	1078	-0.13	2.87	0.01
130	SLU 72	4	28	1076	-0.13	2.95	0.01
130	SLU 73	5	33	1215	-0.25	3.37	0.02
130	SLU 74	5	34	1225	-0.25	3.28	0.02
130	SLU 75	5	34	1224	-0.25	3.36	0.02
130	SLU 76	5	34	1220	-0.25	3.4	0.02
130	SLU 77	5	35	1231	-0.25	3.31	0.02
130	SLU 78	5	34	1229	-0.25	3.39	0.02
130	SLU 79	5	34	1228	-0.25	3.29	0.02
130	SLU 80	5	34	1226	-0.25	3.38	0.02
130	SLU 81	5	36	1282	-0.3	3.41	0.02
130	SLU 82	5	36	1280	-0.3	3.5	0.02
130	SLU 83	5	37	1287	-0.3	3.44	0.02
130	SLU 84	5	36	1286	-0.3	3.53	0.02
130	SLE RA 1	3	20	807	-0.09	2.09	0.01
130	SLE RA 2	3	20	806	-0.09	2.19	0.01
130	SLE RA 3	3	20	813	-0.09	2.13	0.01
130	SLE RA 4	3	20	811	-0.09	2.18	0.01
130	SLE RA 5	3	20	809	-0.09	2.21	0.01
130	SLE RA 6	3	21	816	-0.09	2.15	0.01
130	SLE RA 7	3	20	815	-0.09	2.2	0.01
130	SLE RA 8	3	20	814	-0.09	2.14	0.01
130	SLE RA 9	3	20	813	-0.09	2.19	0.01
130	SLE RA 10	3	24	906	-0.17	2.47	0.01
130	SLE RA 11	3	25	912	-0.17	2.41	0.01
130	SLE RA 12	3	24	911	-0.17	2.46	0.01
130	SLE RA 13	3	24	909	-0.17	2.49	0.01
130	SLE RA 14	3	25	916	-0.17	2.43	0.01
130	SLE RA 15	3	25	915	-0.17	2.49	0.01
130	SLE RA 16	3	25	914	-0.17	2.42	0.01
130	SLE RA 17	3	25	913	-0.17	2.47	0.01
130	SLE RA 18	3	26	950	-0.21	2.5	0.01
130	SLE RA 19	4	26	949	-0.2	2.55	0.01
130	SLE RA 20	3	26	954	-0.21	2.52	0.01
130	SLE RA 21	4	26	953	-0.21	2.57	0.01
130	SLE FR 1	3	20	807	-0.09	2.09	0.01
130	SLE FR 2	3	20	807	-0.09	2.11	0.01
130	SLE FR 3	3	20	809	-0.09	2.1	0.01
130	SLE FR 4	3	22	850	-0.12	2.23	0.01
130	SLE FR 5	3	22	852	-0.12	2.22	0.01
130	SLE FR 6	3	23	879	-0.15	2.3	0.01
130	SLE QP 1	3	20	807	-0.09	2.09	0.01
130	SLE QP 2	3	22	850	-0.12	2.22	0.01
130	SLD 1	14	-27	822	-2.68	12.02	0.04
130	SLD 2	14	-27	822	-2.68	12.02	0.04
130	SLD 3	16	109	853	1.33	13.63	0.05
130	SLD 4	16	109	853	1.33	13.63	0.05
130	SLD 5	4	-200	795	-6.97	2.72	0.01
130	SLD 6	4	-200	795	-6.97	2.72	0.01
130	SLD 7	10	254	898	6.39	8.08	0.03
130	SLD 8	10	254	898	6.39	8.08	0.03
130	SLD 9	-4	-211	803	-6.64	-3.65	-0.01
130	SLD 10	-4	-211	803	-6.64	-3.65	-0.01
130	SLD 11	3	243	906	6.72	1.71	0.01
130	SLD 12	3	243	906	6.72	1.71	0.01
130	SLD 13	-10	-66	848	-1.58	-9.2	-0.03
130	SLD 14	-10	-66	848	-1.58	-9.2	-0.03
130	SLD 15	-8	71	879	2.43	-7.59	-0.02
130	SLD 16	-8	71	879	2.43	-7.59	-0.02
130	SLV 1	30	-92	783	-6.13	25.72	0.09
130	SLV 2	30	-92	783	-6.13	25.72	0.09
130	SLV 3	35	227	857	3.25	29.65	0.1
130	SLV 4	35	227	857	3.25	29.65	0.1
130	SLV 5	4	-496	719	-16.16	3.31	0.01
130	SLV 6	4	-496	719	-16.16	3.31	0.01
130	SLV 7	20	567	963	15.13	16.41	0.06
130	SLV 8	20	567	963	15.13	16.41	0.06
130	SLV 9	-14	-524	737	-15.37	-11.98	-0.04
130	SLV 10	-14	-524	737	-15.37	-11.98	-0.04
130	SLV 11	2	540	982	15.92	1.13	0.01
130	SLV 12	2	540	982	15.92	1.13	0.01

Nodo	Cont.	Reazione a traslazione			Reazione a rotazione		
Ind.	N.br.	x	y	z	x	y	z
130	SLV 13	-29	-184	844	-3.5	-25.22	-0.08
130	SLV 14	-29	-184	844	-3.5	-25.22	-0.08
130	SLV 15	-24	135	917	5.89	-21.29	-0.07
130	SLV 16	-24	135	917	5.89	-21.29	-0.07
131	SLU 1	0	-51	3867	-4.3	-0.47	0
131	SLU 2	0	243	3832	-17.61	0.09	0
131	SLU 3	0	-49	3979	-4.53	-0.49	0
131	SLU 4	0	127	3958	-12.51	-0.15	0
131	SLU 5	0	245	3905	-17.8	0.08	0
131	SLU 6	0	-47	4051	-4.72	-0.5	0
131	SLU 7	0	129	4030	-12.71	-0.16	0
131	SLU 8	0	-46	4011	-4.7	-0.49	0
131	SLU 9	0	130	3990	-12.68	-0.15	0
131	SLU 10	0	242	4391	-18.32	0.02	0
131	SLU 11	0	-50	4538	-5.24	-0.56	0
131	SLU 12	0	126	4517	-13.22	-0.22	0
131	SLU 13	0	244	4463	-18.52	0.01	0
131	SLU 14	0	-48	4610	-5.44	-0.57	0
131	SLU 15	0	128	4589	-13.42	-0.23	0
131	SLU 16	0	-47	4570	-5.41	-0.56	0
131	SLU 17	0	129	4549	-13.39	-0.22	0
131	SLU 18	0	-52	4665	-5.32	-0.57	0
131	SLU 19	0	124	4644	-13.3	-0.24	0
131	SLU 20	0	-50	4737	-5.52	-0.58	0
131	SLU 21	0	126	4716	-13.5	-0.24	0
131	SLU 22	0	-51	4391	-5.01	-0.54	0
131	SLU 23	0	243	4356	-18.32	0.02	0
131	SLU 24	0	-49	4503	-5.24	-0.55	0
131	SLU 25	0	127	4482	-13.22	-0.22	0
131	SLU 26	0	245	4428	-18.51	0.01	0
131	SLU 27	0	-47	4575	-5.43	-0.56	0
131	SLU 28	0	129	4554	-13.42	-0.22	0
131	SLU 29	0	-46	4535	-5.41	-0.56	0
131	SLU 30	0	130	4514	-13.39	-0.22	0
131	SLU 31	0	242	4915	-19.03	-0.05	0
131	SLU 32	0	-50	5061	-5.95	-0.62	0
131	SLU 33	0	126	5041	-13.93	-0.29	0
131	SLU 34	0	244	4987	-19.23	-0.06	0
131	SLU 35	0	-48	5133	-6.15	-0.63	0
131	SLU 36	0	128	5113	-14.13	-0.29	0
131	SLU 37	0	-47	5093	-6.12	-0.63	0
131	SLU 38	0	129	5073	-14.1	-0.29	0
131	SLU 39	0	-52	5189	-6.03	-0.64	0
131	SLU 40	0	124	5168	-14.01	-0.3	0
131	SLU 41	-1	-50	5261	-6.23	-0.65	0
131	SLU 42	0	126	5240	-14.21	-0.31	0
131	SLU 43	0	-66	4847	-5.35	-0.59	0
131	SLU 44	0	227	4813	-18.65	-0.03	0
131	SLU 45	0	-64	4959	-5.57	-0.61	0
131	SLU 46	0	112	4939	-13.55	-0.27	0
131	SLU 47	0	230	4885	-18.85	-0.04	0
131	SLU 48	0	-62	5031	-5.77	-0.62	0
131	SLU 49	0	114	5011	-13.75	-0.28	0
131	SLU 50	0	-61	4992	-5.74	-0.61	0
131	SLU 51	0	114	4971	-13.73	-0.27	0
131	SLU 52	0	227	5372	-19.37	-0.1	0
131	SLU 53	-1	-65	5518	-6.29	-0.68	0
131	SLU 54	0	111	5497	-14.27	-0.34	0
131	SLU 55	0	229	5444	-19.56	-0.11	0
131	SLU 56	-1	-63	5590	-6.48	-0.69	0
131	SLU 57	0	113	5569	-14.46	-0.35	0
131	SLU 58	-1	-62	5550	-6.46	-0.68	0
131	SLU 59	0	114	5530	-14.44	-0.34	0
131	SLU 60	-1	-67	5645	-6.37	-0.69	0
131	SLU 61	0	109	5625	-14.35	-0.36	0
131	SLU 62	-1	-65	5718	-6.56	-0.7	0
131	SLU 63	0	111	5697	-14.55	-0.36	0
131	SLU 64	-1	-66	5371	-6.06	-0.66	0
131	SLU 65	0	227	5337	-19.36	-0.1	0
131	SLU 66	-1	-64	5483	-6.28	-0.67	0
131	SLU 67	0	112	5462	-14.27	-0.34	0
131	SLU 68	0	230	5409	-19.56	-0.1	0
131	SLU 69	-1	-62	5555	-6.48	-0.68	0
131	SLU 70	0	114	5534	-14.46	-0.34	0
131	SLU 71	-1	-61	5515	-6.45	-0.68	0
131	SLU 72	0	114	5495	-14.44	-0.34	0
131	SLU 73	0	227	5895	-20.08	-0.17	0
131	SLU 74	-1	-65	6042	-7	-0.74	0
131	SLU 75	0	111	6021	-14.98	-0.41	0
131	SLU 76	0	229	5967	-20.27	-0.17	0
131	SLU 77	-1	-63	6114	-7.19	-0.75	0
131	SLU 78	0	113	6093	-15.18	-0.41	0
131	SLU 79	-1	-62	6074	-7.17	-0.75	0
131	SLU 80	0	114	6053	-15.15	-0.41	0
131	SLU 81	-1	-67	6169	-7.08	-0.76	0
131	SLU 82	0	109	6149	-15.06	-0.42	0
131	SLU 83	-1	-65	6241	-7.27	-0.77	0
131	SLU 84	0	111	6221	-15.26	-0.43	0
131	SLE RA 1	0	-51	4017	-4.51	-0.49	0
131	SLE RA 2	0	145	3994	-13.37	-0.12	0
131	SLE RA 3	0	-50	4091	-4.65	-0.5	0

Nodo	Cont.	Reazione a traslazione			Reazione a rotazione		
Ind.	N.br.	x	y	z	x	y	z
131	SLE RA 4	0	68	4077	-9.98	-0.28	0
131	SLE RA 5	0	146	4042	-13.51	-0.12	0
131	SLE RA 6	0	-48	4139	-4.79	-0.51	0
131	SLE RA 7	0	69	4125	-10.11	-0.28	0
131	SLE RA 8	0	-48	4113	-4.77	-0.5	0
131	SLE RA 9	0	70	4099	-10.09	-0.28	0
131	SLE RA 10	0	144	4366	-13.85	-0.16	0
131	SLE RA 11	0	-50	4464	-5.13	-0.55	0
131	SLE RA 12	0	67	4450	-10.45	-0.32	0
131	SLE RA 13	0	146	4414	-13.98	-0.17	0
131	SLE RA 14	0	-49	4512	-5.26	-0.55	0
131	SLE RA 15	0	69	4498	-10.58	-0.33	0
131	SLE RA 16	0	-48	4485	-5.24	-0.55	0
131	SLE RA 17	0	69	4471	-10.56	-0.33	0
131	SLE RA 18	0	-51	4549	-5.18	-0.56	0
131	SLE RA 19	0	66	4535	-10.5	-0.33	0
131	SLE RA 20	0	-50	4597	-5.32	-0.57	0
131	SLE RA 21	0	67	4583	-10.64	-0.34	0
131	SLE FR 1	0	-51	4017	-4.51	-0.49	0
131	SLE FR 2	0	-11	4012	-6.28	-0.42	0
131	SLE FR 3	0	-50	4036	-4.56	-0.5	0
131	SLE FR 4	0	-12	4172	-6.48	-0.44	0
131	SLE FR 5	0	-50	4195	-4.76	-0.52	0
131	SLE FR 6	0	-51	4283	-4.84	-0.53	0
131	SLE QP 1	0	-51	4017	-4.51	-0.49	0
131	SLE QP 2	0	-51	4176	-4.71	-0.51	0
131	SLD 1	9	-73	4346	-4.13	8.84	0.01
131	SLD 2	9	-73	4346	-4.13	8.84	0.01
131	SLD 3	5	-504	4204	16.06	4.96	0
131	SLD 4	5	-504	4204	16.06	4.96	0
131	SLD 5	8	596	4442	-35.16	8.17	0
131	SLD 6	8	596	4442	-35.16	8.17	0
131	SLD 7	-5	-840	3970	32.15	-4.75	0
131	SLD 8	-5	-840	3970	32.15	-4.75	0
131	SLD 9	4	739	4383	-41.56	3.72	0
131	SLD 10	4	739	4383	-41.56	3.72	0
131	SLD 11	-9	-697	3910	25.74	-9.19	0
131	SLD 12	-9	-697	3910	25.74	-9.19	0
131	SLD 13	-6	402	4148	-25.48	-5.99	0
131	SLD 14	-6	402	4148	-25.48	-5.99	0
131	SLD 15	-10	-28	4006	-5.29	-9.86	-0.01
131	SLD 16	-10	-28	4006	-5.29	-9.86	-0.01
131	SLV 1	23	-112	4567	-2.82	22.86	0.01
131	SLV 2	23	-112	4567	-2.82	22.86	0.01
131	SLV 3	13	-1123	4235	44.55	12.97	0.01
131	SLV 4	13	-1123	4235	44.55	12.97	0.01
131	SLV 5	21	1464	4798	-75.99	21.49	0.01
131	SLV 6	21	1464	4798	-75.99	21.49	0.01
131	SLV 7	-11	-1906	3690	81.91	-11.46	0
131	SLV 8	-11	-1906	3690	81.91	-11.46	0
131	SLV 9	10	1804	4663	-91.33	10.43	0
131	SLV 10	10	1804	4663	-91.33	10.43	0
131	SLV 11	-22	-1566	3555	66.57	-22.51	-0.01
131	SLV 12	-22	-1566	3555	66.57	-22.51	-0.01
131	SLV 13	-14	1022	4117	-53.96	-14	-0.01
131	SLV 14	-14	1022	4117	-53.96	-14	-0.01
131	SLV 15	-23	11	3785	-6.59	-23.88	-0.01
131	SLV 16	-23	11	3785	-6.59	-23.88	-0.01
132	SLU 1	15	299	5210	-13.69	12.56	0
132	SLU 2	9	364	5170	-16.56	6.16	0
132	SLU 3	15	307	5363	-14.08	12.98	0
132	SLU 4	12	347	5339	-15.8	9.14	0
132	SLU 5	10	367	5269	-16.7	6.43	0
132	SLU 6	15	310	5462	-14.22	13.26	0
132	SLU 7	12	350	5438	-15.94	9.42	0
132	SLU 8	15	305	5409	-13.97	13.11	0
132	SLU 9	12	344	5385	-15.69	9.27	0
132	SLU 10	11	407	5764	-18.47	7.89	0
132	SLU 11	17	350	5957	-15.99	14.71	0
132	SLU 12	14	389	5933	-17.71	10.87	0
132	SLU 13	12	410	5864	-18.61	8.16	0
132	SLU 14	17	353	6056	-16.13	14.99	0
132	SLU 15	14	392	6033	-17.85	11.15	0
132	SLU 16	17	347	6003	-15.88	14.84	0
132	SLU 17	14	386	5979	-17.6	11	0
132	SLU 18	17	359	6059	-16.42	15.03	0
132	SLU 19	14	398	6035	-18.14	11.19	0
132	SLU 20	18	362	6158	-16.56	15.3	0
132	SLU 21	15	401	6134	-18.28	11.46	0
132	SLU 22	16	340	5789	-15.55	14.23	0
132	SLU 23	11	406	5749	-18.42	7.83	0
132	SLU 24	17	349	5942	-15.94	14.65	0
132	SLU 25	14	388	5918	-17.66	10.82	0
132	SLU 26	12	409	5849	-18.56	8.11	0
132	SLU 27	17	352	6042	-16.08	14.93	0
132	SLU 28	14	391	6018	-17.8	11.09	0
132	SLU 29	17	346	5988	-15.83	14.78	0
132	SLU 30	14	385	5964	-17.55	10.94	0
132	SLU 31	13	448	6344	-20.33	9.56	0
132	SLU 32	19	391	6537	-17.85	16.38	-0.01
132	SLU 33	16	430	6513	-19.57	12.54	0

Nodo	Cont.	Reazione a traslazione			Reazione a rotazione		
Ind.	N.br.	x	y	z	x	y	z
132	SLU 34	14	451	6443	-20.47	9.83	0
132	SLU 35	19	394	6636	-17.99	16.66	-0.01
132	SLU 36	16	433	6612	-19.71	12.82	0
132	SLU 37	19	388	6583	-17.74	16.51	-0.01
132	SLU 38	16	428	6559	-19.46	12.67	0
132	SLU 39	19	400	6638	-18.28	16.7	-0.01
132	SLU 40	16	440	6614	-20	12.86	0
132	SLU 41	20	403	6738	-18.42	16.97	-0.01
132	SLU 42	16	443	6714	-20.14	13.13	0
132	SLU 43	18	374	6574	-17.16	15.75	0
132	SLU 44	13	440	6534	-20.02	9.35	0
132	SLU 45	19	383	6727	-17.55	16.18	0
132	SLU 46	16	422	6703	-19.26	12.34	0
132	SLU 47	13	443	6633	-20.17	9.63	0
132	SLU 48	19	386	6826	-17.69	16.45	-0.01
132	SLU 49	16	425	6802	-19.41	12.61	0
132	SLU 50	19	380	6773	-17.44	16.3	-0.01
132	SLU 51	16	420	6749	-19.16	12.46	0
132	SLU 52	15	482	7128	-21.94	11.08	0
132	SLU 53	21	425	7321	-19.46	17.91	-0.01
132	SLU 54	18	464	7297	-21.18	14.07	0
132	SLU 55	15	485	7228	-22.08	11.36	0
132	SLU 56	21	428	7421	-19.6	18.18	-0.01
132	SLU 57	18	467	7397	-21.32	14.34	-0.01
132	SLU 58	21	423	7367	-19.35	18.03	-0.01
132	SLU 59	18	462	7343	-21.07	14.19	-0.01
132	SLU 60	21	435	7423	-19.89	18.22	-0.01
132	SLU 61	18	474	7399	-21.61	14.38	-0.01
132	SLU 62	21	438	7522	-20.03	18.5	-0.01
132	SLU 63	18	477	7498	-21.75	14.66	-0.01
132	SLU 64	20	416	7153	-19.02	17.42	-0.01
132	SLU 65	15	481	7113	-21.89	11.03	0
132	SLU 66	21	424	7306	-19.41	17.85	-0.01
132	SLU 67	18	463	7282	-21.13	14.01	0
132	SLU 68	15	484	7213	-22.03	11.3	0
132	SLU 69	21	427	7406	-19.55	18.12	-0.01
132	SLU 70	18	466	7382	-21.27	14.28	-0.01
132	SLU 71	21	422	7352	-19.3	17.97	-0.01
132	SLU 72	18	461	7328	-21.02	14.13	-0.01
132	SLU 73	17	523	7708	-23.8	12.75	-0.01
132	SLU 74	23	466	7901	-21.32	19.58	-0.01
132	SLU 75	19	506	7877	-23.04	15.74	-0.01
132	SLU 76	17	526	7807	-23.94	13.03	-0.01
132	SLU 77	23	469	8000	-21.46	19.85	-0.01
132	SLU 78	20	509	7976	-23.18	16.01	-0.01
132	SLU 79	23	464	7947	-21.21	19.7	-0.01
132	SLU 80	20	503	7923	-22.93	15.86	-0.01
132	SLU 81	23	476	8002	-21.75	19.89	-0.01
132	SLU 82	20	515	7979	-23.47	16.05	-0.01
132	SLU 83	23	479	8102	-21.89	20.17	-0.01
132	SLU 84	20	518	8078	-23.61	16.33	-0.01
132	SLE RA 1	15	311	5375	-14.22	13.04	0
132	SLE RA 2	12	354	5349	-16.13	8.77	0
132	SLE RA 3	15	316	5477	-14.48	13.32	0
132	SLE RA 4	13	343	5461	-15.63	10.76	0
132	SLE RA 5	12	356	5415	-16.23	8.95	0
132	SLE RA 6	16	318	5543	-14.57	13.5	0
132	SLE RA 7	14	344	5528	-15.72	10.94	0
132	SLE RA 8	15	315	5508	-14.41	13.4	0
132	SLE RA 9	13	341	5492	-15.56	10.84	0
132	SLE RA 10	13	382	5745	-17.41	9.92	0
132	SLE RA 11	17	344	5873	-15.75	14.47	0
132	SLE RA 12	15	371	5857	-16.9	11.91	0
132	SLE RA 13	13	384	5811	-17.5	10.11	0
132	SLE RA 14	17	346	5940	-15.85	14.65	0
132	SLE RA 15	15	373	5924	-16.99	12.1	0
132	SLE RA 16	17	343	5904	-15.68	14.55	0
132	SLE RA 17	15	369	5888	-16.83	11.99	0
132	SLE RA 18	17	351	5941	-16.04	14.68	0
132	SLE RA 19	15	377	5925	-17.19	12.12	0
132	SLE RA 20	17	353	6008	-16.14	14.87	0
132	SLE RA 21	15	379	5992	-17.28	12.31	0
132	SLE FR 1	15	311	5375	-14.22	13.04	0
132	SLE FR 2	14	319	5370	-14.6	12.18	0
132	SLE FR 3	15	311	5402	-14.26	13.11	0
132	SLE FR 4	15	331	5540	-15.15	12.68	0
132	SLE FR 5	16	323	5571	-14.81	13.6	0
132	SLE FR 6	16	331	5658	-15.13	13.86	0
132	SLE QP 1	15	311	5375	-14.22	13.04	0
132	SLE QP 2	16	323	5545	-14.77	13.53	0
132	SLD 1	39	656	7127	-29.33	34.99	-0.01
132	SLD 2	39	656	7127	-29.33	34.99	-0.01
132	SLD 3	33	127	6717	-6.65	28.68	-0.01
132	SLD 4	33	127	6717	-6.65	28.68	-0.01
132	SLD 5	32	1224	6640	-53.53	29.54	-0.01
132	SLD 6	32	1224	6640	-53.53	29.54	-0.01
132	SLD 7	12	-538	5276	22.06	8.5	0
132	SLD 8	12	-538	5276	22.06	8.5	0
132	SLD 9	20	1183	5814	-51.59	18.56	-0.01
132	SLD 10	20	1183	5814	-51.59	18.56	-0.01
132	SLD 11	0	-579	4450	23.99	-2.48	0

Nodo	Cont.	Reazione a traslazione			Reazione a rotazione		
Ind.	N.br.	x	y	z	x	y	z
132	SLD 12	0	-579	4450	23.99	-2.48	0
132	SLD 13	-1	518	4373	-22.89	-1.62	0
132	SLD 14	-1	518	4373	-22.89	-1.62	0
132	SLD 15	-7	-10	3963	-0.21	-7.93	0
132	SLD 16	-7	-10	3963	-0.21	-7.93	0
132	SLV 1	70	1107	9225	-49.04	64.62	-0.02
132	SLV 2	70	1107	9225	-49.04	64.62	-0.02
132	SLV 3	55	-127	8268	3.89	48.67	-0.01
132	SLV 4	55	-127	8268	3.89	48.67	-0.01
132	SLV 5	55	2430	8100	-105.34	53.05	-0.02
132	SLV 6	55	2430	8100	-105.34	53.05	-0.02
132	SLV 7	5	-1684	4911	71.12	-0.13	0
132	SLV 8	5	-1684	4911	71.12	-0.13	0
132	SLV 9	27	2329	6179	-100.65	27.18	-0.01
132	SLV 10	27	2329	6179	-100.65	27.18	-0.01
132	SLV 11	-24	-1785	2990	75.8	-26	0.01
132	SLV 12	-24	-1785	2990	75.8	-26	0.01
132	SLV 13	-24	772	2821	-33.43	-21.61	0.01
132	SLV 14	-24	772	2821	-33.43	-21.61	0.01
132	SLV 15	-39	-462	1865	19.51	-37.56	0.01
132	SLV 16	-39	-462	1865	19.51	-37.56	0.01
133	SLU 1	0	-11	3768	2.17	0.41	0
133	SLU 2	-1	244	3666	-9.75	-1.3	0
133	SLU 3	0	-9	3880	2.15	0.43	0
133	SLU 4	0	144	3819	-5	-0.6	0
133	SLU 5	-1	246	3738	-9.78	-1.29	0
133	SLU 6	0	-7	3952	2.12	0.44	0
133	SLU 7	0	146	3891	-5.03	-0.59	0
133	SLU 8	0	-7	3912	2.11	0.43	0
133	SLU 9	0	145	3851	-5.04	-0.6	0
133	SLU 10	-1	253	4239	-9.75	-1.23	0
133	SLU 11	0	0	4453	2.15	0.5	0
133	SLU 12	0	153	4391	-5	-0.53	0
133	SLU 13	-1	254	4311	-9.78	-1.22	0
133	SLU 14	0	2	4524	2.12	0.51	0
133	SLU 15	0	155	4463	-5.03	-0.52	0
133	SLU 16	0	2	4485	2.11	0.5	0
133	SLU 17	0	154	4423	-5.04	-0.53	0
133	SLU 18	0	2	4586	2.17	0.51	0
133	SLU 19	0	155	4525	-4.98	-0.52	0
133	SLU 20	0	4	4658	2.14	0.52	0
133	SLU 21	0	157	4597	-5.01	-0.51	0
133	SLU 22	0	-3	4303	2.2	0.48	0
133	SLU 23	-1	251	4201	-9.73	-1.23	0
133	SLU 24	0	-1	4414	2.18	0.5	0
133	SLU 25	0	152	4353	-4.98	-0.53	0
133	SLU 26	-1	253	4273	-9.76	-1.22	0
133	SLU 27	0	1	4486	2.15	0.51	0
133	SLU 28	0	153	4425	-5.01	-0.52	0
133	SLU 29	0	0	4446	2.14	0.5	0
133	SLU 30	0	153	4385	-5.02	-0.53	0
133	SLU 31	-1	260	4774	-9.72	-1.16	0
133	SLU 32	0	8	4987	2.18	0.57	0
133	SLU 33	0	161	4926	-4.97	-0.46	0
133	SLU 34	-1	262	4845	-9.75	-1.15	0
133	SLU 35	0	9	5059	2.15	0.57	0
133	SLU 36	0	162	4998	-5	-0.45	0
133	SLU 37	0	9	5019	2.14	0.57	0
133	SLU 38	0	162	4958	-5.01	-0.46	0
133	SLU 39	0	10	5121	2.2	0.58	0
133	SLU 40	0	162	5060	-4.95	-0.45	0
133	SLU 41	0	11	5193	2.17	0.59	0
133	SLU 42	0	164	5132	-4.98	-0.44	0
133	SLU 43	0	-16	4716	2.81	0.51	0
133	SLU 44	-1	238	4614	-9.11	-1.2	0
133	SLU 45	0	-14	4827	2.79	0.53	0
133	SLU 46	0	138	4766	-4.36	-0.5	0
133	SLU 47	-1	240	4685	-9.14	-1.19	0
133	SLU 48	0	-13	4899	2.76	0.54	0
133	SLU 49	0	140	4838	-4.39	-0.49	0
133	SLU 50	0	-13	4859	2.75	0.53	0
133	SLU 51	0	140	4798	-4.4	-0.5	0
133	SLU 52	-1	247	5186	-9.11	-1.13	0
133	SLU 53	0	-5	5400	2.79	0.6	0
133	SLU 54	0	147	5339	-4.36	-0.43	0
133	SLU 55	-1	249	5258	-9.14	-1.12	0
133	SLU 56	0	-4	5472	2.76	0.61	0
133	SLU 57	0	149	5410	-4.39	-0.42	0
133	SLU 58	0	-4	5432	2.75	0.6	0
133	SLU 59	0	149	5371	-4.4	-0.43	0
133	SLU 60	0	-4	5534	2.81	0.61	0
133	SLU 61	0	149	5473	-4.34	-0.42	0
133	SLU 62	0	-2	5605	2.78	0.62	0
133	SLU 63	0	151	5544	-4.37	-0.41	0
133	SLU 64	0	-9	5250	2.84	0.58	0
133	SLU 65	-1	246	5148	-9.08	-1.13	0
133	SLU 66	0	-7	5362	2.82	0.6	0
133	SLU 67	0	146	5301	-4.34	-0.43	0
133	SLU 68	-1	247	5220	-9.11	-1.12	0
133	SLU 69	0	-5	5433	2.79	0.61	0
133	SLU 70	0	147	5372	-4.37	-0.42	0

Nodo	Cont.	Reazione a traslazione			Reazione a rotazione		
Ind.	N.br.	x	y	z	x	y	z
133	SLU 71	0	-6	5394	2.78	0.6	0
133	SLU 72	0	147	5333	-4.37	-0.43	0
133	SLU 73	-1	255	5721	-9.08	-1.06	0
133	SLU 74	1	2	5934	2.82	0.67	0
133	SLU 75	0	155	5873	-4.33	-0.36	0
133	SLU 76	-1	256	5793	-9.11	-1.05	0
133	SLU 77	1	4	6006	2.79	0.68	0
133	SLU 78	0	156	5945	-4.36	-0.35	0
133	SLU 79	1	3	5966	2.78	0.67	0
133	SLU 80	0	156	5905	-4.37	-0.36	0
133	SLU 81	1	4	6068	2.84	0.68	0
133	SLU 82	0	157	6007	-4.31	-0.35	0
133	SLU 83	1	6	6140	2.81	0.69	0
133	SLU 84	0	158	6079	-4.34	-0.34	0
133	SLE RA 1	0	-8	3921	2.18	0.43	0
133	SLE RA 2	-1	161	3853	-5.77	-0.71	0
133	SLE RA 3	0	-7	3995	2.16	0.44	0
133	SLE RA 4	0	95	3955	-2.61	-0.24	0
133	SLE RA 5	-1	162	3901	-5.79	-0.7	0
133	SLE RA 6	0	-6	4043	2.14	0.45	0
133	SLE RA 7	0	96	4003	-2.63	-0.23	0
133	SLE RA 8	0	-6	4017	2.14	0.44	0
133	SLE RA 9	0	96	3976	-2.63	-0.24	0
133	SLE RA 10	-1	167	4235	-5.77	-0.66	0
133	SLE RA 11	0	-1	4377	2.16	0.49	0
133	SLE RA 12	0	101	4336	-2.6	-0.19	0
133	SLE RA 13	-1	168	4283	-5.79	-0.66	0
133	SLE RA 14	0	0	4425	2.15	0.49	0
133	SLE RA 15	0	102	4384	-2.62	-0.19	0
133	SLE RA 16	0	0	4399	2.14	0.49	0
133	SLE RA 17	0	101	4358	-2.63	-0.2	0
133	SLE RA 18	0	0	4466	2.18	0.5	0
133	SLE RA 19	0	102	4426	-2.59	-0.19	0
133	SLE RA 20	0	1	4514	2.16	0.5	0
133	SLE RA 21	0	103	4474	-2.61	-0.18	0
133	SLE FR 1	0	-8	3921	2.18	0.43	0
133	SLE FR 2	0	25	3907	0.59	0.2	0
133	SLE FR 3	0	-8	3940	2.17	0.44	0
133	SLE FR 4	0	28	4071	0.59	0.22	0
133	SLE FR 5	0	-5	4104	2.17	0.45	0
133	SLE FR 6	0	-4	4194	2.18	0.47	0
133	SLE QP 1	0	-8	3921	2.18	0.43	0
133	SLE QP 2	0	-6	4085	2.18	0.45	0
133	SLD 1	5	29	4078	-16.49	4.83	0
133	SLD 2	5	29	4078	-16.49	4.83	0
133	SLD 3	7	-409	3996	3.77	7.08	0
133	SLD 4	7	-409	3996	3.77	7.08	0
133	SLD 5	-2	670	4207	-34.15	-1.64	0
133	SLD 6	-2	670	4207	-34.15	-1.64	0
133	SLD 7	6	-792	3934	33.39	5.85	0
133	SLD 8	6	-792	3934	33.39	5.85	0
133	SLD 9	-5	780	4236	-29.03	-4.94	0
133	SLD 10	-5	780	4236	-29.03	-4.94	0
133	SLD 11	2	-682	3962	38.51	2.54	0
133	SLD 12	2	-682	3962	38.51	2.54	0
133	SLD 13	-6	397	4173	0.58	-6.18	0
133	SLD 14	-6	397	4173	0.58	-6.18	0
133	SLD 15	-4	-41	4091	20.85	-3.93	0
133	SLD 16	-4	-41	4091	20.85	-3.93	0
133	SLV 1	11	64	4072	-42.26	10.9	0.01
133	SLV 2	11	64	4072	-42.26	10.9	0.01
133	SLV 3	17	-965	3875	5.29	16.62	0
133	SLV 4	17	-965	3875	5.29	16.62	0
133	SLV 5	-5	1576	4379	-83.27	-5.08	0.01
133	SLV 6	-5	1576	4379	-83.27	-5.08	0.01
133	SLV 7	14	-1854	3724	75.23	13.97	0
133	SLV 8	14	-1854	3724	75.23	13.97	0
133	SLV 9	-13	1842	4446	-70.87	-13.07	0
133	SLV 10	-13	1842	4446	-70.87	-13.07	0
133	SLV 11	5	-1587	3790	87.62	5.99	-0.01
133	SLV 12	5	-1587	3790	87.62	5.99	-0.01
133	SLV 13	-16	953	4294	-0.93	-15.71	0
133	SLV 14	-16	953	4294	-0.93	-15.71	0
133	SLV 15	-10	-76	4097	46.62	-10	-0.01
133	SLV 16	-10	-76	4097	46.62	-10	-0.01
134	SLU 1	-1	660	1805	-27.41	-1.17	0
134	SLU 2	0	709	1825	-29.48	-0.05	0
134	SLU 3	-1	684	1843	-28.42	-1.22	0
134	SLU 4	0	714	1856	-29.67	-0.54	0
134	SLU 5	0	725	1851	-30.15	-0.08	0
134	SLU 6	-1	701	1869	-29.08	-1.25	0
134	SLU 7	0	730	1881	-30.33	-0.58	0
134	SLU 8	-1	692	1856	-28.73	-1.24	0
134	SLU 9	0	722	1869	-29.98	-0.56	0
134	SLU 10	0	808	1981	-33.58	-0.22	0
134	SLU 11	-1	784	1999	-32.51	-1.39	0
134	SLU 12	0	813	2012	-33.76	-0.72	0
134	SLU 13	0	824	2007	-34.24	-0.26	0
134	SLU 14	-1	800	2025	-33.17	-1.42	0
134	SLU 15	0	829	2037	-34.42	-0.75	0
134	SLU 16	-1	791	2012	-32.82	-1.41	0

Nodo	Cont.	Reazione a traslazione			Reazione a rotazione		
Ind.	N.br.	x	y	z	x	y	z
134	SLU 17	0	821	2025	-34.07	-0.74	0
134	SLU 18	-1	802	2028	-33.25	-1.42	0
134	SLU 19	0	831	2040	-34.5	-0.74	0
134	SLU 20	-1	818	2054	-33.91	-1.45	0
134	SLU 21	0	847	2066	-35.16	-0.78	0
134	SLU 22	-1	756	1954	-31.35	-1.34	0
134	SLU 23	0	805	1975	-33.43	-0.22	0
134	SLU 24	-1	780	1993	-32.37	-1.38	0
134	SLU 25	0	810	2005	-33.62	-0.71	0
134	SLU 26	0	821	2000	-34.1	-0.25	0
134	SLU 27	-1	796	2018	-33.03	-1.41	0
134	SLU 28	0	826	2031	-34.28	-0.74	0
134	SLU 29	-1	788	2006	-32.68	-1.4	0
134	SLU 30	0	817	2018	-33.93	-0.73	0
134	SLU 31	0	904	2131	-37.52	-0.39	0
134	SLU 32	-1	880	2149	-36.46	-1.55	0
134	SLU 33	0	909	2161	-37.71	-0.88	0
134	SLU 34	0	920	2157	-38.19	-0.42	0
134	SLU 35	-1	896	2174	-37.12	-1.59	0
134	SLU 36	0	925	2187	-38.37	-0.91	0
134	SLU 37	-1	887	2162	-36.77	-1.57	0
134	SLU 38	0	917	2174	-38.02	-0.9	0
134	SLU 39	-1	898	2177	-37.2	-1.58	0
134	SLU 40	0	927	2190	-38.45	-0.91	0
134	SLU 41	-1	914	2203	-37.86	-1.61	0
134	SLU 42	0	943	2215	-39.11	-0.94	0
134	SLU 43	-1	825	2295	-34.27	-1.47	0
134	SLU 44	0	874	2316	-36.35	-0.35	0
134	SLU 45	-1	850	2334	-35.29	-1.51	0
134	SLU 46	0	879	2346	-36.54	-0.84	0
134	SLU 47	0	890	2341	-37.01	-0.38	0
134	SLU 48	-1	866	2359	-35.95	-1.55	0
134	SLU 49	0	895	2371	-37.2	-0.87	0
134	SLU 50	-1	857	2347	-35.6	-1.53	0
134	SLU 51	0	887	2359	-36.85	-0.86	0
134	SLU 52	0	974	2472	-40.44	-0.52	0
134	SLU 53	-1	949	2490	-39.38	-1.68	0
134	SLU 54	-1	978	2502	-40.63	-1.01	0
134	SLU 55	0	990	2497	-41.11	-0.55	0
134	SLU 56	-1	965	2515	-40.04	-1.72	0
134	SLU 57	-1	995	2528	-41.29	-1.04	0
134	SLU 58	-1	957	2503	-39.69	-1.7	0
134	SLU 59	-1	986	2515	-40.94	-1.03	0
134	SLU 60	-1	967	2518	-40.12	-1.71	0
134	SLU 61	-1	996	2530	-41.37	-1.04	0
134	SLU 62	-1	983	2544	-40.78	-1.74	0
134	SLU 63	-1	1013	2556	-42.03	-1.07	0
134	SLU 64	-1	921	2445	-38.22	-1.63	0
134	SLU 65	0	970	2465	-40.3	-0.51	0
134	SLU 66	-1	945	2483	-39.24	-1.68	0
134	SLU 67	-1	975	2495	-40.49	-1	0
134	SLU 68	0	986	2491	-40.96	-0.54	0
134	SLU 69	-1	961	2509	-39.9	-1.71	0
134	SLU 70	-1	991	2521	-41.15	-1.04	0
134	SLU 71	-1	953	2496	-39.55	-1.7	0
134	SLU 72	-1	982	2508	-40.79	-1.02	0
134	SLU 73	0	1069	2621	-44.39	-0.68	0
134	SLU 74	-1	1045	2639	-43.33	-1.85	0
134	SLU 75	-1	1074	2651	-44.58	-1.18	0
134	SLU 76	0	1085	2647	-45.05	-0.71	0
134	SLU 77	-1	1061	2665	-43.99	-1.88	0
134	SLU 78	-1	1090	2677	-45.24	-1.21	0
134	SLU 79	-1	1052	2652	-43.64	-1.87	0
134	SLU 80	-1	1082	2664	-44.88	-1.2	0
134	SLU 81	-1	1063	2668	-44.07	-1.88	0
134	SLU 82	-1	1092	2680	-45.31	-1.2	0
134	SLU 83	-1	1079	2693	-44.73	-1.91	0
134	SLU 84	-1	1108	2706	-45.98	-1.24	0
134	SLE RA 1	-1	687	1848	-28.53	-1.22	0
134	SLE RA 2	0	720	1861	-29.92	-0.47	0
134	SLE RA 3	-1	704	1873	-29.21	-1.25	0
134	SLE RA 4	0	723	1881	-30.04	-0.8	0
134	SLE RA 5	0	731	1878	-30.36	-0.49	0
134	SLE RA 6	-1	714	1890	-29.65	-1.27	0
134	SLE RA 7	0	734	1898	-30.48	-0.82	0
134	SLE RA 8	-1	709	1882	-29.42	-1.26	0
134	SLE RA 9	0	728	1890	-30.25	-0.81	0
134	SLE RA 10	0	786	1965	-32.65	-0.59	0
134	SLE RA 11	-1	770	1977	-31.94	-1.36	0
134	SLE RA 12	0	790	1985	-32.77	-0.92	0
134	SLE RA 13	0	797	1982	-33.09	-0.61	0
134	SLE RA 14	-1	781	1994	-32.38	-1.39	0
134	SLE RA 15	-1	800	2003	-33.21	-0.94	0
134	SLE RA 16	-1	775	1986	-32.14	-1.38	0
134	SLE RA 17	-1	795	1994	-32.98	-0.93	0
134	SLE RA 18	-1	782	1996	-32.43	-1.38	0
134	SLE RA 19	-1	802	2004	-33.26	-0.93	0
134	SLE RA 20	-1	793	2013	-32.87	-1.4	0
134	SLE RA 21	-1	812	2022	-33.7	-0.96	0
134	SLE FR 1	-1	687	1848	-28.53	-1.22	0
134	SLE FR 2	-1	694	1850	-28.81	-1.07	0

Nodo	Cont.	Reazione a traslazione			Reazione a rotazione		
Ind.	N.br.	x	y	z	x	y	z
134	SLE FR 3	-1	692	1854	-28.71	-1.23	0
134	SLE FR 4	-1	722	1895	-29.98	-1.12	0
134	SLE FR 5	-1	720	1899	-29.88	-1.28	0
134	SLE FR 6	-1	735	1922	-30.48	-1.3	0
134	SLE QP 1	-1	687	1848	-28.53	-1.22	0
134	SLE QP 2	-1	716	1892	-29.7	-1.27	0
134	SLD 1	5	719	1698	-30.01	16.9	0
134	SLD 2	5	719	1698	-30.01	16.9	0
134	SLD 3	10	264	1412	-10.76	23.62	0
134	SLD 4	10	264	1412	-10.76	23.62	0
134	SLD 5	-7	1407	2269	-58.99	-6.02	0
134	SLD 6	-7	1407	2269	-58.99	-6.02	0
134	SLD 7	10	-110	1313	5.17	16.4	0
134	SLD 8	10	-110	1313	5.17	16.4	0
134	SLD 9	-12	1542	2471	-64.58	-18.93	0
134	SLD 10	-12	1542	2471	-64.58	-18.93	0
134	SLD 11	5	24	1516	-0.42	3.48	0
134	SLD 12	5	24	1516	-0.42	3.48	0
134	SLD 13	-12	1167	2373	-48.65	-26.16	0
134	SLD 14	-12	1167	2373	-48.65	-26.16	0
134	SLD 15	-7	712	2086	-29.4	-19.43	0
134	SLD 16	-7	712	2086	-29.4	-19.43	0
134	SLV 1	14	721	1445	-30.29	43.76	0.01
134	SLV 2	14	721	1445	-30.29	43.76	0.01
134	SLV 3	26	-341	776	14.62	60.93	0.01
134	SLV 4	26	-341	776	14.62	60.93	0.01
134	SLV 5	-16	2328	2773	-97.99	-13.81	0.01
134	SLV 6	-16	2328	2773	-97.99	-13.81	0.01
134	SLV 7	27	-1212	542	51.7	43.44	0
134	SLV 8	27	-1212	542	51.7	43.44	0
134	SLV 9	-28	2644	3242	-111.11	-45.97	0
134	SLV 10	-28	2644	3242	-111.11	-45.97	0
134	SLV 11	14	-897	1011	38.58	11.27	-0.01
134	SLV 12	14	-897	1011	38.58	11.27	-0.01
134	SLV 13	-28	1772	3009	-74.02	-63.47	-0.01
134	SLV 14	-28	1772	3009	-74.02	-63.47	-0.01
134	SLV 15	-15	710	2340	-29.12	-46.29	-0.01
134	SLV 16	-15	710	2340	-29.12	-46.29	-0.01
135	SLU 1	7	-342	4459	17.71	4.75	-0.01
135	SLU 2	7	-349	4422	18.01	4.73	-0.01
135	SLU 3	7	-348	4607	18.07	4.92	-0.01
135	SLU 4	7	-352	4585	18.25	4.91	-0.01
135	SLU 5	7	-353	4527	18.25	4.85	-0.01
135	SLU 6	7	-352	4712	18.3	5.04	-0.01
135	SLU 7	7	-356	4690	18.48	5.03	-0.01
135	SLU 8	7	-350	4669	18.18	4.99	-0.01
135	SLU 9	7	-354	4647	18.37	4.98	-0.01
135	SLU 10	8	-393	5123	20.37	5.54	-0.01
135	SLU 11	8	-391	5307	20.43	5.73	-0.01
135	SLU 12	8	-396	5286	20.61	5.71	-0.01
135	SLU 13	8	-397	5228	20.61	5.66	-0.01
135	SLU 14	8	-395	5412	20.66	5.84	-0.01
135	SLU 15	8	-399	5391	20.84	5.83	-0.01
135	SLU 16	8	-393	5369	20.54	5.79	-0.01
135	SLU 17	8	-398	5347	20.72	5.78	-0.01
135	SLU 18	8	-404	5459	21.08	5.9	-0.01
135	SLU 19	8	-409	5437	21.26	5.89	-0.01
135	SLU 20	8	-408	5564	21.32	6.02	-0.01
135	SLU 21	8	-412	5542	21.5	6.01	-0.01
135	SLU 22	8	-372	5060	19.45	5.41	-0.01
135	SLU 23	8	-380	5024	19.75	5.39	-0.01
135	SLU 24	8	-378	5209	19.8	5.58	-0.01
135	SLU 25	8	-382	5187	19.98	5.57	-0.01
135	SLU 26	8	-383	5129	19.98	5.51	-0.01
135	SLU 27	8	-382	5314	20.03	5.7	-0.01
135	SLU 28	8	-386	5292	20.21	5.69	-0.01
135	SLU 29	8	-380	5270	19.92	5.65	-0.01
135	SLU 30	8	-384	5248	20.1	5.64	-0.01
135	SLU 31	9	-423	5724	22.11	6.2	-0.01
135	SLU 32	9	-422	5909	22.16	6.39	-0.01
135	SLU 33	9	-426	5887	22.34	6.37	-0.01
135	SLU 34	9	-427	5829	22.34	6.32	-0.01
135	SLU 35	9	-426	6014	22.39	6.5	-0.01
135	SLU 36	9	-430	5992	22.57	6.49	-0.01
135	SLU 37	9	-424	5970	22.28	6.45	-0.01
135	SLU 38	9	-428	5949	22.46	6.44	-0.01
135	SLU 39	9	-435	6061	22.82	6.56	-0.01
135	SLU 40	9	-439	6039	23	6.55	-0.01
135	SLU 41	9	-438	6166	23.05	6.68	-0.01
135	SLU 42	9	-443	6144	23.23	6.67	-0.01
135	SLU 43	8	-434	5590	22.43	5.96	-0.01
135	SLU 44	8	-442	5554	22.73	5.94	-0.01
135	SLU 45	9	-440	5738	22.79	6.12	-0.01
135	SLU 46	9	-444	5717	22.97	6.11	-0.01
135	SLU 47	9	-445	5659	22.97	6.05	-0.01
135	SLU 48	9	-444	5843	23.02	6.24	-0.01
135	SLU 49	9	-448	5822	23.2	6.23	-0.01
135	SLU 50	9	-442	5800	22.9	6.19	-0.01
135	SLU 51	9	-446	5778	23.09	6.18	-0.01
135	SLU 52	10	-485	6254	25.09	6.74	-0.01
135	SLU 53	10	-484	6439	25.15	6.93	-0.01

Nodo	Cont.	Reazione a traslazione			Reazione a rotazione		
Ind.	N.br.	x	y	z	x	y	z
135	SLU 54	10	-488	6417	25.33	6.91	-0.01
135	SLU 55	10	-489	6359	25.33	6.86	-0.01
135	SLU 56	10	-487	6544	25.38	7.04	-0.01
135	SLU 57	10	-492	6522	25.56	7.03	-0.01
135	SLU 58	10	-485	6500	25.26	6.99	-0.01
135	SLU 59	10	-490	6478	25.44	6.98	-0.01
135	SLU 60	10	-497	6590	25.8	7.1	-0.01
135	SLU 61	10	-501	6569	25.98	7.09	-0.01
135	SLU 62	10	-500	6695	26.04	7.22	-0.01
135	SLU 63	10	-505	6674	26.22	7.21	-0.01
135	SLU 64	9	-465	6192	24.17	6.62	-0.01
135	SLU 65	9	-472	6155	24.47	6.6	-0.01
135	SLU 66	10	-470	6340	24.52	6.78	-0.01
135	SLU 67	10	-475	6318	24.7	6.77	-0.01
135	SLU 68	9	-476	6260	24.7	6.71	-0.01
135	SLU 69	10	-474	6445	24.75	6.9	-0.01
135	SLU 70	10	-478	6423	24.93	6.89	-0.01
135	SLU 71	10	-472	6401	24.64	6.85	-0.01
135	SLU 72	10	-477	6380	24.82	6.84	-0.01
135	SLU 73	10	-515	6856	26.83	7.4	-0.02
135	SLU 74	11	-514	7040	26.88	7.59	-0.02
135	SLU 75	11	-518	7019	27.06	7.57	-0.02
135	SLU 76	11	-519	6961	27.06	7.52	-0.02
135	SLU 77	11	-518	7145	27.11	7.7	-0.02
135	SLU 78	11	-522	7124	27.29	7.69	-0.02
135	SLU 79	11	-516	7102	27	7.65	-0.02
135	SLU 80	11	-520	7080	27.18	7.64	-0.02
135	SLU 81	11	-527	7192	27.54	7.76	-0.02
135	SLU 82	11	-531	7170	27.72	7.75	-0.02
135	SLU 83	11	-531	7297	27.77	7.88	-0.02
135	SLU 84	11	-535	7275	27.95	7.87	-0.02
135	SLE RA 1	7	-351	4631	18.21	4.94	-0.01
135	SLE RA 2	7	-356	4606	18.41	4.93	-0.01
135	SLE RA 3	7	-355	4730	18.44	5.05	-0.01
135	SLE RA 4	7	-357	4715	18.56	5.05	-0.01
135	SLE RA 5	7	-358	4676	18.57	5.01	-0.01
135	SLE RA 6	7	-357	4799	18.6	5.13	-0.01
135	SLE RA 7	7	-360	4785	18.72	5.12	-0.01
135	SLE RA 8	7	-356	4770	18.52	5.1	-0.01
135	SLE RA 9	7	-359	4756	18.64	5.09	-0.01
135	SLE RA 10	8	-385	5073	19.98	5.47	-0.01
135	SLE RA 11	8	-384	5196	20.02	5.59	-0.01
135	SLE RA 12	8	-387	5182	20.14	5.58	-0.01
135	SLE RA 13	8	-387	5143	20.14	5.54	-0.01
135	SLE RA 14	8	-386	5266	20.17	5.67	-0.01
135	SLE RA 15	8	-389	5252	20.29	5.66	-0.01
135	SLE RA 16	8	-385	5237	20.1	5.64	-0.01
135	SLE RA 17	8	-388	5223	20.22	5.63	-0.01
135	SLE RA 18	8	-392	5297	20.46	5.71	-0.01
135	SLE RA 19	8	-395	5283	20.58	5.7	-0.01
135	SLE RA 20	8	-395	5367	20.61	5.79	-0.01
135	SLE RA 21	8	-398	5353	20.73	5.78	-0.01
135	SLE FR 1	7	-351	4631	18.21	4.94	-0.01
135	SLE FR 2	7	-352	4626	18.25	4.94	-0.01
135	SLE FR 3	7	-352	4659	18.27	4.97	-0.01
135	SLE FR 4	7	-364	4826	18.92	5.17	-0.01
135	SLE FR 5	7	-364	4859	18.95	5.2	-0.01
135	SLE FR 6	8	-372	4964	19.33	5.33	-0.01
135	SLE QP 1	7	-351	4631	18.21	4.94	-0.01
135	SLE QP 2	7	-363	4831	18.88	5.17	-0.01
135	SLD 1	16	-329	4162	17.24	12.96	-0.02
135	SLD 2	16	-329	4162	17.24	12.96	-0.02
135	SLD 3	18	-794	4334	39.37	14.59	-0.03
135	SLD 4	18	-794	4334	39.37	14.59	-0.03
135	SLD 5	7	352	4369	-15.16	5.03	-0.01
135	SLD 6	7	352	4369	-15.16	5.03	-0.01
135	SLD 7	13	-1197	4943	58.58	10.48	-0.02
135	SLD 8	13	-1197	4943	58.58	10.48	-0.02
135	SLD 9	1	471	4718	-20.82	-0.13	0
135	SLD 10	1	471	4718	-20.82	-0.13	0
135	SLD 11	8	-1078	5293	52.93	5.32	-0.01
135	SLD 12	8	-1078	5293	52.93	5.32	-0.01
135	SLD 13	-3	67	5327	-1.6	-4.25	0
135	SLD 14	-3	67	5327	-1.6	-4.25	0
135	SLD 15	-1	-398	5500	20.52	-2.61	0
135	SLD 16	-1	-398	5500	20.52	-2.61	0
135	SLV 1	28	-277	3273	14.81	23.8	-0.04
135	SLV 2	28	-277	3273	14.81	23.8	-0.04
135	SLV 3	33	-1362	3677	66.44	27.83	-0.05
135	SLV 4	33	-1362	3677	66.44	27.83	-0.05
135	SLV 5	6	1307	3751	-60.64	4.63	-0.01
135	SLV 6	6	1307	3751	-60.64	4.63	-0.01
135	SLV 7	22	-2307	5097	111.45	18.1	-0.03
135	SLV 8	22	-2307	5097	111.45	18.1	-0.03
135	SLV 9	-7	1581	4564	-73.68	-7.75	0.01
135	SLV 10	-7	1581	4564	-73.68	-7.75	0.01
135	SLV 11	8	-2034	5910	98.4	5.71	-0.02
135	SLV 12	8	-2034	5910	98.4	5.71	-0.02
135	SLV 13	-18	635	5984	-28.67	-17.49	0.03
135	SLV 14	-18	635	5984	-28.67	-17.49	0.03
135	SLV 15	-14	-449	6388	22.95	-13.45	0.02

Nodo	Cont.	Reazione a traslazione			Reazione a rotazione		
Ind.	N.br.	x	y	z	x	y	z
135	SLV 16	-14	-449	6388	22.95	-13.45	0.02
136	SLU 1	4	-377	4053	17.25	3.19	0
136	SLU 2	4	-377	4015	17.25	3.21	0
136	SLU 3	5	-387	4172	17.73	3.29	0
136	SLU 4	5	-387	4149	17.73	3.3	0
136	SLU 5	4	-385	4092	17.61	3.27	0
136	SLU 6	5	-394	4250	18.08	3.36	0
136	SLU 7	5	-395	4227	18.08	3.37	0
136	SLU 8	5	-392	4209	17.96	3.32	0
136	SLU 9	5	-392	4186	17.96	3.34	0
136	SLU 10	5	-427	4631	19.62	3.55	0
136	SLU 11	5	-436	4788	20.09	3.64	0
136	SLU 12	5	-436	4765	20.09	3.65	0
136	SLU 13	5	-434	4709	19.97	3.62	0
136	SLU 14	5	-444	4866	20.45	3.71	0
136	SLU 15	5	-444	4843	20.45	3.72	0
136	SLU 16	5	-441	4825	20.33	3.67	0
136	SLU 17	5	-442	4802	20.33	3.68	0
136	SLU 18	5	-447	4934	20.63	3.68	0
136	SLU 19	5	-448	4910	20.63	3.69	0
136	SLU 20	5	-455	5011	20.99	3.75	0
136	SLU 21	5	-455	4988	20.99	3.76	0
136	SLU 22	5	-415	4581	19.1	3.61	0
136	SLU 23	5	-415	4542	19.11	3.63	0
136	SLU 24	5	-425	4700	19.58	3.71	0
136	SLU 25	5	-425	4677	19.58	3.73	0
136	SLU 26	5	-423	4620	19.46	3.7	0
136	SLU 27	5	-432	4777	19.94	3.78	0
136	SLU 28	5	-433	4754	19.94	3.79	0
136	SLU 29	5	-430	4736	19.82	3.75	0
136	SLU 30	5	-430	4713	19.82	3.76	0
136	SLU 31	5	-465	5158	21.47	3.98	0
136	SLU 32	6	-474	5316	21.95	4.06	0
136	SLU 33	6	-474	5293	21.95	4.07	0
136	SLU 34	5	-472	5236	21.83	4.04	0
136	SLU 35	6	-482	5394	22.3	4.13	0
136	SLU 36	6	-482	5370	22.3	4.14	0
136	SLU 37	6	-479	5352	22.18	4.09	0
136	SLU 38	6	-480	5329	22.18	4.1	0
136	SLU 39	6	-485	5461	22.48	4.11	0
136	SLU 40	6	-486	5438	22.49	4.12	0
136	SLU 41	6	-493	5539	22.84	4.17	0
136	SLU 42	6	-493	5516	22.84	4.18	0
136	SLU 43	6	-477	5088	21.79	4	0
136	SLU 44	5	-477	5050	21.79	4.02	0
136	SLU 45	6	-487	5207	22.27	4.1	0
136	SLU 46	6	-487	5184	22.27	4.11	0
136	SLU 47	6	-485	5127	22.15	4.09	0
136	SLU 48	6	-494	5285	22.62	4.17	0
136	SLU 49	6	-495	5262	22.62	4.18	0
136	SLU 50	6	-492	5244	22.5	4.14	0
136	SLU 51	6	-492	5221	22.5	4.15	0
136	SLU 52	6	-527	5666	24.16	4.36	0
136	SLU 53	6	-536	5824	24.63	4.45	0
136	SLU 54	6	-536	5800	24.63	4.46	0
136	SLU 55	6	-534	5744	24.51	4.43	0
136	SLU 56	6	-544	5901	24.99	4.52	0
136	SLU 57	6	-544	5878	24.99	4.53	0
136	SLU 58	6	-541	5860	24.87	4.48	0
136	SLU 59	6	-542	5837	24.87	4.49	0
136	SLU 60	6	-547	5969	25.17	4.49	0
136	SLU 61	6	-548	5946	25.17	4.51	0
136	SLU 62	6	-555	6046	25.53	4.56	0
136	SLU 63	6	-555	6023	25.53	4.57	0
136	SLU 64	6	-515	5616	23.64	4.42	0
136	SLU 65	6	-515	5577	23.65	4.44	0
136	SLU 66	6	-525	5735	24.12	4.53	0
136	SLU 67	6	-525	5712	24.12	4.54	0
136	SLU 68	6	-523	5655	24	4.51	0
136	SLU 69	6	-532	5813	24.48	4.59	0
136	SLU 70	6	-533	5789	24.48	4.61	0
136	SLU 71	6	-530	5771	24.36	4.56	0
136	SLU 72	6	-530	5748	24.36	4.57	0
136	SLU 73	7	-565	6193	26.01	4.79	0
136	SLU 74	7	-574	6351	26.49	4.87	0
136	SLU 75	7	-574	6328	26.49	4.88	0
136	SLU 76	7	-572	6271	26.37	4.85	0
136	SLU 77	7	-582	6429	26.84	4.94	0
136	SLU 78	7	-582	6406	26.84	4.95	0
136	SLU 79	7	-579	6388	26.72	4.91	0
136	SLU 80	7	-580	6364	26.72	4.92	0
136	SLU 81	7	-585	6496	27.02	4.92	0
136	SLU 82	7	-586	6473	27.03	4.93	0
136	SLU 83	7	-593	6574	27.38	4.99	0
136	SLU 84	7	-593	6551	27.38	5	0
136	SLE RA 1	5	-388	4204	17.78	3.31	0
136	SLE RA 2	5	-388	4178	17.78	3.32	0
136	SLE RA 3	5	-394	4283	18.1	3.38	0
136	SLE RA 4	5	-394	4268	18.1	3.39	0
136	SLE RA 5	5	-393	4230	18.02	3.37	0
136	SLE RA 6	5	-399	4335	18.34	3.42	0

Nodo	Cont.	Reazione a traslazione			Reazione a rotazione		
Ind.	N.br.	x	y	z	x	y	z
136	SLE RA 7	5	-400	4320	18.34	3.43	0
136	SLE RA 8	5	-398	4308	18.26	3.4	0
136	SLE RA 9	5	-398	4292	18.26	3.41	0
136	SLE RA 10	5	-421	4589	19.36	3.55	0
136	SLE RA 11	5	-427	4694	19.67	3.61	0
136	SLE RA 12	5	-427	4679	19.68	3.62	0
136	SLE RA 13	5	-426	4641	19.6	3.6	0
136	SLE RA 14	5	-432	4746	19.91	3.65	0
136	SLE RA 15	5	-432	4730	19.91	3.66	0
136	SLE RA 16	5	-431	4718	19.83	3.63	0
136	SLE RA 17	5	-431	4703	19.83	3.64	0
136	SLE RA 18	5	-435	4791	20.03	3.64	0
136	SLE RA 19	5	-435	4775	20.03	3.65	0
136	SLE RA 20	5	-440	4843	20.27	3.68	0
136	SLE RA 21	5	-440	4827	20.27	3.69	0
136	SLE FR 1	5	-388	4204	17.78	3.31	0
136	SLE FR 2	5	-388	4199	17.78	3.31	0
136	SLE FR 3	5	-390	4225	17.88	3.33	0
136	SLE FR 4	5	-402	4375	18.46	3.41	0
136	SLE FR 5	5	-404	4401	18.55	3.43	0
136	SLE FR 6	5	-411	4497	18.91	3.47	0
136	SLE QP 1	5	-388	4204	17.78	3.31	0
136	SLE QP 2	5	-402	4380	18.46	3.41	0
136	SLD 1	15	62	4918	-3.74	12.55	0.01
136	SLD 2	15	62	4918	-3.74	12.55	0.01
136	SLD 3	17	-402	5067	18.56	14.15	0.01
136	SLD 4	17	-402	5067	18.56	14.15	0.01
136	SLD 5	5	442	4315	-22.02	3.73	0
136	SLD 6	5	442	4315	-22.02	3.73	0
136	SLD 7	11	-1107	4813	52.31	9.05	0
136	SLD 8	11	-1107	4813	52.31	9.05	0
136	SLD 9	-2	303	3947	-15.39	-2.24	0
136	SLD 10	-2	303	3947	-15.39	-2.24	0
136	SLD 11	4	-1245	4445	58.94	3.09	0
136	SLD 12	4	-1245	4445	58.94	3.09	0
136	SLD 13	-7	-401	3693	18.36	-7.33	0
136	SLD 14	-7	-401	3693	18.36	-7.33	0
136	SLD 15	-6	-866	3842	40.66	-5.74	0
136	SLD 16	-6	-866	3842	40.66	-5.74	0
136	SLV 1	29	671	5623	-32.94	25.18	0.01
136	SLV 2	29	671	5623	-32.94	25.18	0.01
136	SLV 3	34	-412	5973	19.08	29.08	0.01
136	SLV 4	34	-412	5973	19.08	29.08	0.01
136	SLV 5	5	1564	4223	-75.85	4.03	0.01
136	SLV 6	5	1564	4223	-75.85	4.03	0.01
136	SLV 7	20	-2049	5388	97.53	17.02	0
136	SLV 8	20	-2049	5388	97.53	17.02	0
136	SLV 9	-11	1245	3372	-60.62	-10.21	0
136	SLV 10	-11	1245	3372	-60.62	-10.21	0
136	SLV 11	4	-2367	4537	112.77	2.79	-0.01
136	SLV 12	4	-2367	4537	112.77	2.79	-0.01
136	SLV 13	-24	-391	2787	17.83	-22.27	-0.01
136	SLV 14	-24	-391	2787	17.83	-22.27	-0.01
136	SLV 15	-20	-1475	3137	69.85	-18.37	-0.01
136	SLV 16	-20	-1475	3137	69.85	-18.37	-0.01
137	SLU 1	2	69	952	-1.4	1.45	0.01
137	SLU 2	2	68	946	-1.37	1.55	0.01
137	SLU 3	2	72	966	-1.47	1.48	0.01
137	SLU 4	2	72	963	-1.45	1.54	0.01
137	SLU 5	2	70	956	-1.42	1.57	0.01
137	SLU 6	2	74	976	-1.51	1.5	0.01
137	SLU 7	2	74	972	-1.49	1.56	0.01
137	SLU 8	2	73	971	-1.49	1.49	0.01
137	SLU 9	2	73	968	-1.47	1.55	0.01
137	SLU 10	2	83	1125	-1.68	1.85	0.01
137	SLU 11	2	88	1145	-1.78	1.78	0.01
137	SLU 12	2	87	1142	-1.76	1.84	0.01
137	SLU 13	2	85	1135	-1.73	1.87	0.01
137	SLU 14	2	90	1154	-1.82	1.8	0.01
137	SLU 15	2	89	1151	-1.8	1.86	0.01
137	SLU 16	2	89	1150	-1.8	1.79	0.01
137	SLU 17	2	88	1146	-1.78	1.85	0.01
137	SLU 18	2	91	1207	-1.84	1.87	0.01
137	SLU 19	2	90	1204	-1.83	1.93	0.01
137	SLU 20	2	93	1217	-1.89	1.89	0.01
137	SLU 21	2	92	1213	-1.87	1.95	0.01
137	SLU 22	2	83	1045	-1.7	1.66	0.01
137	SLU 23	2	82	1040	-1.67	1.76	0.01
137	SLU 24	2	87	1059	-1.76	1.69	0.01
137	SLU 25	2	86	1056	-1.75	1.75	0.01
137	SLU 26	2	84	1049	-1.71	1.78	0.01
137	SLU 27	2	89	1069	-1.81	1.71	0.01
137	SLU 28	2	88	1066	-1.79	1.77	0.01
137	SLU 29	2	88	1064	-1.78	1.7	0.01
137	SLU 30	2	87	1061	-1.77	1.76	0.01
137	SLU 31	2	97	1218	-1.98	2.06	0.01
137	SLU 32	2	102	1238	-2.07	1.99	0.01
137	SLU 33	2	101	1235	-2.06	2.05	0.01
137	SLU 34	2	99	1228	-2.02	2.08	0.01
137	SLU 35	2	104	1248	-2.12	2.01	0.01
137	SLU 36	2	103	1244	-2.1	2.07	0.01

Nodo	Cont.	Reazione a traslazione			Reazione a rotazione		
Ind.	N.br.	x	y	z	x	y	z
137	SLU 37	2	103	1243	-2.1	2	0.01
137	SLU 38	2	102	1240	-2.08	2.06	0.01
137	SLU 39	2	105	1300	-2.14	2.08	0.01
137	SLU 40	2	104	1297	-2.12	2.14	0.01
137	SLU 41	2	107	1310	-2.18	2.1	0.01
137	SLU 42	2	106	1307	-2.17	2.16	0.01
137	SLU 43	2	85	1205	-1.72	1.82	0.01
137	SLU 44	2	84	1200	-1.69	1.92	0.01
137	SLU 45	2	88	1219	-1.78	1.85	0.01
137	SLU 46	2	87	1216	-1.77	1.91	0.01
137	SLU 47	2	86	1209	-1.73	1.94	0.01
137	SLU 48	2	90	1229	-1.83	1.87	0.01
137	SLU 49	2	89	1226	-1.81	1.93	0.01
137	SLU 50	2	89	1224	-1.81	1.86	0.01
137	SLU 51	2	88	1221	-1.79	1.92	0.01
137	SLU 52	2	99	1379	-2	2.21	0.01
137	SLU 53	2	103	1398	-2.09	2.14	0.01
137	SLU 54	2	103	1395	-2.08	2.2	0.01
137	SLU 55	2	101	1388	-2.04	2.23	0.01
137	SLU 56	2	105	1408	-2.14	2.16	0.01
137	SLU 57	2	105	1405	-2.12	2.22	0.01
137	SLU 58	2	104	1403	-2.12	2.15	0.01
137	SLU 59	2	104	1400	-2.1	2.21	0.01
137	SLU 60	2	107	1461	-2.16	2.24	0.01
137	SLU 61	2	106	1457	-2.14	2.3	0.01
137	SLU 62	2	109	1470	-2.2	2.26	0.01
137	SLU 63	2	108	1467	-2.19	2.32	0.01
137	SLU 64	2	99	1298	-2.02	2.02	0.01
137	SLU 65	2	98	1293	-1.99	2.12	0.01
137	SLU 66	2	102	1313	-2.08	2.05	0.01
137	SLU 67	2	102	1310	-2.07	2.12	0.01
137	SLU 68	2	100	1303	-2.03	2.14	0.01
137	SLU 69	2	105	1322	-2.13	2.08	0.01
137	SLU 70	2	104	1319	-2.11	2.14	0.01
137	SLU 71	2	103	1318	-2.1	2.06	0.01
137	SLU 72	2	103	1314	-2.09	2.13	0.01
137	SLU 73	3	113	1472	-2.3	2.42	0.01
137	SLU 74	3	118	1492	-2.39	2.35	0.01
137	SLU 75	3	117	1488	-2.38	2.41	0.01
137	SLU 76	3	115	1481	-2.34	2.44	0.01
137	SLU 77	3	120	1501	-2.44	2.37	0.01
137	SLU 78	3	119	1498	-2.42	2.43	0.01
137	SLU 79	3	119	1496	-2.41	2.36	0.01
137	SLU 80	3	118	1493	-2.4	2.42	0.01
137	SLU 81	3	121	1554	-2.46	2.44	0.01
137	SLU 82	3	120	1551	-2.44	2.51	0.01
137	SLU 83	3	123	1563	-2.5	2.47	0.01
137	SLU 84	3	122	1560	-2.49	2.53	0.01
137	SLE RA 1	2	73	978	-1.49	1.51	0.01
137	SLE RA 2	2	72	975	-1.47	1.58	0.01
137	SLE RA 3	2	75	988	-1.53	1.53	0.01
137	SLE RA 4	2	75	986	-1.52	1.57	0.01
137	SLE RA 5	2	74	981	-1.5	1.59	0.01
137	SLE RA 6	2	77	994	-1.56	1.55	0.01
137	SLE RA 7	2	76	992	-1.55	1.59	0.01
137	SLE RA 8	2	76	991	-1.54	1.54	0.01
137	SLE RA 9	2	76	989	-1.53	1.58	0.01
137	SLE RA 10	2	83	1094	-1.67	1.77	0.01
137	SLE RA 11	2	85	1107	-1.74	1.73	0.01
137	SLE RA 12	2	85	1105	-1.72	1.77	0.01
137	SLE RA 13	2	84	1100	-1.7	1.79	0.01
137	SLE RA 14	2	87	1113	-1.77	1.74	0.01
137	SLE RA 15	2	86	1111	-1.75	1.78	0.01
137	SLE RA 16	2	86	1110	-1.75	1.73	0.01
137	SLE RA 17	2	86	1108	-1.74	1.78	0.01
137	SLE RA 18	2	88	1149	-1.78	1.79	0.01
137	SLE RA 19	2	87	1146	-1.77	1.83	0.01
137	SLE RA 20	2	89	1155	-1.81	1.81	0.01
137	SLE RA 21	2	89	1153	-1.8	1.85	0.01
137	SLE FR 1	2	73	978	-1.49	1.51	0.01
137	SLE FR 2	2	73	978	-1.48	1.52	0.01
137	SLE FR 3	2	74	981	-1.5	1.52	0.01
137	SLE FR 4	2	77	1029	-1.57	1.61	0.01
137	SLE FR 5	2	78	1032	-1.59	1.6	0.01
137	SLE FR 6	2	80	1063	-1.63	1.65	0.01
137	SLE QP 1	2	73	978	-1.49	1.51	0.01
137	SLE QP 2	2	78	1029	-1.57	1.59	0.01
137	SLD 1	11	33	990	-0.35	10.31	0.04
137	SLD 2	11	33	990	-0.35	10.31	0.04
137	SLD 3	13	162	1037	-3.85	11.68	0.04
137	SLD 4	13	162	1037	-3.85	11.68	0.04
137	SLD 5	2	-131	947	4.1	2.14	0.01
137	SLD 6	2	-131	947	4.1	2.14	0.01
137	SLD 7	7	299	1102	-7.56	6.69	0.03
137	SLD 8	7	299	1102	-7.56	6.69	0.03
137	SLD 9	-4	-143	956	4.41	-3.5	-0.01
137	SLD 10	-4	-143	956	4.41	-3.5	-0.01
137	SLD 11	1	287	1112	-7.25	1.05	0
137	SLD 12	1	287	1112	-7.25	1.05	0
137	SLD 13	-9	-7	1022	0.7	-8.49	-0.03
137	SLD 14	-9	-7	1022	0.7	-8.49	-0.03

Nodo	Cont.	Reazione a traslazione			Reazione a rotazione		
Ind.	N.br.	x	y	z	x	y	z
137	SLD 15	-8	122	1069	-2.8	-7.12	-0.02
137	SLD 16	-8	122	1069	-2.8	-7.12	-0.02
137	SLV 1	24	-26	937	1.28	22.52	0.08
137	SLV 2	24	-26	937	1.28	22.52	0.08
137	SLV 3	28	276	1047	-6.92	25.84	0.09
137	SLV 4	28	276	1047	-6.92	25.84	0.09
137	SLV 5	3	-412	834	11.71	2.85	0.01
137	SLV 6	3	-412	834	11.71	2.85	0.01
137	SLV 7	15	596	1202	-15.61	13.89	0.05
137	SLV 8	15	596	1202	-15.61	13.89	0.05
137	SLV 9	-12	-441	857	12.46	-10.7	-0.04
137	SLV 10	-12	-441	857	12.46	-10.7	-0.04
137	SLV 11	0	567	1224	-14.86	0.34	0
137	SLV 12	0	567	1224	-14.86	0.34	0
137	SLV 13	-25	-121	1012	3.77	-22.65	-0.08
137	SLV 14	-25	-121	1012	3.77	-22.65	-0.08
137	SLV 15	-21	181	1122	-4.42	-19.33	-0.07
137	SLV 16	-21	181	1122	-4.42	-19.33	-0.07
138	SLU 1	0	-187	3820	13.06	-0.34	0
138	SLU 2	0	119	3716	-0.93	0.09	0
138	SLU 3	0	-190	3935	13.34	-0.35	0
138	SLU 4	0	-6	3872	4.95	-0.09	0
138	SLU 5	0	118	3790	-0.8	0.08	0
138	SLU 6	0	-191	4009	13.47	-0.35	0
138	SLU 7	0	-7	3946	5.07	-0.1	0
138	SLU 8	0	-189	3968	13.32	-0.35	0
138	SLU 9	0	-5	3905	4.92	-0.1	0
138	SLU 10	0	104	4299	0.57	0.04	0
138	SLU 11	0	-205	4518	14.84	-0.39	0
138	SLU 12	0	-21	4456	6.44	-0.14	0
138	SLU 13	0	103	4373	0.7	0.03	0
138	SLU 14	0	-206	4592	14.96	-0.4	0
138	SLU 15	0	-22	4529	6.57	-0.15	0
138	SLU 16	0	-204	4551	14.81	-0.4	0
138	SLU 17	0	-20	4488	6.42	-0.15	0
138	SLU 18	0	-209	4653	15.2	-0.41	0
138	SLU 19	0	-25	4591	6.81	-0.15	0
138	SLU 20	0	-209	4727	15.33	-0.41	0
138	SLU 21	0	-26	4664	6.94	-0.16	0
138	SLU 22	0	-202	4364	14.48	-0.38	0
138	SLU 23	0	104	4259	0.49	0.04	0
138	SLU 24	0	-205	4479	14.76	-0.39	0
138	SLU 25	0	-21	4416	6.37	-0.14	0
138	SLU 26	0	103	4333	0.62	0.03	0
138	SLU 27	0	-206	4553	14.89	-0.4	0
138	SLU 28	0	-22	4490	6.49	-0.15	0
138	SLU 29	0	-204	4512	14.74	-0.4	0
138	SLU 30	0	-20	4449	6.34	-0.14	0
138	SLU 31	0	89	4842	1.99	-0.01	0
138	SLU 32	0	-220	5062	16.26	-0.44	0
138	SLU 33	0	-36	4999	7.86	-0.19	0
138	SLU 34	0	88	4916	2.12	-0.02	0
138	SLU 35	0	-221	5136	16.38	-0.45	0
138	SLU 36	0	-37	5073	7.99	-0.19	0
138	SLU 37	0	-219	5095	16.23	-0.44	0
138	SLU 38	0	-35	5032	7.84	-0.19	0
138	SLU 39	0	-224	5197	16.62	-0.45	0
138	SLU 40	0	-40	5134	8.23	-0.2	0
138	SLU 41	0	-224	5271	16.75	-0.46	0
138	SLU 42	0	-41	5208	8.36	-0.21	0
138	SLU 43	0	-238	4780	16.49	-0.42	0
138	SLU 44	0	68	4676	2.51	0	0
138	SLU 45	0	-241	4895	16.77	-0.43	0
138	SLU 46	0	-57	4832	8.38	-0.18	0
138	SLU 47	0	67	4749	2.63	-0.01	0
138	SLU 48	0	-242	4969	16.9	-0.44	0
138	SLU 49	0	-58	4906	8.5	-0.18	0
138	SLU 50	0	-240	4928	16.75	-0.43	0
138	SLU 51	0	-56	4865	8.35	-0.18	0
138	SLU 52	0	53	5259	4	-0.05	0
138	SLU 53	0	-256	5478	18.27	-0.48	0
138	SLU 54	0	-73	5415	9.87	-0.23	0
138	SLU 55	0	52	5332	4.13	-0.05	0
138	SLU 56	0	-257	5552	18.39	-0.49	0
138	SLU 57	0	-73	5489	10	-0.23	0
138	SLU 58	0	-255	5511	18.24	-0.48	0
138	SLU 59	0	-71	5448	9.85	-0.23	0
138	SLU 60	0	-260	5613	18.63	-0.49	0
138	SLU 61	0	-76	5550	10.24	-0.24	0
138	SLU 62	0	-260	5687	18.76	-0.5	0
138	SLU 63	0	-77	5624	10.37	-0.24	0
138	SLU 64	0	-253	5324	17.91	-0.47	0
138	SLU 65	0	53	5219	3.93	-0.05	0
138	SLU 66	0	-256	5439	18.19	-0.48	0
138	SLU 67	0	-72	5376	9.8	-0.22	0
138	SLU 68	0	52	5293	4.05	-0.05	0
138	SLU 69	0	-257	5512	18.32	-0.48	0
138	SLU 70	0	-73	5450	9.92	-0.23	0
138	SLU 71	0	-255	5471	18.17	-0.48	0
138	SLU 72	0	-71	5409	9.78	-0.23	0
138	SLU 73	0	38	5802	5.42	-0.09	0

Nodo	Cont.	Reazione a traslazione			Reazione a rotazione		
Ind.	N.br.	x	y	z	x	y	z
138	SLU 74	0	-271	6022	19.69	-0.53	0
138	SLU 75	0	-88	5959	11.29	-0.27	0
138	SLU 76	0	37	5876	5.55	-0.1	0
138	SLU 77	0	-272	6095	19.81	-0.53	0
138	SLU 78	0	-88	6033	11.42	-0.28	0
138	SLU 79	0	-270	6054	19.67	-0.53	0
138	SLU 80	0	-86	5992	11.27	-0.28	0
138	SLU 81	0	-275	6157	20.05	-0.54	0
138	SLU 82	0	-91	6094	11.66	-0.28	0
138	SLU 83	0	-275	6230	20.18	-0.54	0
138	SLU 84	0	-92	6168	11.79	-0.29	0
138	SLE RA 1	0	-192	3976	13.47	-0.35	0
138	SLE RA 2	0	12	3906	4.14	-0.07	0
138	SLE RA 3	0	-193	4052	13.65	-0.36	0
138	SLE RA 4	0	-71	4010	8.06	-0.19	0
138	SLE RA 5	0	12	3955	4.23	-0.07	0
138	SLE RA 6	0	-194	4101	13.74	-0.36	0
138	SLE RA 7	0	-71	4060	8.14	-0.19	0
138	SLE RA 8	0	-192	4074	13.64	-0.36	0
138	SLE RA 9	0	-70	4032	8.04	-0.19	0
138	SLE RA 10	0	2	4295	5.14	-0.1	0
138	SLE RA 11	0	-203	4441	14.65	-0.39	0
138	SLE RA 12	0	-81	4399	9.05	-0.22	0
138	SLE RA 13	0	2	4344	5.23	-0.11	0
138	SLE RA 14	0	-204	4490	14.73	-0.39	0
138	SLE RA 15	0	-81	4448	9.14	-0.22	0
138	SLE RA 16	0	-202	4463	14.63	-0.39	0
138	SLE RA 17	0	-80	4421	9.04	-0.22	0
138	SLE RA 18	0	-206	4531	14.89	-0.4	0
138	SLE RA 19	0	-84	4489	9.3	-0.23	0
138	SLE RA 20	0	-206	4580	14.98	-0.4	0
138	SLE RA 21	0	-84	4538	9.38	-0.23	0
138	SLE FR 1	0	-192	3976	13.47	-0.35	0
138	SLE FR 2	0	-151	3962	11.6	-0.29	0
138	SLE FR 3	0	-192	3995	13.5	-0.35	0
138	SLE FR 4	0	-155	4128	12.03	-0.31	0
138	SLE FR 5	0	-196	4162	13.93	-0.37	0
138	SLE FR 6	0	-199	4253	14.18	-0.37	0
138	SLE QP 1	0	-192	3976	13.47	-0.35	0
138	SLE QP 2	0	-196	4142	13.89	-0.36	0
138	SLD 1	7	280	4308	15.39	7.74	0.01
138	SLD 2	7	280	4308	15.39	7.74	0.01
138	SLD 3	3	-155	4363	35.08	3.8	0
138	SLD 4	3	-155	4363	35.08	3.8	0
138	SLD 5	8	606	4107	-15.52	8.05	0
138	SLD 6	8	606	4107	-15.52	8.05	0
138	SLD 7	-6	-843	4293	50.11	-5.09	0
138	SLD 8	-6	-843	4293	50.11	-5.09	0
138	SLD 9	5	451	3991	-22.32	4.37	0
138	SLD 10	5	451	3991	-22.32	4.37	0
138	SLD 11	-9	-998	4177	43.31	-8.77	-0.01
138	SLD 12	-9	-998	4177	43.31	-8.77	-0.01
138	SLD 13	-3	-237	3921	-7.29	-4.52	0
138	SLD 14	-3	-237	3921	-7.29	-4.52	0
138	SLD 15	-8	-672	3977	12.4	-8.46	-0.01
138	SLD 16	-8	-672	3977	12.4	-8.46	-0.01
138	SLV 1	18	928	4512	17.71	19.92	0.02
138	SLV 2	18	928	4512	17.71	19.92	0.02
138	SLV 3	8	-93	4653	63.97	9.85	0.01
138	SLV 4	8	-93	4653	63.97	9.85	0.01
138	SLV 5	21	1690	4040	-55.11	21.01	0.01
138	SLV 6	21	1690	4040	-55.11	21.01	0.01
138	SLV 7	-14	-1713	4508	99.06	-12.59	0
138	SLV 8	-14	-1713	4508	99.06	-12.59	0
138	SLV 9	13	1322	3776	-71.27	11.86	0
138	SLV 10	13	1322	3776	-71.27	11.86	0
138	SLV 11	-22	-2081	4244	82.89	-21.74	-0.01
138	SLV 12	-22	-2081	4244	82.89	-21.74	-0.01
138	SLV 13	-8	-299	3632	-36.18	-10.57	-0.01
138	SLV 14	-8	-299	3632	-36.18	-10.57	-0.01
138	SLV 15	-19	-1320	3772	10.07	-20.65	-0.02
138	SLV 16	-19	-1320	3772	10.07	-20.65	-0.02
139	SLU 1	14	214	5177	-8.57	12.34	0
139	SLU 2	10	294	5112	-12.11	7.21	0
139	SLU 3	14	220	5330	-8.8	12.77	0
139	SLU 4	12	268	5292	-10.92	9.69	0
139	SLU 5	11	296	5213	-12.17	7.48	0
139	SLU 6	15	221	5431	-8.86	13.04	-0.01
139	SLU 7	12	270	5392	-10.98	9.96	0
139	SLU 8	14	217	5378	-8.69	12.89	0
139	SLU 9	12	266	5339	-10.81	9.81	0
139	SLU 10	12	328	5704	-13.45	8.93	0
139	SLU 11	16	253	5923	-10.13	14.49	-0.01
139	SLU 12	14	301	5884	-12.26	11.41	-0.01
139	SLU 13	12	330	5805	-13.5	9.21	-0.01
139	SLU 14	16	255	6023	-10.19	14.76	-0.01
139	SLU 15	14	303	5984	-12.32	11.69	-0.01
139	SLU 16	16	250	5970	-10.02	14.61	-0.01
139	SLU 17	14	299	5931	-12.14	11.53	-0.01
139	SLU 18	16	261	6022	-10.48	14.8	-0.01
139	SLU 19	14	310	5984	-12.6	11.73	-0.01

Nodo	Cont.	Reazione a traslazione			Reazione a rotazione		
Ind.	N.br.	x	y	z	x	y	z
139	SLU 20	17	263	6123	-10.53	15.08	-0.01
139	SLU 21	15	311	6084	-12.66	12	-0.01
139	SLU 22	16	245	5755	-9.84	14.01	-0.01
139	SLU 23	12	326	5691	-13.38	8.88	0
139	SLU 24	16	252	5909	-10.07	14.43	-0.01
139	SLU 25	14	300	5870	-12.2	11.35	-0.01
139	SLU 26	12	328	5791	-13.44	9.15	-0.01
139	SLU 27	16	253	6009	-10.13	14.71	-0.01
139	SLU 28	14	302	5971	-12.26	11.63	-0.01
139	SLU 29	16	249	5956	-9.96	14.56	-0.01
139	SLU 30	14	298	5917	-12.08	11.48	-0.01
139	SLU 31	14	360	6283	-14.72	10.6	-0.01
139	SLU 32	18	285	6501	-11.41	16.16	-0.01
139	SLU 33	16	333	6462	-13.53	13.08	-0.01
139	SLU 34	14	361	6383	-14.78	10.88	-0.01
139	SLU 35	18	287	6601	-11.47	16.43	-0.01
139	SLU 36	16	335	6563	-13.59	13.35	-0.01
139	SLU 37	18	282	6548	-11.29	16.28	-0.01
139	SLU 38	16	331	6509	-13.42	13.2	-0.01
139	SLU 39	18	293	6601	-11.75	16.47	-0.01
139	SLU 40	16	342	6562	-13.87	13.39	-0.01
139	SLU 41	19	295	6701	-11.81	16.75	-0.01
139	SLU 42	16	343	6663	-13.93	13.67	-0.01
139	SLU 43	17	267	6531	-10.7	15.47	-0.01
139	SLU 44	14	348	6467	-14.25	10.34	-0.01
139	SLU 45	18	273	6685	-10.93	15.9	-0.01
139	SLU 46	16	321	6646	-13.06	12.82	-0.01
139	SLU 47	14	349	6567	-14.3	10.61	-0.01
139	SLU 48	18	275	6786	-10.99	16.17	-0.01
139	SLU 49	16	323	6747	-13.12	13.09	-0.01
139	SLU 50	18	270	6732	-10.82	16.02	-0.01
139	SLU 51	16	319	6694	-12.95	12.94	-0.01
139	SLU 52	16	381	7059	-15.58	12.06	-0.01
139	SLU 53	20	306	7277	-12.27	17.62	-0.01
139	SLU 54	18	355	7238	-14.39	14.54	-0.01
139	SLU 55	16	383	7159	-15.64	12.34	-0.01
139	SLU 56	20	308	7378	-12.33	17.89	-0.01
139	SLU 57	18	356	7339	-14.45	14.82	-0.01
139	SLU 58	20	304	7324	-12.15	17.74	-0.01
139	SLU 59	18	352	7286	-14.28	14.66	-0.01
139	SLU 60	20	314	7377	-12.61	17.93	-0.01
139	SLU 61	18	363	7338	-14.74	14.86	-0.01
139	SLU 62	20	316	7478	-12.67	18.21	-0.01
139	SLU 63	18	365	7439	-14.79	15.13	-0.01
139	SLU 64	19	299	7110	-11.98	17.14	-0.01
139	SLU 65	16	379	7045	-15.52	12.01	-0.01
139	SLU 66	20	305	7264	-12.21	17.56	-0.01
139	SLU 67	17	353	7225	-14.33	14.49	-0.01
139	SLU 68	16	381	7146	-15.58	12.28	-0.01
139	SLU 69	20	306	7364	-12.27	17.84	-0.01
139	SLU 70	18	355	7325	-14.39	14.76	-0.01
139	SLU 71	20	302	7311	-12.09	17.69	-0.01
139	SLU 72	18	351	7272	-14.22	14.61	-0.01
139	SLU 73	17	413	7637	-16.85	13.73	-0.01
139	SLU 74	21	338	7856	-13.54	19.29	-0.01
139	SLU 75	19	386	7817	-15.67	16.21	-0.01
139	SLU 76	18	415	7738	-16.91	14.01	-0.01
139	SLU 77	22	340	7956	-13.6	19.56	-0.01
139	SLU 78	20	388	7917	-15.72	16.48	-0.01
139	SLU 79	22	335	7903	-13.43	19.41	-0.01
139	SLU 80	19	384	7864	-15.55	16.33	-0.01
139	SLU 81	22	346	7955	-13.88	19.6	-0.01
139	SLU 82	20	395	7917	-16.01	16.52	-0.01
139	SLU 83	22	348	8056	-13.94	19.88	-0.01
139	SLU 84	20	396	8017	-16.07	16.8	-0.01
139	SLE RA 1	14	223	5342	-8.93	12.82	0
139	SLE RA 2	12	277	5299	-11.29	9.4	0
139	SLE RA 3	15	227	5444	-9.09	13.1	-0.01
139	SLE RA 4	13	259	5419	-10.5	11.05	0
139	SLE RA 5	12	278	5366	-11.33	9.58	0
139	SLE RA 6	15	228	5511	-9.13	13.28	-0.01
139	SLE RA 7	13	260	5486	-10.54	11.23	0
139	SLE RA 8	15	225	5476	-9.01	13.18	-0.01
139	SLE RA 9	13	257	5450	-10.43	11.13	0
139	SLE RA 10	13	299	5694	-12.18	10.55	-0.01
139	SLE RA 11	16	249	5839	-9.98	14.25	-0.01
139	SLE RA 12	14	281	5813	-11.39	12.2	-0.01
139	SLE RA 13	13	300	5761	-12.22	10.73	-0.01
139	SLE RA 14	16	250	5906	-10.02	14.43	-0.01
139	SLE RA 15	15	282	5880	-11.43	12.38	-0.01
139	SLE RA 16	16	247	5871	-9.9	14.33	-0.01
139	SLE RA 17	15	280	5845	-11.32	12.28	-0.01
139	SLE RA 18	16	254	5906	-10.2	14.46	-0.01
139	SLE RA 19	15	287	5880	-11.62	12.41	-0.01
139	SLE RA 20	16	256	5973	-10.24	14.64	-0.01
139	SLE RA 21	15	288	5947	-11.66	12.59	-0.01
139	SLE FR 1	14	223	5342	-8.93	12.82	0
139	SLE FR 2	14	233	5333	-9.41	12.13	0
139	SLE FR 3	14	223	5369	-8.95	12.89	-0.01
139	SLE FR 4	14	243	5502	-9.79	12.63	-0.01
139	SLE FR 5	15	233	5538	-9.33	13.38	-0.01

Nodo	Cont.	Reazione a traslazione			Reazione a rotazione		
Ind.	N.br.	x	y	z	x	y	z
139	SLE FR 6	15	239	5624	-9.57	13.64	-0.01
139	SLE QP 1	14	223	5342	-8.93	12.82	0
139	SLE QP 2	15	232	5511	-9.32	13.31	-0.01
139	SLD 1	34	564	7015	-23.42	32.39	-0.01
139	SLD 2	34	564	7015	-23.42	32.39	-0.01
139	SLD 3	29	29	6695	-0.63	26.94	-0.01
139	SLD 4	29	29	6695	-0.63	26.94	-0.01
139	SLD 5	28	1143	6448	-48.12	27.3	-0.01
139	SLD 6	28	1143	6448	-48.12	27.3	-0.01
139	SLD 7	11	-640	5380	27.86	9.13	0
139	SLD 8	11	-640	5380	27.86	9.13	0
139	SLD 9	18	1105	5642	-46.49	17.48	-0.01
139	SLD 10	18	1105	5642	-46.49	17.48	-0.01
139	SLD 11	1	-679	4574	29.49	-0.68	0
139	SLD 12	1	-679	4574	29.49	-0.68	0
139	SLD 13	1	436	4327	-18.01	-0.32	0
139	SLD 14	1	436	4327	-18.01	-0.32	0
139	SLD 15	-4	-99	4007	4.79	-5.77	0
139	SLD 16	-4	-99	4007	4.79	-5.77	0
139	SLV 1	60	1013	9010	-42.52	58.69	-0.02
139	SLV 2	60	1013	9010	-42.52	58.69	-0.02
139	SLV 3	48	-236	8261	10.66	44.91	-0.01
139	SLV 4	48	-236	8261	10.66	44.91	-0.01
139	SLV 5	48	2360	7697	-99.94	47.82	-0.02
139	SLV 6	48	2360	7697	-99.94	47.82	-0.02
139	SLV 7	5	-1802	5200	77.34	1.89	0
139	SLV 8	5	-1802	5200	77.34	1.89	0
139	SLV 9	24	2266	5822	-95.97	24.73	-0.01
139	SLV 10	24	2266	5822	-95.97	24.73	-0.01
139	SLV 11	-18	-1896	3325	81.31	-21.2	0.01
139	SLV 12	-18	-1896	3325	81.31	-21.2	0.01
139	SLV 13	-18	700	2761	-29.29	-18.29	0
139	SLV 14	-18	700	2761	-29.29	-18.29	0
139	SLV 15	-31	-549	2012	23.89	-32.07	0.01
139	SLV 16	-31	-549	2012	23.89	-32.07	0.01
140	SLU 1	0	-19	4008	1.96	0.31	0
140	SLU 2	0	236	3855	-10.03	-0.91	0
140	SLU 3	0	-17	4131	1.95	0.31	0
140	SLU 4	0	136	4039	-5.25	-0.42	0
140	SLU 5	0	238	3934	-10.07	-0.91	0
140	SLU 6	0	-15	4210	1.91	0.32	0
140	SLU 7	0	138	4118	-5.29	-0.41	0
140	SLU 8	0	-16	4166	1.9	0.31	0
140	SLU 9	0	137	4074	-5.3	-0.42	0
140	SLU 10	0	252	4493	-10.4	-0.87	0
140	SLU 11	0	-2	4769	1.58	0.36	0
140	SLU 12	0	151	4677	-5.62	-0.37	0
140	SLU 13	0	253	4572	-10.43	-0.86	0
140	SLU 14	0	0	4848	1.55	0.37	0
140	SLU 15	0	153	4756	-5.65	-0.37	0
140	SLU 16	0	0	4804	1.54	0.36	0
140	SLU 17	0	153	4712	-5.66	-0.37	0
140	SLU 18	0	3	4919	1.44	0.37	0
140	SLU 19	0	156	4827	-5.76	-0.36	0
140	SLU 20	0	5	4998	1.41	0.38	0
140	SLU 21	0	158	4906	-5.79	-0.36	0
140	SLU 22	0	-7	4602	1.75	0.35	0
140	SLU 23	0	248	4449	-10.25	-0.87	0
140	SLU 24	0	-6	4725	1.73	0.36	0
140	SLU 25	0	147	4633	-5.47	-0.37	0
140	SLU 26	0	249	4527	-10.28	-0.86	0
140	SLU 27	0	-4	4804	1.7	0.37	0
140	SLU 28	0	149	4712	-5.5	-0.37	0
140	SLU 29	0	-4	4760	1.68	0.36	0
140	SLU 30	0	149	4668	-5.52	-0.37	0
140	SLU 31	0	263	5086	-10.62	-0.82	0
140	SLU 32	0	10	5363	1.36	0.41	0
140	SLU 33	0	163	5271	-5.84	-0.32	0
140	SLU 34	0	265	5165	-10.65	-0.82	0
140	SLU 35	0	11	5442	1.33	0.41	0
140	SLU 36	0	164	5350	-5.87	-0.32	0
140	SLU 37	0	11	5398	1.32	0.41	0
140	SLU 38	0	164	5306	-5.88	-0.33	0
140	SLU 39	0	15	5513	1.22	0.42	0
140	SLU 40	0	168	5421	-5.98	-0.31	0
140	SLU 41	0	16	5592	1.19	0.42	0
140	SLU 42	0	169	5500	-6.01	-0.31	0
140	SLU 43	0	-28	5007	2.63	0.38	0
140	SLU 44	0	227	4854	-9.37	-0.84	0
140	SLU 45	0	-27	5130	2.61	0.39	0
140	SLU 46	0	127	5038	-4.59	-0.34	0
140	SLU 47	0	228	4933	-9.4	-0.84	0
140	SLU 48	0	-25	5209	2.58	0.39	0
140	SLU 49	0	128	5117	-4.62	-0.34	0
140	SLU 50	0	-25	5165	2.56	0.39	0
140	SLU 51	0	128	5073	-4.63	-0.34	0
140	SLU 52	0	242	5492	-9.74	-0.79	0
140	SLU 53	0	-11	5768	2.24	0.44	0
140	SLU 54	0	142	5676	-4.96	-0.29	0
140	SLU 55	0	244	5570	-9.77	-0.79	0
140	SLU 56	0	-10	5847	2.21	0.44	0

Nodo	Cont.	Reazione a traslazione			Reazione a rotazione		
Ind.	N.br.	x	y	z	x	y	z
140	SLU 57	0	143	5755	-4.99	-0.29	0
140	SLU 58	0	-10	5803	2.2	0.43	0
140	SLU 59	0	143	5711	-5	-0.3	0
140	SLU 60	0	-6	5918	2.11	0.45	0
140	SLU 61	0	147	5826	-5.09	-0.28	0
140	SLU 62	0	-5	5997	2.07	0.45	0
140	SLU 63	0	148	5905	-5.12	-0.28	0
140	SLU 64	0	-17	5601	2.41	0.43	0
140	SLU 65	0	238	5447	-9.59	-0.79	0
140	SLU 66	0	-15	5724	2.39	0.44	0
140	SLU 67	0	138	5632	-4.81	-0.29	0
140	SLU 68	0	240	5526	-9.62	-0.79	0
140	SLU 69	0	-14	5803	2.36	0.44	0
140	SLU 70	0	139	5711	-4.84	-0.29	0
140	SLU 71	0	-14	5759	2.35	0.44	0
140	SLU 72	0	139	5667	-4.85	-0.3	0
140	SLU 73	0	254	6085	-9.95	-0.74	0
140	SLU 74	0	0	6362	2.03	0.49	0
140	SLU 75	0	153	6270	-5.17	-0.25	0
140	SLU 76	0	255	6164	-9.99	-0.74	0
140	SLU 77	0	2	6441	1.99	0.49	0
140	SLU 78	0	155	6348	-5.2	-0.24	0
140	SLU 79	0	1	6397	1.98	0.48	0
140	SLU 80	0	154	6305	-5.22	-0.25	0
140	SLU 81	0	5	6512	1.89	0.5	0
140	SLU 82	0	158	6420	-5.31	-0.24	0
140	SLU 83	0	7	6591	1.86	0.5	0
140	SLU 84	0	160	6499	-5.34	-0.23	0
140	SLE RA 1	0	-15	4178	1.9	0.32	0
140	SLE RA 2	0	155	4076	-6.1	-0.49	0
140	SLE RA 3	0	-14	4260	1.89	0.33	0
140	SLE RA 4	0	88	4199	-2.91	-0.16	0
140	SLE RA 5	0	156	4128	-6.12	-0.49	0
140	SLE RA 6	0	-13	4313	1.87	0.33	0
140	SLE RA 7	0	89	4251	-2.93	-0.16	0
140	SLE RA 8	0	-13	4283	1.86	0.32	0
140	SLE RA 9	0	89	4222	-2.94	-0.16	0
140	SLE RA 10	0	165	4501	-6.34	-0.46	0
140	SLE RA 11	0	-4	4685	1.65	0.36	0
140	SLE RA 12	0	98	4624	-3.15	-0.13	0
140	SLE RA 13	0	166	4553	-6.36	-0.46	0
140	SLE RA 14	0	-3	4738	1.62	0.36	0
140	SLE RA 15	0	99	4676	-3.17	-0.13	0
140	SLE RA 16	0	-3	4708	1.62	0.36	0
140	SLE RA 17	0	99	4647	-3.18	-0.13	0
140	SLE RA 18	0	-1	4785	1.55	0.36	0
140	SLE RA 19	0	101	4724	-3.25	-0.12	0
140	SLE RA 20	0	0	4838	1.53	0.37	0
140	SLE RA 21	0	102	4777	-3.27	-0.12	0
140	SLE FR 1	0	-15	4178	1.9	0.32	0
140	SLE FR 2	0	19	4158	0.3	0.16	0
140	SLE FR 3	0	-15	4199	1.89	0.32	0
140	SLE FR 4	0	23	4340	0.2	0.17	0
140	SLE FR 5	0	-11	4381	1.79	0.33	0
140	SLE FR 6	0	-8	4482	1.73	0.34	0
140	SLE QP 1	0	-15	4178	1.9	0.32	0
140	SLE QP 2	0	-11	4360	1.8	0.33	0
140	SLD 1	3	24	4251	-16.89	4.02	0.01
140	SLD 2	3	24	4251	-16.89	4.02	0.01
140	SLD 3	6	-408	4344	3.73	6.28	0
140	SLD 4	6	-408	4344	3.73	6.28	0
140	SLD 5	-3	655	4186	-35.08	-1.99	0
140	SLD 6	-3	655	4186	-35.08	-1.99	0
140	SLD 7	6	-786	4497	33.65	5.55	0
140	SLD 8	6	-786	4497	33.65	5.55	0
140	SLD 9	-6	764	4223	-30.05	-4.88	0
140	SLD 10	-6	764	4223	-30.05	-4.88	0
140	SLD 11	3	-678	4535	38.67	2.66	0
140	SLD 12	3	-678	4535	38.67	2.66	0
140	SLD 13	-6	386	4376	-0.14	-5.61	0
140	SLD 14	-6	386	4376	-0.14	-5.61	0
140	SLD 15	-3	-46	4470	20.48	-3.35	0
140	SLD 16	-3	-46	4470	20.48	-3.35	0
140	SLV 1	8	60	4091	-42.68	9.13	0.01
140	SLV 2	8	60	4091	-42.68	9.13	0.01
140	SLV 3	14	-955	4320	5.73	14.84	0.01
140	SLV 4	14	-955	4320	5.73	14.84	0.01
140	SLV 5	-7	1550	3932	-84.97	-5.68	0.01
140	SLV 6	-7	1550	3932	-84.97	-5.68	0.01
140	SLV 7	14	-1834	4695	76.4	13.34	0
140	SLV 8	14	-1834	4695	76.4	13.34	0
140	SLV 9	-14	1812	4025	-72.8	-12.67	0
140	SLV 10	-14	1812	4025	-72.8	-12.67	0
140	SLV 11	8	-1572	4788	88.56	6.35	-0.01
140	SLV 12	8	-1572	4788	88.56	6.35	-0.01
140	SLV 13	-14	933	4400	-2.14	-14.17	-0.01
140	SLV 14	-14	933	4400	-2.14	-14.17	-0.01
140	SLV 15	-7	-82	4629	46.27	-8.46	-0.01
140	SLV 16	-7	-82	4629	46.27	-8.46	-0.01
141	SLU 1	-1	786	2347	-27.87	-1.57	0
141	SLU 2	0	834	2358	-30.04	-0.4	0

Nodo	Cont.	Reazione a traslazione			Reazione a rotazione		
Ind.	N.br.	x	y	z	x	y	z
141	SLU 3	-1	816	2407	-28.93	-1.63	0
141	SLU 4	-1	845	2414	-30.23	-0.93	0
141	SLU 5	0	854	2399	-30.74	-0.45	0
141	SLU 6	-1	836	2448	-29.63	-1.68	0
141	SLU 7	-1	865	2455	-30.93	-0.98	0
141	SLU 8	-1	826	2429	-29.27	-1.66	0
141	SLU 9	-1	855	2435	-30.57	-0.96	0
141	SLU 10	0	955	2601	-34.29	-0.65	0
141	SLU 11	-2	936	2651	-33.18	-1.88	0
141	SLU 12	-1	965	2657	-34.48	-1.18	0
141	SLU 13	0	975	2642	-34.99	-0.69	0
141	SLU 14	-2	956	2691	-33.88	-1.92	0
141	SLU 15	-1	985	2698	-35.18	-1.22	0
141	SLU 16	-2	946	2672	-33.52	-1.9	0
141	SLU 17	-1	975	2678	-34.82	-1.2	0
141	SLU 18	-2	957	2694	-33.94	-1.92	0
141	SLU 19	-1	986	2701	-35.24	-1.22	0
141	SLU 20	-2	977	2735	-34.64	-1.96	0
141	SLU 21	-1	1006	2742	-35.94	-1.26	0
141	SLU 22	-2	901	2580	-31.96	-1.8	0
141	SLU 23	0	950	2591	-34.13	-0.64	0
141	SLU 24	-2	932	2640	-33.03	-1.87	0
141	SLU 25	-1	961	2647	-34.33	-1.17	0
141	SLU 26	0	970	2632	-34.83	-0.68	0
141	SLU 27	-2	952	2681	-33.73	-1.91	0
141	SLU 28	-1	981	2688	-35.03	-1.21	0
141	SLU 29	-2	941	2662	-33.37	-1.89	0
141	SLU 30	-1	971	2668	-34.67	-1.19	0
141	SLU 31	-1	1070	2834	-38.38	-0.88	0
141	SLU 32	-2	1052	2884	-37.28	-2.11	0
141	SLU 33	-1	1081	2890	-38.58	-1.41	0
141	SLU 34	-1	1090	2875	-39.08	-0.92	0
141	SLU 35	-2	1072	2925	-37.98	-2.15	0
141	SLU 36	-1	1101	2931	-39.28	-1.45	0
141	SLU 37	-2	1062	2905	-37.62	-2.14	0
141	SLU 38	-1	1091	2912	-38.92	-1.44	0
141	SLU 39	-2	1073	2928	-38.04	-2.15	0
141	SLU 40	-1	1102	2934	-39.34	-1.45	0
141	SLU 41	-2	1093	2969	-38.74	-2.19	0
141	SLU 42	-1	1122	2975	-40.04	-1.5	0
141	SLU 43	-2	982	2971	-34.82	-1.96	0
141	SLU 44	-1	1030	2982	-36.99	-0.8	0
141	SLU 45	-2	1012	3031	-35.88	-2.02	0
141	SLU 46	-1	1041	3038	-37.18	-1.32	0
141	SLU 47	-1	1050	3023	-37.69	-0.84	0
141	SLU 48	-2	1032	3072	-36.58	-2.07	0
141	SLU 49	-1	1061	3079	-37.88	-1.37	0
141	SLU 50	-2	1022	3053	-36.22	-2.05	0
141	SLU 51	-1	1051	3059	-37.52	-1.35	0
141	SLU 52	-1	1151	3225	-41.24	-1.04	0
141	SLU 53	-2	1132	3275	-40.13	-2.27	0
141	SLU 54	-1	1161	3281	-41.43	-1.57	0
141	SLU 55	-1	1170	3266	-41.94	-1.08	0
141	SLU 56	-2	1152	3316	-40.83	-2.31	0
141	SLU 57	-1	1181	3322	-42.13	-1.61	0
141	SLU 58	-2	1142	3296	-40.47	-2.29	0
141	SLU 59	-1	1171	3303	-41.77	-1.6	0
141	SLU 60	-2	1153	3319	-40.89	-2.31	0
141	SLU 61	-1	1182	3325	-42.19	-1.61	0
141	SLU 62	-2	1173	3359	-41.59	-2.35	0
141	SLU 63	-1	1202	3366	-42.9	-1.65	0
141	SLU 64	-2	1097	3204	-38.92	-2.19	0
141	SLU 65	-1	1146	3215	-41.09	-1.03	0
141	SLU 66	-2	1128	3265	-39.98	-2.26	0
141	SLU 67	-1	1157	3271	-41.28	-1.56	0
141	SLU 68	-1	1166	3256	-41.79	-1.07	0
141	SLU 69	-2	1148	3305	-40.68	-2.3	0
141	SLU 70	-1	1177	3312	-41.98	-1.6	0
141	SLU 71	-2	1137	3286	-40.32	-2.28	0
141	SLU 72	-1	1167	3292	-41.62	-1.58	0
141	SLU 73	-1	1266	3458	-45.34	-1.27	0
141	SLU 74	-2	1248	3508	-44.23	-2.5	0
141	SLU 75	-1	1277	3514	-45.53	-1.8	0
141	SLU 76	-1	1286	3499	-46.04	-1.32	0
141	SLU 77	-2	1268	3549	-44.93	-2.54	0
141	SLU 78	-1	1297	3555	-46.23	-1.84	0
141	SLU 79	-2	1257	3529	-44.57	-2.53	0
141	SLU 80	-1	1287	3536	-45.87	-1.83	0
141	SLU 81	-2	1269	3552	-44.99	-2.54	0
141	SLU 82	-1	1298	3558	-46.29	-1.84	0
141	SLU 83	-2	1289	3593	-45.69	-2.59	0
141	SLU 84	-1	1318	3599	-46.99	-1.89	0
141	SLE RA 1	-1	819	2413	-29.04	-1.64	0
141	SLE RA 2	-1	851	2421	-30.48	-0.86	0
141	SLE RA 3	-1	839	2454	-29.74	-1.68	0
141	SLE RA 4	-1	858	2458	-30.61	-1.21	0
141	SLE RA 5	-1	865	2448	-30.95	-0.89	0
141	SLE RA 6	-1	852	2481	-30.21	-1.71	0
141	SLE RA 7	-1	872	2485	-31.08	-1.24	0
141	SLE RA 8	-1	845	2468	-29.97	-1.7	0
141	SLE RA 9	-1	865	2472	-30.84	-1.23	0

Nodo	Cont.	Reazione a traslazione			Reazione a rotazione		
Ind.	N.br.	x	y	z	x	y	z
141	SLE RA 10	-1	931	2583	-33.32	-1.02	0
141	SLE RA 11	-2	919	2616	-32.58	-1.84	0
141	SLE RA 12	-1	938	2620	-33.45	-1.37	0
141	SLE RA 13	-1	945	2610	-33.78	-1.05	0
141	SLE RA 14	-2	932	2643	-33.05	-1.87	0
141	SLE RA 15	-1	952	2648	-33.91	-1.4	0
141	SLE RA 16	-2	925	2630	-32.8	-1.86	0
141	SLE RA 17	-1	945	2635	-33.67	-1.39	0
141	SLE RA 18	-2	933	2645	-33.09	-1.87	0
141	SLE RA 19	-1	953	2650	-33.95	-1.4	0
141	SLE RA 20	-2	946	2672	-33.55	-1.9	0
141	SLE RA 21	-1	966	2677	-34.42	-1.43	0
141	SLE FR 1	-1	819	2413	-29.04	-1.64	0
141	SLE FR 2	-1	825	2415	-29.33	-1.48	0
141	SLE FR 3	-1	824	2424	-29.22	-1.65	0
141	SLE FR 4	-1	860	2484	-30.54	-1.55	0
141	SLE FR 5	-1	858	2494	-30.44	-1.72	0
141	SLE FR 6	-1	876	2529	-31.06	-1.75	0
141	SLE QP 1	-1	819	2413	-29.04	-1.64	0
141	SLE QP 2	-1	853	2483	-30.25	-1.71	0
141	SLD 1	0	826	2111	-30.59	9.43	0.01
141	SLD 2	0	826	2111	-30.59	9.43	0.01
141	SLD 3	6	351	1798	-10.8	15.92	0.01
141	SLD 4	6	351	1798	-10.8	15.92	0.01
141	SLD 5	-10	1565	2846	-60.38	-8.21	0
141	SLD 6	-10	1565	2846	-60.38	-8.21	0
141	SLD 7	10	-18	1802	5.61	13.43	0
141	SLD 8	10	-18	1802	5.61	13.43	0
141	SLD 9	-13	1724	3164	-66.11	-16.84	0
141	SLD 10	-13	1724	3164	-66.11	-16.84	0
141	SLD 11	7	141	2120	-0.13	4.8	-0.01
141	SLD 12	7	141	2120	-0.13	4.8	-0.01
141	SLD 13	-9	1355	3168	-49.71	-19.33	-0.01
141	SLD 14	-9	1355	3168	-49.71	-19.33	-0.01
141	SLD 15	-3	880	2855	-29.91	-12.84	-0.01
141	SLD 16	-3	880	2855	-29.91	-12.84	-0.01
141	SLV 1	2	789	1626	-30.96	25.88	0.02
141	SLV 2	2	789	1626	-30.96	25.88	0.02
141	SLV 3	17	-320	895	15.23	42.5	0.01
141	SLV 4	17	-320	895	15.23	42.5	0.01
141	SLV 5	-23	2515	3335	-100.53	-18.63	0.01
141	SLV 6	-23	2515	3335	-100.53	-18.63	0.01
141	SLV 7	27	-1180	897	53.45	36.76	0
141	SLV 8	27	-1180	897	53.45	36.76	0
141	SLV 9	-30	2886	4069	-113.96	-40.17	0
141	SLV 10	-30	2886	4069	-113.96	-40.17	0
141	SLV 11	21	-809	1631	40.02	15.22	-0.01
141	SLV 12	21	-809	1631	40.02	15.22	-0.01
141	SLV 13	-20	2026	4071	-75.73	-45.91	-0.01
141	SLV 14	-20	2026	4071	-75.73	-45.91	-0.01
141	SLV 15	-5	917	3340	-29.54	-29.3	-0.02
141	SLV 16	-5	917	3340	-29.54	-29.3	-0.02
142	SLU 1	5	-391	4481	17.39	3.91	-0.01
142	SLU 2	5	-396	4438	17.63	3.9	-0.01
142	SLU 3	5	-399	4638	17.82	4.04	-0.01
142	SLU 4	5	-403	4612	17.96	4.04	-0.01
142	SLU 5	5	-402	4549	17.91	3.99	-0.01
142	SLU 6	5	-405	4748	18.1	4.14	-0.01
142	SLU 7	5	-408	4723	18.24	4.13	-0.01
142	SLU 8	5	-402	4702	17.95	4.1	-0.01
142	SLU 9	5	-405	4676	18.09	4.09	-0.01
142	SLU 10	6	-447	5163	20.01	4.58	-0.01
142	SLU 11	6	-449	5363	20.2	4.72	-0.01
142	SLU 12	6	-453	5337	20.34	4.72	-0.01
142	SLU 13	6	-452	5273	20.29	4.67	-0.01
142	SLU 14	6	-455	5473	20.48	4.81	-0.01
142	SLU 15	6	-458	5447	20.62	4.81	-0.01
142	SLU 16	6	-452	5427	20.33	4.77	-0.01
142	SLU 17	6	-455	5401	20.47	4.77	-0.01
142	SLU 18	7	-462	5517	20.8	4.87	-0.01
142	SLU 19	7	-466	5491	20.94	4.87	-0.01
142	SLU 20	7	-468	5627	21.08	4.97	-0.01
142	SLU 21	7	-471	5601	21.22	4.97	-0.01
142	SLU 22	6	-427	5111	19.19	4.46	-0.01
142	SLU 23	6	-433	5068	19.42	4.45	-0.01
142	SLU 24	6	-436	5268	19.61	4.59	-0.01
142	SLU 25	6	-439	5242	19.75	4.59	-0.01
142	SLU 26	6	-439	5179	19.7	4.55	-0.01
142	SLU 27	6	-441	5378	19.89	4.69	-0.01
142	SLU 28	6	-445	5352	20.03	4.69	-0.01
142	SLU 29	6	-439	5332	19.75	4.65	-0.01
142	SLU 30	6	-442	5306	19.89	4.64	-0.01
142	SLU 31	7	-483	5793	21.81	5.13	-0.01
142	SLU 32	7	-486	5992	22	5.27	-0.01
142	SLU 33	7	-489	5967	22.14	5.27	-0.01
142	SLU 34	7	-489	5903	22.08	5.23	-0.01
142	SLU 35	7	-491	6103	22.27	5.37	-0.01
142	SLU 36	7	-495	6077	22.42	5.36	-0.01
142	SLU 37	7	-489	6057	22.13	5.33	-0.01
142	SLU 38	7	-492	6031	22.27	5.32	-0.01
142	SLU 39	7	-499	6146	22.59	5.43	-0.01

Nodo	Cont.	Reazione a traslazione			Reazione a rotazione		
Ind.	N.br.	x	y	z	x	y	z
142	SLU 40	7	-502	6121	22.73	5.42	-0.01
142	SLU 41	7	-504	6257	22.87	5.52	-0.01
142	SLU 42	7	-508	6231	23.01	5.52	-0.01
142	SLU 43	6	-495	5610	22	4.89	-0.01
142	SLU 44	6	-501	5567	22.23	4.88	-0.01
142	SLU 45	7	-504	5767	22.42	5.02	-0.01
142	SLU 46	7	-507	5741	22.56	5.02	-0.01
142	SLU 47	7	-507	5677	22.51	4.98	-0.01
142	SLU 48	7	-509	5877	22.7	5.12	-0.01
142	SLU 49	7	-513	5851	22.84	5.12	-0.01
142	SLU 50	7	-506	5831	22.56	5.08	-0.01
142	SLU 51	7	-510	5805	22.7	5.07	-0.01
142	SLU 52	7	-551	6291	24.61	5.56	-0.01
142	SLU 53	8	-554	6491	24.8	5.7	-0.01
142	SLU 54	8	-557	6465	24.94	5.7	-0.01
142	SLU 55	8	-557	6402	24.89	5.65	-0.01
142	SLU 56	8	-559	6602	25.08	5.8	-0.01
142	SLU 57	8	-563	6576	25.22	5.79	-0.01
142	SLU 58	8	-556	6555	24.94	5.76	-0.01
142	SLU 59	8	-560	6530	25.08	5.75	-0.01
142	SLU 60	8	-567	6645	25.4	5.86	-0.01
142	SLU 61	8	-570	6619	25.54	5.85	-0.01
142	SLU 62	8	-572	6756	25.68	5.95	-0.01
142	SLU 63	8	-576	6730	25.82	5.95	-0.01
142	SLU 64	7	-532	6240	23.79	5.44	-0.01
142	SLU 65	7	-538	6197	24.03	5.43	-0.01
142	SLU 66	7	-540	6396	24.22	5.58	-0.01
142	SLU 67	7	-544	6370	24.36	5.57	-0.01
142	SLU 68	7	-543	6307	24.31	5.53	-0.01
142	SLU 69	8	-546	6507	24.5	5.67	-0.01
142	SLU 70	8	-550	6481	24.64	5.67	-0.01
142	SLU 71	7	-543	6461	24.35	5.63	-0.01
142	SLU 72	7	-547	6435	24.49	5.63	-0.01
142	SLU 73	8	-588	6921	26.41	6.11	-0.01
142	SLU 74	8	-590	7121	26.6	6.25	-0.01
142	SLU 75	8	-594	7095	26.74	6.25	-0.01
142	SLU 76	8	-593	7032	26.69	6.21	-0.01
142	SLU 77	8	-596	7231	26.88	6.35	-0.01
142	SLU 78	8	-600	7206	27.02	6.35	-0.01
142	SLU 79	8	-593	7185	26.73	6.31	-0.01
142	SLU 80	8	-597	7159	26.87	6.3	-0.01
142	SLU 81	9	-603	7275	27.19	6.41	-0.01
142	SLU 82	9	-607	7249	27.34	6.4	-0.01
142	SLU 83	9	-609	7385	27.47	6.5	-0.01
142	SLU 84	9	-613	7359	27.61	6.5	-0.01
142	SLE RA 1	5	-401	4661	17.91	4.06	-0.01
142	SLE RA 2	5	-405	4633	18.06	4.06	-0.01
142	SLE RA 3	6	-407	4766	18.19	4.15	-0.01
142	SLE RA 4	6	-409	4749	18.28	4.15	-0.01
142	SLE RA 5	5	-409	4706	18.25	4.12	-0.01
142	SLE RA 6	6	-410	4839	18.38	4.22	-0.01
142	SLE RA 7	6	-413	4822	18.47	4.22	-0.01
142	SLE RA 8	6	-409	4809	18.28	4.19	-0.01
142	SLE RA 9	6	-411	4791	18.37	4.19	-0.01
142	SLE RA 10	6	-438	5116	19.65	4.51	-0.01
142	SLE RA 11	6	-440	5249	19.78	4.61	-0.01
142	SLE RA 12	6	-442	5232	19.87	4.6	-0.01
142	SLE RA 13	6	-442	5189	19.84	4.57	-0.01
142	SLE RA 14	6	-444	5323	19.96	4.67	-0.01
142	SLE RA 15	6	-446	5305	20.06	4.67	-0.01
142	SLE RA 16	6	-442	5292	19.87	4.64	-0.01
142	SLE RA 17	6	-444	5274	19.96	4.64	-0.01
142	SLE RA 18	6	-449	5352	20.18	4.71	-0.01
142	SLE RA 19	6	-451	5334	20.27	4.71	-0.01
142	SLE RA 20	6	-452	5425	20.36	4.77	-0.01
142	SLE RA 21	6	-455	5408	20.46	4.77	-0.01
142	SLE FR 1	5	-401	4661	17.91	4.06	-0.01
142	SLE FR 2	5	-402	4656	17.94	4.06	-0.01
142	SLE FR 3	5	-403	4691	17.98	4.09	-0.01
142	SLE FR 4	6	-416	4863	18.62	4.26	-0.01
142	SLE FR 5	6	-417	4898	18.66	4.28	-0.01
142	SLE FR 6	6	-425	5006	19.04	4.39	-0.01
142	SLE QP 1	5	-401	4661	17.91	4.06	-0.01
142	SLE QP 2	6	-415	4868	18.59	4.26	-0.01
142	SLD 1	12	-398	4056	17.58	10.76	-0.01
142	SLD 2	12	-398	4056	17.58	10.76	-0.01
142	SLD 3	15	-860	4334	40.2	12.6	-0.02
142	SLD 4	15	-860	4334	40.2	12.6	-0.02
142	SLD 5	4	291	4203	-16.02	3.42	0
142	SLD 6	4	291	4203	-16.02	3.42	0
142	SLD 7	12	-1250	5130	59.38	9.55	-0.02
142	SLD 8	12	-1250	5130	59.38	9.55	-0.02
142	SLD 9	-1	419	4607	-22.2	-1.04	0
142	SLD 10	-1	419	4607	-22.2	-1.04	0
142	SLD 11	7	-1122	5534	53.2	5.09	-0.01
142	SLD 12	7	-1122	5534	53.2	5.09	-0.01
142	SLD 13	-3	30	5403	-3.03	-4.09	0
142	SLD 14	-3	30	5403	-3.03	-4.09	0
142	SLD 15	-1	-433	5681	19.6	-2.25	0
142	SLD 16	-1	-433	5681	19.6	-2.25	0
142	SLV 1	21	-368	2975	15.96	19.78	-0.02

Nodo	Cont.	Reazione a traslazione			Reazione a rotazione		
Ind.	N.br.	x	y	z	x	y	z
142	SLV 2	21	-368	2975	15.96	19.78	-0.02
142	SLV 3	28	-1447	3626	68.75	24.4	-0.03
142	SLV 4	28	-1447	3626	68.75	24.4	-0.03
142	SLV 5	1	1235	3313	-62.27	1.92	0.01
142	SLV 6	1	1235	3313	-62.27	1.92	0.01
142	SLV 7	22	-2361	5484	113.71	17.29	-0.03
142	SLV 8	22	-2361	5484	113.71	17.29	-0.03
142	SLV 9	-10	1531	4253	-76.53	-8.78	0.02
142	SLV 10	-10	1531	4253	-76.53	-8.78	0.02
142	SLV 11	11	-2066	6424	99.45	6.6	-0.02
142	SLV 12	11	-2066	6424	99.45	6.6	-0.02
142	SLV 13	-16	616	6111	-31.58	-15.88	0.02
142	SLV 14	-16	616	6111	-31.58	-15.88	0.02
142	SLV 15	-10	-463	6762	21.22	-11.27	0
142	SLV 16	-10	-463	6762	21.22	-11.27	0
143	SLU 1	3	-466	3999	21.91	2.6	0
143	SLU 2	3	-466	3955	21.89	2.59	0
143	SLU 3	3	-479	4120	22.58	2.69	0
143	SLU 4	3	-480	4093	22.57	2.68	0
143	SLU 5	3	-476	4032	22.38	2.65	0
143	SLU 6	3	-490	4197	23.07	2.74	0
143	SLU 7	3	-490	4171	23.06	2.73	0
143	SLU 8	3	-486	4154	22.89	2.71	0
143	SLU 9	3	-486	4127	22.88	2.7	0
143	SLU 10	4	-528	4579	24.89	2.91	0
143	SLU 11	4	-541	4744	25.58	3	0
143	SLU 12	4	-542	4718	25.57	2.99	0
143	SLU 13	4	-538	4657	25.38	2.96	0
143	SLU 14	4	-552	4822	26.07	3.06	0
143	SLU 15	4	-552	4795	26.06	3.05	0
143	SLU 16	4	-548	4779	25.89	3.03	0
143	SLU 17	4	-548	4752	25.88	3.02	0
143	SLU 18	4	-554	4891	26.2	3.05	0
143	SLU 19	4	-554	4865	26.18	3.05	0
143	SLU 20	4	-564	4969	26.68	3.11	0
143	SLU 21	4	-564	4942	26.67	3.1	0
143	SLU 22	4	-515	4539	24.38	2.96	0
143	SLU 23	4	-516	4495	24.36	2.95	0
143	SLU 24	4	-529	4660	25.05	3.04	0
143	SLU 25	4	-530	4633	25.04	3.04	0
143	SLU 26	4	-526	4573	24.85	3	0
143	SLU 27	4	-540	4737	25.54	3.1	0
143	SLU 28	4	-540	4711	25.53	3.09	0
143	SLU 29	4	-536	4694	25.36	3.07	0
143	SLU 30	4	-536	4668	25.34	3.06	0
143	SLU 31	4	-578	5120	27.36	3.26	0
143	SLU 32	4	-591	5285	28.05	3.36	0
143	SLU 33	4	-591	5258	28.04	3.35	0
143	SLU 34	4	-588	5197	27.85	3.32	0
143	SLU 35	4	-602	5362	28.54	3.41	0
143	SLU 36	4	-602	5336	28.53	3.4	0
143	SLU 37	4	-598	5319	28.36	3.38	0
143	SLU 38	4	-598	5292	28.34	3.37	0
143	SLU 39	4	-604	5432	28.66	3.41	0
143	SLU 40	4	-604	5405	28.65	3.4	0
143	SLU 41	4	-614	5509	29.15	3.46	0
143	SLU 42	4	-614	5483	29.14	3.46	0
143	SLU 43	4	-588	5013	27.64	3.26	0
143	SLU 44	4	-588	4969	27.62	3.25	0
143	SLU 45	4	-602	5134	28.31	3.35	0
143	SLU 46	4	-602	5107	28.3	3.34	0
143	SLU 47	4	-599	5047	28.1	3.3	0
143	SLU 48	4	-612	5211	28.8	3.4	0
143	SLU 49	4	-613	5185	28.79	3.39	0
143	SLU 50	4	-609	5168	28.61	3.37	0
143	SLU 51	4	-609	5142	28.6	3.36	0
143	SLU 52	4	-650	5594	30.62	3.56	0
143	SLU 53	5	-664	5759	31.31	3.66	0
143	SLU 54	5	-664	5732	31.3	3.65	0
143	SLU 55	4	-661	5671	31.11	3.62	0
143	SLU 56	5	-674	5836	31.8	3.71	0
143	SLU 57	5	-674	5810	31.79	3.71	0
143	SLU 58	5	-671	5793	31.61	3.68	0
143	SLU 59	5	-671	5767	31.6	3.68	0
143	SLU 60	5	-676	5906	31.92	3.71	0
143	SLU 61	5	-677	5879	31.91	3.7	0
143	SLU 62	5	-687	5983	32.41	3.77	0
143	SLU 63	5	-687	5957	32.4	3.76	0
143	SLU 64	5	-638	5553	30.1	3.62	0
143	SLU 65	4	-638	5509	30.08	3.61	0
143	SLU 66	5	-652	5674	30.78	3.7	0
143	SLU 67	5	-652	5648	30.77	3.7	0
143	SLU 68	5	-649	5587	30.57	3.66	0
143	SLU 69	5	-662	5752	31.27	3.76	0
143	SLU 70	5	-662	5725	31.26	3.75	0
143	SLU 71	5	-659	5709	31.08	3.73	0
143	SLU 72	5	-659	5682	31.07	3.72	0
143	SLU 73	5	-700	6134	33.08	3.92	0
143	SLU 74	5	-714	6299	33.78	4.02	0
143	SLU 75	5	-714	6273	33.77	4.01	0
143	SLU 76	5	-711	6212	33.57	3.97	0

Nodo	Cont.	Reazione a traslazione			Reazione a rotazione		
Ind.	N.br.	x	y	z	x	y	z
143	SLU 77	5	-724	6377	34.27	4.07	0
143	SLU 78	5	-724	6350	34.26	4.06	0
143	SLU 79	5	-720	6333	34.08	4.04	0
143	SLU 80	5	-721	6307	34.07	4.03	0
143	SLU 81	5	-726	6446	34.39	4.07	0
143	SLU 82	5	-727	6420	34.38	4.06	0
143	SLU 83	5	-737	6524	34.88	4.12	0
143	SLU 84	5	-737	6497	34.87	4.11	0
143	SLE RA 1	3	-480	4153	22.61	2.71	0
143	SLE RA 2	3	-480	4124	22.6	2.7	0
143	SLE RA 3	3	-489	4234	23.06	2.76	0
143	SLE RA 4	3	-489	4216	23.06	2.76	0
143	SLE RA 5	3	-487	4175	22.93	2.73	0
143	SLE RA 6	4	-496	4285	23.39	2.8	0
143	SLE RA 7	3	-496	4268	23.38	2.79	0
143	SLE RA 8	3	-494	4257	23.27	2.78	0
143	SLE RA 9	3	-494	4239	23.26	2.77	0
143	SLE RA 10	4	-521	4540	24.6	2.91	0
143	SLE RA 11	4	-530	4650	25.06	2.97	0
143	SLE RA 12	4	-530	4633	25.06	2.97	0
143	SLE RA 13	4	-528	4592	24.93	2.94	0
143	SLE RA 14	4	-537	4702	25.39	3.01	0
143	SLE RA 15	4	-537	4684	25.38	3	0
143	SLE RA 16	4	-535	4673	25.27	2.99	0
143	SLE RA 17	4	-535	4655	25.26	2.98	0
143	SLE RA 18	4	-539	4748	25.47	3.01	0
143	SLE RA 19	4	-539	4731	25.46	3	0
143	SLE RA 20	4	-546	4800	25.8	3.04	0
143	SLE RA 21	4	-546	4782	25.79	3.04	0
143	SLE FR 1	3	-480	4153	22.61	2.71	0
143	SLE FR 2	3	-480	4147	22.61	2.7	0
143	SLE FR 3	3	-483	4174	22.75	2.72	0
143	SLE FR 4	3	-498	4326	23.47	2.79	0
143	SLE FR 5	4	-500	4352	23.6	2.81	0
143	SLE FR 6	4	-509	4451	24.04	2.86	0
143	SLE QP 1	3	-480	4153	22.61	2.71	0
143	SLE QP 2	4	-497	4332	23.47	2.8	0
143	SLD 1	11	-9	4917	0.09	10	0
143	SLD 2	11	-9	4917	0.09	10	0
143	SLD 3	12	-475	5159	22.72	11.31	0
143	SLD 4	12	-475	5159	22.72	11.31	0
143	SLD 5	4	355	4140	-17.87	2.97	0
143	SLD 6	4	355	4140	-17.87	2.97	0
143	SLD 7	8	-1197	4947	57.58	7.34	0
143	SLD 8	8	-1197	4947	57.58	7.34	0
143	SLD 9	-1	202	3716	-10.63	-1.75	0
143	SLD 10	-1	202	3716	-10.63	-1.75	0
143	SLD 11	3	-1350	4523	64.82	2.62	0
143	SLD 12	3	-1350	4523	64.82	2.62	0
143	SLD 13	-5	-520	3504	24.22	-5.72	0
143	SLD 14	-5	-520	3504	24.22	-5.72	0
143	SLD 15	-4	-986	3746	46.86	-4.41	0
143	SLD 16	-4	-986	3746	46.86	-4.41	0
143	SLV 1	20	631	5685	-30.65	19.96	0.01
143	SLV 2	20	631	5685	-30.65	19.96	0.01
143	SLV 3	24	-455	6252	22.15	23.16	0
143	SLV 4	24	-455	6252	22.15	23.16	0
143	SLV 5	3	1488	3878	-72.84	3.09	0
143	SLV 6	3	1488	3878	-72.84	3.09	0
143	SLV 7	15	-2132	5767	103.16	13.75	0
143	SLV 8	15	-2132	5767	103.16	13.75	0
143	SLV 9	-8	1137	2896	-56.21	-8.16	0
143	SLV 10	-8	1137	2896	-56.21	-8.16	0
143	SLV 11	4	-2483	4785	119.79	2.5	0
143	SLV 12	4	-2483	4785	119.79	2.5	0
143	SLV 13	-17	-540	2411	24.79	-17.56	0
143	SLV 14	-17	-540	2411	24.79	-17.56	0
143	SLV 15	-13	-1626	2978	77.59	-14.37	-0.01
143	SLV 16	-13	-1626	2978	77.59	-14.37	-0.01
144	SLU 1	0	118	1176	-2.5	0.92	0.01
144	SLU 2	0	116	1167	-2.46	0.99	0.01
144	SLU 3	0	124	1200	-2.63	0.94	0.01
144	SLU 4	0	122	1195	-2.6	0.98	0.01
144	SLU 5	0	119	1183	-2.54	1	0.01
144	SLU 6	0	127	1216	-2.71	0.95	0.01
144	SLU 7	0	126	1210	-2.68	0.99	0.01
144	SLU 8	0	125	1208	-2.67	0.94	0.01
144	SLU 9	0	124	1203	-2.64	0.98	0.01
144	SLU 10	1	139	1387	-2.98	1.16	0.01
144	SLU 11	1	147	1420	-3.15	1.12	0.01
144	SLU 12	1	146	1414	-3.12	1.15	0.01
144	SLU 13	1	143	1403	-3.06	1.17	0.01
144	SLU 14	1	151	1435	-3.23	1.13	0.01
144	SLU 15	1	149	1430	-3.2	1.16	0.01
144	SLU 16	1	149	1428	-3.19	1.12	0.01
144	SLU 17	1	148	1422	-3.16	1.16	0.01
144	SLU 18	1	152	1490	-3.26	1.17	0.01
144	SLU 19	1	150	1485	-3.23	1.21	0.01
144	SLU 20	1	155	1506	-3.34	1.18	0.01
144	SLU 21	1	154	1501	-3.31	1.22	0.01
144	SLU 22	0	142	1310	-3.04	1.05	0.01

Nodo	Cont.	Reazione a traslazione			Reazione a rotazione		
Ind.	N.br.	x	y	z	x	y	z
144	SLU 23	1	140	1301	-2.99	1.11	0.01
144	SLU 24	0	148	1334	-3.16	1.07	0.01
144	SLU 25	1	146	1329	-3.13	1.11	0.01
144	SLU 26	1	144	1317	-3.07	1.13	0.01
144	SLU 27	0	152	1350	-3.25	1.08	0.01
144	SLU 28	1	150	1344	-3.22	1.12	0.01
144	SLU 29	0	150	1342	-3.2	1.07	0.01
144	SLU 30	1	148	1336	-3.17	1.11	0.01
144	SLU 31	1	163	1521	-3.52	1.29	0.01
144	SLU 32	1	171	1554	-3.69	1.24	0.01
144	SLU 33	1	170	1548	-3.66	1.28	0.01
144	SLU 34	1	167	1537	-3.6	1.3	0.01
144	SLU 35	1	175	1569	-3.77	1.26	0.01
144	SLU 36	1	174	1564	-3.74	1.29	0.01
144	SLU 37	1	173	1561	-3.73	1.25	0.01
144	SLU 38	1	172	1556	-3.7	1.29	0.01
144	SLU 39	1	176	1624	-3.79	1.3	0.01
144	SLU 40	1	174	1619	-3.76	1.34	0.01
144	SLU 41	1	179	1640	-3.87	1.31	0.01
144	SLU 42	1	178	1634	-3.84	1.35	0.01
144	SLU 43	1	145	1483	-3.07	1.15	0.01
144	SLU 44	1	143	1474	-3.02	1.22	0.01
144	SLU 45	1	151	1507	-3.2	1.17	0.01
144	SLU 46	1	149	1502	-3.17	1.21	0.01
144	SLU 47	1	147	1490	-3.1	1.23	0.01
144	SLU 48	1	154	1523	-3.28	1.18	0.01
144	SLU 49	1	153	1517	-3.25	1.22	0.01
144	SLU 50	1	152	1515	-3.24	1.18	0.01
144	SLU 51	1	151	1510	-3.21	1.21	0.01
144	SLU 52	1	166	1694	-3.55	1.39	0.01
144	SLU 53	1	174	1727	-3.72	1.35	0.01
144	SLU 54	1	173	1721	-3.69	1.39	0.01
144	SLU 55	1	170	1710	-3.63	1.4	0.01
144	SLU 56	1	178	1743	-3.8	1.36	0.01
144	SLU 57	1	177	1737	-3.77	1.4	0.01
144	SLU 58	1	176	1735	-3.76	1.35	0.01
144	SLU 59	1	175	1729	-3.73	1.39	0.01
144	SLU 60	1	179	1797	-3.82	1.4	0.01
144	SLU 61	1	177	1792	-3.79	1.44	0.01
144	SLU 62	1	182	1813	-3.9	1.42	0.01
144	SLU 63	1	181	1808	-3.87	1.45	0.01
144	SLU 64	1	169	1617	-3.61	1.28	0.01
144	SLU 65	1	167	1608	-3.56	1.35	0.01
144	SLU 66	1	175	1641	-3.73	1.3	0.01
144	SLU 67	1	174	1636	-3.7	1.34	0.01
144	SLU 68	1	171	1624	-3.64	1.36	0.01
144	SLU 69	1	179	1657	-3.81	1.31	0.01
144	SLU 70	1	177	1651	-3.78	1.35	0.01
144	SLU 71	1	177	1649	-3.77	1.3	0.01
144	SLU 72	1	175	1643	-3.74	1.34	0.01
144	SLU 73	1	191	1828	-4.09	1.52	0.01
144	SLU 74	1	198	1861	-4.26	1.48	0.01
144	SLU 75	1	197	1855	-4.23	1.52	0.01
144	SLU 76	1	194	1844	-4.17	1.53	0.01
144	SLU 77	1	202	1876	-4.34	1.49	0.01
144	SLU 78	1	201	1871	-4.31	1.53	0.01
144	SLU 79	1	200	1869	-4.3	1.48	0.01
144	SLU 80	1	199	1863	-4.27	1.52	0.01
144	SLU 81	1	203	1931	-4.36	1.53	0.01
144	SLU 82	1	202	1926	-4.33	1.57	0.01
144	SLU 83	1	207	1947	-4.44	1.54	0.01
144	SLU 84	1	205	1942	-4.41	1.58	0.01
144	SLE RA 1	0	125	1215	-2.66	0.96	0.01
144	SLE RA 2	0	123	1209	-2.63	1	0.01
144	SLE RA 3	0	129	1230	-2.74	0.97	0.01
144	SLE RA 4	0	128	1227	-2.72	1	0.01
144	SLE RA 5	0	126	1219	-2.68	1.01	0.01
144	SLE RA 6	0	131	1241	-2.79	0.98	0.01
144	SLE RA 7	0	130	1237	-2.77	1	0.01
144	SLE RA 8	0	130	1236	-2.77	0.97	0.01
144	SLE RA 9	0	129	1232	-2.75	1	0.01
144	SLE RA 10	1	139	1355	-2.98	1.12	0.01
144	SLE RA 11	1	144	1377	-3.09	1.09	0.01
144	SLE RA 12	1	143	1373	-3.07	1.11	0.01
144	SLE RA 13	1	142	1366	-3.03	1.13	0.01
144	SLE RA 14	1	147	1387	-3.14	1.09	0.01
144	SLE RA 15	1	146	1384	-3.13	1.12	0.01
144	SLE RA 16	1	146	1382	-3.12	1.09	0.01
144	SLE RA 17	1	145	1379	-3.1	1.12	0.01
144	SLE RA 18	1	147	1424	-3.16	1.13	0.01
144	SLE RA 19	1	146	1420	-3.14	1.15	0.01
144	SLE RA 20	1	150	1434	-3.21	1.13	0.01
144	SLE RA 21	1	149	1431	-3.19	1.16	0.01
144	SLE FR 1	0	125	1215	-2.66	0.96	0.01
144	SLE FR 2	0	125	1213	-2.65	0.97	0.01
144	SLE FR 3	0	126	1219	-2.68	0.96	0.01
144	SLE FR 4	0	131	1276	-2.8	1.02	0.01
144	SLE FR 5	0	133	1282	-2.83	1.01	0.01
144	SLE FR 6	0	136	1319	-2.91	1.04	0.01
144	SLE QP 1	0	125	1215	-2.66	0.96	0.01
144	SLE QP 2	0	132	1277	-2.81	1.01	0.01

Nodo	Cont.	Reazione a traslazione			Reazione a rotazione		
Ind.	N.br.	x	y	z	x	y	z
144	SLD 1	7	89	1215	-1.51	8.01	0.05
144	SLD 2	7	89	1215	-1.51	8.01	0.05
144	SLD 3	8	218	1298	-5.38	9.04	0.06
144	SLD 4	8	218	1298	-5.38	9.04	0.06
144	SLD 5	1	-76	1133	3.44	1.55	0.01
144	SLD 6	1	-76	1133	3.44	1.55	0.01
144	SLD 7	4	352	1409	-9.45	4.97	0.03
144	SLD 8	4	352	1409	-9.45	4.97	0.03
144	SLD 9	-3	-89	1146	3.83	-2.96	-0.02
144	SLD 10	-3	-89	1146	3.83	-2.96	-0.02
144	SLD 11	0	339	1422	-9.06	0.46	0
144	SLD 12	0	339	1422	-9.06	0.46	0
144	SLD 13	-7	46	1257	-0.23	-7.02	-0.04
144	SLD 14	-7	46	1257	-0.23	-7.02	-0.04
144	SLD 15	-6	174	1340	-4.1	-6	-0.04
144	SLD 16	-6	174	1340	-4.1	-6	-0.04
144	SLV 1	17	33	1131	0.2	17.85	0.11
144	SLV 2	17	33	1131	0.2	17.85	0.11
144	SLV 3	19	334	1325	-8.87	20.32	0.13
144	SLV 4	19	334	1325	-8.87	20.32	0.13
144	SLV 5	2	-355	939	11.84	2.32	0.02
144	SLV 6	2	-355	939	11.84	2.32	0.02
144	SLV 7	9	650	1586	-18.38	10.54	0.07
144	SLV 8	9	650	1586	-18.38	10.54	0.07
144	SLV 9	-9	-386	969	12.76	-8.52	-0.05
144	SLV 10	-9	-386	969	12.76	-8.52	-0.05
144	SLV 11	-1	618	1616	-17.46	-0.3	0
144	SLV 12	-1	618	1616	-17.46	-0.3	0
144	SLV 13	-18	-71	1230	3.25	-18.3	-0.11
144	SLV 14	-18	-71	1230	3.25	-18.3	-0.11
144	SLV 15	-16	231	1424	-5.81	-15.84	-0.1
144	SLV 16	-16	231	1424	-5.81	-15.84	-0.1
145	SLU 1	0	-150	3813	3.09	-0.15	0
145	SLU 2	0	163	3642	-11.35	0.11	0
145	SLU 3	0	-153	3933	3.12	-0.15	0
145	SLU 4	0	35	3830	-5.55	0	0
145	SLU 5	0	162	3719	-11.38	0.1	0
145	SLU 6	0	-153	4009	3.09	-0.15	0
145	SLU 7	0	35	3906	-5.58	0	0
145	SLU 8	0	-151	3966	3.03	-0.15	0
145	SLU 9	0	36	3864	-5.63	0	0
145	SLU 10	0	156	4262	-11.33	0.09	0
145	SLU 11	0	-159	4552	3.14	-0.17	0
145	SLU 12	0	28	4449	-5.52	-0.02	0
145	SLU 13	0	155	4338	-11.36	0.09	0
145	SLU 14	0	-160	4628	3.11	-0.17	0
145	SLU 15	0	28	4526	-5.55	-0.02	0
145	SLU 16	0	-158	4586	3.05	-0.17	0
145	SLU 17	0	30	4483	-5.61	-0.02	0
145	SLU 18	0	-160	4698	3.13	-0.17	0
145	SLU 19	0	28	4595	-5.54	-0.02	0
145	SLU 20	0	-160	4775	3.1	-0.17	0
145	SLU 21	0	27	4672	-5.57	-0.02	0
145	SLU 22	0	-159	4386	3.21	-0.16	0
145	SLU 23	0	154	4215	-11.24	0.09	0
145	SLU 24	0	-162	4506	3.23	-0.17	0
145	SLU 25	0	26	4403	-5.43	-0.02	0
145	SLU 26	0	153	4292	-11.27	0.09	0
145	SLU 27	0	-162	4582	3.2	-0.17	0
145	SLU 28	0	26	4479	-5.47	-0.02	0
145	SLU 29	0	-160	4539	3.14	-0.17	0
145	SLU 30	0	28	4437	-5.52	-0.02	0
145	SLU 31	0	147	4835	-11.21	0.07	0
145	SLU 32	0	-168	5125	3.25	-0.18	0
145	SLU 33	0	19	5022	-5.41	-0.03	0
145	SLU 34	0	146	4911	-11.24	0.07	0
145	SLU 35	0	-169	5201	3.22	-0.19	0
145	SLU 36	0	19	5099	-5.44	-0.04	0
145	SLU 37	0	-167	5159	3.17	-0.19	0
145	SLU 38	0	21	5056	-5.5	-0.04	0
145	SLU 39	0	-169	5271	3.24	-0.19	0
145	SLU 40	0	19	5169	-5.43	-0.04	0
145	SLU 41	0	-169	5348	3.21	-0.19	0
145	SLU 42	0	18	5245	-5.46	-0.04	0
145	SLU 43	0	-192	4761	3.98	-0.18	0
145	SLU 44	0	120	4590	-10.46	0.07	0
145	SLU 45	0	-195	4880	4.01	-0.19	0
145	SLU 46	0	-7	4777	-4.66	-0.04	0
145	SLU 47	0	120	4666	-10.49	0.07	0
145	SLU 48	0	-195	4957	3.98	-0.19	0
145	SLU 49	0	-7	4854	-4.69	-0.04	0
145	SLU 50	0	-193	4914	3.92	-0.19	0
145	SLU 51	0	-6	4811	-4.74	-0.04	0
145	SLU 52	0	114	5209	-10.44	0.05	0
145	SLU 53	0	-201	5499	4.03	-0.2	0
145	SLU 54	0	-14	5397	-4.63	-0.05	0
145	SLU 55	0	113	5286	-10.47	0.05	0
145	SLU 56	0	-202	5576	4	-0.21	0
145	SLU 57	0	-14	5473	-4.66	-0.06	0
145	SLU 58	0	-200	5533	3.94	-0.21	0
145	SLU 59	0	-12	5431	-4.72	-0.06	0

Nodo	Cont.	Reazione a traslazione			Reazione a rotazione		
Ind.	N.br.	x	y	z	x	y	z
145	SLU 60	0	-202	5646	4.02	-0.21	0
145	SLU 61	0	-14	5543	-4.65	-0.06	0
145	SLU 62	0	-203	5722	3.98	-0.21	0
145	SLU 63	0	-15	5619	-4.68	-0.06	0
145	SLU 64	0	-201	5334	4.1	-0.2	0
145	SLU 65	0	112	5163	-10.35	0.05	0
145	SLU 66	0	-204	5453	4.12	-0.2	0
145	SLU 67	0	-16	5351	-4.54	-0.05	0
145	SLU 68	0	111	5239	-10.38	0.05	0
145	SLU 69	0	-204	5530	4.09	-0.21	0
145	SLU 70	0	-16	5427	-4.58	-0.06	0
145	SLU 71	0	-202	5487	4.03	-0.21	0
145	SLU 72	0	-15	5384	-4.63	-0.06	0
145	SLU 73	0	105	5782	-10.32	0.03	0
145	SLU 74	0	-210	6072	4.14	-0.22	0
145	SLU 75	0	-23	5970	-4.52	-0.07	0
145	SLU 76	0	104	5859	-10.35	0.03	0
145	SLU 77	0	-211	6149	4.11	-0.22	0
145	SLU 78	0	-23	6046	-4.55	-0.07	0
145	SLU 79	0	-209	6106	4.06	-0.22	0
145	SLU 80	0	-21	6004	-4.61	-0.07	0
145	SLU 81	0	-211	6219	4.13	-0.23	0
145	SLU 82	0	-23	6116	-4.54	-0.07	0
145	SLU 83	0	-211	6295	4.1	-0.23	0
145	SLU 84	0	-24	6193	-4.57	-0.08	0
145	SLE RA 1	0	-153	3977	3.13	-0.15	0
145	SLE RA 2	0	56	3863	-6.5	0.02	0
145	SLE RA 3	0	-154	4057	3.14	-0.15	0
145	SLE RA 4	0	-29	3988	-2.63	-0.05	0
145	SLE RA 5	0	55	3914	-6.52	0.02	0
145	SLE RA 6	0	-155	4108	3.12	-0.15	0
145	SLE RA 7	0	-30	4039	-2.65	-0.05	0
145	SLE RA 8	0	-154	4079	3.08	-0.15	0
145	SLE RA 9	0	-28	4011	-2.69	-0.05	0
145	SLE RA 10	0	51	4276	-6.49	0.01	0
145	SLE RA 11	0	-159	4469	3.16	-0.16	0
145	SLE RA 12	0	-34	4401	-2.62	-0.06	0
145	SLE RA 13	0	51	4327	-6.51	0	0
145	SLE RA 14	0	-159	4520	3.14	-0.17	0
145	SLE RA 15	0	-34	4452	-2.64	-0.07	0
145	SLE RA 16	0	-158	4492	3.1	-0.17	0
145	SLE RA 17	0	-33	4424	-2.68	-0.07	0
145	SLE RA 18	0	-159	4567	3.15	-0.17	0
145	SLE RA 19	0	-34	4499	-2.63	-0.07	0
145	SLE RA 20	0	-160	4618	3.13	-0.17	0
145	SLE RA 21	0	-34	4550	-2.65	-0.07	0
145	SLE FR 1	0	-153	3977	3.13	-0.15	0
145	SLE FR 2	0	-111	3954	1.2	-0.12	0
145	SLE FR 3	0	-153	3998	3.12	-0.15	0
145	SLE FR 4	0	-113	4131	1.21	-0.12	0
145	SLE FR 5	0	-155	4174	3.12	-0.16	0
145	SLE FR 6	0	-156	4272	3.14	-0.16	0
145	SLE QP 1	0	-153	3977	3.13	-0.15	0
145	SLE QP 2	0	-155	4154	3.13	-0.16	0
145	SLD 1	5	351	4408	-19.83	6.04	0.01
145	SLD 2	5	351	4408	-19.83	6.04	0.01
145	SLD 3	0	-91	4581	1.04	2.27	0.01
145	SLD 4	0	-91	4581	1.04	2.27	0.01
145	SLD 5	9	667	3967	-35.4	7.42	0
145	SLD 6	9	667	3967	-35.4	7.42	0
145	SLD 7	-7	-806	4545	34.15	-5.15	0.01
145	SLD 8	-7	-806	4545	34.15	-5.15	0.01
145	SLD 9	7	496	3763	-27.88	4.84	0
145	SLD 10	7	496	3763	-27.88	4.84	0
145	SLD 11	-9	-977	4341	41.66	-7.74	0
145	SLD 12	-9	-977	4341	41.66	-7.74	0
145	SLD 13	0	-219	3727	5.23	-2.58	-0.01
145	SLD 14	0	-219	3727	5.23	-2.58	-0.01
145	SLD 15	-5	-661	3901	26.09	-6.35	0
145	SLD 16	-5	-661	3901	26.09	-6.35	0
145	SLV 1	13	1037	4724	-51.13	15.38	0.01
145	SLV 2	13	1037	4724	-51.13	15.38	0.01
145	SLV 3	1	0	5138	-2.17	5.72	0.02
145	SLV 4	1	0	5138	-2.17	5.72	0.02
145	SLV 5	22	1775	3697	-87.39	19.16	0
145	SLV 6	22	1775	3697	-87.39	19.16	0
145	SLV 7	-18	-1681	5077	75.79	-13.05	0.01
145	SLV 8	-18	-1681	5077	75.79	-13.05	0.01
145	SLV 9	18	1371	3231	-69.52	12.74	-0.01
145	SLV 10	18	1371	3231	-69.52	12.74	-0.01
145	SLV 11	-22	-2085	4611	93.66	-19.47	0
145	SLV 12	-22	-2085	4611	93.66	-19.47	0
145	SLV 13	-1	-310	3171	8.44	-6.03	-0.02
145	SLV 14	-1	-310	3171	8.44	-6.03	-0.02
145	SLV 15	-13	-1347	3584	57.39	-15.69	-0.01
145	SLV 16	-13	-1347	3584	57.39	-15.69	-0.01
146	SLU 1	12	157	5147	-7.18	11.63	-0.01
146	SLU 2	11	249	5067	-11.09	7.93	-0.01
146	SLU 3	13	162	5302	-7.37	12.04	-0.01
146	SLU 4	12	217	5254	-9.72	9.82	-0.01
146	SLU 5	11	250	5169	-11.14	8.19	-0.01

Nodo	Cont.	Reazione a traslazione			Reazione a rotazione		
Ind.	N.br.	x	y	z	x	y	z
146	SLU 6	13	163	5404	-7.43	12.3	-0.01
146	SLU 7	12	218	5356	-9.78	10.08	-0.01
146	SLU 8	13	160	5351	-7.28	12.15	-0.01
146	SLU 9	12	215	5303	-9.63	9.93	-0.01
146	SLU 10	12	276	5658	-12.26	9.59	-0.01
146	SLU 11	15	188	5893	-8.54	13.69	-0.01
146	SLU 12	14	243	5845	-10.89	11.48	-0.01
146	SLU 13	13	277	5760	-12.31	9.85	-0.01
146	SLU 14	15	190	5995	-8.59	13.96	-0.01
146	SLU 15	14	245	5947	-10.94	11.74	-0.01
146	SLU 16	15	186	5942	-8.45	13.81	-0.01
146	SLU 17	14	241	5894	-10.8	11.59	-0.01
146	SLU 18	15	195	5992	-8.84	14	-0.01
146	SLU 19	14	250	5944	-11.19	11.78	-0.01
146	SLU 20	15	196	6093	-8.89	14.26	-0.01
146	SLU 21	14	251	6046	-11.24	12.04	-0.01
146	SLU 22	14	182	5725	-8.28	13.23	-0.01
146	SLU 23	12	274	5645	-12.19	9.53	-0.01
146	SLU 24	15	187	5880	-8.48	13.64	-0.01
146	SLU 25	13	242	5832	-10.83	11.42	-0.01
146	SLU 26	13	275	5747	-12.25	9.8	-0.01
146	SLU 27	15	188	5982	-8.53	13.9	-0.01
146	SLU 28	14	243	5934	-10.88	11.69	-0.01
146	SLU 29	15	185	5929	-8.39	13.76	-0.01
146	SLU 30	14	240	5881	-10.74	11.54	-0.01
146	SLU 31	14	300	6237	-13.36	11.19	-0.01
146	SLU 32	16	213	6472	-9.64	15.3	-0.01
146	SLU 33	15	268	6424	-11.99	13.08	-0.01
146	SLU 34	14	302	6339	-13.41	11.46	-0.01
146	SLU 35	17	215	6574	-9.7	15.56	-0.01
146	SLU 36	16	270	6526	-12.04	13.35	-0.01
146	SLU 37	16	211	6520	-9.55	15.42	-0.01
146	SLU 38	15	266	6472	-11.9	13.2	-0.01
146	SLU 39	17	220	6570	-9.94	15.6	-0.01
146	SLU 40	16	275	6522	-12.29	13.38	-0.01
146	SLU 41	17	221	6672	-10	15.86	-0.01
146	SLU 42	16	276	6624	-12.35	13.65	-0.01
146	SLU 43	16	196	6493	-8.95	14.56	-0.01
146	SLU 44	14	288	6413	-12.86	10.87	-0.01
146	SLU 45	16	201	6647	-9.15	14.97	-0.01
146	SLU 46	15	256	6600	-11.5	12.76	-0.01
146	SLU 47	14	289	6514	-12.92	11.13	-0.01
146	SLU 48	16	202	6749	-9.2	15.24	-0.01
146	SLU 49	15	257	6701	-11.55	13.02	-0.01
146	SLU 50	16	199	6696	-9.06	15.09	-0.01
146	SLU 51	15	254	6648	-11.41	12.87	-0.01
146	SLU 52	15	314	7004	-14.03	12.53	-0.01
146	SLU 53	18	227	7239	-10.31	16.63	-0.01
146	SLU 54	17	282	7191	-12.66	14.42	-0.01
146	SLU 55	16	315	7106	-14.08	12.79	-0.01
146	SLU 56	18	228	7341	-10.37	16.9	-0.01
146	SLU 57	17	283	7293	-12.72	14.68	-0.01
146	SLU 58	18	225	7288	-10.22	16.75	-0.01
146	SLU 59	17	280	7240	-12.57	14.53	-0.01
146	SLU 60	18	234	7337	-10.62	16.93	-0.01
146	SLU 61	17	289	7289	-12.96	14.72	-0.01
146	SLU 62	18	235	7439	-10.67	17.2	-0.01
146	SLU 63	17	290	7391	-13.02	14.98	-0.01
146	SLU 64	17	221	7071	-10.05	16.17	-0.01
146	SLU 65	15	313	6991	-13.97	12.47	-0.01
146	SLU 66	18	226	7226	-10.25	16.58	-0.01
146	SLU 67	17	281	7178	-12.6	14.36	-0.01
146	SLU 68	16	314	7093	-14.02	12.74	-0.01
146	SLU 69	18	227	7328	-10.31	16.84	-0.01
146	SLU 70	17	282	7280	-12.65	14.62	-0.01
146	SLU 71	18	224	7275	-10.16	16.69	-0.01
146	SLU 72	17	279	7227	-12.51	14.48	-0.01
146	SLU 73	17	339	7582	-15.13	14.13	-0.01
146	SLU 74	20	252	7817	-11.42	18.24	-0.01
146	SLU 75	18	307	7769	-13.77	16.02	-0.01
146	SLU 76	17	340	7684	-15.19	14.4	-0.01
146	SLU 77	20	253	7919	-11.47	18.5	-0.01
146	SLU 78	19	308	7871	-13.82	16.28	-0.01
146	SLU 79	20	250	7866	-11.33	18.35	-0.01
146	SLU 80	19	305	7818	-13.68	16.14	-0.01
146	SLU 81	20	259	7916	-11.72	18.54	-0.01
146	SLU 82	19	314	7868	-14.07	16.32	-0.01
146	SLU 83	20	260	8018	-11.77	18.8	-0.01
146	SLU 84	19	315	7970	-14.12	16.58	-0.01
146	SLE RA 1	13	165	5312	-7.49	12.08	-0.01
146	SLE RA 2	12	226	5259	-10.1	9.62	-0.01
146	SLE RA 3	13	168	5415	-7.62	12.36	-0.01
146	SLE RA 4	12	204	5383	-9.19	10.88	-0.01
146	SLE RA 5	12	227	5327	-10.14	9.8	-0.01
146	SLE RA 6	13	168	5483	-7.66	12.53	-0.01
146	SLE RA 7	13	205	5451	-9.22	11.05	-0.01
146	SLE RA 8	13	166	5448	-7.56	12.44	-0.01
146	SLE RA 9	13	203	5416	-9.13	10.96	-0.01
146	SLE RA 10	13	243	5653	-10.88	10.73	-0.01
146	SLE RA 11	14	185	5810	-8.4	13.46	-0.01
146	SLE RA 12	14	222	5778	-9.97	11.99	-0.01

Nodo	Cont.	Reazione a traslazione			Reazione a rotazione		
Ind.	N.br.	x	y	z	x	y	z
146	SLE RA 13	13	244	5721	-10.91	10.9	-0.01
146	SLE RA 14	15	186	5878	-8.44	13.64	-0.01
146	SLE RA 15	14	223	5846	-10	12.16	-0.01
146	SLE RA 16	14	184	5842	-8.34	13.54	-0.01
146	SLE RA 17	14	221	5810	-9.91	12.06	-0.01
146	SLE RA 18	15	190	5875	-8.6	13.66	-0.01
146	SLE RA 19	14	226	5843	-10.17	12.19	-0.01
146	SLE RA 20	15	191	5943	-8.64	13.84	-0.01
146	SLE RA 21	14	227	5911	-10.2	12.36	-0.01
146	SLE FR 1	13	165	5312	-7.49	12.08	-0.01
146	SLE FR 2	13	177	5301	-8.01	11.59	-0.01
146	SLE FR 3	13	165	5339	-7.51	12.15	-0.01
146	SLE FR 4	13	184	5470	-8.35	12.07	-0.01
146	SLE FR 5	14	172	5508	-7.84	12.63	-0.01
146	SLE FR 6	14	177	5594	-8.05	12.87	-0.01
146	SLE QP 1	13	165	5312	-7.49	12.08	-0.01
146	SLE QP 2	13	172	5481	-7.82	12.56	-0.01
146	SLD 1	27	504	6928	-22.06	27.66	-0.01
146	SLD 2	27	504	6928	-22.06	27.66	-0.01
146	SLD 3	22	-38	6688	1.08	23.26	-0.01
146	SLD 4	22	-38	6688	1.08	23.26	-0.01
146	SLD 5	24	1094	6279	-47.18	23.75	-0.01
146	SLD 6	24	1094	6279	-47.18	23.75	-0.01
146	SLD 7	10	-713	5479	29.93	9.11	0
146	SLD 8	10	-713	5479	29.93	9.11	0
146	SLD 9	17	1057	5483	-45.58	16.01	-0.01
146	SLD 10	17	1057	5483	-45.58	16.01	-0.01
146	SLD 11	3	-750	4683	31.53	1.37	0
146	SLD 12	3	-750	4683	31.53	1.37	0
146	SLD 13	4	382	4274	-16.72	1.85	0
146	SLD 14	4	382	4274	-16.72	1.85	0
146	SLD 15	0	-160	4034	6.41	-2.54	0
146	SLD 16	0	-160	4034	6.41	-2.54	0
146	SLV 1	45	954	8845	-41.31	48.46	-0.02
146	SLV 2	45	954	8845	-41.31	48.46	-0.02
146	SLV 3	34	-311	8283	12.67	37.35	-0.02
146	SLV 4	34	-311	8283	12.67	37.35	-0.02
146	SLV 5	39	2325	7343	-99.73	40.19	-0.02
146	SLV 6	39	2325	7343	-99.73	40.19	-0.02
146	SLV 7	3	-1891	5469	80.18	3.14	0
146	SLV 8	3	-1891	5469	80.18	3.14	0
146	SLV 9	24	2235	5494	-95.83	21.98	-0.01
146	SLV 10	24	2235	5494	-95.83	21.98	-0.01
146	SLV 11	-12	-1981	3619	84.08	-15.07	0.01
146	SLV 12	-12	-1981	3619	84.08	-15.07	0.01
146	SLV 13	-7	655	2679	-28.31	-12.23	0.01
146	SLV 14	-7	655	2679	-28.31	-12.23	0.01
146	SLV 15	-18	-610	2117	25.66	-23.35	0.01
146	SLV 16	-18	-610	2117	25.66	-23.35	0.01
147	SLU 1	0	-65	4336	5.61	0.16	0
147	SLU 2	0	187	4122	-6.46	-0.6	0
147	SLU 3	0	-65	4473	5.7	0.16	0
147	SLU 4	0	87	4345	-1.54	-0.3	0
147	SLU 5	0	188	4210	-6.42	-0.61	0
147	SLU 6	0	-64	4561	5.74	0.16	0
147	SLU 7	0	87	4433	-1.5	-0.3	0
147	SLU 8	0	-64	4512	5.69	0.15	0
147	SLU 9	0	88	4384	-1.55	-0.3	0
147	SLU 10	0	201	4845	-6.43	-0.58	0
147	SLU 11	0	-52	5196	5.73	0.18	0
147	SLU 12	0	100	5068	-1.51	-0.28	0
147	SLU 13	0	201	4933	-6.39	-0.59	0
147	SLU 14	0	-51	5285	5.77	0.18	0
147	SLU 15	0	100	5156	-1.47	-0.28	0
147	SLU 16	0	-51	5235	5.72	0.17	0
147	SLU 17	0	101	5107	-1.52	-0.28	0
147	SLU 18	0	-46	5369	5.65	0.19	0
147	SLU 19	0	105	5241	-1.59	-0.27	0
147	SLU 20	0	-46	5457	5.69	0.19	0
147	SLU 21	0	106	5329	-1.55	-0.27	0
147	SLU 22	0	-57	5006	5.8	0.18	0
147	SLU 23	0	195	4792	-6.26	-0.58	0
147	SLU 24	0	-57	5144	5.9	0.18	0
147	SLU 25	0	95	5015	-1.34	-0.28	0
147	SLU 26	0	196	4881	-6.22	-0.59	0
147	SLU 27	0	-56	5232	5.94	0.18	0
147	SLU 28	0	95	5103	-1.3	-0.28	0
147	SLU 29	0	-56	5183	5.88	0.17	0
147	SLU 30	0	96	5054	-1.36	-0.28	0
147	SLU 31	0	209	5516	-6.23	-0.56	0
147	SLU 32	0	-44	5867	5.93	0.2	0
147	SLU 33	0	108	5739	-1.31	-0.26	0
147	SLU 34	0	209	5604	-6.19	-0.57	0
147	SLU 35	0	-43	5955	5.97	0.2	0
147	SLU 36	0	108	5827	-1.27	-0.26	0
147	SLU 37	0	-43	5906	5.91	0.19	0
147	SLU 38	0	109	5777	-1.33	-0.26	0
147	SLU 39	0	-38	6040	5.85	0.21	0
147	SLU 40	0	113	5911	-1.39	-0.25	0
147	SLU 41	0	-38	6128	5.89	0.21	0
147	SLU 42	0	114	5999	-1.35	-0.25	0

Nodo	Cont.	Reazione a traslazione			Reazione a rotazione		
Ind.	N.br.	x	y	z	x	y	z
147	SLU 43	0	-87	5407	7.22	0.2	0
147	SLU 44	0	165	5193	-4.84	-0.56	0
147	SLU 45	0	-87	5544	7.32	0.2	0
147	SLU 46	0	64	5416	0.07	-0.26	0
147	SLU 47	0	166	5281	-4.8	-0.57	0
147	SLU 48	0	-87	5632	7.36	0.2	0
147	SLU 49	0	65	5504	0.12	-0.26	0
147	SLU 50	0	-86	5583	7.3	0.19	0
147	SLU 51	0	65	5454	0.06	-0.26	0
147	SLU 52	0	178	5916	-4.81	-0.54	0
147	SLU 53	0	-74	6267	7.35	0.22	0
147	SLU 54	0	77	6139	0.1	-0.24	0
147	SLU 55	0	179	6004	-4.77	-0.54	0
147	SLU 56	0	-73	6355	7.39	0.22	0
147	SLU 57	0	78	6227	0.15	-0.24	0
147	SLU 58	0	-73	6306	7.33	0.21	0
147	SLU 59	0	78	6178	0.09	-0.24	0
147	SLU 60	0	-69	6440	7.27	0.23	0
147	SLU 61	0	83	6311	0.02	-0.23	0
147	SLU 62	0	-68	6528	7.31	0.23	0
147	SLU 63	0	83	6400	0.06	-0.23	0
147	SLU 64	0	-79	6077	7.42	0.22	0
147	SLU 65	0	173	5863	-4.65	-0.54	0
147	SLU 66	0	-79	6215	7.51	0.22	0
147	SLU 67	0	72	6086	0.27	-0.24	0
147	SLU 68	0	174	5951	-4.61	-0.54	0
147	SLU 69	0	-78	6303	7.55	0.22	0
147	SLU 70	0	73	6174	0.31	-0.24	0
147	SLU 71	0	-78	6254	7.5	0.21	0
147	SLU 72	0	73	6125	0.26	-0.24	0
147	SLU 73	0	186	6586	-4.62	-0.52	0
147	SLU 74	0	-66	6938	7.54	0.24	0
147	SLU 75	0	86	6809	0.3	-0.22	0
147	SLU 76	0	187	6675	-4.58	-0.52	0
147	SLU 77	0	-65	7026	7.58	0.24	0
147	SLU 78	0	86	6898	0.34	-0.22	0
147	SLU 79	0	-65	6977	7.53	0.23	0
147	SLU 80	0	86	6848	0.29	-0.22	0
147	SLU 81	0	-61	7111	7.46	0.25	0
147	SLU 82	0	91	6982	0.22	-0.21	0
147	SLU 83	0	-60	7199	7.5	0.25	0
147	SLU 84	0	91	7070	0.26	-0.21	0
147	SLE RA 1	0	-63	4527	5.66	0.17	0
147	SLE RA 2	0	106	4385	-2.38	-0.34	0
147	SLE RA 3	0	-63	4619	5.73	0.17	0
147	SLE RA 4	0	38	4533	0.9	-0.14	0
147	SLE RA 5	0	106	4444	-2.35	-0.35	0
147	SLE RA 6	0	-62	4678	5.75	0.16	0
147	SLE RA 7	0	39	4592	0.93	-0.14	0
147	SLE RA 8	0	-62	4645	5.72	0.16	0
147	SLE RA 9	0	39	4559	0.89	-0.14	0
147	SLE RA 10	0	114	4867	-2.36	-0.33	0
147	SLE RA 11	0	-54	5101	5.75	0.18	0
147	SLE RA 12	0	47	5016	0.92	-0.13	0
147	SLE RA 13	0	115	4926	-2.33	-0.33	0
147	SLE RA 14	0	-53	5160	5.77	0.18	0
147	SLE RA 15	0	48	5074	0.95	-0.13	0
147	SLE RA 16	0	-53	5127	5.74	0.17	0
147	SLE RA 17	0	48	5041	0.91	-0.13	0
147	SLE RA 18	0	-50	5216	5.69	0.18	0
147	SLE RA 19	0	51	5131	0.87	-0.12	0
147	SLE RA 20	0	-50	5275	5.72	0.18	0
147	SLE RA 21	0	51	5189	0.89	-0.12	0
147	SLE FR 1	0	-63	4527	5.66	0.17	0
147	SLE FR 2	0	-29	4499	4.05	0.06	0
147	SLE FR 3	0	-63	4551	5.67	0.16	0
147	SLE FR 4	0	-25	4706	4.06	0.07	0
147	SLE FR 5	0	-59	4758	5.68	0.17	0
147	SLE FR 6	0	-57	4872	5.68	0.17	0
147	SLE QP 1	0	-63	4527	5.66	0.17	0
147	SLE QP 2	0	-59	4734	5.67	0.17	0
147	SLD 1	1	-32	4521	4.3	2.66	0.01
147	SLD 2	1	-32	4521	4.3	2.66	0.01
147	SLD 3	4	-444	4713	23.74	4.97	0
147	SLD 4	4	-444	4713	23.74	4.97	0
147	SLD 5	-5	574	4379	-24.21	-2.59	0
147	SLD 6	-5	574	4379	-24.21	-2.59	0
147	SLD 7	7	-799	5019	40.57	5.11	0
147	SLD 8	7	-799	5019	40.57	5.11	0
147	SLD 9	-7	681	4449	-29.22	-4.77	0
147	SLD 10	-7	681	4449	-29.22	-4.77	0
147	SLD 11	5	-692	5090	35.56	2.93	0
147	SLD 12	5	-692	5090	35.56	2.93	0
147	SLD 13	-4	326	4755	-12.39	-4.63	0
147	SLD 14	-4	326	4755	-12.39	-4.63	0
147	SLD 15	-1	-86	4947	7.04	-2.32	-0.01
147	SLD 16	-1	-86	4947	7.04	-2.32	-0.01
147	SLV 1	2	-7	4219	3	6.11	0.01
147	SLV 2	2	-7	4219	3	6.11	0.01
147	SLV 3	11	-974	4679	48.64	11.87	0.01
147	SLV 4	11	-974	4679	48.64	11.87	0.01

Nodo	Cont.	Reazione a traslazione			Reazione a rotazione		
Ind.	N.br.	x	y	z	x	y	z
147	SLV 5	-12	1424	3881	-64.36	-6.79	0.01
147	SLV 6	-12	1424	3881	-64.36	-6.79	0.01
147	SLV 7	16	-1801	5417	87.79	12.42	0
147	SLV 8	16	-1801	5417	87.79	12.42	0
147	SLV 9	-16	1683	4052	-76.44	-12.08	0
147	SLV 10	-16	1683	4052	-76.44	-12.08	0
147	SLV 11	12	-1542	5588	75.7	7.13	-0.01
147	SLV 12	12	-1542	5588	75.7	7.13	-0.01
147	SLV 13	-11	856	4789	-37.3	-11.53	-0.01
147	SLV 14	-11	856	4789	-37.3	-11.53	-0.01
147	SLV 15	-2	-111	5249	8.35	-5.77	-0.01
147	SLV 16	-2	-111	5249	8.35	-5.77	-0.01
148	SLU 1	-2	975	3059	-39.62	-2.13	0
148	SLU 2	-1	1021	3054	-41.6	-1.01	0
148	SLU 3	-2	1013	3149	-41.16	-2.22	0
148	SLU 4	-2	1040	3146	-42.34	-1.54	0
148	SLU 5	-1	1046	3115	-42.62	-1.07	0
148	SLU 6	-2	1039	3210	-42.18	-2.28	0
148	SLU 7	-2	1066	3207	-43.37	-1.61	0
148	SLU 8	-2	1026	3181	-41.67	-2.25	0
148	SLU 9	-2	1054	3178	-42.86	-1.58	0
148	SLU 10	-1	1170	3412	-47.62	-1.36	0
148	SLU 11	-3	1162	3507	-47.18	-2.56	0
148	SLU 12	-2	1190	3504	-48.37	-1.89	0
148	SLU 13	-1	1196	3474	-48.65	-1.42	0
148	SLU 14	-3	1188	3568	-48.21	-2.63	0
148	SLU 15	-2	1216	3565	-49.39	-1.96	0
148	SLU 16	-3	1176	3540	-47.7	-2.6	0
148	SLU 17	-2	1203	3537	-48.88	-1.93	0
148	SLU 18	-3	1189	3571	-48.23	-2.63	0
148	SLU 19	-2	1216	3568	-49.41	-1.96	0
148	SLU 20	-3	1214	3632	-49.25	-2.69	0
148	SLU 21	-2	1242	3629	-50.44	-2.02	0
148	SLU 22	-3	1119	3403	-45.45	-2.46	0
148	SLU 23	-1	1165	3398	-47.42	-1.34	0
148	SLU 24	-3	1157	3492	-46.98	-2.55	0
148	SLU 25	-2	1185	3489	-48.17	-1.88	0
148	SLU 26	-1	1191	3459	-48.45	-1.4	0
148	SLU 27	-3	1183	3553	-48.01	-2.61	0
148	SLU 28	-2	1210	3551	-49.19	-1.94	0
148	SLU 29	-3	1170	3525	-47.5	-2.58	0
148	SLU 30	-2	1198	3522	-48.68	-1.91	0
148	SLU 31	-2	1315	3756	-53.45	-1.69	0
148	SLU 32	-3	1307	3850	-53	-2.9	0
148	SLU 33	-2	1334	3848	-54.19	-2.22	0
148	SLU 34	-2	1340	3817	-54.47	-1.75	0
148	SLU 35	-3	1332	3912	-54.03	-2.96	0
148	SLU 36	-2	1360	3909	-55.22	-2.29	0
148	SLU 37	-3	1320	3883	-53.52	-2.93	0
148	SLU 38	-2	1347	3880	-54.71	-2.26	0
148	SLU 39	-3	1333	3914	-54.05	-2.96	0
148	SLU 40	-2	1360	3911	-55.24	-2.29	0
148	SLU 41	-3	1358	3975	-55.08	-3.02	0
148	SLU 42	-2	1386	3973	-56.26	-2.35	0
148	SLU 43	-3	1218	3859	-49.51	-2.65	0
148	SLU 44	-2	1264	3854	-51.49	-1.53	0
148	SLU 45	-3	1256	3949	-51.04	-2.74	0
148	SLU 46	-2	1283	3946	-52.23	-2.07	0
148	SLU 47	-2	1289	3915	-52.51	-1.6	0
148	SLU 48	-3	1281	4010	-52.07	-2.8	0
148	SLU 49	-2	1309	4007	-53.26	-2.13	0
148	SLU 50	-3	1269	3981	-51.56	-2.78	0
148	SLU 51	-2	1297	3978	-52.75	-2.11	0
148	SLU 52	-2	1413	4212	-57.51	-1.88	0
148	SLU 53	-3	1405	4307	-57.07	-3.09	0
148	SLU 54	-3	1433	4304	-58.25	-2.42	0
148	SLU 55	-2	1439	4274	-58.54	-1.95	0
148	SLU 56	-3	1431	4368	-58.1	-3.15	0
148	SLU 57	-3	1459	4365	-59.28	-2.48	0
148	SLU 58	-3	1418	4340	-57.59	-3.13	0
148	SLU 59	-3	1446	4337	-58.77	-2.46	0
148	SLU 60	-3	1431	4371	-58.12	-3.15	0
148	SLU 61	-3	1459	4368	-59.3	-2.48	0
148	SLU 62	-3	1457	4432	-59.14	-3.21	0
148	SLU 63	-3	1485	4429	-60.33	-2.54	0
148	SLU 64	-3	1362	4203	-55.34	-2.98	0
148	SLU 65	-2	1408	4198	-57.31	-1.87	0
148	SLU 66	-3	1400	4292	-56.87	-3.07	0
148	SLU 67	-3	1428	4289	-58.05	-2.4	0
148	SLU 68	-2	1434	4259	-58.34	-1.93	0
148	SLU 69	-3	1426	4353	-57.9	-3.13	0
148	SLU 70	-3	1453	4350	-59.08	-2.46	0
148	SLU 71	-3	1413	4325	-57.39	-3.11	0
148	SLU 72	-3	1441	4322	-58.57	-2.44	0
148	SLU 73	-2	1558	4556	-63.34	-2.21	0
148	SLU 74	-4	1550	4650	-62.89	-3.42	0
148	SLU 75	-3	1577	4648	-64.08	-2.75	0
148	SLU 76	-2	1583	4617	-64.36	-2.28	0
148	SLU 77	-4	1575	4712	-63.92	-3.48	0
148	SLU 78	-3	1603	4709	-65.11	-2.81	0
148	SLU 79	-4	1563	4683	-63.41	-3.46	0

Nodo	Cont.	Reazione a traslazione			Reazione a rotazione		
Ind.	N.br.	x	y	z	x	y	z
148	SLU 80	-3	1590	4680	-64.6	-2.79	0
148	SLU 81	-4	1576	4714	-63.94	-3.48	0
148	SLU 82	-3	1603	4711	-65.13	-2.81	0
148	SLU 83	-4	1601	4775	-64.97	-3.55	0
148	SLU 84	-3	1629	4773	-66.15	-2.87	0
148	SLE RA 1	-2	1016	3157	-41.29	-2.22	0
148	SLE RA 2	-2	1047	3154	-42.6	-1.48	0
148	SLE RA 3	-2	1042	3217	-42.31	-2.28	0
148	SLE RA 4	-2	1060	3215	-43.1	-1.83	0
148	SLE RA 5	-2	1064	3195	-43.29	-1.52	0
148	SLE RA 6	-3	1059	3258	-42.99	-2.32	0
148	SLE RA 7	-2	1077	3256	-43.78	-1.88	0
148	SLE RA 8	-3	1050	3239	-42.65	-2.31	0
148	SLE RA 9	-2	1069	3237	-43.44	-1.86	0
148	SLE RA 10	-2	1146	3393	-46.62	-1.71	0
148	SLE RA 11	-3	1141	3456	-46.32	-2.51	0
148	SLE RA 12	-2	1160	3454	-47.11	-2.07	0
148	SLE RA 13	-2	1163	3434	-47.3	-1.75	0
148	SLE RA 14	-3	1158	3497	-47.01	-2.56	0
148	SLE RA 15	-2	1177	3495	-47.8	-2.11	0
148	SLE RA 16	-3	1150	3478	-46.67	-2.54	0
148	SLE RA 17	-2	1168	3476	-47.46	-2.09	0
148	SLE RA 18	-3	1159	3498	-47.02	-2.56	0
148	SLE RA 19	-2	1177	3496	-47.81	-2.11	0
148	SLE RA 20	-3	1176	3539	-47.71	-2.6	0
148	SLE RA 21	-2	1194	3537	-48.5	-2.15	0
148	SLE FR 1	-2	1016	3157	-41.29	-2.22	0
148	SLE FR 2	-2	1022	3157	-41.55	-2.07	0
148	SLE FR 3	-2	1023	3174	-41.56	-2.24	0
148	SLE FR 4	-2	1065	3259	-43.27	-2.17	0
148	SLE FR 5	-3	1066	3276	-43.28	-2.34	0
148	SLE FR 6	-3	1087	3328	-44.15	-2.39	0
148	SLE QP 1	-2	1016	3157	-41.29	-2.22	0
148	SLE QP 2	-3	1059	3260	-43.01	-2.32	0
148	SLD 1	2	979	2638	-40.28	2.75	0.01
148	SLD 2	2	979	2638	-40.28	2.75	0.01
148	SLD 3	9	488	2305	-19.46	8.78	0.01
148	SLD 4	9	488	2305	-19.46	8.78	0.01
148	SLD 5	-12	1779	3578	-73.76	-9.95	0.01
148	SLD 6	-12	1779	3578	-73.76	-9.95	0.01
148	SLD 7	11	144	2468	-4.37	10.15	0
148	SLD 8	11	144	2468	-4.37	10.15	0
148	SLD 9	-16	1974	4051	-81.65	-14.8	0
148	SLD 10	-16	1974	4051	-81.65	-14.8	0
148	SLD 11	7	339	2941	-12.25	5.3	-0.01
148	SLD 12	7	339	2941	-12.25	5.3	-0.01
148	SLD 13	-14	1630	4214	-66.55	-13.42	-0.01
148	SLD 14	-14	1630	4214	-66.55	-13.42	-0.01
148	SLD 15	-7	1139	3881	-45.74	-7.39	-0.01
148	SLD 16	-7	1139	3881	-45.74	-7.39	-0.01
148	SLV 1	7	873	1830	-36.61	10.16	0.03
148	SLV 2	7	873	1830	-36.61	10.16	0.03
148	SLV 3	25	-272	1052	11.94	25.61	0.02
148	SLV 4	25	-272	1052	11.94	25.61	0.02
148	SLV 5	-27	2739	4010	-114.73	-22.01	0.02
148	SLV 6	-27	2739	4010	-114.73	-22.01	0.02
148	SLV 7	33	-1076	1418	47.12	29.49	-0.01
148	SLV 8	33	-1076	1418	47.12	29.49	-0.01
148	SLV 9	-38	3194	5101	-133.13	-34.14	0
148	SLV 10	-38	3194	5101	-133.13	-34.14	0
148	SLV 11	22	-621	2509	28.71	17.37	-0.02
148	SLV 12	22	-621	2509	28.71	17.37	-0.02
148	SLV 13	-30	2390	5467	-97.95	-30.26	-0.02
148	SLV 14	-30	2390	5467	-97.95	-30.26	-0.02
148	SLV 15	-12	1245	4689	-49.4	-14.81	-0.03
148	SLV 16	-12	1245	4689	-49.4	-14.81	-0.03
149	SLU 1	3	-496	4547	24.98	2.75	0
149	SLU 2	3	-501	4496	25.15	2.76	0
149	SLU 3	3	-509	4712	25.68	2.85	0
149	SLU 4	3	-512	4682	25.79	2.85	0
149	SLU 5	3	-509	4613	25.62	2.82	0
149	SLU 6	3	-518	4829	26.16	2.92	0
149	SLU 7	3	-521	4799	26.26	2.92	0
149	SLU 8	3	-514	4780	25.93	2.89	0
149	SLU 9	3	-516	4750	26.03	2.89	0
149	SLU 10	4	-566	5254	28.6	3.25	0
149	SLU 11	4	-575	5471	29.13	3.34	0
149	SLU 12	4	-578	5440	29.23	3.34	0
149	SLU 13	4	-575	5371	29.07	3.31	0
149	SLU 14	4	-584	5587	29.61	3.41	0
149	SLU 15	4	-586	5557	29.71	3.41	0
149	SLU 16	4	-579	5538	29.38	3.38	0
149	SLU 17	4	-582	5508	29.48	3.38	0
149	SLU 18	4	-590	5630	29.91	3.45	0
149	SLU 19	4	-593	5599	30.01	3.45	0
149	SLU 20	4	-599	5746	30.38	3.52	0
149	SLU 21	4	-601	5716	30.48	3.52	0
149	SLU 22	4	-547	5212	27.73	3.15	0
149	SLU 23	4	-552	5162	27.9	3.15	0
149	SLU 24	4	-560	5378	28.43	3.25	0
149	SLU 25	4	-563	5348	28.53	3.25	0

Nodo	Cont.	Reazione a traslazione			Reazione a rotazione		
Ind.	N.br.	x	y	z	x	y	z
149	SLU 26	4	-560	5279	28.37	3.22	0
149	SLU 27	4	-569	5495	28.91	3.31	0
149	SLU 28	4	-572	5465	29.01	3.31	0
149	SLU 29	4	-565	5446	28.68	3.28	0
149	SLU 30	4	-567	5416	28.78	3.28	0
149	SLU 31	4	-617	5920	31.34	3.64	0
149	SLU 32	4	-626	6136	31.88	3.73	0
149	SLU 33	4	-628	6106	31.98	3.74	0
149	SLU 34	4	-626	6037	31.82	3.71	0
149	SLU 35	4	-635	6253	32.35	3.8	0
149	SLU 36	4	-637	6223	32.45	3.8	0
149	SLU 37	4	-630	6204	32.12	3.77	0
149	SLU 38	4	-633	6174	32.22	3.77	0
149	SLU 39	4	-641	6295	32.65	3.85	0
149	SLU 40	4	-643	6265	32.75	3.85	0
149	SLU 41	5	-650	6412	33.13	3.91	0
149	SLU 42	5	-652	6382	33.23	3.91	0
149	SLU 43	4	-628	5682	31.53	3.45	0
149	SLU 44	4	-632	5632	31.7	3.45	0
149	SLU 45	4	-641	5848	32.24	3.54	0
149	SLU 46	4	-644	5818	32.34	3.54	0
149	SLU 47	4	-641	5749	32.18	3.51	0
149	SLU 48	4	-650	5965	32.71	3.61	0
149	SLU 49	4	-652	5935	32.81	3.61	0
149	SLU 50	4	-645	5916	32.48	3.58	0
149	SLU 51	4	-648	5886	32.58	3.58	0
149	SLU 52	5	-698	6390	35.15	3.94	0
149	SLU 53	5	-706	6606	35.68	4.03	0
149	SLU 54	5	-709	6576	35.78	4.03	0
149	SLU 55	5	-706	6507	35.62	4	0
149	SLU 56	5	-715	6723	36.16	4.1	0
149	SLU 57	5	-718	6693	36.26	4.1	0
149	SLU 58	5	-711	6674	35.93	4.07	0
149	SLU 59	5	-713	6644	36.03	4.07	0
149	SLU 60	5	-721	6765	36.46	4.14	0
149	SLU 61	5	-724	6735	36.56	4.15	0
149	SLU 62	5	-730	6882	36.93	4.21	0
149	SLU 63	5	-733	6852	37.03	4.21	0
149	SLU 64	4	-679	6348	34.28	3.84	0
149	SLU 65	4	-683	6298	34.45	3.84	0
149	SLU 66	5	-692	6514	34.98	3.94	0
149	SLU 67	5	-694	6484	35.09	3.94	0
149	SLU 68	5	-692	6415	34.92	3.91	0
149	SLU 69	5	-701	6631	35.46	4	0
149	SLU 70	5	-703	6601	35.56	4	0
149	SLU 71	5	-696	6582	35.23	3.97	0
149	SLU 72	5	-699	6552	35.33	3.97	0
149	SLU 73	5	-749	7056	37.9	4.33	0
149	SLU 74	5	-757	7272	38.43	4.43	0
149	SLU 75	5	-760	7242	38.53	4.43	0
149	SLU 76	5	-757	7173	38.37	4.4	0
149	SLU 77	5	-766	7389	38.91	4.49	0
149	SLU 78	5	-769	7359	39.01	4.49	0
149	SLU 79	5	-762	7340	38.68	4.46	0
149	SLU 80	5	-764	7310	38.78	4.46	0
149	SLU 81	5	-772	7431	39.21	4.54	0
149	SLU 82	5	-775	7401	39.31	4.54	0
149	SLU 83	5	-781	7548	39.68	4.61	0
149	SLU 84	5	-784	7518	39.78	4.61	0
149	SLE RA 1	3	-511	4737	25.77	2.87	0
149	SLE RA 2	3	-514	4703	25.88	2.87	0
149	SLE RA 3	3	-520	4847	26.24	2.93	0
149	SLE RA 4	3	-521	4827	26.3	2.93	0
149	SLE RA 5	3	-520	4781	26.19	2.91	0
149	SLE RA 6	3	-525	4925	26.55	2.98	0
149	SLE RA 7	3	-527	4905	26.62	2.98	0
149	SLE RA 8	3	-523	4893	26.4	2.96	0
149	SLE RA 9	3	-524	4872	26.47	2.96	0
149	SLE RA 10	4	-557	5209	28.18	3.19	0
149	SLE RA 11	4	-563	5353	28.53	3.26	0
149	SLE RA 12	4	-565	5333	28.6	3.26	0
149	SLE RA 13	4	-563	5287	28.49	3.24	0
149	SLE RA 14	4	-569	5431	28.85	3.3	0
149	SLE RA 15	4	-571	5411	28.92	3.3	0
149	SLE RA 16	4	-566	5398	28.7	3.28	0
149	SLE RA 17	4	-568	5378	28.76	3.28	0
149	SLE RA 18	4	-573	5459	29.05	3.33	0
149	SLE RA 19	4	-575	5439	29.12	3.33	0
149	SLE RA 20	4	-579	5537	29.37	3.38	0
149	SLE RA 21	4	-581	5517	29.43	3.38	0
149	SLE FR 1	3	-511	4737	25.77	2.87	0
149	SLE FR 2	3	-511	4730	25.79	2.87	0
149	SLE FR 3	3	-513	4768	25.89	2.89	0
149	SLE FR 4	3	-530	4947	26.77	3.01	0
149	SLE FR 5	3	-532	4985	26.88	3.02	0
149	SLE FR 6	4	-542	5098	27.41	3.1	0
149	SLE QP 1	3	-511	4737	25.77	2.87	0
149	SLE QP 2	3	-530	4953	26.75	3.01	0
149	SLD 1	7	-530	3971	26.56	7.59	0.01
149	SLD 2	7	-530	3971	26.56	7.59	0.01
149	SLD 3	10	-983	4373	48.54	9.57	0

Nodo	Cont.	Reazione a traslazione			Reazione a rotazione		
Ind.	N.br.	x	y	z	x	y	z
149	SLD 4	10	-983	4373	48.54	9.57	0
149	SLD 5	-1	157	4049	-6.64	1.37	0.01
149	SLD 6	-1	157	4049	-6.64	1.37	0.01
149	SLD 7	10	-1353	5389	66.62	7.99	-0.01
149	SLD 8	10	-1353	5389	66.62	7.99	-0.01
149	SLD 9	-3	293	4518	-13.12	-1.98	0.01
149	SLD 10	-3	293	4518	-13.12	-1.98	0.01
149	SLD 11	8	-1216	5858	60.14	4.65	-0.01
149	SLD 12	8	-1216	5858	60.14	4.65	-0.01
149	SLD 13	-3	-76	5534	4.96	-3.56	0
149	SLD 14	-3	-76	5534	4.96	-3.56	0
149	SLD 15	0	-529	5936	26.94	-1.57	-0.01
149	SLD 16	0	-529	5936	26.94	-1.57	-0.01
149	SLV 1	11	-524	2663	26.04	13.87	0.02
149	SLV 2	11	-524	2663	26.04	13.87	0.02
149	SLV 3	19	-1581	3604	77.31	18.91	0
149	SLV 4	19	-1581	3604	77.31	18.91	0
149	SLV 5	-7	1074	2839	-51.22	-1.37	0.03
149	SLV 6	-7	1074	2839	-51.22	-1.37	0.03
149	SLV 7	21	-2448	5976	119.68	15.42	-0.02
149	SLV 8	21	-2448	5976	119.68	15.42	-0.02
149	SLV 9	-14	1388	3931	-66.18	-9.4	0.02
149	SLV 10	-14	1388	3931	-66.18	-9.4	0.02
149	SLV 11	14	-2134	7068	104.72	7.39	-0.03
149	SLV 12	14	-2134	7068	104.72	7.39	-0.03
149	SLV 13	-12	522	6303	-23.81	-12.89	-0.01
149	SLV 14	-12	522	6303	-23.81	-12.89	-0.01
149	SLV 15	-4	-535	7244	27.46	-7.86	-0.02
149	SLV 16	-4	-535	7244	27.46	-7.86	-0.02
150	SLU 1	0	-562	3960	26.34	1.78	0.03
150	SLU 2	0	-562	3909	26.3	1.75	0.03
150	SLU 3	0	-580	4082	27.22	1.83	0.03
150	SLU 4	0	-580	4052	27.19	1.82	0.03
150	SLU 5	0	-575	3986	26.92	1.78	0.03
150	SLU 6	0	-593	4159	27.84	1.87	0.03
150	SLU 7	0	-593	4129	27.81	1.85	0.03
150	SLU 8	0	-588	4114	27.58	1.84	0.03
150	SLU 9	0	-588	4083	27.56	1.82	0.03
150	SLU 10	0	-638	4547	30.03	1.99	0.03
150	SLU 11	0	-657	4720	30.95	2.07	0.03
150	SLU 12	0	-657	4690	30.92	2.05	0.03
150	SLU 13	0	-652	4624	30.65	2.02	0.03
150	SLU 14	0	-670	4797	31.57	2.1	0.03
150	SLU 15	0	-670	4767	31.54	2.08	0.03
150	SLU 16	0	-665	4752	31.31	2.08	0.03
150	SLU 17	0	-665	4722	31.29	2.06	0.03
150	SLU 18	0	-671	4871	31.67	2.12	0.03
150	SLU 19	0	-671	4841	31.64	2.1	0.03
150	SLU 20	0	-684	4948	32.29	2.15	0.03
150	SLU 21	0	-684	4918	32.26	2.13	0.03
150	SLU 22	0	-625	4516	29.45	2.04	0.03
150	SLU 23	0	-625	4466	29.41	2.01	0.03
150	SLU 24	0	-644	4639	30.33	2.09	0.03
150	SLU 25	0	-644	4608	30.3	2.08	0.03
150	SLU 26	0	-638	4543	30.03	2.04	0.03
150	SLU 27	0	-657	4716	30.95	2.13	0.03
150	SLU 28	0	-657	4685	30.93	2.11	0.03
150	SLU 29	0	-652	4670	30.7	2.1	0.03
150	SLU 30	0	-652	4640	30.67	2.08	0.03
150	SLU 31	0	-702	5104	33.14	2.25	0.03
150	SLU 32	0	-720	5277	34.06	2.33	0.04
150	SLU 33	0	-720	5246	34.03	2.31	0.04
150	SLU 34	0	-715	5181	33.76	2.28	0.03
150	SLU 35	0	-734	5354	34.68	2.36	0.04
150	SLU 36	0	-734	5323	34.65	2.34	0.04
150	SLU 37	0	-728	5309	34.43	2.34	0.04
150	SLU 38	0	-728	5278	34.4	2.32	0.04
150	SLU 39	0	-735	5428	34.78	2.38	0.04
150	SLU 40	0	-735	5398	34.75	2.36	0.04
150	SLU 41	0	-748	5505	35.4	2.41	0.04
150	SLU 42	0	-748	5475	35.38	2.39	0.04
150	SLU 43	0	-708	4957	33.17	2.23	0.03
150	SLU 44	0	-708	4906	33.13	2.2	0.03
150	SLU 45	0	-727	5079	34.05	2.28	0.03
150	SLU 46	0	-727	5049	34.02	2.26	0.03
150	SLU 47	0	-722	4983	33.75	2.23	0.03
150	SLU 48	0	-740	5156	34.67	2.31	0.03
150	SLU 49	0	-740	5126	34.65	2.29	0.03
150	SLU 50	0	-735	5111	34.42	2.29	0.03
150	SLU 51	0	-735	5081	34.39	2.27	0.03
150	SLU 52	0	-785	5544	36.86	2.43	0.04
150	SLU 53	0	-803	5717	37.78	2.52	0.04
150	SLU 54	0	-803	5687	37.75	2.5	0.04
150	SLU 55	0	-798	5621	37.48	2.46	0.04
150	SLU 56	0	-817	5794	38.4	2.55	0.04
150	SLU 57	0	-817	5764	38.38	2.53	0.04
150	SLU 58	0	-812	5749	38.15	2.53	0.04
150	SLU 59	0	-812	5719	38.12	2.51	0.04
150	SLU 60	0	-818	5868	38.5	2.57	0.04
150	SLU 61	0	-818	5838	38.48	2.55	0.04
150	SLU 62	0	-831	5945	39.12	2.6	0.04

Nodo	Cont.	Reazione a traslazione			Reazione a rotazione		
Ind.	N.br.	x	y	z	x	y	z
150	SLU 63	0	-831	5915	39.1	2.58	0.04
150	SLU 64	0	-772	5513	36.29	2.49	0.04
150	SLU 65	0	-772	5463	36.24	2.46	0.04
150	SLU 66	0	-790	5636	37.16	2.54	0.04
150	SLU 67	0	-790	5605	37.14	2.52	0.04
150	SLU 68	0	-785	5540	36.87	2.49	0.04
150	SLU 69	0	-804	5713	37.79	2.57	0.04
150	SLU 70	0	-804	5682	37.76	2.55	0.04
150	SLU 71	0	-798	5668	37.53	2.55	0.04
150	SLU 72	0	-798	5637	37.51	2.53	0.04
150	SLU 73	0	-849	6101	39.97	2.69	0.04
150	SLU 74	0	-867	6274	40.89	2.78	0.04
150	SLU 75	0	-867	6243	40.87	2.76	0.04
150	SLU 76	0	-862	6178	40.6	2.72	0.04
150	SLU 77	0	-880	6351	41.52	2.81	0.04
150	SLU 78	0	-880	6320	41.49	2.79	0.04
150	SLU 79	0	-875	6306	41.26	2.79	0.04
150	SLU 80	0	-875	6275	41.24	2.77	0.04
150	SLU 81	0	-881	6425	41.62	2.83	0.04
150	SLU 82	0	-881	6395	41.59	2.81	0.04
150	SLU 83	0	-895	6502	42.24	2.86	0.04
150	SLU 84	0	-895	6472	42.21	2.84	0.04
150	SLE RA 1	0	-580	4119	27.23	1.86	0.03
150	SLE RA 2	0	-580	4085	27.2	1.84	0.03
150	SLE RA 3	0	-592	4200	27.81	1.89	0.03
150	SLE RA 4	0	-592	4180	27.8	1.88	0.03
150	SLE RA 5	0	-589	4136	27.61	1.86	0.03
150	SLE RA 6	0	-601	4252	28.23	1.91	0.03
150	SLE RA 7	0	-601	4231	28.21	1.9	0.03
150	SLE RA 8	0	-598	4221	28.06	1.9	0.03
150	SLE RA 9	0	-597	4201	28.04	1.88	0.03
150	SLE RA 10	0	-631	4510	29.69	1.99	0.03
150	SLE RA 11	0	-643	4626	30.3	2.05	0.03
150	SLE RA 12	0	-643	4605	30.28	2.04	0.03
150	SLE RA 13	0	-640	4562	30.1	2.01	0.03
150	SLE RA 14	0	-652	4677	30.71	2.07	0.03
150	SLE RA 15	0	-652	4657	30.7	2.06	0.03
150	SLE RA 16	0	-649	4647	30.55	2.06	0.03
150	SLE RA 17	0	-649	4627	30.53	2.04	0.03
150	SLE RA 18	0	-653	4726	30.78	2.08	0.03
150	SLE RA 19	0	-653	4706	30.76	2.07	0.03
150	SLE RA 20	0	-662	4778	31.2	2.1	0.03
150	SLE RA 21	0	-662	4758	31.18	2.09	0.03
150	SLE FR 1	0	-580	4119	27.23	1.86	0.03
150	SLE FR 2	0	-580	4112	27.22	1.85	0.03
150	SLE FR 3	0	-583	4139	27.4	1.86	0.03
150	SLE FR 4	0	-602	4294	28.29	1.92	0.03
150	SLE FR 5	0	-605	4322	28.46	1.93	0.03
150	SLE FR 6	0	-616	4423	29.01	1.97	0.03
150	SLE QP 1	0	-580	4119	27.23	1.86	0.03
150	SLE QP 2	0	-602	4301	28.29	1.92	0.03
150	SLD 1	4	-84	4960	3.69	7.71	0.03
150	SLD 2	4	-84	4960	3.69	7.71	0.03
150	SLD 3	3	-548	5305	26.2	6.73	0.04
150	SLD 4	3	-548	5305	26.2	6.73	0.04
150	SLD 5	3	257	3975	-13.23	5.16	0.02
150	SLD 6	3	257	3975	-13.23	5.16	0.02
150	SLD 7	-1	-1289	5126	61.81	1.87	0.04
150	SLD 8	-1	-1289	5126	61.81	1.87	0.04
150	SLD 9	1	85	3476	-5.22	1.98	0.02
150	SLD 10	1	85	3476	-5.22	1.98	0.02
150	SLD 11	-3	-1461	4628	69.82	-1.31	0.04
150	SLD 12	-3	-1461	4628	69.82	-1.31	0.04
150	SLD 13	-3	-656	3297	30.39	-2.88	0.02
150	SLD 14	-3	-656	3297	30.39	-2.88	0.02
150	SLD 15	-4	-1120	3643	52.9	-3.86	0.02
150	SLD 16	-4	-1120	3643	52.9	-3.86	0.02
150	SLV 1	9	595	5822	-28.59	15.77	0.04
150	SLV 2	9	595	5822	-28.59	15.77	0.04
150	SLV 3	6	-487	6630	23.91	13.37	0.06
150	SLV 4	6	-487	6630	23.91	13.37	0.06
150	SLV 5	8	1398	3531	-68.4	9.72	0.01
150	SLV 6	8	1398	3531	-68.4	9.72	0.01
150	SLV 7	-3	-2208	6226	106.61	1.71	0.06
150	SLV 8	-3	-2208	6226	106.61	1.71	0.06
150	SLV 9	3	1005	2376	-50.02	2.13	0
150	SLV 10	3	1005	2376	-50.02	2.13	0
150	SLV 11	-7	-2601	5071	124.99	-5.88	0.04
150	SLV 12	-7	-2601	5071	124.99	-5.88	0.04
150	SLV 13	-6	-716	1972	32.68	-9.52	0
150	SLV 14	-6	-716	1972	32.68	-9.52	0
150	SLV 15	-9	-1798	2781	85.18	-11.92	0.01
150	SLV 16	-9	-1798	2781	85.18	-11.92	0.01
151	SLU 1	0	153	1469	-3.73	0.73	0.03
151	SLU 2	0	150	1455	-3.65	0.76	0.03
151	SLU 3	0	160	1505	-3.92	0.74	0.03
151	SLU 4	0	158	1497	-3.87	0.76	0.03
151	SLU 5	0	155	1479	-3.78	0.76	0.03
151	SLU 6	0	165	1529	-4.05	0.75	0.03
151	SLU 7	0	163	1521	-4	0.77	0.03
151	SLU 8	0	163	1517	-3.98	0.74	0.03

Nodo	Cont.	Reazione a traslazione			Reazione a rotazione		
Ind.	N.br.	x	y	z	x	y	z
151	SLU 9	0	161	1509	-3.94	0.76	0.03
151	SLU 10	0	177	1728	-4.31	0.88	0.03
151	SLU 11	0	188	1778	-4.58	0.87	0.04
151	SLU 12	0	186	1769	-4.53	0.89	0.03
151	SLU 13	0	182	1752	-4.43	0.89	0.03
151	SLU 14	0	193	1801	-4.7	0.88	0.04
151	SLU 15	0	191	1793	-4.66	0.89	0.04
151	SLU 16	0	190	1789	-4.64	0.87	0.04
151	SLU 17	0	188	1781	-4.59	0.89	0.04
151	SLU 18	0	192	1859	-4.67	0.91	0.04
151	SLU 19	0	190	1850	-4.62	0.93	0.04
151	SLU 20	0	197	1882	-4.79	0.92	0.04
151	SLU 21	0	195	1874	-4.75	0.93	0.04
151	SLU 22	0	184	1656	-4.52	0.83	0.03
151	SLU 23	0	181	1642	-4.44	0.86	0.03
151	SLU 24	0	192	1692	-4.71	0.84	0.03
151	SLU 25	0	190	1684	-4.66	0.86	0.03
151	SLU 26	0	186	1666	-4.57	0.87	0.03
151	SLU 27	0	197	1716	-4.83	0.85	0.03
151	SLU 28	0	195	1707	-4.79	0.87	0.03
151	SLU 29	0	194	1704	-4.77	0.85	0.03
151	SLU 30	0	192	1695	-4.72	0.86	0.03
151	SLU 31	0	209	1915	-5.09	0.99	0.04
151	SLU 32	0	219	1964	-5.36	0.97	0.04
151	SLU 33	0	218	1956	-5.32	0.99	0.04
151	SLU 34	0	214	1939	-5.22	1	0.04
151	SLU 35	0	224	1988	-5.49	0.98	0.04
151	SLU 36	0	223	1980	-5.44	1	0.04
151	SLU 37	0	222	1976	-5.42	0.97	0.04
151	SLU 38	0	220	1968	-5.38	0.99	0.04
151	SLU 39	0	224	2045	-5.45	1.01	0.04
151	SLU 40	0	222	2037	-5.41	1.03	0.04
151	SLU 41	0	229	2069	-5.58	1.02	0.04
151	SLU 42	0	227	2061	-5.53	1.04	0.04
151	SLU 43	0	188	1846	-4.58	0.91	0.04
151	SLU 44	0	185	1832	-4.5	0.94	0.04
151	SLU 45	0	195	1882	-4.77	0.92	0.04
151	SLU 46	0	193	1873	-4.72	0.94	0.04
151	SLU 47	0	190	1856	-4.63	0.95	0.04
151	SLU 48	0	200	1906	-4.9	0.93	0.04
151	SLU 49	0	198	1897	-4.85	0.95	0.04
151	SLU 50	0	198	1894	-4.83	0.92	0.04
151	SLU 51	0	196	1885	-4.79	0.94	0.04
151	SLU 52	0	212	2105	-5.16	1.07	0.04
151	SLU 53	0	223	2154	-5.42	1.05	0.04
151	SLU 54	0	221	2146	-5.38	1.07	0.04
151	SLU 55	0	217	2129	-5.28	1.07	0.04
151	SLU 56	0	228	2178	-5.55	1.06	0.04
151	SLU 57	0	226	2170	-5.5	1.08	0.04
151	SLU 58	0	225	2166	-5.49	1.05	0.04
151	SLU 59	0	223	2158	-5.44	1.07	0.04
151	SLU 60	0	227	2235	-5.51	1.09	0.04
151	SLU 61	0	225	2227	-5.47	1.11	0.04
151	SLU 62	0	232	2259	-5.64	1.1	0.04
151	SLU 63	0	230	2251	-5.59	1.12	0.04
151	SLU 64	0	219	2033	-5.37	1.01	0.04
151	SLU 65	0	216	2019	-5.29	1.04	0.04
151	SLU 66	0	227	2068	-5.56	1.03	0.04
151	SLU 67	0	225	2060	-5.51	1.04	0.04
151	SLU 68	0	221	2043	-5.42	1.05	0.04
151	SLU 69	0	232	2092	-5.68	1.03	0.04
151	SLU 70	0	230	2084	-5.64	1.05	0.04
151	SLU 71	0	229	2080	-5.62	1.03	0.04
151	SLU 72	0	227	2072	-5.57	1.05	0.04
151	SLU 73	0	244	2292	-5.94	1.17	0.05
151	SLU 74	0	254	2341	-6.21	1.15	0.05
151	SLU 75	0	253	2333	-6.17	1.17	0.05
151	SLU 76	0	249	2315	-6.07	1.18	0.05
151	SLU 77	0	259	2365	-6.34	1.16	0.05
151	SLU 78	0	258	2357	-6.29	1.18	0.05
151	SLU 79	0	257	2353	-6.27	1.15	0.05
151	SLU 80	0	255	2345	-6.23	1.17	0.05
151	SLU 81	0	259	2422	-6.3	1.19	0.05
151	SLU 82	0	257	2414	-6.26	1.21	0.05
151	SLU 83	0	264	2446	-6.43	1.2	0.05
151	SLU 84	0	262	2438	-6.38	1.22	0.05
151	SLE RA 1	0	162	1523	-3.96	0.75	0.03
151	SLE RA 2	0	160	1513	-3.9	0.78	0.03
151	SLE RA 3	0	167	1546	-4.08	0.77	0.03
151	SLE RA 4	0	165	1541	-4.05	0.78	0.03
151	SLE RA 5	0	163	1529	-3.99	0.78	0.03
151	SLE RA 6	0	170	1562	-4.17	0.77	0.03
151	SLE RA 7	0	169	1557	-4.14	0.78	0.03
151	SLE RA 8	0	168	1554	-4.12	0.77	0.03
151	SLE RA 9	0	167	1549	-4.09	0.78	0.03
151	SLE RA 10	0	178	1695	-4.34	0.86	0.03
151	SLE RA 11	0	185	1728	-4.52	0.85	0.03
151	SLE RA 12	0	184	1723	-4.49	0.86	0.03
151	SLE RA 13	0	181	1711	-4.42	0.87	0.03
151	SLE RA 14	0	188	1744	-4.6	0.86	0.03
151	SLE RA 15	0	187	1739	-4.57	0.87	0.03

Nodo	Cont.	Reazione a traslazione			Reazione a rotazione		
Ind.	N.br.	x	y	z	x	y	z
151	SLE RA 16	0	187	1736	-4.56	0.85	0.03
151	SLE RA 17	0	186	1731	-4.53	0.86	0.03
151	SLE RA 18	0	188	1782	-4.58	0.88	0.04
151	SLE RA 19	0	187	1777	-4.55	0.89	0.04
151	SLE RA 20	0	191	1798	-4.66	0.88	0.04
151	SLE RA 21	0	190	1793	-4.63	0.89	0.04
151	SLE FR 1	0	162	1523	-3.96	0.75	0.03
151	SLE FR 2	0	161	1521	-3.95	0.76	0.03
151	SLE FR 3	0	163	1529	-3.99	0.76	0.03
151	SLE FR 4	0	169	1599	-4.13	0.8	0.03
151	SLE FR 5	0	171	1607	-4.18	0.79	0.03
151	SLE FR 6	0	175	1652	-4.27	0.82	0.03
151	SLE QP 1	0	162	1523	-3.96	0.75	0.03
151	SLE QP 2	0	170	1600	-4.14	0.79	0.03
151	SLD 1	4	132	1506	-2.98	5.68	0.08
151	SLD 2	4	132	1506	-2.98	5.68	0.08
151	SLD 3	3	250	1642	-6.48	6.34	0.09
151	SLD 4	3	250	1642	-6.48	6.34	0.09
151	SLD 5	2	-20	1365	1.5	1.25	0.03
151	SLD 6	2	-20	1365	1.5	1.25	0.03
151	SLD 7	0	372	1819	-10.14	3.46	0.06
151	SLD 8	0	372	1819	-10.14	3.46	0.06
151	SLD 9	0	-33	1381	1.86	-1.88	0
151	SLD 10	0	-33	1381	1.86	-1.88	0
151	SLD 11	-2	360	1836	-9.79	0.33	0.03
151	SLD 12	-2	360	1836	-9.79	0.33	0.03
151	SLD 13	-4	89	1559	-1.81	-4.76	-0.02
151	SLD 14	-4	89	1559	-1.81	-4.76	-0.02
151	SLD 15	-4	207	1695	-5.3	-4.1	-0.02
151	SLD 16	-4	207	1695	-5.3	-4.1	-0.02
151	SLV 1	10	82	1378	-1.44	12.55	0.14
151	SLV 2	10	82	1378	-1.44	12.55	0.14
151	SLV 3	8	359	1696	-9.65	14.12	0.16
151	SLV 4	8	359	1696	-9.65	14.12	0.16
151	SLV 5	5	-276	1051	9.11	1.93	0.04
151	SLV 6	5	-276	1051	9.11	1.93	0.04
151	SLV 7	0	646	2112	-18.23	7.17	0.1
151	SLV 8	0	646	2112	-18.23	7.17	0.1
151	SLV 9	0	-307	1089	9.95	-5.59	-0.04
151	SLV 10	0	-307	1089	9.95	-5.59	-0.04
151	SLV 11	-5	615	2150	-17.39	-0.35	0.03
151	SLV 12	-5	615	2150	-17.39	-0.35	0.03
151	SLV 13	-9	-20	1505	1.36	-12.54	-0.1
151	SLV 14	-9	-20	1505	1.36	-12.54	-0.1
151	SLV 15	-10	257	1823	-6.84	-10.97	-0.08
151	SLV 16	-10	257	1823	-6.84	-10.97	-0.08
152	SLU 1	0	-306	3892	17.46	0.13	0
152	SLU 2	0	12	3647	2.58	0.23	0
152	SLU 3	0	-313	4018	17.93	0.13	0
152	SLU 4	0	-123	3871	9	0.19	0
152	SLU 5	0	8	3728	2.84	0.23	0
152	SLU 6	0	-317	4099	18.19	0.14	0
152	SLU 7	0	-127	3952	9.26	0.2	0
152	SLU 8	0	-314	4053	17.99	0.13	0
152	SLU 9	0	-123	3906	9.06	0.19	0
152	SLU 10	0	-17	4322	4.63	0.26	0
152	SLU 11	0	-342	4693	19.98	0.17	0
152	SLU 12	0	-151	4546	11.05	0.22	0
152	SLU 13	0	-21	4402	4.89	0.26	0
152	SLU 14	0	-346	4773	20.24	0.17	0
152	SLU 15	0	-155	4626	11.31	0.23	0
152	SLU 16	0	-342	4727	20.03	0.16	0
152	SLU 17	0	-152	4581	11.1	0.22	0
152	SLU 18	0	-347	4855	20.39	0.17	0
152	SLU 19	0	-156	4708	11.46	0.23	0
152	SLU 20	0	-351	4936	20.65	0.18	0
152	SLU 21	0	-160	4789	11.72	0.23	0
152	SLU 22	0	-336	4511	19.51	0.16	0
152	SLU 23	0	-19	4266	4.63	0.25	0
152	SLU 24	0	-344	4637	19.97	0.16	0
152	SLU 25	0	-153	4490	11.04	0.22	0
152	SLU 26	0	-23	4347	4.89	0.26	0
152	SLU 27	0	-348	4718	20.24	0.16	0
152	SLU 28	0	-157	4571	11.31	0.22	0
152	SLU 29	0	-344	4672	20.03	0.16	0
152	SLU 30	0	-154	4525	11.1	0.22	0
152	SLU 31	0	-47	4940	6.67	0.28	0
152	SLU 32	0	-372	5311	22.02	0.19	0
152	SLU 33	0	-182	5164	13.09	0.25	0
152	SLU 34	0	-51	5021	6.94	0.29	0
152	SLU 35	1	-376	5392	22.28	0.2	0
152	SLU 36	0	-186	5245	13.35	0.25	0
152	SLU 37	0	-373	5346	22.08	0.19	0
152	SLU 38	0	-182	5199	13.15	0.25	0
152	SLU 39	1	-377	5474	22.43	0.2	0
152	SLU 40	0	-187	5327	13.51	0.26	0
152	SLU 41	1	-381	5555	22.7	0.2	0
152	SLU 42	0	-191	5408	13.77	0.26	0
152	SLU 43	0	-387	4848	22	0.16	0
152	SLU 44	0	-69	4603	7.11	0.26	0
152	SLU 45	0	-394	4974	22.46	0.16	0

Nodo	Cont.	Reazione a traslazione			Reazione a rotazione		
Ind.	N.br.	x	y	z	x	y	z
152	SLU 46	0	-204	4827	13.53	0.22	0
152	SLU 47	0	-73	4683	7.38	0.26	0
152	SLU 48	0	-398	5054	22.73	0.17	0
152	SLU 49	0	-208	4908	13.8	0.22	0
152	SLU 50	0	-395	5009	22.52	0.16	0
152	SLU 51	0	-204	4862	13.59	0.22	0
152	SLU 52	0	-98	5277	9.16	0.29	0
152	SLU 53	1	-423	5648	24.51	0.2	0
152	SLU 54	0	-233	5501	15.58	0.25	0
152	SLU 55	0	-102	5358	9.42	0.29	0
152	SLU 56	1	-427	5729	24.77	0.2	0
152	SLU 57	0	-237	5582	15.84	0.26	0
152	SLU 58	1	-424	5683	24.57	0.19	0
152	SLU 59	0	-233	5536	15.64	0.25	0
152	SLU 60	1	-428	5811	24.92	0.2	0
152	SLU 61	0	-237	5664	15.99	0.26	0
152	SLU 62	1	-432	5891	25.19	0.2	0
152	SLU 63	0	-241	5745	16.26	0.26	0
152	SLU 64	1	-417	5466	24.05	0.19	0
152	SLU 65	0	-100	5221	9.16	0.28	0
152	SLU 66	1	-425	5593	24.51	0.19	0
152	SLU 67	0	-234	5446	15.58	0.25	0
152	SLU 68	0	-104	5302	9.42	0.29	0
152	SLU 69	1	-429	5673	24.77	0.19	0
152	SLU 70	0	-238	5526	15.84	0.25	0
152	SLU 71	1	-426	5627	24.57	0.19	0
152	SLU 72	0	-235	5481	15.64	0.25	0
152	SLU 73	0	-129	5896	11.21	0.31	0
152	SLU 74	1	-454	6267	26.56	0.22	0
152	SLU 75	0	-263	6120	17.63	0.28	0
152	SLU 76	0	-133	5976	11.47	0.32	0
152	SLU 77	1	-458	6347	26.82	0.22	0
152	SLU 78	0	-267	6200	17.89	0.28	0
152	SLU 79	1	-454	6302	26.62	0.22	0
152	SLU 80	0	-264	6155	17.69	0.28	0
152	SLU 81	1	-458	6429	26.97	0.23	0
152	SLU 82	0	-268	6283	18.04	0.29	0
152	SLU 83	1	-463	6510	27.23	0.23	0
152	SLU 84	0	-272	6363	18.3	0.29	0
152	SLE RA 1	0	-314	4069	18.05	0.14	0
152	SLE RA 2	0	-103	3906	8.12	0.2	0
152	SLE RA 3	0	-319	4153	18.36	0.14	0
152	SLE RA 4	0	-192	4055	12.4	0.18	0
152	SLE RA 5	0	-105	3959	8.3	0.2	0
152	SLE RA 6	0	-322	4207	18.53	0.14	0
152	SLE RA 7	0	-195	4109	12.58	0.18	0
152	SLE RA 8	0	-320	4176	18.4	0.14	0
152	SLE RA 9	0	-193	4078	12.44	0.18	0
152	SLE RA 10	0	-122	4355	9.49	0.22	0
152	SLE RA 11	0	-339	4603	19.72	0.16	0
152	SLE RA 12	0	-211	4505	13.77	0.2	0
152	SLE RA 13	0	-125	4409	9.66	0.22	0
152	SLE RA 14	0	-341	4656	19.9	0.16	0
152	SLE RA 15	0	-214	4558	13.94	0.2	0
152	SLE RA 16	0	-339	4626	19.76	0.16	0
152	SLE RA 17	0	-212	4528	13.81	0.2	0
152	SLE RA 18	0	-342	4711	20	0.17	0
152	SLE RA 19	0	-215	4613	14.04	0.21	0
152	SLE RA 20	0	-344	4765	20.17	0.17	0
152	SLE RA 21	0	-217	4667	14.22	0.21	0
152	SLE FR 1	0	-314	4069	18.05	0.14	0
152	SLE FR 2	0	-272	4036	16.06	0.15	0
152	SLE FR 3	0	-315	4090	18.12	0.14	0
152	SLE FR 4	0	-280	4229	16.65	0.16	0
152	SLE FR 5	0	-324	4283	18.7	0.15	0
152	SLE FR 6	0	-328	4390	19.02	0.15	0
152	SLE QP 1	0	-314	4069	18.05	0.14	0
152	SLE QP 2	0	-323	4261	18.63	0.15	0
152	SLD 1	1	216	4657	-5.46	4.3	0.01
152	SLD 2	1	216	4657	-5.46	4.3	0.01
152	SLD 3	-4	-219	4990	15.12	1.02	0.01
152	SLD 4	-4	-219	4990	15.12	1.02	0.01
152	SLD 5	9	500	3874	-19.81	6.36	0
152	SLD 6	9	500	3874	-19.81	6.36	0
152	SLD 7	-9	-952	4986	48.8	-4.56	0.01
152	SLD 8	-9	-952	4986	48.8	-4.56	0.01
152	SLD 9	10	307	3537	-11.53	4.85	0
152	SLD 10	10	307	3537	-11.53	4.85	0
152	SLD 11	-8	-1145	4649	57.07	-6.07	0
152	SLD 12	-8	-1145	4649	57.07	-6.07	0
152	SLD 13	5	-426	3533	22.14	-0.73	-0.01
152	SLD 14	5	-426	3533	22.14	-0.73	-0.01
152	SLD 15	0	-862	3866	42.72	-4	0
152	SLD 16	0	-862	3866	42.72	-4	0
152	SLV 1	3	943	5149	-38.09	10.56	0.02
152	SLV 2	3	943	5149	-38.09	10.56	0.02
152	SLV 3	-11	-80	5938	10.23	2.16	0.02
152	SLV 4	-11	-80	5938	10.23	2.16	0.02
152	SLV 5	22	1608	3331	-71.68	16	0
152	SLV 6	22	1608	3331	-71.68	16	0
152	SLV 7	-24	-1801	5961	89.41	-11.98	0.02

Nodo	Cont.	Reazione a traslazione			Reazione a rotazione		
Ind.	N.br.	x	y	z	x	y	z
152	SLV 8	-24	-1801	5961	89.41	-11.98	0.02
152	SLV 9	25	1155	2562	-52.15	12.28	-0.01
152	SLV 10	25	1155	2562	-52.15	12.28	-0.01
152	SLV 11	-21	-2253	5192	108.95	-15.71	0.01
152	SLV 12	-21	-2253	5192	108.95	-15.71	0.01
152	SLV 13	12	-565	2585	27.03	-1.87	-0.02
152	SLV 14	12	-565	2585	27.03	-1.87	-0.02
152	SLV 15	-2	-1588	3374	75.36	-10.26	-0.01
152	SLV 16	-2	-1588	3374	75.36	-10.26	-0.01
153	SLU 1	11	86	5125	-3.49	10.68	-0.01
153	SLU 2	11	186	5036	-7.75	8.43	-0.01
153	SLU 3	11	89	5282	-3.58	11.06	-0.01
153	SLU 4	11	149	5228	-6.13	9.71	-0.01
153	SLU 5	11	187	5140	-7.75	8.68	-0.01
153	SLU 6	12	89	5385	-3.58	11.31	-0.01
153	SLU 7	11	149	5332	-6.13	9.96	-0.01
153	SLU 8	12	87	5332	-3.5	11.17	-0.01
153	SLU 9	11	147	5279	-6.05	9.82	-0.01
153	SLU 10	12	202	5628	-8.38	9.99	-0.01
153	SLU 11	13	104	5873	-4.21	12.63	-0.01
153	SLU 12	13	164	5820	-6.76	11.28	-0.01
153	SLU 13	13	202	5731	-8.38	10.24	-0.01
153	SLU 14	13	105	5977	-4.21	12.87	-0.01
153	SLU 15	13	165	5923	-6.76	11.52	-0.01
153	SLU 16	13	103	5924	-4.13	12.74	-0.01
153	SLU 17	13	163	5871	-6.68	11.39	-0.01
153	SLU 18	13	109	5970	-4.39	12.91	-0.01
153	SLU 19	13	169	5917	-6.94	11.56	-0.01
153	SLU 20	14	109	6074	-4.39	13.16	-0.01
153	SLU 21	13	169	6020	-6.95	11.81	-0.01
153	SLU 22	13	101	5705	-4.07	12.19	-0.01
153	SLU 23	12	201	5615	-8.33	9.94	-0.01
153	SLU 24	13	103	5861	-4.16	12.57	-0.01
153	SLU 25	13	163	5808	-6.71	11.22	-0.01
153	SLU 26	12	201	5719	-8.33	10.19	-0.01
153	SLU 27	13	104	5965	-4.16	12.82	-0.01
153	SLU 28	13	164	5911	-6.71	11.47	-0.01
153	SLU 29	13	102	5912	-4.08	12.68	-0.01
153	SLU 30	13	162	5858	-6.63	11.33	-0.01
153	SLU 31	14	217	6207	-8.96	11.5	-0.01
153	SLU 32	15	119	6453	-4.79	14.14	-0.01
153	SLU 33	14	179	6399	-7.34	12.79	-0.01
153	SLU 34	14	217	6311	-8.96	11.75	-0.01
153	SLU 35	15	120	6556	-4.79	14.39	-0.01
153	SLU 36	15	180	6503	-7.34	13.04	-0.01
153	SLU 37	15	118	6504	-4.71	14.25	-0.01
153	SLU 38	15	178	6450	-7.26	12.9	-0.01
153	SLU 39	15	124	6550	-4.97	14.42	-0.01
153	SLU 40	15	183	6496	-7.53	13.07	-0.01
153	SLU 41	15	124	6654	-4.98	14.67	-0.01
153	SLU 42	15	184	6600	-7.53	13.32	-0.01
153	SLU 43	14	107	6464	-4.34	13.36	-0.01
153	SLU 44	13	207	6375	-8.59	11.11	-0.01
153	SLU 45	14	109	6620	-4.42	13.75	-0.01
153	SLU 46	14	169	6567	-6.98	12.4	-0.01
153	SLU 47	14	207	6478	-8.6	11.36	-0.01
153	SLU 48	14	110	6724	-4.43	14	-0.01
153	SLU 49	14	170	6671	-6.98	12.65	-0.01
153	SLU 50	14	108	6671	-4.34	13.86	-0.01
153	SLU 51	14	168	6618	-6.9	12.51	-0.01
153	SLU 52	15	223	6966	-9.22	12.68	-0.01
153	SLU 53	16	125	7212	-5.05	15.31	-0.01
153	SLU 54	16	185	7159	-7.61	13.96	-0.01
153	SLU 55	15	223	7070	-9.23	12.92	-0.01
153	SLU 56	16	126	7316	-5.06	15.56	-0.01
153	SLU 57	16	186	7262	-7.61	14.21	-0.01
153	SLU 58	16	124	7263	-4.98	15.42	-0.01
153	SLU 59	16	184	7209	-7.53	14.07	-0.01
153	SLU 60	16	130	7309	-5.24	15.6	-0.01
153	SLU 61	16	190	7256	-7.79	14.25	-0.01
153	SLU 62	16	130	7413	-5.24	15.84	-0.01
153	SLU 63	16	190	7359	-7.79	14.49	-0.01
153	SLU 64	15	122	7044	-4.92	14.87	-0.01
153	SLU 65	15	222	6954	-9.18	12.62	-0.01
153	SLU 66	16	124	7200	-5.01	15.26	-0.01
153	SLU 67	16	184	7146	-7.56	13.91	-0.01
153	SLU 68	15	222	7058	-9.18	12.87	-0.01
153	SLU 69	16	125	7304	-5.01	15.51	-0.01
153	SLU 70	16	185	7250	-7.56	14.16	-0.01
153	SLU 71	16	123	7251	-4.93	15.37	-0.01
153	SLU 72	16	183	7197	-7.48	14.02	-0.01
153	SLU 73	17	238	7546	-9.81	14.19	-0.01
153	SLU 74	17	140	7792	-5.64	16.82	-0.01
153	SLU 75	17	200	7738	-8.19	15.47	-0.01
153	SLU 76	17	238	7650	-9.81	14.43	-0.01
153	SLU 77	18	140	7895	-5.64	17.07	-0.01
153	SLU 78	17	200	7842	-8.19	15.72	-0.01
153	SLU 79	17	138	7842	-5.56	16.93	-0.01
153	SLU 80	17	198	7789	-8.11	15.58	-0.01
153	SLU 81	18	144	7889	-5.82	17.11	-0.01
153	SLU 82	17	204	7835	-8.37	15.76	-0.01

Nodo	Cont.	Reazione a traslazione			Reazione a rotazione		
Ind.	N.br.	x	y	z	x	y	z
153	SLU 83	18	145	7992	-5.83	17.35	-0.01
153	SLU 84	18	205	7939	-8.38	16	-0.01
153	SLE RA 1	11	90	5291	-3.66	11.11	-0.01
153	SLE RA 2	11	157	5231	-6.49	9.61	-0.01
153	SLE RA 3	12	92	5395	-3.71	11.37	-0.01
153	SLE RA 4	12	132	5359	-5.42	10.47	-0.01
153	SLE RA 5	11	157	5300	-6.5	9.77	-0.01
153	SLE RA 6	12	92	5464	-3.72	11.53	-0.01
153	SLE RA 7	12	132	5428	-5.42	10.63	-0.01
153	SLE RA 8	12	91	5429	-3.66	11.44	-0.01
153	SLE RA 9	12	131	5393	-5.36	10.54	-0.01
153	SLE RA 10	12	168	5626	-6.91	10.65	-0.01
153	SLE RA 11	13	103	5789	-4.13	12.41	-0.01
153	SLE RA 12	13	143	5754	-5.84	11.51	-0.01
153	SLE RA 13	12	168	5695	-6.92	10.82	-0.01
153	SLE RA 14	13	103	5859	-4.14	12.57	-0.01
153	SLE RA 15	13	143	5823	-5.84	11.67	-0.01
153	SLE RA 16	13	102	5823	-4.08	12.48	-0.01
153	SLE RA 17	13	142	5788	-5.78	11.58	-0.01
153	SLE RA 18	13	105	5854	-4.26	12.6	-0.01
153	SLE RA 19	13	145	5819	-5.96	11.7	-0.01
153	SLE RA 20	13	106	5923	-4.26	12.76	-0.01
153	SLE RA 21	13	146	5888	-5.96	11.86	-0.01
153	SLE FR 1	11	90	5291	-3.66	11.11	-0.01
153	SLE FR 2	11	104	5279	-4.23	10.81	-0.01
153	SLE FR 3	12	91	5318	-3.66	11.17	-0.01
153	SLE FR 4	12	108	5448	-4.41	11.26	-0.01
153	SLE FR 5	12	95	5487	-3.84	11.62	-0.01
153	SLE FR 6	12	98	5572	-3.96	11.85	-0.01
153	SLE QP 1	11	90	5291	-3.66	11.11	-0.01
153	SLE QP 2	12	95	5460	-3.84	11.56	-0.01
153	SLD 1	21	421	6864	-17.69	22.33	0
153	SLD 2	21	421	6864	-17.69	22.33	0
153	SLD 3	17	-125	6694	5.56	19.18	0
153	SLD 4	17	-125	6694	5.56	19.18	0
153	SLD 5	20	1022	6139	-43.26	19.57	-0.01
153	SLD 6	20	1022	6139	-43.26	19.57	-0.01
153	SLD 7	8	-801	5572	34.25	9.06	0
153	SLD 8	8	-801	5572	34.25	9.06	0
153	SLD 9	16	991	5348	-41.93	14.05	-0.01
153	SLD 10	16	991	5348	-41.93	14.05	-0.01
153	SLD 11	4	-832	4780	35.59	3.54	-0.01
153	SLD 12	4	-832	4780	35.59	3.54	-0.01
153	SLD 13	6	315	4226	-13.24	3.93	-0.02
153	SLD 14	6	315	4226	-13.24	3.93	-0.02
153	SLD 15	3	-231	4055	10.02	0.78	-0.01
153	SLD 16	3	-231	4055	10.02	0.78	-0.01
153	SLV 1	34	864	8724	-36.47	37.17	0.01
153	SLV 2	34	864	8724	-36.47	37.17	0.01
153	SLV 3	25	-412	8323	17.77	29.18	0.02
153	SLV 4	25	-412	8323	17.77	29.18	0.02
153	SLV 5	32	2260	7047	-95.88	31.35	-0.01
153	SLV 6	32	2260	7047	-95.88	31.35	-0.01
153	SLV 7	2	-1992	5711	84.9	4.73	0.01
153	SLV 8	2	-1992	5711	84.9	4.73	0.01
153	SLV 9	21	2182	5208	-92.58	18.38	-0.02
153	SLV 10	21	2182	5208	-92.58	18.38	-0.02
153	SLV 11	-8	-2070	3873	88.21	-8.24	0
153	SLV 12	-8	-2070	3873	88.21	-8.24	0
153	SLV 13	-1	602	2596	-25.44	-6.07	-0.03
153	SLV 14	-1	602	2596	-25.44	-6.07	-0.03
153	SLV 15	-10	-674	2196	28.79	-14.06	-0.03
153	SLV 16	-10	-674	2196	28.79	-14.06	-0.03
154	SLU 1	0	-177	4745	10.14	-0.01	0
154	SLU 2	0	71	4451	-1.9	-0.41	0
154	SLU 3	0	-181	4899	10.39	-0.02	0
154	SLU 4	0	-31	4723	3.17	-0.26	0
154	SLU 5	0	70	4550	-1.76	-0.42	0
154	SLU 6	0	-182	4999	10.53	-0.03	0
154	SLU 7	0	-33	4823	3.3	-0.27	0
154	SLU 8	0	-181	4943	10.41	-0.03	0
154	SLU 9	0	-31	4767	3.19	-0.27	0
154	SLU 10	0	68	5278	-1.21	-0.42	0
154	SLU 11	0	-184	5726	11.08	-0.03	0
154	SLU 12	0	-35	5550	3.86	-0.27	0
154	SLU 13	0	66	5377	-1.07	-0.43	0
154	SLU 14	0	-186	5826	11.22	-0.04	0
154	SLU 15	0	-37	5650	3.99	-0.28	0
154	SLU 16	0	-184	5770	11.11	-0.04	0
154	SLU 17	0	-35	5594	3.88	-0.28	0
154	SLU 18	0	-183	5926	11.13	-0.02	0
154	SLU 19	0	-33	5750	3.9	-0.27	0
154	SLU 20	0	-184	6025	11.26	-0.03	0
154	SLU 21	0	-35	5849	4.04	-0.28	0
154	SLU 22	0	-186	5508	11	-0.02	0
154	SLU 23	0	63	5215	-1.04	-0.42	0
154	SLU 24	0	-189	5663	11.25	-0.03	0
154	SLU 25	0	-40	5487	4.03	-0.27	0
154	SLU 26	0	61	5314	-0.9	-0.43	0
154	SLU 27	0	-191	5762	11.39	-0.04	0
154	SLU 28	0	-42	5586	4.16	-0.28	0

Nodo	Cont.	Reazione a traslazione			Reazione a rotazione		
Ind.	N.br.	x	y	z	x	y	z
154	SLU 29	0	-189	5707	11.27	-0.04	0
154	SLU 30	0	-40	5531	4.05	-0.28	0
154	SLU 31	0	59	6042	-0.35	-0.43	0
154	SLU 32	0	-193	6490	11.94	-0.04	0
154	SLU 33	0	-44	6314	4.72	-0.28	0
154	SLU 34	0	58	6141	-0.21	-0.44	0
154	SLU 35	0	-195	6589	12.08	-0.05	0
154	SLU 36	0	-45	6413	4.85	-0.29	0
154	SLU 37	0	-193	6534	11.97	-0.05	0
154	SLU 38	0	-44	6358	4.74	-0.29	0
154	SLU 39	0	-191	6690	11.99	-0.03	0
154	SLU 40	0	-42	6514	4.76	-0.28	0
154	SLU 41	0	-193	6789	12.12	-0.04	0
154	SLU 42	0	-43	6613	4.9	-0.29	0
154	SLU 43	0	-228	5906	12.89	-0.01	0
154	SLU 44	0	21	5613	0.85	-0.41	0
154	SLU 45	0	-231	6061	13.14	-0.02	0
154	SLU 46	0	-82	5885	5.91	-0.26	0
154	SLU 47	0	19	5712	0.98	-0.42	0
154	SLU 48	0	-233	6160	13.27	-0.03	0
154	SLU 49	0	-83	5984	6.05	-0.27	0
154	SLU 50	0	-231	6105	13.16	-0.03	0
154	SLU 51	0	-82	5929	5.94	-0.27	0
154	SLU 52	0	17	6440	1.54	-0.42	0
154	SLU 53	0	-235	6888	13.83	-0.03	0
154	SLU 54	0	-85	6712	6.6	-0.27	0
154	SLU 55	0	16	6539	1.67	-0.43	0
154	SLU 56	0	-236	6987	13.97	-0.04	0
154	SLU 57	0	-87	6811	6.74	-0.28	0
154	SLU 58	0	-235	6932	13.85	-0.04	0
154	SLU 59	0	-85	6756	6.63	-0.28	0
154	SLU 60	0	-233	7087	13.87	-0.02	0
154	SLU 61	0	-84	6911	6.65	-0.27	0
154	SLU 62	0	-235	7187	14.01	-0.03	0
154	SLU 63	0	-85	7011	6.79	-0.27	0
154	SLU 64	0	-236	6670	13.75	-0.02	0
154	SLU 65	0	13	6376	1.71	-0.42	0
154	SLU 66	0	-239	6825	14	-0.03	0
154	SLU 67	0	-90	6649	6.77	-0.27	0
154	SLU 68	0	11	6476	1.84	-0.43	0
154	SLU 69	0	-241	6924	14.13	-0.04	0
154	SLU 70	0	-92	6748	6.91	-0.28	0
154	SLU 71	0	-239	6868	14.02	-0.04	0
154	SLU 72	0	-90	6692	6.8	-0.28	0
154	SLU 73	0	9	7203	2.4	-0.43	0
154	SLU 74	0	-243	7652	14.69	-0.04	0
154	SLU 75	0	-94	7475	7.46	-0.28	0
154	SLU 76	0	7	7303	2.53	-0.44	0
154	SLU 77	0	-245	7751	14.83	-0.05	0
154	SLU 78	0	-96	7575	7.6	-0.29	0
154	SLU 79	0	-243	7695	14.71	-0.05	0
154	SLU 80	0	-94	7519	7.49	-0.29	0
154	SLU 81	0	-241	7851	14.73	-0.03	0
154	SLU 82	0	-92	7675	7.51	-0.28	0
154	SLU 83	0	-243	7950	14.87	-0.04	0
154	SLU 84	0	-94	7774	7.65	-0.28	0
154	SLE RA 1	0	-180	4963	10.39	-0.01	0
154	SLE RA 2	0	-14	4767	2.36	-0.28	0
154	SLE RA 3	0	-182	5066	10.55	-0.02	0
154	SLE RA 4	0	-82	4949	5.74	-0.18	0
154	SLE RA 5	0	-15	4833	2.45	-0.29	0
154	SLE RA 6	0	-183	5132	10.64	-0.02	0
154	SLE RA 7	0	-84	5015	5.83	-0.19	0
154	SLE RA 8	0	-182	5095	10.57	-0.02	0
154	SLE RA 9	0	-82	4978	5.75	-0.18	0
154	SLE RA 10	0	-16	5318	2.82	-0.29	0
154	SLE RA 11	0	-184	5617	11.01	-0.02	0
154	SLE RA 12	0	-85	5500	6.2	-0.19	0
154	SLE RA 13	0	-17	5385	2.91	-0.29	0
154	SLE RA 14	0	-186	5683	11.1	-0.03	0
154	SLE RA 15	0	-86	5566	6.29	-0.19	0
154	SLE RA 16	0	-184	5646	11.03	-0.03	0
154	SLE RA 17	0	-85	5529	6.21	-0.19	0
154	SLE RA 18	0	-183	5750	11.04	-0.02	0
154	SLE RA 19	0	-84	5633	6.23	-0.18	0
154	SLE RA 20	0	-184	5816	11.14	-0.03	0
154	SLE RA 21	0	-85	5699	6.32	-0.19	0
154	SLE FR 1	0	-180	4963	10.39	-0.01	0
154	SLE FR 2	0	-146	4924	8.78	-0.06	0
154	SLE FR 3	0	-180	4989	10.42	-0.01	0
154	SLE FR 4	0	-148	5160	8.98	-0.07	0
154	SLE FR 5	0	-181	5225	10.62	-0.02	0
154	SLE FR 6	0	-181	5356	10.71	-0.02	0
154	SLE QP 1	0	-180	4963	10.39	-0.01	0
154	SLE QP 2	0	-181	5199	10.58	-0.01	0
154	SLD 1	-1	-161	4833	9.11	1.29	0
154	SLD 2	-1	-161	4833	9.11	1.29	0
154	SLD 3	4	-562	5171	29	3.51	0
154	SLD 4	4	-562	5171	29	3.51	0
154	SLD 5	-7	433	4576	-20.01	-2.98	0
154	SLD 6	-7	433	4576	-20.01	-2.98	0

Nodo	Cont.	Reazione a traslazione			Reazione a rotazione		
Ind.	N.br.	x	y	z	x	y	z
154	SLD 7	8	-903	5704	46.26	4.4	0
154	SLD 8	8	-903	5704	46.26	4.4	0
154	SLD 9	-8	542	4694	-25.09	-4.43	0
154	SLD 10	-8	542	4694	-25.09	-4.43	0
154	SLD 11	7	-794	5822	41.18	2.95	0
154	SLD 12	7	-794	5822	41.18	2.95	0
154	SLD 13	-4	201	5227	-7.83	-3.54	0
154	SLD 14	-4	201	5227	-7.83	-3.54	0
154	SLD 15	0	-200	5565	12.05	-1.32	0
154	SLD 16	0	-200	5565	12.05	-1.32	0
154	SLV 1	-2	-144	4324	7.65	3.09	0.01
154	SLV 2	-2	-144	4324	7.65	3.09	0.01
154	SLV 3	9	-1086	5128	54.37	8.56	0
154	SLV 4	9	-1086	5128	54.37	8.56	0
154	SLV 5	-17	1258	3718	-61.14	-7.38	0.01
154	SLV 6	-17	1258	3718	-61.14	-7.38	0.01
154	SLV 7	19	-1880	6396	94.57	10.86	-0.01
154	SLV 8	19	-1880	6396	94.57	10.86	-0.01
154	SLV 9	-19	1519	4002	-73.4	-10.89	0
154	SLV 10	-19	1519	4002	-73.4	-10.89	0
154	SLV 11	17	-1620	6680	82.31	7.35	-0.01
154	SLV 12	17	-1620	6680	82.31	7.35	-0.01
154	SLV 13	-10	724	5270	-33.2	-8.59	-0.01
154	SLV 14	-10	724	5270	-33.2	-8.59	-0.01
154	SLV 15	1	-217	6074	13.51	-3.12	-0.01
154	SLV 16	1	-217	6074	13.51	-3.12	-0.01
155	SLU 1	-4	1003	3928	-34.83	-3	-0.01
155	SLU 2	-3	1049	3900	-36.97	-2.06	-0.01
155	SLU 3	-4	1043	4054	-36.21	-3.12	-0.01
155	SLU 4	-3	1070	4037	-37.49	-2.56	-0.01
155	SLU 5	-3	1076	3987	-37.9	-2.15	-0.01
155	SLU 6	-4	1070	4140	-37.14	-3.21	-0.01
155	SLU 7	-4	1098	4123	-38.42	-2.65	-0.01
155	SLU 8	-4	1057	4101	-36.69	-3.18	-0.01
155	SLU 9	-4	1085	4084	-37.98	-2.61	-0.01
155	SLU 10	-3	1204	4401	-42.31	-2.58	-0.01
155	SLU 11	-5	1198	4554	-41.55	-3.65	-0.02
155	SLU 12	-4	1226	4537	-42.83	-3.08	-0.02
155	SLU 13	-4	1231	4487	-43.24	-2.67	-0.02
155	SLU 14	-5	1225	4640	-42.48	-3.74	-0.02
155	SLU 15	-4	1253	4624	-43.76	-3.17	-0.02
155	SLU 16	-5	1212	4601	-42.03	-3.7	-0.02
155	SLU 17	-4	1240	4584	-43.32	-3.14	-0.02
155	SLU 18	-5	1225	4643	-42.46	-3.75	-0.02
155	SLU 19	-4	1252	4626	-43.74	-3.18	-0.02
155	SLU 20	-5	1252	4729	-43.39	-3.84	-0.02
155	SLU 21	-4	1279	4712	-44.68	-3.27	-0.02
155	SLU 22	-5	1153	4408	-40	-3.49	-0.01
155	SLU 23	-3	1199	4380	-42.14	-2.55	-0.01
155	SLU 24	-5	1193	4533	-41.37	-3.62	-0.02
155	SLU 25	-4	1220	4517	-42.66	-3.05	-0.02
155	SLU 26	-4	1226	4466	-43.07	-2.64	-0.01
155	SLU 27	-5	1220	4620	-42.3	-3.71	-0.02
155	SLU 28	-4	1247	4603	-43.59	-3.14	-0.02
155	SLU 29	-5	1207	4580	-41.86	-3.67	-0.02
155	SLU 30	-4	1235	4564	-43.14	-3.11	-0.02
155	SLU 31	-4	1354	4880	-47.48	-3.07	-0.02
155	SLU 32	-6	1348	5034	-46.71	-4.14	-0.02
155	SLU 33	-5	1375	5017	-48	-3.58	-0.02
155	SLU 34	-4	1381	4967	-48.41	-3.16	-0.02
155	SLU 35	-6	1375	5120	-47.64	-4.23	-0.02
155	SLU 36	-5	1402	5103	-48.93	-3.67	-0.02
155	SLU 37	-6	1362	5081	-47.2	-4.19	-0.02
155	SLU 38	-5	1390	5064	-48.48	-3.63	-0.02
155	SLU 39	-6	1375	5122	-47.62	-4.24	-0.02
155	SLU 40	-5	1402	5106	-48.91	-3.67	-0.02
155	SLU 41	-6	1402	5209	-48.56	-4.33	-0.02
155	SLU 42	-5	1429	5192	-49.84	-3.76	-0.02
155	SLU 43	-5	1253	4942	-43.51	-3.73	-0.02
155	SLU 44	-4	1298	4914	-45.65	-2.79	-0.02
155	SLU 45	-5	1293	5068	-44.89	-3.85	-0.02
155	SLU 46	-5	1320	5051	-46.17	-3.29	-0.02
155	SLU 47	-4	1326	5000	-46.58	-2.88	-0.02
155	SLU 48	-5	1320	5154	-45.82	-3.94	-0.02
155	SLU 49	-5	1347	5137	-47.1	-3.38	-0.02
155	SLU 50	-5	1307	5114	-45.37	-3.91	-0.02
155	SLU 51	-5	1334	5098	-46.66	-3.34	-0.02
155	SLU 52	-5	1454	5414	-50.99	-3.31	-0.02
155	SLU 53	-6	1448	5568	-50.23	-4.38	-0.02
155	SLU 54	-5	1475	5551	-51.51	-3.81	-0.02
155	SLU 55	-5	1481	5501	-51.92	-3.4	-0.02
155	SLU 56	-6	1475	5654	-51.16	-4.47	-0.02
155	SLU 57	-5	1502	5638	-52.44	-3.9	-0.02
155	SLU 58	-6	1462	5615	-50.71	-4.43	-0.02
155	SLU 59	-5	1489	5598	-52	-3.87	-0.02
155	SLU 60	-6	1474	5656	-51.14	-4.48	-0.02
155	SLU 61	-5	1502	5640	-52.42	-3.91	-0.02
155	SLU 62	-6	1501	5743	-52.07	-4.57	-0.02
155	SLU 63	-5	1529	5726	-53.35	-4	-0.02
155	SLU 64	-6	1403	5421	-48.67	-4.22	-0.02
155	SLU 65	-4	1448	5394	-50.82	-3.28	-0.02

Nodo	Cont.	Reazione a traslazione			Reazione a rotazione		
Ind.	N.br.	x	y	z	x	y	z
155	SLU 66	-6	1442	5547	-50.05	-4.35	-0.02
155	SLU 67	-5	1470	5531	-51.34	-3.78	-0.02
155	SLU 68	-5	1475	5480	-51.75	-3.37	-0.02
155	SLU 69	-6	1470	5634	-50.98	-4.44	-0.02
155	SLU 70	-5	1497	5617	-52.27	-3.87	-0.02
155	SLU 71	-6	1457	5594	-50.54	-4.4	-0.02
155	SLU 72	-5	1484	5578	-51.82	-3.84	-0.02
155	SLU 73	-5	1603	5894	-56.16	-3.8	-0.02
155	SLU 74	-7	1598	6048	-55.39	-4.87	-0.02
155	SLU 75	-6	1625	6031	-56.68	-4.31	-0.02
155	SLU 76	-5	1630	5981	-57.09	-3.89	-0.02
155	SLU 77	-7	1625	6134	-56.32	-4.96	-0.02
155	SLU 78	-6	1652	6117	-57.61	-4.4	-0.02
155	SLU 79	-7	1612	6094	-55.88	-4.92	-0.02
155	SLU 80	-6	1639	6078	-57.16	-4.36	-0.02
155	SLU 81	-7	1624	6136	-56.3	-4.97	-0.02
155	SLU 82	-6	1652	6120	-57.59	-4.41	-0.02
155	SLU 83	-7	1651	6222	-57.23	-5.06	-0.02
155	SLU 84	-6	1679	6206	-58.52	-4.49	-0.02
155	SLE RA 1	-4	1046	4065	-36.31	-3.14	-0.01
155	SLE RA 2	-3	1076	4047	-37.73	-2.51	-0.01
155	SLE RA 3	-4	1073	4149	-37.22	-3.22	-0.01
155	SLE RA 4	-4	1091	4138	-38.08	-2.85	-0.01
155	SLE RA 5	-4	1095	4104	-38.36	-2.57	-0.01
155	SLE RA 6	-4	1091	4206	-37.85	-3.28	-0.01
155	SLE RA 7	-4	1109	4195	-38.7	-2.91	-0.01
155	SLE RA 8	-4	1082	4180	-37.55	-3.26	-0.01
155	SLE RA 9	-4	1100	4169	-38.41	-2.88	-0.01
155	SLE RA 10	-4	1180	4380	-41.29	-2.86	-0.01
155	SLE RA 11	-5	1176	4482	-40.78	-3.57	-0.02
155	SLE RA 12	-4	1194	4471	-41.64	-3.2	-0.02
155	SLE RA 13	-4	1198	4438	-41.92	-2.92	-0.01
155	SLE RA 14	-5	1194	4540	-41.41	-3.63	-0.02
155	SLE RA 15	-4	1212	4529	-42.26	-3.26	-0.02
155	SLE RA 16	-5	1185	4514	-41.11	-3.61	-0.02
155	SLE RA 17	-4	1204	4503	-41.97	-3.23	-0.02
155	SLE RA 18	-5	1194	4541	-41.39	-3.64	-0.02
155	SLE RA 19	-4	1212	4530	-42.25	-3.26	-0.02
155	SLE RA 20	-5	1212	4599	-42.01	-3.7	-0.02
155	SLE RA 21	-4	1230	4588	-42.87	-3.32	-0.02
155	SLE FR 1	-4	1046	4065	-36.31	-3.14	-0.01
155	SLE FR 2	-4	1052	4061	-36.59	-3.01	-0.01
155	SLE FR 3	-4	1053	4088	-36.56	-3.16	-0.01
155	SLE FR 4	-4	1096	4204	-38.12	-3.16	-0.01
155	SLE FR 5	-4	1097	4231	-38.08	-3.31	-0.01
155	SLE FR 6	-5	1120	4303	-38.85	-3.39	-0.01
155	SLE QP 1	-4	1046	4065	-36.31	-3.14	-0.01
155	SLE QP 2	-4	1090	4208	-37.83	-3.29	-0.01
155	SLD 1	3	993	3248	-36.32	-1.88	0
155	SLD 2	3	993	3248	-36.32	-1.88	0
155	SLD 3	11	503	2915	-15.65	3.12	0
155	SLD 4	11	503	2915	-15.65	3.12	0
155	SLD 5	-13	1804	4425	-68.72	-10.44	0
155	SLD 6	-13	1804	4425	-68.72	-10.44	0
155	SLD 7	11	171	3315	0.16	6.21	-0.01
155	SLD 8	11	171	3315	0.16	6.21	-0.01
155	SLD 9	-20	2010	5101	-75.83	-12.79	-0.01
155	SLD 10	-20	2010	5101	-75.83	-12.79	-0.01
155	SLD 11	4	376	3991	-6.94	3.87	-0.02
155	SLD 12	4	376	3991	-6.94	3.87	-0.02
155	SLD 13	-20	1677	5501	-60.01	-9.69	-0.03
155	SLD 14	-20	1677	5501	-60.01	-9.69	-0.03
155	SLD 15	-12	1187	5167	-39.34	-4.7	-0.03
155	SLD 16	-12	1187	5167	-39.34	-4.7	-0.03
155	SLV 1	14	867	2003	-34.32	-0.12	0.03
155	SLV 2	14	867	2003	-34.32	-0.12	0.03
155	SLV 3	33	-276	1225	13.89	12.68	0.02
155	SLV 4	33	-276	1225	13.89	12.68	0.02
155	SLV 5	-28	2756	4727	-109.89	-21.76	0.01
155	SLV 6	-28	2756	4727	-109.89	-21.76	0.01
155	SLV 7	36	-1053	2133	50.8	20.92	-0.02
155	SLV 8	36	-1053	2133	50.8	20.92	-0.02
155	SLV 9	-44	3233	6283	-126.46	-27.5	-0.01
155	SLV 10	-44	3233	6283	-126.46	-27.5	-0.01
155	SLV 11	19	-576	3689	34.23	15.18	-0.04
155	SLV 12	19	-576	3689	34.23	15.18	-0.04
155	SLV 13	-42	2457	7191	-89.55	-19.26	-0.04
155	SLV 14	-42	2457	7191	-89.55	-19.26	-0.04
155	SLV 15	-23	1314	6412	-41.35	-6.46	-0.05
155	SLV 16	-23	1314	6412	-41.35	-6.46	-0.05
156	SLU 1	1	-623	4653	29.57	1.51	0
156	SLU 2	1	-625	4596	29.61	1.51	0
156	SLU 3	1	-642	4830	30.52	1.56	0
156	SLU 4	1	-643	4795	30.55	1.56	0
156	SLU 5	1	-638	4720	30.26	1.55	0
156	SLU 6	1	-655	4954	31.17	1.59	0
156	SLU 7	1	-656	4920	31.19	1.6	0
156	SLU 8	1	-649	4902	30.86	1.57	0
156	SLU 9	1	-650	4868	30.88	1.58	0
156	SLU 10	1	-713	5396	33.98	1.78	0
156	SLU 11	1	-730	5631	34.89	1.83	0

Nodo	Cont.	Reazione a traslazione			Reazione a rotazione		
Ind.	N.br.	x	y	z	x	y	z
156	SLU 12	1	-732	5596	34.92	1.83	0
156	SLU 13	1	-726	5521	34.63	1.82	0
156	SLU 14	1	-743	5755	35.54	1.86	0
156	SLU 15	1	-744	5721	35.56	1.87	0
156	SLU 16	1	-737	5703	35.23	1.85	0
156	SLU 17	1	-738	5668	35.25	1.85	0
156	SLU 18	1	-749	5797	35.82	1.9	0
156	SLU 19	1	-750	5763	35.84	1.9	0
156	SLU 20	1	-762	5922	36.46	1.93	0
156	SLU 21	1	-763	5887	36.48	1.93	0
156	SLU 22	1	-695	5363	33.17	1.72	0
156	SLU 23	1	-697	5305	33.21	1.73	0
156	SLU 24	1	-714	5540	34.12	1.77	0
156	SLU 25	1	-715	5505	34.15	1.77	0
156	SLU 26	1	-709	5430	33.85	1.76	0
156	SLU 27	1	-726	5664	34.76	1.81	0
156	SLU 28	1	-728	5630	34.79	1.81	0
156	SLU 29	1	-720	5612	34.45	1.79	0
156	SLU 30	1	-721	5577	34.48	1.79	0
156	SLU 31	1	-785	6106	37.58	2	0
156	SLU 32	1	-802	6341	38.49	2.04	0
156	SLU 33	1	-803	6306	38.52	2.05	0
156	SLU 34	1	-797	6231	38.22	2.03	0
156	SLU 35	1	-815	6465	39.13	2.08	0
156	SLU 36	1	-816	6431	39.16	2.08	0
156	SLU 37	1	-808	6413	38.83	2.06	0
156	SLU 38	1	-809	6378	38.85	2.06	0
156	SLU 39	1	-821	6507	39.41	2.11	0
156	SLU 40	1	-822	6472	39.44	2.11	0
156	SLU 41	1	-833	6631	40.06	2.14	0
156	SLU 42	1	-834	6597	40.08	2.15	0
156	SLU 43	1	-786	5806	37.21	1.89	0
156	SLU 44	1	-788	5748	37.25	1.89	0
156	SLU 45	1	-805	5983	38.16	1.94	0
156	SLU 46	1	-806	5948	38.19	1.94	0
156	SLU 47	1	-801	5873	37.89	1.92	0
156	SLU 48	1	-818	6107	38.8	1.97	0
156	SLU 49	1	-819	6073	38.83	1.97	0
156	SLU 50	1	-812	6055	38.49	1.95	0
156	SLU 51	1	-813	6020	38.52	1.96	0
156	SLU 52	1	-876	6549	41.62	2.16	0
156	SLU 53	2	-893	6783	42.53	2.21	0
156	SLU 54	2	-894	6749	42.56	2.21	0
156	SLU 55	1	-889	6673	42.26	2.2	0
156	SLU 56	2	-906	6908	43.17	2.24	0
156	SLU 57	2	-907	6873	43.2	2.25	0
156	SLU 58	2	-900	6855	42.87	2.23	0
156	SLU 59	2	-901	6821	42.89	2.23	0
156	SLU 60	2	-912	6950	43.45	2.27	0
156	SLU 61	2	-913	6915	43.48	2.28	0
156	SLU 62	2	-925	7074	44.1	2.31	0
156	SLU 63	2	-926	7040	44.12	2.31	0
156	SLU 64	1	-857	6516	40.81	2.1	0
156	SLU 65	1	-859	6458	40.85	2.1	0
156	SLU 66	1	-876	6692	41.76	2.15	0
156	SLU 67	1	-877	6658	41.78	2.15	0
156	SLU 68	1	-872	6583	41.49	2.14	0
156	SLU 69	1	-889	6817	42.4	2.19	0
156	SLU 70	1	-890	6782	42.43	2.19	0
156	SLU 71	1	-883	6765	42.09	2.17	0
156	SLU 72	1	-884	6730	42.12	2.17	0
156	SLU 73	2	-947	7259	45.22	2.38	0
156	SLU 74	2	-964	7493	46.13	2.42	0
156	SLU 75	2	-965	7459	46.15	2.43	0
156	SLU 76	2	-960	7383	45.86	2.41	0
156	SLU 77	2	-977	7618	46.77	2.46	0
156	SLU 78	2	-978	7583	46.8	2.46	0
156	SLU 79	2	-971	7565	46.46	2.44	0
156	SLU 80	2	-972	7531	46.49	2.44	0
156	SLU 81	2	-983	7660	47.05	2.49	0
156	SLU 82	2	-984	7625	47.08	2.49	0
156	SLU 83	2	-996	7784	47.69	2.52	0
156	SLU 84	2	-997	7749	47.72	2.52	0
156	SLE RA 1	1	-644	4856	30.6	1.57	0
156	SLE RA 2	1	-645	4818	30.63	1.57	0
156	SLE RA 3	1	-656	4974	31.23	1.6	0
156	SLE RA 4	1	-657	4951	31.25	1.6	0
156	SLE RA 5	1	-654	4901	31.06	1.59	0
156	SLE RA 6	1	-665	5057	31.66	1.63	0
156	SLE RA 7	1	-666	5034	31.68	1.63	0
156	SLE RA 8	1	-661	5022	31.46	1.61	0
156	SLE RA 9	1	-662	4999	31.47	1.62	0
156	SLE RA 10	1	-704	5351	33.54	1.75	0
156	SLE RA 11	1	-715	5508	34.15	1.78	0
156	SLE RA 12	1	-716	5485	34.16	1.79	0
156	SLE RA 13	1	-712	5434	33.97	1.78	0
156	SLE RA 14	1	-724	5591	34.58	1.81	0
156	SLE RA 15	1	-724	5568	34.59	1.81	0
156	SLE RA 16	1	-720	5556	34.37	1.79	0
156	SLE RA 17	1	-720	5533	34.39	1.8	0
156	SLE RA 18	1	-728	5619	34.76	1.83	0

Nodo	Cont.	Reazione a traslazione			Reazione a rotazione		
Ind.	N.br.	x	y	z	x	y	z
156	SLE RA 19	1	-728	5596	34.78	1.83	0
156	SLE RA 20	1	-736	5702	35.19	1.85	0
156	SLE RA 21	1	-737	5679	35.21	1.85	0
156	SLE FR 1	1	-644	4856	30.6	1.57	0
156	SLE FR 2	1	-644	4848	30.61	1.57	0
156	SLE FR 3	1	-647	4889	30.77	1.58	0
156	SLE FR 4	1	-669	5077	31.85	1.65	0
156	SLE FR 5	1	-672	5118	32.02	1.66	0
156	SLE FR 6	1	-686	5237	32.68	1.7	0
156	SLE QP 1	1	-644	4856	30.6	1.57	0
156	SLE QP 2	1	-669	5085	31.85	1.65	0
156	SLD 1	1	-690	3892	32.38	4.24	0.01
156	SLD 2	1	-690	3892	32.38	4.24	0.01
156	SLD 3	5	-1144	4445	55.13	6.17	0
156	SLD 4	5	-1144	4445	55.13	6.17	0
156	SLD 5	-5	14	3888	-2.49	-0.51	0.01
156	SLD 6	-5	14	3888	-2.49	-0.51	0.01
156	SLD 7	9	-1501	5732	73.33	5.93	-0.01
156	SLD 8	9	-1501	5732	73.33	5.93	-0.01
156	SLD 9	-6	163	4438	-9.63	-2.64	0.01
156	SLD 10	-6	163	4438	-9.63	-2.64	0.01
156	SLD 11	7	-1352	6281	66.19	3.8	-0.01
156	SLD 12	7	-1352	6281	66.19	3.8	-0.01
156	SLD 13	-3	-194	5724	8.57	-2.88	0
156	SLD 14	-3	-194	5724	8.57	-2.88	0
156	SLD 15	1	-648	6277	31.32	-0.95	-0.01
156	SLD 16	1	-648	6277	31.32	-0.95	-0.01
156	SLV 1	1	-711	2306	32.83	7.74	0.02
156	SLV 2	1	-711	2306	32.83	7.74	0.02
156	SLV 3	11	-1771	3600	85.91	12.66	0
156	SLV 4	11	-1771	3600	85.91	12.66	0
156	SLV 5	-15	926	2288	-48.36	-3.99	0.03
156	SLV 6	-15	926	2288	-48.36	-3.99	0.03
156	SLV 7	20	-2607	6602	128.57	12.41	-0.02
156	SLV 8	20	-2607	6602	128.57	12.41	-0.02
156	SLV 9	-18	1269	3567	-64.87	-9.12	0.03
156	SLV 10	-18	1269	3567	-64.87	-9.12	0.03
156	SLV 11	17	-2264	7881	112.06	7.28	-0.03
156	SLV 12	17	-2264	7881	112.06	7.28	-0.03
156	SLV 13	-9	433	6570	-22.21	-9.37	0
156	SLV 14	-9	433	6570	-22.21	-9.37	0
156	SLV 15	1	-627	7864	30.87	-4.45	-0.01
156	SLV 16	1	-627	7864	30.87	-4.45	-0.01
157	SLU 1	5	-679	3960	32.93	2.21	-0.03
157	SLU 2	5	-678	3901	32.81	2.15	-0.03
157	SLU 3	5	-703	4084	34.07	2.27	-0.03
157	SLU 4	5	-702	4049	34.01	2.24	-0.03
157	SLU 5	5	-695	3978	33.61	2.18	-0.03
157	SLU 6	6	-720	4160	34.87	2.3	-0.03
157	SLU 7	5	-719	4125	34.8	2.27	-0.03
157	SLU 8	5	-713	4113	34.52	2.27	-0.03
157	SLU 9	5	-712	4078	34.46	2.24	-0.03
157	SLU 10	6	-774	4561	37.6	2.52	-0.04
157	SLU 11	7	-799	4744	38.86	2.65	-0.04
157	SLU 12	6	-798	4709	38.79	2.61	-0.04
157	SLU 13	6	-791	4638	38.4	2.55	-0.04
157	SLU 14	7	-815	4820	39.66	2.68	-0.04
157	SLU 15	6	-815	4785	39.59	2.64	-0.04
157	SLU 16	6	-809	4773	39.31	2.65	-0.04
157	SLU 17	6	-808	4738	39.24	2.61	-0.04
157	SLU 18	7	-816	4902	39.76	2.74	-0.04
157	SLU 19	7	-816	4867	39.69	2.71	-0.04
157	SLU 20	7	-833	4979	40.56	2.78	-0.04
157	SLU 21	7	-832	4944	40.49	2.74	-0.04
157	SLU 22	6	-761	4540	37.03	2.57	-0.04
157	SLU 23	6	-760	4481	36.91	2.51	-0.03
157	SLU 24	6	-784	4664	38.17	2.63	-0.04
157	SLU 25	6	-784	4628	38.1	2.59	-0.04
157	SLU 26	6	-776	4558	37.71	2.54	-0.04
157	SLU 27	6	-801	4740	38.97	2.66	-0.04
157	SLU 28	6	-800	4705	38.9	2.63	-0.04
157	SLU 29	6	-794	4693	38.62	2.63	-0.04
157	SLU 30	6	-793	4657	38.55	2.6	-0.04
157	SLU 31	7	-856	5141	41.7	2.88	-0.04
157	SLU 32	7	-880	5323	42.96	3	-0.04
157	SLU 33	7	-880	5288	42.89	2.97	-0.04
157	SLU 34	7	-872	5217	42.49	2.91	-0.04
157	SLU 35	8	-897	5400	43.75	3.04	-0.04
157	SLU 36	7	-896	5365	43.69	3	-0.04
157	SLU 37	7	-890	5352	43.4	3.01	-0.04
157	SLU 38	7	-889	5317	43.34	2.97	-0.04
157	SLU 39	8	-898	5482	43.86	3.1	-0.04
157	SLU 40	8	-897	5447	43.79	3.07	-0.04
157	SLU 41	8	-914	5559	44.66	3.13	-0.05
157	SLU 42	8	-914	5523	44.59	3.1	-0.04
157	SLU 43	7	-855	4949	41.4	2.75	-0.04
157	SLU 44	6	-854	4891	41.29	2.69	-0.04
157	SLU 45	7	-879	5073	42.55	2.81	-0.04
157	SLU 46	7	-878	5038	42.48	2.77	-0.04
157	SLU 47	6	-871	4967	42.09	2.72	-0.04
157	SLU 48	7	-896	5150	43.35	2.84	-0.04

Nodo	Cont.	Reazione a traslazione			Reazione a rotazione		
Ind.	N.br.	x	y	z	x	y	z
157	SLU 49	7	-895	5114	43.28	2.81	-0.04
157	SLU 50	7	-889	5102	43	2.81	-0.04
157	SLU 51	7	-888	5067	42.93	2.78	-0.04
157	SLU 52	7	-950	5550	46.07	3.06	-0.04
157	SLU 53	8	-975	5733	47.33	3.18	-0.04
157	SLU 54	8	-974	5698	47.26	3.15	-0.04
157	SLU 55	7	-967	5627	46.87	3.09	-0.04
157	SLU 56	8	-991	5809	48.13	3.22	-0.05
157	SLU 57	8	-991	5774	48.06	3.18	-0.04
157	SLU 58	8	-984	5762	47.78	3.19	-0.04
157	SLU 59	8	-984	5727	47.71	3.15	-0.04
157	SLU 60	8	-992	5892	48.23	3.28	-0.05
157	SLU 61	8	-992	5857	48.17	3.25	-0.05
157	SLU 62	8	-1009	5968	49.03	3.32	-0.05
157	SLU 63	8	-1008	5933	48.96	3.28	-0.05
157	SLU 64	8	-937	5529	45.5	3.11	-0.04
157	SLU 65	7	-936	5470	45.39	3.05	-0.04
157	SLU 66	8	-960	5653	46.65	3.17	-0.04
157	SLU 67	8	-960	5618	46.58	3.13	-0.04
157	SLU 68	7	-952	5547	46.18	3.08	-0.04
157	SLU 69	8	-977	5729	47.44	3.2	-0.04
157	SLU 70	8	-976	5694	47.38	3.17	-0.04
157	SLU 71	8	-970	5682	47.09	3.17	-0.04
157	SLU 72	8	-969	5647	47.03	3.14	-0.04
157	SLU 73	8	-1031	6130	50.17	3.42	-0.05
157	SLU 74	9	-1056	6313	51.43	3.54	-0.05
157	SLU 75	9	-1055	6277	51.36	3.51	-0.05
157	SLU 76	8	-1048	6207	50.97	3.45	-0.05
157	SLU 77	9	-1073	6389	52.23	3.58	-0.05
157	SLU 78	9	-1072	6354	52.16	3.54	-0.05
157	SLU 79	9	-1066	6342	51.88	3.55	-0.05
157	SLU 80	9	-1065	6306	51.81	3.51	-0.05
157	SLU 81	9	-1074	6471	52.33	3.64	-0.05
157	SLU 82	9	-1073	6436	52.26	3.61	-0.05
157	SLU 83	9	-1090	6548	53.13	3.67	-0.05
157	SLU 84	9	-1090	6513	53.06	3.64	-0.05
157	SLE RA 1	6	-703	4125	34.1	2.31	-0.03
157	SLE RA 2	5	-702	4086	34.02	2.27	-0.03
157	SLE RA 3	6	-718	4208	34.86	2.35	-0.03
157	SLE RA 4	6	-718	4185	34.82	2.33	-0.03
157	SLE RA 5	5	-713	4137	34.56	2.29	-0.03
157	SLE RA 6	6	-729	4259	35.39	2.37	-0.03
157	SLE RA 7	6	-729	4236	35.35	2.35	-0.03
157	SLE RA 8	6	-725	4227	35.16	2.35	-0.03
157	SLE RA 9	6	-724	4204	35.12	2.33	-0.03
157	SLE RA 10	6	-766	4526	37.21	2.52	-0.04
157	SLE RA 11	6	-782	4648	38.05	2.6	-0.04
157	SLE RA 12	6	-782	4625	38.01	2.58	-0.04
157	SLE RA 13	6	-777	4577	37.74	2.54	-0.04
157	SLE RA 14	6	-793	4699	38.58	2.62	-0.04
157	SLE RA 15	6	-793	4676	38.54	2.6	-0.04
157	SLE RA 16	6	-789	4667	38.35	2.6	-0.04
157	SLE RA 17	6	-788	4644	38.31	2.58	-0.04
157	SLE RA 18	7	-794	4754	38.65	2.67	-0.04
157	SLE RA 19	6	-794	4730	38.61	2.64	-0.04
157	SLE RA 20	7	-805	4805	39.19	2.69	-0.04
157	SLE RA 21	7	-805	4781	39.14	2.67	-0.04
157	SLE FR 1	6	-703	4125	34.1	2.31	-0.03
157	SLE FR 2	6	-703	4118	34.08	2.3	-0.03
157	SLE FR 3	6	-707	4146	34.31	2.32	-0.03
157	SLE FR 4	6	-730	4306	35.45	2.41	-0.03
157	SLE FR 5	6	-735	4334	35.68	2.43	-0.03
157	SLE FR 6	6	-748	4440	36.38	2.49	-0.03
157	SLE QP 1	6	-703	4125	34.1	2.31	-0.03
157	SLE QP 2	6	-730	4314	35.46	2.42	-0.03
157	SLD 1	11	-180	5080	8.93	5.84	-0.05
157	SLD 2	11	-180	5080	8.93	5.84	-0.05
157	SLD 3	9	-642	5555	32.1	5.16	-0.06
157	SLD 4	9	-642	5555	32.1	5.16	-0.06
157	SLD 5	10	134	3823	-7.63	4.49	-0.03
157	SLD 6	10	134	3823	-7.63	4.49	-0.03
157	SLD 7	5	-1403	5407	69.59	2.2	-0.05
157	SLD 8	5	-1403	5407	69.59	2.2	-0.05
157	SLD 9	7	-57	3221	1.34	2.64	-0.02
157	SLD 10	7	-57	3221	1.34	2.64	-0.02
157	SLD 11	2	-1595	4805	78.56	0.35	-0.04
157	SLD 12	2	-1595	4805	78.56	0.35	-0.04
157	SLD 13	3	-819	3073	38.83	-0.32	-0.01
157	SLD 14	3	-819	3073	38.83	-0.32	-0.01
157	SLD 15	1	-1280	3548	62	-1	-0.02
157	SLD 16	1	-1280	3548	62	-1	-0.02
157	SLV 1	17	539	6080	-25.89	10.57	-0.07
157	SLV 2	17	539	6080	-25.89	10.57	-0.07
157	SLV 3	13	-537	7191	28.13	8.89	-0.08
157	SLV 4	13	-537	7191	28.13	8.89	-0.08
157	SLV 5	15	1282	3159	-64.88	7.41	-0.03
157	SLV 6	15	1282	3159	-64.88	7.41	-0.03
157	SLV 7	3	-2303	6862	115.2	1.81	-0.07
157	SLV 8	3	-2303	6862	115.2	1.81	-0.07
157	SLV 9	9	843	1766	-44.27	3.03	0
157	SLV 10	9	843	1766	-44.27	3.03	0

Nodo	Cont.	Reazione a traslazione			Reazione a rotazione		
Ind.	N.br.	x	y	z	x	y	z
157	SLV 11	-3	-2742	5469	135.81	-2.57	-0.04
157	SLV 12	-3	-2742	5469	135.81	-2.57	-0.04
157	SLV 13	-2	-923	1437	42.8	-4.05	0.02
157	SLV 14	-2	-923	1437	42.8	-4.05	0.02
157	SLV 15	-5	-1999	2548	96.82	-5.73	0.01
157	SLV 16	-5	-1999	2548	96.82	-5.73	0.01
158	SLU 1	6	141	1837	-4.42	1.37	0.12
158	SLU 2	6	138	1818	-4.32	1.37	0.12
158	SLU 3	6	149	1889	-4.68	1.41	0.12
158	SLU 4	6	147	1877	-4.62	1.41	0.12
158	SLU 5	6	143	1852	-4.49	1.39	0.12
158	SLU 6	6	154	1923	-4.84	1.43	0.12
158	SLU 7	6	152	1911	-4.78	1.43	0.12
158	SLU 8	6	152	1906	-4.76	1.42	0.12
158	SLU 9	6	150	1894	-4.7	1.42	0.12
158	SLU 10	7	162	2157	-5.08	1.62	0.14
158	SLU 11	7	173	2228	-5.43	1.66	0.14
158	SLU 12	7	171	2216	-5.37	1.66	0.14
158	SLU 13	7	168	2191	-5.25	1.64	0.14
158	SLU 14	8	179	2262	-5.6	1.68	0.14
158	SLU 15	7	177	2250	-5.54	1.68	0.14
158	SLU 16	7	176	2245	-5.52	1.67	0.14
158	SLU 17	7	174	2233	-5.46	1.66	0.14
158	SLU 18	8	176	2322	-5.5	1.73	0.15
158	SLU 19	8	174	2310	-5.44	1.72	0.15
158	SLU 20	8	181	2356	-5.67	1.75	0.15
158	SLU 21	8	179	2344	-5.61	1.75	0.15
158	SLU 22	7	173	2091	-5.44	1.58	0.14
158	SLU 23	7	170	2071	-5.34	1.58	0.13
158	SLU 24	7	181	2142	-5.69	1.62	0.14
158	SLU 25	7	179	2130	-5.63	1.62	0.14
158	SLU 26	7	175	2105	-5.51	1.6	0.14
158	SLU 27	7	186	2176	-5.86	1.64	0.14
158	SLU 28	7	184	2164	-5.8	1.64	0.14
158	SLU 29	7	183	2159	-5.77	1.63	0.14
158	SLU 30	7	181	2147	-5.71	1.62	0.14
158	SLU 31	8	194	2410	-6.09	1.82	0.15
158	SLU 32	8	205	2481	-6.45	1.86	0.16
158	SLU 33	8	203	2469	-6.39	1.86	0.16
158	SLU 34	8	199	2444	-6.26	1.85	0.16
158	SLU 35	8	210	2515	-6.62	1.89	0.16
158	SLU 36	8	209	2503	-6.56	1.89	0.16
158	SLU 37	8	208	2498	-6.53	1.87	0.16
158	SLU 38	8	206	2486	-6.47	1.87	0.16
158	SLU 39	9	208	2575	-6.52	1.93	0.17
158	SLU 40	9	206	2563	-6.46	1.93	0.16
158	SLU 41	9	213	2609	-6.69	1.95	0.17
158	SLU 42	9	211	2598	-6.63	1.95	0.17
158	SLU 43	8	172	2302	-5.4	1.72	0.15
158	SLU 44	7	169	2282	-5.3	1.71	0.14
158	SLU 45	8	180	2353	-5.65	1.75	0.15
158	SLU 46	8	178	2341	-5.59	1.75	0.15
158	SLU 47	8	174	2316	-5.47	1.74	0.15
158	SLU 48	8	186	2387	-5.82	1.78	0.15
158	SLU 49	8	184	2375	-5.76	1.78	0.15
158	SLU 50	8	183	2370	-5.74	1.76	0.15
158	SLU 51	8	181	2358	-5.68	1.76	0.15
158	SLU 52	9	194	2621	-6.06	1.96	0.17
158	SLU 53	9	205	2692	-6.41	2	0.17
158	SLU 54	9	203	2680	-6.35	2	0.17
158	SLU 55	9	199	2655	-6.23	1.98	0.17
158	SLU 56	9	210	2726	-6.58	2.02	0.17
158	SLU 57	9	208	2714	-6.52	2.02	0.17
158	SLU 58	9	207	2709	-6.5	2.01	0.17
158	SLU 59	9	205	2697	-6.44	2.01	0.17
158	SLU 60	9	207	2786	-6.48	2.07	0.18
158	SLU 61	9	205	2774	-6.42	2.07	0.18
158	SLU 62	9	212	2820	-6.65	2.09	0.18
158	SLU 63	9	211	2809	-6.59	2.09	0.18
158	SLU 64	8	204	2555	-6.41	1.92	0.16
158	SLU 65	8	201	2535	-6.31	1.92	0.16
158	SLU 66	9	212	2606	-6.67	1.96	0.17
158	SLU 67	9	210	2594	-6.61	1.96	0.17
158	SLU 68	9	206	2570	-6.48	1.94	0.16
158	SLU 69	9	217	2640	-6.84	1.98	0.17
158	SLU 70	9	215	2629	-6.78	1.98	0.17
158	SLU 71	9	215	2623	-6.75	1.97	0.17
158	SLU 72	9	213	2611	-6.69	1.97	0.17
158	SLU 73	10	225	2875	-7.07	2.17	0.18
158	SLU 74	10	236	2945	-7.43	2.21	0.19
158	SLU 75	10	235	2934	-7.37	2.2	0.19
158	SLU 76	10	231	2909	-7.24	2.19	0.19
158	SLU 77	10	242	2979	-7.59	2.23	0.19
158	SLU 78	10	240	2968	-7.53	2.23	0.19
158	SLU 79	10	239	2962	-7.51	2.21	0.19
158	SLU 80	10	237	2951	-7.45	2.21	0.19
158	SLU 81	10	239	3040	-7.5	2.27	0.19
158	SLU 82	10	237	3028	-7.44	2.27	0.19
158	SLU 83	10	244	3074	-7.67	2.3	0.2
158	SLU 84	10	242	3062	-7.61	2.29	0.2
158	SLE RA 1	6	150	1910	-4.71	1.43	0.12

Nodo	Cont.	Reazione a traslazione			Reazione a rotazione		
Ind.	N.br.	x	y	z	x	y	z
158	SLE RA 2	6	148	1897	-4.64	1.43	0.12
158	SLE RA 3	6	155	1944	-4.88	1.46	0.12
158	SLE RA 4	6	154	1936	-4.84	1.46	0.12
158	SLE RA 5	6	151	1919	-4.76	1.45	0.12
158	SLE RA 6	7	159	1967	-4.99	1.47	0.13
158	SLE RA 7	7	158	1959	-4.95	1.47	0.13
158	SLE RA 8	7	157	1955	-4.94	1.46	0.13
158	SLE RA 9	6	156	1947	-4.9	1.46	0.12
158	SLE RA 10	7	164	2123	-5.15	1.6	0.14
158	SLE RA 11	7	172	2170	-5.39	1.62	0.14
158	SLE RA 12	7	170	2162	-5.35	1.62	0.14
158	SLE RA 13	7	168	2145	-5.26	1.61	0.14
158	SLE RA 14	7	175	2193	-5.5	1.64	0.14
158	SLE RA 15	7	174	2185	-5.46	1.64	0.14
158	SLE RA 16	7	173	2181	-5.44	1.63	0.14
158	SLE RA 17	7	172	2173	-5.4	1.63	0.14
158	SLE RA 18	7	173	2233	-5.43	1.67	0.14
158	SLE RA 19	7	172	2225	-5.39	1.67	0.14
158	SLE RA 20	7	177	2256	-5.55	1.68	0.14
158	SLE RA 21	7	176	2248	-5.51	1.68	0.14
158	SLE FR 1	6	150	1910	-4.71	1.43	0.12
158	SLE FR 2	6	150	1907	-4.7	1.43	0.12
158	SLE FR 3	6	151	1919	-4.76	1.44	0.12
158	SLE FR 4	7	157	2004	-4.91	1.5	0.13
158	SLE FR 5	7	158	2016	-4.97	1.51	0.13
158	SLE FR 6	7	162	2071	-5.07	1.55	0.13
158	SLE QP 1	6	150	1910	-4.71	1.43	0.12
158	SLE QP 2	7	157	2007	-4.93	1.5	0.13
158	SLD 1	8	77	1867	-1.77	4.26	0.16
158	SLD 2	8	77	1867	-1.77	4.26	0.16
158	SLD 3	9	195	2075	-6.39	4.67	0.18
158	SLD 4	9	195	2075	-6.39	4.67	0.18
158	SLD 5	5	-47	1648	3.03	1.71	0.11
158	SLD 6	5	-47	1648	3.03	1.71	0.11
158	SLD 7	9	348	2344	-12.38	3.07	0.17
158	SLD 8	9	348	2344	-12.38	3.07	0.17
158	SLD 9	4	-34	1670	2.53	-0.07	0.08
158	SLD 10	4	-34	1670	2.53	-0.07	0.08
158	SLD 11	8	361	2365	-12.89	1.3	0.15
158	SLD 12	8	361	2365	-12.89	1.3	0.15
158	SLD 13	4	119	1938	-3.46	-1.66	0.08
158	SLD 14	4	119	1938	-3.46	-1.66	0.08
158	SLD 15	6	237	2147	-8.09	-1.25	0.1
158	SLD 16	6	237	2147	-8.09	-1.25	0.1
158	SLV 1	9	-33	1678	2.53	8.1	0.19
158	SLV 2	9	-33	1678	2.53	8.1	0.19
158	SLV 3	12	246	2165	-8.32	9.06	0.24
158	SLV 4	12	246	2165	-8.32	9.06	0.24
158	SLV 5	3	-322	1170	13.77	2.02	0.07
158	SLV 6	3	-322	1170	13.77	2.02	0.07
158	SLV 7	12	606	2792	-22.41	5.23	0.24
158	SLV 8	12	606	2792	-22.41	5.23	0.24
158	SLV 9	1	-292	1221	12.55	-2.22	0.02
158	SLV 10	1	-292	1221	12.55	-2.22	0.02
158	SLV 11	10	636	2843	-23.63	0.98	0.18
158	SLV 12	10	636	2843	-23.63	0.98	0.18
158	SLV 13	2	68	1848	-1.53	-6.06	0.02
158	SLV 14	2	68	1848	-1.53	-6.06	0.02
158	SLV 15	4	347	2335	-12.39	-5.09	0.07
158	SLV 16	4	347	2335	-12.39	-5.09	0.07
159	SLU 1	10	21	5097	-1.23	9.72	-0.01
159	SLU 2	11	127	5004	-5.69	8.78	-0.01
159	SLU 3	10	22	5255	-1.25	10.08	-0.01
159	SLU 4	11	85	5199	-3.93	9.52	-0.01
159	SLU 5	11	126	5109	-5.67	9.02	-0.01
159	SLU 6	10	22	5360	-1.23	10.31	-0.01
159	SLU 7	11	85	5304	-3.91	9.75	-0.01
159	SLU 8	10	21	5308	-1.2	10.18	-0.01
159	SLU 9	11	84	5252	-3.87	9.62	-0.01
159	SLU 10	12	131	5593	-5.93	10.24	-0.01
159	SLU 11	12	27	5845	-1.49	11.53	-0.01
159	SLU 12	12	90	5789	-4.16	10.98	-0.01
159	SLU 13	12	131	5699	-5.91	10.47	-0.01
159	SLU 14	12	26	5950	-1.47	11.76	-0.01
159	SLU 15	12	89	5894	-4.15	11.21	-0.01
159	SLU 16	12	26	5898	-1.44	11.64	-0.01
159	SLU 17	12	89	5842	-4.11	11.08	-0.01
159	SLU 18	12	28	5940	-1.57	11.8	-0.01
159	SLU 19	12	91	5884	-4.25	11.24	-0.01
159	SLU 20	12	28	6045	-1.55	12.03	-0.01
159	SLU 21	13	91	5989	-4.23	11.47	-0.01
159	SLU 22	11	26	5676	-1.45	11.12	-0.01
159	SLU 23	12	131	5582	-5.9	10.19	-0.01
159	SLU 24	12	26	5834	-1.46	11.48	-0.01
159	SLU 25	12	89	5777	-4.14	10.93	-0.01
159	SLU 26	12	131	5688	-5.89	10.42	-0.01
159	SLU 27	12	26	5939	-1.45	11.72	-0.01
159	SLU 28	12	89	5883	-4.12	11.16	-0.01
159	SLU 29	12	25	5887	-1.41	11.59	-0.01
159	SLU 30	12	88	5831	-4.08	11.03	-0.01
159	SLU 31	14	136	6172	-6.14	11.65	-0.01

Nodo	Cont.	Reazione a traslazione			Reazione a rotazione		
Ind.	N.br.	x	y	z	x	y	z
159	SLU 32	13	31	6423	-1.7	12.94	-0.01
159	SLU 33	14	94	6367	-4.38	12.38	-0.01
159	SLU 34	14	135	6278	-6.12	11.88	-0.01
159	SLU 35	13	30	6529	-1.68	13.17	-0.01
159	SLU 36	14	94	6473	-4.36	12.61	-0.01
159	SLU 37	13	30	6477	-1.65	13.04	-0.01
159	SLU 38	14	93	6421	-4.32	12.49	-0.01
159	SLU 39	13	32	6519	-1.79	13.21	-0.01
159	SLU 40	14	95	6462	-4.46	12.65	-0.01
159	SLU 41	14	32	6624	-1.77	13.44	-0.01
159	SLU 42	14	95	6568	-4.44	12.88	-0.01
159	SLU 43	12	26	6428	-1.53	12.15	-0.01
159	SLU 44	13	132	6334	-5.99	11.22	-0.01
159	SLU 45	13	27	6586	-1.55	12.51	-0.01
159	SLU 46	13	90	6529	-4.22	11.95	-0.01
159	SLU 47	13	131	6440	-5.97	11.45	-0.01
159	SLU 48	13	27	6691	-1.53	12.74	-0.01
159	SLU 49	13	90	6635	-4.21	12.18	-0.01
159	SLU 50	13	26	6639	-1.5	12.61	-0.01
159	SLU 51	13	89	6583	-4.17	12.05	-0.01
159	SLU 52	15	136	6924	-6.23	12.67	-0.01
159	SLU 53	14	31	7175	-1.79	13.97	-0.01
159	SLU 54	15	95	7119	-4.46	13.41	-0.01
159	SLU 55	15	136	7030	-6.21	12.91	-0.01
159	SLU 56	14	31	7281	-1.77	14.2	-0.01
159	SLU 57	15	94	7225	-4.44	13.64	-0.01
159	SLU 58	14	31	7229	-1.73	14.07	-0.01
159	SLU 59	15	94	7173	-4.41	13.51	-0.01
159	SLU 60	14	33	7271	-1.87	14.23	-0.01
159	SLU 61	15	96	7214	-4.54	13.67	-0.01
159	SLU 62	15	33	7376	-1.85	14.46	-0.01
159	SLU 63	15	96	7320	-4.53	13.9	-0.01
159	SLU 64	14	31	7006	-1.74	13.56	-0.01
159	SLU 65	14	136	6913	-6.2	12.62	-0.01
159	SLU 66	14	31	7164	-1.76	13.92	-0.01
159	SLU 67	15	94	7108	-4.44	13.36	-0.01
159	SLU 68	15	136	7018	-6.18	12.86	-0.01
159	SLU 69	14	31	7270	-1.74	14.15	-0.01
159	SLU 70	15	94	7214	-4.42	13.59	-0.01
159	SLU 71	14	30	7218	-1.71	14.02	-0.01
159	SLU 72	15	93	7161	-4.38	13.46	-0.01
159	SLU 73	16	141	7503	-6.44	14.08	-0.01
159	SLU 74	16	36	7754	-2	15.37	-0.01
159	SLU 75	16	99	7698	-4.67	14.82	-0.01
159	SLU 76	16	140	7608	-6.42	14.31	-0.01
159	SLU 77	16	35	7860	-1.98	15.6	-0.01
159	SLU 78	16	99	7804	-4.66	15.05	-0.01
159	SLU 79	16	35	7807	-1.95	15.48	-0.01
159	SLU 80	16	98	7751	-4.62	14.92	-0.01
159	SLU 81	16	37	7849	-2.08	15.64	-0.01
159	SLU 82	16	100	7793	-4.76	15.08	-0.01
159	SLU 83	16	37	7955	-2.06	15.87	-0.01
159	SLU 84	17	100	7899	-4.74	15.31	-0.01
159	SLE RA 1	10	23	5262	-1.29	10.12	-0.01
159	SLE RA 2	11	93	5200	-4.27	9.5	-0.01
159	SLE RA 3	10	23	5368	-1.31	10.36	-0.01
159	SLE RA 4	11	65	5330	-3.09	9.99	-0.01
159	SLE RA 5	11	93	5270	-4.25	9.65	-0.01
159	SLE RA 6	11	23	5438	-1.29	10.51	-0.01
159	SLE RA 7	11	65	5401	-3.08	10.14	-0.01
159	SLE RA 8	11	22	5403	-1.27	10.43	-0.01
159	SLE RA 9	11	64	5366	-3.05	10.05	-0.01
159	SLE RA 10	12	96	5593	-4.42	10.47	-0.01
159	SLE RA 11	11	26	5761	-1.46	11.33	-0.01
159	SLE RA 12	12	68	5723	-3.25	10.96	-0.01
159	SLE RA 13	12	96	5664	-4.41	10.62	-0.01
159	SLE RA 14	12	26	5831	-1.45	11.48	-0.01
159	SLE RA 15	12	68	5794	-3.24	11.11	-0.01
159	SLE RA 16	12	25	5796	-1.43	11.4	-0.01
159	SLE RA 17	12	67	5759	-3.21	11.03	-0.01
159	SLE RA 18	12	27	5824	-1.52	11.51	-0.01
159	SLE RA 19	12	69	5787	-3.3	11.13	-0.01
159	SLE RA 20	12	27	5895	-1.51	11.66	-0.01
159	SLE RA 21	12	69	5857	-3.29	11.29	-0.01
159	SLE FR 1	10	23	5262	-1.29	10.12	-0.01
159	SLE FR 2	10	37	5250	-1.89	9.99	-0.01
159	SLE FR 3	10	23	5291	-1.29	10.18	-0.01
159	SLE FR 4	11	38	5418	-1.96	10.41	-0.01
159	SLE FR 5	11	24	5459	-1.36	10.6	-0.01
159	SLE FR 6	11	25	5543	-1.41	10.81	-0.01
159	SLE QP 1	10	23	5262	-1.29	10.12	-0.01
159	SLE QP 2	11	24	5431	-1.36	10.53	-0.01
159	SLD 1	21	347	6797	-15.08	18.01	0
159	SLD 2	21	347	6797	-15.08	18.01	0
159	SLD 3	18	-204	6684	8.41	16.26	0
159	SLD 4	18	-204	6684	8.41	16.26	0
159	SLD 5	18	958	6012	-41.09	15.44	0
159	SLD 6	18	958	6012	-41.09	15.44	0
159	SLD 7	9	-881	5635	37.18	9.59	-0.01
159	SLD 8	9	-881	5635	37.18	9.59	-0.01
159	SLD 9	13	929	5227	-39.91	11.47	-0.01

Nodo	Cont.	Reazione a traslazione			Reazione a rotazione		
Ind.	N.br.	x	y	z	x	y	z
159	SLD 10	13	929	5227	-39.91	11.47	-0.01
159	SLD 11	3	-910	4850	38.37	5.63	-0.01
159	SLD 12	3	-910	4850	38.37	5.63	-0.01
159	SLD 13	3	252	4178	-11.13	4.81	-0.02
159	SLD 14	3	252	4178	-11.13	4.81	-0.02
159	SLD 15	0	-299	4065	12.35	3.06	-0.02
159	SLD 16	0	-299	4065	12.35	3.06	-0.02
159	SLV 1	35	786	8605	-33.69	28.19	0.02
159	SLV 2	35	786	8605	-33.69	28.19	0.02
159	SLV 3	28	-501	8335	21.07	23.75	0.01
159	SLV 4	28	-501	8335	21.07	23.75	0.01
159	SLV 5	29	2204	6793	-94.12	22.57	0.01
159	SLV 6	29	2204	6793	-94.12	22.57	0.01
159	SLV 7	5	-2085	5892	88.43	7.76	-0.01
159	SLV 8	5	-2085	5892	88.43	7.76	-0.01
159	SLV 9	16	2132	4969	-91.15	13.31	-0.01
159	SLV 10	16	2132	4969	-91.15	13.31	-0.01
159	SLV 11	-7	-2156	4069	91.4	-1.5	-0.02
159	SLV 12	-7	-2156	4069	91.4	-1.5	-0.02
159	SLV 13	-7	548	2527	-23.8	-2.68	-0.03
159	SLV 14	-7	548	2527	-23.8	-2.68	-0.03
159	SLV 15	-14	-738	2257	30.97	-7.12	-0.03
159	SLV 16	-14	-738	2257	30.97	-7.12	-0.03
160	SLU 1	2	-447	4076	20.3	0.56	-0.01
160	SLU 2	2	-125	3723	4.59	0.57	-0.01
160	SLU 3	2	-460	4214	20.93	0.59	-0.01
160	SLU 4	2	-267	4002	11.5	0.59	-0.01
160	SLU 5	2	-133	3810	4.96	0.58	-0.01
160	SLU 6	2	-468	4300	21.3	0.6	-0.01
160	SLU 7	2	-274	4089	11.87	0.6	-0.01
160	SLU 8	2	-463	4249	21.04	0.59	-0.01
160	SLU 9	2	-269	4038	11.62	0.59	-0.01
160	SLU 10	2	-182	4477	7.55	0.68	-0.01
160	SLU 11	3	-517	4967	23.89	0.7	-0.01
160	SLU 12	2	-324	4755	14.46	0.71	-0.01
160	SLU 13	2	-190	4563	7.92	0.7	-0.01
160	SLU 14	3	-525	5054	24.26	0.71	-0.01
160	SLU 15	2	-332	4842	14.83	0.72	-0.01
160	SLU 16	3	-520	5003	24	0.7	-0.01
160	SLU 17	2	-327	4791	14.58	0.71	-0.01
160	SLU 18	3	-529	5152	24.53	0.73	-0.01
160	SLU 19	2	-336	4941	15.11	0.73	-0.01
160	SLU 20	3	-537	5239	24.9	0.74	-0.01
160	SLU 21	3	-343	5027	15.48	0.75	-0.01
160	SLU 22	2	-504	4761	23.19	0.67	-0.01
160	SLU 23	2	-182	4408	7.48	0.67	-0.01
160	SLU 24	3	-517	4899	23.81	0.69	-0.01
160	SLU 25	2	-324	4687	14.39	0.69	-0.01
160	SLU 26	2	-190	4495	7.85	0.68	-0.01
160	SLU 27	3	-525	4985	24.18	0.7	-0.01
160	SLU 28	2	-331	4774	14.76	0.7	-0.01
160	SLU 29	3	-520	4934	23.93	0.69	-0.01
160	SLU 30	2	-326	4723	14.5	0.69	-0.01
160	SLU 31	3	-239	5162	10.44	0.79	-0.01
160	SLU 32	3	-574	5652	26.77	0.81	-0.01
160	SLU 33	3	-381	5440	17.34	0.81	-0.01
160	SLU 34	3	-247	5248	10.81	0.8	-0.01
160	SLU 35	3	-582	5739	27.14	0.82	-0.01
160	SLU 36	3	-389	5527	17.71	0.82	-0.01
160	SLU 37	3	-577	5688	26.89	0.81	-0.01
160	SLU 38	3	-384	5476	17.46	0.81	-0.01
160	SLU 39	3	-586	5837	27.41	0.84	-0.01
160	SLU 40	3	-393	5626	17.99	0.84	-0.01
160	SLU 41	3	-594	5924	27.78	0.85	-0.01
160	SLU 42	3	-400	5712	18.36	0.85	-0.01
160	SLU 43	3	-562	5064	25.4	0.7	-0.01
160	SLU 44	2	-240	4711	9.7	0.7	-0.01
160	SLU 45	3	-575	5201	26.03	0.72	-0.01
160	SLU 46	2	-381	4990	16.6	0.72	-0.01
160	SLU 47	2	-248	4798	10.07	0.71	-0.01
160	SLU 48	3	-582	5288	26.4	0.73	-0.01
160	SLU 49	3	-389	5077	16.97	0.73	-0.01
160	SLU 50	3	-577	5237	26.14	0.72	-0.01
160	SLU 51	2	-384	5026	16.72	0.72	-0.01
160	SLU 52	3	-297	5465	12.66	0.82	-0.01
160	SLU 53	3	-632	5955	28.99	0.84	-0.01
160	SLU 54	3	-438	5743	19.56	0.84	-0.01
160	SLU 55	3	-305	5551	13.03	0.83	-0.01
160	SLU 56	3	-639	6041	29.36	0.85	-0.01
160	SLU 57	3	-446	5830	19.93	0.85	-0.01
160	SLU 58	3	-634	5991	29.1	0.84	-0.01
160	SLU 59	3	-441	5779	19.68	0.84	-0.01
160	SLU 60	3	-643	6140	29.63	0.87	-0.01
160	SLU 61	3	-450	5928	20.21	0.87	-0.01
160	SLU 62	3	-651	6227	30	0.88	-0.01
160	SLU 63	3	-458	6015	20.58	0.88	-0.01
160	SLU 64	3	-619	5749	28.29	0.8	-0.01
160	SLU 65	3	-297	5396	12.58	0.8	-0.01
160	SLU 66	3	-632	5886	28.91	0.82	-0.01
160	SLU 67	3	-438	5675	19.49	0.83	-0.01
160	SLU 68	3	-305	5483	12.95	0.82	-0.01

Nodo	Cont.	Reazione a traslazione			Reazione a rotazione		
Ind.	N.br.	x	y	z	x	y	z
160	SLU 69	3	-639	5973	29.28	0.84	-0.01
160	SLU 70	3	-446	5762	19.86	0.84	-0.01
160	SLU 71	3	-634	5922	29.03	0.82	-0.01
160	SLU 72	3	-441	5711	19.6	0.83	-0.01
160	SLU 73	3	-354	6150	15.54	0.92	-0.01
160	SLU 74	3	-689	6640	31.87	0.94	-0.01
160	SLU 75	3	-495	6428	22.45	0.94	-0.01
160	SLU 76	3	-362	6236	15.91	0.93	-0.01
160	SLU 77	4	-696	6726	32.24	0.95	-0.01
160	SLU 78	3	-503	6515	22.82	0.95	-0.01
160	SLU 79	3	-691	6676	31.99	0.94	-0.01
160	SLU 80	3	-498	6464	22.56	0.94	-0.01
160	SLU 81	4	-700	6825	32.52	0.97	-0.01
160	SLU 82	3	-507	6614	23.09	0.97	-0.01
160	SLU 83	4	-708	6912	32.89	0.98	-0.01
160	SLU 84	3	-515	6700	23.46	0.98	-0.01
160	SLE RA 1	2	-464	4272	21.13	0.59	-0.01
160	SLE RA 2	2	-249	4037	10.65	0.6	-0.01
160	SLE RA 3	2	-472	4363	21.54	0.61	-0.01
160	SLE RA 4	2	-343	4222	15.26	0.61	-0.01
160	SLE RA 5	2	-254	4094	10.9	0.6	-0.01
160	SLE RA 6	2	-477	4421	21.79	0.62	-0.01
160	SLE RA 7	2	-348	4280	15.51	0.62	-0.01
160	SLE RA 8	2	-474	4387	21.62	0.61	-0.01
160	SLE RA 9	2	-345	4246	15.34	0.61	-0.01
160	SLE RA 10	2	-287	4539	12.63	0.67	-0.01
160	SLE RA 11	3	-510	4866	23.52	0.69	-0.01
160	SLE RA 12	2	-381	4725	17.23	0.69	-0.01
160	SLE RA 13	2	-292	4597	12.87	0.68	-0.01
160	SLE RA 14	3	-515	4923	23.76	0.69	-0.01
160	SLE RA 15	2	-386	4782	17.48	0.7	-0.01
160	SLE RA 16	3	-512	4889	23.59	0.69	-0.01
160	SLE RA 17	2	-383	4748	17.31	0.69	-0.01
160	SLE RA 18	3	-518	4989	23.95	0.71	-0.01
160	SLE RA 19	2	-389	4848	17.66	0.71	-0.01
160	SLE RA 20	3	-523	5047	24.19	0.71	-0.01
160	SLE RA 21	2	-394	4906	17.91	0.71	-0.01
160	SLE FR 1	2	-464	4272	21.13	0.59	-0.01
160	SLE FR 2	2	-421	4225	19.03	0.59	-0.01
160	SLE FR 3	2	-466	4295	21.23	0.6	-0.01
160	SLE FR 4	2	-437	4440	19.88	0.63	-0.01
160	SLE FR 5	2	-482	4510	22.07	0.63	-0.01
160	SLE FR 6	2	-491	4630	22.54	0.65	-0.01
160	SLE QP 1	2	-464	4272	21.13	0.59	-0.01
160	SLE QP 2	2	-480	4487	21.97	0.63	-0.01
160	SLD 1	8	92	5163	-3.49	3.11	-0.01
160	SLD 2	8	92	5163	-3.49	3.11	-0.01
160	SLD 3	2	-341	5728	18.25	0.99	-0.02
160	SLD 4	2	-341	5728	18.25	0.99	-0.02
160	SLD 5	12	347	3833	-18.63	4.58	0
160	SLD 6	12	347	3833	-18.63	4.58	0
160	SLD 7	-5	-1094	5716	53.82	-2.47	-0.02
160	SLD 8	-5	-1094	5716	53.82	-2.47	-0.02
160	SLD 9	10	134	3258	-9.88	3.72	0
160	SLD 10	10	134	3258	-9.88	3.72	0
160	SLD 11	-7	-1307	5140	62.58	-3.32	-0.01
160	SLD 12	-7	-1307	5140	62.58	-3.32	-0.01
160	SLD 13	2	-619	3246	25.69	0.26	0
160	SLD 14	2	-619	3246	25.69	0.26	0
160	SLD 15	-3	-1051	3811	47.43	-1.85	0
160	SLD 16	-3	-1051	3811	47.43	-1.85	0
160	SLV 1	15	860	6006	-38.11	6.73	-0.02
160	SLV 2	15	860	6006	-38.11	6.73	-0.02
160	SLV 3	2	-155	7337	12.89	1.31	-0.04
160	SLV 4	2	-155	7337	12.89	1.31	-0.04
160	SLV 5	26	1461	2924	-73.41	10.68	0.01
160	SLV 6	26	1461	2924	-73.41	10.68	0.01
160	SLV 7	-18	-1921	7361	96.6	-7.39	-0.04
160	SLV 8	-18	-1921	7361	96.6	-7.39	-0.04
160	SLV 9	22	961	1613	-52.66	8.64	0.02
160	SLV 10	22	961	1613	-52.66	8.64	0.02
160	SLV 11	-22	-2421	6050	117.35	-9.42	-0.02
160	SLV 12	-22	-2421	6050	117.35	-9.42	-0.02
160	SLV 13	2	-805	1636	31.06	-0.05	0.02
160	SLV 14	2	-805	1636	31.06	-0.05	0.02
160	SLV 15	-11	-1820	2968	82.06	-5.47	0.01
160	SLV 16	-11	-1820	2968	82.06	-5.47	0.01
161	SLU 1	-1	-473	5251	26.63	-0.2	0
161	SLU 2	-1	-225	4830	13.87	-0.38	0.01
161	SLU 3	-1	-487	5428	27.43	-0.22	0
161	SLU 4	-1	-337	5175	19.77	-0.33	0
161	SLU 5	-1	-233	4943	14.36	-0.39	0.01
161	SLU 6	-1	-495	5541	27.92	-0.24	0
161	SLU 7	-1	-345	5289	20.26	-0.34	0
161	SLU 8	-1	-489	5478	27.61	-0.23	0
161	SLU 9	-1	-340	5225	19.95	-0.34	0
161	SLU 10	-1	-283	5779	17.58	-0.43	0.01
161	SLU 11	-1	-545	6377	31.14	-0.27	0
161	SLU 12	-1	-396	6124	23.49	-0.38	0.01
161	SLU 13	-1	-291	5892	18.07	-0.44	0.01
161	SLU 14	-1	-553	6490	31.63	-0.29	0

Nodo	Cont.	Reazione a traslazione			Reazione a rotazione		
Ind.	N.br.	x	y	z	x	y	z
161	SLU 15	-1	-404	6237	23.98	-0.39	0.01
161	SLU 16	-1	-548	6427	31.32	-0.28	0
161	SLU 17	-1	-399	6174	23.66	-0.39	0.01
161	SLU 18	-1	-557	6607	31.93	-0.27	0
161	SLU 19	-1	-408	6354	24.28	-0.38	0.01
161	SLU 20	-1	-565	6720	32.42	-0.29	0
161	SLU 21	-1	-416	6467	24.77	-0.39	0.01
161	SLU 22	-1	-532	6125	30.27	-0.25	0
161	SLU 23	-1	-284	5704	17.51	-0.42	0.01
161	SLU 24	-1	-545	6302	31.07	-0.27	0
161	SLU 25	-1	-396	6049	23.42	-0.37	0
161	SLU 26	-1	-291	5817	18	-0.44	0.01
161	SLU 27	-1	-553	6415	31.56	-0.28	0
161	SLU 28	-1	-404	6162	23.91	-0.39	0.01
161	SLU 29	-1	-548	6352	31.25	-0.28	0
161	SLU 30	-1	-399	6099	23.59	-0.39	0.01
161	SLU 31	-1	-342	6653	21.23	-0.47	0.01
161	SLU 32	-1	-604	7250	34.78	-0.32	0
161	SLU 33	-1	-455	6998	27.13	-0.42	0.01
161	SLU 34	-1	-350	6766	21.71	-0.49	0.01
161	SLU 35	-1	-612	7364	35.27	-0.33	0
161	SLU 36	-1	-463	7111	27.62	-0.44	0.01
161	SLU 37	-1	-607	7301	34.96	-0.33	0
161	SLU 38	-1	-457	7048	27.31	-0.43	0.01
161	SLU 39	-1	-616	7480	35.57	-0.32	0
161	SLU 40	-1	-467	7228	27.92	-0.42	0.01
161	SLU 41	-1	-624	7594	36.06	-0.33	0
161	SLU 42	-1	-474	7341	28.41	-0.44	0.01
161	SLU 43	-1	-595	6527	33.37	-0.25	0
161	SLU 44	-1	-347	6106	20.61	-0.42	0.01
161	SLU 45	-1	-609	6704	34.17	-0.27	0
161	SLU 46	-1	-459	6451	26.51	-0.37	0.01
161	SLU 47	-1	-355	6219	21.1	-0.44	0.01
161	SLU 48	-1	-616	6817	34.66	-0.28	0
161	SLU 49	-1	-467	6564	27	-0.39	0.01
161	SLU 50	-1	-611	6754	34.35	-0.28	0
161	SLU 51	-1	-462	6501	26.69	-0.38	0.01
161	SLU 52	-1	-405	7054	24.32	-0.47	0.01
161	SLU 53	-1	-667	7652	37.88	-0.32	0
161	SLU 54	-1	-518	7400	30.23	-0.42	0.01
161	SLU 55	-1	-413	7168	24.81	-0.49	0.01
161	SLU 56	-1	-675	7766	38.37	-0.33	0
161	SLU 57	-1	-526	7513	30.72	-0.44	0.01
161	SLU 58	-1	-670	7703	38.06	-0.33	0
161	SLU 59	-1	-520	7450	30.4	-0.43	0.01
161	SLU 60	-1	-679	7882	38.67	-0.32	0
161	SLU 61	-1	-530	7630	31.02	-0.42	0.01
161	SLU 62	-1	-687	7996	39.16	-0.33	0
161	SLU 63	-1	-538	7743	31.51	-0.44	0.01
161	SLU 64	-1	-654	7401	37.01	-0.29	0
161	SLU 65	-1	-405	6980	24.25	-0.47	0.01
161	SLU 66	-1	-667	7578	37.81	-0.31	0
161	SLU 67	-1	-518	7325	30.16	-0.42	0.01
161	SLU 68	-1	-413	7093	24.74	-0.48	0.01
161	SLU 69	-1	-675	7691	38.3	-0.33	0
161	SLU 70	-1	-526	7438	30.65	-0.43	0.01
161	SLU 71	-1	-670	7628	37.99	-0.33	0
161	SLU 72	-1	-521	7375	30.33	-0.43	0.01
161	SLU 73	-1	-464	7928	27.97	-0.52	0.01
161	SLU 74	-1	-726	8526	41.52	-0.36	0.01
161	SLU 75	-1	-577	8273	33.87	-0.47	0.01
161	SLU 76	-1	-472	8042	28.45	-0.53	0.01
161	SLU 77	-1	-734	8640	42.01	-0.38	0.01
161	SLU 78	-1	-585	8387	34.36	-0.48	0.01
161	SLU 79	-1	-728	8576	41.7	-0.37	0.01
161	SLU 80	-1	-579	8324	34.05	-0.48	0.01
161	SLU 81	-1	-738	8756	42.31	-0.36	0.01
161	SLU 82	-1	-588	8503	34.66	-0.47	0.01
161	SLU 83	-1	-746	8870	42.8	-0.38	0.01
161	SLU 84	-1	-596	8617	35.15	-0.48	0.01
161	SLE RA 1	-1	-490	5501	27.67	-0.22	0
161	SLE RA 2	-1	-324	5220	19.16	-0.33	0
161	SLE RA 3	-1	-499	5619	28.2	-0.23	0
161	SLE RA 4	-1	-400	5450	23.1	-0.3	0
161	SLE RA 5	-1	-330	5296	19.49	-0.34	0
161	SLE RA 6	-1	-504	5694	28.53	-0.24	0
161	SLE RA 7	-1	-405	5526	23.43	-0.31	0
161	SLE RA 8	-1	-501	5652	28.32	-0.24	0
161	SLE RA 9	-1	-401	5484	23.22	-0.31	0
161	SLE RA 10	-1	-363	5853	21.64	-0.36	0
161	SLE RA 11	-1	-538	6251	30.68	-0.26	0
161	SLE RA 12	-1	-439	6083	25.57	-0.33	0
161	SLE RA 13	-1	-369	5928	21.96	-0.38	0.01
161	SLE RA 14	-1	-543	6327	31	-0.27	0
161	SLE RA 15	-1	-444	6158	25.9	-0.34	0
161	SLE RA 16	-1	-540	6285	30.8	-0.27	0
161	SLE RA 17	-1	-440	6116	25.69	-0.34	0
161	SLE RA 18	-1	-546	6404	31.2	-0.26	0
161	SLE RA 19	-1	-446	6236	26.1	-0.33	0
161	SLE RA 20	-1	-551	6480	31.53	-0.27	0
161	SLE RA 21	-1	-452	6312	26.43	-0.34	0

Nodo	Cont.	Reazione a traslazione			Reazione a rotazione		
Ind.	N.br.	x	y	z	x	y	z
161	SLE FR 1	-1	-490	5501	27.67	-0.22	0
161	SLE FR 2	-1	-457	5445	25.97	-0.24	0
161	SLE FR 3	-1	-492	5531	27.8	-0.22	0
161	SLE FR 4	-1	-474	5716	27.03	-0.25	0
161	SLE FR 5	-1	-509	5802	28.86	-0.23	0
161	SLE FR 6	-1	-518	5953	29.44	-0.24	0
161	SLE QP 1	-1	-490	5501	27.67	-0.22	0
161	SLE QP 2	-1	-507	5772	28.73	-0.23	0
161	SLD 1	-1	-505	5160	10.23	0.45	0
161	SLD 2	-1	-505	5160	10.23	0.45	0
161	SLD 3	4	-885	5730	29.61	2.04	-0.01
161	SLD 4	4	-885	5730	29.61	2.04	-0.01
161	SLD 5	-9	70	4724	-6.2	-2.44	0.02
161	SLD 6	-9	70	4724	-6.2	-2.44	0.02
161	SLD 7	8	-1197	6624	58.37	2.86	-0.02
161	SLD 8	8	-1197	6624	58.37	2.86	-0.02
161	SLD 9	-10	183	4920	-0.92	-3.32	0.02
161	SLD 10	-10	183	4920	-0.92	-3.32	0.02
161	SLD 11	7	-1084	6820	63.66	1.98	-0.01
161	SLD 12	7	-1084	6820	63.66	1.98	-0.01
161	SLD 13	-6	-129	5813	27.85	-2.5	0.02
161	SLD 14	-6	-129	5813	27.85	-2.5	0.02
161	SLD 15	0	-509	6384	47.22	-0.91	0.01
161	SLD 16	0	-509	6384	47.22	-0.91	0.01
161	SLV 1	-2	-511	4321	-15.3	1.35	-0.01
161	SLV 2	-2	-511	4321	-15.3	1.35	-0.01
161	SLV 3	11	-1404	5670	30.26	5.26	-0.04
161	SLV 4	11	-1404	5670	30.26	5.26	-0.04
161	SLV 5	-20	847	3292	-53.58	-5.69	0.04
161	SLV 6	-20	847	3292	-53.58	-5.69	0.04
161	SLV 7	22	-2131	7786	98.29	7.34	-0.05
161	SLV 8	22	-2131	7786	98.29	7.34	-0.05
161	SLV 9	-24	1117	3758	-40.83	-7.8	0.05
161	SLV 10	-24	1117	3758	-40.83	-7.8	0.05
161	SLV 11	19	-1861	8252	111.04	5.23	-0.03
161	SLV 12	19	-1861	8252	111.04	5.23	-0.03
161	SLV 13	-12	390	5874	27.2	-5.72	0.05
161	SLV 14	-12	390	5874	27.2	-5.72	0.05
161	SLV 15	0	-503	7223	72.76	-1.81	0.02
161	SLV 16	0	-503	7223	72.76	-1.81	0.02
162	SLU 1	-14	1053	5055	-40.63	-4.77	0.04
162	SLU 2	-13	1098	4993	-42.64	-4.15	0.04
162	SLU 3	-14	1096	5230	-42.25	-4.97	0.04
162	SLU 4	-14	1123	5192	-43.45	-4.6	0.04
162	SLU 5	-13	1127	5114	-43.74	-4.29	0.04
162	SLU 6	-15	1125	5350	-43.35	-5.12	0.04
162	SLU 7	-14	1152	5313	-44.55	-4.75	0.04
162	SLU 8	-15	1112	5296	-42.84	-5.06	0.04
162	SLU 9	-14	1138	5259	-44.04	-4.69	0.04
162	SLU 10	-15	1262	5688	-48.79	-5.04	0.05
162	SLU 11	-17	1260	5925	-48.4	-5.86	0.05
162	SLU 12	-16	1286	5887	-49.6	-5.49	0.05
162	SLU 13	-16	1291	5809	-49.89	-5.18	0.05
162	SLU 14	-17	1289	6045	-49.5	-6.01	0.05
162	SLU 15	-17	1316	6008	-50.7	-5.64	0.05
162	SLU 16	-17	1275	5991	-48.99	-5.94	0.05
162	SLU 17	-17	1302	5954	-50.19	-5.57	0.05
162	SLU 18	-18	1287	6048	-49.42	-6.03	0.05
162	SLU 19	-17	1314	6011	-50.63	-5.66	0.05
162	SLU 20	-18	1316	6169	-50.52	-6.18	0.05
162	SLU 21	-17	1343	6131	-51.73	-5.81	0.05
162	SLU 22	-16	1212	5720	-46.6	-5.59	0.05
162	SLU 23	-15	1256	5658	-48.61	-4.98	0.05
162	SLU 24	-17	1254	5894	-48.22	-5.8	0.05
162	SLU 25	-16	1281	5857	-49.42	-5.43	0.05
162	SLU 26	-16	1285	5778	-49.71	-5.12	0.05
162	SLU 27	-17	1283	6015	-49.32	-5.95	0.05
162	SLU 28	-17	1310	5977	-50.52	-5.58	0.05
162	SLU 29	-17	1270	5961	-48.8	-5.89	0.05
162	SLU 30	-16	1297	5923	-50.01	-5.51	0.05
162	SLU 31	-18	1420	6353	-54.76	-5.87	0.06
162	SLU 32	-19	1418	6589	-54.37	-6.69	0.06
162	SLU 33	-19	1445	6552	-55.57	-6.32	0.06
162	SLU 34	-18	1449	6473	-55.86	-6.01	0.06
162	SLU 35	-20	1447	6710	-55.47	-6.83	0.06
162	SLU 36	-19	1474	6672	-56.67	-6.46	0.06
162	SLU 37	-20	1434	6656	-54.95	-6.77	0.06
162	SLU 38	-19	1460	6618	-56.16	-6.4	0.06
162	SLU 39	-20	1446	6713	-55.39	-6.86	0.06
162	SLU 40	-19	1472	6676	-56.59	-6.49	0.06
162	SLU 41	-20	1475	6833	-56.49	-7.01	0.06
162	SLU 42	-20	1501	6796	-57.69	-6.64	0.06
162	SLU 43	-17	1315	6344	-50.78	-5.91	0.05
162	SLU 44	-16	1360	6282	-52.79	-5.29	0.05
162	SLU 45	-18	1358	6518	-52.39	-6.12	0.05
162	SLU 46	-17	1385	6481	-53.6	-5.75	0.05
162	SLU 47	-17	1389	6402	-53.89	-5.44	0.05
162	SLU 48	-18	1387	6639	-53.49	-6.26	0.05
162	SLU 49	-18	1414	6601	-54.7	-5.89	0.05
162	SLU 50	-18	1374	6585	-52.98	-6.2	0.05
162	SLU 51	-17	1400	6547	-54.18	-5.83	0.05

Nodo	Cont.	Reazione a traslazione			Reazione a rotazione		
Ind.	N.br.	x	y	z	x	y	z
162	SLU 52	-19	1524	6977	-58.94	-6.18	0.06
162	SLU 53	-20	1521	7213	-58.54	-7.01	0.06
162	SLU 54	-20	1548	7176	-59.75	-6.64	0.06
162	SLU 55	-19	1553	7097	-60.04	-6.33	0.06
162	SLU 56	-21	1551	7334	-59.64	-7.15	0.06
162	SLU 57	-20	1577	7296	-60.85	-6.78	0.06
162	SLU 58	-21	1537	7280	-59.13	-7.09	0.06
162	SLU 59	-20	1564	7242	-60.34	-6.72	0.06
162	SLU 60	-21	1549	7337	-59.57	-7.18	0.06
162	SLU 61	-20	1576	7300	-60.77	-6.81	0.06
162	SLU 62	-21	1578	7457	-60.67	-7.32	0.06
162	SLU 63	-21	1605	7420	-61.87	-6.95	0.06
162	SLU 64	-20	1473	7009	-56.75	-6.74	0.06
162	SLU 65	-18	1518	6947	-58.75	-6.12	0.06
162	SLU 66	-20	1516	7183	-58.36	-6.95	0.06
162	SLU 67	-20	1543	7146	-59.56	-6.58	0.06
162	SLU 68	-19	1547	7067	-59.85	-6.27	0.06
162	SLU 69	-21	1545	7303	-59.46	-7.09	0.06
162	SLU 70	-20	1572	7266	-60.67	-6.72	0.06
162	SLU 71	-20	1532	7249	-58.95	-7.03	0.06
162	SLU 72	-20	1558	7212	-60.15	-6.66	0.06
162	SLU 73	-21	1682	7642	-64.9	-7.01	0.06
162	SLU 74	-23	1680	7878	-64.51	-7.83	0.07
162	SLU 75	-22	1706	7841	-65.71	-7.46	0.07
162	SLU 76	-21	1711	7762	-66	-7.16	0.07
162	SLU 77	-23	1709	7998	-65.61	-7.98	0.07
162	SLU 78	-23	1736	7961	-66.82	-7.61	0.07
162	SLU 79	-23	1695	7944	-65.1	-7.92	0.07
162	SLU 80	-22	1722	7907	-66.3	-7.55	0.07
162	SLU 81	-23	1707	8002	-65.53	-8.01	0.07
162	SLU 82	-23	1734	7965	-66.74	-7.64	0.07
162	SLU 83	-24	1736	8122	-66.63	-8.15	0.07
162	SLU 84	-23	1763	8085	-67.84	-7.78	0.07
162	SLE RA 1	-15	1099	5245	-42.34	-5	0.04
162	SLE RA 2	-14	1128	5204	-43.68	-4.59	0.04
162	SLE RA 3	-15	1127	5361	-43.42	-5.14	0.04
162	SLE RA 4	-15	1145	5337	-44.22	-4.89	0.04
162	SLE RA 5	-14	1148	5284	-44.41	-4.69	0.04
162	SLE RA 6	-15	1146	5442	-44.15	-5.24	0.04
162	SLE RA 7	-15	1164	5417	-44.95	-4.99	0.04
162	SLE RA 8	-15	1138	5406	-43.81	-5.2	0.04
162	SLE RA 9	-15	1155	5381	-44.61	-4.95	0.04
162	SLE RA 10	-16	1238	5667	-47.78	-5.18	0.05
162	SLE RA 11	-17	1236	5825	-47.52	-5.73	0.05
162	SLE RA 12	-16	1254	5800	-48.32	-5.49	0.05
162	SLE RA 13	-16	1257	5748	-48.51	-5.28	0.05
162	SLE RA 14	-17	1256	5905	-48.25	-5.83	0.05
162	SLE RA 15	-16	1273	5880	-49.05	-5.58	0.05
162	SLE RA 16	-17	1247	5869	-47.91	-5.79	0.05
162	SLE RA 17	-16	1264	5844	-48.71	-5.54	0.05
162	SLE RA 18	-17	1255	5907	-48.2	-5.85	0.05
162	SLE RA 19	-17	1272	5883	-49	-5.6	0.05
162	SLE RA 20	-17	1274	5988	-48.93	-5.94	0.05
162	SLE RA 21	-17	1292	5963	-49.73	-5.7	0.05
162	SLE FR 1	-15	1099	5245	-42.34	-5	0.04
162	SLE FR 2	-14	1105	5237	-42.61	-4.92	0.04
162	SLE FR 3	-15	1106	5277	-42.63	-5.04	0.04
162	SLE FR 4	-15	1151	5436	-44.36	-5.17	0.05
162	SLE FR 5	-15	1153	5476	-44.39	-5.29	0.05
162	SLE FR 6	-16	1177	5576	-45.27	-5.42	0.05
162	SLE QP 1	-15	1099	5245	-42.34	-5	0.04
162	SLE QP 2	-15	1145	5444	-44.1	-5.26	0.05
162	SLD 1	-7	1022	3950	-41.02	-3.39	0.01
162	SLD 2	-7	1022	3950	-41.02	-3.39	0.01
162	SLD 3	-1	535	3652	-20.04	-0.42	0.01
162	SLD 4	-1	535	3652	-20.04	-0.42	0.01
162	SLD 5	-21	1847	5447	-75	-9.21	0.03
162	SLD 6	-21	1847	5447	-75	-9.21	0.03
162	SLD 7	-3	223	4456	-5.05	0.71	0.04
162	SLD 8	-3	223	4456	-5.05	0.71	0.04
162	SLD 9	-28	2068	6432	-83.14	-11.22	0.05
162	SLD 10	-28	2068	6432	-83.14	-11.22	0.05
162	SLD 11	-9	443	5441	-13.19	-1.3	0.06
162	SLD 12	-9	443	5441	-13.19	-1.3	0.06
162	SLD 13	-29	1756	7236	-68.16	-10.1	0.08
162	SLD 14	-29	1756	7236	-68.16	-10.1	0.08
162	SLD 15	-24	1269	6938	-47.17	-7.12	0.08
162	SLD 16	-24	1269	6938	-47.17	-7.12	0.08
162	SLV 1	4	863	2021	-36.98	-1.38	-0.04
162	SLV 2	4	863	2021	-36.98	-1.38	-0.04
162	SLV 3	18	-273	1324	11.94	6.24	-0.03
162	SLV 4	18	-273	1324	11.94	6.24	-0.03
162	SLV 5	-31	2784	5473	-116.15	-15.65	0
162	SLV 6	-31	2784	5473	-116.15	-15.65	0
162	SLV 7	16	-1003	3152	46.9	9.75	0.04
162	SLV 8	16	-1003	3152	46.9	9.75	0.04
162	SLV 9	-47	3294	7736	-135.1	-20.26	0.05
162	SLV 10	-47	3294	7736	-135.1	-20.26	0.05
162	SLV 11	1	-493	5415	27.96	5.14	0.09
162	SLV 12	1	-493	5415	27.96	5.14	0.09
162	SLV 13	-49	2564	9564	-100.13	-16.75	0.12

Nodo	Cont.	Reazione a traslazione			Reazione a rotazione		
Ind.	N.br.	x	y	z	x	y	z
162	SLV 14	-49	2564	9564	-100.13	-16.75	0.12
162	SLV 15	-34	1428	8867	-51.21	-9.13	0.13
162	SLV 16	-34	1428	8867	-51.21	-9.13	0.13
163	SLU 1	-1	-859	4905	44.59	0.37	0
163	SLU 2	-1	-857	4839	44.42	0.37	0
163	SLU 3	-1	-888	5098	46.14	0.37	0
163	SLU 4	-1	-887	5058	46.04	0.38	0
163	SLU 5	-1	-877	4975	45.48	0.38	0
163	SLU 6	-1	-908	5234	47.2	0.38	0
163	SLU 7	-1	-906	5195	47.1	0.38	0
163	SLU 8	-1	-899	5177	46.71	0.37	0
163	SLU 9	-1	-897	5137	46.61	0.38	0
163	SLU 10	-1	-988	5708	51.4	0.44	0
163	SLU 11	-1	-1019	5968	53.12	0.44	0
163	SLU 12	-1	-1017	5928	53.02	0.44	0
163	SLU 13	-1	-1007	5845	52.46	0.44	0
163	SLU 14	-1	-1038	6104	54.18	0.44	0
163	SLU 15	-1	-1037	6064	54.08	0.44	0
163	SLU 16	-1	-1029	6047	53.69	0.43	0
163	SLU 17	-1	-1028	6007	53.59	0.44	0
163	SLU 18	-1	-1046	6147	54.56	0.45	0
163	SLU 19	-1	-1044	6107	54.46	0.46	0
163	SLU 20	-1	-1065	6283	55.62	0.46	0
163	SLU 21	-1	-1064	6244	55.52	0.46	0
163	SLU 22	-1	-969	5682	50.53	0.4	0
163	SLU 23	-1	-967	5616	50.36	0.41	0
163	SLU 24	-1	-998	5875	52.07	0.41	0
163	SLU 25	-1	-997	5836	51.98	0.42	0
163	SLU 26	-1	-987	5752	51.42	0.41	0
163	SLU 27	-1	-1017	6012	53.13	0.41	0
163	SLU 28	-1	-1016	5972	53.04	0.42	0
163	SLU 29	-1	-1008	5954	52.65	0.41	0
163	SLU 30	-1	-1007	5915	52.55	0.41	0
163	SLU 31	-1	-1097	6486	57.34	0.47	0
163	SLU 32	-1	-1128	6745	59.06	0.47	0
163	SLU 33	-1	-1127	6705	58.96	0.48	0
163	SLU 34	-1	-1117	6622	58.4	0.48	0
163	SLU 35	-1	-1148	6881	60.12	0.48	0
163	SLU 36	-1	-1147	6842	60.02	0.48	0
163	SLU 37	-1	-1139	6824	59.63	0.47	0
163	SLU 38	-1	-1138	6785	59.53	0.48	0
163	SLU 39	-1	-1155	6924	60.5	0.49	0
163	SLU 40	-1	-1154	6885	60.4	0.5	0
163	SLU 41	-1	-1175	7061	61.56	0.5	0
163	SLU 42	-1	-1174	7021	61.46	0.5	0
163	SLU 43	-1	-1079	6109	55.93	0.46	0
163	SLU 44	-1	-1077	6043	55.76	0.47	0
163	SLU 45	-1	-1108	6303	57.48	0.47	0
163	SLU 46	-1	-1107	6263	57.38	0.47	0
163	SLU 47	-1	-1097	6180	56.82	0.47	0
163	SLU 48	-1	-1128	6439	58.54	0.47	0
163	SLU 49	-1	-1127	6399	58.44	0.48	0
163	SLU 50	-1	-1119	6382	58.05	0.47	0
163	SLU 51	-1	-1117	6342	57.95	0.47	0
163	SLU 52	-1	-1208	6913	62.74	0.53	0
163	SLU 53	-1	-1239	7172	64.46	0.53	0
163	SLU 54	-1	-1237	7133	64.36	0.54	0
163	SLU 55	-1	-1227	7049	63.8	0.53	0
163	SLU 56	-1	-1258	7309	65.52	0.54	0
163	SLU 57	-1	-1257	7269	65.42	0.54	0
163	SLU 58	-1	-1249	7252	65.03	0.53	0
163	SLU 59	-1	-1248	7212	64.93	0.53	0
163	SLU 60	-1	-1266	7352	65.9	0.55	0
163	SLU 61	-1	-1265	7312	65.8	0.56	0
163	SLU 62	-1	-1285	7488	66.96	0.55	0
163	SLU 63	-1	-1284	7448	66.86	0.56	0
163	SLU 64	-1	-1189	6887	61.87	0.5	0
163	SLU 65	-1	-1187	6821	61.7	0.51	0
163	SLU 66	-1	-1218	7080	63.41	0.51	0
163	SLU 67	-1	-1217	7041	63.32	0.51	0
163	SLU 68	-1	-1207	6957	62.76	0.51	0
163	SLU 69	-1	-1238	7216	64.47	0.51	0
163	SLU 70	-1	-1236	7177	64.38	0.52	0
163	SLU 71	-1	-1228	7159	63.99	0.51	0
163	SLU 72	-1	-1227	7120	63.89	0.51	0
163	SLU 73	-1	-1318	7691	68.68	0.57	0
163	SLU 74	-1	-1348	7950	70.4	0.57	0
163	SLU 75	-1	-1347	7910	70.3	0.58	0
163	SLU 76	-1	-1337	7827	69.74	0.57	0
163	SLU 77	-1	-1368	8086	71.46	0.57	0
163	SLU 78	-1	-1367	8047	71.36	0.58	0
163	SLU 79	-1	-1359	8029	70.97	0.57	0
163	SLU 80	-1	-1358	7989	70.87	0.57	0
163	SLU 81	-1	-1376	8129	71.84	0.59	0
163	SLU 82	-1	-1374	8090	71.74	0.59	0
163	SLU 83	-1	-1395	8265	72.9	0.59	0
163	SLU 84	-1	-1394	8226	72.8	0.6	0
163	SLE RA 1	-1	-891	5127	46.28	0.38	0
163	SLE RA 2	-1	-889	5083	46.17	0.38	0
163	SLE RA 3	-1	-910	5256	47.32	0.38	0
163	SLE RA 4	-1	-909	5229	47.25	0.38	0

Nodo	Cont.	Reazione a traslazione			Reazione a rotazione		
Ind.	N.br.	x	y	z	x	y	z
163	SLE RA 5	-1	-902	5174	46.88	0.38	0
163	SLE RA 6	-1	-923	5346	48.02	0.38	0
163	SLE RA 7	-1	-922	5320	47.96	0.39	0
163	SLE RA 8	-1	-917	5308	47.7	0.38	0
163	SLE RA 9	-1	-916	5282	47.63	0.38	0
163	SLE RA 10	-1	-976	5662	50.83	0.42	0
163	SLE RA 11	-1	-997	5835	51.97	0.42	0
163	SLE RA 12	-1	-996	5809	51.9	0.43	0
163	SLE RA 13	-1	-989	5753	51.54	0.42	0
163	SLE RA 14	-1	-1010	5926	52.68	0.43	0
163	SLE RA 15	-1	-1009	5900	52.61	0.43	0
163	SLE RA 16	-1	-1004	5888	52.35	0.42	0
163	SLE RA 17	-1	-1003	5862	52.29	0.42	0
163	SLE RA 18	-1	-1015	5955	52.93	0.44	0
163	SLE RA 19	-1	-1014	5929	52.87	0.44	0
163	SLE RA 20	-1	-1028	6046	53.64	0.44	0
163	SLE RA 21	-1	-1027	6019	53.57	0.44	0
163	SLE FR 1	-1	-891	5127	46.28	0.38	0
163	SLE FR 2	-1	-890	5118	46.26	0.38	0
163	SLE FR 3	-1	-896	5163	46.57	0.38	0
163	SLE FR 4	-1	-928	5366	48.26	0.4	0
163	SLE FR 5	-1	-933	5411	48.56	0.39	0
163	SLE FR 6	-1	-953	5541	49.61	0.41	0
163	SLE QP 1	-1	-891	5127	46.28	0.38	0
163	SLE QP 2	-1	-928	5375	48.28	0.39	0
163	SLD 1	-1	-967	3876	23.37	1.65	-0.01
163	SLD 2	-1	-967	3876	23.37	1.65	-0.01
163	SLD 3	4	-1425	4648	46.85	3.03	-0.02
163	SLD 4	4	-1425	4648	46.85	3.03	-0.02
163	SLD 5	-8	-246	3756	5.19	-1.32	0.01
163	SLD 6	-8	-246	3756	5.19	-1.32	0.01
163	SLD 7	8	-1771	6326	83.46	3.28	-0.02
163	SLD 8	8	-1771	6326	83.46	3.28	-0.02
163	SLD 9	-10	-85	4424	13.09	-2.49	0.02
163	SLD 10	-10	-85	4424	13.09	-2.49	0.02
163	SLD 11	6	-1610	6994	91.36	2.11	-0.01
163	SLD 12	6	-1610	6994	91.36	2.11	-0.01
163	SLD 13	-6	-431	6103	49.71	-2.24	0.02
163	SLD 14	-6	-431	6103	49.71	-2.24	0.02
163	SLD 15	-1	-888	6874	73.19	-0.86	0.01
163	SLD 16	-1	-888	6874	73.19	-0.86	0.01
163	SLV 1	-1	-1015	1885	-9.69	3.27	-0.02
163	SLV 2	-1	-1015	1885	-9.69	3.27	-0.02
163	SLV 3	11	-2082	3689	45.07	6.79	-0.05
163	SLV 4	11	-2082	3689	45.07	6.79	-0.05
163	SLV 5	-19	664	1592	-52.17	-4.09	0.03
163	SLV 6	-19	664	1592	-52.17	-4.09	0.03
163	SLV 7	22	-2892	7605	130.37	7.66	-0.06
163	SLV 8	22	-2892	7605	130.37	7.66	-0.06
163	SLV 9	-23	1036	3145	-33.81	-6.87	0.05
163	SLV 10	-23	1036	3145	-33.81	-6.87	0.05
163	SLV 11	18	-2519	9158	148.73	4.88	-0.04
163	SLV 12	18	-2519	9158	148.73	4.88	-0.04
163	SLV 13	-13	226	7061	51.49	-6	0.05
163	SLV 14	-13	226	7061	51.49	-6	0.05
163	SLV 15	-1	-841	8865	106.25	-2.48	0.02
163	SLV 16	-1	-841	8865	106.25	-2.48	0.02
164	SLU 1	-13	-896	3957	45.82	-3.02	1.2
164	SLU 2	-12	-892	3889	45.48	-2.93	1.16
164	SLU 3	-13	-928	4081	47.43	-3.1	1.23
164	SLU 4	-13	-925	4040	47.23	-3.05	1.2
164	SLU 5	-12	-914	3963	46.56	-2.97	1.16
164	SLU 6	-13	-950	4155	48.5	-3.14	1.24
164	SLU 7	-13	-947	4114	48.3	-3.09	1.21
164	SLU 8	-13	-940	4106	47.97	-3.1	1.22
164	SLU 9	-13	-937	4065	47.77	-3.05	1.19
164	SLU 10	-15	-1026	4572	52.59	-3.53	1.41
164	SLU 11	-16	-1062	4764	54.53	-3.69	1.48
164	SLU 12	-16	-1060	4723	54.33	-3.64	1.45
164	SLU 13	-15	-1048	4646	53.66	-3.57	1.42
164	SLU 14	-16	-1084	4838	55.61	-3.73	1.49
164	SLU 15	-16	-1082	4797	55.41	-3.68	1.46
164	SLU 16	-16	-1074	4788	55.08	-3.69	1.47
164	SLU 17	-16	-1071	4747	54.87	-3.64	1.45
164	SLU 18	-17	-1088	4932	55.97	-3.87	1.57
164	SLU 19	-17	-1085	4892	55.77	-3.82	1.54
164	SLU 20	-17	-1110	5007	57.05	-3.91	1.57
164	SLU 21	-17	-1107	4966	56.84	-3.86	1.55
164	SLU 22	-16	-1013	4560	52	-3.54	1.43
164	SLU 23	-15	-1008	4492	51.67	-3.46	1.38
164	SLU 24	-16	-1044	4684	53.61	-3.62	1.45
164	SLU 25	-16	-1042	4643	53.41	-3.57	1.43
164	SLU 26	-15	-1030	4566	52.74	-3.5	1.39
164	SLU 27	-16	-1066	4758	54.68	-3.66	1.46
164	SLU 28	-16	-1064	4717	54.48	-3.61	1.43
164	SLU 29	-16	-1056	4709	54.15	-3.62	1.45
164	SLU 30	-15	-1053	4668	53.95	-3.57	1.42
164	SLU 31	-18	-1143	5174	58.77	-4.05	1.64
164	SLU 32	-19	-1179	5367	60.71	-4.22	1.71
164	SLU 33	-18	-1176	5326	60.51	-4.17	1.68
164	SLU 34	-18	-1164	5249	59.84	-4.09	1.65

Nodo	Cont.	Reazione a traslazione			Reazione a rotazione		
Ind.	N.br.	x	y	z	x	y	z
164	SLU 35	-19	-1201	5441	61.79	-4.26	1.72
164	SLU 36	-18	-1198	5400	61.59	-4.21	1.69
164	SLU 37	-19	-1190	5391	61.26	-4.22	1.7
164	SLU 38	-18	-1188	5350	61.05	-4.17	1.67
164	SLU 39	-20	-1204	5535	62.15	-4.39	1.79
164	SLU 40	-19	-1202	5494	61.95	-4.34	1.76
164	SLU 41	-20	-1226	5610	63.23	-4.43	1.8
164	SLU 42	-19	-1224	5569	63.02	-4.38	1.77
164	SLU 43	-16	-1125	4937	57.45	-3.74	1.49
164	SLU 44	-15	-1121	4869	57.11	-3.66	1.44
164	SLU 45	-16	-1157	5061	59.06	-3.82	1.51
164	SLU 46	-16	-1154	5020	58.85	-3.77	1.48
164	SLU 47	-15	-1143	4943	58.19	-3.7	1.45
164	SLU 48	-16	-1179	5135	60.13	-3.86	1.52
164	SLU 49	-16	-1176	5094	59.93	-3.81	1.49
164	SLU 50	-16	-1169	5086	59.6	-3.82	1.5
164	SLU 51	-16	-1166	5045	59.4	-3.77	1.47
164	SLU 52	-18	-1255	5552	64.22	-4.26	1.69
164	SLU 53	-19	-1291	5744	66.16	-4.42	1.76
164	SLU 54	-19	-1289	5703	65.96	-4.37	1.74
164	SLU 55	-18	-1277	5626	65.29	-4.3	1.7
164	SLU 56	-19	-1313	5818	67.24	-4.46	1.77
164	SLU 57	-19	-1310	5777	67.03	-4.41	1.75
164	SLU 58	-19	-1303	5769	66.7	-4.42	1.76
164	SLU 59	-19	-1300	5728	66.5	-4.37	1.73
164	SLU 60	-20	-1317	5913	67.6	-4.59	1.85
164	SLU 61	-20	-1314	5872	67.4	-4.55	1.82
164	SLU 62	-20	-1339	5987	68.67	-4.64	1.86
164	SLU 63	-20	-1336	5946	68.47	-4.59	1.83
164	SLU 64	-19	-1242	5540	63.63	-4.26	1.71
164	SLU 65	-18	-1237	5472	63.29	-4.18	1.66
164	SLU 66	-19	-1273	5664	65.24	-4.34	1.74
164	SLU 67	-19	-1271	5623	65.04	-4.3	1.71
164	SLU 68	-18	-1259	5546	64.37	-4.22	1.67
164	SLU 69	-19	-1295	5738	66.31	-4.38	1.75
164	SLU 70	-19	-1293	5697	66.11	-4.34	1.72
164	SLU 71	-19	-1285	5689	65.78	-4.35	1.73
164	SLU 72	-18	-1282	5648	65.58	-4.3	1.7
164	SLU 73	-21	-1371	6155	70.4	-4.78	1.92
164	SLU 74	-22	-1408	6347	72.34	-4.94	1.99
164	SLU 75	-21	-1405	6306	72.14	-4.89	1.96
164	SLU 76	-21	-1393	6229	71.47	-4.82	1.93
164	SLU 77	-22	-1429	6421	73.42	-4.98	2
164	SLU 78	-21	-1427	6380	73.21	-4.93	1.97
164	SLU 79	-22	-1419	6372	72.88	-4.94	1.98
164	SLU 80	-21	-1417	6331	72.68	-4.89	1.96
164	SLU 81	-23	-1433	6516	73.78	-5.12	2.08
164	SLU 82	-22	-1431	6475	73.58	-5.07	2.05
164	SLU 83	-23	-1455	6590	74.86	-5.16	2.08
164	SLU 84	-22	-1453	6549	74.65	-5.11	2.06
164	SLE RA 1	-14	-929	4129	47.59	-3.17	1.27
164	SLE RA 2	-13	-927	4084	47.36	-3.11	1.24
164	SLE RA 3	-14	-951	4212	48.66	-3.22	1.28
164	SLE RA 4	-14	-949	4184	48.52	-3.19	1.26
164	SLE RA 5	-13	-941	4133	48.08	-3.14	1.24
164	SLE RA 6	-14	-965	4261	49.38	-3.25	1.29
164	SLE RA 7	-14	-963	4234	49.24	-3.21	1.27
164	SLE RA 8	-14	-958	4228	49.02	-3.22	1.28
164	SLE RA 9	-14	-957	4201	48.89	-3.19	1.26
164	SLE RA 10	-15	-1016	4539	52.1	-3.51	1.41
164	SLE RA 11	-16	-1040	4667	53.4	-3.62	1.45
164	SLE RA 12	-16	-1038	4640	53.26	-3.58	1.43
164	SLE RA 13	-15	-1031	4588	52.82	-3.54	1.41
164	SLE RA 14	-16	-1055	4717	54.11	-3.64	1.46
164	SLE RA 15	-16	-1053	4689	53.98	-3.61	1.44
164	SLE RA 16	-16	-1048	4684	53.76	-3.62	1.45
164	SLE RA 17	-16	-1046	4656	53.62	-3.58	1.43
164	SLE RA 18	-17	-1057	4780	54.35	-3.73	1.51
164	SLE RA 19	-16	-1056	4752	54.22	-3.7	1.49
164	SLE RA 20	-17	-1072	4829	55.07	-3.76	1.52
164	SLE RA 21	-16	-1070	4802	54.94	-3.73	1.5
164	SLE FR 1	-14	-929	4129	47.59	-3.17	1.27
164	SLE FR 2	-14	-929	4120	47.54	-3.15	1.26
164	SLE FR 3	-14	-935	4149	47.88	-3.18	1.27
164	SLE FR 4	-15	-967	4315	49.57	-3.33	1.33
164	SLE FR 5	-15	-974	4344	49.9	-3.35	1.34
164	SLE FR 6	-15	-993	4454	50.97	-3.45	1.39
164	SLE QP 1	-14	-929	4129	47.59	-3.17	1.27
164	SLE QP 2	-15	-968	4324	49.62	-3.34	1.34
164	SLD 1	-42	-388	5267	53.44	-6.33	3.08
164	SLD 2	-42	-388	5267	53.44	-6.33	3.08
164	SLD 3	-30	-854	5892	77.1	-5.34	2.57
164	SLD 4	-30	-854	5892	77.1	-5.34	2.57
164	SLD 5	-40	-88	3658	14.88	-5.74	2.64
164	SLD 6	-40	-88	3658	14.88	-5.74	2.64
164	SLD 7	-2	-1640	5743	93.75	-2.43	0.93
164	SLD 8	-2	-1640	5743	93.75	-2.43	0.93
164	SLD 9	-27	-296	2905	5.49	-4.24	1.75
164	SLD 10	-27	-296	2905	5.49	-4.24	1.75
164	SLD 11	11	-1848	4990	84.35	-0.93	0.04
164	SLD 12	11	-1848	4990	84.35	-0.93	0.04

Nodo	Cont.	Reazione a traslazione			Reazione a rotazione		
Ind.	N.br.	x	y	z	x	y	z
164	SLD 13	1	-1082	2757	22.13	-1.33	0.11
164	SLD 14	1	-1082	2757	22.13	-1.33	0.11
164	SLD 15	13	-1548	3382	45.79	-0.34	-0.4
164	SLD 16	13	-1548	3382	45.79	-0.34	-0.4
164	SLV 1	-77	373	6488	58.28	-10.22	5.32
164	SLV 2	-77	373	6488	58.28	-10.22	5.32
164	SLV 3	-50	-713	7949	113.45	-7.88	4.12
164	SLV 4	-50	-713	7949	113.45	-7.88	4.12
164	SLV 5	-74	1081	2756	-31.47	-8.94	4.35
164	SLV 6	-74	1081	2756	-31.47	-8.94	4.35
164	SLV 7	15	-2538	7629	152.46	-1.16	0.36
164	SLV 8	15	-2538	7629	152.46	-1.16	0.36
164	SLV 9	-44	603	1020	-53.22	-5.51	2.32
164	SLV 10	-44	603	1020	-53.22	-5.51	2.32
164	SLV 11	45	-3017	5892	130.71	2.27	-1.67
164	SLV 12	45	-3017	5892	130.71	2.27	-1.67
164	SLV 13	21	-1223	699	-14.22	1.21	-1.44
164	SLV 14	21	-1223	699	-14.22	1.21	-1.44
164	SLV 15	48	-2309	2161	40.96	3.55	-2.64
164	SLV 16	48	-2309	2161	40.96	3.55	-2.64
165	SLU 1	-30	22	2190	3.16	-4.5	1.91
165	SLU 2	-30	20	2165	3.19	-4.44	1.89
165	SLU 3	-31	27	2256	3.12	-4.66	1.98
165	SLU 4	-31	26	2241	3.13	-4.62	1.97
165	SLU 5	-31	23	2209	3.16	-4.55	1.93
165	SLU 6	-32	30	2301	3.08	-4.77	2.03
165	SLU 7	-32	29	2285	3.1	-4.73	2.01
165	SLU 8	-32	28	2279	3.1	-4.72	2.01
165	SLU 9	-31	27	2263	3.11	-4.68	1.99
165	SLU 10	-35	21	2567	3.96	-5.25	2.24
165	SLU 11	-37	28	2659	3.89	-5.47	2.33
165	SLU 12	-36	27	2643	3.9	-5.43	2.32
165	SLU 13	-36	24	2611	3.93	-5.35	2.28
165	SLU 14	-37	31	2703	3.85	-5.57	2.38
165	SLU 15	-37	30	2688	3.87	-5.54	2.36
165	SLU 16	-37	29	2681	3.87	-5.53	2.35
165	SLU 17	-37	28	2666	3.88	-5.49	2.34
165	SLU 18	-38	24	2765	4.26	-5.65	2.41
165	SLU 19	-38	22	2750	4.28	-5.62	2.4
165	SLU 20	-39	27	2809	4.23	-5.76	2.46
165	SLU 21	-38	26	2794	4.25	-5.73	2.44
165	SLU 22	-35	37	2508	3.23	-5.19	2.22
165	SLU 23	-35	35	2482	3.26	-5.13	2.2
165	SLU 24	-36	41	2574	3.18	-5.35	2.29
165	SLU 25	-36	40	2559	3.2	-5.31	2.27
165	SLU 26	-35	38	2526	3.22	-5.24	2.24
165	SLU 27	-37	44	2618	3.15	-5.46	2.34
165	SLU 28	-37	43	2603	3.17	-5.42	2.32
165	SLU 29	-36	43	2596	3.16	-5.41	2.31
165	SLU 30	-36	42	2581	3.18	-5.37	2.3
165	SLU 31	-40	36	2885	4.03	-5.94	2.55
165	SLU 32	-41	42	2976	3.95	-6.16	2.64
165	SLU 33	-41	41	2961	3.97	-6.12	2.62
165	SLU 34	-41	39	2929	3.99	-6.05	2.59
165	SLU 35	-42	45	3021	3.92	-6.27	2.69
165	SLU 36	-42	44	3005	3.93	-6.23	2.67
165	SLU 37	-42	44	2999	3.93	-6.22	2.66
165	SLU 38	-42	43	2983	3.95	-6.18	2.65
165	SLU 39	-43	38	3083	4.33	-6.35	2.72
165	SLU 40	-42	37	3067	4.34	-6.31	2.71
165	SLU 41	-43	41	3127	4.29	-6.46	2.77
165	SLU 42	-43	40	3111	4.31	-6.42	2.75
165	SLU 43	-38	24	2739	4.09	-5.61	2.38
165	SLU 44	-37	22	2713	4.12	-5.55	2.35
165	SLU 45	-39	28	2805	4.04	-5.77	2.45
165	SLU 46	-38	27	2789	4.06	-5.73	2.43
165	SLU 47	-38	25	2757	4.08	-5.66	2.4
165	SLU 48	-39	31	2849	4.01	-5.88	2.5
165	SLU 49	-39	30	2834	4.03	-5.84	2.48
165	SLU 50	-39	30	2827	4.02	-5.83	2.47
165	SLU 51	-39	29	2812	4.04	-5.79	2.46
165	SLU 52	-43	23	3115	4.89	-6.36	2.7
165	SLU 53	-44	29	3207	4.81	-6.58	2.8
165	SLU 54	-44	28	3192	4.83	-6.54	2.78
165	SLU 55	-43	26	3160	4.85	-6.47	2.75
165	SLU 56	-45	32	3251	4.78	-6.69	2.85
165	SLU 57	-45	31	3236	4.8	-6.65	2.83
165	SLU 58	-44	31	3229	4.79	-6.64	2.82
165	SLU 59	-44	30	3214	4.81	-6.6	2.81
165	SLU 60	-45	25	3313	5.19	-6.77	2.88
165	SLU 61	-45	24	3298	5.21	-6.73	2.87
165	SLU 62	-46	28	3358	5.16	-6.87	2.93
165	SLU 63	-46	27	3342	5.17	-6.84	2.91
165	SLU 64	-42	38	3056	4.16	-6.3	2.69
165	SLU 65	-42	36	3030	4.18	-6.24	2.66
165	SLU 66	-43	43	3122	4.11	-6.46	2.76
165	SLU 67	-43	42	3107	4.12	-6.42	2.74
165	SLU 68	-43	40	3075	4.15	-6.35	2.71
165	SLU 69	-44	46	3166	4.08	-6.57	2.8
165	SLU 70	-44	45	3151	4.09	-6.53	2.79
165	SLU 71	-44	45	3145	4.09	-6.52	2.78

Nodo	Cont.	Reazione a traslazione			Reazione a rotazione		
Ind.	N.br.	x	y	z	x	y	z
165	SLU 72	-44	43	3129	4.1	-6.49	2.77
165	SLU 73	-47	37	3433	4.95	-7.05	3.01
165	SLU 74	-49	44	3525	4.88	-7.27	3.11
165	SLU 75	-49	43	3509	4.89	-7.23	3.09
165	SLU 76	-48	41	3477	4.92	-7.16	3.06
165	SLU 77	-50	47	3569	4.84	-7.38	3.15
165	SLU 78	-49	46	3553	4.86	-7.34	3.14
165	SLU 79	-49	46	3547	4.86	-7.33	3.13
165	SLU 80	-49	44	3531	4.87	-7.29	3.12
165	SLU 81	-50	40	3631	5.25	-7.46	3.19
165	SLU 82	-50	39	3615	5.27	-7.42	3.17
165	SLU 83	-51	43	3675	5.22	-7.57	3.24
165	SLU 84	-51	42	3660	5.24	-7.53	3.22
165	SLE RA 1	-32	26	2281	3.18	-4.7	2
165	SLE RA 2	-31	25	2264	3.2	-4.65	1.98
165	SLE RA 3	-32	29	2325	3.15	-4.8	2.05
165	SLE RA 4	-32	29	2315	3.16	-4.78	2.04
165	SLE RA 5	-32	27	2293	3.18	-4.73	2.01
165	SLE RA 6	-33	31	2355	3.13	-4.87	2.08
165	SLE RA 7	-33	31	2344	3.14	-4.85	2.07
165	SLE RA 8	-33	30	2340	3.14	-4.84	2.06
165	SLE RA 9	-32	30	2330	3.15	-4.82	2.05
165	SLE RA 10	-35	26	2532	3.71	-5.19	2.22
165	SLE RA 11	-36	30	2593	3.66	-5.34	2.28
165	SLE RA 12	-36	29	2583	3.67	-5.32	2.27
165	SLE RA 13	-35	28	2562	3.69	-5.27	2.25
165	SLE RA 14	-36	32	2623	3.64	-5.41	2.31
165	SLE RA 15	-36	31	2613	3.65	-5.39	2.3
165	SLE RA 16	-36	31	2608	3.65	-5.38	2.3
165	SLE RA 17	-36	30	2598	3.66	-5.36	2.29
165	SLE RA 18	-37	27	2664	3.91	-5.47	2.34
165	SLE RA 19	-37	27	2654	3.93	-5.44	2.32
165	SLE RA 20	-37	29	2694	3.89	-5.54	2.37
165	SLE RA 21	-37	29	2683	3.9	-5.52	2.35
165	SLE FR 1	-32	26	2281	3.18	-4.7	2
165	SLE FR 2	-32	26	2278	3.19	-4.69	2
165	SLE FR 3	-32	27	2293	3.17	-4.73	2.01
165	SLE FR 4	-33	26	2393	3.41	-4.92	2.1
165	SLE FR 5	-33	27	2408	3.39	-4.96	2.11
165	SLE FR 6	-34	27	2473	3.55	-5.08	2.17
165	SLE QP 1	-32	26	2281	3.18	-4.7	2
165	SLE QP 2	-33	27	2396	3.4	-4.93	2.1
165	SLD 1	-27	-51	2171	7.63	-2.75	1.79
165	SLD 2	-27	-51	2171	7.63	-2.75	1.79
165	SLD 3	-31	45	2469	2.49	-3.33	2.02
165	SLD 4	-31	45	2469	2.49	-3.33	2.02
165	SLD 5	-25	-142	1876	12.46	-3.4	1.66
165	SLD 6	-25	-142	1876	12.46	-3.4	1.66
165	SLD 7	-39	178	2870	-4.66	-5.32	2.43
165	SLD 8	-39	178	2870	-4.66	-5.32	2.43
165	SLD 9	-27	-125	1922	11.46	-4.54	1.78
165	SLD 10	-27	-125	1922	11.46	-4.54	1.78
165	SLD 11	-41	196	2916	-5.65	-6.45	2.55
165	SLD 12	-41	196	2916	-5.65	-6.45	2.55
165	SLD 13	-35	8	2323	4.31	-6.53	2.19
165	SLD 14	-35	8	2323	4.31	-6.53	2.19
165	SLD 15	-39	104	2621	-0.82	-7.1	2.42
165	SLD 16	-39	104	2621	-0.82	-7.1	2.42
165	SLV 1	-20	-157	1867	13.38	0.22	1.35
165	SLV 2	-20	-157	1867	13.38	0.22	1.35
165	SLV 3	-29	69	2563	1.35	-1.16	1.89
165	SLV 4	-29	69	2563	1.35	-1.16	1.89
165	SLV 5	-14	-371	1183	24.64	-1.29	1.06
165	SLV 6	-14	-371	1183	24.64	-1.29	1.06
165	SLV 7	-47	381	3500	-15.46	-5.89	2.86
165	SLV 8	-47	381	3500	-15.46	-5.89	2.86
165	SLV 9	-19	-328	1292	22.26	-3.97	1.34
165	SLV 10	-19	-328	1292	22.26	-3.97	1.34
165	SLV 11	-52	424	3609	-17.84	-8.56	3.15
165	SLV 12	-52	424	3609	-17.84	-8.56	3.15
165	SLV 13	-37	-15	2229	5.46	-8.7	2.31
165	SLV 14	-37	-15	2229	5.46	-8.7	2.31
165	SLV 15	-47	210	2925	-6.57	-10.07	2.85
165	SLV 16	-47	210	2925	-6.57	-10.07	2.85
166	SLU 1	9	-52	5060	2.05	8.9	-0.01
166	SLU 2	11	56	4966	-2.5	9.06	-0.01
166	SLU 3	9	-53	5219	2.13	9.24	-0.01
166	SLU 4	10	11	5163	-0.6	9.33	-0.01
166	SLU 5	11	55	5074	-2.45	9.27	-0.01
166	SLU 6	10	-55	5327	2.19	9.46	-0.01
166	SLU 7	11	10	5270	-0.54	9.55	-0.01
166	SLU 8	9	-54	5276	2.17	9.34	-0.01
166	SLU 9	10	11	5219	-0.57	9.43	-0.01
166	SLU 10	12	48	5551	-2.17	10.41	-0.01
166	SLU 11	11	-62	5804	2.47	10.59	-0.01
166	SLU 12	12	3	5748	-0.26	10.69	-0.01
166	SLU 13	12	47	5659	-2.11	10.63	-0.01
166	SLU 14	11	-63	5912	2.53	10.81	-0.01
166	SLU 15	12	2	5855	-0.21	10.9	-0.01
166	SLU 16	11	-62	5861	2.5	10.69	-0.01
166	SLU 17	12	3	5804	-0.23	10.78	-0.01

Nodo	Cont.	Reazione a traslazione			Reazione a rotazione		
Ind.	N.br.	x	y	z	x	y	z
166	SLU 18	11	-64	5896	2.53	10.84	-0.01
166	SLU 19	12	1	5839	-0.2	10.93	-0.01
166	SLU 20	11	-65	6004	2.59	11.05	-0.01
166	SLU 21	12	0	5947	-0.15	11.15	-0.01
166	SLU 22	10	-60	5636	2.38	10.21	-0.01
166	SLU 23	12	48	5541	-2.18	10.36	-0.01
166	SLU 24	11	-61	5794	2.46	10.55	-0.01
166	SLU 25	12	3	5738	-0.27	10.64	-0.01
166	SLU 26	12	47	5649	-2.12	10.58	-0.01
166	SLU 27	11	-63	5902	2.52	10.77	-0.01
166	SLU 28	12	2	5845	-0.21	10.86	-0.01
166	SLU 29	11	-62	5851	2.49	10.65	-0.01
166	SLU 30	12	3	5794	-0.24	10.74	-0.01
166	SLU 31	13	40	6126	-1.84	11.72	-0.01
166	SLU 32	12	-70	6379	2.79	11.9	-0.01
166	SLU 33	13	-5	6323	0.06	11.99	-0.01
166	SLU 34	14	39	6234	-1.79	11.94	-0.01
166	SLU 35	12	-71	6487	2.85	12.12	-0.01
166	SLU 36	13	-6	6430	0.12	12.21	-0.01
166	SLU 37	12	-70	6436	2.83	12	-0.01
166	SLU 38	13	-5	6379	0.1	12.09	-0.01
166	SLU 39	12	-72	6471	2.85	12.14	-0.01
166	SLU 40	13	-7	6414	0.12	12.24	-0.01
166	SLU 41	13	-73	6579	2.91	12.36	-0.01
166	SLU 42	14	-8	6522	0.18	12.46	-0.01
166	SLU 43	11	-64	6381	2.55	11.12	-0.01
166	SLU 44	13	44	6287	-2	11.28	-0.01
166	SLU 45	12	-66	6540	2.64	11.46	-0.01
166	SLU 46	13	-1	6484	-0.1	11.55	-0.01
166	SLU 47	13	43	6395	-1.94	11.49	-0.01
166	SLU 48	12	-67	6648	2.7	11.68	-0.01
166	SLU 49	13	-2	6591	-0.04	11.77	-0.01
166	SLU 50	12	-67	6597	2.67	11.56	-0.01
166	SLU 51	13	-2	6540	-0.06	11.65	-0.01
166	SLU 52	14	35	6872	-1.67	12.63	-0.01
166	SLU 53	13	-75	7125	2.97	12.81	-0.01
166	SLU 54	14	-10	7069	0.24	12.91	-0.01
166	SLU 55	14	34	6980	-1.61	12.85	-0.01
166	SLU 56	13	-76	7233	3.03	13.03	-0.01
166	SLU 57	14	-11	7176	0.3	13.13	-0.01
166	SLU 58	13	-75	7182	3.01	12.91	-0.01
166	SLU 59	14	-10	7125	0.27	13.01	-0.01
166	SLU 60	13	-76	7217	3.03	13.06	-0.01
166	SLU 61	14	-12	7160	0.3	13.15	-0.01
166	SLU 62	13	-78	7325	3.09	13.27	-0.01
166	SLU 63	14	-13	7268	0.36	13.37	-0.01
166	SLU 64	13	-72	6957	2.88	12.43	-0.01
166	SLU 65	14	36	6862	-1.68	12.59	-0.01
166	SLU 66	13	-74	7115	2.96	12.77	-0.01
166	SLU 67	14	-9	7059	0.23	12.86	-0.01
166	SLU 68	14	35	6970	-1.62	12.8	-0.01
166	SLU 69	13	-75	7223	3.02	12.99	-0.01
166	SLU 70	14	-10	7166	0.29	13.08	-0.01
166	SLU 71	13	-75	7172	3	12.87	-0.01
166	SLU 72	14	-10	7115	0.26	12.96	-0.01
166	SLU 73	16	27	7447	-1.34	13.94	-0.01
166	SLU 74	14	-83	7700	3.3	14.12	-0.01
166	SLU 75	15	-18	7644	0.56	14.22	-0.01
166	SLU 76	16	26	7555	-1.28	14.16	-0.01
166	SLU 77	15	-84	7808	3.36	14.34	-0.01
166	SLU 78	16	-19	7751	0.62	14.43	-0.01
166	SLU 79	14	-83	7757	3.33	14.22	-0.01
166	SLU 80	15	-18	7700	0.6	14.31	-0.01
166	SLU 81	15	-84	7792	3.36	14.37	-0.01
166	SLU 82	16	-20	7735	0.62	14.46	-0.01
166	SLU 83	15	-86	7900	3.42	14.58	-0.01
166	SLU 84	16	-21	7843	0.68	14.68	-0.01
166	SLE RA 1	9	-54	5225	2.14	9.27	-0.01
166	SLE RA 2	10	18	5162	-0.89	9.38	-0.01
166	SLE RA 3	10	-55	5331	2.2	9.5	-0.01
166	SLE RA 4	10	-12	5293	0.38	9.56	-0.01
166	SLE RA 5	11	17	5233	-0.85	9.52	-0.01
166	SLE RA 6	10	-56	5402	2.24	9.64	-0.01
166	SLE RA 7	10	-13	5365	0.42	9.71	-0.01
166	SLE RA 8	10	-55	5368	2.22	9.57	-0.01
166	SLE RA 9	10	-12	5330	0.4	9.63	-0.01
166	SLE RA 10	11	13	5552	-0.67	10.28	-0.01
166	SLE RA 11	11	-61	5721	2.42	10.4	-0.01
166	SLE RA 12	11	-18	5683	0.6	10.46	-0.01
166	SLE RA 13	12	12	5623	-0.63	10.43	-0.01
166	SLE RA 14	11	-61	5792	2.46	10.55	-0.01
166	SLE RA 15	11	-18	5755	0.64	10.61	-0.01
166	SLE RA 16	11	-61	5758	2.44	10.47	-0.01
166	SLE RA 17	11	-18	5720	0.62	10.53	-0.01
166	SLE RA 18	11	-62	5782	2.46	10.56	-0.01
166	SLE RA 19	11	-19	5744	0.64	10.63	-0.01
166	SLE RA 20	11	-63	5854	2.5	10.71	-0.01
166	SLE RA 21	12	-19	5816	0.68	10.77	-0.01
166	SLE FR 1	9	-54	5225	2.14	9.27	-0.01
166	SLE FR 2	10	-39	5212	1.54	9.29	-0.01
166	SLE FR 3	9	-54	5253	2.16	9.33	-0.01

Nodo	Cont.	Reazione a traslazione			Reazione a rotazione		
Ind.	N.br.	x	y	z	x	y	z
166	SLE FR 4	10	-42	5379	1.63	9.68	-0.01
166	SLE FR 5	10	-57	5421	2.25	9.72	-0.01
166	SLE FR 6	10	-58	5503	2.3	9.92	-0.01
166	SLE QP 1	9	-54	5225	2.14	9.27	-0.01
166	SLE QP 2	10	-56	5392	2.24	9.66	-0.01
166	SLD 1	19	165	6640	-7.25	14.98	-0.01
166	SLD 2	19	165	6640	-7.25	14.98	-0.01
166	SLD 3	22	-390	6723	16.3	15.44	-0.01
166	SLD 4	22	-390	6723	16.3	15.44	-0.01
166	SLD 5	9	851	5640	-36.32	10.56	-0.01
166	SLD 6	9	851	5640	-36.32	10.56	-0.01
166	SLD 7	17	-997	5917	42.17	12.09	-0.01
166	SLD 8	17	-997	5917	42.17	12.09	-0.01
166	SLD 9	3	884	4866	-37.69	7.23	0
166	SLD 10	3	884	4866	-37.69	7.23	0
166	SLD 11	10	-963	5144	40.8	8.76	-0.01
166	SLD 12	10	-963	5144	40.8	8.76	-0.01
166	SLD 13	-2	277	4061	-11.82	3.88	0
166	SLD 14	-2	277	4061	-11.82	3.88	0
166	SLD 15	0	-277	4144	11.73	4.34	0
166	SLD 16	0	-277	4144	11.73	4.34	0
166	SLV 1	32	452	8280	-19.58	21.93	-0.02
166	SLV 2	32	452	8280	-19.58	21.93	-0.02
166	SLV 3	38	-840	8484	35.32	23.09	-0.03
166	SLV 4	38	-840	8484	35.32	23.09	-0.03
166	SLV 5	8	2057	5949	-87.58	11.58	-0.01
166	SLV 6	8	2057	5949	-87.58	11.58	-0.01
166	SLV 7	27	-2252	6629	95.43	15.45	-0.02
166	SLV 8	27	-2252	6629	95.43	15.45	-0.02
166	SLV 9	-8	2139	4155	-90.95	3.88	0.01
166	SLV 10	-8	2139	4155	-90.95	3.88	0.01
166	SLV 11	12	-2169	4835	92.05	7.74	-0.01
166	SLV 12	12	-2169	4835	92.05	7.74	-0.01
166	SLV 13	-19	727	2300	-30.84	-3.76	0.01
166	SLV 14	-19	727	2300	-30.84	-3.76	0.01
166	SLV 15	-13	-565	2504	24.06	-2.61	0.01
166	SLV 16	-13	-565	2504	24.06	-2.61	0.01
167	SLU 1	1932	0	5043	-0.12	41.95	0.02
167	SLU 2	1887	3	4935	-0.39	40.87	0.07
167	SLU 3	2000	0	5216	-0.12	43.46	0.02
167	SLU 4	1973	1	5151	-0.28	42.81	0.05
167	SLU 5	1926	3	5036	-0.39	41.72	0.07
167	SLU 6	2039	0	5316	-0.12	44.31	0.02
167	SLU 7	2012	1	5252	-0.28	43.66	0.05
167	SLU 8	2010	0	5244	-0.12	43.65	0.02
167	SLU 9	1982	1	5179	-0.28	43	0.05
167	SLU 10	2269	3	5889	-0.41	49.58	0.08
167	SLU 11	2382	0	6170	-0.14	52.17	0.02
167	SLU 12	2355	2	6106	-0.3	51.52	0.06
167	SLU 13	2308	3	5990	-0.41	50.43	0.08
167	SLU 14	2421	0	6271	-0.14	53.02	0.02
167	SLU 15	2394	2	6206	-0.3	52.37	0.06
167	SLU 16	2392	0	6198	-0.14	52.36	0.02
167	SLU 17	2365	1	6134	-0.3	51.71	0.06
167	SLU 18	2478	0	6406	-0.15	54.39	0.03
167	SLU 19	2451	2	6341	-0.31	53.74	0.06
167	SLU 20	2517	0	6507	-0.15	55.24	0.03
167	SLU 21	2490	2	6442	-0.31	54.59	0.06
167	SLU 22	2280	0	5914	-0.14	49.85	0.02
167	SLU 23	2235	3	5807	-0.41	48.77	0.08
167	SLU 24	2348	0	6088	-0.14	51.36	0.02
167	SLU 25	2321	2	6023	-0.3	50.71	0.06
167	SLU 26	2274	3	5907	-0.41	49.62	0.08
167	SLU 27	2387	0	6188	-0.14	52.21	0.02
167	SLU 28	2360	1	6124	-0.3	51.56	0.06
167	SLU 29	2358	0	6115	-0.14	51.55	0.02
167	SLU 30	2331	1	6051	-0.3	50.9	0.06
167	SLU 31	2617	3	6761	-0.43	57.48	0.08
167	SLU 32	2731	0	7042	-0.16	60.07	0.03
167	SLU 33	2704	2	6978	-0.32	59.42	0.06
167	SLU 34	2656	3	6862	-0.43	58.33	0.08
167	SLU 35	2770	0	7143	-0.16	60.92	0.03
167	SLU 36	2742	2	7078	-0.32	60.27	0.06
167	SLU 37	2740	0	7070	-0.16	60.26	0.03
167	SLU 38	2713	2	7005	-0.32	59.61	0.06
167	SLU 39	2827	0	7278	-0.16	62.29	0.03
167	SLU 40	2799	2	7213	-0.33	61.64	0.06
167	SLU 41	2865	0	7378	-0.16	63.14	0.03
167	SLU 42	2838	2	7314	-0.33	62.49	0.06
167	SLU 43	2392	0	6256	-0.15	51.83	0.03
167	SLU 44	2347	3	6149	-0.42	50.75	0.08
167	SLU 45	2460	0	6430	-0.15	53.34	0.03
167	SLU 46	2433	1	6365	-0.31	52.69	0.06
167	SLU 47	2386	3	6249	-0.42	51.6	0.08
167	SLU 48	2499	0	6530	-0.15	54.19	0.03
167	SLU 49	2472	1	6466	-0.31	53.54	0.06
167	SLU 50	2470	0	6458	-0.15	53.52	0.03
167	SLU 51	2443	1	6393	-0.31	52.88	0.06
167	SLU 52	2729	3	7103	-0.44	59.46	0.08
167	SLU 53	2843	0	7384	-0.17	62.05	0.03
167	SLU 54	2816	2	7320	-0.33	61.4	0.06

Nodo	Cont.	Reazione a traslazione			Reazione a rotazione		
Ind.	N.br.	x	y	z	x	y	z
167	SLU 55	2768	3	7204	-0.44	60.31	0.08
167	SLU 56	2882	0	7485	-0.17	62.9	0.03
167	SLU 57	2854	1	7420	-0.33	62.25	0.06
167	SLU 58	2852	0	7412	-0.17	62.23	0.03
167	SLU 59	2825	1	7347	-0.33	61.59	0.06
167	SLU 60	2939	0	7620	-0.18	64.27	0.03
167	SLU 61	2911	2	7555	-0.34	63.62	0.06
167	SLU 62	2977	0	7720	-0.18	65.12	0.03
167	SLU 63	2950	2	7656	-0.34	64.47	0.06
167	SLU 64	2740	0	7128	-0.17	59.73	0.03
167	SLU 65	2695	3	7021	-0.44	58.64	0.08
167	SLU 66	2808	0	7302	-0.17	61.24	0.03
167	SLU 67	2781	1	7237	-0.33	60.59	0.06
167	SLU 68	2734	3	7121	-0.44	59.49	0.08
167	SLU 69	2847	0	7402	-0.17	62.09	0.03
167	SLU 70	2820	1	7338	-0.33	61.44	0.06
167	SLU 71	2818	0	7329	-0.17	61.42	0.03
167	SLU 72	2791	1	7265	-0.33	60.77	0.06
167	SLU 73	3078	3	7975	-0.46	67.35	0.08
167	SLU 74	3191	0	8256	-0.19	69.95	0.03
167	SLU 75	3164	2	8191	-0.35	69.3	0.06
167	SLU 76	3116	3	8076	-0.46	68.2	0.08
167	SLU 77	3230	0	8357	-0.19	70.8	0.03
167	SLU 78	3203	2	8292	-0.35	70.15	0.06
167	SLU 79	3201	0	8284	-0.19	70.13	0.03
167	SLU 80	3173	1	8219	-0.35	69.48	0.06
167	SLU 81	3287	0	8492	-0.19	72.17	0.03
167	SLU 82	3260	2	8427	-0.36	71.52	0.07
167	SLU 83	3326	0	8592	-0.19	73.02	0.03
167	SLU 84	3298	2	8528	-0.36	72.37	0.06
167	SLE RA 1	2031	0	5292	-0.13	44.21	0.02
167	SLE RA 2	2001	2	5220	-0.31	43.49	0.06
167	SLE RA 3	2077	0	5407	-0.13	45.22	0.02
167	SLE RA 4	2059	1	5364	-0.23	44.78	0.04
167	SLE RA 5	2027	2	5287	-0.31	44.05	0.06
167	SLE RA 6	2103	0	5474	-0.13	45.78	0.02
167	SLE RA 7	2085	1	5431	-0.23	45.35	0.04
167	SLE RA 8	2083	0	5426	-0.12	45.34	0.02
167	SLE RA 9	2065	1	5383	-0.23	44.91	0.04
167	SLE RA 10	2256	2	5856	-0.32	49.29	0.06
167	SLE RA 11	2332	0	6043	-0.14	51.02	0.02
167	SLE RA 12	2314	1	6000	-0.25	50.59	0.04
167	SLE RA 13	2282	2	5923	-0.32	49.86	0.06
167	SLE RA 14	2358	0	6111	-0.14	51.59	0.02
167	SLE RA 15	2340	1	6067	-0.25	51.16	0.04
167	SLE RA 16	2338	0	6062	-0.14	51.15	0.02
167	SLE RA 17	2320	1	6019	-0.25	50.71	0.04
167	SLE RA 18	2396	0	6201	-0.14	52.5	0.02
167	SLE RA 19	2378	1	6158	-0.25	52.07	0.05
167	SLE RA 20	2422	0	6268	-0.14	53.07	0.02
167	SLE RA 21	2404	1	6225	-0.25	52.64	0.05
167	SLE FR 1	2031	0	5292	-0.13	44.21	0.02
167	SLE FR 2	2025	0	5277	-0.16	44.06	0.03
167	SLE FR 3	2042	0	5318	-0.13	44.43	0.02
167	SLE FR 4	2135	0	5550	-0.17	46.55	0.03
167	SLE FR 5	2151	0	5591	-0.13	46.92	0.02
167	SLE FR 6	2214	0	5746	-0.13	48.35	0.02
167	SLE QP 1	2031	0	5292	-0.13	44.21	0.02
167	SLE QP 2	2141	0	5564	-0.13	46.7	0.02
167	SLD 1	3469	-31	8654	3.2	79.12	-0.64
167	SLD 2	3469	-31	8654	3.2	79.12	-0.64
167	SLD 3	3568	14	8882	-1.63	81.59	0.33
167	SLD 4	3568	14	8882	-1.63	81.59	0.33
167	SLD 5	2388	-77	6145	8.2	52.68	-1.65
167	SLD 6	2388	-77	6145	8.2	52.68	-1.65
167	SLD 7	2720	72	6906	-7.91	60.91	1.59
167	SLD 8	2720	72	6906	-7.91	60.91	1.59
167	SLD 9	1561	-72	4222	7.65	32.48	-1.55
167	SLD 10	1561	-72	4222	7.65	32.48	-1.55
167	SLD 11	1894	77	4984	-8.46	40.72	1.7
167	SLD 12	1894	77	4984	-8.46	40.72	1.7
167	SLD 13	713	-14	2246	1.37	11.8	-0.29
167	SLD 14	713	-14	2246	1.37	11.8	-0.29
167	SLD 15	813	31	2475	-3.46	14.27	0.68
167	SLD 16	813	31	2475	-3.46	14.27	0.68
167	SLV 1	5155	-79	12580	8.27	120.26	-1.66
167	SLV 2	5155	-79	12580	8.27	120.26	-1.66
167	SLV 3	5393	35	13125	-3.96	126.15	0.82
167	SLV 4	5393	35	13125	-3.96	126.15	0.82
167	SLV 5	2684	-198	6843	20.94	59.84	-4.23
167	SLV 6	2684	-198	6843	20.94	59.84	-4.23
167	SLV 7	3477	185	8659	-19.83	79.45	4.01
167	SLV 8	3477	185	8659	-19.83	79.45	4.01
167	SLV 9	805	-185	2470	19.57	13.94	-3.97
167	SLV 10	805	-185	2470	19.57	13.94	-3.97
167	SLV 11	1597	198	4286	-21.2	33.55	4.28
167	SLV 12	1597	198	4286	-21.2	33.55	4.28
167	SLV 13	-1111	-35	-1997	3.7	-32.75	-0.77
167	SLV 14	-1111	-35	-1997	3.7	-32.75	-0.77
167	SLV 15	-874	79	-1452	-8.53	-26.87	1.7
167	SLV 16	-874	79	-1452	-8.53	-26.87	1.7

Nodo	Cont.	Reazione a traslazione			Reazione a rotazione		
Ind.	N.br.	x	y	z	x	y	z
168	SLU 1	858	0	6606	-0.27	71.04	-0.01
168	SLU 2	835	1	6492	0.02	69.04	-0.1
168	SLU 3	888	0	6820	-0.27	73.65	-0.01
168	SLU 4	874	0	6751	-0.11	72.45	-0.06
168	SLU 5	852	1	6621	0.01	70.48	-0.1
168	SLU 6	905	0	6949	-0.28	75.09	-0.01
168	SLU 7	891	0	6880	-0.11	73.89	-0.06
168	SLU 8	892	0	6864	-0.28	73.92	-0.01
168	SLU 9	878	0	6796	-0.11	72.72	-0.06
168	SLU 10	1022	1	7645	-0.02	84.51	-0.1
168	SLU 11	1075	0	7973	-0.31	89.12	-0.01
168	SLU 12	1061	1	7904	-0.14	87.92	-0.06
168	SLU 13	1039	1	7774	-0.02	85.95	-0.1
168	SLU 14	1092	0	8102	-0.31	90.56	-0.01
168	SLU 15	1078	1	8033	-0.15	89.36	-0.06
168	SLU 16	1079	0	8018	-0.31	89.39	-0.01
168	SLU 17	1065	1	7949	-0.14	88.19	-0.06
168	SLU 18	1125	0	8254	-0.32	93.14	-0.01
168	SLU 19	1111	1	8185	-0.15	91.94	-0.06
168	SLU 20	1142	0	8383	-0.32	94.58	-0.01
168	SLU 21	1128	1	8314	-0.15	93.38	-0.06
168	SLU 22	1026	0	7664	-0.3	85.01	-0.01
168	SLU 23	1003	1	7549	-0.02	83	-0.1
168	SLU 24	1056	0	7877	-0.31	87.62	-0.01
168	SLU 25	1042	1	7808	-0.14	86.41	-0.06
168	SLU 26	1020	1	7678	-0.02	84.44	-0.1
168	SLU 27	1073	0	8006	-0.31	89.05	-0.01
168	SLU 28	1059	1	7937	-0.14	87.85	-0.06
168	SLU 29	1060	0	7922	-0.31	87.89	-0.01
168	SLU 30	1046	1	7853	-0.14	86.68	-0.06
168	SLU 31	1190	1	8702	-0.05	98.47	-0.1
168	SLU 32	1243	1	9030	-0.34	103.08	-0.01
168	SLU 33	1229	1	8962	-0.17	101.88	-0.06
168	SLU 34	1207	1	8832	-0.06	99.91	-0.1
168	SLU 35	1260	1	9160	-0.35	104.52	-0.01
168	SLU 36	1246	1	9091	-0.18	103.32	-0.06
168	SLU 37	1247	1	9075	-0.35	103.35	-0.01
168	SLU 38	1233	1	9007	-0.18	102.15	-0.06
168	SLU 39	1293	1	9311	-0.35	107.1	-0.01
168	SLU 40	1279	1	9243	-0.18	105.9	-0.07
168	SLU 41	1310	1	9440	-0.36	108.54	-0.01
168	SLU 42	1296	1	9372	-0.19	107.34	-0.06
168	SLU 43	1058	1	8225	-0.34	87.57	-0.01
168	SLU 44	1035	1	8111	-0.05	85.56	-0.1
168	SLU 45	1088	1	8439	-0.34	90.18	-0.01
168	SLU 46	1074	1	8370	-0.17	88.97	-0.06
168	SLU 47	1052	1	8240	-0.06	87	-0.1
168	SLU 48	1105	1	8568	-0.35	91.62	-0.01
168	SLU 49	1091	1	8499	-0.18	90.41	-0.06
168	SLU 50	1092	1	8484	-0.35	90.45	-0.01
168	SLU 51	1078	1	8415	-0.18	89.25	-0.06
168	SLU 52	1222	1	9264	-0.09	101.03	-0.1
168	SLU 53	1275	1	9592	-0.38	105.65	-0.01
168	SLU 54	1261	1	9524	-0.21	104.44	-0.06
168	SLU 55	1239	1	9393	-0.09	102.47	-0.1
168	SLU 56	1292	1	9721	-0.38	107.09	-0.01
168	SLU 57	1278	1	9653	-0.21	105.88	-0.06
168	SLU 58	1279	1	9637	-0.38	105.92	-0.01
168	SLU 59	1265	1	9568	-0.21	104.71	-0.06
168	SLU 60	1325	1	9873	-0.39	109.67	-0.01
168	SLU 61	1311	1	9804	-0.22	108.46	-0.07
168	SLU 62	1342	1	10002	-0.39	111.11	-0.01
168	SLU 63	1328	1	9934	-0.22	109.9	-0.07
168	SLU 64	1226	1	9283	-0.37	101.53	-0.01
168	SLU 65	1202	1	9168	-0.09	99.53	-0.1
168	SLU 66	1255	1	9496	-0.38	104.14	-0.01
168	SLU 67	1242	1	9428	-0.21	102.94	-0.06
168	SLU 68	1220	1	9297	-0.09	100.97	-0.1
168	SLU 69	1273	1	9625	-0.38	105.58	-0.01
168	SLU 70	1259	1	9557	-0.21	104.38	-0.06
168	SLU 71	1260	1	9541	-0.38	104.41	-0.01
168	SLU 72	1246	1	9472	-0.21	103.21	-0.06
168	SLU 73	1389	1	10322	-0.12	114.99	-0.1
168	SLU 74	1442	1	10650	-0.41	119.61	-0.01
168	SLU 75	1429	1	10581	-0.24	118.41	-0.07
168	SLU 76	1407	1	10451	-0.13	116.43	-0.1
168	SLU 77	1460	1	10779	-0.42	121.05	-0.01
168	SLU 78	1446	1	10710	-0.25	119.84	-0.07
168	SLU 79	1447	1	10695	-0.41	119.88	-0.01
168	SLU 80	1433	1	10626	-0.24	118.68	-0.07
168	SLU 81	1493	1	10931	-0.42	123.63	-0.01
168	SLU 82	1479	1	10862	-0.25	122.43	-0.07
168	SLU 83	1510	1	11060	-0.42	125.07	-0.01
168	SLU 84	1496	1	10991	-0.25	123.87	-0.07
168	SLE RA 1	906	0	6908	-0.28	75.03	-0.01
168	SLE RA 2	891	0	6832	-0.09	73.7	-0.07
168	SLE RA 3	926	0	7051	-0.28	76.77	-0.01
168	SLE RA 4	917	0	7005	-0.17	75.97	-0.04
168	SLE RA 5	902	0	6918	-0.09	74.66	-0.07
168	SLE RA 6	937	0	7137	-0.28	77.73	-0.01
168	SLE RA 7	928	0	7091	-0.17	76.93	-0.04

Nodo	Cont.	Reazione a traslazione			Reazione a rotazione		
Ind.	N.br.	x	y	z	x	y	z
168	SLE RA 8	929	0	7080	-0.28	76.95	-0.01
168	SLE RA 9	919	0	7035	-0.17	76.15	-0.04
168	SLE RA 10	1015	1	7601	-0.11	84.01	-0.07
168	SLE RA 11	1050	0	7819	-0.3	87.08	-0.01
168	SLE RA 12	1041	1	7774	-0.19	86.28	-0.04
168	SLE RA 13	1027	1	7687	-0.11	84.97	-0.07
168	SLE RA 14	1062	0	7906	-0.31	88.04	-0.01
168	SLE RA 15	1053	1	7860	-0.2	87.24	-0.04
168	SLE RA 16	1053	0	7849	-0.31	87.27	-0.01
168	SLE RA 17	1044	1	7804	-0.19	86.46	-0.04
168	SLE RA 18	1084	0	8007	-0.31	89.77	-0.01
168	SLE RA 19	1075	1	7961	-0.2	88.96	-0.05
168	SLE RA 20	1095	0	8093	-0.31	90.73	-0.01
168	SLE RA 21	1086	1	8047	-0.2	89.92	-0.05
168	SLE FR 1	906	0	6908	-0.28	75.03	-0.01
168	SLE FR 2	903	0	6893	-0.24	74.77	-0.02
168	SLE FR 3	910	0	6943	-0.28	75.42	-0.01
168	SLE FR 4	956	0	7223	-0.25	79.19	-0.02
168	SLE FR 5	964	0	7272	-0.29	79.84	-0.01
168	SLE FR 6	995	0	7457	-0.29	82.4	-0.01
168	SLE QP 1	906	0	6908	-0.28	75.03	-0.01
168	SLE QP 2	959	0	7238	-0.29	79.45	-0.01
168	SLD 1	1540	-6	10046	-1.9	139.76	1.1
168	SLD 2	1540	-6	10046	-1.9	139.76	1.1
168	SLD 3	1586	1	10247	6.13	144.42	-0.52
168	SLD 4	1586	1	10247	6.13	144.42	-0.52
168	SLD 5	1063	-12	7774	-12.96	90.47	2.78
168	SLD 6	1063	-12	7774	-12.96	90.47	2.78
168	SLD 7	1218	11	8447	13.83	106.02	-2.62
168	SLD 8	1218	11	8447	13.83	106.02	-2.62
168	SLD 9	700	-10	6029	-14.4	52.89	2.6
168	SLD 10	700	-10	6029	-14.4	52.89	2.6
168	SLD 11	856	13	6701	12.39	68.44	-2.8
168	SLD 12	856	13	6701	12.39	68.44	-2.8
168	SLD 13	332	0	4228	-6.71	14.48	0.5
168	SLD 14	332	0	4228	-6.71	14.48	0.5
168	SLD 15	379	7	4430	1.33	19.15	-1.12
168	SLD 16	379	7	4430	1.33	19.15	-1.12
168	SLV 1	2275	-15	13625	-4.32	216.21	2.83
168	SLV 2	2275	-15	13625	-4.32	216.21	2.83
168	SLV 3	2386	2	14109	15.88	227.31	-1.32
168	SLV 4	2386	2	14109	15.88	227.31	-1.32
168	SLV 5	1185	-29	8421	-32.14	103.65	7.13
168	SLV 6	1185	-29	8421	-32.14	103.65	7.13
168	SLV 7	1556	26	10032	35.21	140.65	-6.68
168	SLV 8	1556	26	10032	35.21	140.65	-6.68
168	SLV 9	362	-25	4443	-35.78	18.26	6.67
168	SLV 10	362	-25	4443	-35.78	18.26	6.67
168	SLV 11	734	30	6055	31.57	55.26	-7.14
168	SLV 12	734	30	6055	31.57	55.26	-7.14
168	SLV 13	-467	-1	367	-16.46	-68.4	1.3
168	SLV 14	-467	-1	367	-16.46	-68.4	1.3
168	SLV 15	-356	16	850	3.75	-57.3	-2.84
168	SLV 16	-356	16	850	3.75	-57.3	-2.84
169	SLU 1	1041	0	6235	-0.23	45.8	0
169	SLU 2	1004	0	6139	0.64	44.2	0
169	SLU 3	1081	0	6429	-0.24	47.58	0
169	SLU 4	1059	0	6372	0.28	46.63	0
169	SLU 5	1025	0	6260	0.63	45.14	0
169	SLU 6	1102	0	6551	-0.24	48.52	0
169	SLU 7	1080	0	6493	0.27	47.57	0
169	SLU 8	1083	0	6477	-0.24	47.68	0
169	SLU 9	1061	0	6420	0.28	46.72	0
169	SLU 10	1259	0	7199	0.61	55.2	0
169	SLU 11	1336	0	7489	-0.26	58.59	0
169	SLU 12	1314	0	7432	0.26	57.63	0
169	SLU 13	1280	0	7320	0.6	56.15	0
169	SLU 14	1357	0	7610	-0.27	59.53	0
169	SLU 15	1335	0	7553	0.25	58.57	0
169	SLU 16	1338	0	7537	-0.27	58.68	0
169	SLU 17	1316	0	7479	0.25	57.72	0
169	SLU 18	1405	0	7749	-0.26	61.52	0
169	SLU 19	1383	0	7691	0.26	60.56	0
169	SLU 20	1426	0	7870	-0.27	62.46	0
169	SLU 21	1404	0	7812	0.25	61.5	0
169	SLU 22	1269	0	7206	-0.25	55.67	0
169	SLU 23	1232	0	7110	0.61	54.08	0
169	SLU 24	1309	0	7400	-0.26	57.46	0
169	SLU 25	1287	0	7343	0.26	56.5	0
169	SLU 26	1253	0	7231	0.6	55.02	0
169	SLU 27	1331	0	7521	-0.27	58.4	0
169	SLU 28	1308	0	7464	0.25	57.44	0
169	SLU 29	1311	0	7448	-0.27	57.55	0
169	SLU 30	1289	0	7391	0.25	56.6	0
169	SLU 31	1487	0	8170	0.59	65.08	0
169	SLU 32	1564	0	8460	-0.29	68.46	0
169	SLU 33	1542	0	8402	0.23	67.51	0
169	SLU 34	1508	0	8291	0.58	66.02	0
169	SLU 35	1586	0	8581	-0.29	69.4	0
169	SLU 36	1563	0	8523	0.22	68.45	0
169	SLU 37	1566	0	8508	-0.29	68.56	0

Nodo	Cont.	Reazione a traslazione			Reazione a rotazione		
Ind.	N.br.	x	y	z	x	y	z
169	SLU 38	1544	0	8450	0.23	67.6	0
169	SLU 39	1633	0	8719	-0.29	71.39	0
169	SLU 40	1611	0	8662	0.23	70.43	0
169	SLU 41	1654	0	8841	-0.3	72.33	0
169	SLU 42	1632	0	8783	0.22	71.38	0
169	SLU 43	1275	0	7773	-0.29	56.15	0
169	SLU 44	1238	0	7677	0.58	54.55	0
169	SLU 45	1315	0	7967	-0.3	57.94	0
169	SLU 46	1293	0	7910	0.22	56.98	0
169	SLU 47	1259	0	7798	0.57	55.49	0
169	SLU 48	1336	0	8088	-0.3	58.88	0
169	SLU 49	1314	0	8031	0.21	57.92	0
169	SLU 50	1317	0	8015	-0.3	58.03	0
169	SLU 51	1295	0	7957	0.22	57.07	0
169	SLU 52	1493	0	8737	0.55	65.56	0
169	SLU 53	1570	0	9027	-0.32	68.94	0
169	SLU 54	1548	0	8969	0.2	67.98	0
169	SLU 55	1514	0	8858	0.54	66.5	0
169	SLU 56	1591	0	9148	-0.33	69.88	0
169	SLU 57	1569	0	9090	0.19	68.92	0
169	SLU 58	1572	0	9075	-0.33	69.03	0
169	SLU 59	1550	0	9017	0.19	68.08	0
169	SLU 60	1639	0	9286	-0.32	71.87	0
169	SLU 61	1617	0	9229	0.2	70.91	0
169	SLU 62	1660	0	9408	-0.33	72.81	0
169	SLU 63	1638	0	9350	0.19	71.85	0
169	SLU 64	1503	0	8743	-0.31	66.02	0
169	SLU 65	1466	0	8648	0.55	64.43	0
169	SLU 66	1543	0	8938	-0.32	67.81	0
169	SLU 67	1521	0	8880	0.2	66.85	0
169	SLU 68	1487	0	8769	0.54	65.37	0
169	SLU 69	1565	0	9059	-0.33	68.75	0
169	SLU 70	1542	0	9002	0.19	67.79	0
169	SLU 71	1545	0	8986	-0.33	67.91	0
169	SLU 72	1523	0	8928	0.19	66.95	0
169	SLU 73	1721	0	9707	0.53	75.43	0
169	SLU 74	1798	0	9997	-0.35	78.82	0
169	SLU 75	1776	0	9940	0.17	77.86	0
169	SLU 76	1742	0	9828	0.52	76.37	0
169	SLU 77	1820	0	10119	-0.35	79.76	0
169	SLU 78	1797	0	10061	0.16	78.8	0
169	SLU 79	1800	0	10045	-0.35	78.91	0
169	SLU 80	1778	0	9988	0.17	77.95	0
169	SLU 81	1867	0	10257	-0.35	81.74	0
169	SLU 82	1845	0	10200	0.17	80.79	0
169	SLU 83	1888	0	10378	-0.36	82.69	0
169	SLU 84	1866	0	10321	0.16	81.73	0
169	SLE RA 1	1106	0	6512	-0.23	48.62	0
169	SLE RA 2	1081	0	6449	0.34	47.55	0
169	SLE RA 3	1133	0	6642	-0.24	49.81	0
169	SLE RA 4	1118	0	6604	0.1	49.17	0
169	SLE RA 5	1095	0	6529	0.34	48.18	0
169	SLE RA 6	1147	0	6723	-0.25	50.44	0
169	SLE RA 7	1132	0	6684	0.1	49.8	0
169	SLE RA 8	1134	0	6674	-0.25	49.87	0
169	SLE RA 9	1119	0	6636	0.1	49.23	0
169	SLE RA 10	1251	0	7155	0.33	54.89	0
169	SLE RA 11	1303	0	7348	-0.26	57.15	0
169	SLE RA 12	1288	0	7310	0.09	56.51	0
169	SLE RA 13	1265	0	7236	0.32	55.52	0
169	SLE RA 14	1317	0	7429	-0.26	57.77	0
169	SLE RA 15	1302	0	7391	0.08	57.13	0
169	SLE RA 16	1304	0	7380	-0.26	57.21	0
169	SLE RA 17	1289	0	7342	0.08	56.57	0
169	SLE RA 18	1349	0	7522	-0.26	59.1	0
169	SLE RA 19	1334	0	7483	0.09	58.46	0
169	SLE RA 20	1363	0	7602	-0.26	59.72	0
169	SLE RA 21	1348	0	7564	0.08	59.09	0
169	SLE FR 1	1106	0	6512	-0.23	48.62	0
169	SLE FR 2	1101	0	6500	-0.12	48.4	0
169	SLE FR 3	1112	0	6545	-0.24	48.87	0
169	SLE FR 4	1174	0	6802	-0.13	51.55	0
169	SLE FR 5	1184	0	6847	-0.24	52.01	0
169	SLE FR 6	1227	0	7017	-0.25	53.86	0
169	SLE QP 1	1106	0	6512	-0.23	48.62	0
169	SLE QP 2	1179	0	6815	-0.24	51.76	0
169	SLD 1	2326	5	8708	-13.61	102.41	-0.12
169	SLD 2	2326	5	8708	-13.61	102.41	-0.12
169	SLD 3	2417	-13	8843	4.88	106.38	0.05
169	SLD 4	2417	-13	8843	4.88	106.38	0.05
169	SLD 5	1386	28	7178	-32.29	60.94	-0.3
169	SLD 6	1386	28	7178	-32.29	60.94	-0.3
169	SLD 7	1688	-30	7629	29.33	74.16	0.28
169	SLD 8	1688	-30	7629	29.33	74.16	0.28
169	SLD 9	670	30	6002	-29.81	29.36	-0.27
169	SLD 10	670	30	6002	-29.81	29.36	-0.27
169	SLD 11	972	-27	6452	31.8	42.59	0.3
169	SLD 12	972	-27	6452	31.8	42.59	0.3
169	SLD 13	-59	13	4787	-5.36	-2.85	-0.05
169	SLD 14	-59	13	4787	-5.36	-2.85	-0.05
169	SLD 15	31	-4	4922	13.13	1.12	0.13

Nodo	Cont.	Reazione a traslazione			Reazione a rotazione		
Ind.	N.br.	x	y	z	x	y	z
169	SLD 16	31	-4	4922	13.13	1.12	0.13
169	SLV 1	3780	12	11128	-34.4	166.58	-0.31
169	SLV 2	3780	12	11128	-34.4	166.58	-0.31
169	SLV 3	3995	-33	11455	12.83	176.01	0.12
169	SLV 4	3995	-33	11455	12.83	176.01	0.12
169	SLV 5	1632	71	7614	-82.12	71.9	-0.75
169	SLV 6	1632	71	7614	-82.12	71.9	-0.75
169	SLV 7	2351	-77	8703	75.31	103.34	0.7
169	SLV 8	2351	-77	8703	75.31	103.34	0.7
169	SLV 9	7	77	4928	-75.8	0.18	-0.7
169	SLV 10	7	77	4928	-75.8	0.18	-0.7
169	SLV 11	725	-70	6017	81.64	31.62	0.76
169	SLV 12	725	-70	6017	81.64	31.62	0.76
169	SLV 13	-1638	33	2175	-13.32	-72.49	-0.12
169	SLV 14	-1638	33	2175	-13.32	-72.49	-0.12
169	SLV 15	-1423	-11	2502	33.91	-63.06	0.32
169	SLV 16	-1423	-11	2502	33.91	-63.06	0.32
170	SLU 1	982	0	5976	-0.14	42.59	0
170	SLU 2	943	-1	5891	1.08	40.84	0
170	SLU 3	1022	0	6157	-0.15	44.34	0
170	SLU 4	998	0	6106	0.59	43.29	0
170	SLU 5	964	-1	6006	1.08	41.72	0
170	SLU 6	1042	0	6273	-0.16	45.23	0
170	SLU 7	1019	0	6222	0.58	44.18	0
170	SLU 8	1023	0	6207	-0.16	44.36	0
170	SLU 9	999	0	6156	0.58	43.31	0
170	SLU 10	1196	-1	6899	1.07	51.77	0
170	SLU 11	1274	0	7166	-0.16	55.27	0
170	SLU 12	1251	0	7115	0.58	54.22	0
170	SLU 13	1216	-1	7015	1.07	52.65	0
170	SLU 14	1294	0	7281	-0.17	56.16	0
170	SLU 15	1271	0	7230	0.57	55.11	0
170	SLU 16	1275	0	7215	-0.17	55.29	0
170	SLU 17	1252	0	7164	0.57	54.24	0
170	SLU 18	1342	0	7417	-0.15	58.21	0
170	SLU 19	1319	0	7366	0.58	57.15	0
170	SLU 20	1363	0	7532	-0.16	59.09	0
170	SLU 21	1340	0	7481	0.57	58.04	0
170	SLU 22	1207	0	6898	-0.15	52.38	0
170	SLU 23	1169	-1	6812	1.07	50.62	0
170	SLU 24	1247	0	7079	-0.16	54.13	0
170	SLU 25	1224	0	7028	0.58	53.08	0
170	SLU 26	1189	-1	6928	1.06	51.51	0
170	SLU 27	1267	0	7194	-0.17	55.01	0
170	SLU 28	1244	0	7143	0.57	53.96	0
170	SLU 29	1248	0	7128	-0.17	54.15	0
170	SLU 30	1225	0	7077	0.57	53.1	0
170	SLU 31	1421	-1	7821	1.06	61.55	0
170	SLU 32	1499	0	8087	-0.17	65.06	0
170	SLU 33	1476	0	8036	0.57	64	0
170	SLU 34	1441	-1	7936	1.06	62.44	0
170	SLU 35	1520	0	8203	-0.18	65.94	0
170	SLU 36	1496	0	8152	0.56	64.89	0
170	SLU 37	1500	0	8137	-0.18	65.08	0
170	SLU 38	1477	0	8086	0.56	64.02	0
170	SLU 39	1568	0	8338	-0.16	67.99	0
170	SLU 40	1545	0	8287	0.57	66.94	0
170	SLU 41	1588	0	8454	-0.17	68.88	0
170	SLU 42	1565	0	8402	0.56	67.82	0
170	SLU 43	1199	0	7453	-0.18	52.02	0
170	SLU 44	1161	-1	7368	1.04	50.26	0
170	SLU 45	1239	0	7634	-0.19	53.77	0
170	SLU 46	1216	0	7583	0.55	52.72	0
170	SLU 47	1181	-1	7483	1.04	51.15	0
170	SLU 48	1259	0	7750	-0.2	54.65	0
170	SLU 49	1236	0	7699	0.54	53.6	0
170	SLU 50	1240	0	7684	-0.2	53.79	0
170	SLU 51	1217	0	7633	0.54	52.74	0
170	SLU 52	1413	-1	8376	1.04	61.19	0
170	SLU 53	1491	0	8643	-0.2	64.7	0
170	SLU 54	1468	0	8592	0.54	63.65	0
170	SLU 55	1433	-1	8492	1.03	62.08	0
170	SLU 56	1512	0	8758	-0.2	65.58	0
170	SLU 57	1488	0	8707	0.53	64.53	0
170	SLU 58	1492	0	8692	-0.2	64.72	0
170	SLU 59	1469	0	8641	0.53	63.67	0
170	SLU 60	1560	0	8894	-0.19	67.63	0
170	SLU 61	1537	0	8842	0.54	66.58	0
170	SLU 62	1580	0	9009	-0.2	68.52	0
170	SLU 63	1557	0	8958	0.53	67.46	0
170	SLU 64	1425	0	8374	-0.19	61.8	0
170	SLU 65	1386	-1	8289	1.03	60.05	0
170	SLU 66	1464	0	8556	-0.2	63.55	0
170	SLU 67	1441	0	8505	0.54	62.5	0
170	SLU 68	1406	-1	8405	1.03	60.93	0
170	SLU 69	1485	0	8671	-0.21	64.44	0
170	SLU 70	1461	0	8620	0.53	63.38	0
170	SLU 71	1465	0	8605	-0.21	63.57	0
170	SLU 72	1442	0	8554	0.53	62.52	0
170	SLU 73	1638	-1	9298	1.03	70.98	0
170	SLU 74	1717	0	9564	-0.21	74.48	0

Nodo	Cont.	Reazione a traslazione			Reazione a rotazione		
Ind.	N.br.	x	y	z	x	y	z
170	SLU 75	1693	0	9513	0.53	73.43	0
170	SLU 76	1659	-1	9413	1.02	71.86	0
170	SLU 77	1737	0	9680	-0.21	75.37	0
170	SLU 78	1714	0	9629	0.52	74.31	0
170	SLU 79	1718	0	9614	-0.21	74.5	0
170	SLU 80	1694	0	9563	0.52	73.45	0
170	SLU 81	1785	0	9815	-0.2	77.41	0
170	SLU 82	1762	0	9764	0.53	76.36	0
170	SLU 83	1805	0	9930	-0.21	78.3	0
170	SLU 84	1782	0	9879	0.52	77.25	0
170	SLE RA 1	1046	0	6239	-0.14	45.39	0
170	SLE RA 2	1021	0	6183	0.67	44.22	0
170	SLE RA 3	1073	0	6360	-0.15	46.56	0
170	SLE RA 4	1057	0	6326	0.34	45.85	0
170	SLE RA 5	1034	0	6260	0.67	44.81	0
170	SLE RA 6	1086	0	6437	-0.15	47.15	0
170	SLE RA 7	1071	0	6403	0.34	46.44	0
170	SLE RA 8	1074	0	6393	-0.15	46.57	0
170	SLE RA 9	1058	0	6359	0.33	45.87	0
170	SLE RA 10	1189	0	6855	0.67	51.51	0
170	SLE RA 11	1241	0	7033	-0.15	53.84	0
170	SLE RA 12	1225	0	6998	0.34	53.14	0
170	SLE RA 13	1202	0	6932	0.66	52.1	0
170	SLE RA 14	1255	0	7109	-0.16	54.43	0
170	SLE RA 15	1239	0	7075	0.33	53.73	0
170	SLE RA 16	1242	0	7065	-0.16	53.86	0
170	SLE RA 17	1226	0	7031	0.33	53.15	0
170	SLE RA 18	1287	0	7200	-0.15	55.8	0
170	SLE RA 19	1271	0	7166	0.34	55.1	0
170	SLE RA 20	1300	0	7277	-0.16	56.39	0
170	SLE RA 21	1285	0	7243	0.33	55.69	0
170	SLE FR 1	1046	0	6239	-0.14	45.39	0
170	SLE FR 2	1041	0	6228	0.02	45.16	0
170	SLE FR 3	1052	0	6270	-0.15	45.63	0
170	SLE FR 4	1113	0	6516	0.02	48.28	0
170	SLE FR 5	1124	0	6558	-0.15	48.75	0
170	SLE FR 6	1167	0	6720	-0.15	50.59	0
170	SLE QP 1	1046	0	6239	-0.14	45.39	0
170	SLE QP 2	1118	0	6528	-0.15	48.51	0
170	SLD 1	2332	18	7813	-19.21	105.64	-0.03
170	SLD 2	2332	18	7813	-19.21	105.64	-0.03
170	SLD 3	2429	-7	7908	8.07	110.14	0.11
170	SLD 4	2429	-7	7908	8.07	110.14	0.11
170	SLD 5	1337	44	6769	-47.25	58.82	-0.23
170	SLD 6	1337	44	6769	-47.25	58.82	-0.23
170	SLD 7	1657	-41	7086	43.71	73.83	0.25
170	SLD 8	1657	-41	7086	43.71	73.83	0.25
170	SLD 9	580	41	5969	-44	23.19	-0.25
170	SLD 10	580	41	5969	-44	23.19	-0.25
170	SLD 11	900	-44	6286	46.96	38.21	0.22
170	SLD 12	900	-44	6286	46.96	38.21	0.22
170	SLD 13	-192	8	5147	-8.37	-13.11	-0.11
170	SLD 14	-192	8	5147	-8.37	-13.11	-0.11
170	SLD 15	-95	-18	5242	18.92	-8.61	0.03
170	SLD 16	-95	-18	5242	18.92	-8.61	0.03
170	SLV 1	3870	47	9459	-48.95	178.01	-0.08
170	SLV 2	3870	47	9459	-48.95	178.01	-0.08
170	SLV 3	4099	-19	9693	20.88	188.71	0.28
170	SLV 4	4099	-19	9693	20.88	188.71	0.28
170	SLV 5	1597	113	7053	-120.71	71.13	-0.58
170	SLV 6	1597	113	7053	-120.71	71.13	-0.58
170	SLV 7	2359	-105	7831	112.08	106.8	0.63
170	SLV 8	2359	-105	7831	112.08	106.8	0.63
170	SLV 9	-122	105	5224	-112.37	-9.78	-0.64
170	SLV 10	-122	105	5224	-112.37	-9.78	-0.64
170	SLV 11	640	-113	6002	120.41	25.89	0.57
170	SLV 12	640	-113	6002	120.41	25.89	0.57
170	SLV 13	-1862	19	3362	-21.17	-91.69	-0.28
170	SLV 14	-1862	19	3362	-21.17	-91.69	-0.28
170	SLV 15	-1633	-46	3596	48.66	-80.99	0.08
170	SLV 16	-1633	-46	3596	48.66	-80.99	0.08
171	SLU 1	868	0	5863	-0.05	47.25	-0.02
171	SLU 2	828	-1	5781	1.3	45.06	-0.02
171	SLU 3	905	0	6038	-0.06	49.27	-0.03
171	SLU 4	881	-1	5988	0.75	47.96	-0.02
171	SLU 5	847	-1	5894	1.29	46.06	-0.02
171	SLU 6	923	0	6150	-0.07	50.27	-0.03
171	SLU 7	899	-1	6101	0.75	48.96	-0.02
171	SLU 8	905	0	6088	-0.07	49.24	-0.03
171	SLU 9	881	-1	6039	0.74	47.93	-0.02
171	SLU 10	1066	-1	6771	1.31	57.77	-0.02
171	SLU 11	1142	0	7028	-0.05	61.98	-0.03
171	SLU 12	1118	-1	6979	0.76	60.67	-0.03
171	SLU 13	1084	-1	6884	1.3	58.77	-0.02
171	SLU 14	1161	0	7141	-0.06	62.98	-0.03
171	SLU 15	1137	-1	7091	0.75	61.67	-0.03
171	SLU 16	1142	0	7079	-0.06	61.95	-0.03
171	SLU 17	1118	-1	7030	0.75	60.64	-0.03
171	SLU 18	1208	0	7278	-0.05	65.4	-0.03
171	SLU 19	1184	-1	7229	0.77	64.09	-0.03
171	SLU 20	1226	0	7391	-0.05	66.4	-0.03

Nodo	Cont.	Reazione a traslazione			Reazione a rotazione		
Ind.	N.br.	x	y	z	x	y	z
171	SLU 21	1202	-1	7341	0.76	65.09	-0.03
171	SLU 22	1080	0	6766	-0.05	58.61	-0.03
171	SLU 23	1040	-1	6684	1.3	56.43	-0.02
171	SLU 24	1116	0	6940	-0.06	60.64	-0.03
171	SLU 25	1092	-1	6891	0.76	59.33	-0.03
171	SLU 26	1058	-1	6796	1.3	57.43	-0.02
171	SLU 27	1135	0	7053	-0.06	61.64	-0.03
171	SLU 28	1111	-1	7004	0.75	60.33	-0.03
171	SLU 29	1116	0	6991	-0.07	60.61	-0.03
171	SLU 30	1092	-1	6942	0.75	59.3	-0.03
171	SLU 31	1277	-1	7674	1.31	69.13	-0.03
171	SLU 32	1354	0	7931	-0.05	73.34	-0.03
171	SLU 33	1330	-1	7882	0.76	72.03	-0.03
171	SLU 34	1296	-1	7787	1.3	70.13	-0.03
171	SLU 35	1372	0	8043	-0.06	74.34	-0.03
171	SLU 36	1348	-1	7994	0.75	73.03	-0.03
171	SLU 37	1354	0	7982	-0.06	73.31	-0.03
171	SLU 38	1330	-1	7932	0.75	72	-0.03
171	SLU 39	1419	0	8181	-0.04	76.76	-0.03
171	SLU 40	1395	-1	8131	0.77	75.45	-0.03
171	SLU 41	1437	0	8293	-0.05	77.76	-0.03
171	SLU 42	1414	-1	8244	0.76	76.45	-0.03
171	SLU 43	1056	0	7312	-0.07	57.52	-0.03
171	SLU 44	1016	-1	7230	1.28	55.34	-0.03
171	SLU 45	1093	0	7487	-0.08	59.55	-0.03
171	SLU 46	1069	-1	7438	0.74	58.24	-0.03
171	SLU 47	1034	-1	7343	1.28	56.34	-0.03
171	SLU 48	1111	0	7600	-0.08	60.55	-0.03
171	SLU 49	1087	-1	7550	0.73	59.24	-0.03
171	SLU 50	1093	0	7538	-0.09	59.52	-0.03
171	SLU 51	1069	-1	7488	0.73	58.21	-0.03
171	SLU 52	1254	-1	8221	1.29	68.05	-0.03
171	SLU 53	1330	0	8477	-0.07	72.26	-0.04
171	SLU 54	1306	-1	8428	0.74	70.95	-0.03
171	SLU 55	1272	-1	8333	1.28	69.05	-0.03
171	SLU 56	1348	0	8590	-0.08	73.26	-0.04
171	SLU 57	1324	-1	8541	0.73	71.95	-0.03
171	SLU 58	1330	0	8528	-0.08	72.23	-0.04
171	SLU 59	1306	-1	8479	0.73	70.92	-0.03
171	SLU 60	1396	0	8727	-0.06	75.68	-0.04
171	SLU 61	1372	-1	8678	0.75	74.37	-0.03
171	SLU 62	1414	0	8840	-0.07	76.67	-0.04
171	SLU 63	1390	-1	8791	0.74	75.36	-0.03
171	SLU 64	1268	0	8215	-0.07	68.89	-0.03
171	SLU 65	1228	-1	8133	1.29	66.7	-0.03
171	SLU 66	1304	0	8390	-0.07	70.91	-0.04
171	SLU 67	1280	-1	8341	0.74	69.6	-0.03
171	SLU 68	1246	-1	8246	1.28	67.7	-0.03
171	SLU 69	1322	0	8502	-0.08	71.91	-0.04
171	SLU 70	1298	-1	8453	0.73	70.6	-0.03
171	SLU 71	1304	0	8441	-0.08	70.89	-0.04
171	SLU 72	1280	-1	8391	0.73	69.58	-0.03
171	SLU 73	1465	-1	9123	1.29	79.41	-0.03
171	SLU 74	1542	0	9380	-0.07	83.62	-0.04
171	SLU 75	1518	-1	9331	0.74	82.31	-0.04
171	SLU 76	1484	-1	9236	1.28	80.41	-0.03
171	SLU 77	1560	0	9493	-0.08	84.62	-0.04
171	SLU 78	1536	-1	9444	0.74	83.31	-0.04
171	SLU 79	1542	0	9431	-0.08	83.59	-0.04
171	SLU 80	1518	-1	9382	0.74	82.28	-0.04
171	SLU 81	1607	0	9630	-0.06	87.04	-0.04
171	SLU 82	1583	-1	9581	0.75	85.73	-0.04
171	SLU 83	1625	0	9743	-0.07	88.04	-0.04
171	SLU 84	1601	-1	9693	0.75	86.73	-0.04
171	SLE RA 1	929	0	6121	-0.05	50.49	-0.03
171	SLE RA 2	902	-1	6066	0.85	49.04	-0.02
171	SLE RA 3	953	0	6237	-0.06	51.84	-0.03
171	SLE RA 4	937	0	6204	0.49	50.97	-0.02
171	SLE RA 5	914	-1	6141	0.85	49.7	-0.02
171	SLE RA 6	965	0	6312	-0.06	52.51	-0.03
171	SLE RA 7	949	0	6280	0.48	51.64	-0.02
171	SLE RA 8	953	0	6271	-0.06	51.83	-0.03
171	SLE RA 9	937	0	6238	0.48	50.95	-0.02
171	SLE RA 10	1060	-1	6726	0.85	57.51	-0.03
171	SLE RA 11	1111	0	6898	-0.05	60.31	-0.03
171	SLE RA 12	1095	0	6865	0.49	59.44	-0.03
171	SLE RA 13	1073	-1	6802	0.85	58.17	-0.03
171	SLE RA 14	1124	0	6973	-0.06	60.98	-0.03
171	SLE RA 15	1108	0	6940	0.48	60.11	-0.03
171	SLE RA 16	1111	0	6931	-0.06	60.3	-0.03
171	SLE RA 17	1095	0	6899	0.48	59.42	-0.03
171	SLE RA 18	1155	0	7064	-0.05	62.59	-0.03
171	SLE RA 19	1139	0	7031	0.49	61.72	-0.03
171	SLE RA 20	1167	0	7139	-0.05	63.26	-0.03
171	SLE RA 21	1151	0	7106	0.49	62.39	-0.03
171	SLE FR 1	929	0	6121	-0.05	50.49	-0.03
171	SLE FR 2	923	0	6110	0.13	50.2	-0.03
171	SLE FR 3	934	0	6151	-0.05	50.76	-0.03
171	SLE FR 4	991	0	6393	0.13	53.83	-0.03
171	SLE FR 5	1001	0	6434	-0.05	54.39	-0.03
171	SLE FR 6	1042	0	6592	-0.05	56.54	-0.03

Nodo	Cont.	Reazione a traslazione			Reazione a rotazione		
Ind.	N.br.	x	y	z	x	y	z
171	SLE QP 1	929	0	6121	-0.05	50.49	-0.03
171	SLE QP 2	997	0	6404	-0.05	54.12	-0.03
171	SLD 1	2225	23	7316	-21.85	125.92	0.26
171	SLD 2	2225	23	7316	-21.85	125.92	0.26
171	SLD 3	2323	-10	7392	9.88	131.59	-0.07
171	SLD 4	2323	-10	7392	9.88	131.59	-0.07
171	SLD 5	1216	56	6562	-54.7	67.06	0.56
171	SLD 6	1216	56	6562	-54.7	67.06	0.56
171	SLD 7	1543	-52	6816	51.04	85.96	-0.54
171	SLD 8	1543	-52	6816	51.04	85.96	-0.54
171	SLD 9	450	52	5992	-51.14	22.28	0.48
171	SLD 10	450	52	5992	-51.14	22.28	0.48
171	SLD 11	777	-55	6246	54.6	41.18	-0.61
171	SLD 12	777	-55	6246	54.6	41.18	-0.61
171	SLD 13	-330	10	5416	-9.98	-23.35	0.01
171	SLD 14	-330	10	5416	-9.98	-23.35	0.01
171	SLD 15	-232	-22	5492	21.74	-17.68	-0.31
171	SLD 16	-232	-22	5492	21.74	-17.68	-0.31
171	SLV 1	3781	58	8486	-55.85	216.9	0.68
171	SLV 2	3781	58	8486	-55.85	216.9	0.68
171	SLV 3	4014	-25	8675	25.35	230.37	-0.13
171	SLV 4	4014	-25	8675	25.35	230.37	-0.13
171	SLV 5	1478	142	6741	-139.96	82.53	1.42
171	SLV 6	1478	142	6741	-139.96	82.53	1.42
171	SLV 7	2256	-132	7373	130.74	127.43	-1.3
171	SLV 8	2256	-132	7373	130.74	127.43	-1.3
171	SLV 9	-262	133	5435	-130.84	-19.18	1.24
171	SLV 10	-262	133	5435	-130.84	-19.18	1.24
171	SLV 11	515	-142	6067	139.86	25.72	-1.48
171	SLV 12	515	-142	6067	139.86	25.72	-1.48
171	SLV 13	-2021	25	4133	-25.46	-122.12	0.08
171	SLV 14	-2021	25	4133	-25.46	-122.12	0.08
171	SLV 15	-1788	-57	4322	55.75	-108.65	-0.74
171	SLV 16	-1788	-57	4322	55.75	-108.65	-0.74
172	SLU 1	793	0	5898	0.11	35.96	0.02
172	SLU 2	749	-1	5817	1.46	33.97	0.01
172	SLU 3	829	0	6071	0.11	37.61	0.02
172	SLU 4	803	-1	6023	0.92	36.41	0.02
172	SLU 5	766	-1	5931	1.46	34.74	0.01
172	SLU 6	846	0	6185	0.11	38.38	0.02
172	SLU 7	820	-1	6137	0.92	37.18	0.02
172	SLU 8	827	0	6125	0.1	37.51	0.02
172	SLU 9	801	-1	6077	0.91	36.32	0.02
172	SLU 10	975	-1	6831	1.5	44.27	0.01
172	SLU 11	1056	0	7085	0.14	47.91	0.03
172	SLU 12	1029	-1	7037	0.95	46.72	0.02
172	SLU 13	992	-1	6944	1.49	45.05	0.01
172	SLU 14	1073	0	7199	0.14	48.69	0.03
172	SLU 15	1046	-1	7150	0.95	47.49	0.02
172	SLU 16	1054	0	7139	0.14	47.82	0.03
172	SLU 17	1027	-1	7091	0.95	46.62	0.02
172	SLU 18	1116	0	7345	0.16	50.69	0.03
172	SLU 19	1090	-1	7297	0.97	49.49	0.02
172	SLU 20	1134	0	7459	0.15	51.46	0.03
172	SLU 21	1107	-1	7411	0.96	50.27	0.02
172	SLU 22	995	0	6818	0.14	45.17	0.03
172	SLU 23	951	-1	6738	1.49	43.17	0.01
172	SLU 24	1032	0	6992	0.14	46.81	0.03
172	SLU 25	1005	-1	6944	0.95	45.62	0.02
172	SLU 26	968	-1	6852	1.49	43.95	0.01
172	SLU 27	1049	0	7106	0.14	47.59	0.03
172	SLU 28	1022	-1	7058	0.95	46.39	0.02
172	SLU 29	1030	0	7046	0.13	46.72	0.03
172	SLU 30	1003	-1	6998	0.94	45.52	0.02
172	SLU 31	1178	-1	7751	1.52	53.48	0.02
172	SLU 32	1258	0	8005	0.17	57.12	0.03
172	SLU 33	1232	-1	7957	0.98	55.92	0.02
172	SLU 34	1195	-1	7865	1.52	54.26	0.02
172	SLU 35	1275	0	8119	0.17	57.9	0.03
172	SLU 36	1249	-1	8071	0.98	56.7	0.02
172	SLU 37	1256	0	8059	0.16	57.03	0.03
172	SLU 38	1230	-1	8011	0.97	55.83	0.02
172	SLU 39	1319	0	8266	0.19	59.9	0.03
172	SLU 40	1293	-1	8218	1	58.7	0.02
172	SLU 41	1336	0	8380	0.18	60.67	0.03
172	SLU 42	1310	-1	8332	0.99	59.48	0.02
172	SLU 43	961	0	7351	0.14	43.59	0.03
172	SLU 44	917	-1	7271	1.49	41.6	0.01
172	SLU 45	998	0	7525	0.14	45.24	0.03
172	SLU 46	971	-1	7477	0.95	44.04	0.02
172	SLU 47	934	-1	7385	1.48	42.37	0.01
172	SLU 48	1015	0	7639	0.13	46.01	0.03
172	SLU 49	988	-1	7591	0.94	44.81	0.02
172	SLU 50	996	0	7579	0.13	45.15	0.03
172	SLU 51	969	-1	7531	0.94	43.95	0.02
172	SLU 52	1144	-1	8284	1.52	51.91	0.02
172	SLU 53	1224	0	8538	0.17	55.55	0.03
172	SLU 54	1198	-1	8490	0.98	54.35	0.02
172	SLU 55	1161	-1	8398	1.52	52.68	0.02
172	SLU 56	1241	0	8652	0.16	56.32	0.03
172	SLU 57	1215	-1	8604	0.97	55.12	0.03

Nodo	Cont.	Reazione a traslazione			Reazione a rotazione		
Ind.	N.br.	x	y	z	x	y	z
172	SLU 58	1222	0	8592	0.16	55.45	0.03
172	SLU 59	1196	-1	8544	0.97	54.26	0.02
172	SLU 60	1285	0	8799	0.18	58.32	0.03
172	SLU 61	1259	-1	8751	0.99	57.12	0.03
172	SLU 62	1302	0	8913	0.18	59.1	0.03
172	SLU 63	1276	-1	8865	0.99	57.9	0.03
172	SLU 64	1164	0	8272	0.16	52.8	0.03
172	SLU 65	1120	-1	8191	1.52	50.81	0.02
172	SLU 66	1200	0	8446	0.16	54.45	0.03
172	SLU 67	1174	-1	8397	0.97	53.25	0.02
172	SLU 68	1137	-1	8305	1.51	51.58	0.02
172	SLU 69	1217	0	8560	0.16	55.22	0.03
172	SLU 70	1191	-1	8511	0.97	54.02	0.02
172	SLU 71	1198	0	8500	0.16	54.35	0.03
172	SLU 72	1172	-1	8451	0.97	53.16	0.02
172	SLU 73	1346	-1	9205	1.55	61.11	0.02
172	SLU 74	1427	0	9459	0.2	64.75	0.04
172	SLU 75	1400	-1	9411	1.01	63.56	0.03
172	SLU 76	1363	-1	9319	1.54	61.89	0.02
172	SLU 77	1444	0	9573	0.19	65.53	0.04
172	SLU 78	1417	-1	9525	1	64.33	0.03
172	SLU 79	1425	0	9513	0.19	64.66	0.04
172	SLU 80	1398	-1	9465	1	63.46	0.03
172	SLU 81	1487	0	9720	0.21	67.53	0.04
172	SLU 82	1461	-1	9671	1.02	66.33	0.03
172	SLU 83	1504	0	9834	0.21	68.31	0.04
172	SLU 84	1478	-1	9785	1.02	67.11	0.03
172	SLE RA 1	851	0	6161	0.12	38.59	0.02
172	SLE RA 2	821	-1	6107	1.02	37.26	0.01
172	SLE RA 3	875	0	6277	0.12	39.69	0.02
172	SLE RA 4	857	0	6244	0.66	38.89	0.02
172	SLE RA 5	833	-1	6183	1.02	37.78	0.01
172	SLE RA 6	886	0	6352	0.12	40.21	0.03
172	SLE RA 7	869	0	6320	0.66	39.41	0.02
172	SLE RA 8	874	0	6313	0.11	39.63	0.02
172	SLE RA 9	856	0	6280	0.65	38.83	0.02
172	SLE RA 10	972	-1	6783	1.04	44.13	0.02
172	SLE RA 11	1026	0	6952	0.14	46.56	0.03
172	SLE RA 12	1008	0	6920	0.68	45.76	0.02
172	SLE RA 13	984	-1	6859	1.04	44.65	0.02
172	SLE RA 14	1037	0	7028	0.14	47.08	0.03
172	SLE RA 15	1020	0	6996	0.68	46.28	0.02
172	SLE RA 16	1025	0	6988	0.14	46.5	0.03
172	SLE RA 17	1007	0	6956	0.68	45.7	0.02
172	SLE RA 18	1066	0	7126	0.15	48.41	0.03
172	SLE RA 19	1049	0	7094	0.69	47.61	0.02
172	SLE RA 20	1078	0	7202	0.15	48.93	0.03
172	SLE RA 21	1060	0	7170	0.69	48.13	0.02
172	SLE FR 1	851	0	6161	0.12	38.59	0.02
172	SLE FR 2	845	0	6150	0.3	38.33	0.02
172	SLE FR 3	855	0	6191	0.12	38.8	0.02
172	SLE FR 4	910	0	6440	0.31	41.27	0.02
172	SLE FR 5	920	0	6481	0.13	41.75	0.03
172	SLE FR 6	959	0	6643	0.14	43.5	0.03
172	SLE QP 1	851	0	6161	0.12	38.59	0.02
172	SLE QP 2	916	0	6450	0.13	41.54	0.03
172	SLD 1	2391	20	6973	-23.01	107.55	-0.14
172	SLD 2	2391	20	6973	-23.01	107.55	-0.14
172	SLD 3	2508	-10	7036	11.43	112.8	-0.06
172	SLD 4	2508	-10	7036	11.43	112.8	-0.06
172	SLD 5	1180	51	6511	-59.05	53.37	-0.15
172	SLD 6	1180	51	6511	-59.05	53.37	-0.15
172	SLD 7	1571	-48	6722	55.76	70.89	0.13
172	SLD 8	1571	-48	6722	55.76	70.89	0.13
172	SLD 9	260	48	6178	-55.5	12.19	-0.08
172	SLD 10	260	48	6178	-55.5	12.19	-0.08
172	SLD 11	651	-51	6390	59.31	29.7	0.2
172	SLD 12	651	-51	6390	59.31	29.7	0.2
172	SLD 13	-677	10	5864	-11.18	-29.72	0.11
172	SLD 14	-677	10	5864	-11.18	-29.72	0.11
172	SLD 15	-560	-20	5928	23.27	-24.47	0.19
172	SLD 16	-560	-20	5928	23.27	-24.47	0.19
172	SLV 1	4260	51	7645	-59.11	191.18	-0.38
172	SLV 2	4260	51	7645	-59.11	191.18	-0.38
172	SLV 3	4538	-25	7806	29.06	203.66	-0.18
172	SLV 4	4538	-25	7806	29.06	203.66	-0.18
172	SLV 5	1496	131	6564	-151.38	67.51	-0.4
172	SLV 6	1496	131	6564	-151.38	67.51	-0.4
172	SLV 7	2425	-123	7102	142.55	109.1	0.27
172	SLV 8	2425	-123	7102	142.55	109.1	0.27
172	SLV 9	-593	123	5799	-142.29	-26.02	-0.22
172	SLV 10	-593	123	5799	-142.29	-26.02	-0.22
172	SLV 11	335	-131	6336	151.64	15.57	0.45
172	SLV 12	335	-131	6336	151.64	15.57	0.45
172	SLV 13	-2707	25	5094	-28.81	-120.58	0.23
172	SLV 14	-2707	25	5094	-28.81	-120.58	0.23
172	SLV 15	-2429	-51	5255	59.37	-108.1	0.43
172	SLV 16	-2429	-51	5255	59.37	-108.1	0.43
173	SLU 1	641	0	5899	0.26	30.79	-0.02
173	SLU 2	597	-1	5815	1.53	28.78	-0.01
173	SLU 3	671	0	6072	0.27	32.28	-0.02

Nodo	Cont.	Reazione a traslazione			Reazione a rotazione		
Ind.	N.br.	x	y	z	x	y	z
173	SLU 4	646	-1	6021	1.03	31.07	-0.02
173	SLU 5	612	-1	5929	1.53	29.46	-0.01
173	SLU 6	686	0	6186	0.27	32.95	-0.02
173	SLU 7	660	-1	6136	1.03	31.75	-0.02
173	SLU 8	669	0	6128	0.26	32.14	-0.02
173	SLU 9	643	-1	6077	1.02	30.93	-0.02
173	SLU 10	794	-1	6839	1.59	38.05	-0.02
173	SLU 11	868	0	7096	0.33	41.54	-0.02
173	SLU 12	842	-1	7046	1.09	40.34	-0.02
173	SLU 13	808	-1	6954	1.59	38.72	-0.02
173	SLU 14	882	0	7210	0.33	42.21	-0.03
173	SLU 15	856	-1	7160	1.09	41.01	-0.02
173	SLU 16	866	0	7152	0.32	41.4	-0.02
173	SLU 17	840	-1	7102	1.08	40.2	-0.02
173	SLU 18	921	0	7362	0.35	44.02	-0.03
173	SLU 19	895	-1	7312	1.11	42.82	-0.02
173	SLU 20	936	0	7477	0.35	44.7	-0.03
173	SLU 21	910	-1	7426	1.11	43.49	-0.02
173	SLU 22	816	0	6828	0.32	39.06	-0.02
173	SLU 23	773	-1	6744	1.58	37.05	-0.02
173	SLU 24	847	0	7000	0.32	40.55	-0.02
173	SLU 25	821	-1	6950	1.08	39.34	-0.02
173	SLU 26	787	-1	6858	1.58	37.73	-0.02
173	SLU 27	861	0	7115	0.32	41.22	-0.02
173	SLU 28	835	-1	7064	1.08	40.02	-0.02
173	SLU 29	844	0	7056	0.31	40.41	-0.02
173	SLU 30	818	-1	7006	1.08	39.2	-0.02
173	SLU 31	969	-1	7768	1.64	46.31	-0.02
173	SLU 32	1043	0	8025	0.38	49.81	-0.03
173	SLU 33	1017	-1	7974	1.14	48.6	-0.02
173	SLU 34	983	-1	7882	1.64	46.99	-0.02
173	SLU 35	1057	0	8139	0.38	50.48	-0.03
173	SLU 36	1031	-1	8089	1.14	49.28	-0.02
173	SLU 37	1041	0	8081	0.37	49.67	-0.03
173	SLU 38	1015	-1	8030	1.13	48.46	-0.02
173	SLU 39	1096	0	8291	0.4	52.29	-0.03
173	SLU 40	1071	-1	8241	1.16	51.09	-0.03
173	SLU 41	1111	0	8405	0.4	52.97	-0.03
173	SLU 42	1085	-1	8355	1.16	51.76	-0.03
173	SLU 43	773	0	7350	0.33	37.2	-0.02
173	SLU 44	730	-1	7266	1.59	35.19	-0.02
173	SLU 45	804	0	7523	0.33	38.68	-0.03
173	SLU 46	778	-1	7473	1.09	37.48	-0.02
173	SLU 47	744	-1	7381	1.59	35.86	-0.02
173	SLU 48	818	0	7637	0.33	39.36	-0.03
173	SLU 49	792	-1	7587	1.09	38.15	-0.02
173	SLU 50	801	0	7579	0.32	38.54	-0.03
173	SLU 51	775	-1	7529	1.08	37.34	-0.02
173	SLU 52	926	-1	8291	1.65	44.45	-0.02
173	SLU 53	1000	0	8547	0.39	47.94	-0.03
173	SLU 54	974	-1	8497	1.15	46.74	-0.03
173	SLU 55	940	-1	8405	1.65	45.12	-0.02
173	SLU 56	1014	0	8662	0.39	48.62	-0.03
173	SLU 57	989	-1	8611	1.15	47.41	-0.03
173	SLU 58	998	0	8603	0.38	47.8	-0.03
173	SLU 59	972	-1	8553	1.14	46.6	-0.03
173	SLU 60	1053	0	8814	0.41	50.43	-0.03
173	SLU 61	1028	-1	8763	1.17	49.22	-0.03
173	SLU 62	1068	0	8928	0.41	51.1	-0.03
173	SLU 63	1042	-1	8878	1.17	49.89	-0.03
173	SLU 64	948	0	8279	0.38	45.46	-0.03
173	SLU 65	905	-1	8195	1.65	43.46	-0.02
173	SLU 66	979	0	8452	0.38	46.95	-0.03
173	SLU 67	953	-1	8401	1.14	45.75	-0.03
173	SLU 68	919	-1	8309	1.65	44.13	-0.02
173	SLU 69	993	0	8566	0.38	47.62	-0.03
173	SLU 70	967	-1	8516	1.14	46.42	-0.03
173	SLU 71	976	0	8508	0.38	46.81	-0.03
173	SLU 72	951	-1	8457	1.14	45.61	-0.03
173	SLU 73	1101	-1	9219	1.71	52.72	-0.03
173	SLU 74	1175	-1	9476	0.44	56.21	-0.03
173	SLU 75	1149	-1	9426	1.2	55.01	-0.03
173	SLU 76	1116	-1	9334	1.7	53.39	-0.03
173	SLU 77	1190	-1	9590	0.44	56.89	-0.03
173	SLU 78	1164	-1	9540	1.2	55.68	-0.03
173	SLU 79	1173	-1	9532	0.43	56.07	-0.03
173	SLU 80	1147	-1	9482	1.2	54.87	-0.03
173	SLU 81	1229	-1	9742	0.46	58.69	-0.03
173	SLU 82	1203	-1	9692	1.22	57.49	-0.03
173	SLU 83	1243	-1	9857	0.46	59.37	-0.03
173	SLU 84	1217	-1	9806	1.22	58.16	-0.03
173	SLE RA 1	691	0	6164	0.28	33.16	-0.02
173	SLE RA 2	662	-1	6108	1.12	31.82	-0.02
173	SLE RA 3	711	0	6279	0.28	34.15	-0.02
173	SLE RA 4	694	-1	6246	0.79	33.34	-0.02
173	SLE RA 5	671	-1	6185	1.12	32.27	-0.02
173	SLE RA 6	721	0	6356	0.28	34.6	-0.02
173	SLE RA 7	703	-1	6322	0.79	33.79	-0.02
173	SLE RA 8	710	0	6317	0.28	34.05	-0.02
173	SLE RA 9	692	-1	6283	0.78	33.25	-0.02
173	SLE RA 10	793	-1	6791	1.16	37.99	-0.02

Nodo	Cont.	Reazione a traslazione			Reazione a rotazione		
Ind.	N.br.	x	y	z	x	y	z
173	SLE RA 11	842	0	6962	0.32	40.32	-0.02
173	SLE RA 12	825	-1	6929	0.83	39.52	-0.02
173	SLE RA 13	802	-1	6868	1.16	38.44	-0.02
173	SLE RA 14	852	0	7039	0.32	40.77	-0.02
173	SLE RA 15	834	-1	7005	0.83	39.97	-0.02
173	SLE RA 16	841	0	7000	0.32	40.23	-0.02
173	SLE RA 17	823	-1	6966	0.82	39.42	-0.02
173	SLE RA 18	878	0	7140	0.33	41.98	-0.02
173	SLE RA 19	861	-1	7106	0.84	41.17	-0.02
173	SLE RA 20	887	0	7216	0.33	42.42	-0.02
173	SLE RA 21	870	-1	7183	0.84	41.62	-0.02
173	SLE FR 1	691	0	6164	0.28	33.16	-0.02
173	SLE FR 2	685	0	6153	0.45	32.89	-0.02
173	SLE FR 3	694	0	6195	0.28	33.33	-0.02
173	SLE FR 4	741	0	6446	0.46	35.53	-0.02
173	SLE FR 5	751	0	6488	0.3	35.98	-0.02
173	SLE FR 6	784	0	6652	0.31	37.57	-0.02
173	SLE QP 1	691	0	6164	0.28	33.16	-0.02
173	SLE QP 2	747	0	6457	0.3	35.8	-0.02
173	SLD 1	2075	22	6784	-23.13	102.42	0.27
173	SLD 2	2075	22	6784	-23.13	102.42	0.27
173	SLD 3	2182	-12	6719	12.3	107.78	-0.11
173	SLD 4	2182	-12	6719	12.3	107.78	-0.11
173	SLD 5	982	57	6653	-60.46	47.67	0.64
173	SLD 6	982	57	6653	-60.46	47.67	0.64
173	SLD 7	1340	-55	6438	57.63	65.51	-0.63
173	SLD 8	1340	-55	6438	57.63	65.51	-0.63
173	SLD 9	153	54	6477	-57.04	6.09	0.58
173	SLD 10	153	54	6477	-57.04	6.09	0.58
173	SLD 11	511	-58	6261	61.06	23.94	-0.69
173	SLD 12	511	-58	6261	61.06	23.94	-0.69
173	SLD 13	-689	11	6195	-11.71	-36.17	0.06
173	SLD 14	-689	11	6195	-11.71	-36.17	0.06
173	SLD 15	-581	-22	6130	23.72	-30.82	-0.32
173	SLD 16	-581	-22	6130	23.72	-30.82	-0.32
173	SLV 1	3758	56	7223	-59.67	186.83	0.72
173	SLV 2	3758	56	7223	-59.67	186.83	0.72
173	SLV 3	4013	-30	7059	31.04	199.55	-0.26
173	SLV 4	4013	-30	7059	31.04	199.55	-0.26
173	SLV 5	1262	147	6936	-155.27	61.83	1.68
173	SLV 6	1262	147	6936	-155.27	61.83	1.68
173	SLV 7	2114	-140	6388	147.1	104.21	-1.57
173	SLV 8	2114	-140	6388	147.1	104.21	-1.57
173	SLV 9	-621	139	6526	-146.51	-32.61	1.52
173	SLV 10	-621	139	6526	-146.51	-32.61	1.52
173	SLV 11	231	-148	5978	155.86	9.78	-1.72
173	SLV 12	231	-148	5978	155.86	9.78	-1.72
173	SLV 13	-2520	30	5855	-30.45	-127.95	0.21
173	SLV 14	-2520	30	5855	-30.45	-127.95	0.21
173	SLV 15	-2264	-56	5691	60.26	-115.23	-0.76
173	SLV 16	-2264	-56	5691	60.26	-115.23	-0.76
174	SLU 1	588	0	5982	0.37	25.11	0
174	SLU 2	544	-1	5893	1.47	23.22	0.01
174	SLU 3	618	0	6156	0.38	26.4	0
174	SLU 4	591	-1	6103	1.04	25.26	0
174	SLU 5	557	-1	6010	1.47	23.78	0.01
174	SLU 6	631	0	6273	0.38	26.96	0
174	SLU 7	605	-1	6220	1.04	25.82	0
174	SLU 8	615	0	6215	0.37	26.24	0
174	SLU 9	588	-1	6162	1.03	25.11	0
174	SLU 10	729	-1	6946	1.55	31.14	0.01
174	SLU 11	803	0	7209	0.46	34.32	0
174	SLU 12	777	-1	7156	1.12	33.18	0
174	SLU 13	742	-1	7063	1.55	31.7	0.01
174	SLU 14	817	0	7326	0.46	34.88	0
174	SLU 15	790	-1	7273	1.12	33.74	0
174	SLU 16	800	0	7268	0.45	34.16	0
174	SLU 17	773	-1	7215	1.11	33.02	0
174	SLU 18	853	0	7486	0.48	36.43	0
174	SLU 19	826	-1	7433	1.14	35.29	0
174	SLU 20	866	0	7603	0.48	36.99	0
174	SLU 21	840	-1	7550	1.14	35.85	0
174	SLU 22	754	0	6935	0.44	32.18	0
174	SLU 23	709	-1	6846	1.54	30.29	0.01
174	SLU 24	783	0	7110	0.45	33.47	0
174	SLU 25	757	-1	7056	1.11	32.33	0
174	SLU 26	722	-1	6963	1.54	30.85	0.01
174	SLU 27	797	0	7226	0.45	34.03	0
174	SLU 28	770	-1	7173	1.11	32.89	0
174	SLU 29	780	0	7168	0.44	33.31	0
174	SLU 30	753	-1	7115	1.1	32.17	0
174	SLU 31	894	-1	7899	1.62	38.21	0.01
174	SLU 32	968	0	8163	0.53	41.39	0
174	SLU 33	942	-1	8109	1.19	40.25	0
174	SLU 34	908	-1	8016	1.62	38.77	0.01
174	SLU 35	982	0	8279	0.53	41.95	0
174	SLU 36	955	-1	8226	1.19	40.81	0
174	SLU 37	965	0	8221	0.52	41.23	0
174	SLU 38	939	-1	8168	1.18	40.09	0
174	SLU 39	1018	0	8439	0.55	43.5	0
174	SLU 40	991	-1	8386	1.21	42.36	0

Nodo	Cont.	Reazione a traslazione			Reazione a rotazione		
Ind.	N.br.	x	y	z	x	y	z
174	SLU 41	1031	0	8556	0.55	44.06	0
174	SLU 42	1005	-1	8503	1.21	42.92	0
174	SLU 43	708	0	7450	0.46	30.22	0
174	SLU 44	664	-1	7361	1.56	28.33	0.01
174	SLU 45	738	0	7624	0.46	31.51	0
174	SLU 46	711	-1	7571	1.13	30.37	0
174	SLU 47	677	-1	7478	1.56	28.89	0.01
174	SLU 48	751	0	7741	0.47	32.07	0
174	SLU 49	725	-1	7688	1.13	30.93	0
174	SLU 50	735	0	7683	0.46	31.35	0
174	SLU 51	708	-1	7630	1.12	30.22	0
174	SLU 52	849	-1	8414	1.64	36.25	0.01
174	SLU 53	923	0	8677	0.54	39.43	0
174	SLU 54	896	-1	8624	1.2	38.29	0
174	SLU 55	862	-1	8531	1.64	36.81	0.01
174	SLU 56	936	0	8794	0.55	39.99	0
174	SLU 57	910	-1	8741	1.21	38.85	0
174	SLU 58	920	0	8736	0.54	39.27	0
174	SLU 59	893	-1	8683	1.2	38.13	0
174	SLU 60	973	0	8954	0.57	41.54	0
174	SLU 61	946	-1	8901	1.23	40.4	0
174	SLU 62	986	0	9071	0.57	42.1	0
174	SLU 63	959	-1	9017	1.23	40.96	0
174	SLU 64	873	0	8403	0.53	37.29	0
174	SLU 65	829	-1	8314	1.63	35.4	0.01
174	SLU 66	903	0	8577	0.53	38.58	0
174	SLU 67	876	-1	8524	1.2	37.44	0
174	SLU 68	842	-1	8431	1.63	35.96	0.01
174	SLU 69	916	0	8694	0.54	39.14	0
174	SLU 70	890	-1	8641	1.2	38	0
174	SLU 71	900	0	8636	0.53	38.42	0
174	SLU 72	873	-1	8583	1.19	37.29	0
174	SLU 73	1014	-1	9367	1.71	43.32	0.01
174	SLU 74	1088	-1	9630	0.61	46.5	0
174	SLU 75	1062	-1	9577	1.27	45.36	0
174	SLU 76	1027	-1	9484	1.71	43.88	0.01
174	SLU 77	1102	-1	9747	0.62	47.06	0
174	SLU 78	1075	-1	9694	1.28	45.92	0
174	SLU 79	1085	-1	9689	0.61	46.34	0
174	SLU 80	1059	-1	9636	1.27	45.2	0
174	SLU 81	1138	-1	9907	0.64	48.61	0
174	SLU 82	1111	-1	9854	1.3	47.47	0
174	SLU 83	1151	-1	10024	0.64	49.17	0
174	SLU 84	1125	-1	9970	1.3	48.03	0
174	SLE RA 1	636	0	6254	0.39	27.13	0
174	SLE RA 2	606	-1	6195	1.12	25.87	0
174	SLE RA 3	655	0	6371	0.4	27.99	0
174	SLE RA 4	638	-1	6335	0.84	27.23	0
174	SLE RA 5	615	-1	6273	1.12	26.25	0
174	SLE RA 6	664	0	6448	0.4	28.37	0
174	SLE RA 7	646	-1	6413	0.84	27.61	0
174	SLE RA 8	653	0	6410	0.39	27.89	0
174	SLE RA 9	635	-1	6374	0.83	27.13	0
174	SLE RA 10	729	-1	6897	1.18	31.15	0
174	SLE RA 11	779	0	7073	0.45	33.27	0
174	SLE RA 12	761	-1	7037	0.89	32.51	0
174	SLE RA 13	738	-1	6975	1.18	31.53	0
174	SLE RA 14	788	0	7150	0.45	33.64	0
174	SLE RA 15	770	-1	7115	0.89	32.89	0
174	SLE RA 16	777	0	7112	0.44	33.16	0
174	SLE RA 17	759	-1	7076	0.88	32.41	0
174	SLE RA 18	812	0	7257	0.46	34.68	0
174	SLE RA 19	794	-1	7221	0.9	33.92	0
174	SLE RA 20	821	0	7335	0.47	35.05	0
174	SLE RA 21	803	-1	7299	0.91	34.29	0
174	SLE FR 1	636	0	6254	0.39	27.13	0
174	SLE FR 2	630	0	6242	0.54	26.88	0
174	SLE FR 3	639	0	6285	0.39	27.28	0
174	SLE FR 4	683	0	6543	0.56	29.14	0
174	SLE FR 5	692	0	6586	0.41	29.55	0
174	SLE FR 6	724	0	6756	0.43	30.9	0
174	SLE QP 1	636	0	6254	0.39	27.13	0
174	SLE QP 2	688	0	6555	0.41	29.4	0
174	SLD 1	2072	20	6728	-21.07	91.14	-0.23
174	SLD 2	2072	20	6728	-21.07	91.14	-0.23
174	SLD 3	2185	-12	6657	11.76	96.14	0.09
174	SLD 4	2185	-12	6657	11.76	96.14	0.09
174	SLD 5	933	54	6716	-55.84	40.35	-0.57
174	SLD 6	933	54	6716	-55.84	40.35	-0.57
174	SLD 7	1308	-52	6477	53.62	56.99	0.52
174	SLD 8	1308	-52	6477	53.62	56.99	0.52
174	SLD 9	69	51	6633	-52.8	1.8	-0.53
174	SLD 10	69	51	6633	-52.8	1.8	-0.53
174	SLD 11	444	-55	6394	56.66	18.45	0.56
174	SLD 12	444	-55	6394	56.66	18.45	0.56
174	SLD 13	-808	11	6453	-10.94	-37.34	-0.1
174	SLD 14	-808	11	6453	-10.94	-37.34	-0.1
174	SLD 15	-695	-21	6382	21.9	-32.35	0.23
174	SLD 16	-695	-21	6382	21.9	-32.35	0.23
174	SLV 1	3826	52	6978	-54.58	169.38	-0.59
174	SLV 2	3826	52	6978	-54.58	169.38	-0.59

Nodo	Cont.	Reazione a traslazione			Reazione a rotazione		
Ind.	N.br.	x	y	z	x	y	z
174	SLV 3	4093	-29	6797	29.51	181.24	0.24
174	SLV 4	4093	-29	6797	29.51	181.24	0.24
174	SLV 5	1224	138	6956	-143.63	53.4	-1.45
174	SLV 6	1224	138	6956	-143.63	53.4	-1.45
174	SLV 7	2115	-132	6353	136.69	92.94	1.34
174	SLV 8	2115	-132	6353	136.69	92.94	1.34
174	SLV 9	-738	131	6757	-135.86	-34.15	-1.34
174	SLV 10	-738	131	6757	-135.86	-34.15	-1.34
174	SLV 11	153	-139	6154	144.45	5.39	1.44
174	SLV 12	153	-139	6154	144.45	5.39	1.44
174	SLV 13	-2716	29	6313	-28.69	-122.45	-0.25
174	SLV 14	-2716	29	6313	-28.69	-122.45	-0.25
174	SLV 15	-2449	-53	6132	55.4	-110.58	0.58
174	SLV 16	-2449	-53	6132	55.4	-110.58	0.58
175	SLU 1	418	-1	6028	0.42	18.48	0
175	SLU 2	375	-1	5936	1.29	16.59	0.02
175	SLU 3	442	-1	6204	0.43	19.56	0
175	SLU 4	417	-1	6148	0.96	18.42	0.01
175	SLU 5	385	-1	6054	1.3	17.02	0.02
175	SLU 6	452	-1	6322	0.43	19.98	0
175	SLU 7	427	-1	6267	0.96	18.85	0.01
175	SLU 8	438	-1	6266	0.42	19.34	0
175	SLU 9	412	-1	6210	0.95	18.2	0.01
175	SLU 10	524	-1	7006	1.39	23.14	0.02
175	SLU 11	591	-1	7274	0.53	26.11	0
175	SLU 12	566	-1	7218	1.05	24.98	0.01
175	SLU 13	534	-1	7125	1.39	23.57	0.02
175	SLU 14	601	-1	7393	0.53	26.54	0
175	SLU 15	576	-1	7337	1.05	25.4	0.01
175	SLU 16	587	-1	7336	0.52	25.9	0
175	SLU 17	561	-1	7281	1.05	24.76	0.01
175	SLU 18	631	-1	7558	0.56	27.85	0
175	SLU 19	605	-1	7502	1.08	26.71	0.01
175	SLU 20	641	-1	7676	0.56	28.28	0
175	SLU 21	615	-1	7621	1.09	27.14	0.01
175	SLU 22	551	-1	6996	0.5	24.32	0
175	SLU 23	508	-1	6904	1.38	22.43	0.02
175	SLU 24	575	-1	7171	0.51	25.4	0
175	SLU 25	549	-1	7116	1.04	24.26	0.01
175	SLU 26	518	-1	7022	1.38	22.86	0.02
175	SLU 27	585	-1	7290	0.51	25.83	0
175	SLU 28	559	-1	7234	1.04	24.69	0.01
175	SLU 29	571	-1	7233	0.51	25.18	0
175	SLU 30	545	-1	7178	1.03	24.05	0.01
175	SLU 31	657	-1	7974	1.47	28.99	0.01
175	SLU 32	724	-1	8242	0.61	31.95	0
175	SLU 33	698	-1	8186	1.13	30.82	0.01
175	SLU 34	667	-1	8093	1.48	29.42	0.01
175	SLU 35	734	-1	8360	0.61	32.38	0
175	SLU 36	708	-1	8305	1.14	31.25	0.01
175	SLU 37	720	-1	8304	0.6	31.74	0
175	SLU 38	694	-1	8248	1.13	30.6	0.01
175	SLU 39	764	-1	8525	0.64	33.69	0
175	SLU 40	738	-1	8470	1.17	32.56	0.01
175	SLU 41	774	-1	8644	0.64	34.12	0
175	SLU 42	748	-1	8588	1.17	32.98	0.01
175	SLU 43	498	-1	7505	0.51	22.02	0
175	SLU 44	455	-1	7413	1.39	20.13	0.02
175	SLU 45	523	-1	7680	0.53	23.1	0
175	SLU 46	497	-1	7625	1.05	21.96	0.01
175	SLU 47	465	-1	7531	1.39	20.56	0.02
175	SLU 48	532	-1	7799	0.53	23.53	0
175	SLU 49	507	-1	7743	1.06	22.39	0.01
175	SLU 50	518	-1	7742	0.52	22.88	0
175	SLU 51	492	-1	7687	1.05	21.74	0.01
175	SLU 52	604	-1	8483	1.49	26.69	0.02
175	SLU 53	672	-1	8751	0.62	29.65	0
175	SLU 54	646	-1	8695	1.15	28.52	0.01
175	SLU 55	614	-1	8602	1.49	27.12	0.02
175	SLU 56	681	-1	8869	0.63	30.08	0
175	SLU 57	656	-1	8814	1.15	28.95	0.01
175	SLU 58	667	-1	8813	0.62	29.44	0
175	SLU 59	641	-1	8757	1.14	28.3	0.01
175	SLU 60	711	-1	9034	0.65	31.39	0
175	SLU 61	685	-1	8979	1.18	30.25	0.01
175	SLU 62	721	-1	9153	0.66	31.82	0
175	SLU 63	695	-1	9097	1.18	30.68	0.01
175	SLU 64	631	-1	8473	0.6	27.87	0
175	SLU 65	588	-1	8380	1.47	25.97	0.02
175	SLU 66	655	-1	8648	0.61	28.94	0
175	SLU 67	629	-1	8592	1.13	27.8	0.01
175	SLU 68	598	-1	8499	1.48	26.4	0.02
175	SLU 69	665	-1	8767	0.61	29.37	0
175	SLU 70	639	-1	8711	1.14	28.23	0.01
175	SLU 71	651	-1	8710	0.6	28.72	0
175	SLU 72	625	-1	8655	1.13	27.59	0.01
175	SLU 73	737	-1	9451	1.57	32.53	0.02
175	SLU 74	804	-1	9718	0.71	35.5	0
175	SLU 75	778	-1	9663	1.23	34.36	0.01
175	SLU 76	747	-1	9569	1.57	32.96	0.02
175	SLU 77	814	-1	9837	0.71	35.93	0

Nodo	Cont.	Reazione a traslazione			Reazione a rotazione		
Ind.	N.br.	x	y	z	x	y	z
175	SLU 78	788	-1	9782	1.23	34.79	0.01
175	SLU 79	800	-1	9780	0.7	35.28	0
175	SLU 80	774	-1	9725	1.23	34.14	0.01
175	SLU 81	844	-1	10002	0.74	37.23	0
175	SLU 82	818	-1	9946	1.26	36.1	0.01
175	SLU 83	854	-1	10121	0.74	37.66	0
175	SLU 84	828	-1	10065	1.27	36.53	0.01
175	SLE RA 1	456	-1	6305	0.44	20.15	0
175	SLE RA 2	428	-1	6243	1.03	18.89	0.01
175	SLE RA 3	472	-1	6422	0.45	20.87	0
175	SLE RA 4	455	-1	6385	0.8	20.11	0.01
175	SLE RA 5	434	-1	6322	1.03	19.17	0.01
175	SLE RA 6	479	-1	6501	0.45	21.15	0
175	SLE RA 7	462	-1	6464	0.8	20.39	0.01
175	SLE RA 8	469	-1	6463	0.45	20.72	0
175	SLE RA 9	452	-1	6426	0.8	19.97	0.01
175	SLE RA 10	527	-1	6957	1.09	23.26	0.01
175	SLE RA 11	572	-1	7135	0.51	25.24	0
175	SLE RA 12	554	-1	7098	0.86	24.48	0.01
175	SLE RA 13	533	-1	7036	1.09	23.55	0.01
175	SLE RA 14	578	-1	7214	0.52	25.52	0
175	SLE RA 15	561	-1	7177	0.87	24.77	0.01
175	SLE RA 16	569	-1	7177	0.51	25.09	0
175	SLE RA 17	552	-1	7140	0.86	24.34	0.01
175	SLE RA 18	598	-1	7324	0.53	26.4	0
175	SLE RA 19	581	-1	7287	0.88	25.64	0.01
175	SLE RA 20	605	-1	7403	0.54	26.68	0
175	SLE RA 21	588	-1	7366	0.89	25.92	0.01
175	SLE FR 1	456	-1	6305	0.44	20.15	0
175	SLE FR 2	451	-1	6293	0.56	19.9	0
175	SLE FR 3	459	-1	6336	0.44	20.27	0
175	SLE FR 4	493	-1	6598	0.59	21.77	0
175	SLE FR 5	501	-1	6642	0.47	22.14	0
175	SLE FR 6	527	-1	6815	0.49	23.27	0
175	SLE QP 1	456	-1	6305	0.44	20.15	0
175	SLE QP 2	499	-1	6611	0.47	22.02	0
175	SLD 1	1837	15	6294	-17.99	83.7	-0.23
175	SLD 2	1837	15	6294	-17.99	83.7	-0.23
175	SLD 3	1947	-9	6208	10.25	88.76	0.09
175	SLD 4	1947	-9	6208	10.25	88.76	0.09
175	SLD 5	733	40	6645	-47.89	32.85	-0.56
175	SLD 6	733	40	6645	-47.89	32.85	-0.56
175	SLD 7	1100	-39	6361	46.22	49.72	0.52
175	SLD 8	1100	-39	6361	46.22	49.72	0.52
175	SLD 9	-103	38	6861	-45.29	-5.67	-0.52
175	SLD 10	-103	38	6861	-45.29	-5.67	-0.52
175	SLD 11	264	-42	6577	48.83	11.2	0.56
175	SLD 12	264	-42	6577	48.83	11.2	0.56
175	SLD 13	-949	8	7013	-9.31	-44.71	-0.09
175	SLD 14	-949	8	7013	-9.31	-44.71	-0.09
175	SLD 15	-839	-16	6928	18.92	-39.65	0.24
175	SLD 16	-839	-16	6928	18.92	-39.65	0.24
175	SLV 1	3533	39	5889	-46.71	161.85	-0.59
175	SLV 2	3533	39	5889	-46.71	161.85	-0.59
175	SLV 3	3794	-22	5677	25.61	173.87	0.23
175	SLV 4	3794	-22	5677	25.61	173.87	0.23
175	SLV 5	1012	104	6715	-123.36	45.74	-1.43
175	SLV 6	1012	104	6715	-123.36	45.74	-1.43
175	SLV 7	1884	-100	6009	117.69	85.81	1.32
175	SLV 8	1884	-100	6009	117.69	85.81	1.32
175	SLV 9	-887	99	7212	-116.75	-41.76	-1.32
175	SLV 10	-887	99	7212	-116.75	-41.76	-1.32
175	SLV 11	-15	-105	6506	124.3	-1.69	1.43
175	SLV 12	-15	-105	6506	124.3	-1.69	1.43
175	SLV 13	-2797	21	7544	-24.67	-129.82	-0.23
175	SLV 14	-2797	21	7544	-24.67	-129.82	-0.23
175	SLV 15	-2535	-40	7333	47.65	-117.8	0.6
175	SLV 16	-2535	-40	7333	47.65	-117.8	0.6
176	SLU 1	350	0	6143	0.36	11.22	0
176	SLU 2	307	-1	6045	0.95	9.19	-0.01
176	SLU 3	372	0	6321	0.37	12.11	0
176	SLU 4	346	0	6262	0.72	10.9	-0.01
176	SLU 5	316	-1	6167	0.95	9.47	-0.01
176	SLU 6	381	0	6443	0.37	12.4	0
176	SLU 7	355	0	6384	0.73	11.18	-0.01
176	SLU 8	368	0	6387	0.37	11.78	0
176	SLU 9	342	0	6328	0.72	10.56	-0.01
176	SLU 10	442	-1	7145	1.06	14.56	-0.01
176	SLU 11	507	0	7421	0.48	17.49	0
176	SLU 12	481	-1	7362	0.83	16.27	-0.01
176	SLU 13	451	-1	7267	1.06	14.84	-0.01
176	SLU 14	515	0	7543	0.49	17.77	0
176	SLU 15	490	-1	7484	0.84	16.55	-0.01
176	SLU 16	502	0	7487	0.48	17.15	0
176	SLU 17	476	-1	7428	0.83	15.94	-0.01
176	SLU 18	543	0	7715	0.52	18.89	0
176	SLU 19	517	-1	7656	0.87	17.68	0
176	SLU 20	551	0	7837	0.52	19.18	0
176	SLU 21	526	-1	7778	0.87	17.96	0
176	SLU 22	470	0	7137	0.45	15.99	0
176	SLU 23	427	-1	7039	1.04	13.96	-0.01

Nodo	Cont.	Reazione a traslazione			Reazione a rotazione		
Ind.	N.br.	x	y	z	x	y	z
176	SLU 24	492	0	7315	0.46	16.88	0
176	SLU 25	466	-1	7256	0.81	15.67	-0.01
176	SLU 26	436	-1	7161	1.04	14.24	-0.01
176	SLU 27	501	0	7437	0.46	17.17	0
176	SLU 28	475	-1	7378	0.81	15.95	-0.01
176	SLU 29	487	0	7381	0.46	16.55	0
176	SLU 30	462	-1	7322	0.81	15.33	-0.01
176	SLU 31	562	-1	8139	1.15	19.33	-0.01
176	SLU 32	627	0	8415	0.57	22.26	0
176	SLU 33	601	-1	8356	0.92	21.04	0
176	SLU 34	570	-1	8261	1.15	19.61	-0.01
176	SLU 35	635	0	8537	0.57	22.54	0
176	SLU 36	609	-1	8478	0.92	21.32	0
176	SLU 37	622	0	8481	0.57	21.92	0
176	SLU 38	596	-1	8423	0.92	20.71	0
176	SLU 39	662	0	8709	0.61	23.66	0
176	SLU 40	637	-1	8650	0.96	22.45	0
176	SLU 41	671	0	8831	0.61	23.95	0
176	SLU 42	645	-1	8772	0.96	22.73	0
176	SLU 43	414	0	7645	0.44	12.95	-0.01
176	SLU 44	371	-1	7547	1.03	10.92	-0.01
176	SLU 45	436	0	7823	0.45	13.84	-0.01
176	SLU 46	410	-1	7764	0.8	12.63	-0.01
176	SLU 47	380	-1	7669	1.03	11.2	-0.01
176	SLU 48	445	0	7945	0.45	14.12	-0.01
176	SLU 49	419	-1	7886	0.8	12.91	-0.01
176	SLU 50	432	0	7889	0.45	13.51	-0.01
176	SLU 51	406	-1	7830	0.8	12.29	-0.01
176	SLU 52	506	-1	8647	1.14	16.29	-0.01
176	SLU 53	571	0	8923	0.56	19.22	0
176	SLU 54	545	-1	8864	0.91	18	-0.01
176	SLU 55	515	-1	8769	1.14	16.57	-0.01
176	SLU 56	579	0	9045	0.56	19.5	0
176	SLU 57	554	-1	8986	0.92	18.28	-0.01
176	SLU 58	566	0	8989	0.56	18.88	0
176	SLU 59	540	-1	8931	0.91	17.67	-0.01
176	SLU 60	607	0	9217	0.6	20.62	0
176	SLU 61	581	-1	9158	0.95	19.41	-0.01
176	SLU 62	615	0	9339	0.6	20.91	0
176	SLU 63	590	-1	9280	0.95	19.69	-0.01
176	SLU 64	534	0	8639	0.53	17.72	0
176	SLU 65	491	-1	8541	1.11	15.69	-0.01
176	SLU 66	556	0	8817	0.54	18.61	0
176	SLU 67	530	-1	8758	0.89	17.4	-0.01
176	SLU 68	500	-1	8663	1.12	15.97	-0.01
176	SLU 69	565	0	8939	0.54	18.89	-0.01
176	SLU 70	539	-1	8880	0.89	17.68	-0.01
176	SLU 71	551	0	8883	0.53	18.28	-0.01
176	SLU 72	526	-1	8824	0.89	17.06	-0.01
176	SLU 73	626	-1	9641	1.23	21.06	-0.01
176	SLU 74	691	-1	9917	0.65	23.99	0
176	SLU 75	665	-1	9858	1	22.77	-0.01
176	SLU 76	634	-1	9763	1.23	21.34	-0.01
176	SLU 77	699	-1	10039	0.65	24.27	0
176	SLU 78	673	-1	9980	1	23.05	-0.01
176	SLU 79	686	-1	9983	0.65	23.65	0
176	SLU 80	660	-1	9925	1	22.44	-0.01
176	SLU 81	726	-1	10211	0.69	25.39	0
176	SLU 82	701	-1	10152	1.04	24.18	0
176	SLU 83	735	-1	10333	0.69	25.68	0
176	SLU 84	709	-1	10274	1.04	24.46	0
176	SLE RA 1	384	0	6427	0.39	12.58	0
176	SLE RA 2	356	-1	6361	0.78	11.23	-0.01
176	SLE RA 3	399	0	6545	0.39	13.18	0
176	SLE RA 4	382	0	6506	0.63	12.37	-0.01
176	SLE RA 5	362	-1	6443	0.78	11.42	-0.01
176	SLE RA 6	405	0	6627	0.4	13.37	0
176	SLE RA 7	388	0	6588	0.63	12.55	-0.01
176	SLE RA 8	396	0	6590	0.39	12.96	0
176	SLE RA 9	379	0	6550	0.63	12.14	-0.01
176	SLE RA 10	446	-1	7095	0.85	14.81	-0.01
176	SLE RA 11	489	0	7279	0.47	16.76	0
176	SLE RA 12	472	0	7240	0.7	15.95	0
176	SLE RA 13	451	-1	7176	0.85	15	-0.01
176	SLE RA 14	495	0	7361	0.47	16.95	0
176	SLE RA 15	477	0	7321	0.7	16.14	0
176	SLE RA 16	486	0	7323	0.47	16.54	0
176	SLE RA 17	469	0	7284	0.7	15.73	0
176	SLE RA 18	513	0	7475	0.49	17.7	0
176	SLE RA 19	496	-1	7436	0.73	16.89	0
176	SLE RA 20	519	0	7556	0.5	17.89	0
176	SLE RA 21	501	-1	7517	0.73	17.07	0
176	SLE FR 1	384	0	6427	0.39	12.58	0
176	SLE FR 2	379	0	6414	0.47	12.31	0
176	SLE FR 3	387	0	6459	0.39	12.65	0
176	SLE FR 4	417	0	6728	0.5	13.84	0
176	SLE FR 5	425	0	6774	0.42	14.19	0
176	SLE FR 6	449	0	6951	0.44	15.14	0
176	SLE QP 1	384	0	6427	0.39	12.58	0
176	SLE QP 2	423	0	6741	0.42	14.11	0
176	SLD 1	1713	13	6104	-13.34	82.52	-0.16

Nodo	Cont.	Reazione a traslazione			Reazione a rotazione		
Ind.	N.br.	x	y	z	x	y	z
176	SLD 2	1713	13	6104	-13.34	82.52	-0.16
176	SLD 3	1820	-7	5999	7.31	88.18	0
176	SLD 4	1820	-7	5999	7.31	88.18	0
176	SLD 5	648	34	6709	-35.03	26.05	-0.29
176	SLD 6	648	34	6709	-35.03	26.05	-0.29
176	SLD 7	1004	-32	6359	33.81	44.92	0.24
176	SLD 8	1004	-32	6359	33.81	44.92	0.24
176	SLD 9	-159	32	7123	-32.97	-16.69	-0.25
176	SLD 10	-159	32	7123	-32.97	-16.69	-0.25
176	SLD 11	198	-35	6773	35.87	2.18	0.29
176	SLD 12	198	-35	6773	35.87	2.18	0.29
176	SLD 13	-974	6	7483	-6.47	-59.95	-0.01
176	SLD 14	-974	6	7483	-6.47	-59.95	-0.01
176	SLD 15	-867	-14	7378	14.18	-54.29	0.15
176	SLD 16	-867	-14	7378	14.18	-54.29	0.15
176	SLV 1	3348	34	5293	-34.63	169.2	-0.38
176	SLV 2	3348	34	5293	-34.63	169.2	-0.38
176	SLV 3	3602	-17	5035	18.25	182.64	0.02
176	SLV 4	3602	-17	5035	18.25	182.64	0.02
176	SLV 5	914	87	6698	-90.3	40.27	-0.73
176	SLV 6	914	87	6698	-90.3	40.27	-0.73
176	SLV 7	1763	-82	5838	85.98	85.05	0.62
176	SLV 8	1763	-82	5838	85.98	85.05	0.62
176	SLV 9	-917	82	7644	-85.14	-56.82	-0.63
176	SLV 10	-917	82	7644	-85.14	-56.82	-0.63
176	SLV 11	-68	-88	6784	91.14	-12.04	0.72
176	SLV 12	-68	-88	6784	91.14	-12.04	0.72
176	SLV 13	-2756	16	8448	-17.41	-154.41	-0.03
176	SLV 14	-2756	16	8448	-17.41	-154.41	-0.03
176	SLV 15	-2502	-35	8190	35.47	-140.97	0.38
176	SLV 16	-2502	-35	8190	35.47	-140.97	0.38
177	SLU 1	-47	0	6104	0.27	-3.79	0.02
177	SLU 2	-78	0	6009	0.6	-5.65	0.05
177	SLU 3	-40	0	6278	0.27	-3.31	0.02
177	SLU 4	-58	0	6221	0.47	-4.42	0.04
177	SLU 5	-78	0	6132	0.6	-5.67	0.05
177	SLU 6	-39	0	6401	0.27	-3.33	0.02
177	SLU 7	-58	0	6344	0.47	-4.45	0.04
177	SLU 8	-47	0	6350	0.27	-3.83	0.02
177	SLU 9	-65	0	6292	0.47	-4.95	0.04
177	SLU 10	-32	0	7099	0.72	-2.94	0.04
177	SLU 11	7	0	7369	0.4	-0.6	0.02
177	SLU 12	-12	0	7311	0.59	-1.71	0.03
177	SLU 13	-32	0	7222	0.72	-2.96	0.04
177	SLU 14	7	0	7491	0.4	-0.62	0.02
177	SLU 15	-12	0	7434	0.59	-1.74	0.03
177	SLU 16	0	0	7440	0.39	-1.13	0.02
177	SLU 17	-19	0	7383	0.59	-2.24	0.03
177	SLU 18	19	0	7662	0.44	0.08	0.02
177	SLU 19	0	0	7605	0.64	-1.03	0.03
177	SLU 20	19	0	7784	0.44	0.06	0.02
177	SLU 21	1	0	7727	0.64	-1.06	0.03
177	SLU 22	-7	0	7089	0.36	-1.42	0.02
177	SLU 23	-38	0	6993	0.69	-3.29	0.05
177	SLU 24	1	0	7263	0.36	-0.94	0.02
177	SLU 25	-18	0	7206	0.56	-2.06	0.04
177	SLU 26	-38	0	7116	0.69	-3.31	0.05
177	SLU 27	1	0	7385	0.36	-0.96	0.02
177	SLU 28	-17	0	7328	0.56	-2.08	0.04
177	SLU 29	-6	0	7334	0.36	-1.47	0.02
177	SLU 30	-25	0	7277	0.56	-2.59	0.04
177	SLU 31	9	0	8084	0.81	-0.58	0.04
177	SLU 32	47	0	8353	0.48	1.77	0.02
177	SLU 33	29	0	8296	0.68	0.65	0.03
177	SLU 34	9	0	8206	0.81	-0.6	0.04
177	SLU 35	48	0	8476	0.49	1.75	0.02
177	SLU 36	29	0	8418	0.68	0.63	0.03
177	SLU 37	40	0	8424	0.48	1.24	0.02
177	SLU 38	22	0	8367	0.68	0.12	0.03
177	SLU 39	60	0	8646	0.53	2.45	0.02
177	SLU 40	41	0	8589	0.73	1.33	0.03
177	SLU 41	60	0	8769	0.53	2.42	0.02
177	SLU 42	41	0	8712	0.73	1.31	0.03
177	SLU 43	-75	0	7598	0.31	-5.73	0.03
177	SLU 44	-106	0	7503	0.65	-7.6	0.05
177	SLU 45	-68	0	7772	0.32	-5.25	0.03
177	SLU 46	-86	0	7715	0.52	-6.37	0.04
177	SLU 47	-106	0	7625	0.65	-7.62	0.05
177	SLU 48	-67	0	7895	0.32	-5.28	0.03
177	SLU 49	-86	0	7838	0.52	-6.39	0.04
177	SLU 50	-75	0	7843	0.32	-5.78	0.03
177	SLU 51	-93	0	7786	0.52	-6.9	0.04
177	SLU 52	-60	0	8593	0.77	-4.89	0.05
177	SLU 53	-21	0	8862	0.44	-2.54	0.03
177	SLU 54	-40	0	8805	0.64	-3.66	0.04
177	SLU 55	-60	0	8716	0.77	-4.91	0.05
177	SLU 56	-21	0	8985	0.44	-2.57	0.03
177	SLU 57	-40	0	8928	0.64	-3.68	0.04
177	SLU 58	-28	0	8934	0.44	-3.07	0.03
177	SLU 59	-47	0	8876	0.64	-4.19	0.04
177	SLU 60	-9	0	9155	0.49	-1.86	0.03

Nodo	Cont.	Reazione a traslazione			Reazione a rotazione		
Ind.	N.br.	x	y	z	x	y	z
177	SLU 61	-28	0	9098	0.69	-2.98	0.04
177	SLU 62	-9	0	9278	0.49	-1.89	0.03
177	SLU 63	-27	0	9221	0.69	-3	0.04
177	SLU 64	-35	0	8582	0.4	-3.37	0.03
177	SLU 65	-66	0	8487	0.74	-5.23	0.05
177	SLU 66	-27	0	8756	0.41	-2.89	0.03
177	SLU 67	-46	0	8699	0.61	-4	0.04
177	SLU 68	-66	0	8610	0.74	-5.26	0.05
177	SLU 69	-27	0	8879	0.41	-2.91	0.03
177	SLU 70	-45	0	8822	0.61	-4.03	0.04
177	SLU 71	-34	0	8828	0.41	-3.42	0.03
177	SLU 72	-53	0	8771	0.61	-4.53	0.04
177	SLU 73	-19	0	9577	0.86	-2.52	0.05
177	SLU 74	19	0	9847	0.53	-0.18	0.03
177	SLU 75	1	0	9790	0.73	-1.3	0.04
177	SLU 76	-19	0	9700	0.86	-2.55	0.05
177	SLU 77	20	0	9969	0.53	-0.2	0.03
177	SLU 78	1	0	9912	0.73	-1.32	0.04
177	SLU 79	12	0	9918	0.53	-0.71	0.03
177	SLU 80	-6	0	9861	0.73	-1.82	0.04
177	SLU 81	31	0	10140	0.58	0.5	0.02
177	SLU 82	13	0	10083	0.78	-0.62	0.04
177	SLU 83	32	0	10263	0.58	0.48	0.03
177	SLU 84	13	0	10205	0.78	-0.64	0.04
177	SLE RA 1	-36	0	6385	0.29	-3.11	0.02
177	SLE RA 2	-56	0	6322	0.51	-4.35	0.04
177	SLE RA 3	-31	0	6502	0.29	-2.79	0.02
177	SLE RA 4	-43	0	6463	0.43	-3.54	0.03
177	SLE RA 5	-56	0	6404	0.51	-4.37	0.04
177	SLE RA 6	-30	0	6583	0.3	-2.81	0.02
177	SLE RA 7	-43	0	6545	0.43	-3.55	0.03
177	SLE RA 8	-35	0	6549	0.29	-3.14	0.02
177	SLE RA 9	-48	0	6511	0.43	-3.89	0.03
177	SLE RA 10	-25	0	7049	0.6	-2.55	0.04
177	SLE RA 11	0	0	7228	0.38	-0.98	0.02
177	SLE RA 12	-12	0	7190	0.51	-1.73	0.03
177	SLE RA 13	-25	0	7131	0.6	-2.56	0.04
177	SLE RA 14	1	0	7310	0.38	-1	0.02
177	SLE RA 15	-12	0	7272	0.51	-1.74	0.03
177	SLE RA 16	-4	0	7276	0.38	-1.34	0.02
177	SLE RA 17	-17	0	7238	0.51	-2.08	0.03
177	SLE RA 18	9	0	7424	0.41	-0.53	0.02
177	SLE RA 19	-4	0	7386	0.54	-1.28	0.03
177	SLE RA 20	9	0	7506	0.41	-0.55	0.02
177	SLE RA 21	-4	0	7467	0.54	-1.29	0.03
177	SLE FR 1	-36	0	6385	0.29	-3.11	0.02
177	SLE FR 2	-40	0	6373	0.34	-3.36	0.02
177	SLE FR 3	-36	0	6418	0.29	-3.12	0.02
177	SLE FR 4	-27	0	6684	0.37	-2.59	0.02
177	SLE FR 5	-22	0	6730	0.33	-2.34	0.02
177	SLE FR 6	-14	0	6905	0.35	-1.82	0.02
177	SLE QP 1	-36	0	6385	0.29	-3.11	0.02
177	SLE QP 2	-22	0	6697	0.33	-2.34	0.02
177	SLD 1	1018	9	5374	-9.12	72.44	-0.4
177	SLD 2	1018	9	5374	-9.12	72.44	-0.4
177	SLD 3	1104	-2	5224	4.34	78.64	0.25
177	SLD 4	1104	-2	5224	4.34	78.64	0.25
177	SLD 5	160	19	6528	-22.92	10.69	-1.09
177	SLD 6	160	19	6528	-22.92	10.69	-1.09
177	SLD 7	446	-17	6028	21.94	31.36	1.08
177	SLD 8	446	-17	6028	21.94	31.36	1.08
177	SLD 9	-491	16	7366	-21.29	-36.04	-1.04
177	SLD 10	-491	16	7366	-21.29	-36.04	-1.04
177	SLD 11	-204	-19	6866	23.57	-15.36	1.14
177	SLD 12	-204	-19	6866	23.57	-15.36	1.14
177	SLD 13	-1149	2	8170	-3.69	-83.32	-0.21
177	SLD 14	-1149	2	8170	-3.69	-83.32	-0.21
177	SLD 15	-1063	-9	8020	9.77	-77.11	0.44
177	SLD 16	-1063	-9	8020	9.77	-77.11	0.44
177	SLV 1	2337	22	3691	-23.55	167.23	-1.06
177	SLV 2	2337	22	3691	-23.55	167.23	-1.06
177	SLV 3	2541	-5	3330	10.87	181.93	0.61
177	SLV 4	2541	-5	3330	10.87	181.93	0.61
177	SLV 5	376	48	6342	-59.05	26.25	-2.84
177	SLV 6	376	48	6342	-59.05	26.25	-2.84
177	SLV 7	1056	-43	5140	55.71	75.23	2.73
177	SLV 8	1056	-43	5140	55.71	75.23	2.73
177	SLV 9	-1101	42	8254	-55.05	-79.9	-2.69
177	SLV 10	-1101	42	8254	-55.05	-79.9	-2.69
177	SLV 11	-421	-48	7052	59.71	-30.92	2.88
177	SLV 12	-421	-48	7052	59.71	-30.92	2.88
177	SLV 13	-2586	5	10064	-10.22	-186.6	-0.57
177	SLV 14	-2586	5	10064	-10.22	-186.6	-0.57
177	SLV 15	-2382	-22	9703	24.21	-171.91	1.1
177	SLV 16	-2382	-22	9703	24.21	-171.91	1.1
178	SLU 1	-259	0	6056	0.11	-26.37	0.01
178	SLU 2	-274	1	5972	0.07	-27.6	0.07
178	SLU 3	-261	0	6225	0.11	-26.62	0.01
178	SLU 4	-270	0	6175	0.09	-27.36	0.04
178	SLU 5	-278	1	6095	0.07	-28.1	0.07
178	SLU 6	-266	0	6348	0.11	-27.13	0.01

Nodo	Cont.	Reazione a traslazione			Reazione a rotazione		
Ind.	N.br.	x	y	z	x	y	z
178	SLU 7	-274	0	6297	0.08	-27.86	0.04
178	SLU 8	-268	0	6302	0.11	-27.37	0.01
178	SLU 9	-277	0	6251	0.08	-28.11	0.04
178	SLU 10	-288	0	7041	0.21	-29.56	0.06
178	SLU 11	-275	0	7294	0.25	-28.59	0
178	SLU 12	-284	0	7243	0.22	-29.33	0.04
178	SLU 13	-292	0	7164	0.2	-30.06	0.06
178	SLU 14	-280	0	7417	0.25	-29.09	0
178	SLU 15	-288	0	7366	0.22	-29.83	0.04
178	SLU 16	-282	0	7371	0.25	-29.34	0
178	SLU 17	-291	0	7320	0.22	-30.08	0.04
178	SLU 18	-279	0	7583	0.31	-29.17	0
178	SLU 19	-288	0	7533	0.28	-29.91	0.03
178	SLU 20	-283	0	7706	0.31	-29.68	0
178	SLU 21	-292	0	7655	0.28	-30.41	0.03
178	SLU 22	-272	0	7022	0.2	-28.21	0.01
178	SLU 23	-287	0	6937	0.16	-29.44	0.06
178	SLU 24	-275	0	7190	0.2	-28.46	0.01
178	SLU 25	-283	0	7140	0.18	-29.2	0.04
178	SLU 26	-291	0	7060	0.16	-29.94	0.06
178	SLU 27	-279	0	7313	0.2	-28.97	0.01
178	SLU 28	-288	0	7263	0.17	-29.7	0.04
178	SLU 29	-281	0	7267	0.2	-29.21	0.01
178	SLU 30	-290	0	7217	0.17	-29.95	0.04
178	SLU 31	-301	0	8006	0.3	-31.4	0.05
178	SLU 32	-288	0	8259	0.34	-30.43	0
178	SLU 33	-297	0	8209	0.31	-31.17	0.03
178	SLU 34	-305	0	8129	0.29	-31.9	0.05
178	SLU 35	-293	0	8382	0.34	-30.93	0
178	SLU 36	-302	0	8332	0.31	-31.67	0.03
178	SLU 37	-295	0	8336	0.34	-31.18	0
178	SLU 38	-304	0	8286	0.31	-31.92	0.03
178	SLU 39	-292	0	8549	0.4	-31.01	-0.01
178	SLU 40	-301	0	8498	0.37	-31.75	0.03
178	SLU 41	-297	0	8671	0.4	-31.52	-0.01
178	SLU 42	-305	0	8621	0.37	-32.25	0.03
178	SLU 43	-332	0	7542	0.12	-33.64	0.02
178	SLU 44	-347	1	7458	0.07	-34.87	0.07
178	SLU 45	-334	0	7711	0.12	-33.9	0.02
178	SLU 46	-343	0	7660	0.09	-34.64	0.05
178	SLU 47	-351	1	7581	0.07	-35.38	0.07
178	SLU 48	-339	0	7834	0.12	-34.41	0.02
178	SLU 49	-348	0	7783	0.09	-35.14	0.05
178	SLU 50	-341	0	7788	0.12	-34.65	0.02
178	SLU 51	-350	0	7737	0.09	-35.39	0.05
178	SLU 52	-361	0	8527	0.21	-36.84	0.06
178	SLU 53	-348	0	8780	0.26	-35.87	0.01
178	SLU 54	-357	0	8729	0.23	-36.6	0.04
178	SLU 55	-365	0	8650	0.21	-37.34	0.06
178	SLU 56	-353	0	8903	0.25	-36.37	0.01
178	SLU 57	-362	0	8852	0.23	-37.11	0.04
178	SLU 58	-355	0	8857	0.25	-36.62	0.01
178	SLU 59	-364	0	8806	0.22	-37.35	0.04
178	SLU 60	-352	0	9069	0.31	-36.45	0
178	SLU 61	-361	0	9018	0.29	-37.19	0.04
178	SLU 62	-357	0	9192	0.31	-36.95	0
178	SLU 63	-365	0	9141	0.29	-37.69	0.04
178	SLU 64	-346	0	8507	0.21	-35.48	0.01
178	SLU 65	-360	1	8423	0.16	-36.71	0.07
178	SLU 66	-348	0	8676	0.21	-35.74	0.01
178	SLU 67	-356	0	8626	0.18	-36.48	0.04
178	SLU 68	-365	1	8546	0.16	-37.22	0.07
178	SLU 69	-352	0	8799	0.21	-36.25	0.01
178	SLU 70	-361	0	8749	0.18	-36.98	0.05
178	SLU 71	-354	0	8753	0.21	-36.49	0.01
178	SLU 72	-363	0	8703	0.18	-37.23	0.04
178	SLU 73	-374	0	9492	0.3	-38.68	0.06
178	SLU 74	-362	0	9745	0.35	-37.71	0
178	SLU 75	-370	0	9695	0.32	-38.44	0.04
178	SLU 76	-379	0	9615	0.3	-39.18	0.06
178	SLU 77	-366	0	9868	0.34	-38.21	0
178	SLU 78	-375	0	9818	0.32	-38.95	0.04
178	SLU 79	-368	0	9822	0.34	-38.46	0
178	SLU 80	-377	0	9772	0.31	-39.19	0.04
178	SLU 81	-366	0	10034	0.4	-38.29	0
178	SLU 82	-374	0	9984	0.38	-39.03	0.03
178	SLU 83	-370	0	10157	0.4	-38.79	0
178	SLU 84	-379	0	10107	0.38	-39.53	0.03
178	SLE RA 1	-263	0	6332	0.14	-26.89	0.01
178	SLE RA 2	-273	0	6276	0.11	-27.71	0.05
178	SLE RA 3	-264	0	6445	0.14	-27.06	0.01
178	SLE RA 4	-270	0	6411	0.12	-27.55	0.03
178	SLE RA 5	-276	0	6358	0.11	-28.05	0.05
178	SLE RA 6	-267	0	6527	0.14	-27.4	0.01
178	SLE RA 7	-273	0	6493	0.12	-27.89	0.03
178	SLE RA 8	-269	0	6496	0.14	-27.56	0.01
178	SLE RA 9	-275	0	6462	0.12	-28.05	0.03
178	SLE RA 10	-282	0	6988	0.2	-29.02	0.04
178	SLE RA 11	-274	0	7157	0.23	-28.37	0
178	SLE RA 12	-279	0	7123	0.21	-28.86	0.03
178	SLE RA 13	-285	0	7070	0.2	-29.36	0.04

Nodo	Cont.	Reazione a traslazione			Reazione a rotazione		
Ind.	N.br.	x	y	z	x	y	z
178	SLE RA 14	-277	0	7239	0.23	-28.71	0
178	SLE RA 15	-282	0	7205	0.21	-29.2	0.03
178	SLE RA 16	-278	0	7208	0.23	-28.87	0
178	SLE RA 17	-284	0	7175	0.21	-29.36	0.03
178	SLE RA 18	-276	0	7350	0.27	-28.76	0
178	SLE RA 19	-282	0	7316	0.25	-29.25	0.02
178	SLE RA 20	-279	0	7432	0.27	-29.1	0
178	SLE RA 21	-285	0	7398	0.25	-29.59	0.02
178	SLE FR 1	-263	0	6332	0.14	-26.89	0.01
178	SLE FR 2	-265	0	6321	0.13	-27.06	0.02
178	SLE FR 3	-264	0	6365	0.14	-27.03	0.01
178	SLE FR 4	-269	0	6626	0.17	-27.62	0.01
178	SLE FR 5	-268	0	6670	0.18	-27.59	0.01
178	SLE FR 6	-270	0	6841	0.21	-27.83	0.01
178	SLE QP 1	-263	0	6332	0.14	-26.89	0.01
178	SLE QP 2	-267	0	6637	0.18	-27.45	0.01
178	SLD 1	382	6	4508	-3.09	44.11	-1
178	SLD 2	382	6	4508	-3.09	44.11	-1
178	SLD 3	434	0	4297	-0.28	50.07	0.57
178	SLD 4	434	0	4297	-0.28	50.07	0.57
178	SLD 5	-152	12	6318	-5.06	-15.01	-2.67
178	SLD 6	-152	12	6318	-5.06	-15.01	-2.67
178	SLD 7	23	-10	5616	4.3	4.83	2.55
178	SLD 8	23	-10	5616	4.3	4.83	2.55
178	SLD 9	-556	10	7659	-3.94	-59.74	-2.54
178	SLD 10	-556	10	7659	-3.94	-59.74	-2.54
178	SLD 11	-382	-12	6957	5.42	-39.89	2.68
178	SLD 12	-382	-12	6957	5.42	-39.89	2.68
178	SLD 13	-968	0	8978	0.64	-104.97	-0.55
178	SLD 14	-968	0	8978	0.64	-104.97	-0.55
178	SLD 15	-916	-6	8767	3.45	-99.02	1.01
178	SLD 16	-916	-6	8767	3.45	-99.02	1.01
178	SLV 1	1204	16	1798	-7.65	134.88	-2.57
178	SLV 2	1204	16	1798	-7.65	134.88	-2.57
178	SLV 3	1328	-1	1298	-0.76	148.95	1.44
178	SLV 4	1328	-1	1298	-0.76	148.95	1.44
178	SLV 5	-14	30	5944	-12.63	-0.09	-6.86
178	SLV 6	-14	30	5944	-12.63	-0.09	-6.86
178	SLV 7	399	-25	4277	10.36	46.81	6.53
178	SLV 8	399	-25	4277	10.36	46.81	6.53
178	SLV 9	-933	25	8998	-10	-101.71	-6.51
178	SLV 10	-933	25	8998	-10	-101.71	-6.51
178	SLV 11	-520	-29	7331	12.99	-54.82	6.87
178	SLV 12	-520	-29	7331	12.99	-54.82	6.87
178	SLV 13	-1862	1	11977	1.12	-203.86	-1.43
178	SLV 14	-1862	1	11977	1.12	-203.86	-1.43
178	SLV 15	-1738	-16	11477	8.01	-189.79	2.59
178	SLV 16	-1738	-16	11477	8.01	-189.79	2.59
179	SLU 1	-1260	1	3621	-0.03	-20.64	0
179	SLU 2	-1262	2	3602	-0.27	-20.99	-0.05
179	SLU 3	-1289	1	3713	-0.03	-21.04	0
179	SLU 4	-1291	2	3702	-0.18	-21.24	-0.03
179	SLU 5	-1287	2	3677	-0.27	-21.4	-0.05
179	SLU 6	-1315	1	3788	-0.03	-21.45	0
179	SLU 7	-1316	2	3776	-0.18	-21.66	-0.03
179	SLU 8	-1311	1	3770	-0.03	-21.47	0
179	SLU 9	-1313	2	3759	-0.18	-21.68	-0.03
179	SLU 10	-1455	2	4197	-0.2	-23.63	-0.03
179	SLU 11	-1483	1	4308	0.05	-23.69	0.01
179	SLU 12	-1484	1	4296	-0.1	-23.89	-0.02
179	SLU 13	-1481	2	4271	-0.2	-24.05	-0.03
179	SLU 14	-1509	1	4382	0.04	-24.1	0.01
179	SLU 15	-1510	1	4371	-0.1	-24.31	-0.02
179	SLU 16	-1505	1	4365	0.04	-24.12	0.01
179	SLU 17	-1506	1	4353	-0.1	-24.32	-0.02
179	SLU 18	-1536	1	4471	0.08	-24.43	0.02
179	SLU 19	-1538	1	4459	-0.07	-24.63	-0.01
179	SLU 20	-1562	1	4545	0.08	-24.84	0.02
179	SLU 21	-1563	1	4534	-0.07	-25.05	-0.01
179	SLU 22	-1436	1	4160	0.02	-23.06	0.01
179	SLU 23	-1437	2	4140	-0.23	-23.4	-0.04
179	SLU 24	-1465	1	4251	0.02	-23.46	0.01
179	SLU 25	-1466	2	4240	-0.13	-23.66	-0.02
179	SLU 26	-1463	2	4215	-0.23	-23.82	-0.04
179	SLU 27	-1491	1	4326	0.01	-23.87	0.01
179	SLU 28	-1492	2	4314	-0.13	-24.08	-0.02
179	SLU 29	-1487	1	4308	0.02	-23.89	0.01
179	SLU 30	-1488	2	4297	-0.13	-24.09	-0.02
179	SLU 31	-1631	2	4735	-0.15	-26.05	-0.03
179	SLU 32	-1659	1	4846	0.09	-26.11	0.02
179	SLU 33	-1660	1	4834	-0.06	-26.31	-0.01
179	SLU 34	-1657	2	4809	-0.16	-26.47	-0.03
179	SLU 35	-1685	1	4920	0.09	-26.52	0.02
179	SLU 36	-1686	1	4909	-0.06	-26.73	-0.01
179	SLU 37	-1681	1	4903	0.09	-26.54	0.02
179	SLU 38	-1682	1	4891	-0.06	-26.74	-0.01
179	SLU 39	-1712	1	5009	0.12	-26.85	0.03
179	SLU 40	-1713	1	4997	-0.02	-27.05	0
179	SLU 41	-1738	1	5083	0.12	-27.26	0.03
179	SLU 42	-1739	1	5072	-0.03	-27.47	0
179	SLU 43	-1577	1	4523	-0.05	-26.01	0

Nodo	Cont.	Reazione a traslazione			Reazione a rotazione		
Ind.	N.br.	x	y	z	x	y	z
179	SLU 44	-1579	2	4504	-0.3	-26.35	-0.05
179	SLU 45	-1607	1	4615	-0.05	-26.4	0
179	SLU 46	-1608	2	4604	-0.2	-26.61	-0.03
179	SLU 47	-1605	2	4578	-0.3	-26.76	-0.05
179	SLU 48	-1633	1	4689	-0.05	-26.82	0
179	SLU 49	-1634	2	4678	-0.2	-27.02	-0.03
179	SLU 50	-1629	1	4672	-0.05	-26.83	0
179	SLU 51	-1630	2	4660	-0.2	-27.04	-0.03
179	SLU 52	-1773	2	5099	-0.22	-29	-0.04
179	SLU 53	-1801	1	5210	0.02	-29.05	0.01
179	SLU 54	-1802	2	5198	-0.13	-29.26	-0.02
179	SLU 55	-1799	2	5173	-0.22	-29.41	-0.04
179	SLU 56	-1827	1	5284	0.02	-29.47	0.01
179	SLU 57	-1828	2	5272	-0.13	-29.67	-0.02
179	SLU 58	-1823	1	5266	0.02	-29.48	0.01
179	SLU 59	-1824	2	5255	-0.13	-29.69	-0.02
179	SLU 60	-1854	1	5373	0.06	-29.79	0.02
179	SLU 61	-1855	2	5361	-0.09	-30	-0.01
179	SLU 62	-1880	1	5447	0.06	-30.21	0.02
179	SLU 63	-1881	2	5435	-0.09	-30.41	-0.01
179	SLU 64	-1753	1	5062	0	-28.43	0.01
179	SLU 65	-1755	2	5042	-0.25	-28.77	-0.04
179	SLU 66	-1783	1	5153	-0.01	-28.82	0
179	SLU 67	-1784	2	5142	-0.16	-29.03	-0.02
179	SLU 68	-1781	2	5117	-0.25	-29.18	-0.04
179	SLU 69	-1809	1	5228	-0.01	-29.23	0
179	SLU 70	-1810	2	5216	-0.16	-29.44	-0.02
179	SLU 71	-1805	1	5210	-0.01	-29.25	0
179	SLU 72	-1806	2	5199	-0.16	-29.46	-0.02
179	SLU 73	-1949	2	5637	-0.18	-31.42	-0.03
179	SLU 74	-1977	1	5748	0.07	-31.47	0.02
179	SLU 75	-1978	2	5736	-0.08	-31.68	-0.01
179	SLU 76	-1975	2	5711	-0.18	-31.83	-0.03
179	SLU 77	-2002	1	5822	0.06	-31.88	0.02
179	SLU 78	-2003	2	5811	-0.08	-32.09	-0.01
179	SLU 79	-1998	1	5805	0.07	-31.9	0.02
179	SLU 80	-2000	2	5793	-0.08	-32.11	-0.01
179	SLU 81	-2030	1	5911	0.1	-32.21	0.03
179	SLU 82	-2031	2	5899	-0.05	-32.42	0
179	SLU 83	-2056	1	5985	0.1	-32.62	0.03
179	SLU 84	-2057	2	5974	-0.05	-32.83	0
179	SLE RA 1	-1310	1	3775	-0.01	-21.33	0
179	SLE RA 2	-1311	2	3762	-0.18	-21.56	-0.03
179	SLE RA 3	-1330	1	3836	-0.02	-21.6	0
179	SLE RA 4	-1330	1	3829	-0.11	-21.74	-0.02
179	SLE RA 5	-1328	2	3812	-0.18	-21.84	-0.03
179	SLE RA 6	-1347	1	3886	-0.02	-21.87	0
179	SLE RA 7	-1348	1	3878	-0.12	-22.01	-0.02
179	SLE RA 8	-1344	1	3874	-0.02	-21.89	0
179	SLE RA 9	-1345	1	3867	-0.11	-22.02	-0.02
179	SLE RA 10	-1440	2	4159	-0.13	-23.33	-0.02
179	SLE RA 11	-1459	1	4233	0.03	-23.36	0.01
179	SLE RA 12	-1460	1	4225	-0.06	-23.5	-0.01
179	SLE RA 13	-1458	2	4208	-0.13	-23.6	-0.02
179	SLE RA 14	-1476	1	4282	0.03	-23.64	0.01
179	SLE RA 15	-1477	1	4275	-0.07	-23.78	-0.01
179	SLE RA 16	-1474	1	4271	0.03	-23.65	0.01
179	SLE RA 17	-1474	1	4263	-0.06	-23.79	-0.01
179	SLE RA 18	-1494	1	4341	0.06	-23.86	0.02
179	SLE RA 19	-1495	1	4334	-0.04	-23.99	0
179	SLE RA 20	-1512	1	4391	0.06	-24.13	0.02
179	SLE RA 21	-1512	1	4383	-0.04	-24.27	0
179	SLE FR 1	-1310	1	3775	-0.01	-21.33	0
179	SLE FR 2	-1310	1	3773	-0.05	-21.38	0
179	SLE FR 3	-1317	1	3795	-0.01	-21.44	0
179	SLE FR 4	-1366	1	3942	-0.03	-22.14	0
179	SLE FR 5	-1372	1	3965	0.01	-22.2	0.01
179	SLE FR 6	-1402	1	4058	0.02	-22.6	0.01
179	SLE QP 1	-1310	1	3775	-0.01	-21.33	0
179	SLE QP 2	-1365	1	3945	0.01	-22.09	0.01
179	SLD 1	-74	-26	1164	1.94	10.02	0.84
179	SLD 2	-74	-26	1164	1.94	10.02	0.84
179	SLD 3	38	15	918	-4.02	12.72	-0.43
179	SLD 4	38	15	918	-4.02	12.72	-0.43
179	SLD 5	-1147	-71	3484	9.63	-16.55	2.17
179	SLD 6	-1147	-71	3484	9.63	-16.55	2.17
179	SLD 7	-776	68	2663	-10.25	-7.56	-2.04
179	SLD 8	-776	68	2663	-10.25	-7.56	-2.04
179	SLD 9	-1955	-67	5227	10.26	-36.63	2.05
179	SLD 10	-1955	-67	5227	10.26	-36.63	2.05
179	SLD 11	-1584	72	4406	-9.62	-27.64	-2.16
179	SLD 12	-1584	72	4406	-9.62	-27.64	-2.16
179	SLD 13	-2768	-14	6972	4.04	-56.9	0.44
179	SLD 14	-2768	-14	6972	4.04	-56.9	0.44
179	SLD 15	-2657	27	6726	-1.92	-54.21	-0.82
179	SLD 16	-2657	27	6726	-1.92	-54.21	-0.82
179	SLV 1	1566	-68	-2368	5.04	50.77	2.12
179	SLV 2	1566	-68	-2368	5.04	50.77	2.12
179	SLV 3	1828	38	-2949	-10.23	57.14	-1.11
179	SLV 4	1828	38	-2949	-10.23	57.14	-1.11
179	SLV 5	-884	-182	2932	24.67	-9.88	5.54

Nodo	Cont.	Reazione a traslazione			Reazione a rotazione		
Ind.	N.br.	x	y	z	x	y	z
179	SLV 6	-884	-182	2932	24.67	-9.88	5.54
179	SLV 7	-9	174	996	-26.22	11.33	-5.23
179	SLV 8	-9	174	996	-26.22	11.33	-5.23
179	SLV 9	-2721	-172	6894	26.24	-55.51	5.24
179	SLV 10	-2721	-172	6894	26.24	-55.51	5.24
179	SLV 11	-1847	183	4958	-24.66	-34.3	-5.53
179	SLV 12	-1847	183	4958	-24.66	-34.3	-5.53
179	SLV 13	-4559	-37	10839	10.25	-101.32	1.12
179	SLV 14	-4559	-37	10839	10.25	-101.32	1.12
179	SLV 15	-4297	69	10258	-5.02	-94.96	-2.11
179	SLV 16	-4297	69	10258	-5.02	-94.96	-2.11
180	SLU 1	1351	-2	2438	0.67	13.56	0.14
180	SLU 2	1233	-1	2230	0.39	12.88	0.15
180	SLU 3	1401	-2	2527	0.69	14.07	0.15
180	SLU 4	1330	-2	2403	0.53	13.66	0.15
180	SLU 5	1263	-1	2283	0.41	13.18	0.16
180	SLU 6	1430	-2	2580	0.71	14.37	0.15
180	SLU 7	1359	-2	2455	0.54	13.96	0.16
180	SLU 8	1409	-2	2543	0.7	14.16	0.15
180	SLU 9	1339	-2	2418	0.53	13.75	0.16
180	SLU 10	1507	-2	2724	0.51	15.67	0.18
180	SLU 11	1674	-2	3021	0.81	16.86	0.17
180	SLU 12	1604	-2	2896	0.64	16.45	0.18
180	SLU 13	1537	-2	2776	0.52	15.97	0.18
180	SLU 14	1704	-2	3073	0.82	17.15	0.18
180	SLU 15	1633	-2	2949	0.65	16.75	0.18
180	SLU 16	1683	-2	3036	0.81	16.94	0.17
180	SLU 17	1613	-2	2912	0.64	16.54	0.18
180	SLU 18	1742	-2	3143	0.83	17.54	0.18
180	SLU 19	1672	-2	3018	0.67	17.13	0.19
180	SLU 20	1771	-2	3195	0.85	17.84	0.18
180	SLU 21	1701	-2	3071	0.68	17.43	0.19
180	SLU 22	1596	-2	2879	0.78	16.03	0.17
180	SLU 23	1479	-2	2672	0.5	15.36	0.18
180	SLU 24	1646	-2	2969	0.8	16.55	0.17
180	SLU 25	1575	-2	2844	0.63	16.14	0.18
180	SLU 26	1508	-2	2724	0.51	15.66	0.18
180	SLU 27	1675	-2	3021	0.81	16.84	0.17
180	SLU 28	1604	-2	2897	0.65	16.44	0.18
180	SLU 29	1655	-2	2984	0.81	16.63	0.17
180	SLU 30	1584	-2	2860	0.64	16.23	0.18
180	SLU 31	1752	-2	3165	0.61	18.14	0.2
180	SLU 32	1920	-2	3462	0.91	19.33	0.2
180	SLU 33	1849	-2	3338	0.75	18.92	0.2
180	SLU 34	1782	-2	3218	0.63	18.44	0.2
180	SLU 35	1949	-2	3515	0.93	19.63	0.2
180	SLU 36	1878	-2	3390	0.76	19.22	0.2
180	SLU 37	1928	-2	3478	0.92	19.42	0.2
180	SLU 38	1858	-2	3353	0.75	19.01	0.2
180	SLU 39	1987	-2	3584	0.94	20.01	0.2
180	SLU 40	1917	-2	3460	0.77	19.61	0.21
180	SLU 41	2017	-2	3637	0.95	20.31	0.2
180	SLU 42	1946	-2	3512	0.79	19.91	0.21
180	SLU 43	1672	-2	3018	0.84	16.78	0.18
180	SLU 44	1555	-2	2811	0.56	16.1	0.19
180	SLU 45	1722	-2	3108	0.86	17.29	0.18
180	SLU 46	1651	-2	2983	0.69	16.88	0.19
180	SLU 47	1584	-2	2863	0.57	16.4	0.19
180	SLU 48	1751	-2	3160	0.87	17.59	0.19
180	SLU 49	1681	-2	3035	0.71	17.18	0.19
180	SLU 50	1731	-2	3123	0.86	17.38	0.18
180	SLU 51	1660	-2	2998	0.7	16.97	0.19
180	SLU 52	1828	-2	3304	0.67	18.89	0.21
180	SLU 53	1996	-3	3601	0.97	20.07	0.21
180	SLU 54	1925	-2	3476	0.81	19.67	0.21
180	SLU 55	1858	-2	3356	0.68	19.19	0.22
180	SLU 56	2025	-3	3653	0.99	20.37	0.21
180	SLU 57	1954	-2	3529	0.82	19.97	0.22
180	SLU 58	2004	-3	3616	0.98	20.16	0.21
180	SLU 59	1934	-2	3492	0.81	19.76	0.22
180	SLU 60	2063	-3	3723	1	20.76	0.21
180	SLU 61	1993	-2	3598	0.83	20.35	0.22
180	SLU 62	2093	-3	3775	1.01	21.06	0.22
180	SLU 63	2022	-2	3651	0.85	20.65	0.22
180	SLU 64	1917	-3	3459	0.94	19.25	0.2
180	SLU 65	1800	-2	3252	0.66	18.58	0.21
180	SLU 66	1967	-3	3549	0.97	19.76	0.2
180	SLU 67	1896	-2	3424	0.8	19.36	0.21
180	SLU 68	1829	-2	3304	0.68	18.88	0.21
180	SLU 69	1996	-3	3601	0.98	20.06	0.21
180	SLU 70	1926	-2	3477	0.81	19.66	0.21
180	SLU 71	1976	-3	3564	0.97	19.85	0.21
180	SLU 72	1905	-2	3440	0.8	19.45	0.21
180	SLU 73	2074	-2	3745	0.78	21.36	0.24
180	SLU 74	2241	-3	4042	1.08	22.55	0.23
180	SLU 75	2170	-2	3918	0.91	22.14	0.24
180	SLU 76	2103	-2	3798	0.79	21.66	0.24
180	SLU 77	2270	-3	4095	1.09	22.85	0.23
180	SLU 78	2200	-3	3970	0.92	22.44	0.24
180	SLU 79	2250	-3	4058	1.08	22.64	0.23
180	SLU 80	2179	-3	3933	0.92	22.23	0.24

Nodo	Cont.	Reazione a traslazione			Reazione a rotazione		
Ind.	N.br.	x	y	z	x	y	z
180	SLU 81	2308	-3	4164	1.11	23.23	0.24
180	SLU 82	2238	-3	4040	0.94	22.83	0.24
180	SLU 83	2338	-3	4217	1.12	23.53	0.24
180	SLU 84	2267	-3	4092	0.95	23.13	0.25
180	SLE RA 1	1421	-2	2564	0.7	14.27	0.15
180	SLE RA 2	1343	-2	2426	0.52	13.82	0.16
180	SLE RA 3	1454	-2	2624	0.72	14.61	0.15
180	SLE RA 4	1407	-2	2541	0.61	14.34	0.16
180	SLE RA 5	1362	-2	2461	0.53	14.02	0.16
180	SLE RA 6	1474	-2	2659	0.73	14.81	0.15
180	SLE RA 7	1427	-2	2576	0.61	14.54	0.16
180	SLE RA 8	1460	-2	2634	0.72	14.67	0.15
180	SLE RA 9	1413	-2	2551	0.61	14.39	0.16
180	SLE RA 10	1525	-2	2755	0.59	15.67	0.17
180	SLE RA 11	1637	-2	2953	0.79	16.46	0.17
180	SLE RA 12	1590	-2	2870	0.68	16.19	0.17
180	SLE RA 13	1545	-2	2790	0.6	15.87	0.18
180	SLE RA 14	1656	-2	2988	0.8	16.66	0.17
180	SLE RA 15	1609	-2	2905	0.69	16.39	0.18
180	SLE RA 16	1643	-2	2963	0.8	16.52	0.17
180	SLE RA 17	1596	-2	2880	0.68	16.25	0.17
180	SLE RA 18	1682	-2	3034	0.81	16.92	0.17
180	SLE RA 19	1635	-2	2951	0.7	16.65	0.18
180	SLE RA 20	1701	-2	3069	0.82	17.12	0.18
180	SLE RA 21	1654	-2	2986	0.71	16.85	0.18
180	SLE FR 1	1421	-2	2564	0.7	14.27	0.15
180	SLE FR 2	1405	-2	2536	0.67	14.18	0.15
180	SLE FR 3	1429	-2	2578	0.71	14.35	0.15
180	SLE FR 4	1483	-2	2677	0.7	14.97	0.16
180	SLE FR 5	1507	-2	2719	0.74	15.14	0.16
180	SLE FR 6	1551	-2	2799	0.76	15.59	0.16
180	SLE QP 1	1421	-2	2564	0.7	14.27	0.15
180	SLE QP 2	1499	-2	2705	0.73	15.06	0.16
180	SLD 1	2306	-21	4252	0.67	25.19	-0.54
180	SLD 2	2306	-21	4252	0.67	25.19	-0.54
180	SLD 3	2572	0	4734	2.04	27.56	0.24
180	SLD 4	2572	0	4734	2.04	27.56	0.24
180	SLD 5	1338	-39	2439	-1.37	14.51	-1.24
180	SLD 6	1338	-39	2439	-1.37	14.51	-1.24
180	SLD 7	2224	30	4044	3.21	22.4	1.37
180	SLD 8	2224	30	4044	3.21	22.4	1.37
180	SLD 9	774	-34	1366	-1.74	7.72	-1.06
180	SLD 10	774	-34	1366	-1.74	7.72	-1.06
180	SLD 11	1660	35	2971	2.83	15.62	1.55
180	SLD 12	1660	35	2971	2.83	15.62	1.55
180	SLD 13	426	-4	677	-0.57	2.57	0.07
180	SLD 14	426	-4	677	-0.57	2.57	0.07
180	SLD 15	692	17	1158	0.8	4.93	0.85
180	SLD 16	692	17	1158	0.8	4.93	0.85
180	SLV 1	3321	-50	6200	0.56	37.97	-1.62
180	SLV 2	3321	-50	6200	0.56	37.97	-1.62
180	SLV 3	3947	4	7332	4.05	43.54	0.4
180	SLV 4	3947	4	7332	4.05	43.54	0.4
180	SLV 5	1097	-98	2036	-4.62	13.48	-3.43
180	SLV 6	1097	-98	2036	-4.62	13.48	-3.43
180	SLV 7	3182	81	5811	7.03	32.06	3.28
180	SLV 8	3182	81	5811	7.03	32.06	3.28
180	SLV 9	-184	-85	-401	-5.56	-1.93	-2.97
180	SLV 10	-184	-85	-401	-5.56	-1.93	-2.97
180	SLV 11	1901	94	3374	6.09	16.64	3.74
180	SLV 12	1901	94	3374	6.09	16.64	3.74
180	SLV 13	-949	-8	-1922	-2.58	-13.42	-0.08
180	SLV 14	-949	-8	-1922	-2.58	-13.42	-0.08
180	SLV 15	-323	46	-789	0.91	-7.84	1.93
180	SLV 16	-323	46	-789	0.91	-7.84	1.93
181	SLU 1	655	-682	7311	21.33	43.56	0.08
181	SLU 2	644	-472	6384	12.13	43.05	0.02
181	SLU 3	681	-704	7566	22.01	45.25	0.08
181	SLU 4	674	-579	7010	16.49	44.95	0.05
181	SLU 5	659	-486	6542	12.55	44	0.02
181	SLU 6	695	-718	7724	22.43	46.2	0.09
181	SLU 7	688	-592	7168	16.91	45.89	0.05
181	SLU 8	684	-710	7627	22.17	45.46	0.08
181	SLU 9	678	-584	7071	16.65	45.15	0.05
181	SLU 10	781	-589	7797	15.57	52.21	0.03
181	SLU 11	817	-821	8978	25.45	54.41	0.09
181	SLU 12	810	-695	8422	19.93	54.1	0.06
181	SLU 13	795	-603	7955	15.99	53.16	0.03
181	SLU 14	831	-835	9136	25.87	55.35	0.1
181	SLU 15	825	-709	8580	20.35	55.05	0.06
181	SLU 16	821	-827	9039	25.61	54.61	0.1
181	SLU 17	814	-701	8483	20.09	54.31	0.06
181	SLU 18	850	-849	9328	26.25	56.64	0.1
181	SLU 19	844	-723	8772	20.73	56.33	0.06
181	SLU 20	865	-863	9486	26.67	57.59	0.1
181	SLU 21	858	-737	8931	21.15	57.28	0.06
181	SLU 22	776	-791	8589	24.57	51.63	0.09
181	SLU 23	765	-581	7662	15.38	51.12	0.03
181	SLU 24	801	-813	8843	25.25	53.32	0.09
181	SLU 25	794	-687	8287	19.74	53.02	0.06
181	SLU 26	779	-595	7820	15.8	52.07	0.03

Nodo	Cont.	Reazione a traslazione			Reazione a rotazione		
Ind.	N.br.	x	y	z	x	y	z
181	SLU 27	815	-827	9001	25.67	54.27	0.1
181	SLU 28	809	-701	8446	20.15	53.97	0.06
181	SLU 29	805	-818	8905	25.41	53.53	0.09
181	SLU 30	798	-693	8349	19.89	53.22	0.06
181	SLU 31	901	-698	9074	18.82	60.28	0.04
181	SLU 32	937	-930	10256	28.69	62.48	0.11
181	SLU 33	931	-804	9700	23.18	62.17	0.07
181	SLU 34	915	-712	9232	19.24	61.23	0.04
181	SLU 35	952	-944	10414	29.11	63.43	0.11
181	SLU 36	945	-818	9858	23.59	63.12	0.07
181	SLU 37	941	-935	10317	28.85	62.68	0.11
181	SLU 38	934	-809	9761	23.33	62.38	0.07
181	SLU 39	970	-958	10606	29.49	64.71	0.11
181	SLU 40	964	-832	10050	23.97	64.41	0.07
181	SLU 41	985	-971	10764	29.91	65.66	0.11
181	SLU 42	978	-846	10208	24.39	65.35	0.07
181	SLU 43	811	-850	9066	26.62	53.87	0.1
181	SLU 44	800	-640	8140	17.42	53.36	0.04
181	SLU 45	836	-872	9321	27.3	55.55	0.1
181	SLU 46	829	-746	8765	21.78	55.25	0.07
181	SLU 47	814	-654	8298	17.84	54.3	0.04
181	SLU 48	850	-886	9479	27.72	56.5	0.11
181	SLU 49	844	-760	8923	22.2	56.2	0.07
181	SLU 50	840	-877	9382	27.46	55.76	0.1
181	SLU 51	833	-751	8826	21.94	55.46	0.07
181	SLU 52	936	-757	9552	20.86	62.51	0.05
181	SLU 53	972	-989	10733	30.74	64.71	0.12
181	SLU 54	966	-863	10177	25.22	64.4	0.08
181	SLU 55	950	-770	9710	21.28	63.46	0.05
181	SLU 56	987	-1003	10891	31.16	65.66	0.12
181	SLU 57	980	-877	10335	25.64	65.35	0.08
181	SLU 58	976	-994	10794	30.9	64.91	0.12
181	SLU 59	969	-868	10238	25.38	64.61	0.08
181	SLU 60	1005	-1016	11083	31.53	66.94	0.12
181	SLU 61	999	-891	10528	26.02	66.64	0.08
181	SLU 62	1020	-1030	11242	31.95	67.89	0.12
181	SLU 63	1013	-904	10686	26.44	67.58	0.08
181	SLU 64	931	-958	10344	29.86	61.94	0.11
181	SLU 65	920	-748	9417	20.66	61.43	0.05
181	SLU 66	956	-980	10598	30.54	63.63	0.12
181	SLU 67	950	-855	10043	25.02	63.32	0.08
181	SLU 68	934	-762	9575	21.08	62.37	0.05
181	SLU 69	971	-994	10757	30.96	64.57	0.12
181	SLU 70	964	-868	10201	25.44	64.27	0.08
181	SLU 71	960	-986	10660	30.7	63.83	0.12
181	SLU 72	953	-860	10104	25.18	63.53	0.08
181	SLU 73	1056	-865	10830	24.1	70.58	0.06
181	SLU 74	1093	-1097	12011	33.98	72.78	0.13
181	SLU 75	1086	-971	11455	28.46	72.47	0.09
181	SLU 76	1071	-879	10988	24.52	71.53	0.06
181	SLU 77	1107	-1111	12169	34.4	73.73	0.13
181	SLU 78	1100	-985	11613	28.88	73.42	0.09
181	SLU 79	1096	-1103	12072	34.14	72.99	0.13
181	SLU 80	1090	-977	11516	28.62	72.68	0.09
181	SLU 81	1126	-1125	12361	34.78	75.01	0.13
181	SLU 82	1119	-999	11805	29.26	74.71	0.09
181	SLU 83	1140	-1139	12519	35.2	75.96	0.13
181	SLU 84	1134	-1013	11963	29.68	75.66	0.09
181	SLE RA 1	690	-713	7676	22.26	45.87	0.08
181	SLE RA 2	682	-573	7058	16.13	45.53	0.04
181	SLE RA 3	707	-728	7846	22.71	47	0.09
181	SLE RA 4	702	-644	7475	19.03	46.79	0.06
181	SLE RA 5	692	-583	7164	16.41	46.16	0.04
181	SLE RA 6	716	-737	7951	22.99	47.63	0.09
181	SLE RA 7	712	-653	7581	19.31	47.42	0.06
181	SLE RA 8	709	-732	7887	22.82	47.13	0.09
181	SLE RA 9	705	-648	7516	19.14	46.93	0.06
181	SLE RA 10	773	-651	8000	18.42	51.63	0.05
181	SLE RA 11	797	-806	8787	25	53.1	0.09
181	SLE RA 12	793	-722	8417	21.33	52.89	0.07
181	SLE RA 13	783	-660	8105	18.7	52.26	0.05
181	SLE RA 14	807	-815	8893	25.28	53.73	0.09
181	SLE RA 15	803	-731	8522	21.61	53.53	0.07
181	SLE RA 16	800	-810	8828	25.11	53.24	0.09
181	SLE RA 17	795	-726	8458	21.43	53.03	0.07
181	SLE RA 18	820	-824	9021	25.53	54.59	0.09
181	SLE RA 19	815	-740	8650	21.86	54.38	0.07
181	SLE RA 20	829	-834	9126	25.81	55.22	0.1
181	SLE RA 21	825	-750	8756	22.14	55.02	0.07
181	SLE FR 1	690	-713	7676	22.26	45.87	0.08
181	SLE FR 2	688	-685	7552	21.03	45.8	0.08
181	SLE FR 3	694	-717	7718	22.37	46.12	0.08
181	SLE FR 4	727	-719	7956	22.01	48.42	0.08
181	SLE FR 5	733	-750	8122	23.35	48.74	0.09
181	SLE FR 6	755	-769	8348	23.9	50.23	0.09
181	SLE QP 1	690	-713	7676	22.26	45.87	0.08
181	SLE QP 2	729	-747	8079	23.24	48.48	0.09
181	SLD 1	1365	-747	9621	24.35	95.66	-0.29
181	SLD 2	1365	-747	9621	24.35	95.66	-0.29
181	SLD 3	1472	-1043	11156	37.12	102.85	0.14
181	SLD 4	1472	-1043	11156	37.12	102.85	0.14

Nodo	Cont.	Reazione a traslazione			Reazione a rotazione		
Ind.	N.br.	x	y	z	x	y	z
181	SLD 5	757	-298	6212	4.21	51.74	-0.67
181	SLD 6	757	-298	6212	4.21	51.74	-0.67
181	SLD 7	1114	-1284	11332	46.77	75.7	0.75
181	SLD 8	1114	-1284	11332	46.77	75.7	0.75
181	SLD 9	343	-209	4827	-0.29	21.27	-0.57
181	SLD 10	343	-209	4827	-0.29	21.27	-0.57
181	SLD 11	700	-1195	9946	42.28	45.23	0.84
181	SLD 12	700	-1195	9946	42.28	45.23	0.84
181	SLD 13	-15	-450	5002	9.37	-5.88	0.04
181	SLD 14	-15	-450	5002	9.37	-5.88	0.04
181	SLD 15	93	-746	6538	22.14	1.31	0.46
181	SLD 16	93	-746	6538	22.14	1.31	0.46
181	SLV 1	2169	-759	11540	26.15	155.36	-0.86
181	SLV 2	2169	-759	11540	26.15	155.36	-0.86
181	SLV 3	2422	-1455	15153	56.16	172.26	0.23
181	SLV 4	2422	-1455	15153	56.16	172.26	0.23
181	SLV 5	778	305	3637	-21.4	54.9	-1.84
181	SLV 6	778	305	3637	-21.4	54.9	-1.84
181	SLV 7	1619	-2014	15682	78.63	111.26	1.78
181	SLV 8	1619	-2014	15682	78.63	111.26	1.78
181	SLV 9	-162	521	477	-32.14	-14.29	-1.6
181	SLV 10	-162	521	477	-32.14	-14.29	-1.6
181	SLV 11	679	-1798	12521	67.88	42.07	2.02
181	SLV 12	679	-1798	12521	67.88	42.07	2.02
181	SLV 13	-964	-39	1005	-9.68	-75.29	-0.05
181	SLV 14	-964	-39	1005	-9.68	-75.29	-0.05
181	SLV 15	-712	-734	4619	20.33	-58.39	1.03
181	SLV 16	-712	-734	4619	20.33	-58.39	1.03
182	SLU 1	582	-7	6085	2.37	44.7	0.1
182	SLU 2	698	-4	5580	1.25	44.29	0.1
182	SLU 3	607	-7	6296	2.45	46.5	0.1
182	SLU 4	676	-6	5994	1.78	46.26	0.1
182	SLU 5	711	-5	5716	1.3	45.24	0.1
182	SLU 6	620	-7	6432	2.5	47.45	0.11
182	SLU 7	690	-6	6129	1.83	47.21	0.1
182	SLU 8	608	-7	6356	2.47	46.59	0.1
182	SLU 9	678	-6	6053	1.8	46.35	0.1
182	SLU 10	829	-6	6768	1.67	53.79	0.12
182	SLU 11	738	-8	7484	2.87	56	0.12
182	SLU 12	807	-7	7181	2.2	55.76	0.12
182	SLU 13	842	-6	6904	1.72	54.74	0.12
182	SLU 14	751	-9	7619	2.92	56.95	0.13
182	SLU 15	821	-7	7317	2.25	56.7	0.12
182	SLU 16	739	-8	7543	2.89	56.09	0.12
182	SLU 17	809	-7	7241	2.22	55.85	0.12
182	SLU 18	769	-9	7781	2.97	58.27	0.13
182	SLU 19	839	-7	7479	2.3	58.02	0.13
182	SLU 20	782	-9	7917	3.02	59.22	0.13
182	SLU 21	852	-7	7614	2.35	58.97	0.13
182	SLU 22	694	-8	7155	2.76	53.01	0.12
182	SLU 23	810	-5	6650	1.64	52.6	0.12
182	SLU 24	718	-8	7366	2.84	54.82	0.12
182	SLU 25	788	-7	7064	2.17	54.57	0.12
182	SLU 26	823	-6	6786	1.69	53.55	0.12
182	SLU 27	732	-8	7502	2.89	55.77	0.12
182	SLU 28	801	-7	7199	2.22	55.52	0.12
182	SLU 29	720	-8	7426	2.86	54.91	0.12
182	SLU 30	790	-7	7123	2.19	54.66	0.12
182	SLU 31	940	-7	7838	2.06	62.1	0.14
182	SLU 32	849	-10	8554	3.26	64.32	0.14
182	SLU 33	919	-8	8251	2.59	64.07	0.14
182	SLU 34	954	-7	7973	2.11	63.05	0.14
182	SLU 35	862	-10	8689	3.31	65.27	0.14
182	SLU 36	932	-8	8387	2.64	65.02	0.14
182	SLU 37	851	-10	8613	3.28	64.41	0.14
182	SLU 38	920	-8	8311	2.61	64.16	0.14
182	SLU 39	880	-10	8851	3.36	66.59	0.15
182	SLU 40	950	-8	8548	2.69	66.34	0.15
182	SLU 41	894	-10	8987	3.41	67.53	0.15
182	SLU 42	963	-8	8684	2.74	67.29	0.15
182	SLU 43	718	-9	7543	2.95	55.26	0.12
182	SLU 44	834	-6	7039	1.83	54.85	0.12
182	SLU 45	743	-9	7755	3.03	57.06	0.13
182	SLU 46	813	-7	7452	2.36	56.82	0.13
182	SLU 47	848	-6	7175	1.88	55.79	0.12
182	SLU 48	756	-9	7890	3.08	58.01	0.13
182	SLU 49	826	-8	7588	2.41	57.76	0.13
182	SLU 50	745	-9	7815	3.05	57.15	0.13
182	SLU 51	814	-7	7512	2.38	56.91	0.13
182	SLU 52	965	-7	8226	2.25	64.35	0.14
182	SLU 53	874	-10	8942	3.45	66.56	0.15
182	SLU 54	944	-9	8640	2.78	66.32	0.15
182	SLU 55	978	-7	8362	2.3	65.29	0.14
182	SLU 56	887	-10	9078	3.5	67.51	0.15
182	SLU 57	957	-9	8775	2.83	67.26	0.15
182	SLU 58	876	-10	9002	3.47	66.65	0.15
182	SLU 59	945	-9	8699	2.8	66.41	0.15
182	SLU 60	905	-10	9240	3.55	68.83	0.15
182	SLU 61	975	-9	8937	2.88	68.58	0.15
182	SLU 62	918	-11	9375	3.6	69.78	0.15
182	SLU 63	988	-9	9073	2.93	69.53	0.15

Nodo	Cont.	Reazione a traslazione			Reazione a rotazione		
Ind.	N.br.	x	y	z	x	y	z
182	SLU 64	830	-10	8613	3.34	63.57	0.14
182	SLU 65	946	-7	8109	2.22	63.16	0.14
182	SLU 66	855	-10	8825	3.42	65.38	0.15
182	SLU 67	924	-8	8522	2.75	65.13	0.14
182	SLU 68	959	-7	8245	2.27	64.11	0.14
182	SLU 69	868	-10	8960	3.47	66.33	0.15
182	SLU 70	938	-9	8658	2.8	66.08	0.15
182	SLU 71	856	-10	8884	3.44	65.47	0.15
182	SLU 72	926	-9	8582	2.77	65.22	0.14
182	SLU 73	1077	-8	9296	2.64	72.66	0.16
182	SLU 74	986	-11	10012	3.84	74.88	0.17
182	SLU 75	1055	-10	9710	3.17	74.63	0.16
182	SLU 76	1090	-9	9432	2.69	73.61	0.16
182	SLU 77	999	-11	10148	3.89	75.83	0.17
182	SLU 78	1068	-10	9845	3.22	75.58	0.17
182	SLU 79	987	-11	10072	3.86	74.97	0.17
182	SLU 80	1057	-10	9769	3.18	74.72	0.17
182	SLU 81	1017	-12	10310	3.94	77.14	0.17
182	SLU 82	1086	-10	10007	3.27	76.9	0.17
182	SLU 83	1030	-12	10445	3.99	78.09	0.17
182	SLU 84	1100	-10	10143	3.31	77.85	0.17
182	SLE RA 1	614	-7	6390	2.48	47.07	0.11
182	SLE RA 2	691	-6	6054	1.74	46.8	0.1
182	SLE RA 3	630	-7	6531	2.54	48.28	0.11
182	SLE RA 4	677	-6	6330	2.09	48.11	0.11
182	SLE RA 5	700	-6	6145	1.77	47.43	0.11
182	SLE RA 6	639	-8	6622	2.57	48.91	0.11
182	SLE RA 7	686	-7	6420	2.12	48.75	0.11
182	SLE RA 8	631	-8	6571	2.55	48.34	0.11
182	SLE RA 9	678	-6	6370	2.1	48.17	0.11
182	SLE RA 10	778	-6	6846	2.02	53.13	0.12
182	SLE RA 11	718	-8	7323	2.82	54.61	0.12
182	SLE RA 12	764	-7	7121	2.37	54.45	0.12
182	SLE RA 13	787	-6	6936	2.05	53.77	0.12
182	SLE RA 14	726	-8	7414	2.85	55.24	0.12
182	SLE RA 15	773	-7	7212	2.4	55.08	0.12
182	SLE RA 16	719	-8	7363	2.83	54.67	0.12
182	SLE RA 17	765	-7	7161	2.38	54.51	0.12
182	SLE RA 18	738	-8	7521	2.88	56.12	0.12
182	SLE RA 19	785	-7	7320	2.43	55.96	0.12
182	SLE RA 20	747	-9	7612	2.91	56.75	0.13
182	SLE RA 21	794	-7	7410	2.47	56.59	0.12
182	SLE FR 1	614	-7	6390	2.48	47.07	0.11
182	SLE FR 2	629	-7	6323	2.33	47.02	0.11
182	SLE FR 3	617	-7	6427	2.5	47.33	0.11
182	SLE FR 4	667	-7	6662	2.45	49.73	0.11
182	SLE FR 5	655	-8	6766	2.62	50.04	0.11
182	SLE FR 6	676	-8	6956	2.68	51.6	0.11
182	SLE QP 1	614	-7	6390	2.48	47.07	0.11
182	SLE QP 2	651	-8	6730	2.6	49.79	0.11
182	SLD 1	1883	3	7488	-4.53	117.27	0.93
182	SLD 2	1883	3	7488	-4.53	117.27	0.93
182	SLD 3	1774	-6	8396	3.79	126.7	-0.01
182	SLD 4	1774	-6	8396	3.79	126.7	-0.01
182	SLD 5	1185	9	5579	-12.16	55.74	1.79
182	SLD 6	1185	9	5579	-12.16	55.74	1.79
182	SLD 7	823	-21	8608	15.58	87.16	-1.36
182	SLD 8	823	-21	8608	15.58	87.16	-1.36
182	SLD 9	479	5	4852	-10.38	12.42	1.58
182	SLD 10	479	5	4852	-10.38	12.42	1.58
182	SLD 11	117	-24	7880	17.37	43.84	-1.57
182	SLD 12	117	-24	7880	17.37	43.84	-1.57
182	SLD 13	-471	-9	5063	1.42	-27.12	0.24
182	SLD 14	-471	-9	5063	1.42	-27.12	0.24
182	SLD 15	-580	-18	5971	9.74	-17.7	-0.71
182	SLD 16	-580	-18	5971	9.74	-17.7	-0.71
182	SLV 1	3457	19	8425	-15.44	202.73	2.19
182	SLV 2	3457	19	8425	-15.44	202.73	2.19
182	SLV 3	3200	-4	10564	5.85	224.9	-0.23
182	SLV 4	3200	-4	10564	5.85	224.9	-0.23
182	SLV 5	1884	35	3994	-35.1	62.04	4.41
182	SLV 6	1884	35	3994	-35.1	62.04	4.41
182	SLV 7	1025	-41	11124	35.86	135.95	-3.67
182	SLV 8	1025	-41	11124	35.86	135.95	-3.67
182	SLV 9	277	25	2335	-30.66	-36.37	3.89
182	SLV 10	277	25	2335	-30.66	-36.37	3.89
182	SLV 11	-581	-50	9465	40.31	37.54	-4.19
182	SLV 12	-581	-50	9465	40.31	37.54	-4.19
182	SLV 13	-1897	-12	2895	-0.64	-125.32	0.46
182	SLV 14	-1897	-12	2895	-0.64	-125.32	0.46
182	SLV 15	-2155	-34	5034	20.65	-103.15	-1.97
182	SLV 16	-2155	-34	5034	20.65	-103.15	-1.97
183	SLU 1	585	-1	6167	1.14	29.87	-0.05
183	SLU 2	654	-1	5766	0.49	32.13	-0.03
183	SLU 3	611	-1	6382	1.18	31.18	-0.05
183	SLU 4	653	-1	6141	0.79	32.54	-0.04
183	SLU 5	667	-1	5907	0.51	32.75	-0.03
183	SLU 6	624	-1	6522	1.21	31.8	-0.05
183	SLU 7	665	-1	6282	0.82	33.16	-0.04
183	SLU 8	610	-1	6448	1.19	31.11	-0.05
183	SLU 9	652	-1	6208	0.8	32.47	-0.04

Nodo	Cont.	Reazione a traslazione			Reazione a rotazione		
Ind.	N.br.	x	y	z	x	y	z
183	SLU 10	784	-1	6970	0.72	38.78	-0.04
183	SLU 11	741	-1	7585	1.41	37.83	-0.05
183	SLU 12	783	-1	7345	1.02	39.18	-0.04
183	SLU 13	797	-1	7110	0.74	39.4	-0.04
183	SLU 14	754	-1	7726	1.43	38.45	-0.06
183	SLU 15	795	-1	7485	1.04	39.81	-0.04
183	SLU 16	740	-1	7652	1.42	37.76	-0.05
183	SLU 17	782	-1	7411	1.03	39.12	-0.04
183	SLU 18	770	-1	7886	1.46	39.37	-0.06
183	SLU 19	812	-1	7646	1.07	40.73	-0.05
183	SLU 20	783	-1	8027	1.49	39.99	-0.06
183	SLU 21	825	-1	7786	1.1	41.35	-0.05
183	SLU 22	696	-1	7250	1.34	35.58	-0.05
183	SLU 23	765	-1	6849	0.69	37.84	-0.03
183	SLU 24	722	-1	7465	1.38	36.89	-0.05
183	SLU 25	763	-1	7225	1	38.24	-0.04
183	SLU 26	778	-1	6990	0.72	38.46	-0.04
183	SLU 27	735	-1	7606	1.41	37.51	-0.05
183	SLU 28	776	-1	7365	1.02	38.86	-0.04
183	SLU 29	721	-1	7531	1.39	36.82	-0.05
183	SLU 30	763	-1	7291	1	38.18	-0.04
183	SLU 31	895	-1	8053	0.92	44.49	-0.04
183	SLU 32	852	-1	8669	1.61	43.54	-0.06
183	SLU 33	893	-1	8428	1.22	44.89	-0.05
183	SLU 34	907	-1	8194	0.95	45.11	-0.04
183	SLU 35	864	-1	8809	1.64	44.16	-0.06
183	SLU 36	906	-1	8569	1.25	45.51	-0.05
183	SLU 37	851	-1	8735	1.62	43.47	-0.06
183	SLU 38	892	-1	8494	1.23	44.83	-0.05
183	SLU 39	881	-1	8970	1.67	45.08	-0.06
183	SLU 40	923	-1	8729	1.28	46.44	-0.05
183	SLU 41	894	-1	9110	1.69	45.7	-0.06
183	SLU 42	935	-1	8870	1.3	47.06	-0.05
183	SLU 43	723	-1	7646	1.41	36.88	-0.06
183	SLU 44	792	-1	7245	0.76	39.14	-0.04
183	SLU 45	749	-1	7861	1.45	38.18	-0.06
183	SLU 46	790	-1	7620	1.06	39.54	-0.05
183	SLU 47	805	-1	7386	0.79	39.76	-0.04
183	SLU 48	761	-1	8001	1.48	38.8	-0.06
183	SLU 49	803	-1	7761	1.09	40.16	-0.05
183	SLU 50	748	-1	7927	1.46	38.12	-0.06
183	SLU 51	789	-1	7686	1.07	39.47	-0.05
183	SLU 52	922	-1	8449	0.99	45.79	-0.05
183	SLU 53	879	-1	9064	1.68	44.83	-0.07
183	SLU 54	920	-1	8824	1.29	46.19	-0.05
183	SLU 55	934	-1	8589	1.01	46.41	-0.05
183	SLU 56	891	-2	9205	1.7	45.45	-0.07
183	SLU 57	933	-1	8964	1.31	46.81	-0.06
183	SLU 58	878	-1	9130	1.69	44.77	-0.07
183	SLU 59	919	-1	8890	1.3	46.12	-0.06
183	SLU 60	908	-2	9365	1.73	46.38	-0.07
183	SLU 61	950	-1	9125	1.34	47.73	-0.06
183	SLU 62	921	-2	9506	1.76	47	-0.07
183	SLU 63	962	-1	9265	1.37	48.35	-0.06
183	SLU 64	833	-1	8729	1.61	42.59	-0.06
183	SLU 65	903	-1	8328	0.96	44.85	-0.05
183	SLU 66	859	-1	8944	1.66	43.89	-0.06
183	SLU 67	901	-1	8703	1.27	45.25	-0.05
183	SLU 68	915	-1	8469	0.99	45.47	-0.05
183	SLU 69	872	-2	9084	1.68	44.51	-0.07
183	SLU 70	914	-1	8844	1.29	45.87	-0.06
183	SLU 71	859	-1	9010	1.66	43.83	-0.07
183	SLU 72	900	-1	8770	1.27	45.18	-0.05
183	SLU 73	1032	-1	9532	1.19	51.5	-0.05
183	SLU 74	989	-2	10147	1.88	50.54	-0.07
183	SLU 75	1031	-1	9907	1.49	51.9	-0.06
183	SLU 76	1045	-1	9672	1.22	52.12	-0.05
183	SLU 77	1002	-2	10288	1.91	51.16	-0.07
183	SLU 78	1043	-1	10047	1.52	52.52	-0.06
183	SLU 79	988	-2	10214	1.89	50.48	-0.07
183	SLU 80	1030	-1	9973	1.5	51.83	-0.06
183	SLU 81	1019	-2	10448	1.94	52.08	-0.07
183	SLU 82	1060	-1	10208	1.55	53.44	-0.06
183	SLU 83	1031	-2	10589	1.96	52.7	-0.08
183	SLU 84	1073	-1	10348	1.57	54.06	-0.06
183	SLE RA 1	617	-1	6476	1.2	31.5	-0.05
183	SLE RA 2	663	-1	6209	0.76	33.01	-0.04
183	SLE RA 3	634	-1	6620	1.22	32.37	-0.05
183	SLE RA 4	662	-1	6459	0.96	33.28	-0.04
183	SLE RA 5	671	-1	6303	0.78	33.42	-0.04
183	SLE RA 6	643	-1	6713	1.24	32.79	-0.05
183	SLE RA 7	670	-1	6553	0.98	33.69	-0.04
183	SLE RA 8	633	-1	6664	1.23	32.33	-0.05
183	SLE RA 9	661	-1	6504	0.97	33.24	-0.04
183	SLE RA 10	749	-1	7012	0.92	37.44	-0.04
183	SLE RA 11	721	-1	7422	1.38	36.81	-0.05
183	SLE RA 12	748	-1	7262	1.12	37.71	-0.05
183	SLE RA 13	758	-1	7105	0.93	37.86	-0.04
183	SLE RA 14	729	-1	7516	1.39	37.22	-0.05
183	SLE RA 15	757	-1	7355	1.13	38.13	-0.05
183	SLE RA 16	720	-1	7466	1.38	36.76	-0.05

Nodo	Cont.	Reazione a traslazione			Reazione a rotazione		
Ind.	N.br.	x	y	z	x	y	z
183	SLE RA 17	748	-1	7306	1.12	37.67	-0.05
183	SLE RA 18	740	-1	7623	1.41	37.84	-0.05
183	SLE RA 19	768	-1	7462	1.15	38.74	-0.05
183	SLE RA 20	749	-1	7716	1.43	38.25	-0.06
183	SLE RA 21	776	-1	7556	1.17	39.15	-0.05
183	SLE FR 1	617	-1	6476	1.2	31.5	-0.05
183	SLE FR 2	626	-1	6423	1.11	31.81	-0.04
183	SLE FR 3	620	-1	6514	1.2	31.67	-0.05
183	SLE FR 4	663	-1	6767	1.17	33.7	-0.05
183	SLE FR 5	657	-1	6858	1.27	33.57	-0.05
183	SLE FR 6	678	-1	7050	1.3	34.67	-0.05
183	SLE QP 1	617	-1	6476	1.2	31.5	-0.05
183	SLE QP 2	654	-1	6820	1.26	33.4	-0.05
183	SLD 1	2098	10	7165	-10.21	104.21	0.4
183	SLD 2	2098	10	7165	-10.21	104.21	0.4
183	SLD 3	2226	2	7931	3.59	111.07	-0.17
183	SLD 4	2226	2	7931	3.59	111.07	-0.17
183	SLD 5	893	15	5761	-23.11	44.24	0.95
183	SLD 6	893	15	5761	-23.11	44.24	0.95
183	SLD 7	1320	-13	8317	22.89	67.11	-0.95
183	SLD 8	1320	-13	8317	22.89	67.11	-0.95
183	SLD 9	-12	11	5324	-20.37	-0.3	0.85
183	SLD 10	-12	11	5324	-20.37	-0.3	0.85
183	SLD 11	415	-17	7880	25.63	22.57	-1.05
183	SLD 12	415	-17	7880	25.63	22.57	-1.05
183	SLD 13	-919	-4	5709	-1.06	-44.26	0.07
183	SLD 14	-919	-4	5709	-1.06	-44.26	0.07
183	SLD 15	-791	-12	6476	12.74	-37.4	-0.5
183	SLD 16	-791	-12	6476	12.74	-37.4	-0.5
183	SLV 1	3931	27	7582	-27.93	194.02	1.09
183	SLV 2	3931	27	7582	-27.93	194.02	1.09
183	SLV 3	4234	6	9388	7.45	210.2	-0.36
183	SLV 4	4234	6	9388	7.45	210.2	-0.36
183	SLV 5	1178	40	4310	-61.16	57.04	2.5
183	SLV 6	1178	40	4310	-61.16	57.04	2.5
183	SLV 7	2187	-32	10329	56.78	110.99	-2.35
183	SLV 8	2187	-32	10329	56.78	110.99	-2.35
183	SLV 9	-880	29	3312	-54.26	-44.18	2.25
183	SLV 10	-880	29	3312	-54.26	-44.18	2.25
183	SLV 11	130	-42	9330	63.68	9.76	-2.6
183	SLV 12	130	-42	9330	63.68	9.76	-2.6
183	SLV 13	-2927	-8	4253	-4.93	-143.39	0.26
183	SLV 14	-2927	-8	4253	-4.93	-143.39	0.26
183	SLV 15	-2624	-29	6059	30.45	-127.21	-1.19
183	SLV 16	-2624	-29	6059	30.45	-127.21	-1.19
184	SLU 1	399	-1	6274	0.79	17.34	-0.01
184	SLU 2	454	0	5950	0.27	19.2	-0.01
184	SLU 3	419	-1	6494	0.82	18.18	-0.01
184	SLU 4	452	0	6300	0.51	19.29	-0.01
184	SLU 5	462	0	6097	0.29	19.53	-0.01
184	SLU 6	427	-1	6641	0.83	18.51	-0.01
184	SLU 7	460	0	6446	0.52	19.62	-0.01
184	SLU 8	415	-1	6567	0.82	18	-0.01
184	SLU 9	448	0	6373	0.51	19.12	-0.01
184	SLU 10	545	0	7174	0.44	23.13	-0.01
184	SLU 11	509	-1	7718	0.99	22.11	-0.02
184	SLU 12	542	0	7523	0.68	23.22	-0.01
184	SLU 13	553	0	7320	0.46	23.46	-0.01
184	SLU 14	517	-1	7864	1.01	22.44	-0.02
184	SLU 15	550	0	7670	0.7	23.55	-0.01
184	SLU 16	505	-1	7791	1	21.93	-0.02
184	SLU 17	539	0	7596	0.69	23.05	-0.01
184	SLU 18	528	-1	8022	1.04	22.95	-0.02
184	SLU 19	561	0	7828	0.73	24.07	-0.01
184	SLU 20	536	-1	8169	1.05	23.28	-0.02
184	SLU 21	569	0	7974	0.74	24.4	-0.01
184	SLU 22	474	-1	7375	0.94	20.64	-0.02
184	SLU 23	530	0	7051	0.42	22.49	-0.01
184	SLU 24	494	-1	7595	0.97	21.47	-0.02
184	SLU 25	528	0	7400	0.66	22.59	-0.01
184	SLU 26	538	0	7197	0.44	22.83	-0.01
184	SLU 27	502	-1	7741	0.98	21.81	-0.02
184	SLU 28	536	0	7547	0.67	22.92	-0.01
184	SLU 29	490	-1	7668	0.97	21.3	-0.02
184	SLU 30	524	0	7473	0.66	22.41	-0.01
184	SLU 31	620	0	8274	0.59	26.42	-0.01
184	SLU 32	585	-1	8818	1.14	25.4	-0.02
184	SLU 33	618	-1	8624	0.83	26.52	-0.02
184	SLU 34	628	0	8421	0.61	26.76	-0.01
184	SLU 35	593	-1	8965	1.16	25.74	-0.02
184	SLU 36	626	-1	8771	0.85	26.85	-0.02
184	SLU 37	581	-1	8891	1.15	25.23	-0.02
184	SLU 38	614	-1	8697	0.84	26.34	-0.02
184	SLU 39	604	-1	9123	1.19	26.25	-0.02
184	SLU 40	637	-1	8928	0.88	27.37	-0.02
184	SLU 41	612	-1	9269	1.2	26.58	-0.02
184	SLU 42	645	-1	9075	0.89	27.7	-0.02
184	SLU 43	493	-1	7779	0.97	21.41	-0.02
184	SLU 44	548	0	7455	0.45	23.27	-0.01
184	SLU 45	513	-1	7999	1	22.25	-0.02
184	SLU 46	546	0	7805	0.69	23.36	-0.01

Nodo	Cont.	Reazione a traslazione			Reazione a rotazione		
Ind.	N.br.	x	y	z	x	y	z
184	SLU 47	556	0	7601	0.47	23.6	-0.01
184	SLU 48	521	-1	8146	1.02	22.58	-0.02
184	SLU 49	554	0	7951	0.71	23.69	-0.01
184	SLU 50	509	-1	8072	1.01	22.07	-0.02
184	SLU 51	542	0	7877	0.7	23.19	-0.01
184	SLU 52	638	0	8678	0.63	27.2	-0.01
184	SLU 53	603	-1	9223	1.18	26.18	-0.02
184	SLU 54	636	-1	9028	0.87	27.29	-0.02
184	SLU 55	646	0	8825	0.65	27.53	-0.02
184	SLU 56	611	-1	9369	1.19	26.51	-0.02
184	SLU 57	644	-1	9175	0.88	27.62	-0.02
184	SLU 58	599	-1	9295	1.18	26	-0.02
184	SLU 59	632	-1	9101	0.87	27.12	-0.02
184	SLU 60	622	-1	9527	1.22	27.02	-0.02
184	SLU 61	655	-1	9332	0.91	28.14	-0.02
184	SLU 62	630	-1	9673	1.24	27.36	-0.02
184	SLU 63	663	-1	9479	0.93	28.47	-0.02
184	SLU 64	568	-1	8879	1.12	24.71	-0.02
184	SLU 65	623	0	8555	0.6	26.57	-0.01
184	SLU 66	588	-1	9100	1.15	25.55	-0.02
184	SLU 67	621	-1	8905	0.84	26.66	-0.02
184	SLU 68	632	0	8702	0.62	26.9	-0.01
184	SLU 69	596	-1	9246	1.17	25.88	-0.02
184	SLU 70	629	-1	9052	0.86	26.99	-0.02
184	SLU 71	584	-1	9172	1.16	25.37	-0.02
184	SLU 72	617	-1	8978	0.85	26.49	-0.02
184	SLU 73	714	0	9779	0.78	30.49	-0.02
184	SLU 74	678	-1	10323	1.33	29.48	-0.02
184	SLU 75	712	-1	10129	1.02	30.59	-0.02
184	SLU 76	722	-1	9926	0.8	30.83	-0.02
184	SLU 77	687	-1	10470	1.34	29.81	-0.02
184	SLU 78	720	-1	10275	1.03	30.92	-0.02
184	SLU 79	675	-1	10396	1.33	29.3	-0.02
184	SLU 80	708	-1	10202	1.02	30.42	-0.02
184	SLU 81	697	-1	10627	1.37	30.32	-0.02
184	SLU 82	730	-1	10433	1.06	31.44	-0.02
184	SLU 83	705	-1	10774	1.39	30.65	-0.02
184	SLU 84	739	-1	10580	1.08	31.77	-0.02
184	SLE RA 1	420	-1	6588	0.83	18.28	-0.01
184	SLE RA 2	457	0	6372	0.48	19.52	-0.01
184	SLE RA 3	434	-1	6735	0.85	18.84	-0.01
184	SLE RA 4	456	0	6606	0.64	19.58	-0.01
184	SLE RA 5	463	0	6470	0.5	19.74	-0.01
184	SLE RA 6	439	-1	6833	0.86	19.06	-0.01
184	SLE RA 7	461	0	6703	0.65	19.8	-0.01
184	SLE RA 8	431	-1	6784	0.85	18.72	-0.01
184	SLE RA 9	453	0	6654	0.65	19.47	-0.01
184	SLE RA 10	518	0	7188	0.6	22.14	-0.01
184	SLE RA 11	494	-1	7551	0.97	21.46	-0.02
184	SLE RA 12	516	-1	7421	0.76	22.2	-0.01
184	SLE RA 13	523	0	7286	0.61	22.36	-0.01
184	SLE RA 14	499	-1	7649	0.98	21.68	-0.02
184	SLE RA 15	521	-1	7519	0.77	22.42	-0.01
184	SLE RA 16	491	-1	7600	0.97	21.34	-0.02
184	SLE RA 17	514	-1	7470	0.76	22.09	-0.01
184	SLE RA 18	507	-1	7754	1	22.02	-0.02
184	SLE RA 19	529	-1	7624	0.79	22.77	-0.01
184	SLE RA 20	512	-1	7851	1.01	22.25	-0.02
184	SLE RA 21	534	-1	7722	0.8	22.99	-0.02
184	SLE FR 1	420	-1	6588	0.83	18.28	-0.01
184	SLE FR 2	428	-1	6545	0.76	18.53	-0.01
184	SLE FR 3	423	-1	6628	0.83	18.37	-0.01
184	SLE FR 4	454	-1	6895	0.81	19.65	-0.01
184	SLE FR 5	448	-1	6977	0.88	19.49	-0.01
184	SLE FR 6	463	-1	7171	0.91	20.15	-0.02
184	SLE QP 1	420	-1	6588	0.83	18.28	-0.01
184	SLE QP 2	446	-1	6938	0.88	19.4	-0.01
184	SLD 1	1956	16	6955	-15.34	82.92	0.06
184	SLD 2	1956	16	6955	-15.34	82.92	0.06
184	SLD 3	2095	-2	7629	5.2	88.96	-0.24
184	SLD 4	2095	-2	7629	5.2	88.96	-0.24
184	SLD 5	689	32	5920	-35.13	29.29	0.47
184	SLD 6	689	32	5920	-35.13	29.29	0.47
184	SLD 7	1151	-28	8169	33.32	49.44	-0.54
184	SLD 8	1151	-28	8169	33.32	49.44	-0.54
184	SLD 9	-258	27	5707	-31.56	-10.63	0.51
184	SLD 10	-258	27	5707	-31.56	-10.63	0.51
184	SLD 11	203	-33	7956	36.89	9.52	-0.5
184	SLD 12	203	-33	7956	36.89	9.52	-0.5
184	SLD 13	-1202	1	6247	-3.44	-50.15	0.21
184	SLD 14	-1202	1	6247	-3.44	-50.15	0.21
184	SLD 15	-1064	-18	6921	17.09	-44.11	-0.09
184	SLD 16	-1064	-18	6921	17.09	-44.11	-0.09
184	SLV 1	3872	42	6970	-40.45	163.49	0.18
184	SLV 2	3872	42	6970	-40.45	163.49	0.18
184	SLV 3	4199	-4	8559	12.21	177.74	-0.59
184	SLV 4	4199	-4	8559	12.21	177.74	-0.59
184	SLV 5	979	83	4537	-91.39	41.02	1.22
184	SLV 6	979	83	4537	-91.39	41.02	1.22
184	SLV 7	2068	-72	9835	84.14	88.51	-1.37
184	SLV 8	2068	-72	9835	84.14	88.51	-1.37

Nodo	Cont.	Reazione a traslazione			Reazione a rotazione		
Ind.	N.br.	x	y	z	x	y	z
184	SLV 9	-1175	71	4042	-82.39	-49.7	1.34
184	SLV 10	-1175	71	4042	-82.39	-49.7	1.34
184	SLV 11	-86	-84	9339	93.15	-2.21	-1.25
184	SLV 12	-86	-84	9339	93.15	-2.21	-1.25
184	SLV 13	-3307	3	5317	-10.45	-138.93	0.56
184	SLV 14	-3307	3	5317	-10.45	-138.93	0.56
184	SLV 15	-2980	-44	6906	42.21	-124.68	-0.21
184	SLV 16	-2980	-44	6906	42.21	-124.68	-0.21
185	SLU 1	343	0	6391	0.67	12.53	0.02
185	SLU 2	395	0	6117	0.25	14.59	0.02
185	SLU 3	361	0	6617	0.7	13.23	0.02
185	SLU 4	393	0	6453	0.44	14.47	0.02
185	SLU 5	402	0	6269	0.26	14.79	0.02
185	SLU 6	368	0	6770	0.71	13.44	0.02
185	SLU 7	399	0	6605	0.46	14.67	0.02
185	SLU 8	357	0	6696	0.7	12.94	0.02
185	SLU 9	388	0	6531	0.45	14.18	0.02
185	SLU 10	474	0	7362	0.42	17.49	0.02
185	SLU 11	441	-1	7863	0.87	16.13	0.03
185	SLU 12	472	0	7698	0.61	17.37	0.02
185	SLU 13	481	0	7514	0.43	17.69	0.02
185	SLU 14	448	-1	8015	0.88	16.34	0.03
185	SLU 15	479	0	7851	0.63	17.57	0.02
185	SLU 16	436	-1	7941	0.87	15.84	0.03
185	SLU 17	467	0	7777	0.62	17.07	0.02
185	SLU 18	456	-1	8170	0.91	16.67	0.03
185	SLU 19	488	0	8005	0.66	17.91	0.03
185	SLU 20	463	-1	8322	0.93	16.87	0.03
185	SLU 21	495	0	8158	0.67	18.11	0.03
185	SLU 22	408	-1	7511	0.8	14.87	0.03
185	SLU 23	461	0	7236	0.38	16.93	0.02
185	SLU 24	427	-1	7737	0.83	15.57	0.03
185	SLU 25	458	0	7573	0.58	16.81	0.02
185	SLU 26	468	0	7389	0.4	17.14	0.02
185	SLU 27	434	-1	7890	0.85	15.78	0.03
185	SLU 28	465	0	7725	0.59	17.02	0.02
185	SLU 29	422	-1	7816	0.84	15.28	0.03
185	SLU 30	454	0	7651	0.58	16.52	0.02
185	SLU 31	540	0	8482	0.55	19.83	0.02
185	SLU 32	506	-1	8983	1	18.47	0.03
185	SLU 33	538	0	8818	0.75	19.71	0.03
185	SLU 34	547	0	8634	0.57	20.04	0.02
185	SLU 35	513	-1	9135	1.02	18.68	0.03
185	SLU 36	545	0	8971	0.76	19.92	0.03
185	SLU 37	502	-1	9061	1.01	18.18	0.03
185	SLU 38	533	0	8897	0.75	19.42	0.03
185	SLU 39	522	-1	9290	1.05	19.01	0.03
185	SLU 40	553	-1	9125	0.79	20.25	0.03
185	SLU 41	529	-1	9442	1.06	19.22	0.03
185	SLU 42	560	-1	9278	0.81	20.45	0.03
185	SLU 43	423	-1	7924	0.82	15.48	0.03
185	SLU 44	475	0	7650	0.4	17.54	0.02
185	SLU 45	441	-1	8151	0.85	16.19	0.03
185	SLU 46	473	0	7986	0.6	17.42	0.02
185	SLU 47	482	0	7802	0.42	17.75	0.02
185	SLU 48	448	-1	8303	0.87	16.39	0.03
185	SLU 49	480	0	8139	0.61	17.63	0.03
185	SLU 50	437	-1	8229	0.86	15.89	0.03
185	SLU 51	468	0	8065	0.6	17.13	0.02
185	SLU 52	555	0	8895	0.57	20.44	0.03
185	SLU 53	521	-1	9396	1.02	19.09	0.03
185	SLU 54	552	-1	9231	0.77	20.32	0.03
185	SLU 55	562	0	9048	0.59	20.65	0.03
185	SLU 56	528	-1	9549	1.04	19.29	0.03
185	SLU 57	559	-1	9384	0.78	20.53	0.03
185	SLU 58	516	-1	9474	1.02	18.79	0.03
185	SLU 59	548	-1	9310	0.77	20.03	0.03
185	SLU 60	537	-1	9703	1.07	19.62	0.04
185	SLU 61	568	-1	9539	0.81	20.86	0.03
185	SLU 62	543	-1	9856	1.08	19.83	0.04
185	SLU 63	575	-1	9691	0.83	21.07	0.03
185	SLU 64	489	-1	9044	0.96	17.82	0.03
185	SLU 65	541	0	8770	0.54	19.89	0.02
185	SLU 66	507	-1	9271	0.99	18.53	0.03
185	SLU 67	539	0	9106	0.73	19.77	0.03
185	SLU 68	548	0	8922	0.55	20.09	0.03
185	SLU 69	514	-1	9423	1	18.73	0.03
185	SLU 70	545	-1	9259	0.75	19.97	0.03
185	SLU 71	503	-1	9349	0.99	18.24	0.03
185	SLU 72	534	0	9185	0.74	19.47	0.03
185	SLU 73	620	0	10015	0.71	22.79	0.03
185	SLU 74	587	-1	10516	1.15	21.43	0.04
185	SLU 75	618	-1	10351	0.9	22.67	0.03
185	SLU 76	627	0	10168	0.72	22.99	0.03
185	SLU 77	594	-1	10669	1.17	21.63	0.04
185	SLU 78	625	-1	10504	0.92	22.87	0.03
185	SLU 79	582	-1	10594	1.16	21.13	0.04
185	SLU 80	613	-1	10430	0.91	22.37	0.03
185	SLU 81	602	-1	10823	1.2	21.97	0.04
185	SLU 82	634	-1	10658	0.95	23.2	0.03
185	SLU 83	609	-1	10976	1.22	22.17	0.04

Nodo	Cont.	Reazione a traslazione			Reazione a rotazione		
Ind.	N.br.	x	y	z	x	y	z
185	SLU 84	641	-1	10811	0.96	23.41	0.04
185	SLE RA 1	362	0	6711	0.71	13.2	0.02
185	SLE RA 2	396	0	6528	0.43	14.57	0.02
185	SLE RA 3	374	0	6862	0.73	13.67	0.02
185	SLE RA 4	395	0	6752	0.56	14.49	0.02
185	SLE RA 5	401	0	6630	0.44	14.71	0.02
185	SLE RA 6	378	-1	6964	0.74	13.8	0.02
185	SLE RA 7	399	0	6854	0.57	14.63	0.02
185	SLE RA 8	371	0	6914	0.73	13.47	0.02
185	SLE RA 9	392	0	6804	0.56	14.3	0.02
185	SLE RA 10	449	0	7358	0.54	16.5	0.02
185	SLE RA 11	427	-1	7692	0.84	15.6	0.03
185	SLE RA 12	448	0	7582	0.67	16.42	0.02
185	SLE RA 13	454	0	7460	0.55	16.64	0.02
185	SLE RA 14	431	-1	7794	0.85	15.74	0.03
185	SLE RA 15	452	0	7684	0.68	16.56	0.03
185	SLE RA 16	424	-1	7744	0.84	15.4	0.03
185	SLE RA 17	445	0	7635	0.67	16.23	0.02
185	SLE RA 18	437	-1	7897	0.87	15.96	0.03
185	SLE RA 19	458	0	7787	0.7	16.78	0.03
185	SLE RA 20	442	-1	7998	0.88	16.09	0.03
185	SLE RA 21	463	0	7889	0.71	16.92	0.03
185	SLE FR 1	362	0	6711	0.71	13.2	0.02
185	SLE FR 2	368	0	6674	0.65	13.47	0.02
185	SLE FR 3	363	0	6751	0.71	13.25	0.02
185	SLE FR 4	391	0	7030	0.7	14.3	0.02
185	SLE FR 5	386	-1	7107	0.76	14.08	0.03
185	SLE FR 6	399	-1	7304	0.79	14.58	0.03
185	SLE QP 1	362	0	6711	0.71	13.2	0.02
185	SLE QP 2	384	-1	7066	0.76	14.02	0.03
185	SLD 1	1908	20	6490	-19.68	87.43	-0.63
185	SLD 2	1908	20	6490	-19.68	87.43	-0.63
185	SLD 3	2051	-5	7119	7.58	94.4	0.28
185	SLD 4	2051	-5	7119	7.58	94.4	0.28
185	SLD 5	625	43	5939	-46.72	25.47	-1.55
185	SLD 6	625	43	5939	-46.72	25.47	-1.55
185	SLD 7	1101	-40	8036	44.15	48.72	1.48
185	SLD 8	1101	-40	8036	44.15	48.72	1.48
185	SLD 9	-333	38	6097	-42.63	-20.67	-1.43
185	SLD 10	-333	38	6097	-42.63	-20.67	-1.43
185	SLD 11	144	-44	8194	48.23	2.58	1.6
185	SLD 12	144	-44	8194	48.23	2.58	1.6
185	SLD 13	-1283	4	7014	-6.07	-66.36	-0.23
185	SLD 14	-1283	4	7014	-6.07	-66.36	-0.23
185	SLD 15	-1140	-21	7643	21.19	-59.38	0.68
185	SLD 16	-1140	-21	7643	21.19	-59.38	0.68
185	SLV 1	3842	51	5691	-51.45	180.56	-1.65
185	SLV 2	3842	51	5691	-51.45	180.56	-1.65
185	SLV 3	4179	-13	7172	18.46	197	0.68
185	SLV 4	4179	-13	7172	18.46	197	0.68
185	SLV 5	910	111	4407	-120.93	39.06	-4.02
185	SLV 6	910	111	4407	-120.93	39.06	-4.02
185	SLV 7	2034	-101	9345	112.09	93.84	3.76
185	SLV 8	2034	-101	9345	112.09	93.84	3.76
185	SLV 9	-1265	100	4788	-110.58	-65.79	-3.71
185	SLV 10	-1265	100	4788	-110.58	-65.79	-3.71
185	SLV 11	-142	-112	9726	122.44	-11.02	4.07
185	SLV 12	-142	-112	9726	122.44	-11.02	4.07
185	SLV 13	-3410	12	6961	-16.95	-168.95	-0.63
185	SLV 14	-3410	12	6961	-16.95	-168.95	-0.63
185	SLV 15	-3073	-52	8442	52.96	-152.51	1.7
185	SLV 16	-3073	-52	8442	52.96	-152.51	1.7
186	SLU 1	143	0	6533	0.68	5.73	-0.01
186	SLU 2	193	0	6302	0.31	8.06	-0.01
186	SLU 3	155	0	6768	0.7	6.22	-0.01
186	SLU 4	184	0	6629	0.48	7.62	-0.01
186	SLU 5	196	0	6462	0.32	8.09	-0.01
186	SLU 6	157	0	6928	0.72	6.26	-0.01
186	SLU 7	187	0	6790	0.5	7.65	-0.01
186	SLU 8	148	0	6853	0.71	5.8	-0.01
186	SLU 9	178	0	6715	0.49	7.19	-0.01
186	SLU 10	228	0	7570	0.49	9.61	-0.02
186	SLU 11	189	0	8036	0.88	7.77	-0.01
186	SLU 12	219	0	7898	0.66	9.17	-0.01
186	SLU 13	230	0	7730	0.5	9.64	-0.02
186	SLU 14	192	0	8197	0.9	7.81	-0.01
186	SLU 15	222	0	8058	0.68	9.2	-0.01
186	SLU 16	183	0	8122	0.89	7.35	-0.01
186	SLU 17	213	0	7983	0.67	8.74	-0.01
186	SLU 18	193	-1	8345	0.93	7.95	-0.01
186	SLU 19	223	0	8206	0.71	9.35	-0.02
186	SLU 20	195	-1	8505	0.95	7.98	-0.01
186	SLU 21	225	0	8366	0.73	9.38	-0.02
186	SLU 22	169	0	7674	0.81	6.84	-0.01
186	SLU 23	219	0	7443	0.44	9.16	-0.01
186	SLU 24	181	0	7909	0.84	7.33	-0.01
186	SLU 25	210	0	7770	0.62	8.72	-0.01
186	SLU 26	222	0	7603	0.46	9.2	-0.01
186	SLU 27	183	0	8069	0.86	7.36	-0.01
186	SLU 28	213	0	7931	0.63	8.76	-0.01
186	SLU 29	174	0	7995	0.85	6.91	-0.01

Nodo	Cont.	Reazione a traslazione			Reazione a rotazione		
Ind.	N.br.	x	y	z	x	y	z
186	SLU 30	204	0	7856	0.62	8.3	-0.01
186	SLU 31	254	0	8711	0.62	10.72	-0.02
186	SLU 32	215	-1	9177	1.02	8.88	-0.01
186	SLU 33	245	0	9039	0.8	10.28	-0.02
186	SLU 34	256	0	8872	0.64	10.75	-0.02
186	SLU 35	218	-1	9338	1.04	8.92	-0.01
186	SLU 36	248	0	9199	0.81	10.31	-0.02
186	SLU 37	209	-1	9263	1.03	8.46	-0.01
186	SLU 38	239	0	9124	0.8	9.85	-0.02
186	SLU 39	219	-1	9486	1.07	9.06	-0.02
186	SLU 40	249	0	9347	0.85	10.45	-0.02
186	SLU 41	221	-1	9646	1.09	9.09	-0.02
186	SLU 42	251	0	9508	0.86	10.49	-0.02
186	SLU 43	177	0	8101	0.83	7.07	-0.01
186	SLU 44	227	0	7870	0.46	9.4	-0.01
186	SLU 45	189	0	8336	0.86	7.56	-0.01
186	SLU 46	219	0	8198	0.64	8.96	-0.01
186	SLU 47	230	0	8031	0.48	9.43	-0.02
186	SLU 48	191	0	8497	0.87	7.6	-0.01
186	SLU 49	221	0	8358	0.65	8.99	-0.01
186	SLU 50	182	0	8422	0.86	7.14	-0.01
186	SLU 51	212	0	8283	0.64	8.53	-0.01
186	SLU 52	262	0	9138	0.64	10.95	-0.02
186	SLU 53	223	-1	9605	1.04	9.12	-0.02
186	SLU 54	253	0	9466	0.82	10.51	-0.02
186	SLU 55	264	0	9299	0.66	10.98	-0.02
186	SLU 56	226	-1	9765	1.05	9.15	-0.02
186	SLU 57	256	0	9626	0.83	10.54	-0.02
186	SLU 58	217	-1	9690	1.04	8.69	-0.02
186	SLU 59	247	0	9552	0.82	10.09	-0.02
186	SLU 60	227	-1	9913	1.09	9.29	-0.02
186	SLU 61	257	0	9774	0.87	10.69	-0.02
186	SLU 62	230	-1	10073	1.1	9.32	-0.02
186	SLU 63	259	0	9935	0.88	10.72	-0.02
186	SLU 64	203	-1	9242	0.97	8.18	-0.01
186	SLU 65	253	0	9011	0.6	10.5	-0.02
186	SLU 66	215	-1	9477	1	8.67	-0.01
186	SLU 67	245	0	9339	0.77	10.06	-0.02
186	SLU 68	256	0	9172	0.62	10.54	-0.02
186	SLU 69	217	-1	9638	1.01	8.7	-0.01
186	SLU 70	247	0	9499	0.79	10.1	-0.02
186	SLU 71	208	-1	9563	1	8.25	-0.01
186	SLU 72	238	0	9424	0.78	9.64	-0.02
186	SLU 73	288	0	10280	0.78	12.06	-0.02
186	SLU 74	249	-1	10746	1.18	10.22	-0.02
186	SLU 75	279	0	10607	0.95	11.62	-0.02
186	SLU 76	290	0	10440	0.8	12.09	-0.02
186	SLU 77	252	-1	10906	1.19	10.26	-0.02
186	SLU 78	282	0	10768	0.97	11.65	-0.02
186	SLU 79	243	-1	10831	1.18	9.8	-0.02
186	SLU 80	273	0	10693	0.96	11.19	-0.02
186	SLU 81	253	-1	11054	1.23	10.4	-0.02
186	SLU 82	283	-1	10916	1	11.79	-0.02
186	SLU 83	256	-1	11215	1.24	10.43	-0.02
186	SLU 84	285	-1	11076	1.02	11.83	-0.02
186	SLE RA 1	151	0	6859	0.72	6.05	-0.01
186	SLE RA 2	184	0	6705	0.47	7.6	-0.01
186	SLE RA 3	158	0	7015	0.73	6.38	-0.01
186	SLE RA 4	178	0	6923	0.59	7.31	-0.01
186	SLE RA 5	186	0	6812	0.48	7.62	-0.01
186	SLE RA 6	160	0	7122	0.74	6.4	-0.01
186	SLE RA 7	180	0	7030	0.6	7.33	-0.01
186	SLE RA 8	154	0	7073	0.74	6.09	-0.01
186	SLE RA 9	174	0	6980	0.59	7.02	-0.01
186	SLE RA 10	207	0	7550	0.59	8.63	-0.01
186	SLE RA 11	181	0	7861	0.85	7.41	-0.01
186	SLE RA 12	201	0	7769	0.7	8.34	-0.01
186	SLE RA 13	209	0	7657	0.6	8.66	-0.01
186	SLE RA 14	183	0	7968	0.86	7.43	-0.01
186	SLE RA 15	203	0	7876	0.72	8.36	-0.01
186	SLE RA 16	177	0	7918	0.86	7.13	-0.01
186	SLE RA 17	197	0	7826	0.71	8.06	-0.01
186	SLE RA 18	184	0	8067	0.89	7.53	-0.01
186	SLE RA 19	204	0	7974	0.74	8.46	-0.01
186	SLE RA 20	185	0	8174	0.9	7.55	-0.01
186	SLE RA 21	205	0	8081	0.75	8.48	-0.01
186	SLE FR 1	151	0	6859	0.72	6.05	-0.01
186	SLE FR 2	157	0	6828	0.67	6.36	-0.01
186	SLE FR 3	151	0	6901	0.72	6.06	-0.01
186	SLE FR 4	167	0	7190	0.72	6.8	-0.01
186	SLE FR 5	161	0	7264	0.77	6.5	-0.01
186	SLE FR 6	167	0	7463	0.8	6.79	-0.01
186	SLE QP 1	151	0	6859	0.72	6.05	-0.01
186	SLE QP 2	161	0	7221	0.77	6.49	-0.01
186	SLD 1	1612	24	6413	-7.7	87.36	0.09
186	SLD 2	1612	24	6413	-7.7	87.36	0.09
186	SLD 3	1751	-8	7014	23.37	94.76	-0.41
186	SLD 4	1751	-8	7014	23.37	94.76	-0.41
186	SLD 5	385	54	6066	-48.89	19.54	0.77
186	SLD 6	385	54	6066	-48.89	19.54	0.77
186	SLD 7	849	-50	8071	54.67	44.19	-0.88

Nodo	Cont.	Reazione a traslazione			Reazione a rotazione		
Ind.	N.br.	x	y	z	x	y	z
186	SLD 8	849	-50	8071	54.67	44.19	-0.88
186	SLD 9	-527	49	6371	-53.13	-31.2	0.86
186	SLD 10	-527	49	6371	-53.13	-31.2	0.86
186	SLD 11	-64	-55	8376	50.43	-6.55	-0.8
186	SLD 12	-64	-55	8376	50.43	-6.55	-0.8
186	SLD 13	-1430	7	7428	-21.83	-81.77	0.39
186	SLD 14	-1430	7	7428	-21.83	-81.77	0.39
186	SLD 15	-1291	-25	8029	9.23	-74.38	-0.11
186	SLD 16	-1291	-25	8029	9.23	-74.38	-0.11
186	SLV 1	3454	61	5323	-21.07	189.99	0.25
186	SLV 2	3454	61	5323	-21.07	189.99	0.25
186	SLV 3	3781	-19	6739	58.6	207.41	-1.03
186	SLV 4	3781	-19	6739	58.6	207.41	-1.03
186	SLV 5	652	140	4504	-126.62	35.11	2
186	SLV 6	652	140	4504	-126.62	35.11	2
186	SLV 7	1744	-128	9224	138.95	93.2	-2.25
186	SLV 8	1744	-128	9224	138.95	93.2	-2.25
186	SLV 9	-1422	127	5218	-137.42	-80.21	2.23
186	SLV 10	-1422	127	5218	-137.42	-80.21	2.23
186	SLV 11	-331	-141	9938	128.15	-22.12	-2.02
186	SLV 12	-331	-141	9938	128.15	-22.12	-2.02
186	SLV 13	-3460	18	7703	-57.07	-194.42	1
186	SLV 14	-3460	18	7703	-57.07	-194.42	1
186	SLV 15	-3132	-62	9119	22.61	-177	-0.27
186	SLV 16	-3132	-62	9119	22.61	-177	-0.27
187	SLU 1	-31	0	6716	0.72	-4.32	-0.01
187	SLU 2	13	0	6511	0.42	-2.33	-0.01
187	SLU 3	-27	0	6962	0.74	-4.24	-0.01
187	SLU 4	0	0	6839	0.57	-3.05	-0.01
187	SLU 5	11	0	6681	0.44	-2.54	-0.01
187	SLU 6	-28	0	7131	0.76	-4.46	-0.01
187	SLU 7	-2	0	7009	0.58	-3.26	-0.01
187	SLU 8	-35	0	7055	0.75	-4.75	-0.01
187	SLU 9	-9	0	6933	0.57	-3.55	-0.01
187	SLU 10	11	0	7815	0.61	-2.9	-0.01
187	SLU 11	-29	0	8265	0.94	-4.81	-0.01
187	SLU 12	-2	0	8143	0.76	-3.62	-0.01
187	SLU 13	9	0	7985	0.63	-3.12	-0.01
187	SLU 14	-31	-1	8435	0.95	-5.03	-0.01
187	SLU 15	-4	0	8313	0.78	-3.83	-0.01
187	SLU 16	-37	0	8359	0.94	-5.32	-0.01
187	SLU 17	-11	0	8236	0.77	-4.13	-0.01
187	SLU 18	-34	-1	8578	0.99	-5.14	-0.01
187	SLU 19	-8	0	8456	0.81	-3.95	-0.01
187	SLU 20	-36	-1	8748	1.01	-5.35	-0.01
187	SLU 21	-10	0	8625	0.83	-4.16	-0.01
187	SLU 22	-38	0	7890	0.86	-5.08	-0.01
187	SLU 23	6	0	7686	0.56	-3.09	-0.01
187	SLU 24	-33	0	8136	0.89	-5	-0.01
187	SLU 25	-7	0	8013	0.71	-3.81	-0.01
187	SLU 26	4	0	7855	0.58	-3.31	-0.01
187	SLU 27	-35	0	8306	0.91	-5.22	-0.01
187	SLU 28	-9	0	8183	0.73	-4.02	-0.01
187	SLU 29	-41	0	8230	0.9	-5.51	-0.01
187	SLU 30	-15	0	8107	0.72	-4.32	-0.01
187	SLU 31	4	0	8989	0.76	-3.67	-0.01
187	SLU 32	-35	-1	9440	1.08	-5.58	-0.01
187	SLU 33	-9	0	9317	0.9	-4.38	-0.01
187	SLU 34	2	0	9159	0.77	-3.88	-0.01
187	SLU 35	-37	-1	9610	1.1	-5.79	-0.01
187	SLU 36	-11	0	9487	0.92	-4.6	-0.01
187	SLU 37	-44	-1	9534	1.09	-6.08	-0.01
187	SLU 38	-17	0	9411	0.91	-4.89	-0.01
187	SLU 39	-41	-1	9753	1.13	-5.9	-0.01
187	SLU 40	-14	0	9630	0.96	-4.71	-0.01
187	SLU 41	-43	-1	9923	1.15	-6.12	-0.01
187	SLU 42	-16	0	9800	0.97	-4.92	-0.01
187	SLU 43	-38	0	8328	0.88	-5.36	-0.01
187	SLU 44	6	0	8123	0.59	-3.37	-0.01
187	SLU 45	-34	0	8574	0.91	-5.28	-0.01
187	SLU 46	-7	0	8451	0.73	-4.08	-0.01
187	SLU 47	4	0	8293	0.6	-3.58	-0.01
187	SLU 48	-36	0	8743	0.93	-5.49	-0.01
187	SLU 49	-9	0	8621	0.75	-4.3	-0.01
187	SLU 50	-42	0	8667	0.92	-5.78	-0.01
187	SLU 51	-16	0	8545	0.74	-4.59	-0.01
187	SLU 52	3	0	9427	0.78	-3.94	-0.01
187	SLU 53	-36	-1	9878	1.1	-5.85	-0.01
187	SLU 54	-9	0	9755	0.92	-4.66	-0.01
187	SLU 55	2	0	9597	0.79	-4.15	-0.01
187	SLU 56	-38	-1	10047	1.12	-6.06	-0.01
187	SLU 57	-11	0	9925	0.94	-4.87	-0.01
187	SLU 58	-44	-1	9971	1.11	-6.36	-0.01
187	SLU 59	-18	0	9848	0.93	-5.16	-0.01
187	SLU 60	-41	-1	10190	1.16	-6.18	-0.01
187	SLU 61	-15	0	10068	0.98	-4.98	-0.01
187	SLU 62	-43	-1	10360	1.17	-6.39	-0.01
187	SLU 63	-17	0	10238	1	-5.19	-0.01
187	SLU 64	-45	-1	9502	1.03	-6.12	-0.01
187	SLU 65	-1	0	9298	0.73	-4.13	-0.01
187	SLU 66	-40	-1	9748	1.05	-6.04	-0.01

Nodo	Cont.	Reazione a traslazione			Reazione a rotazione		
Ind.	N.br.	x	y	z	x	y	z
187	SLU 67	-14	0	9625	0.88	-4.84	-0.01
187	SLU 68	-3	0	9467	0.75	-4.34	-0.01
187	SLU 69	-42	-1	9918	1.07	-6.25	-0.01
187	SLU 70	-16	0	9795	0.89	-5.06	-0.01
187	SLU 71	-49	-1	9842	1.06	-6.55	-0.01
187	SLU 72	-22	0	9719	0.88	-5.35	-0.01
187	SLU 73	-3	0	10601	0.92	-4.7	-0.01
187	SLU 74	-42	-1	11052	1.25	-6.61	-0.01
187	SLU 75	-16	-1	10929	1.07	-5.42	-0.01
187	SLU 76	-5	0	10771	0.94	-4.91	-0.01
187	SLU 77	-44	-1	11222	1.26	-6.83	-0.01
187	SLU 78	-18	-1	11099	1.08	-5.63	-0.01
187	SLU 79	-51	-1	11146	1.25	-7.12	-0.01
187	SLU 80	-24	-1	11023	1.07	-5.92	-0.01
187	SLU 81	-48	-1	11365	1.3	-6.94	-0.01
187	SLU 82	-21	-1	11242	1.12	-5.74	-0.01
187	SLU 83	-50	-1	11535	1.32	-7.15	-0.01
187	SLU 84	-23	-1	11412	1.14	-5.96	-0.01
187	SLE RA 1	-33	0	7051	0.76	-4.54	-0.01
187	SLE RA 2	-4	0	6915	0.56	-3.21	-0.01
187	SLE RA 3	-30	0	7215	0.78	-4.49	-0.01
187	SLE RA 4	-12	0	7133	0.66	-3.69	-0.01
187	SLE RA 5	-5	0	7028	0.57	-3.35	-0.01
187	SLE RA 6	-31	0	7328	0.79	-4.63	-0.01
187	SLE RA 7	-14	0	7247	0.67	-3.83	-0.01
187	SLE RA 8	-36	0	7278	0.78	-4.82	-0.01
187	SLE RA 9	-18	0	7196	0.66	-4.03	-0.01
187	SLE RA 10	-5	0	7784	0.69	-3.59	-0.01
187	SLE RA 11	-31	0	8084	0.9	-4.87	-0.01
187	SLE RA 12	-14	0	8003	0.79	-4.07	-0.01
187	SLE RA 13	-6	0	7897	0.7	-3.74	-0.01
187	SLE RA 14	-33	0	8198	0.92	-5.01	-0.01
187	SLE RA 15	-15	0	8116	0.8	-4.21	-0.01
187	SLE RA 16	-37	0	8147	0.91	-5.21	-0.01
187	SLE RA 17	-19	0	8065	0.79	-4.41	-0.01
187	SLE RA 18	-35	0	8293	0.94	-5.09	-0.01
187	SLE RA 19	-17	0	8211	0.82	-4.29	-0.01
187	SLE RA 20	-36	-1	8406	0.95	-5.23	-0.01
187	SLE RA 21	-19	0	8324	0.83	-4.43	-0.01
187	SLE FR 1	-33	0	7051	0.76	-4.54	-0.01
187	SLE FR 2	-27	0	7024	0.72	-4.27	-0.01
187	SLE FR 3	-34	0	7096	0.76	-4.6	-0.01
187	SLE FR 4	-28	0	7396	0.77	-4.44	-0.01
187	SLE FR 5	-34	0	7469	0.82	-4.76	-0.01
187	SLE FR 6	-34	0	7672	0.85	-4.81	-0.01
187	SLE QP 1	-33	0	7051	0.76	-4.54	-0.01
187	SLE QP 2	-34	0	7424	0.81	-4.7	-0.01
187	SLD 1	1345	8	6239	-8.62	67.31	0
187	SLD 2	1345	8	6239	-8.62	67.31	0
187	SLD 3	1473	-24	6825	23.84	73.53	-0.21
187	SLD 4	1473	-24	6825	23.84	73.53	-0.21
187	SLD 5	186	51	6180	-51.24	7.47	0.32
187	SLD 6	186	51	6180	-51.24	7.47	0.32
187	SLD 7	612	-56	8133	56.95	28.2	-0.39
187	SLD 8	612	-56	8133	56.95	28.2	-0.39
187	SLD 9	-680	55	6715	-55.32	-37.61	0.38
187	SLD 10	-680	55	6715	-55.32	-37.61	0.38
187	SLD 11	-254	-52	8668	52.87	-16.88	-0.33
187	SLD 12	-254	-52	8668	52.87	-16.88	-0.33
187	SLD 13	-1541	23	8022	-22.21	-82.94	0.2
187	SLD 14	-1541	23	8022	-22.21	-82.94	0.2
187	SLD 15	-1413	-9	8608	10.24	-76.72	-0.02
187	SLD 16	-1413	-9	8608	10.24	-76.72	-0.02
187	SLV 1	3096	22	4674	-23.4	158.72	0.02
187	SLV 2	3096	22	4674	-23.4	158.72	0.02
187	SLV 3	3396	-61	6053	59.83	173.37	-0.52
187	SLV 4	3396	-61	6053	59.83	173.37	-0.52
187	SLV 5	449	131	4507	-132.69	22.1	0.83
187	SLV 6	449	131	4507	-132.69	22.1	0.83
187	SLV 7	1452	-144	9104	144.75	70.94	-0.99
187	SLV 8	1452	-144	9104	144.75	70.94	-0.99
187	SLV 9	-1519	143	5743	-143.12	-80.35	0.97
187	SLV 10	-1519	143	5743	-143.12	-80.35	0.97
187	SLV 11	-516	-132	10340	134.31	-31.51	-0.85
187	SLV 12	-516	-132	10340	134.31	-31.51	-0.85
187	SLV 13	-3464	60	8794	-58.2	-182.78	0.51
187	SLV 14	-3464	60	8794	-58.2	-182.78	0.51
187	SLV 15	-3163	-23	10173	25.03	-168.13	-0.04
187	SLV 16	-3163	-23	10173	25.03	-168.13	-0.04
188	SLU 1	-266	-1	6905	0.88	-18.9	-0.01
188	SLU 2	-224	0	6718	0.66	-16.96	-0.01
188	SLU 3	-271	-1	7162	0.91	-19.42	-0.01
188	SLU 4	-246	-1	7050	0.78	-18.25	-0.01
188	SLU 5	-232	0	6898	0.69	-17.56	-0.01
188	SLU 6	-279	-1	7342	0.93	-20.02	-0.01
188	SLU 7	-253	-1	7230	0.81	-18.85	-0.01
188	SLU 8	-281	-1	7265	0.92	-20.1	-0.01
188	SLU 9	-256	-1	7153	0.79	-18.94	-0.01
188	SLU 10	-274	-1	8057	0.88	-20.54	-0.02
188	SLU 11	-321	-1	8501	1.13	-22.99	-0.01
188	SLU 12	-295	-1	8389	1	-21.83	-0.01

Nodo	Cont.	Reazione a traslazione			Reazione a rotazione		
Ind.	N.br.	x	y	z	x	y	z
188	SLU 13	-281	-1	8237	0.91	-21.13	-0.02
188	SLU 14	-328	-1	8681	1.15	-23.59	-0.01
188	SLU 15	-303	-1	8569	1.02	-22.42	-0.02
188	SLU 16	-331	-1	8604	1.14	-23.67	-0.01
188	SLU 17	-306	-1	8492	1.01	-22.51	-0.02
188	SLU 18	-337	-1	8818	1.19	-24.01	-0.01
188	SLU 19	-312	-1	8706	1.06	-22.84	-0.02
188	SLU 20	-345	-1	8998	1.21	-24.6	-0.01
188	SLU 21	-320	-1	8886	1.08	-23.44	-0.02
188	SLU 22	-315	-1	8113	1.04	-22.33	-0.01
188	SLU 23	-273	-1	7927	0.83	-20.39	-0.01
188	SLU 24	-319	-1	8370	1.08	-22.85	-0.01
188	SLU 25	-294	-1	8258	0.95	-21.69	-0.01
188	SLU 26	-280	-1	8107	0.85	-20.99	-0.02
188	SLU 27	-327	-1	8551	1.1	-23.45	-0.01
188	SLU 28	-302	-1	8439	0.97	-22.28	-0.01
188	SLU 29	-330	-1	8474	1.09	-23.53	-0.01
188	SLU 30	-305	-1	8362	0.96	-22.37	-0.01
188	SLU 31	-322	-1	9266	1.05	-23.97	-0.02
188	SLU 32	-369	-1	9709	1.29	-26.42	-0.02
188	SLU 33	-344	-1	9597	1.17	-25.26	-0.02
188	SLU 34	-330	-1	9446	1.07	-24.56	-0.02
188	SLU 35	-377	-1	9890	1.32	-27.02	-0.02
188	SLU 36	-351	-1	9778	1.19	-25.85	-0.02
188	SLU 37	-380	-1	9813	1.3	-27.1	-0.02
188	SLU 38	-354	-1	9701	1.18	-25.94	-0.02
188	SLU 39	-386	-1	10026	1.35	-27.44	-0.02
188	SLU 40	-361	-1	9914	1.23	-26.27	-0.02
188	SLU 41	-393	-1	10207	1.38	-28.03	-0.02
188	SLU 42	-368	-1	10095	1.25	-26.87	-0.02
188	SLU 43	-330	-1	8562	1.08	-23.4	-0.01
188	SLU 44	-287	-1	8375	0.87	-21.46	-0.02
188	SLU 45	-334	-1	8819	1.12	-23.91	-0.01
188	SLU 46	-309	-1	8707	0.99	-22.75	-0.02
188	SLU 47	-295	-1	8555	0.89	-22.06	-0.02
188	SLU 48	-342	-1	8999	1.14	-24.51	-0.01
188	SLU 49	-316	-1	8887	1.01	-23.35	-0.02
188	SLU 50	-345	-1	8922	1.13	-24.59	-0.01
188	SLU 51	-319	-1	8810	1	-23.43	-0.02
188	SLU 52	-337	-1	9714	1.09	-25.03	-0.02
188	SLU 53	-384	-1	10158	1.34	-27.48	-0.02
188	SLU 54	-359	-1	10046	1.21	-26.32	-0.02
188	SLU 55	-345	-1	9894	1.11	-25.63	-0.02
188	SLU 56	-391	-1	10338	1.36	-28.08	-0.02
188	SLU 57	-366	-1	10226	1.23	-26.92	-0.02
188	SLU 58	-394	-1	10261	1.35	-28.16	-0.02
188	SLU 59	-369	-1	10149	1.22	-27	-0.02
188	SLU 60	-401	-1	10475	1.39	-28.5	-0.02
188	SLU 61	-375	-1	10363	1.27	-27.34	-0.02
188	SLU 62	-408	-1	10655	1.42	-29.1	-0.02
188	SLU 63	-383	-1	10543	1.29	-27.93	-0.02
188	SLU 64	-378	-1	9770	1.25	-26.83	-0.02
188	SLU 65	-336	-1	9584	1.04	-24.89	-0.02
188	SLU 66	-383	-1	10027	1.28	-27.34	-0.02
188	SLU 67	-357	-1	9915	1.16	-26.18	-0.02
188	SLU 68	-344	-1	9764	1.06	-25.49	-0.02
188	SLU 69	-390	-1	10208	1.3	-27.94	-0.02
188	SLU 70	-365	-1	10096	1.18	-26.78	-0.02
188	SLU 71	-393	-1	10131	1.29	-28.02	-0.02
188	SLU 72	-368	-1	10019	1.17	-26.86	-0.02
188	SLU 73	-386	-1	10923	1.26	-28.46	-0.02
188	SLU 74	-432	-1	11366	1.5	-30.92	-0.02
188	SLU 75	-407	-1	11254	1.37	-29.75	-0.02
188	SLU 76	-393	-1	11103	1.28	-29.06	-0.02
188	SLU 77	-440	-1	11547	1.52	-31.51	-0.02
188	SLU 78	-415	-1	11435	1.4	-30.35	-0.02
188	SLU 79	-443	-1	11470	1.51	-31.6	-0.02
188	SLU 80	-418	-1	11358	1.38	-30.43	-0.02
188	SLU 81	-449	-1	11683	1.56	-31.93	-0.02
188	SLU 82	-424	-1	11571	1.43	-30.77	-0.02
188	SLU 83	-457	-1	11864	1.58	-32.53	-0.02
188	SLU 84	-431	-1	11752	1.46	-31.36	-0.02
188	SLE RA 1	-280	-1	7250	0.92	-19.88	-0.01
188	SLE RA 2	-252	-1	7126	0.78	-18.59	-0.01
188	SLE RA 3	-283	-1	7421	0.95	-20.23	-0.01
188	SLE RA 4	-266	-1	7347	0.86	-19.45	-0.01
188	SLE RA 5	-257	-1	7246	0.8	-18.99	-0.01
188	SLE RA 6	-288	-1	7541	0.96	-20.63	-0.01
188	SLE RA 7	-271	-1	7467	0.88	-19.85	-0.01
188	SLE RA 8	-290	-1	7490	0.95	-20.68	-0.01
188	SLE RA 9	-273	-1	7416	0.87	-19.9	-0.01
188	SLE RA 10	-285	-1	8018	0.93	-20.97	-0.01
188	SLE RA 11	-316	-1	8314	1.09	-22.61	-0.01
188	SLE RA 12	-300	-1	8239	1.01	-21.83	-0.01
188	SLE RA 13	-290	-1	8138	0.94	-21.37	-0.01
188	SLE RA 14	-321	-1	8434	1.11	-23.01	-0.01
188	SLE RA 15	-305	-1	8360	1.02	-22.23	-0.01
188	SLE RA 16	-323	-1	8383	1.1	-23.06	-0.01
188	SLE RA 17	-307	-1	8308	1.01	-22.29	-0.01
188	SLE RA 18	-327	-1	8525	1.13	-23.28	-0.01
188	SLE RA 19	-311	-1	8451	1.05	-22.51	-0.01

Nodo	Cont.	Reazione a traslazione			Reazione a rotazione		
Ind.	N.br.	x	y	z	x	y	z
188	SLE RA 20	-333	-1	8645	1.15	-23.68	-0.01
188	SLE RA 21	-316	-1	8571	1.06	-22.91	-0.01
188	SLE FR 1	-280	-1	7250	0.92	-19.88	-0.01
188	SLE FR 2	-275	-1	7225	0.9	-19.63	-0.01
188	SLE FR 3	-282	-1	7298	0.93	-20.04	-0.01
188	SLE FR 4	-289	-1	7608	0.96	-20.65	-0.01
188	SLE FR 5	-296	-1	7681	0.99	-21.06	-0.01
188	SLE FR 6	-304	-1	7888	1.03	-21.58	-0.01
188	SLE QP 1	-280	-1	7250	0.92	-19.88	-0.01
188	SLE QP 2	-294	-1	7633	0.99	-20.9	-0.01
188	SLD 1	931	8	5825	-8.29	45.21	-0.09
188	SLD 2	931	8	5825	-8.29	45.21	-0.09
188	SLD 3	1028	-23	6386	22.73	49.84	-0.12
188	SLD 4	1028	-23	6386	22.73	49.84	-0.12
188	SLD 5	-75	49	6240	-48.84	-8.08	0.01
188	SLD 6	-75	49	6240	-48.84	-8.08	0.01
188	SLD 7	250	-54	8109	54.55	7.33	-0.09
188	SLD 8	250	-54	8109	54.55	7.33	-0.09
188	SLD 9	-839	53	7156	-52.58	-49.14	0.07
188	SLD 10	-839	53	7156	-52.58	-49.14	0.07
188	SLD 11	-514	-50	9025	50.81	-33.73	-0.04
188	SLD 12	-514	-50	9025	50.81	-33.73	-0.04
188	SLD 13	-1617	21	8879	-20.76	-91.65	0.1
188	SLD 14	-1617	21	8879	-20.76	-91.65	0.1
188	SLD 15	-1520	-10	9440	10.26	-87.02	0.06
188	SLD 16	-1520	-10	9440	10.26	-87.02	0.06
188	SLV 1	2486	23	3472	-22.8	129.18	-0.2
188	SLV 2	2486	23	3472	-22.8	129.18	-0.2
188	SLV 3	2716	-57	4792	56.74	140.1	-0.28
188	SLV 4	2716	-57	4792	56.74	140.1	-0.28
188	SLV 5	191	127	4382	-126.78	7.56	0.05
188	SLV 6	191	127	4382	-126.78	7.56	0.05
188	SLV 7	957	-138	8783	138.34	43.96	-0.21
188	SLV 8	957	-138	8783	138.34	43.96	-0.21
188	SLV 9	-1546	136	6482	-136.37	-85.76	0.18
188	SLV 10	-1546	136	6482	-136.37	-85.76	0.18
188	SLV 11	-780	-128	10883	128.75	-49.37	-0.07
188	SLV 12	-780	-128	10883	128.75	-49.37	-0.07
188	SLV 13	-3305	55	10473	-54.77	-181.9	0.25
188	SLV 14	-3305	55	10473	-54.77	-181.9	0.25
188	SLV 15	-3075	-24	11793	24.77	-170.99	0.18
188	SLV 16	-3075	-24	11793	24.77	-170.99	0.18
189	SLU 1	-326	-2	7009	1.14	-44.5	-0.05
189	SLU 2	-294	-2	6832	1.04	-42.06	-0.06
189	SLU 3	-334	-2	7273	1.18	-46.01	-0.06
189	SLU 4	-315	-2	7166	1.13	-44.54	-0.06
189	SLU 5	-302	-2	7020	1.07	-43.36	-0.06
189	SLU 6	-342	-2	7462	1.21	-47.31	-0.06
189	SLU 7	-323	-2	7355	1.16	-45.84	-0.06
189	SLU 8	-342	-2	7387	1.2	-47.11	-0.06
189	SLU 9	-323	-2	7280	1.14	-45.64	-0.06
189	SLU 10	-356	-2	8188	1.3	-50.68	-0.07
189	SLU 11	-397	-2	8630	1.44	-54.63	-0.07
189	SLU 12	-378	-2	8523	1.38	-53.16	-0.07
189	SLU 13	-364	-2	8377	1.33	-51.99	-0.07
189	SLU 14	-405	-2	8818	1.46	-55.93	-0.07
189	SLU 15	-385	-2	8712	1.41	-54.46	-0.07
189	SLU 16	-404	-2	8744	1.45	-55.73	-0.07
189	SLU 17	-385	-2	8637	1.39	-54.26	-0.07
189	SLU 18	-415	-2	8948	1.5	-56.82	-0.07
189	SLU 19	-396	-2	8841	1.44	-55.36	-0.07
189	SLU 20	-423	-2	9136	1.53	-58.12	-0.07
189	SLU 21	-404	-2	9030	1.47	-56.66	-0.08
189	SLU 22	-384	-2	8237	1.34	-52.5	-0.06
189	SLU 23	-352	-2	8060	1.24	-50.06	-0.07
189	SLU 24	-392	-2	8501	1.38	-54	-0.07
189	SLU 25	-373	-2	8394	1.33	-52.54	-0.07
189	SLU 26	-360	-2	8248	1.27	-51.36	-0.07
189	SLU 27	-400	-2	8690	1.41	-55.3	-0.07
189	SLU 28	-381	-2	8583	1.36	-53.84	-0.07
189	SLU 29	-400	-2	8615	1.4	-55.1	-0.07
189	SLU 30	-381	-2	8508	1.34	-53.64	-0.07
189	SLU 31	-414	-2	9417	1.49	-58.68	-0.08
189	SLU 32	-455	-2	9858	1.63	-62.62	-0.08
189	SLU 33	-436	-2	9751	1.58	-61.16	-0.08
189	SLU 34	-422	-2	9605	1.52	-59.98	-0.08
189	SLU 35	-463	-2	10047	1.66	-63.93	-0.08
189	SLU 36	-443	-2	9940	1.61	-62.46	-0.08
189	SLU 37	-462	-2	9972	1.65	-63.73	-0.08
189	SLU 38	-443	-2	9865	1.59	-62.26	-0.08
189	SLU 39	-473	-2	10176	1.7	-64.82	-0.08
189	SLU 40	-454	-2	10069	1.64	-63.35	-0.08
189	SLU 41	-481	-2	10365	1.73	-66.12	-0.08
189	SLU 42	-462	-2	10258	1.67	-64.66	-0.08
189	SLU 43	-404	-2	8691	1.41	-55.11	-0.07
189	SLU 44	-372	-2	8513	1.32	-52.67	-0.08
189	SLU 45	-412	-2	8954	1.46	-56.61	-0.07
189	SLU 46	-393	-2	8848	1.4	-55.15	-0.08
189	SLU 47	-380	-2	8702	1.35	-53.97	-0.08
189	SLU 48	-420	-2	9143	1.49	-57.92	-0.07
189	SLU 49	-401	-2	9037	1.43	-56.45	-0.08

Nodo	Cont.	Reazione a traslazione			Reazione a rotazione		
Ind.	N.br.	x	y	z	x	y	z
189	SLU 50	-420	-2	9068	1.47	-57.72	-0.07
189	SLU 51	-401	-2	8962	1.42	-56.25	-0.08
189	SLU 52	-434	-2	9870	1.57	-61.29	-0.09
189	SLU 53	-475	-2	10311	1.71	-65.24	-0.08
189	SLU 54	-456	-2	10205	1.65	-63.77	-0.09
189	SLU 55	-442	-2	10059	1.6	-62.6	-0.09
189	SLU 56	-483	-2	10500	1.74	-66.54	-0.08
189	SLU 57	-463	-2	10393	1.68	-65.07	-0.09
189	SLU 58	-482	-2	10425	1.72	-66.34	-0.08
189	SLU 59	-463	-2	10319	1.67	-64.87	-0.09
189	SLU 60	-493	-2	10629	1.77	-67.43	-0.08
189	SLU 61	-474	-2	10523	1.71	-65.97	-0.09
189	SLU 62	-501	-2	10818	1.8	-68.73	-0.08
189	SLU 63	-482	-2	10711	1.74	-67.27	-0.09
189	SLU 64	-462	-2	9919	1.61	-63.11	-0.08
189	SLU 65	-430	-2	9741	1.52	-60.67	-0.08
189	SLU 66	-470	-2	10183	1.66	-64.61	-0.08
189	SLU 67	-451	-2	10076	1.6	-63.15	-0.08
189	SLU 68	-438	-2	9930	1.55	-61.97	-0.09
189	SLU 69	-478	-2	10371	1.69	-65.91	-0.08
189	SLU 70	-459	-2	10265	1.63	-64.45	-0.09
189	SLU 71	-478	-2	10297	1.67	-65.71	-0.08
189	SLU 72	-459	-2	10190	1.61	-64.25	-0.08
189	SLU 73	-492	-3	11098	1.77	-69.29	-0.09
189	SLU 74	-533	-3	11540	1.91	-73.23	-0.09
189	SLU 75	-514	-3	11433	1.85	-71.77	-0.09
189	SLU 76	-500	-3	11287	1.8	-70.59	-0.1
189	SLU 77	-541	-3	11728	1.94	-74.54	-0.09
189	SLU 78	-521	-3	11622	1.88	-73.07	-0.1
189	SLU 79	-540	-3	11653	1.92	-74.34	-0.09
189	SLU 80	-521	-3	11547	1.87	-72.87	-0.09
189	SLU 81	-551	-3	11857	1.97	-75.43	-0.09
189	SLU 82	-532	-3	11751	1.91	-73.96	-0.1
189	SLU 83	-559	-3	12046	2	-76.73	-0.09
189	SLU 84	-540	-3	11940	1.94	-75.26	-0.1
189	SLE RA 1	-343	-2	7360	1.2	-46.79	-0.06
189	SLE RA 2	-321	-2	7242	1.13	-45.16	-0.06
189	SLE RA 3	-348	-2	7536	1.23	-47.79	-0.06
189	SLE RA 4	-335	-2	7465	1.19	-46.81	-0.06
189	SLE RA 5	-327	-2	7368	1.15	-46.03	-0.06
189	SLE RA 6	-353	-2	7662	1.25	-48.66	-0.06
189	SLE RA 7	-341	-2	7591	1.21	-47.68	-0.06
189	SLE RA 8	-353	-2	7612	1.24	-48.52	-0.06
189	SLE RA 9	-340	-2	7541	1.2	-47.55	-0.06
189	SLE RA 10	-363	-2	8146	1.3	-50.91	-0.07
189	SLE RA 11	-390	-2	8440	1.39	-53.54	-0.07
189	SLE RA 12	-377	-2	8369	1.36	-52.56	-0.07
189	SLE RA 13	-368	-2	8272	1.32	-51.78	-0.07
189	SLE RA 14	-395	-2	8566	1.41	-54.41	-0.07
189	SLE RA 15	-382	-2	8495	1.38	-53.43	-0.07
189	SLE RA 16	-395	-2	8516	1.4	-54.27	-0.07
189	SLE RA 17	-382	-2	8445	1.37	-53.3	-0.07
189	SLE RA 18	-402	-2	8652	1.44	-55	-0.07
189	SLE RA 19	-389	-2	8581	1.4	-54.02	-0.07
189	SLE RA 20	-407	-2	8778	1.46	-55.87	-0.07
189	SLE RA 21	-395	-2	8707	1.42	-54.89	-0.07
189	SLE FR 1	-343	-2	7360	1.2	-46.79	-0.06
189	SLE FR 2	-338	-2	7336	1.18	-46.46	-0.06
189	SLE FR 3	-345	-2	7410	1.2	-47.14	-0.06
189	SLE FR 4	-356	-2	7724	1.26	-48.93	-0.06
189	SLE FR 5	-363	-2	7798	1.28	-49.6	-0.06
189	SLE FR 6	-372	-2	8006	1.32	-50.89	-0.06
189	SLE QP 1	-343	-2	7360	1.2	-46.79	-0.06
189	SLE QP 2	-361	-2	7748	1.27	-49.25	-0.06
189	SLD 1	303	5	5072	-5.6	25.01	-0.51
189	SLD 2	303	5	5072	-5.6	25.01	-0.51
189	SLD 3	343	-22	5580	19.48	28.49	-0.33
189	SLD 4	343	-22	5580	19.48	28.49	-0.33
189	SLD 5	-222	40	6176	-38.83	-32.25	-0.48
189	SLD 6	-222	40	6176	-38.83	-32.25	-0.48
189	SLD 7	-89	-47	7867	44.77	-20.65	0.14
189	SLD 8	-89	-47	7867	44.77	-20.65	0.14
189	SLD 9	-632	44	7629	-42.24	-77.85	-0.26
189	SLD 10	-632	44	7629	-42.24	-77.85	-0.26
189	SLD 11	-499	-43	9320	41.37	-66.26	0.36
189	SLD 12	-499	-43	9320	41.37	-66.26	0.36
189	SLD 13	-1064	18	9916	-16.94	-127	0.21
189	SLD 14	-1064	18	9916	-16.94	-127	0.21
189	SLD 15	-1024	-8	10423	8.14	-123.52	0.39
189	SLD 16	-1024	-8	10423	8.14	-123.52	0.39
189	SLV 1	1147	15	1618	-16.53	119.39	-1.17
189	SLV 2	1147	15	1618	-16.53	119.39	-1.17
189	SLV 3	1242	-52	2814	47.78	127.7	-0.72
189	SLV 4	1242	-52	2814	47.78	127.7	-0.72
189	SLV 5	-52	105	4096	-101.6	-11.26	-1.07
189	SLV 6	-52	105	4096	-101.6	-11.26	-1.07
189	SLV 7	264	-118	8081	112.75	16.44	0.42
189	SLV 8	264	-118	8081	112.75	16.44	0.42
189	SLV 9	-985	115	7415	-110.21	-114.94	-0.54
189	SLV 10	-985	115	7415	-110.21	-114.94	-0.54
189	SLV 11	-669	-108	11400	104.13	-87.24	0.95

Nodo	Cont.	Reazione a traslazione			Reazione a rotazione		
Ind.	N.br.	x	y	z	x	y	z
189	SLV 12	-669	-108	11400	104.13	-87.24	0.95
189	SLV 13	-1963	49	12682	-45.24	-226.21	0.6
189	SLV 14	-1963	49	12682	-45.24	-226.21	0.6
189	SLV 15	-1868	-18	13877	19.06	-217.9	1.05
189	SLV 16	-1868	-18	13877	19.06	-217.9	1.05
190	SLU 1	-1735	-1	4612	0.66	-30.12	0.13
190	SLU 2	-1679	-1	4482	0.68	-28.82	0.14
190	SLU 3	-1800	-1	4786	0.69	-31.19	0.14
190	SLU 4	-1766	-1	4708	0.7	-30.41	0.14
190	SLU 5	-1728	-2	4613	0.7	-29.68	0.14
190	SLU 6	-1849	-1	4916	0.71	-32.05	0.14
190	SLU 7	-1815	-1	4838	0.72	-31.27	0.14
190	SLU 8	-1834	-1	4873	0.7	-31.84	0.14
190	SLU 9	-1801	-1	4796	0.71	-31.06	0.14
190	SLU 10	-2018	-2	5379	0.81	-34.7	0.16
190	SLU 11	-2139	-1	5683	0.82	-37.07	0.17
190	SLU 12	-2105	-1	5605	0.83	-36.29	0.17
190	SLU 13	-2067	-2	5510	0.83	-35.56	0.17
190	SLU 14	-2188	-1	5814	0.84	-37.93	0.17
190	SLU 15	-2154	-1	5736	0.85	-37.15	0.17
190	SLU 16	-2174	-1	5771	0.83	-37.72	0.17
190	SLU 17	-2140	-1	5693	0.84	-36.95	0.17
190	SLU 18	-2220	-1	5894	0.85	-38.52	0.17
190	SLU 19	-2186	-1	5816	0.86	-37.74	0.17
190	SLU 20	-2269	-1	6024	0.87	-39.38	0.18
190	SLU 21	-2235	-1	5946	0.88	-38.6	0.18
190	SLU 22	-2045	-1	5430	0.77	-35.52	0.16
190	SLU 23	-1988	-2	5300	0.79	-34.23	0.16
190	SLU 24	-2110	-1	5604	0.8	-36.59	0.16
190	SLU 25	-2076	-1	5526	0.81	-35.81	0.16
190	SLU 26	-2038	-2	5431	0.81	-35.09	0.16
190	SLU 27	-2159	-1	5734	0.81	-37.45	0.16
190	SLU 28	-2125	-1	5656	0.82	-36.68	0.17
190	SLU 29	-2144	-1	5691	0.81	-37.25	0.16
190	SLU 30	-2110	-1	5613	0.82	-36.47	0.16
190	SLU 31	-2328	-2	6197	0.92	-40.11	0.19
190	SLU 32	-2449	-1	6501	0.93	-42.47	0.19
190	SLU 33	-2415	-2	6423	0.94	-41.69	0.19
190	SLU 34	-2377	-2	6328	0.94	-40.97	0.19
190	SLU 35	-2498	-1	6631	0.94	-43.34	0.19
190	SLU 36	-2464	-2	6554	0.95	-42.56	0.19
190	SLU 37	-2484	-1	6589	0.94	-43.13	0.19
190	SLU 38	-2450	-2	6511	0.95	-42.35	0.19
190	SLU 39	-2529	-1	6712	0.96	-43.92	0.19
190	SLU 40	-2496	-2	6634	0.97	-43.15	0.2
190	SLU 41	-2579	-1	6842	0.97	-44.79	0.2
190	SLU 42	-2545	-2	6764	0.98	-44.01	0.2
190	SLU 43	-2149	-1	5715	0.82	-37.3	0.17
190	SLU 44	-2093	-2	5585	0.84	-36	0.17
190	SLU 45	-2214	-1	5889	0.85	-38.37	0.17
190	SLU 46	-2180	-2	5811	0.86	-37.59	0.17
190	SLU 47	-2142	-2	5716	0.86	-36.87	0.17
190	SLU 48	-2264	-1	6020	0.87	-39.23	0.17
190	SLU 49	-2230	-2	5942	0.88	-38.45	0.18
190	SLU 50	-2249	-1	5977	0.86	-39.03	0.17
190	SLU 51	-2215	-2	5899	0.87	-38.25	0.17
190	SLU 52	-2432	-2	6482	0.97	-41.88	0.2
190	SLU 53	-2553	-1	6786	0.98	-44.25	0.2
190	SLU 54	-2519	-2	6708	0.99	-43.47	0.2
190	SLU 55	-2482	-2	6613	0.99	-42.75	0.2
190	SLU 56	-2603	-1	6917	1	-45.11	0.2
190	SLU 57	-2569	-2	6839	1.01	-44.33	0.2
190	SLU 58	-2588	-1	6874	0.99	-44.91	0.2
190	SLU 59	-2554	-2	6796	1	-44.13	0.2
190	SLU 60	-2634	-1	6997	1.01	-45.7	0.2
190	SLU 61	-2600	-2	6919	1.02	-44.92	0.21
190	SLU 62	-2683	-1	7128	1.03	-46.56	0.21
190	SLU 63	-2650	-2	7050	1.04	-45.79	0.21
190	SLU 64	-2459	-1	6533	0.93	-42.71	0.19
190	SLU 65	-2403	-2	6403	0.95	-41.41	0.19
190	SLU 66	-2524	-1	6707	0.96	-43.77	0.19
190	SLU 67	-2490	-2	6629	0.97	-43	0.19
190	SLU 68	-2452	-2	6534	0.97	-42.27	0.19
190	SLU 69	-2574	-1	6837	0.97	-44.64	0.2
190	SLU 70	-2540	-2	6760	0.99	-43.86	0.2
190	SLU 71	-2559	-1	6794	0.97	-44.43	0.19
190	SLU 72	-2525	-2	6717	0.98	-43.65	0.2
190	SLU 73	-2742	-2	7300	1.08	-47.29	0.22
190	SLU 74	-2863	-2	7604	1.09	-49.66	0.22
190	SLU 75	-2829	-2	7526	1.1	-48.88	0.22
190	SLU 76	-2792	-2	7431	1.1	-48.15	0.22
190	SLU 77	-2913	-2	7735	1.11	-50.52	0.22
190	SLU 78	-2879	-2	7657	1.12	-49.74	0.23
190	SLU 79	-2898	-2	7692	1.1	-50.31	0.22
190	SLU 80	-2864	-2	7614	1.11	-49.53	0.22
190	SLU 81	-2944	-2	7815	1.12	-51.11	0.23
190	SLU 82	-2910	-2	7737	1.13	-50.33	0.23
190	SLU 83	-2993	-2	7945	1.14	-51.97	0.23
190	SLU 84	-2959	-2	7868	1.15	-51.19	0.23
190	SLE RA 1	-1824	-1	4846	0.69	-31.66	0.14
190	SLE RA 2	-1786	-1	4759	0.7	-30.8	0.14

Nodo	Cont.	Reazione a traslazione			Reazione a rotazione		
Ind.	N.br.	x	y	z	x	y	z
190	SLE RA 3	-1867	-1	4961	0.71	-32.37	0.14
190	SLE RA 4	-1844	-1	4909	0.72	-31.86	0.14
190	SLE RA 5	-1819	-1	4846	0.72	-31.37	0.14
190	SLE RA 6	-1900	-1	5049	0.72	-32.95	0.15
190	SLE RA 7	-1877	-1	4997	0.73	-32.43	0.15
190	SLE RA 8	-1890	-1	5020	0.72	-32.81	0.14
190	SLE RA 9	-1867	-1	4968	0.72	-32.29	0.15
190	SLE RA 10	-2012	-1	5357	0.79	-34.72	0.16
190	SLE RA 11	-2093	-1	5560	0.8	-36.3	0.16
190	SLE RA 12	-2070	-1	5508	0.8	-35.78	0.16
190	SLE RA 13	-2045	-1	5444	0.8	-35.29	0.16
190	SLE RA 14	-2126	-1	5647	0.81	-36.87	0.16
190	SLE RA 15	-2103	-1	5595	0.82	-36.35	0.16
190	SLE RA 16	-2116	-1	5618	0.8	-36.73	0.16
190	SLE RA 17	-2093	-1	5566	0.81	-36.21	0.16
190	SLE RA 18	-2147	-1	5700	0.82	-37.26	0.17
190	SLE RA 19	-2124	-1	5648	0.82	-36.74	0.17
190	SLE RA 20	-2180	-1	5787	0.83	-37.84	0.17
190	SLE RA 21	-2157	-1	5735	0.84	-37.32	0.17
190	SLE FR 1	-1824	-1	4846	0.69	-31.66	0.14
190	SLE FR 2	-1816	-1	4828	0.69	-31.49	0.14
190	SLE FR 3	-1837	-1	4880	0.7	-31.89	0.14
190	SLE FR 4	-1913	-1	5085	0.73	-33.17	0.15
190	SLE FR 5	-1934	-1	5137	0.73	-33.57	0.15
190	SLE FR 6	-1985	-1	5273	0.75	-34.46	0.15
190	SLE QP 1	-1824	-1	4846	0.69	-31.66	0.14
190	SLE QP 2	-1921	-1	5102	0.73	-33.34	0.15
190	SLD 1	-379	-25	1779	-0.14	3.64	0.04
190	SLD 2	-379	-25	1779	-0.14	3.64	0.04
190	SLD 3	-452	3	2008	7.47	2.3	1.51
190	SLD 4	-452	3	2008	7.47	2.3	1.51
190	SLD 5	-1347	-50	3759	-11.08	-20.21	-2.1
190	SLD 6	-1347	-50	3759	-11.08	-20.21	-2.1
190	SLD 7	-1591	42	4520	14.3	-24.68	2.77
190	SLD 8	-1591	42	4520	14.3	-24.68	2.77
190	SLD 9	-2250	-44	5684	-12.84	-42	-2.48
190	SLD 10	-2250	-44	5684	-12.84	-42	-2.48
190	SLD 11	-2494	48	6445	12.53	-46.47	2.4
190	SLD 12	-2494	48	6445	12.53	-46.47	2.4
190	SLD 13	-3389	-5	8196	-6.01	-68.98	-1.21
190	SLD 14	-3389	-5	8196	-6.01	-68.98	-1.21
190	SLD 15	-3462	23	8424	1.6	-70.33	0.25
190	SLD 16	-3462	23	8424	1.6	-70.33	0.25
190	SLV 1	1592	-61	-2474	-1.76	50.86	-0.18
190	SLV 2	1592	-61	-2474	-1.76	50.86	-0.18
190	SLV 3	1416	9	-1931	17.73	47.61	3.57
190	SLV 4	1416	9	-1931	17.73	47.61	3.57
190	SLV 5	-601	-126	2006	-29.57	-3.15	-5.63
190	SLV 6	-601	-126	2006	-29.57	-3.15	-5.63
190	SLV 7	-1185	109	3815	35.38	-13.99	6.85
190	SLV 8	-1185	109	3815	35.38	-13.99	6.85
190	SLV 9	-2656	-111	6389	-33.92	-52.7	-6.56
190	SLV 10	-2656	-111	6389	-33.92	-52.7	-6.56
190	SLV 11	-3240	124	8198	31.03	-63.54	5.93
190	SLV 12	-3240	124	8198	31.03	-63.54	5.93
190	SLV 13	-5257	-11	12135	-16.27	-114.3	-3.27
190	SLV 14	-5257	-11	12135	-16.27	-114.3	-3.27
190	SLV 15	-5433	59	12678	3.22	-117.55	0.47
190	SLV 16	-5433	59	12678	3.22	-117.55	0.47
191	SLU 1	1058	-11	3861	3.25	6.14	-0.42
191	SLU 2	1046	-11	3810	3.23	6.18	-0.42
191	SLU 3	1096	-12	4007	3.38	6.27	-0.44
191	SLU 4	1089	-12	3976	3.36	6.3	-0.44
191	SLU 5	1068	-11	3903	3.32	6.18	-0.43
191	SLU 6	1118	-12	4101	3.46	6.28	-0.45
191	SLU 7	1111	-12	4070	3.45	6.3	-0.45
191	SLU 8	1103	-12	4049	3.42	6.14	-0.44
191	SLU 9	1096	-12	4017	3.41	6.17	-0.44
191	SLU 10	1228	-13	4496	3.82	6.92	-0.5
191	SLU 11	1278	-14	4694	3.96	7.01	-0.52
191	SLU 12	1271	-14	4663	3.95	7.04	-0.52
191	SLU 13	1251	-13	4589	3.91	6.92	-0.51
191	SLU 14	1301	-14	4787	4.05	7.01	-0.53
191	SLU 15	1294	-14	4756	4.04	7.04	-0.53
191	SLU 16	1285	-14	4735	4.01	6.88	-0.52
191	SLU 17	1278	-14	4704	4	6.9	-0.52
191	SLU 18	1319	-14	4842	4.09	7.19	-0.54
191	SLU 19	1311	-14	4811	4.08	7.22	-0.53
191	SLU 20	1341	-14	4935	4.18	7.19	-0.55
191	SLU 21	1334	-14	4904	4.17	7.22	-0.55
191	SLU 22	1213	-13	4461	3.75	6.57	-0.49
191	SLU 23	1201	-13	4409	3.73	6.62	-0.49
191	SLU 24	1251	-13	4607	3.87	6.71	-0.5
191	SLU 25	1244	-13	4576	3.86	6.73	-0.5
191	SLU 26	1224	-13	4503	3.81	6.62	-0.5
191	SLU 27	1274	-14	4701	3.96	6.71	-0.52
191	SLU 28	1267	-14	4670	3.95	6.74	-0.51
191	SLU 29	1258	-13	4648	3.92	6.58	-0.51
191	SLU 30	1251	-13	4617	3.91	6.6	-0.51
191	SLU 31	1384	-15	5096	4.32	7.35	-0.57
191	SLU 32	1434	-15	5293	4.46	7.45	-0.58

Nodo	Cont.	Reazione a traslazione			Reazione a rotazione		
Ind.	N.br.	x	y	z	x	y	z
191	SLU 33	1427	-15	5262	4.45	7.47	-0.58
191	SLU 34	1406	-15	5189	4.4	7.35	-0.58
191	SLU 35	1456	-16	5387	4.55	7.45	-0.59
191	SLU 36	1449	-16	5356	4.54	7.47	-0.59
191	SLU 37	1441	-16	5335	4.51	7.31	-0.59
191	SLU 38	1434	-16	5304	4.5	7.34	-0.59
191	SLU 39	1474	-16	5442	4.59	7.63	-0.6
191	SLU 40	1467	-16	5410	4.58	7.65	-0.6
191	SLU 41	1497	-16	5535	4.68	7.63	-0.61
191	SLU 42	1489	-16	5504	4.66	7.65	-0.61
191	SLU 43	1322	-14	4814	4.06	7.83	-0.53
191	SLU 44	1310	-14	4762	4.04	7.87	-0.52
191	SLU 45	1360	-14	4960	4.18	7.97	-0.54
191	SLU 46	1353	-14	4929	4.17	7.99	-0.54
191	SLU 47	1332	-14	4856	4.12	7.87	-0.54
191	SLU 48	1382	-15	5054	4.27	7.97	-0.55
191	SLU 49	1375	-15	5023	4.25	7.99	-0.55
191	SLU 50	1367	-15	5001	4.23	7.83	-0.55
191	SLU 51	1360	-14	4970	4.22	7.86	-0.55
191	SLU 52	1492	-16	5449	4.63	8.61	-0.6
191	SLU 53	1542	-16	5646	4.77	8.7	-0.62
191	SLU 54	1535	-16	5615	4.76	8.73	-0.62
191	SLU 55	1515	-16	5542	4.71	8.61	-0.61
191	SLU 56	1565	-17	5740	4.86	8.71	-0.63
191	SLU 57	1558	-17	5709	4.84	8.73	-0.63
191	SLU 58	1549	-17	5688	4.82	8.57	-0.63
191	SLU 59	1542	-17	5656	4.8	8.6	-0.63
191	SLU 60	1583	-17	5794	4.9	8.88	-0.64
191	SLU 61	1575	-17	5763	4.89	8.91	-0.64
191	SLU 62	1605	-17	5888	4.98	8.89	-0.65
191	SLU 63	1598	-17	5857	4.97	8.91	-0.65
191	SLU 64	1477	-16	5414	4.56	8.26	-0.59
191	SLU 65	1465	-16	5362	4.53	8.31	-0.59
191	SLU 66	1515	-16	5560	4.68	8.4	-0.61
191	SLU 67	1508	-16	5529	4.67	8.43	-0.61
191	SLU 68	1488	-16	5456	4.62	8.31	-0.6
191	SLU 69	1538	-16	5654	4.76	8.4	-0.62
191	SLU 70	1531	-16	5623	4.75	8.43	-0.62
191	SLU 71	1522	-16	5601	4.73	8.27	-0.61
191	SLU 72	1515	-16	5570	4.71	8.29	-0.61
191	SLU 73	1648	-18	6048	5.12	9.05	-0.67
191	SLU 74	1698	-18	6246	5.27	9.14	-0.69
191	SLU 75	1691	-18	6215	5.25	9.17	-0.69
191	SLU 76	1670	-18	6142	5.21	9.05	-0.68
191	SLU 77	1720	-18	6340	5.35	9.14	-0.7
191	SLU 78	1713	-18	6309	5.34	9.17	-0.7
191	SLU 79	1705	-18	6287	5.32	9.01	-0.69
191	SLU 80	1698	-18	6256	5.3	9.03	-0.69
191	SLU 81	1738	-19	6394	5.4	9.32	-0.71
191	SLU 82	1731	-19	6363	5.38	9.34	-0.7
191	SLU 83	1761	-19	6488	5.48	9.32	-0.72
191	SLU 84	1753	-19	6457	5.47	9.35	-0.72
191	SLE RA 1	1102	-12	4033	3.39	6.26	-0.44
191	SLE RA 2	1094	-12	3998	3.38	6.29	-0.44
191	SLE RA 3	1128	-12	4130	3.48	6.35	-0.45
191	SLE RA 4	1123	-12	4109	3.47	6.37	-0.45
191	SLE RA 5	1109	-12	4061	3.44	6.29	-0.45
191	SLE RA 6	1143	-12	4192	3.53	6.35	-0.46
191	SLE RA 7	1138	-12	4172	3.53	6.37	-0.46
191	SLE RA 8	1132	-12	4158	3.51	6.26	-0.46
191	SLE RA 9	1127	-12	4137	3.5	6.28	-0.45
191	SLE RA 10	1216	-13	4456	3.77	6.78	-0.49
191	SLE RA 11	1249	-13	4588	3.87	6.84	-0.5
191	SLE RA 12	1244	-13	4567	3.86	6.86	-0.5
191	SLE RA 13	1231	-13	4518	3.83	6.78	-0.5
191	SLE RA 14	1264	-14	4650	3.93	6.85	-0.51
191	SLE RA 15	1259	-14	4629	3.92	6.86	-0.51
191	SLE RA 16	1254	-13	4615	3.9	6.76	-0.51
191	SLE RA 17	1249	-13	4594	3.89	6.77	-0.51
191	SLE RA 18	1276	-14	4686	3.96	6.96	-0.52
191	SLE RA 19	1271	-14	4666	3.95	6.98	-0.52
191	SLE RA 20	1291	-14	4749	4.01	6.97	-0.52
191	SLE RA 21	1286	-14	4728	4	6.98	-0.52
191	SLE FR 1	1102	-12	4033	3.39	6.26	-0.44
191	SLE FR 2	1100	-12	4026	3.39	6.27	-0.44
191	SLE FR 3	1108	-12	4058	3.42	6.26	-0.44
191	SLE FR 4	1153	-12	4222	3.56	6.48	-0.46
191	SLE FR 5	1160	-12	4254	3.59	6.47	-0.47
191	SLE FR 6	1189	-13	4360	3.68	6.61	-0.48
191	SLE QP 1	1102	-12	4033	3.39	6.26	-0.44
191	SLE QP 2	1154	-12	4229	3.56	6.47	-0.46
191	SLD 1	1972	-23	5738	5.61	28.12	-0.9
191	SLD 2	1972	-23	5738	5.61	28.12	-0.9
191	SLD 3	2331	-46	6745	10.1	34.24	-1.99
191	SLD 4	2331	-46	6745	10.1	34.24	-1.99
191	SLD 5	855	19	3155	-2.64	3.69	1.05
191	SLD 6	855	19	3155	-2.64	3.69	1.05
191	SLD 7	2052	-57	6510	12.34	24.08	-2.57
191	SLD 8	2052	-57	6510	12.34	24.08	-2.57
191	SLD 9	256	33	1947	-5.22	-11.14	1.64
191	SLD 10	256	33	1947	-5.22	-11.14	1.64

Nodo	Cont.	Reazione a traslazione			Reazione a rotazione		
Ind.	N.br.	x	y	z	x	y	z
191	SLD 11	1454	-44	5303	9.77	9.26	-1.98
191	SLD 12	1454	-44	5303	9.77	9.26	-1.98
191	SLD 13	-23	22	1713	-2.98	-21.3	1.06
191	SLD 14	-23	22	1713	-2.98	-21.3	1.06
191	SLD 15	336	-1	2719	1.52	-15.18	-0.02
191	SLD 16	336	-1	2719	1.52	-15.18	-0.02
191	SLV 1	3003	-38	7641	8.23	55.49	-1.46
191	SLV 2	3003	-38	7641	8.23	55.49	-1.46
191	SLV 3	3843	-96	9994	19.68	69.77	-4.23
191	SLV 4	3843	-96	9994	19.68	69.77	-4.23
191	SLV 5	436	69	1683	-12.41	-0.48	3.44
191	SLV 6	436	69	1683	-12.41	-0.48	3.44
191	SLV 7	3234	-126	9528	25.77	47.12	-5.8
191	SLV 8	3234	-126	9528	25.77	47.12	-5.8
191	SLV 9	-926	101	-1070	-18.64	-34.17	4.87
191	SLV 10	-926	101	-1070	-18.64	-34.17	4.87
191	SLV 11	1873	-93	6774	19.53	13.43	-4.36
191	SLV 12	1873	-93	6774	19.53	13.43	-4.36
191	SLV 13	-1534	72	-1537	-12.56	-56.82	3.31
191	SLV 14	-1534	72	-1537	-12.56	-56.82	3.31
191	SLV 15	-695	13	817	-1.11	-42.54	0.54
191	SLV 16	-695	13	817	-1.11	-42.54	0.54
192	SLU 1	111	-1005	9176	32.35	-16.75	0.81
192	SLU 2	110	-996	9050	32.13	-16.31	0.8
192	SLU 3	118	-1043	9545	33.54	-17.63	0.84
192	SLU 4	118	-1037	9470	33.41	-17.36	0.83
192	SLU 5	119	-1022	9310	32.95	-17.08	0.82
192	SLU 6	127	-1070	9804	34.36	-18.4	0.86
192	SLU 7	127	-1064	9729	34.23	-18.13	0.86
192	SLU 8	127	-1058	9695	33.99	-18.28	0.85
192	SLU 9	127	-1052	9620	33.86	-18.02	0.85
192	SLU 10	130	-1166	10702	37.45	-20.01	0.95
192	SLU 11	139	-1214	11197	38.86	-21.33	0.98
192	SLU 12	138	-1208	11121	38.73	-21.06	0.98
192	SLU 13	139	-1193	10961	38.27	-20.77	0.97
192	SLU 14	147	-1240	11456	39.68	-22.09	1
192	SLU 15	147	-1234	11381	39.55	-21.83	1
192	SLU 16	147	-1229	11347	39.31	-21.98	0.99
192	SLU 17	147	-1223	11271	39.18	-21.71	0.99
192	SLU 18	139	-1249	11536	39.95	-22.03	1.01
192	SLU 19	139	-1243	11460	39.82	-21.77	1.01
192	SLU 20	148	-1275	11795	40.77	-22.8	1.03
192	SLU 21	148	-1270	11719	40.64	-22.53	1.03
192	SLU 22	133	-1155	10658	36.96	-20.43	0.93
192	SLU 23	132	-1145	10532	36.73	-19.99	0.92
192	SLU 24	141	-1193	11026	38.14	-21.31	0.96
192	SLU 25	140	-1187	10951	38.01	-21.04	0.96
192	SLU 26	141	-1172	10791	37.55	-20.75	0.94
192	SLU 27	149	-1219	11286	38.96	-22.07	0.98
192	SLU 28	149	-1213	11210	38.83	-21.81	0.98
192	SLU 29	149	-1208	11176	38.59	-21.96	0.97
192	SLU 30	149	-1202	11101	38.46	-21.7	0.97
192	SLU 31	153	-1316	12183	42.06	-23.68	1.07
192	SLU 32	161	-1363	12678	43.47	-25	1.1
192	SLU 33	161	-1358	12603	43.33	-24.74	1.1
192	SLU 34	161	-1342	12443	42.87	-24.45	1.09
192	SLU 35	169	-1390	12937	44.28	-25.77	1.12
192	SLU 36	169	-1384	12862	44.15	-25.51	1.12
192	SLU 37	169	-1378	12828	43.91	-25.66	1.11
192	SLU 38	169	-1372	12753	43.78	-25.39	1.11
192	SLU 39	162	-1398	13017	44.56	-25.71	1.13
192	SLU 40	161	-1393	12942	44.42	-25.44	1.13
192	SLU 41	170	-1425	13276	45.38	-26.47	1.15
192	SLU 42	170	-1419	13201	45.24	-26.21	1.15
192	SLU 43	136	-1255	11421	40.48	-20.51	1.01
192	SLU 44	136	-1246	11295	40.26	-20.07	1
192	SLU 45	144	-1293	11790	41.67	-21.39	1.04
192	SLU 46	144	-1288	11714	41.53	-21.13	1.04
192	SLU 47	144	-1272	11555	41.07	-20.84	1.02
192	SLU 48	152	-1320	12049	42.48	-22.16	1.06
192	SLU 49	152	-1314	11974	42.35	-21.9	1.06
192	SLU 50	153	-1308	11940	42.11	-22.05	1.05
192	SLU 51	153	-1303	11864	41.98	-21.78	1.05
192	SLU 52	156	-1416	12947	45.58	-23.77	1.15
192	SLU 53	164	-1464	13441	46.99	-25.09	1.18
192	SLU 54	164	-1458	13366	46.85	-24.82	1.18
192	SLU 55	164	-1443	13206	46.4	-24.54	1.17
192	SLU 56	173	-1490	13701	47.81	-25.86	1.2
192	SLU 57	172	-1485	13625	47.67	-25.59	1.2
192	SLU 58	173	-1479	13591	47.44	-25.74	1.19
192	SLU 59	173	-1473	13516	47.3	-25.48	1.19
192	SLU 60	165	-1499	13780	48.08	-25.79	1.21
192	SLU 61	165	-1493	13705	47.95	-25.53	1.21
192	SLU 62	173	-1525	14040	48.9	-26.56	1.24
192	SLU 63	173	-1520	13964	48.76	-26.3	1.23
192	SLU 64	158	-1405	12903	45.08	-24.19	1.13
192	SLU 65	158	-1396	12777	44.86	-23.75	1.12
192	SLU 66	166	-1443	13271	46.27	-25.07	1.16
192	SLU 67	166	-1437	13196	46.14	-24.81	1.16
192	SLU 68	166	-1422	13036	45.68	-24.52	1.15
192	SLU 69	174	-1469	13531	47.09	-25.84	1.18

Nodo	Cont.	Reazione a traslazione			Reazione a rotazione		
Ind.	N.br.	x	y	z	x	y	z
192	SLU 70	174	-1464	13455	46.96	-25.57	1.18
192	SLU 71	175	-1458	13421	46.72	-25.72	1.17
192	SLU 72	175	-1452	13346	46.59	-25.46	1.17
192	SLU 73	178	-1566	14428	50.18	-27.45	1.27
192	SLU 74	186	-1613	14923	51.59	-28.77	1.3
192	SLU 75	186	-1608	14847	51.46	-28.5	1.3
192	SLU 76	186	-1592	14688	51	-28.21	1.29
192	SLU 77	195	-1640	15182	52.41	-29.53	1.32
192	SLU 78	194	-1634	15107	52.28	-29.27	1.32
192	SLU 79	195	-1628	15073	52.04	-29.42	1.31
192	SLU 80	195	-1623	14997	51.91	-29.16	1.31
192	SLU 81	187	-1649	15262	52.68	-29.47	1.34
192	SLU 82	187	-1643	15186	52.55	-29.21	1.33
192	SLU 83	195	-1675	15521	53.5	-30.24	1.36
192	SLU 84	195	-1669	15446	53.37	-29.97	1.35
192	SLE RA 1	117	-1048	9599	33.67	-17.8	0.84
192	SLE RA 2	117	-1042	9516	33.52	-17.51	0.84
192	SLE RA 3	122	-1073	9845	34.46	-18.39	0.86
192	SLE RA 4	122	-1069	9795	34.37	-18.21	0.86
192	SLE RA 5	122	-1059	9689	34.06	-18.02	0.85
192	SLE RA 6	128	-1091	10018	35	-18.9	0.88
192	SLE RA 7	128	-1087	9968	34.92	-18.72	0.87
192	SLE RA 8	128	-1083	9945	34.76	-18.82	0.87
192	SLE RA 9	128	-1079	9895	34.67	-18.65	0.87
192	SLE RA 10	130	-1155	10617	37.07	-19.97	0.94
192	SLE RA 11	136	-1187	10946	38.01	-20.85	0.96
192	SLE RA 12	135	-1183	10896	37.92	-20.67	0.96
192	SLE RA 13	136	-1173	10790	37.61	-20.48	0.95
192	SLE RA 14	141	-1205	11119	38.55	-21.36	0.97
192	SLE RA 15	141	-1201	11069	38.46	-21.19	0.97
192	SLE RA 16	141	-1197	11046	38.31	-21.29	0.97
192	SLE RA 17	141	-1193	10996	38.22	-21.11	0.96
192	SLE RA 18	136	-1210	11172	38.73	-21.32	0.98
192	SLE RA 19	136	-1206	11122	38.65	-21.14	0.98
192	SLE RA 20	142	-1228	11345	39.28	-21.83	0.99
192	SLE RA 21	142	-1224	11295	39.19	-21.66	0.99
192	SLE FR 1	117	-1048	9599	33.67	-17.8	0.84
192	SLE FR 2	117	-1047	9583	33.64	-17.74	0.84
192	SLE FR 3	119	-1055	9669	33.88	-18	0.85
192	SLE FR 4	123	-1095	10055	35.16	-18.8	0.88
192	SLE FR 5	125	-1104	10140	35.4	-19.06	0.89
192	SLE FR 6	127	-1129	10386	36.2	-19.56	0.91
192	SLE QP 1	117	-1048	9599	33.67	-17.8	0.84
192	SLE QP 2	123	-1097	10071	35.19	-18.86	0.88
192	SLD 1	-568	-702	6887	19.35	21.03	1.46
192	SLD 2	-568	-702	6887	19.35	21.03	1.46
192	SLD 3	-613	-1042	8818	34.04	25.18	2.62
192	SLD 4	-613	-1042	8818	34.04	25.18	2.62
192	SLD 5	-15	-463	6187	8.17	-13.19	-0.7
192	SLD 6	-15	-463	6187	8.17	-13.19	-0.7
192	SLD 7	-167	-1595	12624	57.11	0.65	3.16
192	SLD 8	-167	-1595	12624	57.11	0.65	3.16
192	SLD 9	413	-598	7519	13.26	-38.36	-1.39
192	SLD 10	413	-598	7519	13.26	-38.36	-1.39
192	SLD 11	261	-1730	13955	62.2	-24.53	2.46
192	SLD 12	261	-1730	13955	62.2	-24.53	2.46
192	SLD 13	859	-1152	11325	36.34	-62.89	-0.85
192	SLD 14	859	-1152	11325	36.34	-62.89	-0.85
192	SLD 15	813	-1491	13256	51.02	-58.74	0.31
192	SLD 16	813	-1491	13256	51.02	-58.74	0.31
192	SLV 1	-1445	-173	2646	-1.77	71.7	2.21
192	SLV 2	-1445	-173	2646	-1.77	71.7	2.21
192	SLV 3	-1553	-966	7160	32.49	81.4	5.15
192	SLV 4	-1553	-966	7160	32.49	81.4	5.15
192	SLV 5	-185	382	997	-27.88	-6.4	-3.19
192	SLV 6	-185	382	997	-27.88	-6.4	-3.19
192	SLV 7	-543	-2259	16045	86.35	25.93	6.64
192	SLV 8	-543	-2259	16045	86.35	25.93	6.64
192	SLV 9	789	66	4098	-15.98	-63.64	-4.87
192	SLV 10	789	66	4098	-15.98	-63.64	-4.87
192	SLV 11	430	-2576	19145	98.25	-31.31	4.96
192	SLV 12	430	-2576	19145	98.25	-31.31	4.96
192	SLV 13	1798	-1227	12982	37.88	-119.11	-3.39
192	SLV 14	1798	-1227	12982	37.88	-119.11	-3.39
192	SLV 15	1691	-2020	17497	72.15	-109.41	-0.44
192	SLV 16	1691	-2020	17497	72.15	-109.41	-0.44
193	SLU 1	-1616	4	2828	0.61	-10.68	-0.28
193	SLU 2	-1590	4	2783	0.6	-10.49	-0.28
193	SLU 3	-1685	4	2949	0.63	-11.16	-0.29
193	SLU 4	-1670	4	2923	0.63	-11.04	-0.29
193	SLU 5	-1641	4	2874	0.62	-10.85	-0.29
193	SLU 6	-1736	5	3040	0.65	-11.52	-0.3
193	SLU 7	-1721	5	3013	0.64	-11.4	-0.3
193	SLU 8	-1718	4	3008	0.64	-11.41	-0.3
193	SLU 9	-1703	4	2982	0.64	-11.29	-0.29
193	SLU 10	-1894	5	3315	0.69	-12.57	-0.33
193	SLU 11	-1989	5	3481	0.72	-13.23	-0.34
193	SLU 12	-1973	5	3454	0.72	-13.12	-0.34
193	SLU 13	-1945	5	3405	0.71	-12.93	-0.34
193	SLU 14	-2040	5	3571	0.74	-13.59	-0.35
193	SLU 15	-2024	5	3544	0.73	-13.48	-0.35

Nodo	Cont.	Reazione a traslazione			Reazione a rotazione		
Ind.	N.br.	x	y	z	x	y	z
193	SLU 16	-2021	5	3540	0.73	-13.48	-0.35
193	SLU 17	-2006	5	3513	0.73	-13.37	-0.35
193	SLU 18	-2049	6	3587	0.74	-13.65	-0.35
193	SLU 19	-2034	6	3560	0.74	-13.53	-0.35
193	SLU 20	-2101	6	3677	0.75	-14.01	-0.36
193	SLU 21	-2085	6	3650	0.75	-13.9	-0.36
193	SLU 22	-1894	5	3316	0.69	-12.61	-0.32
193	SLU 23	-1868	5	3271	0.69	-12.43	-0.32
193	SLU 24	-1963	5	3437	0.72	-13.09	-0.33
193	SLU 25	-1948	5	3410	0.71	-12.98	-0.33
193	SLU 26	-1919	5	3361	0.7	-12.79	-0.33
193	SLU 27	-2014	5	3527	0.73	-13.45	-0.34
193	SLU 28	-1999	5	3501	0.73	-13.34	-0.34
193	SLU 29	-1996	5	3496	0.72	-13.34	-0.34
193	SLU 30	-1981	5	3469	0.72	-13.23	-0.34
193	SLU 31	-2172	6	3802	0.78	-14.5	-0.37
193	SLU 32	-2267	6	3968	0.81	-15.17	-0.39
193	SLU 33	-2251	6	3942	0.8	-15.05	-0.38
193	SLU 34	-2223	6	3893	0.79	-14.86	-0.38
193	SLU 35	-2318	6	4059	0.82	-15.53	-0.39
193	SLU 36	-2302	6	4032	0.82	-15.41	-0.39
193	SLU 37	-2299	6	4027	0.82	-15.42	-0.39
193	SLU 38	-2284	6	4001	0.81	-15.3	-0.39
193	SLU 39	-2327	6	4075	0.82	-15.58	-0.4
193	SLU 40	-2312	6	4048	0.82	-15.47	-0.4
193	SLU 41	-2379	6	4165	0.84	-15.94	-0.41
193	SLU 42	-2363	6	4138	0.83	-15.83	-0.4
193	SLU 43	-2005	5	3509	0.76	-13.22	-0.35
193	SLU 44	-1980	5	3465	0.76	-13.03	-0.35
193	SLU 45	-2074	5	3631	0.79	-13.7	-0.36
193	SLU 46	-2059	5	3604	0.78	-13.58	-0.36
193	SLU 47	-2031	5	3555	0.77	-13.4	-0.36
193	SLU 48	-2125	6	3721	0.8	-14.06	-0.37
193	SLU 49	-2110	6	3694	0.8	-13.95	-0.37
193	SLU 50	-2107	5	3690	0.79	-13.95	-0.37
193	SLU 51	-2092	5	3663	0.79	-13.83	-0.36
193	SLU 52	-2283	6	3996	0.85	-15.11	-0.4
193	SLU 53	-2378	6	4162	0.88	-15.77	-0.41
193	SLU 54	-2363	6	4135	0.87	-15.66	-0.41
193	SLU 55	-2334	6	4086	0.86	-15.47	-0.41
193	SLU 56	-2429	6	4252	0.89	-16.14	-0.42
193	SLU 57	-2414	6	4225	0.89	-16.02	-0.42
193	SLU 58	-2411	6	4221	0.89	-16.02	-0.42
193	SLU 59	-2396	6	4194	0.88	-15.91	-0.42
193	SLU 60	-2439	7	4268	0.89	-16.19	-0.42
193	SLU 61	-2424	7	4241	0.89	-16.08	-0.42
193	SLU 62	-2490	7	4358	0.91	-16.55	-0.43
193	SLU 63	-2475	7	4332	0.9	-16.44	-0.43
193	SLU 64	-2283	6	3997	0.85	-15.16	-0.39
193	SLU 65	-2258	6	3952	0.84	-14.97	-0.39
193	SLU 66	-2352	6	4118	0.87	-15.63	-0.4
193	SLU 67	-2337	6	4092	0.87	-15.52	-0.4
193	SLU 68	-2309	6	4043	0.86	-15.33	-0.4
193	SLU 69	-2403	6	4209	0.89	-15.99	-0.41
193	SLU 70	-2388	6	4182	0.88	-15.88	-0.41
193	SLU 71	-2385	6	4177	0.88	-15.88	-0.41
193	SLU 72	-2370	6	4151	0.87	-15.77	-0.41
193	SLU 73	-2561	7	4484	0.93	-17.04	-0.44
193	SLU 74	-2656	7	4650	0.96	-17.71	-0.46
193	SLU 75	-2641	7	4623	0.96	-17.59	-0.45
193	SLU 76	-2613	7	4574	0.95	-17.41	-0.45
193	SLU 77	-2707	7	4740	0.98	-18.07	-0.46
193	SLU 78	-2692	7	4713	0.97	-17.96	-0.46
193	SLU 79	-2689	7	4709	0.97	-17.96	-0.46
193	SLU 80	-2674	7	4682	0.97	-17.84	-0.46
193	SLU 81	-2717	7	4756	0.98	-18.12	-0.47
193	SLU 82	-2702	7	4729	0.97	-18.01	-0.47
193	SLU 83	-2768	7	4846	0.99	-18.48	-0.47
193	SLU 84	-2753	7	4819	0.99	-18.37	-0.47
193	SLE RA 1	-1695	4	2967	0.63	-11.23	-0.29
193	SLE RA 2	-1678	4	2938	0.63	-11.11	-0.29
193	SLE RA 3	-1741	5	3048	0.65	-11.55	-0.3
193	SLE RA 4	-1731	5	3030	0.65	-11.47	-0.3
193	SLE RA 5	-1712	5	2998	0.64	-11.35	-0.3
193	SLE RA 6	-1775	5	3108	0.66	-11.79	-0.31
193	SLE RA 7	-1765	5	3091	0.66	-11.72	-0.3
193	SLE RA 8	-1763	5	3088	0.65	-11.72	-0.3
193	SLE RA 9	-1753	5	3070	0.65	-11.64	-0.3
193	SLE RA 10	-1881	5	3292	0.69	-12.49	-0.33
193	SLE RA 11	-1944	5	3402	0.71	-12.93	-0.33
193	SLE RA 12	-1934	5	3385	0.71	-12.86	-0.33
193	SLE RA 13	-1915	5	3352	0.7	-12.73	-0.33
193	SLE RA 14	-1978	5	3463	0.72	-13.18	-0.34
193	SLE RA 15	-1968	5	3445	0.72	-13.1	-0.34
193	SLE RA 16	-1966	5	3442	0.71	-13.1	-0.34
193	SLE RA 17	-1956	5	3424	0.71	-13.03	-0.34
193	SLE RA 18	-1984	5	3473	0.72	-13.21	-0.34
193	SLE RA 19	-1974	5	3455	0.72	-13.14	-0.34
193	SLE RA 20	-2018	5	3533	0.73	-13.45	-0.35
193	SLE RA 21	-2008	5	3516	0.73	-13.38	-0.35
193	SLE FR 1	-1695	4	2967	0.63	-11.23	-0.29

Nodo	Cont.	Reazione a traslazione			Reazione a rotazione		
Ind.	N.br.	x	y	z	x	y	z
193	SLE FR 2	-1692	4	2961	0.63	-11.21	-0.29
193	SLE FR 3	-1709	4	2991	0.64	-11.33	-0.3
193	SLE FR 4	-1778	5	3113	0.66	-11.8	-0.31
193	SLE FR 5	-1795	5	3143	0.66	-11.92	-0.31
193	SLE FR 6	-1840	5	3220	0.68	-12.22	-0.32
193	SLE QP 1	-1695	4	2967	0.63	-11.23	-0.29
193	SLE QP 2	-1782	5	3119	0.66	-11.83	-0.31
193	SLD 1	-754	14	1181	-1.03	-2.02	-0.57
193	SLD 2	-754	14	1181	-1.03	-2.02	-0.57
193	SLD 3	-993	31	1575	0.08	-2.97	-1.09
193	SLD 4	-993	31	1575	0.08	-2.97	-1.09
193	SLD 5	-1112	-19	1940	-1.53	-7.45	0.4
193	SLD 6	-1112	-19	1940	-1.53	-7.45	0.4
193	SLD 7	-1906	39	3253	2.17	-10.61	-1.33
193	SLD 8	-1906	39	3253	2.17	-10.61	-1.33
193	SLD 9	-1657	-30	2985	-0.85	-13.05	0.71
193	SLD 10	-1657	-30	2985	-0.85	-13.05	0.71
193	SLD 11	-2452	29	4298	2.85	-16.2	-1.02
193	SLD 12	-2452	29	4298	2.85	-16.2	-1.02
193	SLD 13	-2571	-22	4663	1.24	-20.68	0.47
193	SLD 14	-2571	-22	4663	1.24	-20.68	0.47
193	SLD 15	-2809	-4	5057	2.35	-21.63	-0.05
193	SLD 16	-2809	-4	5057	2.35	-21.63	-0.05
193	SLV 1	574	26	-1320	-3.5	10.55	-0.9
193	SLV 2	574	26	-1320	-3.5	10.55	-0.9
193	SLV 3	16	71	-396	-0.69	8.31	-2.23
193	SLV 4	16	71	-396	-0.69	8.31	-2.23
193	SLV 5	-229	-57	387	-4.85	-1.72	1.53
193	SLV 6	-229	-57	387	-4.85	-1.72	1.53
193	SLV 7	-2089	93	3465	4.51	-9.18	-2.9
193	SLV 8	-2089	93	3465	4.51	-9.18	-2.9
193	SLV 9	-1474	-83	2773	-3.2	-14.48	2.29
193	SLV 10	-1474	-83	2773	-3.2	-14.48	2.29
193	SLV 11	-3335	67	5851	6.16	-21.93	-2.15
193	SLV 12	-3335	67	5851	6.16	-21.93	-2.15
193	SLV 13	-3579	-61	6634	2.01	-31.96	1.61
193	SLV 14	-3579	-61	6634	2.01	-31.96	1.61
193	SLV 15	-4138	-16	7558	4.81	-34.2	0.28
193	SLV 16	-4138	-16	7558	4.81	-34.2	0.28
194	SLU 1	656	-7	985	0.92	1.69	-0.1
194	SLU 2	648	-7	966	0.93	1.62	-0.1
194	SLU 3	677	-7	1000	0.95	1.65	-0.1
194	SLU 4	672	-7	989	0.95	1.61	-0.1
194	SLU 5	662	-7	969	0.94	1.55	-0.1
194	SLU 6	691	-7	1003	0.97	1.58	-0.11
194	SLU 7	686	-7	992	0.97	1.53	-0.11
194	SLU 8	684	-7	990	0.96	1.54	-0.1
194	SLU 9	679	-7	979	0.96	1.5	-0.1
194	SLU 10	771	-8	1144	1.09	1.92	-0.12
194	SLU 11	800	-8	1178	1.11	1.95	-0.12
194	SLU 12	795	-8	1167	1.11	1.91	-0.12
194	SLU 13	785	-8	1147	1.11	1.85	-0.12
194	SLU 14	814	-8	1181	1.13	1.88	-0.13
194	SLU 15	809	-8	1170	1.13	1.84	-0.12
194	SLU 16	807	-8	1168	1.12	1.84	-0.12
194	SLU 17	802	-8	1157	1.12	1.8	-0.12
194	SLU 18	832	-8	1239	1.15	2.12	-0.13
194	SLU 19	827	-8	1228	1.15	2.08	-0.13
194	SLU 20	846	-8	1242	1.17	2.05	-0.13
194	SLU 21	841	-8	1231	1.17	2	-0.13
194	SLU 22	756	-8	1120	1.05	1.9	-0.12
194	SLU 23	748	-8	1102	1.05	1.83	-0.11
194	SLU 24	777	-8	1135	1.07	1.86	-0.12
194	SLU 25	772	-8	1124	1.07	1.82	-0.12
194	SLU 26	762	-8	1104	1.07	1.76	-0.12
194	SLU 27	791	-8	1138	1.09	1.78	-0.12
194	SLU 28	786	-8	1127	1.09	1.74	-0.12
194	SLU 29	784	-8	1126	1.08	1.75	-0.12
194	SLU 30	779	-8	1114	1.09	1.71	-0.12
194	SLU 31	871	-9	1280	1.21	2.13	-0.13
194	SLU 32	900	-9	1313	1.23	2.16	-0.14
194	SLU 33	895	-9	1302	1.24	2.12	-0.14
194	SLU 34	885	-9	1282	1.23	2.06	-0.14
194	SLU 35	914	-9	1316	1.25	2.09	-0.14
194	SLU 36	909	-9	1305	1.25	2.04	-0.14
194	SLU 37	907	-9	1304	1.25	2.05	-0.14
194	SLU 38	902	-9	1292	1.25	2.01	-0.14
194	SLU 39	931	-9	1375	1.28	2.33	-0.14
194	SLU 40	927	-9	1363	1.28	2.29	-0.14
194	SLU 41	945	-9	1377	1.3	2.25	-0.15
194	SLU 42	941	-9	1366	1.3	2.21	-0.15
194	SLU 43	819	-8	1234	1.16	2.12	-0.12
194	SLU 44	811	-8	1215	1.16	2.06	-0.12
194	SLU 45	840	-9	1249	1.18	2.08	-0.13
194	SLU 46	835	-9	1238	1.18	2.04	-0.13
194	SLU 47	825	-9	1218	1.18	1.98	-0.13
194	SLU 48	854	-9	1252	1.2	2.01	-0.13
194	SLU 49	849	-9	1241	1.2	1.97	-0.13
194	SLU 50	847	-9	1239	1.19	1.98	-0.13
194	SLU 51	842	-9	1228	1.2	1.94	-0.13
194	SLU 52	933	-9	1393	1.32	2.36	-0.14

Nodo	Cont.	Reazione a traslazione			Reazione a rotazione		
Ind.	N.br.	x	y	z	x	y	z
194	SLU 53	963	-10	1427	1.34	2.38	-0.15
194	SLU 54	958	-10	1416	1.35	2.34	-0.15
194	SLU 55	948	-10	1396	1.34	2.28	-0.14
194	SLU 56	977	-10	1430	1.36	2.31	-0.15
194	SLU 57	972	-10	1419	1.36	2.27	-0.15
194	SLU 58	970	-10	1417	1.36	2.28	-0.15
194	SLU 59	965	-10	1406	1.36	2.24	-0.15
194	SLU 60	994	-10	1488	1.39	2.55	-0.15
194	SLU 61	989	-10	1477	1.39	2.51	-0.15
194	SLU 62	1008	-10	1491	1.41	2.48	-0.15
194	SLU 63	1003	-10	1480	1.41	2.44	-0.15
194	SLU 64	919	-9	1369	1.28	2.33	-0.14
194	SLU 65	911	-9	1351	1.28	2.27	-0.14
194	SLU 66	940	-10	1384	1.31	2.29	-0.14
194	SLU 67	935	-10	1373	1.31	2.25	-0.14
194	SLU 68	925	-9	1353	1.3	2.19	-0.14
194	SLU 69	954	-10	1387	1.33	2.22	-0.15
194	SLU 70	949	-10	1376	1.33	2.18	-0.15
194	SLU 71	947	-10	1375	1.32	2.19	-0.15
194	SLU 72	942	-10	1364	1.32	2.15	-0.14
194	SLU 73	1033	-10	1529	1.45	2.57	-0.16
194	SLU 74	1062	-11	1563	1.47	2.59	-0.16
194	SLU 75	1058	-11	1551	1.47	2.55	-0.16
194	SLU 76	1047	-11	1531	1.46	2.49	-0.16
194	SLU 77	1077	-11	1565	1.49	2.52	-0.17
194	SLU 78	1072	-11	1554	1.49	2.48	-0.17
194	SLU 79	1070	-11	1553	1.48	2.49	-0.17
194	SLU 80	1065	-11	1542	1.48	2.45	-0.16
194	SLU 81	1094	-11	1624	1.51	2.76	-0.17
194	SLU 82	1089	-11	1612	1.51	2.72	-0.17
194	SLU 83	1108	-11	1626	1.53	2.69	-0.17
194	SLU 84	1103	-11	1615	1.53	2.65	-0.17
194	SLE RA 1	685	-7	1024	0.96	1.75	-0.1
194	SLE RA 2	679	-7	1011	0.96	1.7	-0.1
194	SLE RA 3	699	-7	1034	0.98	1.72	-0.11
194	SLE RA 4	696	-7	1026	0.98	1.7	-0.11
194	SLE RA 5	689	-7	1013	0.97	1.66	-0.11
194	SLE RA 6	708	-7	1036	0.99	1.67	-0.11
194	SLE RA 7	705	-7	1028	0.99	1.65	-0.11
194	SLE RA 8	704	-7	1027	0.98	1.65	-0.11
194	SLE RA 9	700	-7	1020	0.98	1.62	-0.11
194	SLE RA 10	761	-8	1130	1.07	1.9	-0.12
194	SLE RA 11	781	-8	1152	1.08	1.92	-0.12
194	SLE RA 12	777	-8	1145	1.08	1.9	-0.12
194	SLE RA 13	771	-8	1132	1.08	1.86	-0.12
194	SLE RA 14	790	-8	1154	1.1	1.87	-0.12
194	SLE RA 15	787	-8	1147	1.1	1.85	-0.12
194	SLE RA 16	785	-8	1146	1.09	1.85	-0.12
194	SLE RA 17	782	-8	1138	1.09	1.82	-0.12
194	SLE RA 18	802	-8	1193	1.11	2.04	-0.12
194	SLE RA 19	798	-8	1186	1.11	2.01	-0.12
194	SLE RA 20	811	-8	1195	1.12	1.99	-0.13
194	SLE RA 21	808	-8	1187	1.13	1.96	-0.12
194	SLE FR 1	685	-7	1024	0.96	1.75	-0.1
194	SLE FR 2	684	-7	1021	0.96	1.74	-0.1
194	SLE FR 3	689	-7	1024	0.96	1.73	-0.11
194	SLE FR 4	719	-7	1072	1	1.83	-0.11
194	SLE FR 5	724	-7	1075	1.01	1.82	-0.11
194	SLE FR 6	743	-7	1108	1.03	1.89	-0.11
194	SLE QP 1	685	-7	1024	0.96	1.75	-0.1
194	SLE QP 2	720	-7	1074	1	1.84	-0.11
194	SLD 1	649	-24	2458	2.82	10.46	-0.02
194	SLD 2	649	-24	2458	2.82	10.46	-0.02
194	SLD 3	753	-28	2654	3.32	11.05	-0.04
194	SLD 4	753	-28	2654	3.32	11.05	-0.04
194	SLD 5	541	-6	1191	0.79	3.52	-0.05
194	SLD 6	541	-6	1191	0.79	3.52	-0.05
194	SLD 7	888	-19	1847	2.46	5.5	-0.13
194	SLD 8	888	-19	1847	2.46	5.5	-0.13
194	SLD 9	552	5	302	-0.45	-1.83	-0.09
194	SLD 10	552	5	302	-0.45	-1.83	-0.09
194	SLD 11	899	-8	958	1.22	0.15	-0.17
194	SLD 12	899	-8	958	1.22	0.15	-0.17
194	SLD 13	686	13	-505	-1.32	-7.38	-0.18
194	SLD 14	686	13	-505	-1.32	-7.38	-0.18
194	SLD 15	790	9	-309	-0.81	-6.79	-0.2
194	SLD 16	790	9	-309	-0.81	-6.79	-0.2
194	SLV 1	556	-47	4219	5.36	21.46	0.11
194	SLV 2	556	-47	4219	5.36	21.46	0.11
194	SLV 3	798	-57	4679	6.58	22.87	0.05
194	SLV 4	798	-57	4679	6.58	22.87	0.05
194	SLV 5	303	-5	1321	0.47	5.59	0.04
194	SLV 6	303	-5	1321	0.47	5.59	0.04
194	SLV 7	1111	-37	2853	4.52	10.28	-0.15
194	SLV 8	1111	-37	2853	4.52	10.28	-0.15
194	SLV 9	329	22	-704	-2.51	-6.61	-0.07
194	SLV 10	329	22	-704	-2.51	-6.61	-0.07
194	SLV 11	1137	-10	828	1.54	-1.92	-0.26
194	SLV 12	1137	-10	828	1.54	-1.92	-0.26
194	SLV 13	642	42	-2530	-4.57	-19.2	-0.27
194	SLV 14	642	42	-2530	-4.57	-19.2	-0.27

Nodo	Cont.	Reazione a traslazione			Reazione a rotazione		
Ind.	N.br.	x	y	z	x	y	z
194	SLV 15	884	33	-2070	-3.36	-17.79	-0.33
194	SLV 16	884	33	-2070	-3.36	-17.79	-0.33
195	SLU 1	4	-273	3346	6.19	2.69	1.89
195	SLU 2	4	-271	3306	6.16	2.61	1.87
195	SLU 3	5	-280	3450	6.31	2.59	1.94
195	SLU 4	5	-279	3426	6.29	2.54	1.92
195	SLU 5	5	-275	3375	6.23	2.47	1.9
195	SLU 6	6	-285	3519	6.38	2.45	1.97
195	SLU 7	6	-283	3495	6.36	2.4	1.96
195	SLU 8	6	-282	3484	6.34	2.41	1.95
195	SLU 9	6	-281	3460	6.32	2.36	1.94
195	SLU 10	5	-323	3922	7.38	3.08	2.23
195	SLU 11	6	-332	4066	7.53	3.06	2.3
195	SLU 12	6	-331	4042	7.51	3.01	2.29
195	SLU 13	6	-328	3991	7.45	2.94	2.26
195	SLU 14	7	-337	4135	7.6	2.92	2.33
195	SLU 15	7	-335	4111	7.58	2.87	2.32
195	SLU 16	7	-335	4100	7.56	2.88	2.31
195	SLU 17	7	-333	4076	7.54	2.83	2.3
195	SLU 18	5	-348	4226	7.94	3.36	2.41
195	SLU 19	5	-346	4202	7.91	3.31	2.39
195	SLU 20	6	-352	4295	8.01	3.22	2.44
195	SLU 21	6	-351	4271	7.99	3.17	2.42
195	SLU 22	6	-309	3842	6.89	2.89	2.14
195	SLU 23	6	-307	3802	6.86	2.81	2.12
195	SLU 24	6	-316	3946	7.01	2.79	2.19
195	SLU 25	6	-315	3922	6.99	2.74	2.18
195	SLU 26	7	-311	3871	6.93	2.67	2.15
195	SLU 27	7	-321	4015	7.08	2.65	2.22
195	SLU 28	7	-319	3991	7.06	2.6	2.21
195	SLU 29	7	-318	3980	7.04	2.61	2.2
195	SLU 30	7	-317	3956	7.02	2.56	2.19
195	SLU 31	7	-359	4418	8.08	3.28	2.48
195	SLU 32	7	-368	4562	8.23	3.26	2.55
195	SLU 33	7	-367	4538	8.21	3.21	2.54
195	SLU 34	7	-364	4487	8.15	3.14	2.51
195	SLU 35	8	-373	4631	8.3	3.12	2.58
195	SLU 36	8	-371	4607	8.28	3.07	2.57
195	SLU 37	8	-371	4596	8.26	3.09	2.57
195	SLU 38	8	-369	4572	8.24	3.03	2.55
195	SLU 39	7	-384	4722	8.64	3.57	2.66
195	SLU 40	7	-382	4698	8.61	3.52	2.65
195	SLU 41	8	-388	4791	8.71	3.43	2.69
195	SLU 42	8	-387	4767	8.69	3.38	2.68
195	SLU 43	4	-343	4180	7.81	3.43	2.37
195	SLU 44	5	-341	4140	7.77	3.34	2.35
195	SLU 45	5	-350	4283	7.93	3.33	2.42
195	SLU 46	5	-348	4259	7.9	3.28	2.4
195	SLU 47	5	-345	4209	7.85	3.2	2.38
195	SLU 48	6	-354	4353	8	3.19	2.45
195	SLU 49	6	-353	4329	7.98	3.14	2.43
195	SLU 50	6	-352	4318	7.96	3.15	2.43
195	SLU 51	6	-351	4294	7.94	3.1	2.42
195	SLU 52	6	-393	4756	8.99	3.81	2.71
195	SLU 53	6	-402	4899	9.15	3.8	2.78
195	SLU 54	6	-401	4875	9.12	3.75	2.77
195	SLU 55	6	-397	4825	9.07	3.67	2.74
195	SLU 56	7	-407	4968	9.22	3.66	2.81
195	SLU 57	7	-405	4944	9.2	3.61	2.8
195	SLU 58	7	-404	4934	9.18	3.62	2.79
195	SLU 59	7	-403	4910	9.16	3.57	2.78
195	SLU 60	6	-418	5060	9.56	4.1	2.89
195	SLU 61	6	-416	5036	9.53	4.05	2.87
195	SLU 62	7	-422	5129	9.63	3.96	2.92
195	SLU 63	7	-421	5105	9.61	3.91	2.9
195	SLU 64	6	-379	4676	8.51	3.63	2.62
195	SLU 65	6	-376	4636	8.47	3.55	2.6
195	SLU 66	7	-386	4780	8.63	3.53	2.67
195	SLU 67	7	-384	4756	8.6	3.48	2.66
195	SLU 68	7	-381	4705	8.55	3.41	2.63
195	SLU 69	8	-390	4849	8.7	3.39	2.7
195	SLU 70	8	-389	4825	8.68	3.34	2.69
195	SLU 71	8	-388	4814	8.66	3.35	2.68
195	SLU 72	8	-387	4790	8.64	3.3	2.67
195	SLU 73	7	-429	5252	9.69	4.02	2.96
195	SLU 74	8	-438	5395	9.85	4	3.03
195	SLU 75	8	-437	5371	9.82	3.95	3.02
195	SLU 76	8	-433	5321	9.77	3.88	2.99
195	SLU 77	9	-443	5464	9.92	3.86	3.06
195	SLU 78	9	-441	5440	9.9	3.81	3.05
195	SLU 79	9	-440	5430	9.88	3.82	3.05
195	SLU 80	9	-439	5406	9.86	3.77	3.03
195	SLU 81	8	-454	5556	10.26	4.31	3.14
195	SLU 82	8	-452	5532	10.23	4.25	3.13
195	SLU 83	8	-458	5625	10.33	4.17	3.17
195	SLU 84	8	-457	5601	10.31	4.11	3.16
195	SLE RA 1	4	-284	3488	6.39	2.75	1.96
195	SLE RA 2	4	-282	3461	6.37	2.69	1.95
195	SLE RA 3	5	-288	3557	6.47	2.68	1.99
195	SLE RA 4	5	-287	3541	6.46	2.65	1.98
195	SLE RA 5	5	-285	3507	6.42	2.6	1.97

Nodo	Cont.	Reazione a traslazione			Reazione a rotazione		
Ind.	N.br.	x	y	z	x	y	z
195	SLE RA 6	5	-291	3603	6.52	2.59	2.01
195	SLE RA 7	6	-290	3587	6.51	2.55	2.01
195	SLE RA 8	5	-290	3580	6.49	2.56	2
195	SLE RA 9	6	-289	3564	6.48	2.53	1.99
195	SLE RA 10	5	-317	3872	7.18	3.01	2.19
195	SLE RA 11	6	-323	3967	7.28	3	2.23
195	SLE RA 12	6	-322	3951	7.27	2.96	2.23
195	SLE RA 13	6	-320	3918	7.23	2.91	2.21
195	SLE RA 14	6	-326	4014	7.33	2.9	2.26
195	SLE RA 15	6	-325	3998	7.32	2.87	2.25
195	SLE RA 16	6	-324	3990	7.31	2.88	2.24
195	SLE RA 17	6	-323	3974	7.29	2.84	2.24
195	SLE RA 18	5	-333	4074	7.56	3.2	2.31
195	SLE RA 19	5	-332	4058	7.54	3.16	2.3
195	SLE RA 20	6	-336	4120	7.61	3.1	2.33
195	SLE RA 21	6	-335	4104	7.59	3.07	2.32
195	SLE FR 1	4	-284	3488	6.39	2.75	1.96
195	SLE FR 2	4	-283	3482	6.39	2.74	1.96
195	SLE FR 3	5	-285	3506	6.41	2.71	1.97
195	SLE FR 4	5	-298	3658	6.74	2.87	2.06
195	SLE FR 5	5	-300	3682	6.76	2.85	2.07
195	SLE FR 6	5	-308	3781	6.98	2.97	2.13
195	SLE QP 1	4	-284	3488	6.39	2.75	1.96
195	SLE QP 2	5	-299	3664	6.74	2.88	2.06
195	SLD 1	-80	-283	3294	5.97	16.41	2.12
195	SLD 2	-80	-283	3294	5.97	16.41	2.12
195	SLD 3	-87	-369	3834	9.54	17.49	2.65
195	SLD 4	-87	-369	3834	9.54	17.49	2.65
195	SLD 5	-10	-164	2735	1.11	5.3	1.28
195	SLD 6	-10	-164	2735	1.11	5.3	1.28
195	SLD 7	-34	-450	4533	12.98	8.9	3.04
195	SLD 8	-34	-450	4533	12.98	8.9	3.04
195	SLD 9	43	-147	2794	0.5	-3.14	1.09
195	SLD 10	43	-147	2794	0.5	-3.14	1.09
195	SLD 11	20	-433	4593	12.38	0.47	2.85
195	SLD 12	20	-433	4593	12.38	0.47	2.85
195	SLD 13	97	-228	3494	3.95	-11.72	1.48
195	SLD 14	97	-228	3494	3.95	-11.72	1.48
195	SLD 15	90	-314	4033	7.51	-10.64	2.01
195	SLD 16	90	-314	4033	7.51	-10.64	2.01
195	SLV 1	-189	-265	2800	5	33.68	2.21
195	SLV 2	-189	-265	2800	5	33.68	2.21
195	SLV 3	-205	-465	4056	13.33	36.23	3.45
195	SLV 4	-205	-465	4056	13.33	36.23	3.45
195	SLV 5	-29	16	1500	-6.41	8.26	0.23
195	SLV 6	-29	16	1500	-6.41	8.26	0.23
195	SLV 7	-83	-652	5686	21.35	16.75	4.36
195	SLV 8	-83	-652	5686	21.35	16.75	4.36
195	SLV 9	92	55	1641	-7.86	-10.98	-0.23
195	SLV 10	92	55	1641	-7.86	-10.98	-0.23
195	SLV 11	38	-613	5828	19.9	-2.49	3.9
195	SLV 12	38	-613	5828	19.9	-2.49	3.9
195	SLV 13	214	-132	3272	0.16	-30.46	0.68
195	SLV 14	214	-132	3272	0.16	-30.46	0.68
195	SLV 15	198	-332	4528	8.49	-27.91	1.92
195	SLV 16	198	-332	4528	8.49	-27.91	1.92
196	SLU 1	-767	3	1266	-0.03	-3.1	-0.01
196	SLU 2	-760	3	1256	-0.03	-3.09	-0.02
196	SLU 3	-799	3	1321	-0.03	-3.26	-0.02
196	SLU 4	-795	3	1315	-0.04	-3.26	-0.02
196	SLU 5	-784	3	1300	-0.04	-3.22	-0.02
196	SLU 6	-823	3	1365	-0.04	-3.4	-0.02
196	SLU 7	-819	3	1359	-0.04	-3.39	-0.02
196	SLU 8	-816	3	1353	-0.04	-3.37	-0.02
196	SLU 9	-812	3	1347	-0.04	-3.37	-0.02
196	SLU 10	-904	4	1492	-0.03	-3.68	-0.02
196	SLU 11	-942	4	1557	-0.03	-3.85	-0.02
196	SLU 12	-938	4	1551	-0.03	-3.85	-0.02
196	SLU 13	-928	4	1536	-0.03	-3.81	-0.02
196	SLU 14	-967	4	1601	-0.03	-3.99	-0.02
196	SLU 15	-963	4	1595	-0.03	-3.98	-0.02
196	SLU 16	-959	4	1589	-0.03	-3.96	-0.02
196	SLU 17	-955	4	1583	-0.03	-3.96	-0.02
196	SLU 18	-972	4	1603	-0.02	-3.94	-0.01
196	SLU 19	-968	4	1597	-0.03	-3.93	-0.02
196	SLU 20	-997	4	1647	-0.03	-4.08	-0.02
196	SLU 21	-993	4	1641	-0.03	-4.07	-0.02
196	SLU 22	-890	4	1469	-0.04	-3.62	-0.02
196	SLU 23	-883	4	1460	-0.04	-3.61	-0.02
196	SLU 24	-921	4	1525	-0.04	-3.79	-0.02
196	SLU 25	-917	4	1519	-0.05	-3.78	-0.02
196	SLU 26	-907	4	1504	-0.05	-3.75	-0.02
196	SLU 27	-946	4	1569	-0.05	-3.92	-0.02
196	SLU 28	-942	4	1563	-0.05	-3.92	-0.02
196	SLU 29	-938	4	1557	-0.05	-3.9	-0.02
196	SLU 30	-934	4	1551	-0.05	-3.89	-0.02
196	SLU 31	-1027	4	1696	-0.04	-4.2	-0.02
196	SLU 32	-1065	4	1761	-0.04	-4.38	-0.02
196	SLU 33	-1061	4	1755	-0.04	-4.37	-0.02
196	SLU 34	-1051	4	1740	-0.04	-4.34	-0.02
196	SLU 35	-1090	4	1805	-0.04	-4.51	-0.02

Nodo	Cont.	Reazione a traslazione			Reazione a rotazione		
Ind.	N.br.	x	y	z	x	y	z
196	SLU 36	-1086	4	1799	-0.04	-4.51	-0.02
196	SLU 37	-1082	4	1793	-0.04	-4.49	-0.02
196	SLU 38	-1078	4	1787	-0.04	-4.48	-0.02
196	SLU 39	-1095	4	1807	-0.03	-4.47	-0.02
196	SLU 40	-1091	4	1801	-0.04	-4.46	-0.02
196	SLU 41	-1119	4	1850	-0.04	-4.6	-0.02
196	SLU 42	-1115	4	1845	-0.04	-4.59	-0.02
196	SLU 43	-955	4	1575	-0.03	-3.85	-0.02
196	SLU 44	-948	4	1566	-0.04	-3.84	-0.02
196	SLU 45	-986	4	1631	-0.04	-4.01	-0.02
196	SLU 46	-982	4	1625	-0.04	-4.01	-0.02
196	SLU 47	-972	4	1610	-0.04	-3.97	-0.02
196	SLU 48	-1011	4	1675	-0.04	-4.15	-0.02
196	SLU 49	-1007	4	1669	-0.04	-4.14	-0.02
196	SLU 50	-1003	4	1663	-0.04	-4.13	-0.02
196	SLU 51	-999	4	1657	-0.04	-4.12	-0.02
196	SLU 52	-1092	4	1802	-0.03	-4.43	-0.02
196	SLU 53	-1130	4	1867	-0.03	-4.6	-0.02
196	SLU 54	-1126	5	1861	-0.04	-4.6	-0.02
196	SLU 55	-1116	5	1846	-0.04	-4.56	-0.02
196	SLU 56	-1155	5	1911	-0.04	-4.74	-0.02
196	SLU 57	-1151	5	1905	-0.04	-4.73	-0.02
196	SLU 58	-1147	5	1899	-0.04	-4.71	-0.02
196	SLU 59	-1143	5	1893	-0.04	-4.71	-0.02
196	SLU 60	-1160	5	1913	-0.03	-4.69	-0.02
196	SLU 61	-1156	5	1907	-0.03	-4.68	-0.02
196	SLU 62	-1185	5	1956	-0.03	-4.83	-0.02
196	SLU 63	-1181	5	1951	-0.03	-4.82	-0.02
196	SLU 64	-1077	4	1779	-0.05	-4.37	-0.02
196	SLU 65	-1071	4	1770	-0.05	-4.36	-0.02
196	SLU 66	-1109	5	1835	-0.05	-4.54	-0.02
196	SLU 67	-1105	5	1829	-0.05	-4.53	-0.02
196	SLU 68	-1095	5	1813	-0.05	-4.5	-0.02
196	SLU 69	-1134	5	1878	-0.05	-4.68	-0.02
196	SLU 70	-1130	5	1873	-0.05	-4.67	-0.02
196	SLU 71	-1126	5	1867	-0.05	-4.65	-0.02
196	SLU 72	-1122	5	1861	-0.05	-4.64	-0.02
196	SLU 73	-1215	5	2006	-0.04	-4.95	-0.02
196	SLU 74	-1253	5	2071	-0.04	-5.13	-0.02
196	SLU 75	-1249	5	2065	-0.05	-5.12	-0.02
196	SLU 76	-1239	5	2049	-0.05	-5.09	-0.02
196	SLU 77	-1278	5	2114	-0.05	-5.26	-0.02
196	SLU 78	-1274	5	2109	-0.05	-5.26	-0.02
196	SLU 79	-1270	5	2103	-0.05	-5.24	-0.02
196	SLU 80	-1266	5	2097	-0.05	-5.23	-0.02
196	SLU 81	-1283	5	2116	-0.04	-5.22	-0.02
196	SLU 82	-1279	5	2111	-0.04	-5.21	-0.02
196	SLU 83	-1307	5	2160	-0.04	-5.35	-0.02
196	SLU 84	-1303	5	2154	-0.04	-5.35	-0.02
196	SLE RA 1	-802	3	1324	-0.03	-3.25	-0.02
196	SLE RA 2	-797	3	1317	-0.03	-3.24	-0.02
196	SLE RA 3	-823	3	1361	-0.03	-3.36	-0.02
196	SLE RA 4	-820	3	1357	-0.04	-3.35	-0.02
196	SLE RA 5	-814	3	1347	-0.04	-3.33	-0.02
196	SLE RA 6	-839	3	1390	-0.04	-3.45	-0.02
196	SLE RA 7	-837	3	1386	-0.04	-3.45	-0.02
196	SLE RA 8	-834	3	1382	-0.04	-3.43	-0.02
196	SLE RA 9	-832	3	1378	-0.04	-3.43	-0.02
196	SLE RA 10	-893	4	1475	-0.03	-3.63	-0.02
196	SLE RA 11	-919	4	1518	-0.03	-3.75	-0.02
196	SLE RA 12	-916	4	1514	-0.03	-3.75	-0.02
196	SLE RA 13	-910	4	1504	-0.03	-3.73	-0.02
196	SLE RA 14	-935	4	1547	-0.03	-3.84	-0.02
196	SLE RA 15	-933	4	1543	-0.04	-3.84	-0.02
196	SLE RA 16	-930	4	1540	-0.03	-3.83	-0.02
196	SLE RA 17	-928	4	1536	-0.04	-3.82	-0.02
196	SLE RA 18	-939	4	1549	-0.03	-3.81	-0.01
196	SLE RA 19	-936	4	1545	-0.03	-3.81	-0.02
196	SLE RA 20	-955	4	1578	-0.03	-3.9	-0.02
196	SLE RA 21	-952	4	1574	-0.03	-3.9	-0.02
196	SLE FR 1	-802	3	1324	-0.03	-3.25	-0.02
196	SLE FR 2	-801	3	1323	-0.03	-3.25	-0.02
196	SLE FR 3	-808	3	1335	-0.03	-3.29	-0.02
196	SLE FR 4	-842	3	1390	-0.03	-3.42	-0.02
196	SLE FR 5	-849	3	1403	-0.03	-3.45	-0.02
196	SLE FR 6	-870	4	1436	-0.03	-3.53	-0.02
196	SLE QP 1	-802	3	1324	-0.03	-3.25	-0.02
196	SLE QP 2	-843	3	1391	-0.03	-3.42	-0.02
196	SLD 1	-150	17	-45	-1.04	2.19	-0.44
196	SLD 2	-150	17	-45	-1.04	2.19	-0.44
196	SLD 3	-254	20	121	-0.82	1.75	-0.36
196	SLD 4	-254	20	121	-0.82	1.75	-0.36
196	SLD 5	-476	3	708	-0.66	-1.06	-0.26
196	SLD 6	-476	3	708	-0.66	-1.06	-0.26
196	SLD 7	-825	13	1262	0.05	-2.54	0.01
196	SLD 8	-825	13	1262	0.05	-2.54	0.01
196	SLD 9	-861	-7	1520	-0.12	-4.29	-0.04
196	SLD 10	-861	-7	1520	-0.12	-4.29	-0.04
196	SLD 11	-1210	4	2074	0.59	-5.77	0.23
196	SLD 12	-1210	4	2074	0.59	-5.77	0.23
196	SLD 13	-1432	-14	2662	0.76	-8.58	0.33

Nodo	Cont.	Reazione a traslazione			Reazione a rotazione		
Ind.	N.br.	x	y	z	x	y	z
196	SLD 14	-1432	-14	2662	0.76	-8.58	0.33
196	SLD 15	-1536	-10	2828	0.97	-9.03	0.41
196	SLD 16	-1536	-10	2828	0.97	-9.03	0.41
196	SLV 1	740	36	-1887	-2.45	9.39	-1.03
196	SLV 2	740	36	-1887	-2.45	9.39	-1.03
196	SLV 3	496	44	-1499	-1.93	8.34	-0.83
196	SLV 4	496	44	-1499	-1.93	8.34	-0.83
196	SLV 5	2	1	-182	-1.55	2.01	-0.62
196	SLV 6	2	1	-182	-1.55	2.01	-0.62
196	SLV 7	-812	28	1114	0.19	-1.47	0.04
196	SLV 8	-812	28	1114	0.19	-1.47	0.04
196	SLV 9	-874	-21	1669	-0.25	-5.36	-0.07
196	SLV 10	-874	-21	1669	-0.25	-5.36	-0.07
196	SLV 11	-1688	5	2964	1.48	-8.84	0.59
196	SLV 12	-1688	5	2964	1.48	-8.84	0.59
196	SLV 13	-2181	-37	4281	1.86	-15.18	0.8
196	SLV 14	-2181	-37	4281	1.86	-15.18	0.8
196	SLV 15	-2425	-30	4670	2.39	-16.23	1
196	SLV 16	-2425	-30	4670	2.39	-16.23	1
197	SLU 1	1273	-15	2738	2.99	21.61	-0.19
197	SLU 2	1243	-14	2661	2.94	20.71	-0.18
197	SLU 3	1311	-15	2808	3.08	22.01	-0.19
197	SLU 4	1293	-15	2762	3.06	21.47	-0.19
197	SLU 5	1264	-15	2697	3	20.84	-0.19
197	SLU 6	1332	-15	2843	3.14	22.15	-0.2
197	SLU 7	1314	-15	2798	3.12	21.61	-0.19
197	SLU 8	1316	-15	2808	3.1	21.88	-0.19
197	SLU 9	1297	-15	2762	3.08	21.34	-0.19
197	SLU 10	1476	-17	3164	3.43	25.01	-0.22
197	SLU 11	1544	-17	3311	3.57	26.31	-0.23
197	SLU 12	1526	-17	3265	3.54	25.77	-0.22
197	SLU 13	1497	-17	3199	3.49	25.14	-0.22
197	SLU 14	1565	-18	3346	3.63	26.44	-0.23
197	SLU 15	1547	-18	3300	3.6	25.9	-0.23
197	SLU 16	1549	-18	3311	3.59	26.17	-0.23
197	SLU 17	1531	-17	3265	3.56	25.63	-0.22
197	SLU 18	1606	-18	3456	3.68	27.75	-0.23
197	SLU 19	1588	-18	3410	3.65	27.21	-0.23
197	SLU 20	1628	-18	3491	3.74	27.88	-0.24
197	SLU 21	1609	-18	3445	3.71	27.34	-0.24
197	SLU 22	1480	-17	3184	3.43	25.43	-0.22
197	SLU 23	1450	-17	3107	3.38	24.53	-0.21
197	SLU 24	1518	-17	3254	3.52	25.83	-0.22
197	SLU 25	1500	-17	3208	3.5	25.29	-0.22
197	SLU 26	1471	-17	3143	3.44	24.66	-0.22
197	SLU 27	1539	-18	3289	3.58	25.96	-0.22
197	SLU 28	1521	-17	3244	3.56	25.43	-0.22
197	SLU 29	1523	-17	3254	3.54	25.69	-0.22
197	SLU 30	1505	-17	3208	3.52	25.16	-0.22
197	SLU 31	1683	-19	3610	3.87	28.83	-0.25
197	SLU 32	1751	-20	3757	4.01	30.13	-0.26
197	SLU 33	1733	-20	3711	3.98	29.59	-0.25
197	SLU 34	1704	-19	3646	3.93	28.96	-0.25
197	SLU 35	1772	-20	3792	4.07	30.26	-0.26
197	SLU 36	1754	-20	3747	4.04	29.72	-0.26
197	SLU 37	1756	-20	3757	4.03	29.99	-0.26
197	SLU 38	1738	-20	3711	4	29.45	-0.25
197	SLU 39	1813	-20	3902	4.12	31.57	-0.26
197	SLU 40	1795	-20	3856	4.09	31.03	-0.26
197	SLU 41	1835	-21	3937	4.18	31.7	-0.27
197	SLU 42	1817	-20	3892	4.15	31.16	-0.27
197	SLU 43	1584	-18	3406	3.73	26.78	-0.23
197	SLU 44	1554	-18	3330	3.69	25.89	-0.23
197	SLU 45	1622	-19	3476	3.83	27.19	-0.24
197	SLU 46	1604	-19	3431	3.8	26.65	-0.23
197	SLU 47	1575	-18	3365	3.75	26.02	-0.23
197	SLU 48	1643	-19	3512	3.89	27.32	-0.24
197	SLU 49	1625	-19	3466	3.86	26.78	-0.24
197	SLU 50	1627	-19	3476	3.85	27.05	-0.24
197	SLU 51	1608	-19	3431	3.82	26.51	-0.24
197	SLU 52	1787	-20	3833	4.17	30.18	-0.26
197	SLU 53	1855	-21	3979	4.31	31.48	-0.27
197	SLU 54	1837	-21	3933	4.29	30.94	-0.27
197	SLU 55	1808	-21	3868	4.23	30.32	-0.27
197	SLU 56	1876	-21	4014	4.37	31.62	-0.27
197	SLU 57	1858	-21	3969	4.35	31.08	-0.27
197	SLU 58	1860	-21	3979	4.33	31.35	-0.27
197	SLU 59	1842	-21	3934	4.31	30.81	-0.27
197	SLU 60	1917	-22	4124	4.42	32.92	-0.28
197	SLU 61	1899	-22	4078	4.4	32.38	-0.28
197	SLU 62	1938	-22	4159	4.48	33.06	-0.28
197	SLU 63	1920	-22	4114	4.46	32.52	-0.28
197	SLU 64	1791	-20	3852	4.17	30.6	-0.26
197	SLU 65	1761	-20	3776	4.13	29.7	-0.26
197	SLU 66	1829	-21	3922	4.27	31.01	-0.27
197	SLU 67	1811	-21	3877	4.24	30.47	-0.26
197	SLU 68	1782	-20	3811	4.19	29.84	-0.26
197	SLU 69	1850	-21	3958	4.33	31.14	-0.27
197	SLU 70	1832	-21	3912	4.3	30.6	-0.27
197	SLU 71	1834	-21	3922	4.29	30.87	-0.27
197	SLU 72	1816	-21	3877	4.26	30.33	-0.27

Nodo	Cont.	Reazione a traslazione			Reazione a rotazione		
Ind.	N.br.	x	y	z	x	y	z
197	SLU 73	1994	-23	4279	4.61	34	-0.29
197	SLU 74	2062	-23	4425	4.75	35.3	-0.3
197	SLU 75	2044	-23	4380	4.73	34.76	-0.3
197	SLU 76	2015	-23	4314	4.67	34.13	-0.29
197	SLU 77	2083	-24	4461	4.81	35.44	-0.3
197	SLU 78	2065	-23	4415	4.79	34.9	-0.3
197	SLU 79	2067	-23	4425	4.77	35.17	-0.3
197	SLU 80	2049	-23	4380	4.75	34.63	-0.3
197	SLU 81	2124	-24	4570	4.86	36.74	-0.31
197	SLU 82	2106	-24	4525	4.84	36.2	-0.31
197	SLU 83	2146	-24	4606	4.92	36.87	-0.31
197	SLU 84	2127	-24	4560	4.9	36.33	-0.31
197	SLE RA 1	1332	-15	2865	3.11	22.7	-0.19
197	SLE RA 2	1312	-15	2814	3.08	22.1	-0.19
197	SLE RA 3	1357	-16	2912	3.18	22.97	-0.2
197	SLE RA 4	1345	-15	2882	3.16	22.61	-0.2
197	SLE RA 5	1326	-15	2838	3.12	22.19	-0.19
197	SLE RA 6	1372	-16	2935	3.22	23.06	-0.2
197	SLE RA 7	1360	-16	2905	3.2	22.7	-0.2
197	SLE RA 8	1361	-16	2912	3.19	22.88	-0.2
197	SLE RA 9	1349	-15	2882	3.17	22.52	-0.2
197	SLE RA 10	1468	-17	3149	3.41	24.97	-0.21
197	SLE RA 11	1513	-17	3247	3.5	25.83	-0.22
197	SLE RA 12	1501	-17	3217	3.48	25.47	-0.22
197	SLE RA 13	1482	-17	3173	3.45	25.05	-0.22
197	SLE RA 14	1527	-17	3271	3.54	25.92	-0.22
197	SLE RA 15	1515	-17	3240	3.52	25.56	-0.22
197	SLE RA 16	1516	-17	3247	3.51	25.74	-0.22
197	SLE RA 17	1504	-17	3217	3.5	25.38	-0.22
197	SLE RA 18	1555	-18	3344	3.57	26.79	-0.23
197	SLE RA 19	1542	-17	3313	3.56	26.43	-0.23
197	SLE RA 20	1569	-18	3367	3.61	26.88	-0.23
197	SLE RA 21	1557	-18	3337	3.6	26.52	-0.23
197	SLE FR 1	1332	-15	2865	3.11	22.7	-0.19
197	SLE FR 2	1328	-15	2855	3.11	22.58	-0.19
197	SLE FR 3	1338	-15	2874	3.13	22.74	-0.19
197	SLE FR 4	1395	-16	2999	3.24	23.81	-0.2
197	SLE FR 5	1405	-16	3018	3.27	23.96	-0.2
197	SLE FR 6	1443	-16	3104	3.34	24.75	-0.21
197	SLE QP 1	1332	-15	2865	3.11	22.7	-0.19
197	SLE QP 2	1399	-16	3009	3.25	23.93	-0.2
197	SLD 1	1895	-22	4864	3.99	49.8	-0.27
197	SLD 2	1895	-22	4864	3.99	49.8	-0.27
197	SLD 3	2112	-28	5293	5.14	51.34	-0.35
197	SLD 4	2112	-28	5293	5.14	51.34	-0.35
197	SLD 5	1218	-9	2916	1.74	29.36	-0.09
197	SLD 6	1218	-9	2916	1.74	29.36	-0.09
197	SLD 7	1943	-29	4344	5.55	34.48	-0.38
197	SLD 8	1943	-29	4344	5.55	34.48	-0.38
197	SLD 9	855	-3	1674	0.95	13.38	-0.03
197	SLD 10	855	-3	1674	0.95	13.38	-0.03
197	SLD 11	1580	-23	3102	4.76	18.5	-0.32
197	SLD 12	1580	-23	3102	4.76	18.5	-0.32
197	SLD 13	686	-4	725	1.36	-3.48	-0.05
197	SLD 14	686	-4	725	1.36	-3.48	-0.05
197	SLD 15	903	-10	1153	2.51	-1.94	-0.14
197	SLD 16	903	-10	1153	2.51	-1.94	-0.14
197	SLV 1	2529	-30	7228	5.05	82.66	-0.35
197	SLV 2	2529	-30	7228	5.05	82.66	-0.35
197	SLV 3	3038	-45	8232	7.78	86.33	-0.56
197	SLV 4	3038	-45	8232	7.78	86.33	-0.56
197	SLV 5	967	2	2752	-0.35	35.97	0.06
197	SLV 6	967	2	2752	-0.35	35.97	0.06
197	SLV 7	2662	-47	6098	8.75	48.23	-0.62
197	SLV 8	2662	-47	6098	8.75	48.23	-0.62
197	SLV 9	136	15	-81	-2.25	-0.37	0.21
197	SLV 10	136	15	-81	-2.25	-0.37	0.21
197	SLV 11	1832	-34	3265	6.85	11.88	-0.47
197	SLV 12	1832	-34	3265	6.85	11.88	-0.47
197	SLV 13	-240	13	-2214	-1.28	-38.48	0.15
197	SLV 14	-240	13	-2214	-1.28	-38.48	0.15
197	SLV 15	269	-1	-1211	1.45	-34.8	-0.05
197	SLV 16	269	-1	-1211	1.45	-34.8	-0.05
198	SLU 1	887	-902	8436	29.11	57.13	6.07
198	SLU 2	846	-891	8269	28.83	55.02	6
198	SLU 3	900	-932	8698	30.12	58.32	6.28
198	SLU 4	875	-925	8597	29.95	57.05	6.23
198	SLU 5	848	-910	8422	29.49	55.51	6.13
198	SLU 6	902	-951	8850	30.79	58.8	6.41
198	SLU 7	877	-945	8750	30.62	57.53	6.36
198	SLU 8	891	-940	8741	30.44	58.1	6.34
198	SLU 9	866	-934	8641	30.27	56.83	6.29
198	SLU 10	1022	-1039	9769	33.48	65.93	7.01
198	SLU 11	1076	-1080	10198	34.77	69.22	7.29
198	SLU 12	1051	-1074	10097	34.6	67.96	7.24
198	SLU 13	1024	-1058	9922	34.14	66.41	7.14
198	SLU 14	1078	-1100	10350	35.44	69.7	7.42
198	SLU 15	1053	-1093	10250	35.27	68.44	7.37
198	SLU 16	1067	-1089	10241	35.09	69	7.34
198	SLU 17	1042	-1082	10141	34.92	67.74	7.3
198	SLU 18	1138	-1114	10579	35.75	72.71	7.51

Nodo	Cont.	Reazione a traslazione			Reazione a rotazione		
Ind.	N.br.	x	y	z	x	y	z
198	SLU 19	1114	-1107	10479	35.58	71.45	7.47
198	SLU 20	1141	-1133	10732	36.42	73.19	7.65
198	SLU 21	1116	-1126	10631	36.25	71.93	7.6
198	SLU 22	1043	-1032	9767	33.19	66.8	6.96
198	SLU 23	1002	-1021	9600	32.91	64.7	6.88
198	SLU 24	1056	-1063	10028	34.2	67.99	7.16
198	SLU 25	1031	-1056	9928	34.03	66.72	7.11
198	SLU 26	1004	-1040	9752	33.57	65.18	7.01
198	SLU 27	1058	-1082	10181	34.87	68.47	7.29
198	SLU 28	1033	-1075	10080	34.7	67.2	7.25
198	SLU 29	1047	-1071	10072	34.52	67.77	7.22
198	SLU 30	1022	-1064	9971	34.35	66.5	7.17
198	SLU 31	1178	-1169	11100	37.56	75.6	7.89
198	SLU 32	1232	-1211	11528	38.85	78.89	8.17
198	SLU 33	1207	-1204	11428	38.68	77.63	8.12
198	SLU 34	1180	-1189	11252	38.22	76.08	8.02
198	SLU 35	1234	-1230	11681	39.52	79.37	8.3
198	SLU 36	1209	-1224	11580	39.35	78.11	8.25
198	SLU 37	1223	-1219	11572	39.17	78.67	8.23
198	SLU 38	1198	-1213	11471	39	77.41	8.18
198	SLU 39	1295	-1244	11910	39.83	82.38	8.4
198	SLU 40	1270	-1237	11810	39.66	81.12	8.35
198	SLU 41	1297	-1263	12062	40.5	82.86	8.53
198	SLU 42	1272	-1257	11962	40.33	81.6	8.48
198	SLU 43	1099	-1128	10511	36.45	70.96	7.59
198	SLU 44	1058	-1116	10344	36.16	68.85	7.52
198	SLU 45	1112	-1158	10773	37.46	72.14	7.8
198	SLU 46	1088	-1151	10672	37.29	70.88	7.75
198	SLU 47	1060	-1136	10496	36.83	69.33	7.65
198	SLU 48	1114	-1177	10925	38.12	72.62	7.93
198	SLU 49	1090	-1171	10825	37.95	71.36	7.88
198	SLU 50	1104	-1166	10816	37.77	71.92	7.86
198	SLU 51	1079	-1160	10716	37.6	70.65	7.81
198	SLU 52	1234	-1265	11844	40.81	79.75	8.53
198	SLU 53	1288	-1306	12273	42.11	83.05	8.81
198	SLU 54	1264	-1300	12172	41.94	81.78	8.76
198	SLU 55	1236	-1284	11996	41.48	80.23	8.66
198	SLU 56	1291	-1326	12425	42.77	83.53	8.94
198	SLU 57	1266	-1319	12325	42.6	82.26	8.89
198	SLU 58	1280	-1315	12316	42.42	82.83	8.86
198	SLU 59	1255	-1308	12216	42.25	81.56	8.82
198	SLU 60	1351	-1339	12654	43.09	86.54	9.03
198	SLU 61	1326	-1333	12554	42.92	85.27	8.99
198	SLU 62	1353	-1359	12806	43.75	87.02	9.17
198	SLU 63	1328	-1352	12706	43.58	85.75	9.12
198	SLU 64	1256	-1258	11842	40.53	80.63	8.48
198	SLU 65	1214	-1247	11675	40.24	78.52	8.4
198	SLU 66	1268	-1288	12103	41.54	81.81	8.68
198	SLU 67	1244	-1282	12003	41.37	80.55	8.63
198	SLU 68	1216	-1266	11827	40.9	79	8.53
198	SLU 69	1271	-1308	12256	42.2	82.29	8.81
198	SLU 70	1246	-1301	12155	42.03	81.03	8.77
198	SLU 71	1260	-1297	12146	41.85	81.59	8.74
198	SLU 72	1235	-1290	12046	41.68	80.33	8.69
198	SLU 73	1390	-1395	13175	44.89	89.42	9.41
198	SLU 74	1445	-1437	13603	46.19	92.72	9.69
198	SLU 75	1420	-1430	13503	46.02	91.45	9.64
198	SLU 76	1392	-1415	13327	45.56	89.91	9.54
198	SLU 77	1447	-1456	13756	46.85	93.2	9.82
198	SLU 78	1422	-1449	13655	46.68	91.93	9.77
198	SLU 79	1436	-1445	13646	46.5	92.5	9.75
198	SLU 80	1411	-1438	13546	46.33	91.23	9.7
198	SLU 81	1507	-1470	13985	47.17	96.21	9.92
198	SLU 82	1482	-1463	13884	47	94.94	9.87
198	SLU 83	1509	-1489	14137	47.83	96.69	10.05
198	SLU 84	1484	-1483	14037	47.66	95.42	10
198	SLE RA 1	932	-939	8817	30.28	59.9	6.33
198	SLE RA 2	904	-932	8705	30.09	58.49	6.28
198	SLE RA 3	940	-959	8991	30.95	60.68	6.46
198	SLE RA 4	924	-955	8924	30.84	59.84	6.43
198	SLE RA 5	905	-945	8807	30.53	58.81	6.36
198	SLE RA 6	941	-972	9092	31.39	61.01	6.55
198	SLE RA 7	925	-968	9026	31.28	60.16	6.52
198	SLE RA 8	934	-965	9020	31.16	60.54	6.5
198	SLE RA 9	918	-960	8953	31.05	59.69	6.47
198	SLE RA 10	1021	-1031	9705	33.19	65.76	6.95
198	SLE RA 11	1058	-1058	9991	34.05	67.95	7.13
198	SLE RA 12	1041	-1054	9924	33.94	67.11	7.1
198	SLE RA 13	1023	-1043	9807	33.63	66.08	7.03
198	SLE RA 14	1059	-1071	10092	34.49	68.28	7.22
198	SLE RA 15	1042	-1067	10026	34.38	67.43	7.19
198	SLE RA 16	1052	-1064	10020	34.26	67.81	7.17
198	SLE RA 17	1035	-1059	9953	34.15	66.96	7.14
198	SLE RA 18	1099	-1080	10245	34.71	70.28	7.29
198	SLE RA 19	1083	-1076	10178	34.59	69.44	7.26
198	SLE RA 20	1101	-1093	10347	35.15	70.6	7.37
198	SLE RA 21	1084	-1089	10280	35.03	69.76	7.34
198	SLE FR 1	932	-939	8817	30.28	59.9	6.33
198	SLE FR 2	926	-938	8794	30.24	59.62	6.32
198	SLE FR 3	932	-944	8857	30.45	60.02	6.36
198	SLE FR 4	976	-980	9223	31.57	62.73	6.6

Nodo	Cont.	Reazione a traslazione			Reazione a rotazione		
Ind.	N.br.	x	y	z	x	y	z
198	SLE FR 5	982	-987	9286	31.78	63.14	6.65
198	SLE FR 6	1015	-1010	9531	32.49	65.09	6.81
198	SLE QP 1	932	-939	8817	30.28	59.9	6.33
198	SLE QP 2	982	-981	9245	31.61	63.01	6.61
198	SLD 1	2301	-1053	11687	33.81	119.97	7.12
198	SLD 2	2301	-1053	11687	33.81	119.97	7.12
198	SLD 3	2363	-1367	13410	46.79	125.38	9.23
198	SLD 4	2363	-1367	13410	46.79	125.38	9.23
198	SLD 5	1284	-528	7365	12.58	71.89	3.57
198	SLD 6	1284	-528	7365	12.58	71.89	3.57
198	SLD 7	1490	-1572	13107	55.85	89.93	10.59
198	SLD 8	1490	-1572	13107	55.85	89.93	10.59
198	SLD 9	474	-391	5383	7.36	36.1	2.64
198	SLD 10	474	-391	5383	7.36	36.1	2.64
198	SLD 11	680	-1435	11126	50.64	54.13	9.65
198	SLD 12	680	-1435	11126	50.64	54.13	9.65
198	SLD 13	-399	-596	5081	16.42	0.65	4
198	SLD 14	-399	-596	5081	16.42	0.65	4
198	SLD 15	-337	-909	6804	29.41	6.06	6.1
198	SLD 16	-337	-909	6804	29.41	6.06	6.1
198	SLV 1	3977	-1153	14839	36.76	192.37	7.81
198	SLV 2	3977	-1153	14839	36.76	192.37	7.81
198	SLV 3	4125	-1884	18865	67.05	205.15	12.73
198	SLV 4	4125	-1884	18865	67.05	205.15	12.73
198	SLV 5	1654	76	4816	-12.79	82.43	-0.48
198	SLV 6	1654	76	4816	-12.79	82.43	-0.48
198	SLV 7	2151	-2361	18238	88.18	125.04	15.91
198	SLV 8	2151	-2361	18238	88.18	125.04	15.91
198	SLV 9	-187	398	252	-24.97	0.98	-2.68
198	SLV 10	-187	398	252	-24.97	0.98	-2.68
198	SLV 11	309	-2039	13674	76	43.6	13.71
198	SLV 12	309	-2039	13674	76	43.6	13.71
198	SLV 13	-2162	-79	-375	-3.84	-79.13	0.5
198	SLV 14	-2162	-79	-375	-3.84	-79.13	0.5
198	SLV 15	-2013	-810	3652	26.46	-66.34	5.41
198	SLV 16	-2013	-810	3652	26.46	-66.34	5.41
199	SLU 1	444	-4	6523	2.29	40.79	-0.04
199	SLU 2	404	-4	6387	2.29	38.51	-0.04
199	SLU 3	441	-4	6729	2.39	41.16	-0.05
199	SLU 4	417	-4	6648	2.39	39.8	-0.05
199	SLU 5	396	-4	6510	2.37	38.41	-0.05
199	SLU 6	433	-4	6852	2.47	41.07	-0.05
199	SLU 7	409	-4	6771	2.47	39.7	-0.05
199	SLU 8	429	-4	6769	2.44	40.6	-0.05
199	SLU 9	405	-4	6687	2.45	39.23	-0.05
199	SLU 10	509	-5	7571	2.67	46.69	-0.05
199	SLU 11	546	-5	7913	2.76	49.34	-0.06
199	SLU 12	522	-5	7832	2.76	47.97	-0.06
199	SLU 13	502	-5	7694	2.74	46.59	-0.06
199	SLU 14	538	-5	8036	2.84	49.25	-0.06
199	SLU 15	514	-5	7955	2.84	47.88	-0.06
199	SLU 16	534	-5	7952	2.81	48.78	-0.06
199	SLU 17	510	-5	7871	2.82	47.41	-0.06
199	SLU 18	594	-5	8214	2.82	52.48	-0.06
199	SLU 19	570	-5	8133	2.82	51.11	-0.06
199	SLU 20	587	-5	8337	2.9	52.38	-0.06
199	SLU 21	563	-5	8256	2.9	51.01	-0.06
199	SLU 22	538	-5	7576	2.58	48.04	-0.05
199	SLU 23	498	-5	7441	2.59	45.75	-0.05
199	SLU 24	535	-5	7783	2.68	48.41	-0.05
199	SLU 25	511	-5	7701	2.68	47.04	-0.05
199	SLU 26	490	-5	7564	2.66	45.66	-0.05
199	SLU 27	527	-5	7905	2.76	48.31	-0.06
199	SLU 28	503	-5	7824	2.76	46.94	-0.06
199	SLU 29	523	-5	7822	2.74	47.84	-0.06
199	SLU 30	499	-5	7741	2.74	46.47	-0.06
199	SLU 31	603	-5	8624	2.96	53.93	-0.06
199	SLU 32	640	-5	8966	3.05	56.59	-0.07
199	SLU 33	616	-5	8885	3.05	55.22	-0.07
199	SLU 34	596	-5	8747	3.03	53.84	-0.07
199	SLU 35	632	-5	9089	3.13	56.49	-0.07
199	SLU 36	608	-6	9008	3.13	55.12	-0.07
199	SLU 37	628	-5	9006	3.11	56.02	-0.07
199	SLU 38	604	-5	8925	3.11	54.65	-0.07
199	SLU 39	688	-5	9267	3.11	59.72	-0.07
199	SLU 40	664	-5	9186	3.11	58.35	-0.07
199	SLU 41	681	-6	9390	3.19	59.62	-0.07
199	SLU 42	657	-6	9309	3.19	58.25	-0.07
199	SLU 43	545	-5	8118	2.88	50.55	-0.05
199	SLU 44	505	-5	7983	2.88	48.27	-0.05
199	SLU 45	542	-5	8325	2.97	50.92	-0.06
199	SLU 46	517	-5	8243	2.98	49.55	-0.06
199	SLU 47	497	-5	8106	2.96	48.17	-0.06
199	SLU 48	534	-5	8448	3.05	50.82	-0.06
199	SLU 49	510	-6	8366	3.06	49.45	-0.06
199	SLU 50	530	-5	8364	3.03	50.35	-0.06
199	SLU 51	506	-6	8283	3.03	48.98	-0.06
199	SLU 52	610	-6	9167	3.25	56.45	-0.07
199	SLU 53	647	-6	9508	3.35	59.1	-0.07
199	SLU 54	623	-6	9427	3.35	57.73	-0.07
199	SLU 55	603	-6	9290	3.33	56.35	-0.07

Nodo	Cont.	Reazione a traslazione			Reazione a rotazione		
Ind.	N.br.	x	y	z	x	y	z
199	SLU 56	639	-6	9631	3.42	59	-0.07
199	SLU 57	615	-6	9550	3.43	57.63	-0.07
199	SLU 58	635	-6	9548	3.4	58.53	-0.07
199	SLU 59	611	-6	9467	3.41	57.16	-0.07
199	SLU 60	695	-6	9809	3.41	62.23	-0.07
199	SLU 61	671	-6	9728	3.41	60.86	-0.07
199	SLU 62	688	-6	9932	3.48	62.13	-0.07
199	SLU 63	664	-6	9851	3.49	60.76	-0.07
199	SLU 64	639	-6	9172	3.17	57.79	-0.06
199	SLU 65	599	-6	9036	3.17	55.51	-0.06
199	SLU 66	636	-6	9378	3.27	58.16	-0.06
199	SLU 67	611	-6	9297	3.27	56.79	-0.06
199	SLU 68	591	-6	9159	3.25	55.41	-0.06
199	SLU 69	628	-6	9501	3.34	58.06	-0.07
199	SLU 70	604	-6	9420	3.35	56.7	-0.07
199	SLU 71	624	-6	9418	3.32	57.59	-0.07
199	SLU 72	600	-6	9336	3.33	56.23	-0.07
199	SLU 73	704	-6	10220	3.54	63.69	-0.07
199	SLU 74	741	-6	10562	3.64	66.34	-0.08
199	SLU 75	717	-6	10481	3.64	64.97	-0.08
199	SLU 76	697	-6	10343	3.62	63.59	-0.08
199	SLU 77	733	-7	10685	3.71	66.24	-0.08
199	SLU 78	709	-7	10604	3.72	64.87	-0.08
199	SLU 79	729	-6	10602	3.69	65.77	-0.08
199	SLU 80	705	-7	10520	3.7	64.4	-0.08
199	SLU 81	789	-6	10863	3.7	69.47	-0.08
199	SLU 82	765	-7	10782	3.7	68.11	-0.08
199	SLU 83	782	-7	10986	3.77	69.38	-0.08
199	SLU 84	758	-7	10905	3.78	68.01	-0.08
199	SLE RA 1	471	-4	6824	2.37	42.86	-0.05
199	SLE RA 2	444	-4	6733	2.38	41.34	-0.05
199	SLE RA 3	469	-4	6961	2.44	43.11	-0.05
199	SLE RA 4	453	-4	6907	2.44	42.2	-0.05
199	SLE RA 5	439	-4	6815	2.43	41.28	-0.05
199	SLE RA 6	464	-4	7043	2.49	43.04	-0.05
199	SLE RA 7	447	-4	6989	2.49	42.13	-0.05
199	SLE RA 8	461	-4	6988	2.48	42.73	-0.05
199	SLE RA 9	445	-4	6933	2.48	41.82	-0.05
199	SLE RA 10	514	-5	7523	2.62	46.79	-0.05
199	SLE RA 11	539	-5	7750	2.69	48.56	-0.06
199	SLE RA 12	523	-5	7696	2.69	47.65	-0.06
199	SLE RA 13	509	-5	7604	2.68	46.73	-0.06
199	SLE RA 14	534	-5	7832	2.74	48.5	-0.06
199	SLE RA 15	518	-5	7778	2.74	47.58	-0.06
199	SLE RA 16	531	-5	7777	2.72	48.18	-0.06
199	SLE RA 17	515	-5	7723	2.73	47.27	-0.06
199	SLE RA 18	571	-5	7951	2.73	50.65	-0.06
199	SLE RA 19	555	-5	7897	2.73	49.74	-0.06
199	SLE RA 20	566	-5	8033	2.78	50.59	-0.06
199	SLE RA 21	550	-5	7979	2.78	49.67	-0.06
199	SLE FR 1	471	-4	6824	2.37	42.86	-0.05
199	SLE FR 2	465	-4	6806	2.37	42.56	-0.05
199	SLE FR 3	469	-4	6856	2.39	42.84	-0.05
199	SLE FR 4	495	-4	7144	2.48	44.9	-0.05
199	SLE FR 5	499	-4	7195	2.5	45.17	-0.05
199	SLE FR 6	521	-4	7387	2.55	46.76	-0.05
199	SLE QP 1	471	-4	6824	2.37	42.86	-0.05
199	SLE QP 2	501	-4	7162	2.48	45.2	-0.05
199	SLD 1	1843	8	8595	3.32	118.81	-0.01
199	SLD 2	1843	8	8595	3.32	118.81	-0.01
199	SLD 3	1645	1	9578	6.18	121.46	-0.4
199	SLD 4	1645	1	9578	6.18	121.46	-0.4
199	SLD 5	1204	11	6101	-1.62	63.27	0.56
199	SLD 6	1204	11	6101	-1.62	63.27	0.56
199	SLD 7	544	-14	9378	7.94	72.09	-0.75
199	SLD 8	544	-14	9378	7.94	72.09	-0.75
199	SLD 9	457	5	4946	-2.99	18.31	0.65
199	SLD 10	457	5	4946	-2.99	18.31	0.65
199	SLD 11	-202	-19	8223	6.58	27.13	-0.65
199	SLD 12	-202	-19	8223	6.58	27.13	-0.65
199	SLD 13	-644	-10	4746	-1.23	-31.06	0.3
199	SLD 14	-644	-10	4746	-1.23	-31.06	0.3
199	SLD 15	-841	-17	5729	1.64	-28.41	-0.09
199	SLD 16	-841	-17	5729	1.64	-28.41	-0.09
199	SLV 1	3556	26	10454	4.42	212.3	0.06
199	SLV 2	3556	26	10454	4.42	212.3	0.06
199	SLV 3	3094	9	12755	11.35	218.73	-0.88
199	SLV 4	3094	9	12755	11.35	218.73	-0.88
199	SLV 5	2118	31	4659	-7.45	85.58	1.42
199	SLV 6	2118	31	4659	-7.45	85.58	1.42
199	SLV 7	578	-27	12330	15.65	107.01	-1.73
199	SLV 8	578	-27	12330	15.65	107.01	-1.73
199	SLV 9	423	18	1994	-10.7	-16.61	1.63
199	SLV 10	423	18	1994	-10.7	-16.61	1.63
199	SLV 11	-1116	-40	9664	12.41	4.82	-1.51
199	SLV 12	-1116	-40	9664	12.41	4.82	-1.51
199	SLV 13	-2092	-17	1569	-6.4	-128.33	0.78
199	SLV 14	-2092	-17	1569	-6.4	-128.33	0.78
199	SLV 15	-2554	-35	3870	0.53	-121.91	-0.16
199	SLV 16	-2554	-35	3870	0.53	-121.91	-0.16
200	SLU 1	522	2	6568	0.34	30.73	-0.03

Nodo	Cont.	Reazione a traslazione			Reazione a rotazione		
Ind.	N.br.	x	y	z	x	y	z
200	SLU 2	474	1	6426	0.37	28.25	-0.03
200	SLU 3	517	2	6779	0.38	30.58	-0.03
200	SLU 4	488	1	6694	0.4	29.09	-0.03
200	SLU 5	464	1	6554	0.42	27.76	-0.03
200	SLU 6	507	2	6907	0.42	30.09	-0.04
200	SLU 7	478	1	6822	0.44	28.6	-0.04
200	SLU 8	502	1	6824	0.43	29.76	-0.04
200	SLU 9	473	1	6739	0.45	28.27	-0.04
200	SLU 10	592	2	7632	0.43	34.87	-0.04
200	SLU 11	635	2	7985	0.44	37.2	-0.04
200	SLU 12	606	2	7899	0.46	35.71	-0.04
200	SLU 13	581	2	7760	0.48	34.39	-0.04
200	SLU 14	625	2	8113	0.49	36.72	-0.04
200	SLU 15	596	2	8028	0.5	35.22	-0.04
200	SLU 16	620	2	8030	0.49	36.39	-0.04
200	SLU 17	591	2	7945	0.51	34.89	-0.04
200	SLU 18	690	2	8290	0.43	40.2	-0.04
200	SLU 19	661	2	8205	0.45	38.7	-0.04
200	SLU 20	680	2	8419	0.47	39.71	-0.04
200	SLU 21	651	2	8333	0.49	38.22	-0.04
200	SLU 22	627	2	7643	0.34	36.6	-0.03
200	SLU 23	578	2	7500	0.37	34.11	-0.03
200	SLU 24	622	2	7854	0.38	36.44	-0.04
200	SLU 25	593	2	7768	0.4	34.95	-0.04
200	SLU 26	568	2	7629	0.42	33.62	-0.04
200	SLU 27	612	2	7982	0.43	35.96	-0.04
200	SLU 28	583	2	7896	0.45	34.46	-0.04
200	SLU 29	607	2	7899	0.43	35.62	-0.04
200	SLU 30	578	2	7813	0.45	34.13	-0.04
200	SLU 31	696	2	8706	0.44	40.73	-0.04
200	SLU 32	739	2	9059	0.44	43.07	-0.04
200	SLU 33	710	2	8974	0.46	41.57	-0.04
200	SLU 34	686	2	8834	0.48	40.25	-0.04
200	SLU 35	729	2	9187	0.49	42.58	-0.04
200	SLU 36	700	2	9102	0.51	41.09	-0.04
200	SLU 37	724	2	9104	0.5	42.25	-0.04
200	SLU 38	695	2	9019	0.52	40.76	-0.04
200	SLU 39	795	2	9365	0.43	46.06	-0.04
200	SLU 40	766	2	9280	0.45	44.57	-0.04
200	SLU 41	785	2	9493	0.48	45.57	-0.04
200	SLU 42	756	2	9408	0.5	44.08	-0.04
200	SLU 43	643	2	8170	0.44	37.94	-0.04
200	SLU 44	595	2	8028	0.47	35.46	-0.04
200	SLU 45	638	2	8381	0.48	37.79	-0.04
200	SLU 46	609	2	8296	0.5	36.3	-0.04
200	SLU 47	585	2	8156	0.52	34.97	-0.04
200	SLU 48	628	2	8509	0.52	37.3	-0.04
200	SLU 49	599	2	8424	0.54	35.81	-0.04
200	SLU 50	623	2	8426	0.53	36.97	-0.04
200	SLU 51	594	2	8341	0.55	35.48	-0.05
200	SLU 52	712	2	9234	0.53	42.08	-0.05
200	SLU 53	756	2	9587	0.54	44.41	-0.05
200	SLU 54	727	2	9501	0.56	42.92	-0.05
200	SLU 55	702	2	9362	0.58	41.6	-0.05
200	SLU 56	746	2	9715	0.59	43.93	-0.05
200	SLU 57	717	2	9630	0.6	42.43	-0.05
200	SLU 58	741	2	9632	0.59	43.6	-0.05
200	SLU 59	712	2	9547	0.61	42.1	-0.05
200	SLU 60	811	2	9892	0.53	47.41	-0.05
200	SLU 61	782	2	9807	0.55	45.91	-0.05
200	SLU 62	801	2	10021	0.57	46.92	-0.05
200	SLU 63	772	2	9935	0.59	45.43	-0.05
200	SLU 64	748	2	9245	0.44	43.81	-0.04
200	SLU 65	699	2	9102	0.47	41.32	-0.04
200	SLU 66	743	2	9456	0.48	43.65	-0.04
200	SLU 67	714	2	9370	0.5	42.16	-0.05
200	SLU 68	689	2	9231	0.52	40.83	-0.05
200	SLU 69	733	2	9584	0.53	43.17	-0.05
200	SLU 70	704	2	9498	0.55	41.67	-0.05
200	SLU 71	728	2	9501	0.53	42.83	-0.05
200	SLU 72	699	2	9415	0.55	41.34	-0.05
200	SLU 73	817	2	10308	0.54	47.94	-0.05
200	SLU 74	860	2	10661	0.54	50.28	-0.05
200	SLU 75	831	2	10576	0.56	48.78	-0.05
200	SLU 76	807	2	10436	0.58	47.46	-0.05
200	SLU 77	850	2	10789	0.59	49.79	-0.05
200	SLU 78	821	2	10704	0.61	48.3	-0.05
200	SLU 79	845	2	10706	0.6	49.46	-0.05
200	SLU 80	816	2	10621	0.62	47.97	-0.05
200	SLU 81	916	3	10967	0.53	53.27	-0.05
200	SLU 82	887	2	10882	0.55	51.78	-0.05
200	SLU 83	906	3	11095	0.58	52.78	-0.05
200	SLU 84	877	2	11010	0.6	51.29	-0.05
200	SLE RA 1	552	2	6875	0.34	32.41	-0.03
200	SLE RA 2	520	2	6780	0.36	30.75	-0.03
200	SLE RA 3	549	2	7016	0.37	32.31	-0.03
200	SLE RA 4	530	2	6959	0.38	31.31	-0.03
200	SLE RA 5	513	1	6866	0.39	30.43	-0.03
200	SLE RA 6	542	2	7101	0.4	31.98	-0.04
200	SLE RA 7	523	2	7044	0.41	30.99	-0.04
200	SLE RA 8	539	2	7046	0.4	31.76	-0.04

Nodo	Cont.	Reazione a traslazione			Reazione a rotazione		
Ind.	N.br.	x	y	z	x	y	z
200	SLE RA 9	519	2	6989	0.41	30.77	-0.04
200	SLE RA 10	598	2	7584	0.4	35.17	-0.04
200	SLE RA 11	627	2	7819	0.41	36.72	-0.04
200	SLE RA 12	608	2	7763	0.42	35.73	-0.04
200	SLE RA 13	592	2	7669	0.43	34.84	-0.04
200	SLE RA 14	621	2	7905	0.44	36.4	-0.04
200	SLE RA 15	601	2	7848	0.45	35.4	-0.04
200	SLE RA 16	617	2	7850	0.44	36.18	-0.04
200	SLE RA 17	598	2	7793	0.46	35.18	-0.04
200	SLE RA 18	664	2	8023	0.4	38.72	-0.04
200	SLE RA 19	645	2	7966	0.41	37.72	-0.04
200	SLE RA 20	658	2	8109	0.43	38.39	-0.04
200	SLE RA 21	638	2	8052	0.44	37.4	-0.04
200	SLE FR 1	552	2	6875	0.34	32.41	-0.03
200	SLE FR 2	546	2	6856	0.34	32.08	-0.03
200	SLE FR 3	550	2	6909	0.35	32.28	-0.03
200	SLE FR 4	579	2	7201	0.36	33.97	-0.03
200	SLE FR 5	583	2	7254	0.37	34.17	-0.03
200	SLE FR 6	608	2	7449	0.37	35.56	-0.03
200	SLE QP 1	552	2	6875	0.34	32.41	-0.03
200	SLE QP 2	586	2	7220	0.36	34.3	-0.03
200	SLD 1	2225	14	8283	0.76	124.49	-0.13
200	SLD 2	2225	14	8283	0.76	124.49	-0.13
200	SLD 3	2088	1	9126	4	119.43	-0.29
200	SLD 4	2088	1	9126	4	119.43	-0.29
200	SLD 5	1285	26	6260	-4.45	69.04	0.18
200	SLD 6	1285	26	6260	-4.45	69.04	0.18
200	SLD 7	829	-19	9070	6.37	52.16	-0.35
200	SLD 8	829	-19	9070	6.37	52.16	-0.35
200	SLD 9	343	22	5369	-5.66	16.44	0.28
200	SLD 10	343	22	5369	-5.66	16.44	0.28
200	SLD 11	-114	-23	8179	5.16	-0.43	-0.24
200	SLD 12	-114	-23	8179	5.16	-0.43	-0.24
200	SLD 13	-916	2	5313	-3.29	-50.82	0.22
200	SLD 14	-916	2	5313	-3.29	-50.82	0.22
200	SLD 15	-1053	-11	6156	-0.04	-55.88	0.06
200	SLD 16	-1053	-11	6156	-0.04	-55.88	0.06
200	SLV 1	4314	33	9672	1.28	239.42	-0.26
200	SLV 2	4314	33	9672	1.28	239.42	-0.26
200	SLV 3	3993	0	11646	9.21	227.5	-0.64
200	SLV 4	3993	0	11646	9.21	227.5	-0.64
200	SLV 5	2191	61	4961	-11.4	113.92	0.47
200	SLV 6	2191	61	4961	-11.4	113.92	0.47
200	SLV 7	1122	-49	11542	15.04	74.18	-0.78
200	SLV 8	1122	-49	11542	15.04	74.18	-0.78
200	SLV 9	50	52	2897	-14.33	-5.58	0.72
200	SLV 10	50	52	2897	-14.33	-5.58	0.72
200	SLV 11	-1019	-58	9478	12.11	-45.32	-0.54
200	SLV 12	-1019	-58	9478	12.11	-45.32	-0.54
200	SLV 13	-2822	3	2793	-8.49	-158.9	0.57
200	SLV 14	-2822	3	2793	-8.49	-158.9	0.57
200	SLV 15	-3142	-30	4767	-0.56	-170.82	0.19
200	SLV 16	-3142	-30	4767	-0.56	-170.82	0.19
201	SLU 1	363	1	6642	-0.15	18.46	-0.01
201	SLU 2	315	1	6490	-0.13	16.17	-0.01
201	SLU 3	352	1	6858	-0.12	17.93	-0.01
201	SLU 4	323	1	6766	-0.11	16.56	-0.01
201	SLU 5	300	1	6623	-0.08	15.48	-0.01
201	SLU 6	338	1	6991	-0.08	17.24	-0.01
201	SLU 7	309	1	6900	-0.06	15.87	-0.01
201	SLU 8	335	1	6908	-0.06	17.07	-0.01
201	SLU 9	306	1	6817	-0.05	15.7	-0.01
201	SLU 10	400	1	7722	-0.14	20.37	-0.01
201	SLU 11	437	1	8090	-0.14	22.13	-0.01
201	SLU 12	408	1	7999	-0.12	20.75	-0.01
201	SLU 13	385	1	7855	-0.1	19.68	-0.01
201	SLU 14	423	1	8223	-0.09	21.43	-0.01
201	SLU 15	394	1	8132	-0.08	20.06	-0.01
201	SLU 16	420	1	8140	-0.08	21.27	-0.01
201	SLU 17	391	1	8049	-0.06	19.9	-0.01
201	SLU 18	485	1	8402	-0.17	24.45	-0.01
201	SLU 19	456	1	8311	-0.15	23.08	-0.01
201	SLU 20	471	1	8535	-0.13	23.76	-0.01
201	SLU 21	442	1	8444	-0.11	22.39	-0.01
201	SLU 22	439	1	7742	-0.22	22.16	-0.01
201	SLU 23	390	1	7590	-0.2	19.87	-0.01
201	SLU 24	428	1	7958	-0.19	21.63	-0.01
201	SLU 25	398	1	7866	-0.18	20.26	-0.01
201	SLU 26	376	1	7723	-0.15	19.18	-0.01
201	SLU 27	413	1	8091	-0.15	20.94	-0.01
201	SLU 28	384	1	7999	-0.13	19.56	-0.01
201	SLU 29	410	1	8008	-0.13	20.77	-0.01
201	SLU 30	381	1	7917	-0.12	19.4	-0.01
201	SLU 31	475	1	8822	-0.21	24.07	-0.01
201	SLU 32	513	2	9190	-0.21	25.82	-0.01
201	SLU 33	483	2	9099	-0.19	24.45	-0.01
201	SLU 34	461	1	8955	-0.17	23.37	-0.01
201	SLU 35	499	2	9323	-0.16	25.13	-0.01
201	SLU 36	469	1	9232	-0.15	23.76	-0.01
201	SLU 37	496	2	9240	-0.15	24.97	-0.01
201	SLU 38	466	1	9149	-0.13	23.6	-0.01

Nodo	Cont.	Reazione a traslazione			Reazione a rotazione		
Ind.	N.br.	x	y	z	x	y	z
201	SLU 39	560	2	9502	-0.24	28.15	-0.01
201	SLU 40	531	2	9411	-0.23	26.78	-0.01
201	SLU 41	546	2	9635	-0.2	27.46	-0.01
201	SLU 42	517	2	9544	-0.18	26.09	-0.01
201	SLU 43	447	1	8258	-0.17	22.73	-0.01
201	SLU 44	398	1	8105	-0.15	20.44	-0.01
201	SLU 45	435	1	8473	-0.14	22.2	-0.01
201	SLU 46	406	1	8382	-0.13	20.83	-0.01
201	SLU 47	383	1	8238	-0.1	19.75	-0.01
201	SLU 48	421	1	8606	-0.1	21.51	-0.01
201	SLU 49	392	1	8515	-0.09	20.14	-0.01
201	SLU 50	418	1	8524	-0.08	21.34	-0.01
201	SLU 51	389	1	8432	-0.07	19.97	-0.01
201	SLU 52	483	1	9337	-0.16	24.64	-0.01
201	SLU 53	520	2	9706	-0.16	26.4	-0.01
201	SLU 54	491	2	9614	-0.14	25.02	-0.01
201	SLU 55	469	1	9471	-0.12	23.95	-0.01
201	SLU 56	506	2	9839	-0.11	25.7	-0.01
201	SLU 57	477	1	9747	-0.1	24.33	-0.01
201	SLU 58	503	2	9756	-0.1	25.54	-0.01
201	SLU 59	474	1	9665	-0.08	24.17	-0.01
201	SLU 60	568	2	10018	-0.19	28.72	-0.01
201	SLU 61	539	2	9926	-0.18	27.35	-0.01
201	SLU 62	554	2	10151	-0.15	28.03	-0.01
201	SLU 63	525	2	10060	-0.13	26.66	-0.01
201	SLU 64	522	2	9358	-0.24	26.43	-0.01
201	SLU 65	473	2	9205	-0.22	24.14	-0.01
201	SLU 66	511	2	9573	-0.22	25.9	-0.01
201	SLU 67	481	2	9482	-0.2	24.53	-0.01
201	SLU 68	459	1	9338	-0.17	23.45	-0.01
201	SLU 69	497	2	9706	-0.17	25.21	-0.01
201	SLU 70	467	2	9615	-0.16	23.83	-0.01
201	SLU 71	494	2	9624	-0.15	25.04	-0.01
201	SLU 72	464	1	9532	-0.14	23.67	-0.01
201	SLU 73	558	2	10437	-0.23	28.34	-0.01
201	SLU 74	596	2	10805	-0.23	30.09	-0.01
201	SLU 75	567	2	10714	-0.21	28.72	-0.01
201	SLU 76	544	2	10570	-0.19	27.64	-0.01
201	SLU 77	582	2	10939	-0.18	29.4	-0.01
201	SLU 78	552	2	10847	-0.17	28.03	-0.01
201	SLU 79	579	2	10856	-0.17	29.24	-0.01
201	SLU 80	549	2	10764	-0.15	27.87	-0.01
201	SLU 81	644	2	11118	-0.26	32.42	-0.01
201	SLU 82	614	2	11026	-0.25	31.05	-0.01
201	SLU 83	629	2	11251	-0.22	31.73	-0.01
201	SLU 84	600	2	11159	-0.2	30.36	-0.01
201	SLE RA 1	385	1	6956	-0.17	19.52	-0.01
201	SLE RA 2	352	1	6855	-0.15	17.99	-0.01
201	SLE RA 3	377	1	7100	-0.15	19.16	-0.01
201	SLE RA 4	358	1	7039	-0.14	18.25	-0.01
201	SLE RA 5	343	1	6944	-0.12	17.53	-0.01
201	SLE RA 6	368	1	7189	-0.12	18.7	-0.01
201	SLE RA 7	348	1	7128	-0.11	17.79	-0.01
201	SLE RA 8	366	1	7134	-0.11	18.59	-0.01
201	SLE RA 9	346	1	7073	-0.1	17.68	-0.01
201	SLE RA 10	409	1	7676	-0.16	20.79	-0.01
201	SLE RA 11	434	1	7922	-0.16	21.96	-0.01
201	SLE RA 12	415	1	7861	-0.15	21.05	-0.01
201	SLE RA 13	400	1	7765	-0.13	20.33	-0.01
201	SLE RA 14	425	1	8010	-0.13	21.5	-0.01
201	SLE RA 15	405	1	7949	-0.12	20.58	-0.01
201	SLE RA 16	423	1	7955	-0.12	21.39	-0.01
201	SLE RA 17	403	1	7894	-0.11	20.47	-0.01
201	SLE RA 18	466	1	8130	-0.18	23.51	-0.01
201	SLE RA 19	447	1	8069	-0.17	22.6	-0.01
201	SLE RA 20	457	1	8219	-0.15	23.05	-0.01
201	SLE RA 21	437	1	8158	-0.14	22.14	-0.01
201	SLE FR 1	385	1	6956	-0.17	19.52	-0.01
201	SLE FR 2	378	1	6936	-0.17	19.21	-0.01
201	SLE FR 3	381	1	6992	-0.16	19.33	-0.01
201	SLE FR 4	403	1	7288	-0.17	20.41	-0.01
201	SLE FR 5	406	1	7344	-0.16	20.53	-0.01
201	SLE FR 6	426	1	7543	-0.18	21.51	-0.01
201	SLE QP 1	385	1	6956	-0.17	19.52	-0.01
201	SLE QP 2	409	1	7308	-0.17	20.71	-0.01
201	SLD 1	2101	5	8059	0.1	105.06	0.02
201	SLD 2	2101	5	8059	0.1	105.06	0.02
201	SLD 3	1983	-9	8787	2.2	100.28	-0.18
201	SLD 4	1983	-9	8787	2.2	100.28	-0.18
201	SLD 5	1095	24	6431	-3.27	53.26	0.29
201	SLD 6	1095	24	6431	-3.27	53.26	0.29
201	SLD 7	704	-23	8855	3.72	37.34	-0.35
201	SLD 8	704	-23	8855	3.72	37.34	-0.35
201	SLD 9	115	26	5762	-4.07	4.09	0.33
201	SLD 10	115	26	5762	-4.07	4.09	0.33
201	SLD 11	-276	-21	8186	2.92	-11.83	-0.31
201	SLD 12	-276	-21	8186	2.92	-11.83	-0.31
201	SLD 13	-1165	12	5830	-2.55	-58.85	0.16
201	SLD 14	-1165	12	5830	-2.55	-58.85	0.16
201	SLD 15	-1282	-2	6558	-0.45	-63.63	-0.03
201	SLD 16	-1282	-2	6558	-0.45	-63.63	-0.03

Nodo	Cont.	Reazione a traslazione			Reazione a rotazione		
Ind.	N.br.	x	y	z	x	y	z
201	SLV 1	4256	9	9048	0.45	212.53	0.05
201	SLV 2	4256	9	9048	0.45	212.53	0.05
201	SLV 3	3981	-25	10754	5.55	201.31	-0.41
201	SLV 4	3981	-25	10754	5.55	201.31	-0.41
201	SLV 5	1980	55	5244	-7.72	95.28	0.71
201	SLV 6	1980	55	5244	-7.72	95.28	0.71
201	SLV 7	1064	-58	10928	9.28	57.87	-0.83
201	SLV 8	1064	-58	10928	9.28	57.87	-0.83
201	SLV 9	-246	61	3688	-9.63	-16.44	0.81
201	SLV 10	-246	61	3688	-9.63	-16.44	0.81
201	SLV 11	-1161	-53	9373	7.37	-53.86	-0.73
201	SLV 12	-1161	-53	9373	7.37	-53.86	-0.73
201	SLV 13	-3163	27	3863	-5.9	-159.88	0.4
201	SLV 14	-3163	27	3863	-5.9	-159.88	0.4
201	SLV 15	-3437	-7	5568	-0.8	-171.1	-0.07
201	SLV 16	-3437	-7	5568	-0.8	-171.1	-0.07
202	SLU 1	221	1	6790	-0.17	9.19	0
202	SLU 2	172	1	6624	-0.19	7.29	0
202	SLU 3	204	1	7013	-0.15	8.5	0
202	SLU 4	175	1	6914	-0.16	7.36	0
202	SLU 5	155	1	6764	-0.15	6.55	0
202	SLU 6	186	1	7153	-0.11	7.76	0
202	SLU 7	158	1	7054	-0.11	6.62	0
202	SLU 8	185	1	7069	-0.09	7.71	0
202	SLU 9	156	0	6970	-0.1	6.57	0
202	SLU 10	227	1	7899	-0.2	9.54	0
202	SLU 11	259	1	8288	-0.16	10.75	0
202	SLU 12	230	1	8189	-0.17	9.61	0
202	SLU 13	210	1	8039	-0.16	8.8	0
202	SLU 14	242	1	8428	-0.12	10.01	0
202	SLU 15	213	1	8328	-0.13	8.87	0
202	SLU 16	240	1	8344	-0.1	9.96	0
202	SLU 17	211	1	8245	-0.11	8.82	0
202	SLU 18	299	1	8611	-0.19	12.4	0
202	SLU 19	270	1	8511	-0.2	11.26	0
202	SLU 20	282	1	8751	-0.15	11.66	0
202	SLU 21	253	1	8651	-0.16	10.52	0
202	SLU 22	269	1	7930	-0.24	11.16	0
202	SLU 23	221	1	7764	-0.26	9.25	0
202	SLU 24	252	1	8153	-0.22	10.47	0
202	SLU 25	223	1	8054	-0.23	9.33	0
202	SLU 26	203	1	7904	-0.21	8.51	0
202	SLU 27	235	1	8293	-0.17	9.73	0
202	SLU 28	206	1	8193	-0.18	8.59	0
202	SLU 29	234	1	8209	-0.16	9.67	0
202	SLU 30	205	1	8110	-0.16	8.53	0
202	SLU 31	276	1	9039	-0.27	11.5	0
202	SLU 32	307	1	9428	-0.23	12.72	0
202	SLU 33	278	1	9328	-0.24	11.58	0
202	SLU 34	258	1	9178	-0.23	10.76	0
202	SLU 35	290	1	9567	-0.19	11.98	0
202	SLU 36	261	1	9468	-0.2	10.83	0
202	SLU 37	289	1	9484	-0.17	11.92	0
202	SLU 38	260	1	9384	-0.18	10.78	0
202	SLU 39	347	1	9751	-0.26	14.37	0
202	SLU 40	319	1	9651	-0.27	13.23	0
202	SLU 41	330	1	9890	-0.22	13.63	0
202	SLU 42	301	1	9791	-0.23	12.48	0
202	SLU 43	270	1	8436	-0.2	11.28	0
202	SLU 44	222	1	8270	-0.22	9.37	0
202	SLU 45	254	1	8660	-0.18	10.59	0
202	SLU 46	225	1	8560	-0.19	9.45	0
202	SLU 47	204	1	8410	-0.17	8.63	0
202	SLU 48	236	1	8799	-0.13	9.85	0
202	SLU 49	207	1	8700	-0.14	8.71	0
202	SLU 50	235	1	8716	-0.12	9.79	0
202	SLU 51	206	1	8616	-0.13	8.65	0
202	SLU 52	277	1	9545	-0.23	11.62	0
202	SLU 53	309	1	9934	-0.19	12.84	0
202	SLU 54	280	1	9835	-0.2	11.7	0
202	SLU 55	259	1	9685	-0.19	10.88	0
202	SLU 56	291	1	10074	-0.15	12.1	-0.01
202	SLU 57	262	1	9975	-0.16	10.95	-0.01
202	SLU 58	290	1	9990	-0.13	12.04	-0.01
202	SLU 59	261	1	9891	-0.14	10.9	-0.01
202	SLU 60	349	1	10257	-0.22	14.49	0
202	SLU 61	320	1	10158	-0.23	13.35	0
202	SLU 62	331	1	10397	-0.18	13.75	-0.01
202	SLU 63	302	1	10297	-0.19	12.61	0
202	SLU 64	318	1	9576	-0.27	13.24	0
202	SLU 65	270	1	9410	-0.29	11.34	0
202	SLU 66	302	1	9799	-0.25	12.55	0
202	SLU 67	273	1	9700	-0.26	11.41	0
202	SLU 68	253	1	9550	-0.24	10.59	0
202	SLU 69	284	1	9939	-0.2	11.81	0
202	SLU 70	255	1	9840	-0.21	10.67	0
202	SLU 71	283	1	9855	-0.19	11.76	0
202	SLU 72	254	1	9756	-0.19	10.62	0
202	SLU 73	325	1	10685	-0.3	13.59	0
202	SLU 74	357	1	11074	-0.26	14.8	0
202	SLU 75	328	1	10975	-0.27	13.66	0

Nodo	Cont.	Reazione a traslazione			Reazione a rotazione		
Ind.	N.br.	x	y	z	x	y	z
202	SLU 76	308	1	10824	-0.26	12.84	0
202	SLU 77	339	1	11214	-0.22	14.06	-0.01
202	SLU 78	311	1	11114	-0.23	12.92	-0.01
202	SLU 79	338	1	11130	-0.2	14.01	-0.01
202	SLU 80	309	1	11030	-0.21	12.86	-0.01
202	SLU 81	397	1	11397	-0.29	16.45	0
202	SLU 82	368	1	11297	-0.3	15.31	0
202	SLU 83	379	1	11536	-0.25	15.71	-0.01
202	SLU 84	351	1	11437	-0.26	14.57	0
202	SLE RA 1	234	1	7116	-0.19	9.75	0
202	SLE RA 2	202	1	7005	-0.2	8.48	0
202	SLE RA 3	223	1	7265	-0.18	9.29	0
202	SLE RA 4	204	1	7198	-0.18	8.53	0
202	SLE RA 5	191	1	7098	-0.17	7.99	0
202	SLE RA 6	212	1	7358	-0.15	8.8	0
202	SLE RA 7	192	1	7291	-0.15	8.04	0
202	SLE RA 8	211	1	7302	-0.14	8.76	0
202	SLE RA 9	192	1	7236	-0.14	8	0
202	SLE RA 10	239	1	7855	-0.21	9.98	0
202	SLE RA 11	260	1	8114	-0.19	10.79	0
202	SLE RA 12	241	1	8048	-0.19	10.03	0
202	SLE RA 13	227	1	7948	-0.18	9.49	0
202	SLE RA 14	248	1	8207	-0.16	10.3	0
202	SLE RA 15	229	1	8141	-0.16	9.54	0
202	SLE RA 16	248	1	8152	-0.15	10.26	0
202	SLE RA 17	228	1	8085	-0.15	9.5	0
202	SLE RA 18	287	1	8329	-0.21	11.89	0
202	SLE RA 19	267	1	8263	-0.21	11.13	0
202	SLE RA 20	275	1	8423	-0.18	11.4	0
202	SLE RA 21	256	1	8356	-0.18	10.64	0
202	SLE FR 1	234	1	7116	-0.19	9.75	0
202	SLE FR 2	228	1	7093	-0.2	9.5	0
202	SLE FR 3	230	1	7153	-0.18	9.56	0
202	SLE FR 4	244	1	7458	-0.2	10.14	0
202	SLE FR 5	245	1	7517	-0.19	10.2	0
202	SLE FR 6	261	1	7722	-0.2	10.82	0
202	SLE QP 1	234	1	7116	-0.19	9.75	0
202	SLE QP 2	250	1	7480	-0.2	10.4	0
202	SLD 1	1966	1	7986	-0.85	82.87	0.04
202	SLD 2	1966	1	7986	-0.85	82.87	0.04
202	SLD 3	1867	-3	8635	2.63	79.01	-0.12
202	SLD 4	1867	-3	8635	2.63	79.01	-0.12
202	SLD 5	915	6	6648	-5.67	37.99	0.25
202	SLD 6	915	6	6648	-5.67	37.99	0.25
202	SLD 7	584	-6	8810	5.93	25.12	-0.28
202	SLD 8	584	-6	8810	5.93	25.12	-0.28
202	SLD 9	-84	7	6149	-6.32	-4.33	0.27
202	SLD 10	-84	7	6149	-6.32	-4.33	0.27
202	SLD 11	-415	-5	8312	5.28	-17.2	-0.25
202	SLD 12	-415	-5	8312	5.28	-17.2	-0.25
202	SLD 13	-1367	4	6324	-3.02	-58.22	0.11
202	SLD 14	-1367	4	6324	-3.02	-58.22	0.11
202	SLD 15	-1466	1	6973	0.46	-62.08	-0.05
202	SLD 16	-1466	1	6973	0.46	-62.08	-0.05
202	SLV 1	4153	1	8661	-1.76	175.23	0.1
202	SLV 2	4153	1	8661	-1.76	175.23	0.1
202	SLV 3	3920	-8	10184	6.57	166.15	-0.28
202	SLV 4	3920	-8	10184	6.57	166.15	-0.28
202	SLV 5	1775	14	5524	-13.31	73.61	0.6
202	SLV 6	1775	14	5524	-13.31	73.61	0.6
202	SLV 7	997	-15	10601	14.47	43.36	-0.66
202	SLV 8	997	-15	10601	14.47	43.36	-0.66
202	SLV 9	-497	17	4358	-14.87	-22.57	0.66
202	SLV 10	-497	17	4358	-14.87	-22.57	0.66
202	SLV 11	-1274	-13	9435	12.91	-52.82	-0.61
202	SLV 12	-1274	-13	9435	12.91	-52.82	-0.61
202	SLV 13	-3420	9	4775	-6.97	-145.36	0.28
202	SLV 14	-3420	9	4775	-6.97	-145.36	0.28
202	SLV 15	-3653	0	6298	1.37	-154.43	-0.1
202	SLV 16	-3653	0	6298	1.37	-154.43	-0.1
203	SLU 1	118	0	6971	-0.01	1.79	-0.01
203	SLU 2	71	0	6789	-0.1	0.01	-0.01
203	SLU 3	99	0	7204	0.02	0.87	-0.01
203	SLU 4	70	0	7095	-0.04	-0.2	-0.01
203	SLU 5	51	0	6937	-0.06	-0.88	-0.01
203	SLU 6	79	0	7351	0.06	-0.02	-0.01
203	SLU 7	51	0	7242	0	-1.09	-0.01
203	SLU 8	79	0	7265	0.07	0.02	-0.01
203	SLU 9	51	0	7156	0.01	-1.05	-0.01
203	SLU 10	105	0	8110	-0.09	0.71	-0.01
203	SLU 11	133	0	8524	0.03	1.57	-0.01
203	SLU 12	104	0	8415	-0.02	0.5	-0.01
203	SLU 13	85	0	8257	-0.05	-0.17	-0.01
203	SLU 14	113	0	8671	0.07	0.69	-0.01
203	SLU 15	85	0	8562	0.02	-0.38	-0.01
203	SLU 16	113	0	8586	0.09	0.73	-0.01
203	SLU 17	85	0	8477	0.03	-0.34	-0.01
203	SLU 18	167	0	8857	0.01	2.8	-0.01
203	SLU 19	138	0	8748	-0.04	1.73	-0.01
203	SLU 20	147	0	9004	0.05	1.91	-0.01
203	SLU 21	119	0	8895	0	0.84	-0.01

Nodo	Cont.	Reazione a traslazione			Reazione a rotazione		
Ind.	N.br.	x	y	z	x	y	z
203	SLU 22	148	1	8153	-0.04	2.38	-0.01
203	SLU 23	100	0	7972	-0.14	0.59	-0.01
203	SLU 24	128	1	8386	-0.02	1.45	-0.01
203	SLU 25	100	0	8277	-0.07	0.38	-0.01
203	SLU 26	81	0	8119	-0.1	-0.29	-0.01
203	SLU 27	109	0	8533	0.02	0.57	-0.01
203	SLU 28	80	0	8424	-0.03	-0.5	-0.01
203	SLU 29	109	0	8448	0.04	0.61	-0.01
203	SLU 30	80	0	8339	-0.02	-0.46	-0.01
203	SLU 31	135	0	9292	-0.12	1.3	-0.01
203	SLU 32	162	1	9706	0	2.16	-0.01
203	SLU 33	134	1	9598	-0.06	1.09	-0.01
203	SLU 34	115	0	9439	-0.08	0.41	-0.01
203	SLU 35	143	1	9854	0.04	1.27	-0.01
203	SLU 36	115	0	9745	-0.02	0.2	-0.01
203	SLU 37	143	0	9768	0.05	1.31	-0.01
203	SLU 38	115	0	9659	0	0.24	-0.01
203	SLU 39	197	1	10040	-0.02	3.38	-0.01
203	SLU 40	168	1	9931	-0.08	2.31	-0.01
203	SLU 41	177	1	10187	0.02	2.5	-0.01
203	SLU 42	149	1	10078	-0.04	1.43	-0.01
203	SLU 43	143	1	8657	0	2.13	-0.01
203	SLU 44	96	0	8475	-0.1	0.34	-0.01
203	SLU 45	124	0	8890	0.02	1.21	-0.01
203	SLU 46	95	0	8781	-0.03	0.13	-0.01
203	SLU 47	76	0	8622	-0.06	-0.54	-0.01
203	SLU 48	104	0	9037	0.06	0.32	-0.01
203	SLU 49	76	0	8928	0.01	-0.75	-0.01
203	SLU 50	104	0	8951	0.08	0.36	-0.01
203	SLU 51	76	0	8842	0.02	-0.71	-0.01
203	SLU 52	130	0	9796	-0.08	1.05	-0.01
203	SLU 53	158	1	10210	0.04	1.91	-0.01
203	SLU 54	130	0	10101	-0.02	0.84	-0.01
203	SLU 55	111	0	9943	-0.04	0.16	-0.01
203	SLU 56	138	0	10357	0.08	1.03	-0.01
203	SLU 57	110	0	10248	0.02	-0.05	-0.01
203	SLU 58	139	0	10272	0.09	1.06	-0.01
203	SLU 59	110	0	10163	0.04	-0.01	-0.01
203	SLU 60	192	1	10543	0.02	3.14	-0.01
203	SLU 61	164	1	10434	-0.04	2.07	-0.01
203	SLU 62	173	1	10690	0.06	2.25	-0.01
203	SLU 63	144	0	10581	0	1.18	-0.01
203	SLU 64	173	1	9839	-0.03	2.72	-0.01
203	SLU 65	126	1	9658	-0.13	0.93	-0.01
203	SLU 66	153	1	10072	-0.01	1.79	-0.01
203	SLU 67	125	1	9963	-0.06	0.72	-0.01
203	SLU 68	106	0	9805	-0.09	0.04	-0.01
203	SLU 69	134	1	10219	0.03	0.91	-0.01
203	SLU 70	106	0	10110	-0.03	-0.17	-0.01
203	SLU 71	134	1	10134	0.04	0.94	-0.01
203	SLU 72	106	0	10025	-0.01	-0.13	-0.01
203	SLU 73	160	1	10978	-0.11	1.63	-0.01
203	SLU 74	188	1	11392	0.01	2.5	-0.01
203	SLU 75	159	1	11283	-0.05	1.42	-0.01
203	SLU 76	140	1	11125	-0.07	0.75	-0.01
203	SLU 77	168	1	11540	0.05	1.61	-0.01
203	SLU 78	140	1	11431	-0.01	0.54	-0.01
203	SLU 79	168	1	11454	0.06	1.65	-0.01
203	SLU 80	140	1	11345	0	0.58	-0.01
203	SLU 81	222	1	11726	-0.01	3.72	-0.02
203	SLU 82	193	1	11617	-0.07	2.65	-0.02
203	SLU 83	202	1	11873	0.03	2.84	-0.01
203	SLU 84	174	1	11764	-0.03	1.76	-0.01
203	SLE RA 1	126	0	7309	-0.02	1.96	-0.01
203	SLE RA 2	95	0	7188	-0.08	0.77	-0.01
203	SLE RA 3	113	0	7464	0	1.34	-0.01
203	SLE RA 4	95	0	7391	-0.04	0.63	-0.01
203	SLE RA 5	82	0	7286	-0.06	0.18	-0.01
203	SLE RA 6	101	0	7562	0.02	0.75	-0.01
203	SLE RA 7	82	0	7489	-0.01	0.04	-0.01
203	SLE RA 8	101	0	7505	0.03	0.78	-0.01
203	SLE RA 9	82	0	7432	0	0.07	-0.01
203	SLE RA 10	118	0	8068	-0.07	1.24	-0.01
203	SLE RA 11	136	0	8344	0.01	1.81	-0.01
203	SLE RA 12	117	0	8272	-0.03	1.1	-0.01
203	SLE RA 13	105	0	8166	-0.04	0.65	-0.01
203	SLE RA 14	123	0	8442	0.03	1.22	-0.01
203	SLE RA 15	104	0	8370	0	0.51	-0.01
203	SLE RA 16	123	0	8385	0.04	1.25	-0.01
203	SLE RA 17	104	0	8313	0.01	0.54	-0.01
203	SLE RA 18	159	1	8566	0	2.63	-0.01
203	SLE RA 19	140	0	8494	-0.04	1.92	-0.01
203	SLE RA 20	146	0	8664	0.02	2.04	-0.01
203	SLE RA 21	127	0	8592	-0.02	1.33	-0.01
203	SLE FR 1	126	0	7309	-0.02	1.96	-0.01
203	SLE FR 2	120	0	7285	-0.03	1.72	-0.01
203	SLE FR 3	121	0	7348	-0.01	1.72	-0.01
203	SLE FR 4	130	0	7662	-0.03	1.92	-0.01
203	SLE FR 5	131	0	7725	0	1.93	-0.01
203	SLE FR 6	143	0	7938	-0.01	2.3	-0.01
203	SLE QP 1	126	0	7309	-0.02	1.96	-0.01

Nodo	Cont.	Reazione a traslazione			Reazione a rotazione		
Ind.	N.br.	x	y	z	x	y	z
203	SLE QP 2	136	0	7686	-0.01	2.16	-0.01
203	SLD 1	1832	1	8033	-2.86	73.32	-0.04
203	SLD 2	1832	1	8033	-2.86	73.32	-0.04
203	SLD 3	1739	-3	8640	7.2	69.65	0.08
203	SLD 4	1739	-3	8640	7.2	69.65	0.08
203	SLD 5	786	6	6870	-16.12	29.06	-0.19
203	SLD 6	786	6	6870	-16.12	29.06	-0.19
203	SLD 7	477	-6	8893	17.41	16.85	0.19
203	SLD 8	477	-6	8893	17.41	16.85	0.19
203	SLD 9	-204	7	6479	-17.43	-12.53	-0.21
203	SLD 10	-204	7	6479	-17.43	-12.53	-0.21
203	SLD 11	-513	-5	8502	16.09	-24.74	0.17
203	SLD 12	-513	-5	8502	16.09	-24.74	0.17
203	SLD 13	-1467	4	6732	-7.23	-65.33	-0.1
203	SLD 14	-1467	4	6732	-7.23	-65.33	-0.1
203	SLD 15	-1559	0	7339	2.83	-68.99	0.02
203	SLD 16	-1559	0	7339	2.83	-68.99	0.02
203	SLV 1	3993	1	8498	-6.67	163.99	-0.07
203	SLV 2	3993	1	8498	-6.67	163.99	-0.07
203	SLV 3	3775	-8	9924	17.67	155.38	0.21
203	SLV 4	3775	-8	9924	17.67	155.38	0.21
203	SLV 5	1624	14	5767	-38.93	63.77	-0.46
203	SLV 6	1624	14	5767	-38.93	63.77	-0.46
203	SLV 7	897	-16	10521	42.2	35.07	0.49
203	SLV 8	897	-16	10521	42.2	35.07	0.49
203	SLV 9	-625	16	4851	-42.23	-30.74	-0.51
203	SLV 10	-625	16	4851	-42.23	-30.74	-0.51
203	SLV 11	-1351	-13	9606	38.9	-59.45	0.44
203	SLV 12	-1351	-13	9606	38.9	-59.45	0.44
203	SLV 13	-3503	9	5448	-17.69	-151.06	-0.23
203	SLV 14	-3503	9	5448	-17.69	-151.06	-0.23
203	SLV 15	-3720	0	6874	6.64	-159.67	0.05
203	SLV 16	-3720	0	6874	6.64	-159.67	0.05
204	SLU 1	8	0	7155	0.19	-7.37	-0.01
204	SLU 2	-38	0	6958	-0.01	-9.29	-0.01
204	SLU 3	-13	0	7399	0.22	-8.76	-0.01
204	SLU 4	-40	0	7281	0.1	-9.91	-0.01
204	SLU 5	-58	0	7115	0.03	-10.51	-0.01
204	SLU 6	-33	0	7555	0.25	-9.98	-0.01
204	SLU 7	-60	0	7437	0.13	-11.13	-0.01
204	SLU 8	-32	0	7468	0.26	-9.82	-0.01
204	SLU 9	-59	0	7350	0.14	-10.97	-0.01
204	SLU 10	-25	0	8322	0.04	-10.38	-0.01
204	SLU 11	-1	0	8762	0.27	-9.85	-0.02
204	SLU 12	-28	0	8644	0.15	-11	-0.01
204	SLU 13	-45	0	8478	0.08	-11.6	-0.01
204	SLU 14	-21	0	8919	0.3	-11.07	-0.02
204	SLU 15	-48	0	8801	0.18	-12.22	-0.01
204	SLU 16	-19	0	8831	0.31	-10.9	-0.01
204	SLU 17	-47	0	8713	0.19	-12.05	-0.01
204	SLU 18	26	0	9103	0.27	-8.93	-0.02
204	SLU 19	-2	0	8985	0.15	-10.08	-0.02
204	SLU 20	6	0	9259	0.3	-10.15	-0.02
204	SLU 21	-22	0	9141	0.18	-11.3	-0.01
204	SLU 22	19	0	8378	0.2	-8.39	-0.02
204	SLU 23	-27	0	8181	0	-10.31	-0.01
204	SLU 24	-2	0	8622	0.23	-9.78	-0.02
204	SLU 25	-30	0	8504	0.11	-10.93	-0.02
204	SLU 26	-47	0	8338	0.04	-11.53	-0.01
204	SLU 27	-22	0	8778	0.26	-11	-0.02
204	SLU 28	-50	0	8660	0.14	-12.15	-0.01
204	SLU 29	-21	0	8691	0.27	-10.84	-0.02
204	SLU 30	-49	0	8573	0.15	-11.99	-0.01
204	SLU 31	-15	0	9545	0.05	-11.4	-0.02
204	SLU 32	10	0	9985	0.28	-10.87	-0.02
204	SLU 33	-18	0	9867	0.16	-12.02	-0.02
204	SLU 34	-35	0	9701	0.09	-12.62	-0.02
204	SLU 35	-10	0	10142	0.31	-12.09	-0.02
204	SLU 36	-38	0	10024	0.19	-13.24	-0.02
204	SLU 37	-9	0	10054	0.32	-11.92	-0.02
204	SLU 38	-36	0	9936	0.2	-13.07	-0.02
204	SLU 39	36	0	10326	0.28	-9.95	-0.02
204	SLU 40	9	0	10208	0.16	-11.1	-0.02
204	SLU 41	16	0	10482	0.31	-11.17	-0.02
204	SLU 42	-11	0	10364	0.19	-12.32	-0.02
204	SLU 43	7	0	8882	0.25	-9.23	-0.02
204	SLU 44	-39	0	8685	0.05	-11.15	-0.01
204	SLU 45	-14	0	9126	0.27	-10.62	-0.02
204	SLU 46	-42	0	9008	0.15	-11.77	-0.01
204	SLU 47	-59	0	8842	0.08	-12.38	-0.01
204	SLU 48	-34	0	9282	0.31	-11.84	-0.02
204	SLU 49	-62	0	9164	0.19	-12.99	-0.01
204	SLU 50	-33	0	9195	0.32	-11.68	-0.02
204	SLU 51	-60	0	9077	0.2	-12.83	-0.01
204	SLU 52	-26	0	10049	0.1	-12.24	-0.02
204	SLU 53	-2	0	10490	0.32	-11.71	-0.02
204	SLU 54	-29	0	10371	0.2	-12.86	-0.02
204	SLU 55	-46	0	10205	0.13	-13.46	-0.01
204	SLU 56	-22	0	10646	0.36	-12.93	-0.02
204	SLU 57	-49	0	10528	0.24	-14.08	-0.02
204	SLU 58	-21	0	10558	0.37	-12.77	-0.02

Nodo	Cont.	Reazione a traslazione			Reazione a rotazione		
Ind.	N.br.	x	y	z	x	y	z
204	SLU 59	-48	0	10440	0.25	-13.92	-0.01
204	SLU 60	25	0	10830	0.32	-10.79	-0.02
204	SLU 61	-3	0	10712	0.2	-11.94	-0.02
204	SLU 62	5	0	10986	0.36	-12.01	-0.02
204	SLU 63	-23	0	10868	0.23	-13.16	-0.02
204	SLU 64	18	0	10105	0.26	-10.25	-0.02
204	SLU 65	-28	0	9909	0.06	-12.17	-0.02
204	SLU 66	-4	0	10349	0.28	-11.64	-0.02
204	SLU 67	-31	0	10231	0.16	-12.79	-0.02
204	SLU 68	-48	0	10065	0.09	-13.4	-0.02
204	SLU 69	-24	0	10505	0.32	-12.86	-0.02
204	SLU 70	-51	0	10387	0.2	-14.01	-0.02
204	SLU 71	-22	0	10418	0.33	-12.7	-0.02
204	SLU 72	-50	0	10300	0.21	-13.85	-0.02
204	SLU 73	-16	0	11272	0.11	-13.26	-0.02
204	SLU 74	9	0	11713	0.33	-12.73	-0.02
204	SLU 75	-19	0	11594	0.21	-13.88	-0.02
204	SLU 76	-36	0	11428	0.14	-14.48	-0.02
204	SLU 77	-11	0	11869	0.37	-13.95	-0.02
204	SLU 78	-39	0	11751	0.25	-15.1	-0.02
204	SLU 79	-10	0	11781	0.38	-13.79	-0.02
204	SLU 80	-38	0	11663	0.26	-14.94	-0.02
204	SLU 81	35	0	12053	0.33	-11.81	-0.03
204	SLU 82	8	0	11935	0.21	-12.96	-0.02
204	SLU 83	15	0	12209	0.37	-13.03	-0.02
204	SLU 84	-12	0	12091	0.24	-14.18	-0.02
204	SLE RA 1	11	0	7505	0.2	-7.66	-0.02
204	SLE RA 2	-19	0	7373	0.06	-8.94	-0.01
204	SLE RA 3	-3	0	7667	0.21	-8.59	-0.02
204	SLE RA 4	-21	0	7588	0.13	-9.35	-0.01
204	SLE RA 5	-33	0	7478	0.09	-9.76	-0.01
204	SLE RA 6	-16	0	7771	0.24	-9.4	-0.01
204	SLE RA 7	-35	0	7693	0.16	-10.17	-0.01
204	SLE RA 8	-15	0	7713	0.24	-9.29	-0.01
204	SLE RA 9	-34	0	7634	0.16	-10.06	-0.01
204	SLE RA 10	-11	0	8282	0.1	-9.67	-0.01
204	SLE RA 11	5	0	8576	0.25	-9.31	-0.02
204	SLE RA 12	-13	0	8497	0.17	-10.08	-0.02
204	SLE RA 13	-24	0	8386	0.12	-10.48	-0.01
204	SLE RA 14	-8	0	8680	0.27	-10.13	-0.02
204	SLE RA 15	-26	0	8601	0.19	-10.89	-0.01
204	SLE RA 16	-7	0	8622	0.28	-10.02	-0.02
204	SLE RA 17	-26	0	8543	0.2	-10.79	-0.01
204	SLE RA 18	23	0	8803	0.24	-8.7	-0.02
204	SLE RA 19	5	0	8724	0.16	-9.47	-0.02
204	SLE RA 20	10	0	8907	0.27	-9.51	-0.02
204	SLE RA 21	-9	0	8829	0.19	-10.28	-0.02
204	SLE FR 1	11	0	7505	0.2	-7.66	-0.02
204	SLE FR 2	5	0	7478	0.17	-7.92	-0.02
204	SLE FR 3	6	0	7546	0.21	-7.99	-0.02
204	SLE FR 4	9	0	7868	0.18	-8.23	-0.02
204	SLE FR 5	9	0	7936	0.22	-8.3	-0.02
204	SLE FR 6	17	0	8154	0.22	-8.18	-0.02
204	SLE QP 1	11	0	7505	0.2	-7.66	-0.02
204	SLE QP 2	15	0	7894	0.21	-7.97	-0.02
204	SLD 1	1582	4	8286	-4.45	74.01	-0.07
204	SLD 2	1582	4	8286	-4.45	74.01	-0.07
204	SLD 3	1495	-11	8871	11.85	69.51	0.2
204	SLD 4	1495	-11	8871	11.85	69.51	0.2
204	SLD 5	618	25	7124	-25.91	23.45	-0.45
204	SLD 6	618	25	7124	-25.91	23.45	-0.45
204	SLD 7	326	-27	9075	28.43	8.44	0.47
204	SLD 8	326	-27	9075	28.43	8.44	0.47
204	SLD 9	-296	27	6713	-28	-24.39	-0.5
204	SLD 10	-296	27	6713	-28	-24.39	-0.5
204	SLD 11	-588	-25	8665	26.33	-39.4	0.42
204	SLD 12	-588	-25	8665	26.33	-39.4	0.42
204	SLD 13	-1465	11	6917	-11.43	-85.46	-0.23
204	SLD 14	-1465	11	6917	-11.43	-85.46	-0.23
204	SLD 15	-1553	-4	7502	4.87	-89.96	0.04
204	SLD 16	-1553	-4	7502	4.87	-89.96	0.04
204	SLV 1	3580	10	8788	-10.7	178.5	-0.16
204	SLV 2	3580	10	8788	-10.7	178.5	-0.16
204	SLV 3	3375	-27	10165	28.82	167.94	0.52
204	SLV 4	3375	-27	10165	28.82	167.94	0.52
204	SLV 5	1396	60	6074	-63	63.98	-1.08
204	SLV 6	1396	60	6074	-63	63.98	-1.08
204	SLV 7	711	-65	10664	68.73	28.78	1.17
204	SLV 8	711	-65	10664	68.73	28.78	1.17
204	SLV 9	-681	65	5124	-68.31	-44.73	-1.2
204	SLV 10	-681	65	5124	-68.31	-44.73	-1.2
204	SLV 11	-1367	-60	9715	63.42	-79.93	1.05
204	SLV 12	-1367	-60	9715	63.42	-79.93	1.05
204	SLV 13	-3345	27	5623	-28.39	-183.89	-0.55
204	SLV 14	-3345	27	5623	-28.39	-183.89	-0.55
204	SLV 15	-3551	-10	7000	11.12	-194.45	0.12
204	SLV 16	-3551	-10	7000	11.12	-194.45	0.12
205	SLU 1	-392	0	7444	0.37	-20.57	-0.01
205	SLU 2	-421	0	7233	0.06	-21.96	0
205	SLU 3	-425	0	7708	0.4	-22.35	-0.01
205	SLU 4	-442	0	7581	0.21	-23.19	0

Nodo	Cont.	Reazione a traslazione			Reazione a rotazione		
Ind.	N.br.	x	y	z	x	y	z
205	SLU 5	-448	0	7405	0.09	-23.42	0
205	SLU 6	-451	0	7880	0.43	-23.81	-0.01
205	SLU 7	-468	0	7753	0.24	-24.65	0
205	SLU 8	-445	0	7788	0.43	-23.49	-0.01
205	SLU 9	-462	0	7661	0.25	-24.33	0
205	SLU 10	-492	0	8665	0.15	-25.69	0
205	SLU 11	-495	0	9139	0.48	-26.08	-0.01
205	SLU 12	-513	0	9013	0.29	-26.91	0
205	SLU 13	-518	0	8837	0.17	-27.15	0
205	SLU 14	-521	0	9311	0.51	-27.54	-0.01
205	SLU 15	-539	0	9184	0.32	-28.37	0
205	SLU 16	-515	0	9220	0.51	-27.22	-0.01
205	SLU 17	-533	0	9093	0.33	-28.05	0
205	SLU 18	-493	0	9490	0.49	-25.89	-0.01
205	SLU 19	-510	0	9363	0.3	-26.73	0
205	SLU 20	-519	0	9661	0.52	-27.35	-0.01
205	SLU 21	-537	0	9535	0.33	-28.19	0
205	SLU 22	-456	0	8731	0.42	-23.96	-0.01
205	SLU 23	-485	0	8520	0.11	-25.36	0
205	SLU 24	-488	0	8995	0.45	-25.74	-0.01
205	SLU 25	-506	0	8868	0.26	-26.58	0
205	SLU 26	-511	0	8692	0.14	-26.82	0
205	SLU 27	-514	0	9166	0.48	-27.2	-0.01
205	SLU 28	-532	0	9040	0.29	-28.04	0
205	SLU 29	-508	0	9075	0.48	-26.88	-0.01
205	SLU 30	-526	0	8948	0.29	-27.72	0
205	SLU 31	-555	0	9952	0.19	-29.08	0
205	SLU 32	-558	0	10426	0.53	-29.47	-0.01
205	SLU 33	-576	0	10300	0.34	-30.3	0
205	SLU 34	-582	0	10124	0.22	-30.54	0
205	SLU 35	-585	0	10598	0.56	-30.93	-0.01
205	SLU 36	-602	0	10471	0.37	-31.76	-0.01
205	SLU 37	-579	0	10507	0.56	-30.61	-0.01
205	SLU 38	-596	0	10380	0.37	-31.44	-0.01
205	SLU 39	-556	0	10777	0.54	-29.28	-0.01
205	SLU 40	-574	0	10650	0.35	-30.12	0
205	SLU 41	-583	0	10948	0.57	-30.74	-0.01
205	SLU 42	-600	0	10822	0.38	-31.58	-0.01
205	SLU 43	-488	0	9236	0.47	-25.58	-0.01
205	SLU 44	-517	0	9025	0.16	-26.97	0
205	SLU 45	-520	0	9500	0.5	-27.36	-0.01
205	SLU 46	-538	0	9373	0.31	-28.19	0
205	SLU 47	-544	0	9197	0.19	-28.43	0
205	SLU 48	-547	0	9672	0.52	-28.82	-0.01
205	SLU 49	-564	0	9545	0.34	-29.65	-0.01
205	SLU 50	-541	0	9580	0.53	-28.5	-0.01
205	SLU 51	-558	0	9453	0.34	-29.33	-0.01
205	SLU 52	-588	0	10457	0.24	-30.7	0
205	SLU 53	-591	0	10931	0.58	-31.08	-0.01
205	SLU 54	-608	0	10805	0.39	-31.92	-0.01
205	SLU 55	-614	0	10629	0.27	-32.16	0
205	SLU 56	-617	0	11103	0.61	-32.54	-0.01
205	SLU 57	-635	0	10977	0.42	-33.38	-0.01
205	SLU 58	-611	0	11012	0.61	-32.22	-0.01
205	SLU 59	-629	0	10885	0.42	-33.06	-0.01
205	SLU 60	-589	0	11282	0.59	-30.9	-0.01
205	SLU 61	-606	0	11155	0.4	-31.74	-0.01
205	SLU 62	-615	0	11454	0.61	-32.36	-0.01
205	SLU 63	-633	0	11327	0.43	-33.2	-0.01
205	SLU 64	-551	0	10523	0.52	-28.97	-0.01
205	SLU 65	-581	0	10312	0.21	-30.36	0
205	SLU 66	-584	0	10787	0.54	-30.75	-0.01
205	SLU 67	-601	0	10660	0.36	-31.59	0
205	SLU 68	-607	0	10484	0.24	-31.82	0
205	SLU 69	-610	0	10959	0.57	-32.21	-0.01
205	SLU 70	-628	0	10832	0.39	-33.05	-0.01
205	SLU 71	-604	0	10867	0.58	-31.89	-0.01
205	SLU 72	-622	0	10740	0.39	-32.73	-0.01
205	SLU 73	-651	0	11744	0.29	-34.09	0
205	SLU 74	-654	0	12218	0.63	-34.47	-0.01
205	SLU 75	-672	0	12092	0.44	-35.31	-0.01
205	SLU 76	-678	0	11916	0.32	-35.55	0
205	SLU 77	-681	0	12390	0.65	-35.93	-0.01
205	SLU 78	-698	0	12263	0.47	-36.77	-0.01
205	SLU 79	-675	0	12299	0.66	-35.61	-0.01
205	SLU 80	-692	0	12172	0.47	-36.45	-0.01
205	SLU 81	-652	0	12569	0.63	-34.29	-0.01
205	SLU 82	-670	0	12442	0.45	-35.13	-0.01
205	SLU 83	-678	0	12740	0.66	-35.75	-0.01
205	SLU 84	-696	0	12614	0.48	-36.59	-0.01
205	SLE RA 1	-410	0	7812	0.39	-21.54	-0.01
205	SLE RA 2	-430	0	7671	0.18	-22.47	0
205	SLE RA 3	-432	0	7988	0.41	-22.72	-0.01
205	SLE RA 4	-444	0	7903	0.28	-23.28	0
205	SLE RA 5	-447	0	7786	0.2	-23.44	0
205	SLE RA 6	-449	0	8102	0.42	-23.7	-0.01
205	SLE RA 7	-461	0	8018	0.3	-24.26	0
205	SLE RA 8	-445	0	8041	0.43	-23.48	-0.01
205	SLE RA 9	-457	0	7957	0.3	-24.04	0
205	SLE RA 10	-477	0	8626	0.24	-24.95	0
205	SLE RA 11	-479	0	8942	0.46	-25.21	-0.01

Nodo	Cont.	Reazione a traslazione			Reazione a rotazione		
Ind.	N.br.	x	y	z	x	y	z
205	SLE RA 12	-491	0	8858	0.34	-25.77	-0.01
205	SLE RA 13	-494	0	8740	0.25	-25.93	0
205	SLE RA 14	-496	0	9057	0.48	-26.18	-0.01
205	SLE RA 15	-508	0	8972	0.35	-26.74	-0.01
205	SLE RA 16	-492	0	8996	0.48	-25.97	-0.01
205	SLE RA 17	-504	0	8911	0.36	-26.53	-0.01
205	SLE RA 18	-477	0	9176	0.47	-25.09	-0.01
205	SLE RA 19	-489	0	9091	0.34	-25.64	0
205	SLE RA 20	-495	0	9290	0.48	-26.06	-0.01
205	SLE RA 21	-507	0	9206	0.36	-26.62	-0.01
205	SLE FR 1	-410	0	7812	0.39	-21.54	-0.01
205	SLE FR 2	-414	0	7784	0.35	-21.72	-0.01
205	SLE FR 3	-417	0	7858	0.4	-21.93	-0.01
205	SLE FR 4	-434	0	8193	0.37	-22.79	-0.01
205	SLE FR 5	-437	0	8267	0.42	-22.99	-0.01
205	SLE FR 6	-444	0	8494	0.43	-23.31	-0.01
205	SLE QP 1	-410	0	7812	0.39	-21.54	-0.01
205	SLE QP 2	-430	0	8221	0.41	-22.6	-0.01
205	SLD 1	970	5	6768	-5.37	56.35	0.08
205	SLD 2	970	5	6768	-5.37	56.35	0.08
205	SLD 3	877	-14	7352	14.99	51.51	-0.25
205	SLD 4	877	-14	7352	14.99	51.51	-0.25
205	SLD 5	130	31	6899	-32.19	8.42	0.52
205	SLD 6	130	31	6899	-32.19	8.42	0.52
205	SLD 7	-178	-34	8846	35.66	-7.71	-0.58
205	SLD 8	-178	-34	8846	35.66	-7.71	-0.58
205	SLD 9	-682	34	7596	-34.83	-37.5	0.57
205	SLD 10	-682	34	7596	-34.83	-37.5	0.57
205	SLD 11	-991	-32	9543	33.02	-53.62	-0.53
205	SLD 12	-991	-32	9543	33.02	-53.62	-0.53
205	SLD 13	-1738	14	9090	-14.17	-96.71	0.24
205	SLD 14	-1738	14	9090	-14.17	-96.71	0.24
205	SLD 15	-1830	-6	9675	6.19	-101.55	-0.09
205	SLD 16	-1830	-6	9675	6.19	-101.55	-0.09
205	SLV 1	2754	13	4889	-13.1	156.95	0.19
205	SLV 2	2754	13	4889	-13.1	156.95	0.19
205	SLV 3	2538	-34	6264	36.28	145.63	-0.6
205	SLV 4	2538	-34	6264	36.28	145.63	-0.6
205	SLV 5	853	75	5136	-78.53	48.44	1.26
205	SLV 6	853	75	5136	-78.53	48.44	1.26
205	SLV 7	132	-82	9719	86.06	10.69	-1.4
205	SLV 8	132	-82	9719	86.06	10.69	-1.4
205	SLV 9	-993	82	6723	-85.24	-55.89	1.38
205	SLV 10	-993	82	6723	-85.24	-55.89	1.38
205	SLV 11	-1714	-76	11306	79.35	-93.64	-1.28
205	SLV 12	-1714	-76	11306	79.35	-93.64	-1.28
205	SLV 13	-3399	34	10179	-35.45	-190.83	0.59
205	SLV 14	-3399	34	10179	-35.45	-190.83	0.59
205	SLV 15	-3615	-13	11553	13.92	-202.16	-0.21
205	SLV 16	-3615	-13	11553	13.92	-202.16	-0.21
206	SLU 1	-324	-1	7635	0.6	-51.88	-0.03
206	SLU 2	-340	0	7424	0.12	-52.18	-0.01
206	SLU 3	-345	-1	7919	0.62	-54.75	-0.03
206	SLU 4	-355	0	7792	0.34	-54.93	-0.01
206	SLU 5	-356	0	7613	0.14	-54.34	-0.01
206	SLU 6	-361	-1	8108	0.64	-56.91	-0.03
206	SLU 7	-371	0	7982	0.36	-57.09	-0.01
206	SLU 8	-357	-1	8013	0.64	-56.2	-0.03
206	SLU 9	-366	0	7887	0.36	-56.38	-0.01
206	SLU 10	-397	0	8899	0.24	-62.16	-0.01
206	SLU 11	-402	-1	9394	0.74	-64.73	-0.03
206	SLU 12	-411	-1	9267	0.45	-64.91	-0.02
206	SLU 13	-413	0	9088	0.26	-64.32	-0.01
206	SLU 14	-418	-1	9583	0.76	-66.89	-0.03
206	SLU 15	-427	-1	9457	0.48	-67.07	-0.02
206	SLU 16	-413	-1	9488	0.76	-66.18	-0.03
206	SLU 17	-423	-1	9362	0.47	-66.36	-0.02
206	SLU 18	-405	-1	9742	0.76	-66.14	-0.03
206	SLU 19	-415	-1	9615	0.48	-66.32	-0.02
206	SLU 20	-421	-1	9931	0.78	-68.3	-0.03
206	SLU 21	-431	-1	9805	0.5	-68.48	-0.02
206	SLU 22	-375	-1	8963	0.69	-60.9	-0.03
206	SLU 23	-391	0	8752	0.22	-61.2	-0.01
206	SLU 24	-395	-1	9247	0.72	-63.77	-0.03
206	SLU 25	-405	-1	9121	0.43	-63.95	-0.02
206	SLU 26	-407	0	8942	0.24	-63.36	-0.01
206	SLU 27	-412	-1	9437	0.74	-65.93	-0.03
206	SLU 28	-421	-1	9310	0.46	-66.11	-0.02
206	SLU 29	-407	-1	9342	0.74	-65.22	-0.03
206	SLU 30	-417	-1	9215	0.45	-65.4	-0.02
206	SLU 31	-447	0	10227	0.33	-71.18	-0.02
206	SLU 32	-452	-1	10722	0.83	-73.75	-0.04
206	SLU 33	-462	-1	10596	0.55	-73.93	-0.02
206	SLU 34	-464	0	10417	0.36	-73.34	-0.02
206	SLU 35	-468	-1	10912	0.86	-75.91	-0.04
206	SLU 36	-478	-1	10785	0.57	-76.09	-0.02
206	SLU 37	-464	-1	10817	0.85	-75.2	-0.04
206	SLU 38	-473	-1	10690	0.57	-75.38	-0.02
206	SLU 39	-456	-1	11070	0.86	-75.16	-0.04
206	SLU 40	-465	-1	10944	0.57	-75.34	-0.03
206	SLU 41	-472	-1	11260	0.88	-77.32	-0.04

Nodo	Cont.	Reazione a traslazione			Reazione a rotazione		
Ind.	N.br.	x	y	z	x	y	z
206	SLU 42	-481	-1	11133	0.6	-77.5	-0.03
206	SLU 43	-404	-1	9470	0.74	-64.35	-0.03
206	SLU 44	-420	0	9259	0.27	-64.65	-0.01
206	SLU 45	-425	-1	9754	0.77	-67.22	-0.03
206	SLU 46	-435	-1	9627	0.48	-67.4	-0.02
206	SLU 47	-436	0	9448	0.29	-66.81	-0.01
206	SLU 48	-441	-1	9943	0.79	-69.38	-0.03
206	SLU 49	-451	-1	9817	0.51	-69.56	-0.02
206	SLU 50	-437	-1	9848	0.79	-68.67	-0.03
206	SLU 51	-446	-1	9722	0.5	-68.85	-0.02
206	SLU 52	-477	0	10734	0.39	-74.63	-0.02
206	SLU 53	-482	-1	11229	0.88	-77.2	-0.04
206	SLU 54	-491	-1	11102	0.6	-77.38	-0.02
206	SLU 55	-493	0	10923	0.41	-76.79	-0.02
206	SLU 56	-498	-1	11418	0.91	-79.36	-0.04
206	SLU 57	-507	-1	11292	0.62	-79.54	-0.02
206	SLU 58	-493	-1	11323	0.9	-78.65	-0.04
206	SLU 59	-503	-1	11197	0.62	-78.83	-0.02
206	SLU 60	-485	-1	11577	0.91	-78.61	-0.04
206	SLU 61	-495	-1	11450	0.62	-78.79	-0.03
206	SLU 62	-501	-1	11766	0.93	-80.77	-0.04
206	SLU 63	-511	-1	11640	0.65	-80.95	-0.03
206	SLU 64	-455	-1	10798	0.84	-73.37	-0.04
206	SLU 65	-471	0	10587	0.36	-73.67	-0.02
206	SLU 66	-475	-1	11082	0.86	-76.24	-0.04
206	SLU 67	-485	-1	10956	0.58	-76.42	-0.03
206	SLU 68	-487	0	10777	0.39	-75.83	-0.02
206	SLU 69	-492	-1	11271	0.89	-78.4	-0.04
206	SLU 70	-501	-1	11145	0.6	-78.58	-0.02
206	SLU 71	-487	-1	11177	0.88	-77.69	-0.04
206	SLU 72	-497	-1	11050	0.6	-77.87	-0.02
206	SLU 73	-527	-1	12062	0.48	-83.65	-0.02
206	SLU 74	-532	-1	12557	0.98	-86.22	-0.04
206	SLU 75	-542	-1	12431	0.7	-86.4	-0.03
206	SLU 76	-544	-1	12252	0.5	-85.81	-0.02
206	SLU 77	-548	-1	12746	1	-88.38	-0.04
206	SLU 78	-558	-1	12620	0.72	-88.56	-0.03
206	SLU 79	-544	-1	12652	1	-87.67	-0.04
206	SLU 80	-553	-1	12525	0.71	-87.85	-0.03
206	SLU 81	-536	-1	12905	1	-87.63	-0.04
206	SLU 82	-545	-1	12779	0.72	-87.81	-0.03
206	SLU 83	-552	-1	13095	1.03	-89.79	-0.04
206	SLU 84	-561	-1	12968	0.74	-89.97	-0.03
206	SLE RA 1	-339	-1	8014	0.62	-54.45	-0.03
206	SLE RA 2	-349	0	7874	0.31	-54.66	-0.01
206	SLE RA 3	-353	-1	8204	0.64	-56.37	-0.03
206	SLE RA 4	-359	-1	8119	0.45	-56.49	-0.02
206	SLE RA 5	-360	0	8000	0.32	-56.1	-0.01
206	SLE RA 6	-363	-1	8330	0.66	-57.81	-0.03
206	SLE RA 7	-370	-1	8246	0.47	-57.93	-0.02
206	SLE RA 8	-360	-1	8267	0.65	-57.34	-0.03
206	SLE RA 9	-367	-1	8182	0.46	-57.46	-0.02
206	SLE RA 10	-387	0	8857	0.39	-61.31	-0.02
206	SLE RA 11	-390	-1	9187	0.72	-63.02	-0.03
206	SLE RA 12	-397	-1	9103	0.53	-63.14	-0.02
206	SLE RA 13	-398	0	8983	0.4	-62.75	-0.02
206	SLE RA 14	-401	-1	9313	0.73	-64.46	-0.03
206	SLE RA 15	-407	-1	9229	0.54	-64.58	-0.02
206	SLE RA 16	-398	-1	9250	0.73	-63.99	-0.03
206	SLE RA 17	-404	-1	9166	0.54	-64.11	-0.02
206	SLE RA 18	-393	-1	9419	0.73	-63.96	-0.03
206	SLE RA 19	-399	-1	9335	0.54	-64.08	-0.02
206	SLE RA 20	-404	-1	9545	0.75	-65.4	-0.03
206	SLE RA 21	-410	-1	9461	0.56	-65.52	-0.02
206	SLE FR 1	-339	-1	8014	0.62	-54.45	-0.03
206	SLE FR 2	-341	-1	7986	0.56	-54.5	-0.02
206	SLE FR 3	-343	-1	8065	0.63	-55.03	-0.03
206	SLE FR 4	-357	-1	8408	0.59	-57.35	-0.03
206	SLE FR 5	-359	-1	8486	0.66	-57.88	-0.03
206	SLE FR 6	-366	-1	8717	0.68	-59.21	-0.03
206	SLE QP 1	-339	-1	8014	0.62	-54.45	-0.03
206	SLE QP 2	-355	-1	8436	0.66	-57.31	-0.03
206	SLD 1	399	7	6054	-5.73	24.39	0.25
206	SLD 2	399	7	6054	-5.73	24.39	0.25
206	SLD 3	336	-21	6654	17.3	17.83	-0.11
206	SLD 4	336	-21	6654	17.3	17.83	-0.11
206	SLD 5	-32	44	6811	-36.19	-22.85	0.59
206	SLD 6	-32	44	6811	-36.19	-22.85	0.59
206	SLD 7	-245	-50	8811	40.58	-44.72	-0.59
206	SLD 8	-245	-50	8811	40.58	-44.72	-0.59
206	SLD 9	-465	48	8060	-39.26	-69.9	0.53
206	SLD 10	-465	48	8060	-39.26	-69.9	0.53
206	SLD 11	-678	-46	10060	37.5	-91.77	-0.65
206	SLD 12	-678	-46	10060	37.5	-91.77	-0.65
206	SLD 13	-1045	20	10217	-15.98	-132.44	0.05
206	SLD 14	-1045	20	10217	-15.98	-132.44	0.05
206	SLD 15	-1109	-9	10817	7.05	-139	-0.3
206	SLD 16	-1109	-9	10817	7.05	-139	-0.3
206	SLV 1	1362	17	3003	-14.26	128.52	0.65
206	SLV 2	1362	17	3003	-14.26	128.52	0.65
206	SLV 3	1212	-51	4415	41.61	113.18	-0.22

Nodo	Cont.	Reazione a traslazione			Reazione a rotazione		
Ind.	N.br.	x	y	z	x	y	z
206	SLV 4	1212	-51	4415	41.61	113.18	-0.22
206	SLV 5	386	109	4665	-88.57	21.72	1.49
206	SLV 6	386	109	4665	-88.57	21.72	1.49
206	SLV 7	-111	-120	9370	97.69	-29.44	-1.4
206	SLV 8	-111	-120	9370	97.69	-29.44	-1.4
206	SLV 9	-599	118	7501	-96.38	-85.18	1.34
206	SLV 10	-599	118	7501	-96.38	-85.18	1.34
206	SLV 11	-1096	-110	12206	89.88	-136.33	-1.54
206	SLV 12	-1096	-110	12206	89.88	-136.33	-1.54
206	SLV 13	-1922	49	12457	-40.3	-227.79	0.16
206	SLV 14	-1922	49	12457	-40.3	-227.79	0.16
206	SLV 15	-2072	-19	13868	15.58	-243.13	-0.71
206	SLV 16	-2072	-19	13868	15.58	-243.13	-0.71
207	SLU 1	-1883	-1	5033	0.36	-34.5	0.08
207	SLU 2	-1853	0	4928	0.07	-34.31	0.02
207	SLU 3	-1968	-1	5247	0.38	-36.2	0.08
207	SLU 4	-1950	0	5185	0.2	-36.08	0.04
207	SLU 5	-1914	0	5078	0.08	-35.55	0.02
207	SLU 6	-2029	0	5397	0.38	-37.44	0.08
207	SLU 7	-2011	0	5335	0.21	-37.32	0.04
207	SLU 8	-2004	0	5333	0.38	-36.98	0.08
207	SLU 9	-1986	0	5270	0.2	-36.87	0.04
207	SLU 10	-2222	0	5911	0.14	-41.01	0.03
207	SLU 11	-2337	-1	6230	0.44	-42.9	0.09
207	SLU 12	-2319	0	6167	0.27	-42.78	0.06
207	SLU 13	-2282	0	6061	0.15	-42.25	0.03
207	SLU 14	-2397	-1	6380	0.45	-44.14	0.1
207	SLU 15	-2379	0	6317	0.28	-44.03	0.06
207	SLU 16	-2373	-1	6315	0.45	-43.68	0.09
207	SLU 17	-2355	0	6253	0.27	-43.57	0.06
207	SLU 18	-2409	-1	6436	0.46	-44.07	0.1
207	SLU 19	-2392	0	6374	0.29	-43.96	0.06
207	SLU 20	-2470	-1	6586	0.47	-45.31	0.1
207	SLU 21	-2452	0	6524	0.29	-45.2	0.06
207	SLU 22	-2216	-1	5920	0.43	-40.55	0.09
207	SLU 23	-2186	0	5816	0.13	-40.35	0.03
207	SLU 24	-2301	-1	6134	0.44	-42.25	0.09
207	SLU 25	-2283	0	6072	0.26	-42.13	0.06
207	SLU 26	-2247	0	5966	0.14	-41.6	0.03
207	SLU 27	-2361	-1	6284	0.45	-43.49	0.1
207	SLU 28	-2344	0	6222	0.27	-43.37	0.06
207	SLU 29	-2337	-1	6220	0.44	-43.03	0.09
207	SLU 30	-2319	0	6157	0.27	-42.91	0.06
207	SLU 31	-2555	0	6798	0.2	-47.06	0.04
207	SLU 32	-2669	-1	7117	0.51	-48.95	0.11
207	SLU 33	-2652	0	7054	0.33	-48.83	0.07
207	SLU 34	-2615	0	6948	0.21	-48.3	0.04
207	SLU 35	-2730	-1	7267	0.51	-50.19	0.11
207	SLU 36	-2712	0	7204	0.34	-50.07	0.07
207	SLU 37	-2705	-1	7202	0.51	-49.73	0.11
207	SLU 38	-2688	0	7140	0.33	-49.62	0.07
207	SLU 39	-2742	-1	7323	0.52	-50.12	0.11
207	SLU 40	-2724	0	7261	0.35	-50.01	0.07
207	SLU 41	-2803	-1	7473	0.53	-51.36	0.11
207	SLU 42	-2785	0	7411	0.36	-51.25	0.08
207	SLU 43	-2334	-1	6238	0.45	-42.77	0.1
207	SLU 44	-2304	0	6134	0.16	-42.58	0.03
207	SLU 45	-2419	-1	6453	0.46	-44.47	0.1
207	SLU 46	-2401	0	6390	0.29	-44.36	0.06
207	SLU 47	-2365	0	6284	0.17	-43.82	0.04
207	SLU 48	-2480	-1	6603	0.47	-45.71	0.1
207	SLU 49	-2462	0	6540	0.3	-45.6	0.06
207	SLU 50	-2455	-1	6538	0.47	-45.26	0.1
207	SLU 51	-2437	0	6476	0.29	-45.14	0.06
207	SLU 52	-2673	0	7116	0.23	-49.28	0.05
207	SLU 53	-2787	-1	7435	0.53	-51.18	0.11
207	SLU 54	-2770	0	7373	0.36	-51.06	0.08
207	SLU 55	-2733	0	7266	0.23	-50.53	0.05
207	SLU 56	-2848	-1	7585	0.54	-52.42	0.11
207	SLU 57	-2830	0	7523	0.36	-52.3	0.08
207	SLU 58	-2823	-1	7521	0.53	-51.96	0.11
207	SLU 59	-2806	0	7458	0.36	-51.84	0.08
207	SLU 60	-2860	-1	7642	0.55	-52.35	0.12
207	SLU 61	-2843	0	7579	0.37	-52.23	0.08
207	SLU 62	-2921	-1	7792	0.56	-53.59	0.12
207	SLU 63	-2903	0	7729	0.38	-53.47	0.08
207	SLU 64	-2667	-1	7125	0.51	-48.82	0.11
207	SLU 65	-2637	0	7021	0.22	-48.63	0.05
207	SLU 66	-2752	-1	7340	0.53	-50.52	0.11
207	SLU 67	-2734	0	7277	0.35	-50.41	0.07
207	SLU 68	-2698	0	7171	0.23	-49.87	0.05
207	SLU 69	-2812	-1	7490	0.53	-51.76	0.11
207	SLU 70	-2794	0	7427	0.36	-51.65	0.08
207	SLU 71	-2788	-1	7426	0.53	-51.3	0.11
207	SLU 72	-2770	0	7363	0.35	-51.19	0.08
207	SLU 73	-3006	0	8004	0.29	-55.33	0.06
207	SLU 74	-3120	-1	8322	0.59	-57.22	0.13
207	SLU 75	-3102	-1	8260	0.42	-57.11	0.09
207	SLU 76	-3066	0	8154	0.3	-56.57	0.06
207	SLU 77	-3181	-1	8473	0.6	-58.46	0.13
207	SLU 78	-3163	-1	8410	0.43	-58.35	0.09

Nodo	Cont.	Reazione a traslazione			Reazione a rotazione		
Ind.	N.br.	x	y	z	x	y	z
207	SLU 79	-3156	-1	8408	0.6	-58.01	0.13
207	SLU 80	-3138	-1	8345	0.42	-57.89	0.09
207	SLU 81	-3193	-1	8529	0.61	-58.4	0.13
207	SLU 82	-3175	-1	8466	0.44	-58.28	0.09
207	SLU 83	-3254	-1	8679	0.62	-59.64	0.13
207	SLU 84	-3236	-1	8616	0.44	-59.52	0.09
207	SLE RA 1	-1978	-1	5286	0.38	-36.23	0.08
207	SLE RA 2	-1958	0	5217	0.19	-36.1	0.04
207	SLE RA 3	-2035	-1	5429	0.39	-37.36	0.08
207	SLE RA 4	-2023	0	5387	0.27	-37.28	0.06
207	SLE RA 5	-1999	0	5317	0.19	-36.93	0.04
207	SLE RA 6	-2075	-1	5529	0.4	-38.19	0.08
207	SLE RA 7	-2063	0	5487	0.28	-38.11	0.06
207	SLE RA 8	-2059	-1	5486	0.39	-37.88	0.08
207	SLE RA 9	-2047	0	5444	0.28	-37.8	0.06
207	SLE RA 10	-2204	0	5872	0.23	-40.57	0.05
207	SLE RA 11	-2280	-1	6084	0.44	-41.83	0.09
207	SLE RA 12	-2269	0	6042	0.32	-41.75	0.07
207	SLE RA 13	-2244	0	5972	0.24	-41.39	0.05
207	SLE RA 14	-2321	-1	6184	0.44	-42.65	0.09
207	SLE RA 15	-2309	0	6142	0.32	-42.58	0.07
207	SLE RA 16	-2304	-1	6141	0.44	-42.35	0.09
207	SLE RA 17	-2293	0	6099	0.32	-42.27	0.07
207	SLE RA 18	-2329	-1	6222	0.45	-42.61	0.1
207	SLE RA 19	-2317	0	6180	0.33	-42.53	0.07
207	SLE RA 20	-2369	-1	6322	0.45	-43.44	0.1
207	SLE RA 21	-2358	0	6280	0.33	-43.36	0.07
207	SLE FR 1	-1978	-1	5286	0.38	-36.23	0.08
207	SLE FR 2	-1974	0	5272	0.34	-36.2	0.07
207	SLE FR 3	-1994	-1	5326	0.38	-36.56	0.08
207	SLE FR 4	-2080	0	5553	0.36	-38.12	0.08
207	SLE FR 5	-2100	-1	5607	0.4	-38.47	0.09
207	SLE FR 6	-2154	-1	5754	0.41	-39.42	0.09
207	SLE QP 1	-1978	-1	5286	0.38	-36.23	0.08
207	SLE QP 2	-2083	-1	5567	0.4	-38.14	0.09
207	SLD 1	-508	-4	2209	-2.48	1.1	-0.47
207	SLD 2	-508	-4	2209	-2.48	1.1	-0.47
207	SLD 3	-684	-2	2644	8.3	-2.64	1.64
207	SLD 4	-684	-2	2644	8.3	-2.64	1.64
207	SLD 5	-1343	-5	3899	-16.81	-20.7	-3.29
207	SLD 6	-1343	-5	3899	-16.81	-20.7	-3.29
207	SLD 7	-1932	3	5351	19.12	-33.16	3.76
207	SLD 8	-1932	3	5351	19.12	-33.16	3.76
207	SLD 9	-2235	-4	5783	-18.31	-43.12	-3.59
207	SLD 10	-2235	-4	5783	-18.31	-43.12	-3.59
207	SLD 11	-2824	4	7235	17.61	-55.58	3.46
207	SLD 12	-2824	4	7235	17.61	-55.58	3.46
207	SLD 13	-3483	1	8489	-7.5	-73.64	-1.47
207	SLD 14	-3483	1	8489	-7.5	-73.64	-1.47
207	SLD 15	-3659	3	8925	3.28	-77.38	0.65
207	SLD 16	-3659	3	8925	3.28	-77.38	0.65
207	SLV 1	1502	-9	-2076	-6.31	51.12	-1.22
207	SLV 2	1502	-9	-2076	-6.31	51.12	-1.22
207	SLV 3	1088	-3	-1054	19.85	42.37	3.91
207	SLV 4	1088	-3	-1054	19.85	42.37	3.91
207	SLV 5	-380	-12	1723	-41.28	1.91	-8.09
207	SLV 6	-380	-12	1723	-41.28	1.91	-8.09
207	SLV 7	-1760	7	5131	45.9	-27.26	9.02
207	SLV 8	-1760	7	5131	45.9	-27.26	9.02
207	SLV 9	-2407	-9	6003	-45.1	-49.03	-8.85
207	SLV 10	-2407	-9	6003	-45.1	-49.03	-8.85
207	SLV 11	-3787	11	9410	42.08	-78.19	8.26
207	SLV 12	-3787	11	9410	42.08	-78.19	8.26
207	SLV 13	-5255	2	12188	-19.04	-118.65	-3.74
207	SLV 14	-5255	2	12188	-19.04	-118.65	-3.74
207	SLV 15	-5669	8	13210	7.11	-127.4	1.39
207	SLV 16	-5669	8	13210	7.11	-127.4	1.39
208	SLU 1	1396	-6	2625	2	3.45	-0.19
208	SLU 2	1238	-2	2315	1.11	2.95	-0.15
208	SLU 3	1446	-6	2686	2.06	3.38	-0.19
208	SLU 4	1351	-4	2500	1.53	3.08	-0.17
208	SLU 5	1270	-3	2348	1.15	2.86	-0.16
208	SLU 6	1478	-6	2719	2.1	3.29	-0.2
208	SLU 7	1384	-4	2533	1.57	2.99	-0.18
208	SLU 8	1461	-6	2690	2.08	3.27	-0.2
208	SLU 9	1366	-4	2504	1.54	2.97	-0.18
208	SLU 10	1497	-4	2780	1.43	3.48	-0.19
208	SLU 11	1705	-7	3152	2.39	3.91	-0.23
208	SLU 12	1611	-5	2966	1.86	3.61	-0.21
208	SLU 13	1530	-4	2813	1.47	3.39	-0.19
208	SLU 14	1738	-7	3185	2.43	3.82	-0.23
208	SLU 15	1643	-5	2999	1.9	3.52	-0.21
208	SLU 16	1720	-7	3156	2.41	3.8	-0.23
208	SLU 17	1626	-5	2970	1.87	3.5	-0.21
208	SLU 18	1767	-8	3290	2.46	4.21	-0.24
208	SLU 19	1672	-5	3104	1.93	3.91	-0.22
208	SLU 20	1799	-8	3323	2.51	4.12	-0.24
208	SLU 21	1704	-6	3137	1.97	3.82	-0.22
208	SLU 22	1635	-7	3051	2.31	3.93	-0.22
208	SLU 23	1477	-3	2741	1.42	3.43	-0.19
208	SLU 24	1685	-7	3113	2.37	3.86	-0.23

Nodo	Cont.	Reazione a traslazione			Reazione a rotazione		
Ind.	N.br.	x	y	z	x	y	z
208	SLU 25	1591	-5	2927	1.84	3.56	-0.21
208	SLU 26	1510	-4	2774	1.46	3.34	-0.19
208	SLU 27	1718	-7	3146	2.41	3.77	-0.23
208	SLU 28	1623	-5	2960	1.88	3.47	-0.21
208	SLU 29	1700	-7	3117	2.39	3.75	-0.23
208	SLU 30	1605	-5	2931	1.85	3.45	-0.21
208	SLU 31	1737	-4	3207	1.74	3.96	-0.22
208	SLU 32	1945	-8	3578	2.7	4.39	-0.26
208	SLU 33	1850	-6	3393	2.16	4.09	-0.24
208	SLU 34	1769	-5	3240	1.78	3.87	-0.22
208	SLU 35	1977	-8	3611	2.74	4.3	-0.27
208	SLU 36	1883	-6	3425	2.21	4	-0.24
208	SLU 37	1960	-8	3582	2.72	4.28	-0.26
208	SLU 38	1865	-6	3397	2.18	3.98	-0.24
208	SLU 39	2006	-9	3716	2.77	4.69	-0.27
208	SLU 40	1911	-6	3530	2.24	4.39	-0.25
208	SLU 41	2039	-9	3749	2.81	4.6	-0.27
208	SLU 42	1944	-6	3563	2.28	4.3	-0.25
208	SLU 43	1733	-8	3266	2.49	4.32	-0.23
208	SLU 44	1575	-4	2956	1.6	3.82	-0.2
208	SLU 45	1783	-8	3327	2.56	4.25	-0.24
208	SLU 46	1688	-6	3142	2.02	3.95	-0.22
208	SLU 47	1607	-4	2989	1.64	3.73	-0.2
208	SLU 48	1815	-8	3360	2.6	4.16	-0.24
208	SLU 49	1720	-6	3174	2.06	3.86	-0.22
208	SLU 50	1797	-8	3331	2.57	4.14	-0.24
208	SLU 51	1703	-6	3145	2.04	3.84	-0.22
208	SLU 52	1834	-5	3422	1.93	4.35	-0.23
208	SLU 53	2042	-9	3793	2.88	4.78	-0.27
208	SLU 54	1947	-7	3607	2.35	4.48	-0.25
208	SLU 55	1867	-5	3454	1.97	4.26	-0.24
208	SLU 56	2074	-9	3826	2.92	4.69	-0.28
208	SLU 57	1980	-7	3640	2.39	4.39	-0.26
208	SLU 58	2057	-9	3797	2.9	4.67	-0.28
208	SLU 59	1962	-7	3611	2.36	4.37	-0.26
208	SLU 60	2103	-9	3931	2.96	5.08	-0.28
208	SLU 61	2009	-7	3745	2.42	4.78	-0.26
208	SLU 62	2136	-9	3964	3	4.99	-0.29
208	SLU 63	2041	-7	3778	2.46	4.69	-0.27
208	SLU 64	1972	-9	3692	2.8	4.8	-0.26
208	SLU 65	1814	-5	3382	1.91	4.3	-0.23
208	SLU 66	2022	-9	3754	2.87	4.73	-0.27
208	SLU 67	1927	-7	3568	2.33	4.43	-0.25
208	SLU 68	1847	-5	3415	1.95	4.21	-0.23
208	SLU 69	2054	-9	3787	2.91	4.64	-0.28
208	SLU 70	1960	-7	3601	2.37	4.34	-0.26
208	SLU 71	2037	-9	3758	2.88	4.62	-0.27
208	SLU 72	1942	-7	3572	2.35	4.32	-0.25
208	SLU 73	2074	-6	3848	2.24	4.83	-0.27
208	SLU 74	2282	-10	4220	3.19	5.26	-0.31
208	SLU 75	2187	-8	4034	2.66	4.96	-0.29
208	SLU 76	2106	-6	3881	2.28	4.74	-0.27
208	SLU 77	2314	-10	4252	3.23	5.17	-0.31
208	SLU 78	2219	-8	4067	2.7	4.87	-0.29
208	SLU 79	2296	-10	4224	3.21	5.15	-0.31
208	SLU 80	2202	-8	4038	2.67	4.85	-0.29
208	SLU 81	2343	-10	4357	3.27	5.56	-0.31
208	SLU 82	2248	-8	4172	2.73	5.26	-0.29
208	SLU 83	2375	-10	4390	3.31	5.47	-0.32
208	SLU 84	2280	-8	4204	2.77	5.17	-0.3
208	SLE RA 1	1464	-6	2746	2.09	3.58	-0.2
208	SLE RA 2	1359	-4	2540	1.49	3.25	-0.17
208	SLE RA 3	1498	-7	2788	2.13	3.54	-0.2
208	SLE RA 4	1434	-5	2664	1.77	3.34	-0.19
208	SLE RA 5	1381	-4	2562	1.52	3.19	-0.18
208	SLE RA 6	1519	-7	2809	2.16	3.48	-0.2
208	SLE RA 7	1456	-5	2686	1.8	3.28	-0.19
208	SLE RA 8	1508	-7	2790	2.14	3.47	-0.2
208	SLE RA 9	1444	-5	2666	1.78	3.26	-0.19
208	SLE RA 10	1532	-5	2850	1.71	3.61	-0.2
208	SLE RA 11	1671	-7	3098	2.35	3.9	-0.22
208	SLE RA 12	1607	-6	2974	1.99	3.69	-0.21
208	SLE RA 13	1554	-5	2872	1.74	3.55	-0.2
208	SLE RA 14	1692	-7	3120	2.37	3.84	-0.23
208	SLE RA 15	1629	-6	2996	2.02	3.63	-0.21
208	SLE RA 16	1681	-7	3101	2.36	3.82	-0.23
208	SLE RA 17	1617	-6	2977	2	3.62	-0.21
208	SLE RA 18	1711	-7	3190	2.4	4.09	-0.23
208	SLE RA 19	1648	-6	3066	2.04	3.89	-0.22
208	SLE RA 20	1733	-7	3212	2.42	4.03	-0.23
208	SLE RA 21	1670	-6	3088	2.07	3.83	-0.22
208	SLE FR 1	1464	-6	2746	2.09	3.58	-0.2
208	SLE FR 2	1443	-6	2705	1.97	3.52	-0.19
208	SLE FR 3	1473	-6	2755	2.1	3.56	-0.2
208	SLE FR 4	1517	-6	2838	2.06	3.67	-0.2
208	SLE FR 5	1547	-7	2888	2.19	3.71	-0.21
208	SLE FR 6	1588	-7	2968	2.24	3.84	-0.21
208	SLE QP 1	1464	-6	2746	2.09	3.58	-0.2
208	SLE QP 2	1538	-7	2879	2.18	3.74	-0.21
208	SLD 1	1234	-10	4256	2.45	15.09	-0.04
208	SLD 2	1234	-10	4256	2.45	15.09	-0.04

Nodo	Cont.	Reazione a traslazione			Reazione a rotazione		
Ind.	N.br.	x	y	z	x	y	z
208	SLD 3	1471	-34	4621	6.23	14.64	-0.18
208	SLD 4	1471	-34	4621	6.23	14.64	-0.18
208	SLD 5	1086	29	2739	-3.46	7.84	0.06
208	SLD 6	1086	29	2739	-3.46	7.84	0.06
208	SLD 7	1879	-51	3955	9.11	6.31	-0.41
208	SLD 8	1879	-51	3955	9.11	6.31	-0.41
208	SLD 9	1198	38	1804	-4.76	1.16	0
208	SLD 10	1198	38	1804	-4.76	1.16	0
208	SLD 11	1991	-42	3020	7.82	-0.36	-0.47
208	SLD 12	1991	-42	3020	7.82	-0.36	-0.47
208	SLD 13	1606	20	1138	-1.87	-7.16	-0.23
208	SLD 14	1606	20	1138	-1.87	-7.16	-0.23
208	SLD 15	1843	-4	1503	1.9	-7.62	-0.37
208	SLD 16	1843	-4	1503	1.9	-7.62	-0.37
208	SLV 1	828	-14	6001	2.91	29.58	0.2
208	SLV 2	828	-14	6001	2.91	29.58	0.2
208	SLV 3	1389	-73	6866	12.16	28.48	-0.14
208	SLV 4	1389	-73	6866	12.16	28.48	-0.14
208	SLV 5	475	80	2505	-11.63	13.17	0.44
208	SLV 6	475	80	2505	-11.63	13.17	0.44
208	SLV 7	2344	-116	5387	19.2	9.48	-0.71
208	SLV 8	2344	-116	5387	19.2	9.48	-0.71
208	SLV 9	733	102	372	-14.84	-2.01	0.3
208	SLV 10	733	102	372	-14.84	-2.01	0.3
208	SLV 11	2602	-94	3254	15.98	-5.69	-0.85
208	SLV 12	2602	-94	3254	15.98	-5.69	-0.85
208	SLV 13	1688	60	-1107	-7.8	-21	-0.27
208	SLV 14	1688	60	-1107	-7.8	-21	-0.27
208	SLV 15	2249	1	-242	1.45	-22.11	-0.61
208	SLV 16	2249	1	-242	1.45	-22.11	-0.61
209	SLU 1	-240	-834	7806	21.75	-8.27	0.14
209	SLU 2	-246	-654	6944	14.62	-8.35	0.22
209	SLU 3	-260	-862	8074	22.44	-8.78	0.15
209	SLU 4	-263	-753	7558	18.16	-8.83	0.19
209	SLU 5	-261	-671	7117	15.05	-8.73	0.22
209	SLU 6	-275	-879	8247	22.87	-9.16	0.15
209	SLU 7	-278	-771	7730	18.59	-9.21	0.19
209	SLU 8	-271	-869	8151	22.61	-9.03	0.15
209	SLU 9	-274	-761	7634	18.33	-9.08	0.19
209	SLU 10	-301	-795	8381	18.04	-10.16	0.24
209	SLU 11	-315	-1002	9511	25.87	-10.58	0.17
209	SLU 12	-318	-894	8994	21.59	-10.63	0.21
209	SLU 13	-316	-812	8554	18.47	-10.54	0.24
209	SLU 14	-330	-1019	9684	26.3	-10.96	0.17
209	SLU 15	-333	-911	9167	22.02	-11.01	0.21
209	SLU 16	-326	-1009	9587	26.03	-10.83	0.17
209	SLU 17	-329	-901	9071	21.76	-10.88	0.21
209	SLU 18	-319	-1035	9858	26.64	-10.84	0.17
209	SLU 19	-322	-927	9341	22.37	-10.9	0.22
209	SLU 20	-334	-1052	10031	27.07	-11.23	0.17
209	SLU 21	-337	-944	9514	22.8	-11.28	0.22
209	SLU 22	-291	-966	9129	25.02	-9.92	0.16
209	SLU 23	-296	-786	8268	17.89	-10	0.23
209	SLU 24	-311	-993	9398	25.71	-10.43	0.17
209	SLU 25	-314	-885	8881	21.43	-10.48	0.21
209	SLU 26	-312	-803	8441	18.32	-10.38	0.24
209	SLU 27	-326	-1011	9571	26.14	-10.81	0.17
209	SLU 28	-329	-903	9054	21.86	-10.86	0.21
209	SLU 29	-322	-1001	9475	25.88	-10.68	0.17
209	SLU 30	-325	-892	8958	21.6	-10.73	0.21
209	SLU 31	-351	-927	9705	21.32	-11.8	0.26
209	SLU 32	-366	-1134	10835	29.14	-12.23	0.19
209	SLU 33	-369	-1026	10318	24.86	-12.28	0.23
209	SLU 34	-367	-944	9877	21.75	-12.19	0.26
209	SLU 35	-381	-1151	11007	29.57	-12.61	0.19
209	SLU 36	-384	-1043	10491	25.29	-12.66	0.23
209	SLU 37	-377	-1141	10911	29.31	-12.48	0.19
209	SLU 38	-380	-1033	10394	25.03	-12.53	0.23
209	SLU 39	-370	-1167	11182	29.91	-12.49	0.19
209	SLU 40	-373	-1059	10665	25.64	-12.54	0.24
209	SLU 41	-385	-1184	11354	30.34	-12.87	0.19
209	SLU 42	-388	-1076	10838	26.07	-12.93	0.24
209	SLU 43	-295	-1039	9694	27.15	-10.18	0.18
209	SLU 44	-300	-859	8832	20.02	-10.26	0.25
209	SLU 45	-314	-1067	9962	27.84	-10.69	0.18
209	SLU 46	-318	-959	9446	23.57	-10.74	0.23
209	SLU 47	-315	-876	9005	20.45	-10.65	0.25
209	SLU 48	-330	-1084	10135	28.27	-11.07	0.18
209	SLU 49	-333	-976	9618	24	-11.12	0.23
209	SLU 50	-325	-1074	10039	28.01	-10.94	0.18
209	SLU 51	-329	-966	9522	23.73	-10.99	0.23
209	SLU 52	-355	-1000	10269	23.45	-12.07	0.27
209	SLU 53	-370	-1207	11399	31.27	-12.5	0.2
209	SLU 54	-373	-1099	10882	26.99	-12.55	0.25
209	SLU 55	-371	-1017	10441	23.88	-12.45	0.27
209	SLU 56	-385	-1224	11572	31.7	-12.88	0.2
209	SLU 57	-388	-1116	11055	27.42	-12.93	0.25
209	SLU 58	-380	-1214	11475	31.44	-12.75	0.2
209	SLU 59	-384	-1106	10959	27.16	-12.8	0.25
209	SLU 60	-374	-1240	11746	32.05	-12.76	0.21
209	SLU 61	-377	-1132	11229	27.77	-12.81	0.25

Nodo	Cont.	Reazione a traslazione			Reazione a rotazione		
Ind.	N.br.	x	y	z	x	y	z
209	SLU 62	-389	-1257	11918	32.48	-13.14	0.21
209	SLU 63	-392	-1149	11402	28.2	-13.19	0.25
209	SLU 64	-346	-1171	11017	30.42	-11.83	0.2
209	SLU 65	-351	-991	10156	23.29	-11.91	0.27
209	SLU 66	-365	-1199	11286	31.11	-12.34	0.2
209	SLU 67	-368	-1090	10769	26.84	-12.39	0.25
209	SLU 68	-366	-1008	10329	23.72	-12.29	0.27
209	SLU 69	-380	-1216	11459	31.54	-12.72	0.2
209	SLU 70	-384	-1108	10942	27.27	-12.77	0.25
209	SLU 71	-376	-1206	11362	31.28	-12.59	0.2
209	SLU 72	-379	-1098	10846	27	-12.64	0.25
209	SLU 73	-406	-1132	11593	26.72	-13.72	0.29
209	SLU 74	-420	-1339	12723	34.54	-14.15	0.22
209	SLU 75	-424	-1231	12206	30.26	-14.2	0.27
209	SLU 76	-421	-1149	11765	27.15	-14.1	0.29
209	SLU 77	-436	-1356	12895	34.97	-14.53	0.22
209	SLU 78	-439	-1248	12379	30.69	-14.58	0.27
209	SLU 79	-431	-1346	12799	34.71	-14.4	0.22
209	SLU 80	-434	-1238	12282	30.43	-14.45	0.27
209	SLU 81	-424	-1372	13070	35.32	-14.41	0.23
209	SLU 82	-428	-1264	12553	31.04	-14.46	0.27
209	SLU 83	-440	-1389	13242	35.75	-14.79	0.23
209	SLU 84	-443	-1281	12725	31.47	-14.84	0.27
209	SLE RA 1	-255	-872	8184	22.68	-8.74	0.15
209	SLE RA 2	-258	-752	7610	17.93	-8.79	0.2
209	SLE RA 3	-268	-890	8363	23.14	-9.08	0.15
209	SLE RA 4	-270	-818	8019	20.29	-9.11	0.18
209	SLE RA 5	-268	-763	7725	18.22	-9.05	0.2
209	SLE RA 6	-278	-902	8478	23.43	-9.33	0.15
209	SLE RA 7	-280	-830	8134	20.58	-9.37	0.18
209	SLE RA 8	-275	-895	8414	23.26	-9.25	0.15
209	SLE RA 9	-277	-823	8070	20.4	-9.28	0.18
209	SLE RA 10	-295	-846	8567	20.21	-10	0.21
209	SLE RA 11	-305	-984	9321	25.43	-10.28	0.16
209	SLE RA 12	-307	-912	8976	22.58	-10.31	0.19
209	SLE RA 13	-305	-857	8682	20.5	-10.25	0.21
209	SLE RA 14	-315	-995	9436	25.72	-10.54	0.17
209	SLE RA 15	-317	-923	9091	22.86	-10.57	0.19
209	SLE RA 16	-312	-989	9372	25.54	-10.45	0.16
209	SLE RA 17	-314	-917	9027	22.69	-10.48	0.19
209	SLE RA 18	-307	-1006	9552	25.95	-10.46	0.17
209	SLE RA 19	-309	-934	9208	23.09	-10.49	0.2
209	SLE RA 20	-317	-1017	9667	26.23	-10.71	0.17
209	SLE RA 21	-319	-945	9323	23.38	-10.74	0.2
209	SLE FR 1	-255	-872	8184	22.68	-8.74	0.15
209	SLE FR 2	-255	-848	8069	21.73	-8.75	0.16
209	SLE FR 3	-259	-877	8230	22.8	-8.84	0.15
209	SLE FR 4	-271	-888	8479	22.71	-9.26	0.16
209	SLE FR 5	-275	-917	8640	23.78	-9.35	0.16
209	SLE FR 6	-281	-939	8868	24.31	-9.6	0.16
209	SLE QP 1	-255	-872	8184	22.68	-8.74	0.15
209	SLE QP 2	-270	-912	8594	23.66	-9.25	0.16
209	SLD 1	419	-664	7311	13.26	4.74	-0.06
209	SLD 2	419	-664	7311	13.26	4.74	-0.06
209	SLD 3	375	-938	8581	24.5	3.73	-1.31
209	SLD 4	375	-938	8581	24.5	3.73	-1.31
209	SLD 5	2	-423	6284	3.51	-3.52	1.98
209	SLD 6	2	-423	6284	3.51	-3.52	1.98
209	SLD 7	-143	-1334	10516	40.95	-6.89	-2.18
209	SLD 8	-143	-1334	10516	40.95	-6.89	-2.18
209	SLD 9	-398	-490	6673	6.38	-11.61	2.49
209	SLD 10	-398	-490	6673	6.38	-11.61	2.49
209	SLD 11	-543	-1401	10904	43.81	-14.98	-1.67
209	SLD 12	-543	-1401	10904	43.81	-14.98	-1.67
209	SLD 13	-916	-887	8608	22.83	-22.23	1.62
209	SLD 14	-916	-887	8608	22.83	-22.23	1.62
209	SLD 15	-960	-1160	9877	34.06	-23.25	0.37
209	SLD 16	-960	-1160	9877	34.06	-23.25	0.37
209	SLV 1	1297	-318	5550	-1.15	22.58	-0.37
209	SLV 2	1297	-318	5550	-1.15	22.58	-0.37
209	SLV 3	1195	-961	8545	25.26	20.21	-3.44
209	SLV 4	1195	-961	8545	25.26	20.21	-3.44
209	SLV 5	355	242	3140	-23.84	3.89	4.65
209	SLV 6	355	242	3140	-23.84	3.89	4.65
209	SLV 7	14	-1903	13121	64.2	-4.01	-5.58
209	SLV 8	14	-1903	13121	64.2	-4.01	-5.58
209	SLV 9	-555	79	4068	-16.87	-14.5	5.89
209	SLV 10	-555	79	4068	-16.87	-14.5	5.89
209	SLV 11	-896	-2067	14049	71.16	-22.39	-4.34
209	SLV 12	-896	-2067	14049	71.16	-22.39	-4.34
209	SLV 13	-1736	-863	8644	22.07	-38.71	3.76
209	SLV 14	-1736	-863	8644	22.07	-38.71	3.76
209	SLV 15	-1838	-1506	11638	48.48	-41.08	0.68
209	SLV 16	-1838	-1506	11638	48.48	-41.08	0.68
210	SLU 1	-1321	-4	1675	1.24	-7.48	-0.19
210	SLU 2	-1182	-5	1543	0.97	-7.35	-0.15
210	SLU 3	-1366	-4	1750	1.28	-7.82	-0.2
210	SLU 4	-1283	-5	1671	1.12	-7.74	-0.17
210	SLU 5	-1211	-5	1595	1	-7.59	-0.16
210	SLU 6	-1395	-4	1802	1.3	-8.05	-0.2
210	SLU 7	-1312	-5	1723	1.14	-7.98	-0.18

Nodo	Cont.	Reazione a traslazione			Reazione a rotazione		
Ind.	N.br.	x	y	z	x	y	z
210	SLU 8	-1379	-4	1779	1.29	-7.95	-0.2
210	SLU 9	-1295	-5	1700	1.13	-7.87	-0.17
210	SLU 10	-1429	-5	1868	1.17	-8.89	-0.18
210	SLU 11	-1613	-5	2075	1.48	-9.36	-0.22
210	SLU 12	-1529	-5	1995	1.32	-9.28	-0.2
210	SLU 13	-1458	-5	1920	1.2	-9.13	-0.18
210	SLU 14	-1641	-5	2127	1.5	-9.59	-0.23
210	SLU 15	-1558	-5	2047	1.34	-9.52	-0.2
210	SLU 16	-1625	-5	2104	1.49	-9.49	-0.22
210	SLU 17	-1542	-5	2025	1.33	-9.41	-0.2
210	SLU 18	-1673	-5	2139	1.52	-9.68	-0.23
210	SLU 19	-1590	-5	2060	1.36	-9.61	-0.21
210	SLU 20	-1702	-5	2191	1.55	-9.92	-0.23
210	SLU 21	-1619	-6	2112	1.39	-9.84	-0.21
210	SLU 22	-1548	-5	1975	1.43	-8.89	-0.22
210	SLU 23	-1409	-5	1843	1.16	-8.76	-0.18
210	SLU 24	-1593	-5	2049	1.47	-9.22	-0.22
210	SLU 25	-1510	-5	1970	1.31	-9.15	-0.2
210	SLU 26	-1438	-5	1895	1.19	-8.99	-0.18
210	SLU 27	-1621	-5	2101	1.49	-9.46	-0.22
210	SLU 28	-1538	-5	2022	1.33	-9.38	-0.2
210	SLU 29	-1605	-5	2078	1.48	-9.35	-0.22
210	SLU 30	-1522	-5	1999	1.32	-9.28	-0.2
210	SLU 31	-1656	-6	2167	1.36	-10.3	-0.21
210	SLU 32	-1839	-6	2374	1.66	-10.76	-0.25
210	SLU 33	-1756	-6	2295	1.5	-10.69	-0.23
210	SLU 34	-1684	-6	2219	1.38	-10.53	-0.21
210	SLU 35	-1868	-6	2426	1.69	-11	-0.25
210	SLU 36	-1785	-6	2347	1.53	-10.92	-0.23
210	SLU 37	-1852	-6	2403	1.67	-10.89	-0.25
210	SLU 38	-1768	-6	2324	1.51	-10.82	-0.23
210	SLU 39	-1900	-6	2439	1.71	-11.09	-0.25
210	SLU 40	-1817	-6	2359	1.55	-11.01	-0.23
210	SLU 41	-1929	-6	2491	1.73	-11.32	-0.26
210	SLU 42	-1845	-6	2411	1.57	-11.24	-0.24
210	SLU 43	-1640	-5	2075	1.55	-9.25	-0.24
210	SLU 44	-1501	-6	1943	1.28	-9.12	-0.2
210	SLU 45	-1685	-5	2150	1.59	-9.58	-0.24
210	SLU 46	-1602	-6	2071	1.43	-9.51	-0.22
210	SLU 47	-1530	-6	1995	1.31	-9.35	-0.2
210	SLU 48	-1714	-5	2202	1.61	-9.82	-0.25
210	SLU 49	-1630	-6	2123	1.45	-9.74	-0.22
210	SLU 50	-1697	-5	2179	1.59	-9.71	-0.24
210	SLU 51	-1614	-6	2100	1.44	-9.64	-0.22
210	SLU 52	-1748	-6	2268	1.48	-10.66	-0.23
210	SLU 53	-1931	-6	2475	1.78	-11.12	-0.27
210	SLU 54	-1848	-6	2396	1.62	-11.05	-0.25
210	SLU 55	-1776	-7	2320	1.5	-10.89	-0.23
210	SLU 56	-1960	-6	2527	1.81	-11.36	-0.27
210	SLU 57	-1877	-6	2447	1.65	-11.28	-0.25
210	SLU 58	-1944	-6	2504	1.79	-11.25	-0.27
210	SLU 59	-1860	-6	2425	1.63	-11.18	-0.25
210	SLU 60	-1992	-6	2539	1.83	-11.45	-0.28
210	SLU 61	-1909	-7	2460	1.67	-11.37	-0.25
210	SLU 62	-2021	-6	2591	1.85	-11.68	-0.28
210	SLU 63	-1937	-7	2512	1.69	-11.6	-0.26
210	SLU 64	-1867	-6	2375	1.73	-10.65	-0.26
210	SLU 65	-1728	-6	2243	1.47	-10.52	-0.23
210	SLU 66	-1912	-6	2449	1.77	-10.99	-0.27
210	SLU 67	-1828	-6	2370	1.61	-10.91	-0.25
210	SLU 68	-1756	-7	2295	1.49	-10.75	-0.23
210	SLU 69	-1940	-6	2501	1.8	-11.22	-0.27
210	SLU 70	-1857	-6	2422	1.64	-11.14	-0.25
210	SLU 71	-1924	-6	2478	1.78	-11.12	-0.27
210	SLU 72	-1841	-6	2399	1.62	-11.04	-0.25
210	SLU 73	-1974	-7	2567	1.67	-12.06	-0.25
210	SLU 74	-2158	-7	2774	1.97	-12.53	-0.3
210	SLU 75	-2075	-7	2695	1.81	-12.45	-0.27
210	SLU 76	-2003	-7	2619	1.69	-12.29	-0.26
210	SLU 77	-2187	-7	2826	2	-12.76	-0.3
210	SLU 78	-2103	-7	2747	1.84	-12.68	-0.28
210	SLU 79	-2170	-7	2803	1.98	-12.66	-0.3
210	SLU 80	-2087	-7	2724	1.82	-12.58	-0.27
210	SLU 81	-2219	-7	2839	2.02	-12.85	-0.3
210	SLU 82	-2135	-7	2759	1.86	-12.77	-0.28
210	SLU 83	-2247	-7	2891	2.04	-13.09	-0.31
210	SLU 84	-2164	-7	2811	1.88	-13.01	-0.28
210	SLE RA 1	-1386	-4	1761	1.29	-7.89	-0.2
210	SLE RA 2	-1293	-5	1673	1.12	-7.8	-0.17
210	SLE RA 3	-1416	-4	1811	1.32	-8.11	-0.2
210	SLE RA 4	-1360	-5	1758	1.21	-8.06	-0.19
210	SLE RA 5	-1313	-5	1708	1.13	-7.95	-0.17
210	SLE RA 6	-1435	-5	1845	1.33	-8.27	-0.2
210	SLE RA 7	-1380	-5	1792	1.23	-8.21	-0.19
210	SLE RA 8	-1424	-5	1830	1.33	-8.2	-0.2
210	SLE RA 9	-1369	-5	1777	1.22	-8.14	-0.19
210	SLE RA 10	-1458	-5	1889	1.25	-8.82	-0.19
210	SLE RA 11	-1580	-5	2027	1.45	-9.14	-0.22
210	SLE RA 12	-1525	-5	1974	1.34	-9.08	-0.2
210	SLE RA 13	-1477	-5	1924	1.26	-8.98	-0.19
210	SLE RA 14	-1599	-5	2062	1.47	-9.29	-0.22

Nodo	Cont.	Reazione a traslazione			Reazione a rotazione		
Ind.	N.br.	x	y	z	x	y	z
210	SLE RA 15	-1544	-5	2009	1.36	-9.24	-0.21
210	SLE RA 16	-1589	-5	2047	1.46	-9.22	-0.22
210	SLE RA 17	-1533	-5	1994	1.35	-9.17	-0.2
210	SLE RA 18	-1621	-5	2070	1.48	-9.35	-0.22
210	SLE RA 19	-1565	-5	2017	1.37	-9.3	-0.21
210	SLE RA 20	-1640	-5	2105	1.5	-9.51	-0.23
210	SLE RA 21	-1584	-5	2052	1.39	-9.46	-0.21
210	SLE FR 1	-1386	-4	1761	1.29	-7.89	-0.2
210	SLE FR 2	-1367	-4	1743	1.26	-7.87	-0.19
210	SLE FR 3	-1394	-4	1775	1.3	-7.95	-0.2
210	SLE FR 4	-1438	-5	1836	1.31	-8.31	-0.2
210	SLE FR 5	-1464	-5	1868	1.36	-8.39	-0.21
210	SLE FR 6	-1503	-5	1916	1.39	-8.62	-0.21
210	SLE QP 1	-1386	-4	1761	1.29	-7.89	-0.2
210	SLE QP 2	-1456	-5	1854	1.35	-8.33	-0.21
210	SLD 1	-1269	17	659	-0.1	-3.38	0.01
210	SLD 2	-1269	17	659	-0.1	-3.38	0.01
210	SLD 3	-1471	-1	915	1.06	-3.91	-0.16
210	SLD 4	-1471	-1	915	1.06	-3.91	-0.16
210	SLD 5	-1093	30	1106	-0.83	-6.04	0.11
210	SLD 6	-1093	30	1106	-0.83	-6.04	0.11
210	SLD 7	-1768	-31	1961	3.01	-7.8	-0.44
210	SLD 8	-1768	-31	1961	3.01	-7.8	-0.44
210	SLD 9	-1145	22	1746	-0.31	-8.85	0.03
210	SLD 10	-1145	22	1746	-0.31	-8.85	0.03
210	SLD 11	-1819	-39	2601	3.53	-10.61	-0.52
210	SLD 12	-1819	-39	2601	3.53	-10.61	-0.52
210	SLD 13	-1441	-8	2792	1.64	-12.74	-0.25
210	SLD 14	-1441	-8	2792	1.64	-12.74	-0.25
210	SLD 15	-1644	-26	3049	2.79	-13.27	-0.42
210	SLD 16	-1644	-26	3049	2.79	-13.27	-0.42
210	SLV 1	-1006	49	-870	-2.18	2.92	0.31
210	SLV 2	-1006	49	-870	-2.18	2.92	0.31
210	SLV 3	-1483	4	-266	0.63	1.67	-0.08
210	SLV 4	-1483	4	-266	0.63	1.67	-0.08
210	SLV 5	-597	80	121	-3.97	-3.06	0.56
210	SLV 6	-597	80	121	-3.97	-3.06	0.56
210	SLV 7	-2189	-71	2134	5.39	-7.22	-0.77
210	SLV 8	-2189	-71	2134	5.39	-7.22	-0.77
210	SLV 9	-724	61	1574	-2.69	-9.43	0.36
210	SLV 10	-724	61	1574	-2.69	-9.43	0.36
210	SLV 11	-2316	-89	3587	6.67	-13.6	-0.97
210	SLV 12	-2316	-89	3587	6.67	-13.6	-0.97
210	SLV 13	-1430	-13	3973	2.07	-18.32	-0.33
210	SLV 14	-1430	-13	3973	2.07	-18.32	-0.33
210	SLV 15	-1907	-58	4577	4.88	-19.57	-0.72
210	SLV 16	-1907	-58	4577	4.88	-19.57	-0.72
211	SLU 1	1196	-1	3456	0.32	17.05	-0.06
211	SLU 2	1171	1	3361	0.05	17.05	0
211	SLU 3	1204	-1	3503	0.33	16.8	-0.06
211	SLU 4	1189	0	3446	0.17	16.8	-0.03
211	SLU 5	1171	1	3382	0.06	16.77	-0.01
211	SLU 6	1204	-1	3523	0.34	16.53	-0.06
211	SLU 7	1189	0	3467	0.18	16.53	-0.03
211	SLU 8	1197	-1	3497	0.34	16.49	-0.06
211	SLU 9	1181	0	3440	0.18	16.49	-0.03
211	SLU 10	1361	0	3946	0.15	19.13	-0.02
211	SLU 11	1394	-1	4088	0.44	18.89	-0.08
211	SLU 12	1379	0	4031	0.28	18.89	-0.05
211	SLU 13	1361	0	3967	0.17	18.86	-0.03
211	SLU 14	1394	-1	4109	0.45	18.61	-0.08
211	SLU 15	1379	0	4052	0.29	18.61	-0.05
211	SLU 16	1386	-1	4082	0.45	18.58	-0.08
211	SLU 17	1371	0	4025	0.29	18.58	-0.05
211	SLU 18	1467	-1	4292	0.47	20.03	-0.09
211	SLU 19	1452	0	4235	0.31	20.03	-0.05
211	SLU 20	1467	-1	4312	0.48	19.75	-0.09
211	SLU 21	1452	0	4255	0.32	19.75	-0.06
211	SLU 22	1359	-1	3966	0.4	18.73	-0.07
211	SLU 23	1334	0	3872	0.14	18.73	-0.02
211	SLU 24	1367	-1	4013	0.42	18.48	-0.08
211	SLU 25	1352	0	3957	0.26	18.48	-0.04
211	SLU 26	1334	0	3892	0.15	18.45	-0.02
211	SLU 27	1367	-1	4034	0.43	18.2	-0.08
211	SLU 28	1352	0	3977	0.27	18.2	-0.05
211	SLU 29	1359	-1	4007	0.43	18.17	-0.08
211	SLU 30	1344	0	3950	0.27	18.17	-0.05
211	SLU 31	1524	0	4457	0.24	20.81	-0.04
211	SLU 32	1556	-1	4599	0.53	20.57	-0.1
211	SLU 33	1541	-1	4542	0.37	20.57	-0.07
211	SLU 34	1524	0	4477	0.26	20.53	-0.04
211	SLU 35	1556	-2	4619	0.54	20.29	-0.1
211	SLU 36	1541	-1	4562	0.38	20.29	-0.07
211	SLU 37	1549	-1	4592	0.54	20.26	-0.1
211	SLU 38	1534	-1	4535	0.38	20.26	-0.07
211	SLU 39	1630	-2	4802	0.56	21.7	-0.1
211	SLU 40	1615	-1	4745	0.4	21.7	-0.07
211	SLU 41	1630	-2	4822	0.57	21.43	-0.11
211	SLU 42	1615	-1	4766	0.41	21.43	-0.07
211	SLU 43	1500	-1	4318	0.38	21.59	-0.07
211	SLU 44	1474	0	4223	0.11	21.59	-0.01

Nodo	Cont.	Reazione a traslazione			Reazione a rotazione		
Ind.	N.br.	x	y	z	x	y	z
211	SLU 45	1507	-1	4365	0.39	21.34	-0.07
211	SLU 46	1492	0	4308	0.23	21.34	-0.04
211	SLU 47	1475	0	4243	0.12	21.31	-0.02
211	SLU 48	1507	-1	4385	0.41	21.07	-0.07
211	SLU 49	1492	0	4328	0.25	21.07	-0.04
211	SLU 50	1500	-1	4358	0.41	21.03	-0.07
211	SLU 51	1485	0	4302	0.24	21.03	-0.04
211	SLU 52	1664	0	4808	0.22	23.67	-0.03
211	SLU 53	1697	-1	4950	0.5	23.43	-0.09
211	SLU 54	1682	0	4893	0.34	23.43	-0.06
211	SLU 55	1664	0	4829	0.23	23.39	-0.04
211	SLU 56	1697	-1	4970	0.52	23.15	-0.09
211	SLU 57	1682	-1	4914	0.35	23.15	-0.06
211	SLU 58	1689	-1	4944	0.51	23.12	-0.09
211	SLU 59	1674	-1	4887	0.35	23.12	-0.06
211	SLU 60	1770	-2	5154	0.53	24.57	-0.1
211	SLU 61	1755	-1	5097	0.37	24.57	-0.06
211	SLU 62	1770	-2	5174	0.55	24.29	-0.1
211	SLU 63	1755	-1	5117	0.39	24.29	-0.07
211	SLU 64	1662	-1	4828	0.47	23.27	-0.08
211	SLU 65	1637	0	4733	0.2	23.27	-0.03
211	SLU 66	1670	-1	4875	0.48	23.02	-0.09
211	SLU 67	1655	0	4818	0.32	23.02	-0.06
211	SLU 68	1637	0	4754	0.21	22.99	-0.03
211	SLU 69	1670	-1	4896	0.5	22.74	-0.09
211	SLU 70	1655	0	4839	0.34	22.74	-0.06
211	SLU 71	1662	-1	4869	0.5	22.71	-0.09
211	SLU 72	1647	0	4812	0.33	22.71	-0.06
211	SLU 73	1827	0	5319	0.31	25.35	-0.05
211	SLU 74	1859	-2	5460	0.59	25.11	-0.11
211	SLU 75	1844	-1	5404	0.43	25.11	-0.08
211	SLU 76	1827	0	5339	0.32	25.07	-0.05
211	SLU 77	1859	-2	5481	0.61	24.83	-0.11
211	SLU 78	1844	-1	5424	0.44	24.83	-0.08
211	SLU 79	1852	-2	5454	0.6	24.79	-0.11
211	SLU 80	1837	-1	5397	0.44	24.79	-0.08
211	SLU 81	1933	-2	5664	0.62	26.24	-0.11
211	SLU 82	1918	-1	5607	0.46	26.24	-0.08
211	SLU 83	1933	-2	5684	0.64	25.97	-0.12
211	SLU 84	1918	-1	5627	0.47	25.97	-0.08
211	SLE RA 1	1243	-1	3602	0.34	17.53	-0.06
211	SLE RA 2	1226	0	3539	0.16	17.53	-0.03
211	SLE RA 3	1248	-1	3633	0.35	17.37	-0.06
211	SLE RA 4	1238	0	3595	0.24	17.37	-0.04
211	SLE RA 5	1226	0	3552	0.17	17.34	-0.03
211	SLE RA 6	1248	-1	3647	0.36	17.18	-0.07
211	SLE RA 7	1238	0	3609	0.25	17.18	-0.04
211	SLE RA 8	1243	-1	3629	0.36	17.16	-0.07
211	SLE RA 9	1233	0	3591	0.25	17.16	-0.04
211	SLE RA 10	1353	0	3929	0.23	18.92	-0.04
211	SLE RA 11	1374	-1	4023	0.42	18.75	-0.08
211	SLE RA 12	1364	-1	3985	0.32	18.75	-0.06
211	SLE RA 13	1353	0	3942	0.24	18.73	-0.04
211	SLE RA 14	1374	-1	4037	0.43	18.57	-0.08
211	SLE RA 15	1364	-1	3999	0.32	18.57	-0.06
211	SLE RA 16	1369	-1	4019	0.43	18.55	-0.08
211	SLE RA 17	1359	-1	3981	0.32	18.55	-0.06
211	SLE RA 18	1423	-1	4159	0.44	19.51	-0.08
211	SLE RA 19	1413	-1	4121	0.34	19.51	-0.06
211	SLE RA 20	1424	-1	4173	0.45	19.33	-0.08
211	SLE RA 21	1413	-1	4135	0.35	19.33	-0.06
211	SLE FR 1	1243	-1	3602	0.34	17.53	-0.06
211	SLE FR 2	1240	-1	3589	0.3	17.53	-0.05
211	SLE FR 3	1243	-1	3607	0.34	17.45	-0.06
211	SLE FR 4	1294	-1	3756	0.34	18.12	-0.06
211	SLE FR 5	1297	-1	3774	0.38	18.05	-0.07
211	SLE FR 6	1333	-1	3880	0.39	18.52	-0.07
211	SLE QP 1	1243	-1	3602	0.34	17.53	-0.06
211	SLE QP 2	1297	-1	3769	0.37	18.12	-0.07
211	SLD 1	2700	-16	6623	4.16	54.18	-0.52
211	SLD 2	2700	-16	6623	4.16	54.18	-0.52
211	SLD 3	2650	24	6532	-1.62	52.48	0.77
211	SLD 4	2650	24	6532	-1.62	52.48	0.77
211	SLD 5	1795	-65	4764	10.28	31.52	-2.15
211	SLD 6	1795	-65	4764	10.28	31.52	-2.15
211	SLD 7	1626	67	4460	-9	25.86	2.13
211	SLD 8	1626	67	4460	-9	25.86	2.13
211	SLD 9	968	-69	3079	9.74	10.39	-2.27
211	SLD 10	968	-69	3079	9.74	10.39	-2.27
211	SLD 11	800	63	2774	-9.54	4.73	2.02
211	SLD 12	800	63	2774	-9.54	4.73	2.02
211	SLD 13	-56	-26	1006	2.37	-16.23	-0.9
211	SLD 14	-56	-26	1006	2.37	-16.23	-0.9
211	SLD 15	-106	13	915	-3.42	-17.93	0.38
211	SLD 16	-106	13	915	-3.42	-17.93	0.38
211	SLV 1	4487	-38	10261	10.02	100.07	-1.23
211	SLV 2	4487	-38	10261	10.02	100.07	-1.23
211	SLV 3	4368	63	10041	-4.8	96.1	2.06
211	SLV 4	4368	63	10041	-4.8	96.1	2.06
211	SLV 5	2434	-166	6051	25.74	48.74	-5.41
211	SLV 6	2434	-166	6051	25.74	48.74	-5.41

Nodo	Cont.	Reazione a traslazione			Reazione a rotazione		
Ind.	N.br.	x	y	z	x	y	z
211	SLV 7	2038	172	5316	-23.65	35.49	5.57
211	SLV 8	2038	172	5316	-23.65	35.49	5.57
211	SLV 9	556	-174	2222	24.39	0.76	-5.7
211	SLV 10	556	-174	2222	24.39	0.76	-5.7
211	SLV 11	160	164	1487	-24.99	-12.49	5.28
211	SLV 12	160	164	1487	-24.99	-12.49	5.28
211	SLV 13	-1774	-66	-2503	5.54	-59.85	-2.2
211	SLV 14	-1774	-66	-2503	5.54	-59.85	-2.2
211	SLV 15	-1893	36	-2723	-9.27	-63.82	1.1
211	SLV 16	-1893	36	-2723	-9.27	-63.82	1.1
212	SLU 1	182	-1	6084	0.47	19.58	0.04
212	SLU 2	198	0	5896	0.36	20.3	-0.01
212	SLU 3	171	-1	6229	0.5	18.49	0.04
212	SLU 4	181	-1	6116	0.43	18.93	0.01
212	SLU 5	189	0	5982	0.38	19.35	-0.01
212	SLU 6	162	-1	6315	0.52	17.54	0.04
212	SLU 7	172	-1	6202	0.45	17.98	0.01
212	SLU 8	164	-1	6257	0.52	17.67	0.04
212	SLU 9	173	-1	6144	0.45	18.1	0.01
212	SLU 10	197	-1	6984	0.52	21.25	0
212	SLU 11	169	-1	7317	0.66	19.44	0.06
212	SLU 12	179	-1	7204	0.59	19.88	0.02
212	SLU 13	187	-1	7070	0.54	20.3	0
212	SLU 14	160	-1	7403	0.68	18.49	0.06
212	SLU 15	170	-1	7290	0.61	18.93	0.03
212	SLU 16	162	-1	7345	0.68	18.62	0.06
212	SLU 17	172	-1	7232	0.61	19.05	0.03
212	SLU 18	180	-1	7638	0.71	20.93	0.06
212	SLU 19	189	-1	7525	0.63	21.37	0.03
212	SLU 20	170	-1	7725	0.73	19.98	0.06
212	SLU 21	180	-1	7612	0.66	20.42	0.03
212	SLU 22	177	-1	7052	0.6	20.02	0.05
212	SLU 23	193	-1	6863	0.49	20.75	0
212	SLU 24	166	-1	7197	0.63	18.94	0.05
212	SLU 25	175	-1	7083	0.56	19.38	0.02
212	SLU 26	184	-1	6950	0.51	19.8	0
212	SLU 27	156	-1	7283	0.65	17.99	0.06
212	SLU 28	166	-1	7170	0.58	18.42	0.02
212	SLU 29	158	-1	7225	0.65	18.12	0.06
212	SLU 30	168	-1	7112	0.58	18.55	0.02
212	SLU 31	191	-1	7951	0.65	21.7	0.01
212	SLU 32	164	-2	8285	0.79	19.89	0.07
212	SLU 33	174	-1	8171	0.72	20.33	0.04
212	SLU 34	182	-1	8038	0.67	20.74	0.02
212	SLU 35	155	-2	8371	0.81	18.94	0.07
212	SLU 36	164	-1	8258	0.74	19.37	0.04
212	SLU 37	156	-2	8313	0.81	19.07	0.07
212	SLU 38	166	-1	8200	0.74	19.5	0.04
212	SLU 39	174	-2	8606	0.84	21.38	0.07
212	SLU 40	184	-1	8493	0.76	21.82	0.04
212	SLU 41	165	-2	8693	0.86	20.43	0.07
212	SLU 42	175	-1	8580	0.79	20.86	0.04
212	SLU 43	238	-1	7577	0.57	25.3	0.05
212	SLU 44	255	-1	7389	0.46	26.02	0
212	SLU 45	227	-1	7722	0.6	24.21	0.05
212	SLU 46	237	-1	7609	0.53	24.65	0.02
212	SLU 47	246	-1	7476	0.48	25.07	0
212	SLU 48	218	-1	7809	0.62	23.26	0.05
212	SLU 49	228	-1	7696	0.55	23.7	0.02
212	SLU 50	220	-1	7751	0.61	23.39	0.05
212	SLU 51	230	-1	7638	0.54	23.82	0.02
212	SLU 52	253	-1	8477	0.62	26.97	0.01
212	SLU 53	226	-1	8810	0.76	25.16	0.06
212	SLU 54	235	-1	8697	0.69	25.6	0.03
212	SLU 55	244	-1	8564	0.64	26.02	0.01
212	SLU 56	216	-2	8897	0.78	24.21	0.07
212	SLU 57	226	-1	8784	0.71	24.65	0.03
212	SLU 58	218	-2	8839	0.78	24.34	0.07
212	SLU 59	228	-1	8726	0.71	24.77	0.03
212	SLU 60	236	-2	9132	0.8	26.65	0.07
212	SLU 61	246	-1	9019	0.73	27.09	0.04
212	SLU 62	227	-2	9218	0.82	25.7	0.07
212	SLU 63	237	-1	9105	0.75	26.14	0.04
212	SLU 64	233	-1	8545	0.7	25.74	0.06
212	SLU 65	249	-1	8357	0.59	26.47	0.01
212	SLU 66	222	-1	8690	0.73	24.66	0.06
212	SLU 67	232	-1	8577	0.66	25.1	0.03
212	SLU 68	240	-1	8443	0.61	25.52	0.01
212	SLU 69	213	-1	8777	0.75	23.71	0.06
212	SLU 70	223	-1	8663	0.68	24.14	0.03
212	SLU 71	215	-1	8718	0.74	23.84	0.06
212	SLU 72	224	-1	8605	0.67	24.27	0.03
212	SLU 73	248	-1	9445	0.75	27.42	0.02
212	SLU 74	220	-2	9778	0.89	25.61	0.08
212	SLU 75	230	-1	9665	0.82	26.05	0.04
212	SLU 76	238	-1	9531	0.77	26.46	0.02
212	SLU 77	211	-2	9865	0.91	24.66	0.08
212	SLU 78	221	-1	9751	0.84	25.09	0.05
212	SLU 79	213	-2	9806	0.91	24.79	0.08
212	SLU 80	223	-1	9693	0.84	25.22	0.05
212	SLU 81	231	-2	10100	0.93	27.1	0.08

Nodo	Cont.	Reazione a traslazione			Reazione a rotazione		
Ind.	N.br.	x	y	z	x	y	z
212	SLU 82	240	-1	9986	0.86	27.54	0.05
212	SLU 83	221	-2	10186	0.95	26.15	0.08
212	SLU 84	231	-1	10073	0.88	26.58	0.05
212	SLE RA 1	181	-1	6361	0.51	19.7	0.04
212	SLE RA 2	191	-1	6235	0.43	20.19	0.01
212	SLE RA 3	173	-1	6457	0.53	18.98	0.04
212	SLE RA 4	180	-1	6382	0.48	19.27	0.02
212	SLE RA 5	185	-1	6293	0.45	19.55	0.01
212	SLE RA 6	167	-1	6515	0.54	18.35	0.05
212	SLE RA 7	174	-1	6439	0.49	18.64	0.02
212	SLE RA 8	168	-1	6476	0.54	18.43	0.05
212	SLE RA 9	175	-1	6401	0.49	18.72	0.02
212	SLE RA 10	190	-1	6960	0.54	20.82	0.02
212	SLE RA 11	172	-1	7182	0.64	19.62	0.05
212	SLE RA 12	178	-1	7107	0.59	19.91	0.03
212	SLE RA 13	184	-1	7018	0.56	20.19	0.02
212	SLE RA 14	166	-1	7240	0.65	18.98	0.06
212	SLE RA 15	172	-1	7165	0.6	19.27	0.03
212	SLE RA 16	167	-1	7201	0.65	19.07	0.06
212	SLE RA 17	174	-1	7126	0.6	19.36	0.03
212	SLE RA 18	179	-1	7397	0.67	20.61	0.06
212	SLE RA 19	185	-1	7321	0.62	20.9	0.04
212	SLE RA 20	173	-1	7454	0.68	19.97	0.06
212	SLE RA 21	179	-1	7379	0.63	20.26	0.04
212	SLE FR 1	181	-1	6361	0.51	19.7	0.04
212	SLE FR 2	183	-1	6335	0.5	19.8	0.04
212	SLE FR 3	178	-1	6384	0.52	19.45	0.04
212	SLE FR 4	182	-1	6646	0.54	20.07	0.04
212	SLE FR 5	178	-1	6695	0.56	19.72	0.05
212	SLE FR 6	180	-1	6879	0.59	20.16	0.05
212	SLE QP 1	181	-1	6361	0.51	19.7	0.04
212	SLE QP 2	180	-1	6671	0.56	19.98	0.05
212	SLD 1	880	1	8411	0.65	98.67	0.5
212	SLD 2	880	1	8411	0.65	98.67	0.5
212	SLD 3	831	-7	8538	2.84	94.37	-0.79
212	SLD 4	831	-7	8538	2.84	94.37	-0.79
212	SLD 5	465	12	7001	-2.72	50.1	2.14
212	SLD 6	465	12	7001	-2.72	50.1	2.14
212	SLD 7	300	-16	7423	4.55	35.77	-2.16
212	SLD 8	300	-16	7423	4.55	35.77	-2.16
212	SLD 9	60	13	5919	-3.43	4.18	2.25
212	SLD 10	60	13	5919	-3.43	4.18	2.25
212	SLD 11	-105	-14	6342	3.84	-10.15	-2.04
212	SLD 12	-105	-14	6342	3.84	-10.15	-2.04
212	SLD 13	-470	5	4805	-1.72	-54.42	0.88
212	SLD 14	-470	5	4805	-1.72	-54.42	0.88
212	SLD 15	-520	-3	4932	0.46	-58.72	-0.41
212	SLD 16	-520	-3	4932	0.46	-58.72	-0.41
212	SLV 1	1771	5	10618	0.73	198.83	1.21
212	SLV 2	1771	5	10618	0.73	198.83	1.21
212	SLV 3	1655	-16	10934	5.91	188.76	-2.09
212	SLV 4	1655	-16	10934	5.91	188.76	-2.09
212	SLV 5	834	33	7376	-7.26	88.91	5.41
212	SLV 6	834	33	7376	-7.26	88.91	5.41
212	SLV 7	446	-38	8429	10.03	55.33	-5.61
212	SLV 8	446	-38	8429	10.03	55.33	-5.61
212	SLV 9	-86	36	4914	-8.92	-15.38	5.7
212	SLV 10	-86	36	4914	-8.92	-15.38	5.7
212	SLV 11	-474	-35	5966	8.38	-48.96	-5.32
212	SLV 12	-474	-35	5966	8.38	-48.96	-5.32
212	SLV 13	-1295	14	2409	-4.8	-148.81	2.19
212	SLV 14	-1295	14	2409	-4.8	-148.81	2.19
212	SLV 15	-1411	-7	2725	0.39	-158.88	-1.12
212	SLV 16	-1411	-7	2725	0.39	-158.88	-1.12
213	SLU 1	-243	-1	6216	0.29	-0.77	0
213	SLU 2	-205	-1	6031	0.52	0.54	-0.01
213	SLU 3	-278	-1	6380	0.31	-2.23	0
213	SLU 4	-255	-1	6269	0.45	-1.45	-0.01
213	SLU 5	-231	-1	6133	0.54	-0.62	-0.01
213	SLU 6	-305	-1	6482	0.32	-3.39	0
213	SLU 7	-282	-1	6371	0.46	-2.61	-0.01
213	SLU 8	-296	-1	6420	0.32	-3.08	0
213	SLU 9	-273	-1	6309	0.46	-2.3	-0.01
213	SLU 10	-305	-1	7147	0.63	-2.15	-0.02
213	SLU 11	-379	-1	7496	0.41	-4.92	0
213	SLU 12	-356	-1	7385	0.55	-4.14	-0.01
213	SLU 13	-332	-1	7249	0.64	-3.31	-0.02
213	SLU 14	-405	-1	7598	0.43	-6.08	0
213	SLU 15	-382	-1	7487	0.57	-5.29	-0.01
213	SLU 16	-397	-1	7536	0.43	-5.77	0
213	SLU 17	-374	-1	7425	0.57	-4.99	-0.01
213	SLU 18	-387	-1	7810	0.44	-4.61	-0.01
213	SLU 19	-364	-1	7699	0.58	-3.82	-0.01
213	SLU 20	-413	-1	7912	0.45	-5.77	-0.01
213	SLU 21	-390	-1	7801	0.6	-4.98	-0.01
213	SLU 22	-340	-1	7214	0.37	-3.52	0
213	SLU 23	-301	-1	7029	0.6	-2.21	-0.02
213	SLU 24	-375	-1	7378	0.39	-4.98	0
213	SLU 25	-352	-1	7267	0.53	-4.2	-0.01
213	SLU 26	-328	-1	7131	0.62	-3.37	-0.02
213	SLU 27	-401	-1	7480	0.4	-6.14	0

Nodo	Cont.	Reazione a traslazione			Reazione a rotazione		
Ind.	N.br.	x	y	z	x	y	z
213	SLU 28	-378	-1	7369	0.54	-5.35	-0.01
213	SLU 29	-392	-1	7418	0.4	-5.83	0
213	SLU 30	-369	-1	7307	0.54	-5.05	-0.01
213	SLU 31	-402	-1	8145	0.71	-4.9	-0.02
213	SLU 32	-475	-1	8494	0.49	-7.67	-0.01
213	SLU 33	-452	-1	8382	0.63	-6.88	-0.01
213	SLU 34	-428	-1	8247	0.72	-6.05	-0.02
213	SLU 35	-501	-1	8596	0.5	-8.83	-0.01
213	SLU 36	-478	-1	8484	0.65	-8.04	-0.01
213	SLU 37	-493	-1	8534	0.5	-8.52	-0.01
213	SLU 38	-470	-1	8423	0.64	-7.74	-0.01
213	SLU 39	-483	-1	8808	0.52	-7.36	-0.01
213	SLU 40	-460	-1	8697	0.66	-6.57	-0.01
213	SLU 41	-509	-1	8910	0.53	-8.51	-0.01
213	SLU 42	-486	-1	8799	0.67	-7.73	-0.01
213	SLU 43	-283	-1	7739	0.35	-0.06	0
213	SLU 44	-245	-1	7554	0.58	1.25	-0.01
213	SLU 45	-318	-1	7903	0.37	-1.52	0
213	SLU 46	-295	-1	7792	0.51	-0.74	-0.01
213	SLU 47	-271	-1	7656	0.6	0.09	-0.01
213	SLU 48	-345	-1	8005	0.38	-2.68	0
213	SLU 49	-322	-1	7894	0.52	-1.89	-0.01
213	SLU 50	-336	-1	7943	0.38	-2.37	0
213	SLU 51	-313	-1	7832	0.52	-1.59	-0.01
213	SLU 52	-345	-1	8670	0.69	-1.44	-0.02
213	SLU 53	-419	-1	9019	0.47	-4.21	0
213	SLU 54	-396	-1	8908	0.61	-3.42	-0.01
213	SLU 55	-372	-1	8772	0.7	-2.59	-0.02
213	SLU 56	-445	-1	9121	0.49	-5.37	-0.01
213	SLU 57	-422	-1	9010	0.63	-4.58	-0.01
213	SLU 58	-437	-1	9059	0.48	-5.06	-0.01
213	SLU 59	-414	-1	8948	0.63	-4.28	-0.01
213	SLU 60	-427	-1	9333	0.5	-3.9	-0.01
213	SLU 61	-404	-1	9222	0.64	-3.11	-0.01
213	SLU 62	-453	-1	9435	0.51	-5.05	-0.01
213	SLU 63	-430	-1	9324	0.66	-4.27	-0.01
213	SLU 64	-379	-1	8737	0.43	-2.81	0
213	SLU 65	-341	-1	8552	0.66	-1.5	-0.02
213	SLU 66	-415	-1	8901	0.45	-4.27	0
213	SLU 67	-392	-1	8789	0.59	-3.48	-0.01
213	SLU 68	-368	-1	8654	0.68	-2.66	-0.02
213	SLU 69	-441	-1	9003	0.46	-5.43	0
213	SLU 70	-418	-1	8891	0.6	-4.64	-0.01
213	SLU 71	-432	-1	8941	0.46	-5.12	0
213	SLU 72	-409	-1	8830	0.6	-4.34	-0.01
213	SLU 73	-442	-1	9667	0.77	-4.18	-0.02
213	SLU 74	-515	-1	10017	0.55	-6.96	-0.01
213	SLU 75	-492	-1	9905	0.69	-6.17	-0.01
213	SLU 76	-468	-1	9769	0.78	-5.34	-0.02
213	SLU 77	-541	-1	10118	0.56	-8.11	-0.01
213	SLU 78	-518	-1	10007	0.71	-7.33	-0.01
213	SLU 79	-533	-1	10057	0.56	-7.81	-0.01
213	SLU 80	-510	-1	9946	0.7	-7.02	-0.01
213	SLU 81	-523	-1	10331	0.58	-6.64	-0.01
213	SLU 82	-500	-1	10220	0.72	-5.86	-0.01
213	SLU 83	-549	-1	10433	0.59	-7.8	-0.01
213	SLU 84	-526	-1	10322	0.73	-7.02	-0.01
213	SLE RA 1	-271	-1	6501	0.31	-1.55	0
213	SLE RA 2	-245	-1	6378	0.47	-0.68	-0.01
213	SLE RA 3	-294	-1	6611	0.32	-2.53	0
213	SLE RA 4	-279	-1	6536	0.42	-2.01	-0.01
213	SLE RA 5	-263	-1	6446	0.48	-1.45	-0.01
213	SLE RA 6	-312	-1	6679	0.33	-3.3	0
213	SLE RA 7	-296	-1	6604	0.43	-2.78	-0.01
213	SLE RA 8	-306	-1	6637	0.33	-3.1	0
213	SLE RA 9	-291	-1	6563	0.43	-2.57	-0.01
213	SLE RA 10	-312	-1	7122	0.54	-2.47	-0.01
213	SLE RA 11	-361	-1	7354	0.39	-4.32	0
213	SLE RA 12	-346	-1	7280	0.49	-3.8	-0.01
213	SLE RA 13	-330	-1	7190	0.55	-3.25	-0.01
213	SLE RA 14	-379	-1	7422	0.4	-5.09	0
213	SLE RA 15	-363	-1	7348	0.5	-4.57	-0.01
213	SLE RA 16	-373	-1	7381	0.4	-4.89	0
213	SLE RA 17	-358	-1	7307	0.5	-4.37	-0.01
213	SLE RA 18	-366	-1	7564	0.41	-4.11	0
213	SLE RA 19	-351	-1	7490	0.51	-3.59	-0.01
213	SLE RA 20	-384	-1	7632	0.42	-4.89	-0.01
213	SLE RA 21	-369	-1	7558	0.52	-4.36	-0.01
213	SLE FR 1	-271	-1	6501	0.31	-1.55	0
213	SLE FR 2	-266	-1	6477	0.34	-1.38	0
213	SLE FR 3	-278	-1	6529	0.32	-1.86	0
213	SLE FR 4	-294	-1	6796	0.37	-2.15	-0.01
213	SLE FR 5	-307	-1	6847	0.35	-2.63	0
213	SLE FR 6	-319	-1	7033	0.36	-2.83	0
213	SLE QP 1	-271	-1	6501	0.31	-1.55	0
213	SLE QP 2	-299	-1	6820	0.34	-2.32	0
213	SLD 1	960	1	7740	-3.16	65.45	0.18
213	SLD 2	960	1	7740	-3.16	65.45	0.18
213	SLD 3	866	-8	7872	7.48	61.16	-0.28
213	SLD 4	866	-8	7872	7.48	61.16	-0.28
213	SLD 5	221	13	6896	-16.85	24.52	0.75

Nodo	Cont.	Reazione a traslazione			Reazione a rotazione		
Ind.	N.br.	x	y	z	x	y	z
213	SLD 6	221	13	6896	-16.85	24.52	0.75
213	SLD 7	-92	-16	7336	18.63	10.21	-0.79
213	SLD 8	-92	-16	7336	18.63	10.21	-0.79
213	SLD 9	-507	14	6304	-17.94	-14.86	0.78
213	SLD 10	-507	14	6304	-17.94	-14.86	0.78
213	SLD 11	-820	-14	6745	17.54	-29.16	-0.76
213	SLD 12	-820	-14	6745	17.54	-29.16	-0.76
213	SLD 13	-1465	6	5768	-6.8	-65.8	0.28
213	SLD 14	-1465	6	5768	-6.8	-65.8	0.28
213	SLD 15	-1559	-2	5901	3.85	-70.09	-0.19
213	SLD 16	-1559	-2	5901	3.85	-70.09	-0.19
213	SLV 1	2564	4	8909	-8.78	151.73	0.47
213	SLV 2	2564	4	8909	-8.78	151.73	0.47
213	SLV 3	2343	-18	9236	18.42	141.65	-0.72
213	SLV 4	2343	-18	9236	18.42	141.65	-0.72
213	SLV 5	894	34	6950	-43.64	59.18	1.93
213	SLV 6	894	34	6950	-43.64	59.18	1.93
213	SLV 7	158	-39	8042	47.01	25.58	-2.01
213	SLV 8	158	-39	8042	47.01	25.58	-2.01
213	SLV 9	-757	38	5599	-46.33	-30.22	2.01
213	SLV 10	-757	38	5599	-46.33	-30.22	2.01
213	SLV 11	-1493	-35	6690	44.33	-63.83	-1.94
213	SLV 12	-1493	-35	6690	44.33	-63.83	-1.94
213	SLV 13	-2942	17	4404	-17.73	-146.29	0.71
213	SLV 14	-2942	17	4404	-17.73	-146.29	0.71
213	SLV 15	-3163	-5	4732	9.46	-156.37	-0.47
213	SLV 16	-3163	-5	4732	9.46	-156.37	-0.47
214	SLU 1	-373	0	6206	0.06	-13.77	0.01
214	SLU 2	-331	-1	6035	0.65	-12.14	0
214	SLU 3	-416	0	6377	0.07	-15.66	0.01
214	SLU 4	-391	0	6274	0.42	-14.68	0
214	SLU 5	-363	-1	6143	0.65	-13.58	0
214	SLU 6	-448	0	6485	0.08	-17.1	0.01
214	SLU 7	-423	0	6382	0.43	-16.13	0
214	SLU 8	-437	0	6423	0.08	-16.66	0.01
214	SLU 9	-412	0	6320	0.43	-15.68	0
214	SLU 10	-463	-1	7140	0.69	-17.4	0
214	SLU 11	-548	0	7482	0.11	-20.92	0.01
214	SLU 12	-523	-1	7379	0.46	-19.94	0
214	SLU 13	-495	-1	7248	0.7	-18.84	0
214	SLU 14	-580	0	7590	0.12	-22.36	0.01
214	SLU 15	-555	-1	7487	0.47	-21.38	0
214	SLU 16	-569	0	7528	0.12	-21.91	0.01
214	SLU 17	-544	-1	7425	0.47	-20.93	0
214	SLU 18	-562	0	7785	0.12	-21.28	0.01
214	SLU 19	-537	-1	7682	0.47	-20.3	0
214	SLU 20	-594	0	7893	0.13	-22.72	0.01
214	SLU 21	-569	-1	7790	0.48	-21.75	0
214	SLU 22	-498	0	7197	0.09	-18.81	0.01
214	SLU 23	-456	-1	7026	0.67	-17.18	0
214	SLU 24	-541	0	7368	0.09	-20.7	0.01
214	SLU 25	-516	-1	7265	0.44	-19.73	0
214	SLU 26	-488	-1	7134	0.68	-18.62	0
214	SLU 27	-573	0	7476	0.1	-22.15	0.01
214	SLU 28	-547	-1	7373	0.45	-21.17	0
214	SLU 29	-562	0	7414	0.1	-21.7	0.01
214	SLU 30	-537	-1	7311	0.45	-20.72	0
214	SLU 31	-588	-1	8131	0.71	-22.44	0
214	SLU 32	-673	0	8473	0.13	-25.96	0.01
214	SLU 33	-647	-1	8370	0.48	-24.98	0
214	SLU 34	-620	-1	8239	0.72	-23.88	0
214	SLU 35	-705	0	8581	0.14	-27.4	0.01
214	SLU 36	-679	-1	8478	0.49	-26.43	0
214	SLU 37	-694	0	8519	0.14	-26.96	0.01
214	SLU 38	-669	-1	8416	0.49	-25.98	0
214	SLU 39	-687	0	8776	0.15	-26.32	0.01
214	SLU 40	-662	-1	8673	0.5	-25.35	0
214	SLU 41	-719	0	8884	0.15	-27.77	0.01
214	SLU 42	-693	-1	8781	0.5	-26.79	0
214	SLU 43	-443	0	7728	0.07	-16.17	0.01
214	SLU 44	-400	-1	7557	0.66	-14.54	0
214	SLU 45	-485	0	7899	0.08	-18.06	0.01
214	SLU 46	-460	-1	7796	0.43	-17.09	0
214	SLU 47	-432	-1	7665	0.66	-15.98	0
214	SLU 48	-517	0	8007	0.09	-19.51	0.01
214	SLU 49	-492	-1	7904	0.44	-18.53	0
214	SLU 50	-507	0	7945	0.09	-19.06	0.01
214	SLU 51	-481	-1	7842	0.44	-18.08	0
214	SLU 52	-532	-1	8662	0.7	-19.8	0
214	SLU 53	-617	-1	9004	0.12	-23.32	0.01
214	SLU 54	-592	-1	8901	0.47	-22.34	0
214	SLU 55	-564	-1	8770	0.71	-21.24	0
214	SLU 56	-649	-1	9112	0.13	-24.76	0.01
214	SLU 57	-624	-1	9009	0.48	-23.78	0
214	SLU 58	-639	-1	9050	0.13	-24.32	0.01
214	SLU 59	-613	-1	8947	0.48	-23.34	0
214	SLU 60	-631	-1	9307	0.13	-23.68	0.01
214	SLU 61	-606	-1	9204	0.48	-22.71	0
214	SLU 62	-663	-1	9415	0.14	-25.13	0.01
214	SLU 63	-638	-1	9312	0.49	-24.15	0
214	SLU 64	-568	0	8719	0.1	-21.22	0.01

Nodo	Cont.	Reazione a traslazione			Reazione a rotazione		
Ind.	N.br.	x	y	z	x	y	z
214	SLU 65	-525	-1	8548	0.68	-19.59	0
214	SLU 66	-610	0	8890	0.1	-23.11	0.01
214	SLU 67	-585	-1	8787	0.45	-22.13	0
214	SLU 68	-557	-1	8656	0.69	-21.03	0
214	SLU 69	-642	-1	8998	0.11	-24.55	0.01
214	SLU 70	-617	-1	8895	0.46	-23.57	0
214	SLU 71	-632	0	8936	0.11	-24.1	0.01
214	SLU 72	-606	-1	8833	0.46	-23.12	0
214	SLU 73	-657	-1	9653	0.72	-24.84	0
214	SLU 74	-742	-1	9995	0.14	-28.36	0.01
214	SLU 75	-717	-1	9892	0.49	-27.39	0.01
214	SLU 76	-689	-1	9761	0.73	-26.28	0
214	SLU 77	-774	-1	10103	0.15	-29.81	0.01
214	SLU 78	-749	-1	10000	0.5	-28.83	0.01
214	SLU 79	-764	-1	10041	0.15	-29.36	0.01
214	SLU 80	-738	-1	9938	0.5	-28.38	0.01
214	SLU 81	-756	-1	10298	0.16	-28.73	0.01
214	SLU 82	-731	-1	10195	0.51	-27.75	0.01
214	SLU 83	-788	-1	10406	0.16	-30.17	0.01
214	SLU 84	-763	-1	10303	0.51	-29.19	0.01
214	SLE RA 1	-409	0	6489	0.07	-15.21	0.01
214	SLE RA 2	-381	0	6375	0.46	-14.12	0
214	SLE RA 3	-438	0	6603	0.07	-16.47	0.01
214	SLE RA 4	-421	0	6535	0.31	-15.82	0
214	SLE RA 5	-402	0	6447	0.46	-15.09	0
214	SLE RA 6	-459	0	6675	0.08	-17.43	0.01
214	SLE RA 7	-442	0	6607	0.31	-16.78	0
214	SLE RA 8	-452	0	6634	0.08	-17.14	0.01
214	SLE RA 9	-435	0	6565	0.31	-16.48	0
214	SLE RA 10	-469	-1	7112	0.49	-17.63	0
214	SLE RA 11	-526	0	7340	0.1	-19.98	0.01
214	SLE RA 12	-509	0	7271	0.33	-19.33	0
214	SLE RA 13	-490	-1	7184	0.49	-18.59	0
214	SLE RA 14	-547	0	7412	0.11	-20.94	0.01
214	SLE RA 15	-530	0	7343	0.34	-20.29	0
214	SLE RA 16	-540	0	7370	0.11	-20.64	0.01
214	SLE RA 17	-523	0	7302	0.34	-19.99	0
214	SLE RA 18	-535	0	7542	0.11	-20.22	0.01
214	SLE RA 19	-518	0	7473	0.34	-19.57	0
214	SLE RA 20	-556	0	7614	0.11	-21.18	0.01
214	SLE RA 21	-539	0	7545	0.35	-20.53	0
214	SLE FR 1	-409	0	6489	0.07	-15.21	0.01
214	SLE FR 2	-404	0	6467	0.15	-15	0.01
214	SLE FR 3	-418	0	6518	0.07	-15.6	0.01
214	SLE FR 4	-441	0	6782	0.16	-16.5	0.01
214	SLE FR 5	-455	0	6834	0.08	-17.1	0.01
214	SLE FR 6	-472	0	7016	0.09	-17.72	0.01
214	SLE QP 1	-409	0	6489	0.07	-15.21	0.01
214	SLE QP 2	-447	0	6805	0.08	-16.71	0.01
214	SLD 1	1034	5	6164	-6.97	54.65	0.15
214	SLD 2	1034	5	6164	-6.97	54.65	0.15
214	SLD 3	925	-12	6284	12.21	49.91	-0.07
214	SLD 4	925	-12	6284	12.21	49.91	-0.07
214	SLD 5	162	27	6429	-31.12	11.88	0.38
214	SLD 6	162	27	6429	-31.12	11.88	0.38
214	SLD 7	-200	-29	6832	32.81	-3.92	-0.35
214	SLD 8	-200	-29	6832	32.81	-3.92	-0.35
214	SLD 9	-694	29	6778	-32.65	-29.51	0.36
214	SLD 10	-694	29	6778	-32.65	-29.51	0.36
214	SLD 11	-1056	-28	7181	31.29	-45.31	-0.37
214	SLD 12	-1056	-28	7181	31.29	-45.31	-0.37
214	SLD 13	-1819	11	7326	-12.05	-83.34	0.08
214	SLD 14	-1819	11	7326	-12.05	-83.34	0.08
214	SLD 15	-1928	-6	7447	7.13	-88.08	-0.13
214	SLD 16	-1928	-6	7447	7.13	-88.08	-0.13
214	SLV 1	2920	14	5315	-18.06	145.5	0.37
214	SLV 2	2920	14	5315	-18.06	145.5	0.37
214	SLV 3	2664	-29	5615	31.08	134.36	-0.19
214	SLV 4	2664	-29	5615	31.08	134.36	-0.19
214	SLV 5	951	69	5904	-79.89	48.85	0.96
214	SLV 6	951	69	5904	-79.89	48.85	0.96
214	SLV 7	99	-75	6902	83.9	11.7	-0.9
214	SLV 8	99	-75	6902	83.9	11.7	-0.9
214	SLV 9	-992	74	6708	-83.74	-45.13	0.92
214	SLV 10	-992	74	6708	-83.74	-45.13	0.92
214	SLV 11	-1845	-70	7706	80.05	-82.28	-0.95
214	SLV 12	-1845	-70	7706	80.05	-82.28	-0.95
214	SLV 13	-3558	29	7995	-30.91	-167.79	0.21
214	SLV 14	-3558	29	7995	-30.91	-167.79	0.21
214	SLV 15	-3814	-14	8295	18.23	-178.93	-0.35
214	SLV 16	-3814	-14	8295	18.23	-178.93	-0.35
215	SLU 1	-465	0	6163	-0.15	-21.59	0.01
215	SLU 2	-423	-1	6008	0.74	-19.77	0
215	SLU 3	-511	0	6336	-0.15	-23.77	0.01
215	SLU 4	-485	0	6242	0.38	-22.67	0.01
215	SLU 5	-457	-1	6119	0.74	-21.4	0
215	SLU 6	-545	0	6447	-0.15	-25.4	0.01
215	SLU 7	-519	0	6353	0.39	-24.31	0.01
215	SLU 8	-533	0	6385	-0.14	-24.86	0.01
215	SLU 9	-508	0	6292	0.39	-23.76	0.01
215	SLU 10	-577	-1	7088	0.74	-26.88	0

Nodo	Cont.	Reazione a traslazione			Reazione a rotazione		
Ind.	N.br.	x	y	z	x	y	z
215	SLU 11	-664	0	7415	-0.15	-30.88	0.02
215	SLU 12	-639	0	7322	0.38	-29.79	0.01
215	SLU 13	-610	-1	7198	0.74	-28.52	0.01
215	SLU 14	-698	0	7526	-0.15	-32.52	0.02
215	SLU 15	-672	0	7433	0.38	-31.42	0.01
215	SLU 16	-686	0	7465	-0.15	-31.97	0.02
215	SLU 17	-661	0	7371	0.39	-30.88	0.01
215	SLU 18	-684	0	7705	-0.15	-31.76	0.02
215	SLU 19	-659	0	7612	0.38	-30.66	0.01
215	SLU 20	-718	0	7816	-0.15	-33.39	0.02
215	SLU 21	-693	0	7723	0.38	-32.3	0.01
215	SLU 22	-609	0	7134	-0.16	-28.27	0.02
215	SLU 23	-566	-1	6979	0.73	-26.45	0
215	SLU 24	-654	0	7307	-0.16	-30.45	0.02
215	SLU 25	-629	0	7214	0.37	-29.35	0.01
215	SLU 26	-600	-1	7090	0.73	-28.08	0
215	SLU 27	-688	0	7418	-0.16	-32.08	0.02
215	SLU 28	-662	0	7325	0.37	-30.99	0.01
215	SLU 29	-676	0	7356	-0.16	-31.54	0.02
215	SLU 30	-651	0	7263	0.37	-30.44	0.01
215	SLU 31	-720	-1	8059	0.72	-33.56	0.01
215	SLU 32	-807	0	8387	-0.17	-37.56	0.02
215	SLU 33	-782	0	8294	0.36	-36.47	0.01
215	SLU 34	-753	-1	8170	0.72	-35.2	0.01
215	SLU 35	-841	0	8498	-0.17	-39.2	0.02
215	SLU 36	-816	0	8405	0.37	-38.1	0.01
215	SLU 37	-829	0	8436	-0.16	-38.65	0.02
215	SLU 38	-804	0	8343	0.37	-37.56	0.01
215	SLU 39	-827	0	8677	-0.17	-38.44	0.02
215	SLU 40	-802	0	8584	0.36	-37.34	0.01
215	SLU 41	-861	0	8788	-0.17	-40.07	0.02
215	SLU 42	-836	0	8695	0.37	-38.98	0.01
215	SLU 43	-556	0	7678	-0.19	-25.78	0.02
215	SLU 44	-514	-1	7523	0.7	-23.96	0
215	SLU 45	-601	0	7851	-0.19	-27.96	0.02
215	SLU 46	-576	0	7758	0.35	-26.86	0.01
215	SLU 47	-548	-1	7634	0.71	-25.59	0
215	SLU 48	-635	0	7962	-0.19	-29.59	0.02
215	SLU 49	-610	0	7869	0.35	-28.49	0.01
215	SLU 50	-624	0	7900	-0.18	-29.04	0.02
215	SLU 51	-598	0	7807	0.35	-27.95	0.01
215	SLU 52	-667	-1	8603	0.7	-31.07	0.01
215	SLU 53	-754	0	8931	-0.19	-35.07	0.02
215	SLU 54	-729	0	8838	0.34	-33.98	0.01
215	SLU 55	-701	-1	8714	0.7	-32.7	0.01
215	SLU 56	-788	0	9042	-0.19	-36.7	0.02
215	SLU 57	-763	0	8949	0.34	-35.61	0.01
215	SLU 58	-777	0	8980	-0.19	-36.16	0.02
215	SLU 59	-752	0	8887	0.35	-35.07	0.01
215	SLU 60	-775	0	9221	-0.19	-35.95	0.02
215	SLU 61	-750	0	9128	0.34	-34.85	0.01
215	SLU 62	-809	0	9332	-0.19	-37.58	0.02
215	SLU 63	-783	0	9239	0.34	-36.48	0.01
215	SLU 64	-699	0	8650	-0.2	-32.46	0.02
215	SLU 65	-657	-1	8495	0.69	-30.63	0.01
215	SLU 66	-744	0	8823	-0.2	-34.64	0.02
215	SLU 67	-719	0	8730	0.33	-33.54	0.01
215	SLU 68	-691	-1	8606	0.69	-32.27	0.01
215	SLU 69	-778	0	8934	-0.2	-36.27	0.02
215	SLU 70	-753	0	8841	0.33	-35.17	0.01
215	SLU 71	-767	0	8872	-0.2	-35.72	0.02
215	SLU 72	-741	0	8779	0.34	-34.63	0.01
215	SLU 73	-810	-1	9575	0.68	-37.75	0.01
215	SLU 74	-898	0	9903	-0.21	-41.75	0.02
215	SLU 75	-872	0	9810	0.32	-40.66	0.02
215	SLU 76	-844	-1	9686	0.68	-39.38	0.01
215	SLU 77	-931	0	10014	-0.21	-43.38	0.02
215	SLU 78	-906	0	9921	0.33	-42.29	0.02
215	SLU 79	-920	0	9952	-0.2	-42.84	0.02
215	SLU 80	-895	0	9859	0.33	-41.75	0.02
215	SLU 81	-918	0	10193	-0.21	-42.63	0.02
215	SLU 82	-893	0	10100	0.32	-41.53	0.02
215	SLU 83	-952	0	10304	-0.21	-44.26	0.03
215	SLU 84	-926	0	10211	0.33	-43.16	0.02
215	SLE RA 1	-506	0	6440	-0.15	-23.5	0.01
215	SLE RA 2	-478	0	6337	0.44	-22.28	0.01
215	SLE RA 3	-537	0	6556	-0.15	-24.95	0.02
215	SLE RA 4	-520	0	6494	0.2	-24.22	0.01
215	SLE RA 5	-501	0	6411	0.44	-23.37	0.01
215	SLE RA 6	-559	0	6630	-0.15	-26.04	0.02
215	SLE RA 7	-542	0	6568	0.2	-25.31	0.01
215	SLE RA 8	-551	0	6588	-0.15	-25.68	0.02
215	SLE RA 9	-535	0	6526	0.21	-24.95	0.01
215	SLE RA 10	-580	0	7057	0.44	-27.03	0.01
215	SLE RA 11	-639	0	7276	-0.16	-29.7	0.02
215	SLE RA 12	-622	0	7214	0.2	-28.97	0.01
215	SLE RA 13	-603	0	7131	0.44	-28.12	0.01
215	SLE RA 14	-661	0	7350	-0.15	-30.78	0.02
215	SLE RA 15	-644	0	7287	0.2	-30.05	0.01
215	SLE RA 16	-654	0	7308	-0.15	-30.42	0.02
215	SLE RA 17	-637	0	7246	0.2	-29.69	0.01

Nodo	Cont.	Reazione a traslazione			Reazione a rotazione		
Ind.	N.br.	x	y	z	x	y	z
215	SLE RA 18	-652	0	7469	-0.16	-30.28	0.02
215	SLE RA 19	-635	0	7407	0.2	-29.55	0.01
215	SLE RA 20	-675	0	7543	-0.15	-31.37	0.02
215	SLE RA 21	-658	0	7481	0.2	-30.64	0.01
215	SLE FR 1	-506	0	6440	-0.15	-23.5	0.01
215	SLE FR 2	-501	0	6420	-0.03	-23.26	0.01
215	SLE FR 3	-515	0	6470	-0.15	-23.94	0.01
215	SLE FR 4	-544	0	6728	-0.03	-25.29	0.01
215	SLE FR 5	-559	0	6778	-0.15	-25.97	0.02
215	SLE FR 6	-579	0	6955	-0.15	-26.89	0.02
215	SLE QP 1	-506	0	6440	-0.15	-23.5	0.01
215	SLE QP 2	-550	0	6749	-0.15	-25.53	0.02
215	SLD 1	987	9	6269	-9.9	50.02	0.15
215	SLD 2	987	9	6269	-9.9	50.02	0.15
215	SLD 3	873	-15	6371	15.64	44.78	-0.02
215	SLD 4	873	-15	6371	15.64	44.78	-0.02
215	SLD 5	84	39	6451	-41.81	5.08	0.31
215	SLD 6	84	39	6451	-41.81	5.08	0.31
215	SLD 7	-296	-41	6790	43.32	-12.39	-0.25
215	SLD 8	-296	-41	6790	43.32	-12.39	-0.25
215	SLD 9	-804	41	6708	-43.62	-38.68	0.28
215	SLD 10	-804	41	6708	-43.62	-38.68	0.28
215	SLD 11	-1184	-40	7047	41.5	-56.15	-0.28
215	SLD 12	-1184	-40	7047	41.5	-56.15	-0.28
215	SLD 13	-1973	15	7127	-15.94	-95.85	0.05
215	SLD 14	-1973	15	7127	-15.94	-95.85	0.05
215	SLD 15	-2087	-9	7228	9.6	-101.09	-0.12
215	SLD 16	-2087	-9	7228	9.6	-101.09	-0.12
215	SLV 1	2944	23	5619	-25.16	146.22	0.36
215	SLV 2	2944	23	5619	-25.16	146.22	0.36
215	SLV 3	2676	-39	5873	40.29	133.9	-0.08
215	SLV 4	2676	-39	5873	40.29	133.9	-0.08
215	SLV 5	904	101	6025	-106.93	44.68	0.78
215	SLV 6	904	101	6025	-106.93	44.68	0.78
215	SLV 7	12	-106	6871	111.25	3.61	-0.67
215	SLV 8	12	-106	6871	111.25	3.61	-0.67
215	SLV 9	-1112	105	6626	-111.56	-54.68	0.7
215	SLV 10	-1112	105	6626	-111.56	-54.68	0.7
215	SLV 11	-2004	-101	7473	106.62	-95.74	-0.75
215	SLV 12	-2004	-101	7473	106.62	-95.74	-0.75
215	SLV 13	-3776	38	7625	-40.6	-184.97	0.11
215	SLV 14	-3776	38	7625	-40.6	-184.97	0.11
215	SLV 15	-4044	-24	7878	24.86	-197.29	-0.32
215	SLV 16	-4044	-24	7878	24.86	-197.29	-0.32
216	SLU 1	-571	0	6153	-0.32	-24.85	0
216	SLU 2	-532	-1	6011	0.8	-23.14	-0.01
216	SLU 3	-618	0	6329	-0.33	-27.02	0
216	SLU 4	-595	0	6244	0.34	-25.99	-0.01
216	SLU 5	-567	-1	6125	0.8	-24.75	-0.01
216	SLU 6	-653	0	6442	-0.33	-28.63	0
216	SLU 7	-630	0	6358	0.34	-27.61	-0.01
216	SLU 8	-641	0	6380	-0.32	-28.08	0
216	SLU 9	-618	0	6296	0.35	-27.05	-0.01
216	SLU 10	-710	-1	7071	0.76	-30.77	-0.01
216	SLU 11	-796	0	7388	-0.37	-34.65	0
216	SLU 12	-773	0	7303	0.31	-33.62	-0.01
216	SLU 13	-745	-1	7185	0.76	-32.38	-0.01
216	SLU 14	-831	0	7502	-0.37	-36.26	0
216	SLU 15	-808	0	7417	0.3	-35.23	-0.01
216	SLU 16	-818	0	7440	-0.36	-35.7	0
216	SLU 17	-795	0	7355	0.31	-34.68	-0.01
216	SLU 18	-824	0	7667	-0.37	-35.74	0
216	SLU 19	-801	0	7582	0.3	-34.72	-0.01
216	SLU 20	-859	0	7780	-0.38	-37.36	0
216	SLU 21	-836	0	7696	0.3	-36.33	-0.01
216	SLU 22	-734	0	7110	-0.37	-31.95	0
216	SLU 23	-696	-1	6969	0.76	-30.24	-0.01
216	SLU 24	-782	0	7286	-0.37	-34.12	0
216	SLU 25	-759	0	7201	0.3	-33.09	-0.01
216	SLU 26	-731	-1	7083	0.75	-31.86	-0.01
216	SLU 27	-817	0	7400	-0.38	-35.74	0
216	SLU 28	-794	0	7315	0.3	-34.71	-0.01
216	SLU 29	-805	0	7338	-0.37	-35.18	0
216	SLU 30	-782	0	7253	0.3	-34.15	-0.01
216	SLU 31	-873	-1	8028	0.72	-37.87	-0.02
216	SLU 32	-959	0	8345	-0.41	-41.75	0
216	SLU 33	-936	0	8261	0.26	-40.72	-0.01
216	SLU 34	-909	-1	8142	0.72	-39.48	-0.02
216	SLU 35	-995	0	8459	-0.41	-43.36	0
216	SLU 36	-972	0	8375	0.26	-42.34	-0.01
216	SLU 37	-982	0	8397	-0.41	-42.81	0
216	SLU 38	-959	0	8313	0.26	-41.78	-0.01
216	SLU 39	-988	0	8624	-0.42	-42.85	0
216	SLU 40	-965	0	8539	0.25	-41.82	-0.01
216	SLU 41	-1023	0	8738	-0.42	-44.46	0
216	SLU 42	-1000	0	8653	0.25	-43.44	-0.01
216	SLU 43	-686	0	7670	-0.4	-29.87	0
216	SLU 44	-647	-1	7529	0.72	-28.16	-0.01
216	SLU 45	-733	0	7846	-0.41	-32.04	0
216	SLU 46	-710	0	7761	0.26	-31.01	-0.01
216	SLU 47	-682	-1	7643	0.72	-29.77	-0.01

Nodo	Cont.	Reazione a traslazione			Reazione a rotazione		
Ind.	N.br.	x	y	z	x	y	z
216	SLU 48	-768	0	7960	-0.41	-33.65	0
216	SLU 49	-745	0	7875	0.26	-32.63	-0.01
216	SLU 50	-756	0	7898	-0.41	-33.1	0
216	SLU 51	-733	0	7813	0.27	-32.07	-0.01
216	SLU 52	-825	-1	8589	0.68	-35.78	-0.01
216	SLU 53	-911	0	8906	-0.45	-39.66	0
216	SLU 54	-888	0	8821	0.23	-38.64	-0.01
216	SLU 55	-860	-1	8703	0.68	-37.4	-0.01
216	SLU 56	-946	0	9020	-0.45	-41.28	0
216	SLU 57	-923	0	8935	0.22	-40.25	-0.01
216	SLU 58	-933	0	8958	-0.44	-40.72	0
216	SLU 59	-910	0	8873	0.23	-39.7	-0.01
216	SLU 60	-939	0	9184	-0.46	-40.76	0
216	SLU 61	-916	0	9099	0.22	-39.74	-0.01
216	SLU 62	-974	0	9298	-0.46	-42.38	0
216	SLU 63	-951	0	9213	0.22	-41.35	-0.01
216	SLU 64	-849	0	8628	-0.45	-36.97	0
216	SLU 65	-811	-1	8486	0.67	-35.26	-0.01
216	SLU 66	-897	0	8803	-0.45	-39.14	0
216	SLU 67	-874	0	8719	0.22	-38.11	-0.01
216	SLU 68	-846	-1	8600	0.67	-36.87	-0.01
216	SLU 69	-932	0	8917	-0.46	-40.75	0
216	SLU 70	-909	0	8833	0.22	-39.73	-0.01
216	SLU 71	-920	0	8855	-0.45	-40.2	0
216	SLU 72	-897	0	8771	0.22	-39.17	-0.01
216	SLU 73	-988	-1	9546	0.64	-42.89	-0.02
216	SLU 74	-1074	0	9863	-0.49	-46.77	0
216	SLU 75	-1051	0	9778	0.18	-45.74	-0.01
216	SLU 76	-1024	-1	9660	0.63	-44.5	-0.02
216	SLU 77	-1110	0	9977	-0.49	-48.38	0
216	SLU 78	-1087	0	9892	0.18	-47.36	-0.01
216	SLU 79	-1097	0	9915	-0.49	-47.83	0
216	SLU 80	-1074	0	9830	0.18	-46.8	-0.01
216	SLU 81	-1103	0	10141	-0.5	-47.87	0
216	SLU 82	-1080	0	10057	0.17	-46.84	-0.01
216	SLU 83	-1138	0	10255	-0.5	-49.48	0
216	SLU 84	-1115	0	10170	0.17	-48.45	-0.01
216	SLE RA 1	-617	0	6426	-0.33	-26.88	0
216	SLE RA 2	-592	0	6332	0.41	-25.74	-0.01
216	SLE RA 3	-649	0	6543	-0.34	-28.32	0
216	SLE RA 4	-634	0	6487	0.11	-27.64	-0.01
216	SLE RA 5	-615	0	6408	0.41	-26.81	-0.01
216	SLE RA 6	-673	0	6619	-0.34	-29.4	0
216	SLE RA 7	-657	0	6563	0.11	-28.72	-0.01
216	SLE RA 8	-664	0	6578	-0.34	-29.03	0
216	SLE RA 9	-649	0	6522	0.11	-28.35	-0.01
216	SLE RA 10	-710	0	7038	0.39	-30.82	-0.01
216	SLE RA 11	-767	0	7250	-0.36	-33.41	0
216	SLE RA 12	-752	0	7193	0.08	-32.72	-0.01
216	SLE RA 13	-733	0	7114	0.39	-31.9	-0.01
216	SLE RA 14	-791	0	7326	-0.37	-34.48	0
216	SLE RA 15	-775	0	7269	0.08	-33.8	-0.01
216	SLE RA 16	-783	0	7285	-0.36	-34.11	0
216	SLE RA 17	-767	0	7228	0.09	-33.43	-0.01
216	SLE RA 18	-786	0	7435	-0.37	-34.14	0
216	SLE RA 19	-771	0	7379	0.08	-33.46	-0.01
216	SLE RA 20	-810	0	7511	-0.37	-35.22	0
216	SLE RA 21	-794	0	7455	0.08	-34.53	-0.01
216	SLE FR 1	-617	0	6426	-0.33	-26.88	0
216	SLE FR 2	-612	0	6407	-0.18	-26.65	0
216	SLE FR 3	-627	0	6457	-0.33	-27.31	0
216	SLE FR 4	-663	0	6710	-0.19	-28.83	0
216	SLE FR 5	-677	0	6759	-0.34	-29.49	0
216	SLE FR 6	-702	0	6931	-0.35	-30.51	0
216	SLE QP 1	-617	0	6426	-0.33	-26.88	0
216	SLE QP 2	-668	0	6729	-0.34	-29.06	0
216	SLD 1	893	11	6241	-11.55	43.15	0.18
216	SLD 2	893	11	6241	-11.55	43.15	0.18
216	SLD 3	779	-16	6325	17.5	38.15	-0.27
216	SLD 4	779	-16	6325	17.5	38.15	-0.27
216	SLD 5	-27	45	6457	-47.78	0.19	0.73
216	SLD 6	-27	45	6457	-47.78	0.19	0.73
216	SLD 7	-407	-46	6734	49.08	-16.48	-0.76
216	SLD 8	-407	-46	6734	49.08	-16.48	-0.76
216	SLD 9	-929	46	6724	-49.77	-41.63	0.76
216	SLD 10	-929	46	6724	-49.77	-41.63	0.76
216	SLD 11	-1309	-44	7001	47.09	-58.3	-0.73
216	SLD 12	-1309	-44	7001	47.09	-58.3	-0.73
216	SLD 13	-2115	17	7133	-18.19	-96.26	0.27
216	SLD 14	-2115	17	7133	-18.19	-96.26	0.27
216	SLD 15	-2229	-11	7217	10.87	-101.26	-0.18
216	SLD 16	-2229	-11	7217	10.87	-101.26	-0.18
216	SLV 1	2880	28	5576	-29.08	135.09	0.45
216	SLV 2	2880	28	5576	-29.08	135.09	0.45
216	SLV 3	2612	-42	5786	45.41	123.33	-0.69
216	SLV 4	2612	-42	5786	45.41	123.33	-0.69
216	SLV 5	802	114	6064	-121.94	38.02	1.87
216	SLV 6	802	114	6064	-121.94	38.02	1.87
216	SLV 7	-90	-118	6765	126.36	-1.17	-1.95
216	SLV 8	-90	-118	6765	126.36	-1.17	-1.95
216	SLV 9	-1246	118	6693	-127.05	-56.94	1.94

Nodo	Cont.	Reazione a traslazione			Reazione a rotazione		
Ind.	N.br.	x	y	z	x	y	z
216	SLV 10	-1246	118	6693	-127.05	-56.94	1.94
216	SLV 11	-2138	-114	7394	121.25	-96.13	-1.87
216	SLV 12	-2138	-114	7394	121.25	-96.13	-1.87
216	SLV 13	-3948	42	7672	-46.1	-181.44	0.69
216	SLV 14	-3948	42	7672	-46.1	-181.44	0.69
216	SLV 15	-4216	-28	7882	28.39	-193.2	-0.45
216	SLV 16	-4216	-28	7882	28.39	-193.2	-0.45
217	SLU 1	-595	0	6167	-0.53	-28.94	-0.01
217	SLU 2	-558	-1	6034	0.84	-27.32	0
217	SLU 3	-643	0	6346	-0.55	-31.19	-0.01
217	SLU 4	-621	0	6266	0.28	-30.22	0
217	SLU 5	-594	-1	6151	0.83	-28.98	0
217	SLU 6	-678	0	6463	-0.55	-32.85	-0.01
217	SLU 7	-656	0	6383	0.27	-31.88	0
217	SLU 8	-666	0	6401	-0.55	-32.26	-0.01
217	SLU 9	-644	0	6321	0.28	-31.29	0
217	SLU 10	-740	-1	7078	0.77	-35.89	0
217	SLU 11	-825	0	7390	-0.62	-39.76	-0.01
217	SLU 12	-803	0	7310	0.2	-38.79	-0.01
217	SLU 13	-776	-1	7195	0.76	-37.55	0
217	SLU 14	-860	0	7507	-0.63	-41.42	-0.01
217	SLU 15	-838	0	7427	0.2	-40.45	-0.01
217	SLU 16	-848	0	7444	-0.62	-40.83	-0.01
217	SLU 17	-826	0	7365	0.21	-39.86	-0.01
217	SLU 18	-855	0	7658	-0.64	-41.18	-0.01
217	SLU 19	-833	0	7578	0.19	-40.21	-0.01
217	SLU 20	-891	0	7775	-0.64	-42.84	-0.01
217	SLU 21	-868	0	7695	0.18	-41.87	-0.01
217	SLU 22	-763	0	7114	-0.61	-36.85	-0.01
217	SLU 23	-726	-1	6981	0.77	-35.23	0
217	SLU 24	-811	0	7293	-0.62	-39.1	-0.01
217	SLU 25	-789	0	7213	0.2	-38.13	-0.01
217	SLU 26	-761	-1	7097	0.76	-36.89	0
217	SLU 27	-846	0	7410	-0.63	-40.76	-0.01
217	SLU 28	-824	0	7330	0.19	-39.79	-0.01
217	SLU 29	-833	0	7347	-0.62	-40.17	-0.01
217	SLU 30	-811	0	7267	0.2	-39.2	-0.01
217	SLU 31	-908	0	8025	0.69	-43.8	0
217	SLU 32	-993	0	8337	-0.7	-47.67	-0.01
217	SLU 33	-971	0	8257	0.13	-46.7	-0.01
217	SLU 34	-943	0	8141	0.69	-45.46	0
217	SLU 35	-1028	0	8454	-0.7	-49.33	-0.02
217	SLU 36	-1006	0	8374	0.12	-48.36	-0.01
217	SLU 37	-1015	0	8391	-0.7	-48.74	-0.02
217	SLU 38	-993	0	8311	0.13	-47.77	-0.01
217	SLU 39	-1023	0	8605	-0.71	-49.09	-0.02
217	SLU 40	-1001	0	8525	0.11	-48.12	-0.01
217	SLU 41	-1058	0	8722	-0.72	-50.75	-0.02
217	SLU 42	-1036	0	8642	0.11	-49.78	-0.01
217	SLU 43	-716	0	7693	-0.67	-34.91	-0.01
217	SLU 44	-679	-1	7559	0.71	-33.29	0
217	SLU 45	-764	0	7872	-0.68	-37.16	-0.02
217	SLU 46	-742	0	7792	0.14	-36.19	-0.01
217	SLU 47	-715	0	7676	0.7	-34.95	0
217	SLU 48	-799	0	7988	-0.69	-38.82	-0.02
217	SLU 49	-777	0	7908	0.14	-37.85	-0.01
217	SLU 50	-787	0	7926	-0.68	-38.23	-0.02
217	SLU 51	-765	0	7846	0.14	-37.26	-0.01
217	SLU 52	-862	0	8603	0.63	-41.86	0
217	SLU 53	-946	0	8916	-0.75	-45.73	-0.02
217	SLU 54	-924	0	8836	0.07	-44.76	-0.01
217	SLU 55	-897	0	8720	0.63	-43.52	0
217	SLU 56	-981	0	9032	-0.76	-47.39	-0.02
217	SLU 57	-959	0	8952	0.06	-46.42	-0.01
217	SLU 58	-969	0	8970	-0.75	-46.8	-0.02
217	SLU 59	-947	0	8890	0.07	-45.83	-0.01
217	SLU 60	-976	0	9184	-0.77	-47.15	-0.02
217	SLU 61	-954	0	9104	0.05	-46.18	-0.01
217	SLU 62	-1012	0	9301	-0.78	-48.81	-0.02
217	SLU 63	-990	0	9221	0.05	-47.84	-0.01
217	SLU 64	-884	0	8639	-0.74	-42.82	-0.02
217	SLU 65	-847	0	8506	0.63	-41.2	0
217	SLU 66	-932	0	8818	-0.76	-45.07	-0.02
217	SLU 67	-910	0	8739	0.07	-44.1	-0.01
217	SLU 68	-882	0	8623	0.62	-42.86	0
217	SLU 69	-967	0	8935	-0.76	-46.73	-0.02
217	SLU 70	-945	0	8855	0.06	-45.76	-0.01
217	SLU 71	-954	0	8873	-0.76	-46.14	-0.02
217	SLU 72	-932	0	8793	0.07	-45.17	-0.01
217	SLU 73	-1029	0	9550	0.56	-49.77	0
217	SLU 74	-1114	1	9862	-0.83	-53.64	-0.02
217	SLU 75	-1092	0	9782	-0.01	-52.67	-0.01
217	SLU 76	-1064	0	9667	0.55	-51.43	0
217	SLU 77	-1149	1	9979	-0.84	-55.3	-0.02
217	SLU 78	-1127	0	9899	-0.01	-54.33	-0.01
217	SLU 79	-1137	1	9917	-0.83	-54.71	-0.02
217	SLU 80	-1114	0	9837	0	-53.74	-0.01
217	SLU 81	-1144	1	10131	-0.85	-55.06	-0.02
217	SLU 82	-1122	0	10051	-0.02	-54.09	-0.01
217	SLU 83	-1179	1	10247	-0.85	-56.72	-0.02
217	SLU 84	-1157	0	10168	-0.03	-55.75	-0.01

Nodo	Cont.	Reazione a traslazione			Reazione a rotazione		
Ind.	N.br.	x	y	z	x	y	z
217	SLE RA 1	-643	0	6438	-0.56	-31.2	-0.01
217	SLE RA 2	-619	0	6349	0.36	-30.12	0
217	SLE RA 3	-675	0	6557	-0.56	-32.7	-0.01
217	SLE RA 4	-660	0	6504	-0.01	-32.05	-0.01
217	SLE RA 5	-642	0	6427	0.36	-31.23	0
217	SLE RA 6	-698	0	6635	-0.57	-33.81	-0.01
217	SLE RA 7	-684	0	6582	-0.02	-33.16	-0.01
217	SLE RA 8	-690	0	6593	-0.56	-33.41	-0.01
217	SLE RA 9	-675	0	6540	-0.01	-32.77	-0.01
217	SLE RA 10	-740	0	7045	0.31	-35.83	0
217	SLE RA 11	-796	0	7253	-0.61	-38.41	-0.01
217	SLE RA 12	-782	0	7200	-0.06	-37.77	-0.01
217	SLE RA 13	-763	0	7123	0.31	-36.94	0
217	SLE RA 14	-820	0	7331	-0.62	-39.52	-0.01
217	SLE RA 15	-805	0	7277	-0.07	-38.87	-0.01
217	SLE RA 16	-811	0	7289	-0.61	-39.12	-0.01
217	SLE RA 17	-797	0	7236	-0.06	-38.48	-0.01
217	SLE RA 18	-816	0	7432	-0.62	-39.36	-0.01
217	SLE RA 19	-802	0	7379	-0.07	-38.71	-0.01
217	SLE RA 20	-840	0	7510	-0.63	-40.46	-0.01
217	SLE RA 21	-825	0	7456	-0.08	-39.82	-0.01
217	SLE FR 1	-643	0	6438	-0.56	-31.2	-0.01
217	SLE FR 2	-638	0	6420	-0.37	-30.98	-0.01
217	SLE FR 3	-653	0	6469	-0.56	-31.64	-0.01
217	SLE FR 4	-690	0	6718	-0.39	-33.43	-0.01
217	SLE FR 5	-705	0	6767	-0.58	-34.09	-0.01
217	SLE FR 6	-730	0	6935	-0.59	-35.28	-0.01
217	SLE QP 1	-643	0	6438	-0.56	-31.2	-0.01
217	SLE QP 2	-695	0	6736	-0.58	-33.65	-0.01
217	SLD 1	865	12	6160	-12.49	38.23	-0.18
217	SLD 2	865	12	6160	-12.49	38.23	-0.18
217	SLD 3	751	-17	6234	18.66	33.24	0.25
217	SLD 4	751	-17	6234	18.66	33.24	0.25
217	SLD 5	-55	48	6451	-51.41	-4.52	-0.71
217	SLD 6	-55	48	6451	-51.41	-4.52	-0.71
217	SLD 7	-433	-49	6697	52.45	-21.14	0.71
217	SLD 8	-433	-49	6697	52.45	-21.14	0.71
217	SLD 9	-957	50	6774	-53.6	-46.15	-0.74
217	SLD 10	-957	50	6774	-53.6	-46.15	-0.74
217	SLD 11	-1335	-47	7021	50.25	-62.77	0.69
217	SLD 12	-1335	-47	7021	50.25	-62.77	0.69
217	SLD 13	-2142	18	7238	-19.82	-100.54	-0.27
217	SLD 14	-2142	18	7238	-19.82	-100.54	-0.27
217	SLD 15	-2255	-11	7312	11.34	-105.52	0.15
217	SLD 16	-2255	-11	7312	11.34	-105.52	0.15
217	SLV 1	2851	30	5379	-31.16	129.76	-0.44
217	SLV 2	2851	30	5379	-31.16	129.76	-0.44
217	SLV 3	2585	-45	5567	48.71	118.04	0.65
217	SLV 4	2585	-45	5567	48.71	118.04	0.65
217	SLV 5	772	123	6043	-130.9	33.14	-1.8
217	SLV 6	772	123	6043	-130.9	33.14	-1.8
217	SLV 7	-115	-127	6671	135.35	-5.91	1.85
217	SLV 8	-115	-127	6671	135.35	-5.91	1.85
217	SLV 9	-1276	127	6801	-136.51	-61.39	-1.87
217	SLV 10	-1276	127	6801	-136.51	-61.39	-1.87
217	SLV 11	-2162	-122	7429	129.74	-100.43	1.78
217	SLV 12	-2162	-122	7429	129.74	-100.43	1.78
217	SLV 13	-3975	46	7905	-49.86	-185.34	-0.68
217	SLV 14	-3975	46	7905	-49.86	-185.34	-0.68
217	SLV 15	-4241	-29	8093	30.01	-197.05	0.42
217	SLV 16	-4241	-29	8093	30.01	-197.05	0.42
218	SLU 1	-754	1	6193	-0.7	-34.33	0.01
218	SLU 2	-719	-1	6066	0.8	-32.7	0
218	SLU 3	-805	1	6377	-0.72	-36.74	0.01
218	SLU 4	-784	0	6301	0.18	-35.76	0
218	SLU 5	-756	-1	6187	0.79	-34.46	0
218	SLU 6	-842	1	6498	-0.73	-38.5	0.01
218	SLU 7	-821	0	6422	0.17	-37.52	0.01
218	SLU 8	-828	1	6435	-0.72	-37.85	0.01
218	SLU 9	-807	0	6359	0.18	-36.87	0.01
218	SLU 10	-934	-1	7091	0.71	-42.36	0
218	SLU 11	-1020	1	7402	-0.81	-46.4	0.02
218	SLU 12	-999	0	7326	0.09	-45.42	0.01
218	SLU 13	-971	-1	7212	0.7	-44.12	0
218	SLU 14	-1058	1	7523	-0.82	-48.16	0.02
218	SLU 15	-1037	0	7447	0.08	-47.18	0.01
218	SLU 16	-1044	1	7460	-0.81	-47.51	0.02
218	SLU 17	-1023	0	7384	0.09	-46.53	0.01
218	SLU 18	-1061	1	7657	-0.83	-48.13	0.02
218	SLU 19	-1040	0	7581	0.07	-47.15	0.01
218	SLU 20	-1099	1	7778	-0.84	-49.89	0.02
218	SLU 21	-1078	0	7702	0.06	-48.91	0.01
218	SLU 22	-951	1	7128	-0.79	-43.21	0.01
218	SLU 23	-916	-1	7001	0.71	-41.58	0
218	SLU 24	-1002	1	7312	-0.81	-45.62	0.02
218	SLU 25	-981	0	7236	0.09	-44.64	0.01
218	SLU 26	-953	-1	7122	0.7	-43.34	0
218	SLU 27	-1039	1	7433	-0.82	-47.38	0.02
218	SLU 28	-1018	0	7357	0.08	-46.4	0.01
218	SLU 29	-1025	1	7370	-0.81	-46.73	0.02
218	SLU 30	-1004	0	7294	0.09	-45.75	0.01

Nodo	Cont.	Reazione a traslazione			Reazione a rotazione		
Ind.	N.br.	x	y	z	x	y	z
218	SLU 31	-1131	0	8026	0.61	-51.24	0
218	SLU 32	-1217	1	8337	-0.91	-55.28	0.02
218	SLU 33	-1196	0	8261	-0.01	-54.3	0.01
218	SLU 34	-1168	0	8147	0.6	-53	0
218	SLU 35	-1255	1	8458	-0.92	-57.04	0.02
218	SLU 36	-1234	0	8382	-0.02	-56.06	0.01
218	SLU 37	-1241	1	8395	-0.91	-56.39	0.02
218	SLU 38	-1220	0	8319	-0.01	-55.41	0.01
218	SLU 39	-1258	1	8592	-0.93	-57.01	0.02
218	SLU 40	-1237	0	8516	-0.03	-56.03	0.01
218	SLU 41	-1296	1	8713	-0.94	-58.77	0.02
218	SLU 42	-1275	0	8637	-0.04	-57.79	0.01
218	SLU 43	-912	1	7730	-0.87	-41.58	0.02
218	SLU 44	-877	0	7604	0.62	-39.95	0
218	SLU 45	-963	1	7914	-0.89	-43.99	0.02
218	SLU 46	-942	0	7838	0.01	-43.01	0.01
218	SLU 47	-914	0	7725	0.61	-41.71	0
218	SLU 48	-1001	1	8035	-0.9	-45.75	0.02
218	SLU 49	-980	0	7959	-0.01	-44.77	0.01
218	SLU 50	-987	1	7972	-0.9	-45.1	0.02
218	SLU 51	-966	0	7896	0	-44.12	0.01
218	SLU 52	-1093	0	8629	0.53	-49.61	0
218	SLU 53	-1179	1	8939	-0.99	-53.65	0.02
218	SLU 54	-1158	0	8863	-0.09	-52.67	0.01
218	SLU 55	-1130	0	8750	0.52	-51.37	0
218	SLU 56	-1216	1	9060	-1	-55.41	0.02
218	SLU 57	-1195	0	8984	-0.1	-54.43	0.01
218	SLU 58	-1202	1	8997	-0.99	-54.76	0.02
218	SLU 59	-1181	0	8921	-0.09	-53.78	0.01
218	SLU 60	-1220	1	9194	-1.01	-55.38	0.02
218	SLU 61	-1199	0	9119	-0.11	-54.4	0.01
218	SLU 62	-1257	1	9315	-1.02	-57.14	0.02
218	SLU 63	-1236	0	9240	-0.12	-56.16	0.01
218	SLU 64	-1109	1	8665	-0.97	-50.46	0.02
218	SLU 65	-1074	0	8539	0.53	-48.83	0
218	SLU 66	-1160	1	8849	-0.99	-52.87	0.02
218	SLU 67	-1139	0	8773	-0.09	-51.9	0.01
218	SLU 68	-1111	0	8660	0.52	-50.59	0
218	SLU 69	-1198	1	8970	-1	-54.63	0.02
218	SLU 70	-1177	0	8894	-0.1	-53.66	0.01
218	SLU 71	-1184	1	8907	-0.99	-53.98	0.02
218	SLU 72	-1163	0	8831	-0.09	-53.01	0.01
218	SLU 73	-1290	0	9564	0.43	-58.49	0
218	SLU 74	-1376	1	9874	-1.08	-62.53	0.02
218	SLU 75	-1355	0	9798	-0.18	-61.55	0.01
218	SLU 76	-1327	0	9685	0.42	-60.25	0.01
218	SLU 77	-1413	1	9995	-1.09	-64.29	0.02
218	SLU 78	-1392	0	9919	-0.19	-63.31	0.01
218	SLU 79	-1399	1	9932	-1.09	-63.64	0.02
218	SLU 80	-1378	0	9856	-0.19	-62.66	0.01
218	SLU 81	-1417	1	10129	-1.1	-64.26	0.02
218	SLU 82	-1396	0	10054	-0.21	-63.28	0.01
218	SLU 83	-1454	1	10250	-1.12	-66.02	0.02
218	SLU 84	-1433	0	10175	-0.22	-65.04	0.01
218	SLE RA 1	-810	1	6460	-0.73	-36.87	0.01
218	SLE RA 2	-786	0	6376	0.27	-35.78	0
218	SLE RA 3	-844	1	6583	-0.74	-38.47	0.01
218	SLE RA 4	-830	0	6532	-0.14	-37.82	0.01
218	SLE RA 5	-811	0	6456	0.27	-36.95	0
218	SLE RA 6	-869	1	6663	-0.75	-39.65	0.01
218	SLE RA 7	-855	0	6613	-0.15	-38.99	0.01
218	SLE RA 8	-860	1	6621	-0.74	-39.21	0.01
218	SLE RA 9	-846	0	6571	-0.14	-38.56	0.01
218	SLE RA 10	-930	0	7059	0.21	-42.22	0
218	SLE RA 11	-988	1	7266	-0.8	-44.91	0.01
218	SLE RA 12	-974	0	7215	-0.2	-44.26	0.01
218	SLE RA 13	-955	0	7140	0.2	-43.39	0.01
218	SLE RA 14	-1013	1	7347	-0.81	-46.08	0.01
218	SLE RA 15	-999	0	7296	-0.21	-45.43	0.01
218	SLE RA 16	-1003	1	7305	-0.8	-45.65	0.01
218	SLE RA 17	-989	0	7254	-0.2	-45	0.01
218	SLE RA 18	-1015	1	7436	-0.82	-46.06	0.01
218	SLE RA 19	-1001	0	7386	-0.22	-45.41	0.01
218	SLE RA 20	-1040	1	7517	-0.82	-47.24	0.02
218	SLE RA 21	-1026	0	7466	-0.22	-46.59	0.01
218	SLE FR 1	-810	1	6460	-0.73	-36.87	0.01
218	SLE FR 2	-805	0	6443	-0.53	-36.65	0.01
218	SLE FR 3	-820	1	6492	-0.73	-37.33	0.01
218	SLE FR 4	-867	0	6736	-0.55	-39.41	0.01
218	SLE FR 5	-881	1	6785	-0.75	-40.09	0.01
218	SLE FR 6	-912	1	6948	-0.77	-41.46	0.01
218	SLE QP 1	-810	1	6460	-0.73	-36.87	0.01
218	SLE QP 2	-871	1	6753	-0.75	-39.62	0.01
218	SLD 1	659	11	6095	-12.2	32.99	0.19
218	SLD 2	659	11	6095	-12.2	32.99	0.19
218	SLD 3	548	-17	6019	18.27	27.97	-0.09
218	SLD 4	548	-17	6019	18.27	27.97	-0.09
218	SLD 5	-244	46	6670	-50.4	-10.24	0.49
218	SLD 6	-244	46	6670	-50.4	-10.24	0.49
218	SLD 7	-614	-47	6418	51.16	-26.95	-0.44
218	SLD 8	-614	-47	6418	51.16	-26.95	-0.44

Nodo	Cont.	Reazione a traslazione			Reazione a rotazione		
Ind.	N.br.	x	y	z	x	y	z
218	SLD 9	-1129	49	7088	-52.67	-52.3	0.47
218	SLD 10	-1129	49	7088	-52.67	-52.3	0.47
218	SLD 11	-1499	-45	6835	48.89	-69.01	-0.47
218	SLD 12	-1499	-45	6835	48.89	-69.01	-0.47
218	SLD 13	-2290	18	7487	-19.77	-107.22	0.11
218	SLD 14	-2290	18	7487	-19.77	-107.22	0.11
218	SLD 15	-2402	-10	7411	10.7	-112.24	-0.17
218	SLD 16	-2402	-10	7411	10.7	-112.24	-0.17
218	SLV 1	2607	28	5224	-30.21	125.44	0.47
218	SLV 2	2607	28	5224	-30.21	125.44	0.47
218	SLV 3	2347	-44	5033	47.9	113.67	-0.25
218	SLV 4	2347	-44	5033	47.9	113.67	-0.25
218	SLV 5	568	118	6583	-128.05	27.75	1.24
218	SLV 6	568	118	6583	-128.05	27.75	1.24
218	SLV 7	-301	-122	5948	132.31	-11.49	-1.15
218	SLV 8	-301	-122	5948	132.31	-11.49	-1.15
218	SLV 9	-1441	123	7558	-133.81	-67.76	1.18
218	SLV 10	-1441	123	7558	-133.81	-67.76	1.18
218	SLV 11	-2310	-117	6922	126.55	-107	-1.21
218	SLV 12	-2310	-117	6922	126.55	-107	-1.21
218	SLV 13	-4089	45	8473	-49.4	-192.92	0.27
218	SLV 14	-4089	45	8473	-49.4	-192.92	0.27
218	SLV 15	-4350	-27	8282	28.7	-204.69	-0.44
218	SLV 16	-4350	-27	8282	28.7	-204.69	-0.44
219	SLU 1	-792	1	6229	-0.94	-43.59	-0.04
219	SLU 2	-758	0	6107	0.59	-41.85	-0.02
219	SLU 3	-845	1	6418	-0.96	-46.34	-0.04
219	SLU 4	-824	0	6344	-0.05	-45.3	-0.03
219	SLU 5	-796	0	6231	0.57	-43.84	-0.02
219	SLU 6	-882	1	6543	-0.98	-48.33	-0.04
219	SLU 7	-862	0	6469	-0.06	-47.29	-0.03
219	SLU 8	-868	1	6479	-0.97	-47.57	-0.04
219	SLU 9	-847	0	6405	-0.05	-46.52	-0.03
219	SLU 10	-981	0	7118	0.47	-53.54	-0.03
219	SLU 11	-1068	1	7430	-1.09	-58.03	-0.05
219	SLU 12	-1047	0	7356	-0.17	-56.99	-0.04
219	SLU 13	-1018	0	7243	0.45	-55.53	-0.03
219	SLU 14	-1105	1	7554	-1.1	-60.02	-0.05
219	SLU 15	-1084	0	7481	-0.19	-58.98	-0.04
219	SLU 16	-1091	1	7491	-1.09	-59.26	-0.05
219	SLU 17	-1070	0	7417	-0.18	-58.22	-0.04
219	SLU 18	-1111	1	7675	-1.11	-60.29	-0.05
219	SLU 19	-1090	0	7601	-0.2	-59.25	-0.04
219	SLU 20	-1149	1	7799	-1.13	-62.28	-0.05
219	SLU 21	-1128	0	7726	-0.21	-61.24	-0.04
219	SLU 22	-996	1	7157	-1.06	-54.3	-0.05
219	SLU 23	-961	0	7034	0.47	-52.56	-0.03
219	SLU 24	-1048	1	7345	-1.09	-57.05	-0.05
219	SLU 25	-1027	0	7271	-0.17	-56.01	-0.04
219	SLU 26	-999	0	7159	0.45	-54.55	-0.03
219	SLU 27	-1086	1	7470	-1.1	-59.04	-0.05
219	SLU 28	-1065	0	7396	-0.19	-58	-0.04
219	SLU 29	-1071	1	7406	-1.09	-58.28	-0.05
219	SLU 30	-1051	0	7332	-0.18	-57.23	-0.04
219	SLU 31	-1184	0	8045	0.35	-64.25	-0.03
219	SLU 32	-1271	1	8357	-1.21	-68.75	-0.05
219	SLU 33	-1250	0	8283	-0.29	-67.7	-0.04
219	SLU 34	-1222	0	8170	0.33	-66.24	-0.03
219	SLU 35	-1309	1	8482	-1.23	-70.74	-0.05
219	SLU 36	-1288	1	8408	-0.31	-69.69	-0.04
219	SLU 37	-1294	1	8418	-1.22	-69.97	-0.05
219	SLU 38	-1274	1	8344	-0.3	-68.93	-0.04
219	SLU 39	-1314	1	8602	-1.23	-71	-0.05
219	SLU 40	-1294	1	8528	-0.32	-69.96	-0.04
219	SLU 41	-1352	1	8727	-1.25	-72.99	-0.05
219	SLU 42	-1331	1	8653	-0.33	-71.95	-0.04
219	SLU 43	-960	1	7780	-1.18	-52.99	-0.05
219	SLU 44	-926	0	7657	0.35	-51.25	-0.03
219	SLU 45	-1013	1	7969	-1.2	-55.74	-0.05
219	SLU 46	-992	0	7895	-0.29	-54.7	-0.04
219	SLU 47	-964	0	7782	0.34	-53.24	-0.03
219	SLU 48	-1050	1	8094	-1.22	-57.73	-0.05
219	SLU 49	-1030	1	8020	-0.3	-56.69	-0.04
219	SLU 50	-1036	1	8030	-1.21	-56.97	-0.05
219	SLU 51	-1015	1	7956	-0.29	-55.93	-0.04
219	SLU 52	-1149	0	8669	0.23	-62.94	-0.04
219	SLU 53	-1235	1	8981	-1.33	-67.44	-0.06
219	SLU 54	-1215	1	8907	-0.41	-66.39	-0.05
219	SLU 55	-1186	0	8794	0.21	-64.93	-0.04
219	SLU 56	-1273	1	9105	-1.34	-69.43	-0.06
219	SLU 57	-1252	1	9032	-0.43	-68.38	-0.05
219	SLU 58	-1259	1	9042	-1.33	-68.67	-0.06
219	SLU 59	-1238	1	8968	-0.42	-67.62	-0.05
219	SLU 60	-1279	1	9226	-1.35	-69.7	-0.06
219	SLU 61	-1258	1	9152	-0.44	-68.65	-0.05
219	SLU 62	-1317	1	9350	-1.37	-71.69	-0.06
219	SLU 63	-1296	1	9277	-0.45	-70.64	-0.05
219	SLU 64	-1164	1	8708	-1.3	-63.7	-0.06
219	SLU 65	-1129	0	8585	0.23	-61.96	-0.04
219	SLU 66	-1216	1	8896	-1.32	-66.46	-0.06
219	SLU 67	-1195	1	8822	-0.41	-65.41	-0.05

Nodo	Cont.	Reazione a traslazione			Reazione a rotazione		
Ind.	N.br.	x	y	z	x	y	z
219	SLU 68	-1167	0	8709	0.21	-63.95	-0.04
219	SLU 69	-1254	1	9021	-1.34	-68.45	-0.06
219	SLU 70	-1233	1	8947	-0.42	-67.4	-0.05
219	SLU 71	-1239	1	8957	-1.33	-67.68	-0.06
219	SLU 72	-1219	1	8883	-0.41	-66.64	-0.05
219	SLU 73	-1352	0	9596	0.11	-73.66	-0.04
219	SLU 74	-1439	1	9908	-1.45	-78.15	-0.06
219	SLU 75	-1418	1	9834	-0.53	-77.11	-0.05
219	SLU 76	-1390	0	9721	0.09	-75.65	-0.04
219	SLU 77	-1477	1	10033	-1.46	-80.14	-0.06
219	SLU 78	-1456	1	9959	-0.55	-79.1	-0.05
219	SLU 79	-1462	1	9969	-1.45	-79.38	-0.06
219	SLU 80	-1442	1	9895	-0.54	-78.33	-0.05
219	SLU 81	-1482	1	10153	-1.47	-80.41	-0.06
219	SLU 82	-1462	1	10079	-0.56	-79.36	-0.05
219	SLU 83	-1520	2	10278	-1.49	-82.4	-0.06
219	SLU 84	-1499	1	10204	-0.57	-81.35	-0.05
219	SLE RA 1	-851	1	6494	-0.97	-46.65	-0.04
219	SLE RA 2	-827	0	6412	0.05	-45.49	-0.03
219	SLE RA 3	-885	1	6620	-0.99	-48.48	-0.04
219	SLE RA 4	-871	1	6571	-0.38	-47.79	-0.04
219	SLE RA 5	-853	0	6496	0.04	-46.81	-0.03
219	SLE RA 6	-911	1	6703	-1	-49.81	-0.04
219	SLE RA 7	-897	1	6654	-0.39	-49.11	-0.04
219	SLE RA 8	-901	1	6661	-0.99	-49.3	-0.04
219	SLE RA 9	-887	1	6612	-0.38	-48.61	-0.04
219	SLE RA 10	-976	0	7087	-0.04	-53.28	-0.03
219	SLE RA 11	-1034	1	7295	-1.07	-56.28	-0.05
219	SLE RA 12	-1020	1	7245	-0.46	-55.58	-0.04
219	SLE RA 13	-1001	0	7170	-0.05	-54.61	-0.03
219	SLE RA 14	-1059	1	7378	-1.08	-57.61	-0.05
219	SLE RA 15	-1045	1	7329	-0.47	-56.91	-0.04
219	SLE RA 16	-1050	1	7335	-1.08	-57.1	-0.05
219	SLE RA 17	-1036	1	7286	-0.46	-56.4	-0.04
219	SLE RA 18	-1063	1	7458	-1.09	-57.78	-0.05
219	SLE RA 19	-1049	1	7409	-0.48	-57.09	-0.04
219	SLE RA 20	-1088	1	7541	-1.1	-59.11	-0.05
219	SLE RA 21	-1074	1	7492	-0.49	-58.42	-0.04
219	SLE FR 1	-851	1	6494	-0.97	-46.65	-0.04
219	SLE FR 2	-846	1	6478	-0.77	-46.42	-0.04
219	SLE FR 3	-861	1	6528	-0.98	-47.18	-0.04
219	SLE FR 4	-910	1	6767	-0.8	-49.76	-0.04
219	SLE FR 5	-924	1	6817	-1.01	-50.52	-0.04
219	SLE FR 6	-957	1	6976	-1.03	-52.22	-0.04
219	SLE QP 1	-851	1	6494	-0.97	-46.65	-0.04
219	SLE QP 2	-914	1	6783	-1.01	-49.99	-0.04
219	SLD 1	612	16	5991	-10.61	26.51	-0.3
219	SLD 2	612	16	5991	-10.61	26.51	-0.3
219	SLD 3	501	-7	5904	15.89	21.24	0.1
219	SLD 4	501	-7	5904	15.89	21.24	0.1
219	SLD 5	-288	42	6678	-44.08	-19.06	-0.74
219	SLD 6	-288	42	6678	-44.08	-19.06	-0.74
219	SLD 7	-658	-38	6388	44.25	-36.6	0.62
219	SLD 8	-658	-38	6388	44.25	-36.6	0.62
219	SLD 9	-1170	40	7179	-46.26	-63.38	-0.71
219	SLD 10	-1170	40	7179	-46.26	-63.38	-0.71
219	SLD 11	-1541	-40	6889	42.06	-80.92	0.66
219	SLD 12	-1541	-40	6889	42.06	-80.92	0.66
219	SLD 13	-2330	10	7663	-17.9	-121.22	-0.19
219	SLD 14	-2330	10	7663	-17.9	-121.22	-0.19
219	SLD 15	-2441	-14	7575	8.59	-126.48	0.22
219	SLD 16	-2441	-14	7575	8.59	-126.48	0.22
219	SLV 1	2556	40	4945	-25.83	123.91	-0.71
219	SLV 2	2556	40	4945	-25.83	123.91	-0.71
219	SLV 3	2295	-21	4731	42.09	111.56	0.34
219	SLV 4	2295	-21	4731	42.09	111.56	0.34
219	SLV 5	523	105	6558	-111.47	20.91	-1.83
219	SLV 6	523	105	6558	-111.47	20.91	-1.83
219	SLV 7	-347	-98	5842	114.94	-20.25	1.66
219	SLV 8	-347	-98	5842	114.94	-20.25	1.66
219	SLV 9	-1481	100	7725	-116.95	-79.72	-1.74
219	SLV 10	-1481	100	7725	-116.95	-79.72	-1.74
219	SLV 11	-2351	-103	7009	109.46	-120.89	1.74
219	SLV 12	-2351	-103	7009	109.46	-120.89	1.74
219	SLV 13	-4124	23	8836	-44.11	-211.53	-0.43
219	SLV 14	-4124	23	8836	-44.11	-211.53	-0.43
219	SLV 15	-4385	-38	8621	23.82	-223.88	0.62
219	SLV 16	-4385	-38	8621	23.82	-223.88	0.62
220	SLU 1	-1051	1	6180	-1.15	-54.13	0.04
220	SLU 2	-1014	0	6062	0.31	-52.21	0.04
220	SLU 3	-1110	1	6372	-1.19	-57.26	0.04
220	SLU 4	-1088	1	6301	-0.31	-56.11	0.05
220	SLU 5	-1056	0	6190	0.29	-54.45	0.05
220	SLU 6	-1152	1	6500	-1.21	-59.5	0.05
220	SLU 7	-1130	1	6429	-0.33	-58.35	0.05
220	SLU 8	-1135	1	6436	-1.2	-58.61	0.04
220	SLU 9	-1113	1	6365	-0.32	-57.46	0.05
220	SLU 10	-1287	0	7037	0.16	-65.94	0.05
220	SLU 11	-1383	2	7347	-1.34	-70.99	0.05
220	SLU 12	-1360	1	7276	-0.46	-69.83	0.05
220	SLU 13	-1329	0	7165	0.14	-68.18	0.05

Nodo	Cont.	Reazione a traslazione			Reazione a rotazione		
Ind.	N.br.	x	y	z	x	y	z
220	SLU 14	-1425	2	7475	-1.36	-73.23	0.05
220	SLU 15	-1402	1	7404	-0.48	-72.07	0.05
220	SLU 16	-1408	2	7411	-1.35	-72.34	0.05
220	SLU 17	-1386	1	7340	-0.47	-71.19	0.05
220	SLU 18	-1440	2	7573	-1.37	-73.74	0.05
220	SLU 19	-1418	1	7502	-0.49	-72.59	0.05
220	SLU 20	-1482	2	7701	-1.39	-75.98	0.05
220	SLU 21	-1460	1	7630	-0.51	-74.83	0.05
220	SLU 22	-1299	2	7080	-1.3	-66.69	0.05
220	SLU 23	-1262	0	6962	0.16	-64.77	0.05
220	SLU 24	-1358	2	7272	-1.33	-69.82	0.05
220	SLU 25	-1336	1	7201	-0.46	-68.67	0.05
220	SLU 26	-1304	0	7090	0.14	-67.01	0.05
220	SLU 27	-1400	2	7400	-1.36	-72.06	0.05
220	SLU 28	-1378	1	7329	-0.48	-70.91	0.05
220	SLU 29	-1383	2	7336	-1.34	-71.17	0.05
220	SLU 30	-1361	1	7265	-0.47	-70.02	0.05
220	SLU 31	-1534	0	7937	0.01	-78.5	0.05
220	SLU 32	-1630	2	8247	-1.48	-83.55	0.05
220	SLU 33	-1608	1	8176	-0.61	-82.39	0.06
220	SLU 34	-1576	1	8065	-0.01	-80.74	0.06
220	SLU 35	-1672	2	8375	-1.51	-85.79	0.06
220	SLU 36	-1650	1	8304	-0.63	-84.63	0.06
220	SLU 37	-1655	2	8311	-1.49	-84.9	0.05
220	SLU 38	-1633	1	8240	-0.62	-83.75	0.06
220	SLU 39	-1688	2	8473	-1.51	-86.3	0.05
220	SLU 40	-1666	1	8402	-0.64	-85.15	0.06
220	SLU 41	-1730	2	8601	-1.53	-88.54	0.06
220	SLU 42	-1708	1	8530	-0.66	-87.39	0.06
220	SLU 43	-1282	2	7726	-1.45	-66.07	0.05
220	SLU 44	-1245	0	7608	0.01	-64.14	0.06
220	SLU 45	-1341	2	7917	-1.48	-69.19	0.05
220	SLU 46	-1319	1	7847	-0.61	-68.04	0.06
220	SLU 47	-1287	1	7736	-0.01	-66.38	0.06
220	SLU 48	-1383	2	8045	-1.51	-71.43	0.06
220	SLU 49	-1361	1	7975	-0.63	-70.28	0.06
220	SLU 50	-1366	2	7982	-1.49	-70.55	0.06
220	SLU 51	-1344	1	7911	-0.62	-69.39	0.06
220	SLU 52	-1517	1	8583	-0.14	-77.87	0.06
220	SLU 53	-1613	2	8892	-1.63	-82.92	0.06
220	SLU 54	-1591	1	8822	-0.76	-81.77	0.06
220	SLU 55	-1559	1	8711	-0.16	-80.11	0.06
220	SLU 56	-1655	2	9020	-1.66	-85.16	0.06
220	SLU 57	-1633	1	8950	-0.78	-84.01	0.06
220	SLU 58	-1638	2	8956	-1.64	-84.27	0.06
220	SLU 59	-1616	1	8886	-0.77	-83.12	0.06
220	SLU 60	-1671	2	9118	-1.66	-85.68	0.06
220	SLU 61	-1649	1	9048	-0.79	-84.52	0.06
220	SLU 62	-1713	2	9246	-1.68	-87.92	0.06
220	SLU 63	-1691	1	9176	-0.81	-86.76	0.06
220	SLU 64	-1530	2	8626	-1.59	-78.63	0.06
220	SLU 65	-1493	1	8508	-0.13	-76.7	0.06
220	SLU 66	-1588	2	8817	-1.63	-81.75	0.06
220	SLU 67	-1566	1	8747	-0.75	-80.6	0.06
220	SLU 68	-1535	1	8636	-0.16	-78.94	0.06
220	SLU 69	-1630	2	8945	-1.65	-83.99	0.06
220	SLU 70	-1608	1	8875	-0.78	-82.84	0.06
220	SLU 71	-1614	2	8882	-1.64	-83.11	0.06
220	SLU 72	-1591	1	8811	-0.76	-81.95	0.06
220	SLU 73	-1765	1	9483	-0.28	-90.43	0.07
220	SLU 74	-1861	2	9792	-1.78	-95.48	0.07
220	SLU 75	-1839	1	9722	-0.9	-94.33	0.07
220	SLU 76	-1807	1	9611	-0.31	-92.67	0.07
220	SLU 77	-1903	2	9920	-1.8	-97.72	0.07
220	SLU 78	-1881	1	9850	-0.93	-96.57	0.07
220	SLU 79	-1886	2	9857	-1.79	-96.83	0.07
220	SLU 80	-1864	1	9786	-0.91	-95.68	0.07
220	SLU 81	-1918	2	10018	-1.81	-98.24	0.07
220	SLU 82	-1896	1	9948	-0.93	-97.08	0.07
220	SLU 83	-1960	2	10146	-1.83	-100.48	0.07
220	SLU 84	-1938	1	10076	-0.95	-99.32	0.07
220	SLE RA 1	-1122	1	6437	-1.19	-57.72	0.04
220	SLE RA 2	-1098	1	6359	-0.22	-56.44	0.05
220	SLE RA 3	-1161	1	6565	-1.22	-59.81	0.04
220	SLE RA 4	-1147	1	6518	-0.63	-59.04	0.05
220	SLE RA 5	-1126	1	6444	-0.24	-57.93	0.05
220	SLE RA 6	-1189	2	6650	-1.23	-61.3	0.05
220	SLE RA 7	-1175	1	6603	-0.65	-60.53	0.05
220	SLE RA 8	-1178	1	6608	-1.22	-60.71	0.05
220	SLE RA 9	-1163	1	6561	-0.64	-59.94	0.05
220	SLE RA 10	-1279	1	7009	-0.32	-65.59	0.05
220	SLE RA 11	-1343	2	7215	-1.32	-68.96	0.05
220	SLE RA 12	-1328	1	7168	-0.73	-68.19	0.05
220	SLE RA 13	-1307	1	7094	-0.34	-67.08	0.05
220	SLE RA 14	-1371	2	7300	-1.33	-70.45	0.05
220	SLE RA 15	-1356	1	7253	-0.75	-69.68	0.05
220	SLE RA 16	-1360	2	7258	-1.32	-69.86	0.05
220	SLE RA 17	-1345	1	7211	-0.74	-69.09	0.05
220	SLE RA 18	-1381	2	7366	-1.34	-70.79	0.05
220	SLE RA 19	-1367	1	7319	-0.75	-70.02	0.05
220	SLE RA 20	-1409	2	7451	-1.35	-72.29	0.05

Nodo	Cont.	Reazione a traslazione			Reazione a rotazione		
Ind.	N.br.	x	y	z	x	y	z
220	SLE RA 21	-1395	1	7404	-0.77	-71.52	0.05
220	SLE FR 1	-1122	1	6437	-1.19	-57.72	0.04
220	SLE FR 2	-1117	1	6422	-1	-57.46	0.04
220	SLE FR 3	-1133	1	6471	-1.2	-58.32	0.04
220	SLE FR 4	-1195	1	6700	-1.04	-61.39	0.05
220	SLE FR 5	-1211	2	6750	-1.24	-62.24	0.05
220	SLE FR 6	-1252	2	6902	-1.27	-64.26	0.05
220	SLE QP 1	-1122	1	6437	-1.19	-57.72	0.04
220	SLE QP 2	-1200	2	6716	-1.24	-61.64	0.05
220	SLD 1	281	14	5757	-15.74	18.37	-0.01
220	SLD 2	281	14	5757	-15.74	18.37	-0.01
220	SLD 3	172	-4	5648	6.49	12.93	0.25
220	SLD 4	172	-4	5648	6.49	12.93	0.25
220	SLD 5	-591	32	6594	-39.3	-29.39	-0.37
220	SLD 6	-591	32	6594	-39.3	-29.39	-0.37
220	SLD 7	-953	-27	6230	34.79	-47.52	0.51
220	SLD 8	-953	-27	6230	34.79	-47.52	0.51
220	SLD 9	-1447	30	7202	-37.26	-75.76	-0.42
220	SLD 10	-1447	30	7202	-37.26	-75.76	-0.42
220	SLD 11	-1809	-29	6837	36.82	-93.9	0.46
220	SLD 12	-1809	-29	6837	36.82	-93.9	0.46
220	SLD 13	-2572	7	7784	-8.96	-136.21	-0.16
220	SLD 14	-2572	7	7784	-8.96	-136.21	-0.16
220	SLD 15	-2681	-11	7674	13.26	-141.65	0.1
220	SLD 16	-2681	-11	7674	13.26	-141.65	0.1
220	SLV 1	2167	33	4495	-38.11	120.24	-0.09
220	SLV 2	2167	33	4495	-38.11	120.24	-0.09
220	SLV 3	1912	-12	4231	18.85	107.48	0.58
220	SLV 4	1912	-12	4231	18.85	107.48	0.58
220	SLV 5	197	79	6450	-98.69	12.29	-1.02
220	SLV 6	197	79	6450	-98.69	12.29	-1.02
220	SLV 7	-653	-71	5570	91.18	-30.27	1.22
220	SLV 8	-653	-71	5570	91.18	-30.27	1.22
220	SLV 9	-1747	74	7862	-93.66	-93.01	-1.13
220	SLV 10	-1747	74	7862	-93.66	-93.01	-1.13
220	SLV 11	-2597	-76	6981	96.22	-135.57	1.11
220	SLV 12	-2597	-76	6981	96.22	-135.57	1.11
220	SLV 13	-4312	15	9200	-21.33	-230.76	-0.49
220	SLV 14	-4312	15	9200	-21.33	-230.76	-0.49
220	SLV 15	-4567	-30	8936	35.64	-243.53	0.18
220	SLV 16	-4567	-30	8936	35.64	-243.53	0.18
221	SLU 1	-1272	2	6142	-1.36	-55.57	0.04
221	SLU 2	-1232	1	6028	-0.12	-53.8	0.04
221	SLU 3	-1338	2	6338	-1.41	-58.54	0.04
221	SLU 4	-1314	1	6269	-0.66	-57.47	0.04
221	SLU 5	-1279	1	6159	-0.15	-55.91	0.04
221	SLU 6	-1385	2	6469	-1.44	-60.64	0.04
221	SLU 7	-1361	2	6401	-0.69	-59.58	0.04
221	SLU 8	-1366	2	6405	-1.42	-59.79	0.04
221	SLU 9	-1341	2	6337	-0.68	-58.72	0.04
221	SLU 10	-1539	1	6973	-0.3	-67.09	0.04
221	SLU 11	-1645	2	7283	-1.58	-71.82	0.05
221	SLU 12	-1621	2	7215	-0.84	-70.76	0.05
221	SLU 13	-1585	1	7105	-0.32	-69.2	0.04
221	SLU 14	-1692	2	7415	-1.61	-73.93	0.05
221	SLU 15	-1667	2	7347	-0.86	-72.87	0.05
221	SLU 16	-1672	2	7351	-1.59	-73.07	0.05
221	SLU 17	-1648	2	7282	-0.85	-72.01	0.05
221	SLU 18	-1710	2	7493	-1.61	-74.55	0.05
221	SLU 19	-1686	2	7424	-0.87	-73.49	0.05
221	SLU 20	-1757	2	7624	-1.64	-76.66	0.05
221	SLU 21	-1733	2	7556	-0.9	-75.6	0.05
221	SLU 22	-1552	2	7021	-1.53	-67.74	0.05
221	SLU 23	-1512	1	6907	-0.29	-65.97	0.04
221	SLU 24	-1618	2	7217	-1.58	-70.7	0.05
221	SLU 25	-1594	2	7149	-0.83	-69.64	0.05
221	SLU 26	-1558	1	7039	-0.32	-68.08	0.04
221	SLU 27	-1665	2	7349	-1.61	-72.81	0.05
221	SLU 28	-1640	2	7280	-0.86	-71.75	0.05
221	SLU 29	-1645	2	7284	-1.59	-71.95	0.05
221	SLU 30	-1621	2	7216	-0.85	-70.89	0.05
221	SLU 31	-1818	1	7853	-0.47	-79.26	0.05
221	SLU 32	-1925	3	8163	-1.75	-83.99	0.05
221	SLU 33	-1900	2	8094	-1.01	-82.93	0.05
221	SLU 34	-1865	2	7984	-0.5	-81.36	0.05
221	SLU 35	-1971	3	8294	-1.78	-86.1	0.05
221	SLU 36	-1947	2	8226	-1.04	-85.03	0.05
221	SLU 37	-1952	3	8230	-1.77	-85.24	0.05
221	SLU 38	-1928	2	8162	-1.02	-84.18	0.05
221	SLU 39	-1990	3	8372	-1.78	-86.72	0.05
221	SLU 40	-1966	2	8304	-1.04	-85.66	0.05
221	SLU 41	-2037	3	8504	-1.81	-88.83	0.05
221	SLU 42	-2013	2	8435	-1.07	-87.77	0.05
221	SLU 43	-1558	3	7683	-1.71	-68.07	0.05
221	SLU 44	-1518	1	7569	-0.47	-66.3	0.05
221	SLU 45	-1624	3	7879	-1.76	-71.04	0.05
221	SLU 46	-1600	2	7810	-1.01	-69.98	0.05
221	SLU 47	-1565	2	7700	-0.5	-68.41	0.05
221	SLU 48	-1671	3	8010	-1.79	-73.14	0.05
221	SLU 49	-1647	2	7942	-1.04	-72.08	0.05
221	SLU 50	-1651	3	7946	-1.77	-72.29	0.05

Nodo	Cont.	Reazione a traslazione			Reazione a rotazione		
Ind.	N.br.	x	y	z	x	y	z
221	SLU 51	-1627	2	7878	-1.03	-71.23	0.05
221	SLU 52	-1824	2	8514	-0.65	-79.59	0.05
221	SLU 53	-1931	3	8824	-1.93	-84.32	0.06
221	SLU 54	-1907	2	8756	-1.19	-83.26	0.06
221	SLU 55	-1871	2	8646	-0.68	-81.7	0.05
221	SLU 56	-1977	3	8956	-1.96	-86.43	0.06
221	SLU 57	-1953	2	8888	-1.21	-85.37	0.06
221	SLU 58	-1958	3	8892	-1.95	-85.57	0.06
221	SLU 59	-1934	2	8823	-1.2	-84.51	0.06
221	SLU 60	-1996	3	9034	-1.96	-87.06	0.06
221	SLU 61	-1972	2	8965	-1.22	-85.99	0.06
221	SLU 62	-2043	3	9165	-1.99	-89.16	0.06
221	SLU 63	-2019	2	9097	-1.25	-88.1	0.06
221	SLU 64	-1838	3	8562	-1.88	-80.24	0.06
221	SLU 65	-1797	2	8448	-0.64	-78.47	0.05
221	SLU 66	-1904	3	8758	-1.93	-83.2	0.06
221	SLU 67	-1880	2	8690	-1.18	-82.14	0.06
221	SLU 68	-1844	2	8580	-0.67	-80.58	0.05
221	SLU 69	-1950	3	8890	-1.96	-85.31	0.06
221	SLU 70	-1926	2	8821	-1.21	-84.25	0.06
221	SLU 71	-1931	3	8826	-1.94	-84.45	0.06
221	SLU 72	-1907	2	8757	-1.2	-83.39	0.06
221	SLU 73	-2104	2	9394	-0.82	-91.76	0.06
221	SLU 74	-2210	3	9704	-2.1	-96.49	0.06
221	SLU 75	-2186	3	9635	-1.36	-95.43	0.06
221	SLU 76	-2151	2	9525	-0.85	-93.86	0.06
221	SLU 77	-2257	3	9835	-2.13	-98.6	0.06
221	SLU 78	-2233	3	9767	-1.39	-97.53	0.06
221	SLU 79	-2238	3	9771	-2.12	-97.74	0.06
221	SLU 80	-2214	3	9703	-1.37	-96.68	0.06
221	SLU 81	-2276	3	9913	-2.13	-99.22	0.06
221	SLU 82	-2252	3	9845	-1.39	-98.16	0.06
221	SLU 83	-2322	3	10045	-2.16	-101.33	0.07
221	SLU 84	-2298	3	9976	-1.42	-100.27	0.06
221	SLE RA 1	-1352	2	6393	-1.41	-59.05	0.04
221	SLE RA 2	-1325	1	6317	-0.58	-57.87	0.04
221	SLE RA 3	-1396	2	6524	-1.44	-61.03	0.04
221	SLE RA 4	-1380	2	6478	-0.94	-60.32	0.04
221	SLE RA 5	-1356	1	6405	-0.6	-59.27	0.04
221	SLE RA 6	-1427	2	6611	-1.46	-62.43	0.04
221	SLE RA 7	-1411	2	6566	-0.96	-61.72	0.04
221	SLE RA 8	-1414	2	6569	-1.45	-61.86	0.04
221	SLE RA 9	-1398	2	6523	-0.95	-61.15	0.04
221	SLE RA 10	-1530	2	6947	-0.7	-66.73	0.04
221	SLE RA 11	-1601	2	7154	-1.56	-69.88	0.05
221	SLE RA 12	-1584	2	7108	-1.06	-69.17	0.05
221	SLE RA 13	-1561	2	7035	-0.72	-68.13	0.04
221	SLE RA 14	-1632	2	7242	-1.58	-71.29	0.05
221	SLE RA 15	-1616	2	7196	-1.08	-70.58	0.05
221	SLE RA 16	-1619	2	7199	-1.57	-70.72	0.05
221	SLE RA 17	-1603	2	7153	-1.07	-70.01	0.05
221	SLE RA 18	-1644	2	7294	-1.58	-71.7	0.05
221	SLE RA 19	-1628	2	7248	-1.08	-71	0.05
221	SLE RA 20	-1675	2	7381	-1.6	-73.11	0.05
221	SLE RA 21	-1659	2	7336	-1.1	-72.4	0.05
221	SLE FR 1	-1352	2	6393	-1.41	-59.05	0.04
221	SLE FR 2	-1347	2	6378	-1.25	-58.81	0.04
221	SLE FR 3	-1365	2	6428	-1.42	-59.61	0.04
221	SLE FR 4	-1434	2	6648	-1.29	-62.61	0.04
221	SLE FR 5	-1452	2	6698	-1.47	-63.41	0.04
221	SLE FR 6	-1498	2	6843	-1.49	-65.38	0.04
221	SLE QP 1	-1352	2	6393	-1.41	-59.05	0.04
221	SLE QP 2	-1440	2	6663	-1.46	-62.85	0.04
221	SLD 1	44	10	5540	-12.11	5.68	0.05
221	SLD 2	44	10	5540	-12.11	5.68	0.05
221	SLD 3	-59	1	5406	3.53	1.19	0.14
221	SLD 4	-59	1	5406	3.53	1.19	0.14
221	SLD 5	-838	19	6530	-28.38	-35.48	-0.09
221	SLD 6	-838	19	6530	-28.38	-35.48	-0.09
221	SLD 7	-1182	-12	6082	23.76	-50.44	0.21
221	SLD 8	-1182	-12	6082	23.76	-50.44	0.21
221	SLD 9	-1697	17	7245	-26.68	-75.25	-0.12
221	SLD 10	-1697	17	7245	-26.68	-75.25	-0.12
221	SLD 11	-2041	-14	6796	25.46	-90.21	0.18
221	SLD 12	-2041	-14	6796	25.46	-90.21	0.18
221	SLD 13	-2820	4	7921	-6.45	-126.88	-0.05
221	SLD 14	-2820	4	7921	-6.45	-126.88	-0.05
221	SLD 15	-2923	-6	7786	9.19	-131.37	0.04
221	SLD 16	-2923	-6	7786	9.19	-131.37	0.04
221	SLV 1	1933	22	4066	-28.44	92.94	0.06
221	SLV 2	1933	22	4066	-28.44	92.94	0.06
221	SLV 3	1691	-2	3745	11.63	82.39	0.29
221	SLV 4	1691	-2	3745	11.63	82.39	0.29
221	SLV 5	-61	44	6371	-70.33	-0.12	-0.31
221	SLV 6	-61	44	6371	-70.33	-0.12	-0.31
221	SLV 7	-868	-35	5301	63.24	-35.27	0.47
221	SLV 8	-868	-35	5301	63.24	-35.27	0.47
221	SLV 9	-2012	39	8026	-66.16	-90.42	-0.39
221	SLV 10	-2012	39	8026	-66.16	-90.42	-0.39
221	SLV 11	-2819	-40	6955	67.41	-125.58	0.39
221	SLV 12	-2819	-40	6955	67.41	-125.58	0.39

Nodo	Cont.	Reazione a traslazione			Reazione a rotazione		
Ind.	N.br.	x	y	z	x	y	z
221	SLV 13	-4571	6	9581	-14.55	-208.09	-0.2
221	SLV 14	-4571	6	9581	-14.55	-208.09	-0.2
221	SLV 15	-4813	-18	9260	25.52	-218.63	0.03
221	SLV 16	-4813	-18	9260	25.52	-218.63	0.03
222	SLU 1	-1530	3	6080	-1.5	-58.29	0.03
222	SLU 2	-1485	2	5970	-0.64	-56.59	0.02
222	SLU 3	-1604	3	6281	-1.55	-61.19	0.03
222	SLU 4	-1578	2	6215	-1.04	-60.17	0.02
222	SLU 5	-1538	2	6106	-0.68	-58.64	0.02
222	SLU 6	-1656	3	6418	-1.59	-63.24	0.03
222	SLU 7	-1630	2	6351	-1.07	-62.22	0.03
222	SLU 8	-1634	3	6353	-1.57	-62.39	0.03
222	SLU 9	-1608	2	6287	-1.06	-61.37	0.03
222	SLU 10	-1830	2	6884	-0.83	-69.71	0.02
222	SLU 11	-1948	3	7196	-1.74	-74.32	0.03
222	SLU 12	-1922	3	7129	-1.23	-73.3	0.03
222	SLU 13	-1882	2	7021	-0.87	-71.76	0.03
222	SLU 14	-2001	3	7332	-1.78	-76.37	0.03
222	SLU 15	-1974	3	7266	-1.26	-75.35	0.03
222	SLU 16	-1979	3	7267	-1.76	-75.51	0.03
222	SLU 17	-1952	3	7201	-1.25	-74.49	0.03
222	SLU 18	-2022	3	7387	-1.77	-77.04	0.03
222	SLU 19	-1995	3	7320	-1.26	-76.02	0.03
222	SLU 20	-2074	3	7523	-1.81	-79.09	0.03
222	SLU 21	-2047	3	7457	-1.29	-78.07	0.03
222	SLU 22	-1845	3	6938	-1.69	-70.34	0.03
222	SLU 23	-1801	2	6827	-0.83	-68.63	0.02
222	SLU 24	-1919	3	7139	-1.74	-73.24	0.03
222	SLU 25	-1893	3	7073	-1.22	-72.22	0.03
222	SLU 26	-1853	2	6964	-0.87	-70.68	0.03
222	SLU 27	-1972	3	7275	-1.77	-75.29	0.03
222	SLU 28	-1945	3	7209	-1.26	-74.27	0.03
222	SLU 29	-1950	3	7211	-1.76	-74.44	0.03
222	SLU 30	-1923	3	7144	-1.24	-73.42	0.03
222	SLU 31	-2145	3	7742	-1.02	-81.76	0.03
222	SLU 32	-2264	3	8053	-1.93	-86.37	0.04
222	SLU 33	-2237	3	7987	-1.42	-85.34	0.03
222	SLU 34	-2197	3	7878	-1.06	-83.81	0.03
222	SLU 35	-2316	3	8190	-1.96	-88.42	0.04
222	SLU 36	-2289	3	8123	-1.45	-87.39	0.03
222	SLU 37	-2294	3	8125	-1.95	-87.56	0.04
222	SLU 38	-2267	3	8059	-1.43	-86.54	0.03
222	SLU 39	-2337	3	8244	-1.96	-89.09	0.04
222	SLU 40	-2310	3	8178	-1.45	-88.06	0.03
222	SLU 41	-2389	4	8380	-1.99	-91.14	0.04
222	SLU 42	-2362	3	8314	-1.48	-90.11	0.03
222	SLU 43	-1881	3	7611	-1.89	-71.65	0.03
222	SLU 44	-1836	3	7500	-1.03	-69.94	0.03
222	SLU 45	-1955	3	7812	-1.94	-74.55	0.04
222	SLU 46	-1928	3	7745	-1.42	-73.53	0.03
222	SLU 47	-1889	3	7636	-1.07	-71.99	0.03
222	SLU 48	-2007	4	7948	-1.97	-76.6	0.04
222	SLU 49	-1981	3	7882	-1.46	-75.58	0.03
222	SLU 50	-1985	3	7883	-1.96	-75.75	0.04
222	SLU 51	-1959	3	7817	-1.44	-74.72	0.03
222	SLU 52	-2181	3	8414	-1.22	-83.07	0.03
222	SLU 53	-2299	4	8726	-2.13	-87.67	0.04
222	SLU 54	-2273	3	8660	-1.61	-86.65	0.04
222	SLU 55	-2233	3	8551	-1.26	-85.12	0.03
222	SLU 56	-2352	4	8862	-2.16	-89.72	0.04
222	SLU 57	-2325	3	8796	-1.65	-88.7	0.04
222	SLU 58	-2330	4	8798	-2.15	-88.87	0.04
222	SLU 59	-2303	3	8731	-1.63	-87.85	0.04
222	SLU 60	-2373	4	8917	-2.16	-90.39	0.04
222	SLU 61	-2346	3	8850	-1.64	-89.37	0.04
222	SLU 62	-2425	4	9053	-2.19	-92.45	0.04
222	SLU 63	-2398	3	8987	-1.68	-91.42	0.04
222	SLU 64	-2196	4	8468	-2.07	-83.69	0.04
222	SLU 65	-2152	3	8358	-1.22	-81.99	0.03
222	SLU 66	-2270	4	8669	-2.12	-86.6	0.04
222	SLU 67	-2244	3	8603	-1.61	-85.58	0.04
222	SLU 68	-2204	3	8494	-1.25	-84.04	0.03
222	SLU 69	-2323	4	8805	-2.16	-88.65	0.04
222	SLU 70	-2296	3	8739	-1.65	-87.63	0.04
222	SLU 71	-2301	4	8741	-2.14	-87.8	0.04
222	SLU 72	-2274	3	8674	-1.63	-86.77	0.04
222	SLU 73	-2496	3	9272	-1.41	-95.11	0.04
222	SLU 74	-2615	4	9583	-2.32	-99.72	0.04
222	SLU 75	-2588	4	9517	-1.8	-98.7	0.04
222	SLU 76	-2548	3	9408	-1.44	-97.16	0.04
222	SLU 77	-2667	4	9720	-2.35	-101.77	0.04
222	SLU 78	-2640	4	9653	-1.84	-100.75	0.04
222	SLU 79	-2645	4	9655	-2.33	-100.92	0.04
222	SLU 80	-2618	4	9589	-1.82	-99.9	0.04
222	SLU 81	-2688	4	9774	-2.35	-102.44	0.04
222	SLU 82	-2661	4	9708	-1.83	-101.42	0.04
222	SLU 83	-2740	4	9911	-2.38	-104.49	0.04
222	SLU 84	-2713	4	9844	-1.87	-103.47	0.04
222	SLE RA 1	-1620	3	6325	-1.55	-61.73	0.03
222	SLE RA 2	-1590	2	6252	-0.98	-60.6	0.02
222	SLE RA 3	-1670	3	6459	-1.59	-63.67	0.03

Nodo	Cont.	Reazione a traslazione			Reazione a rotazione		
Ind.	N.br.	x	y	z	x	y	z
222	SLE RA 4	-1652	3	6415	-1.25	-62.99	0.03
222	SLE RA 5	-1625	2	6343	-1.01	-61.96	0.02
222	SLE RA 6	-1704	3	6550	-1.61	-65.03	0.03
222	SLE RA 7	-1687	3	6506	-1.27	-64.35	0.03
222	SLE RA 8	-1690	3	6507	-1.6	-64.47	0.03
222	SLE RA 9	-1672	3	6463	-1.26	-63.78	0.03
222	SLE RA 10	-1820	3	6861	-1.11	-69.35	0.03
222	SLE RA 11	-1899	3	7069	-1.71	-72.42	0.03
222	SLE RA 12	-1881	3	7025	-1.37	-71.74	0.03
222	SLE RA 13	-1855	3	6952	-1.13	-70.71	0.03
222	SLE RA 14	-1934	3	7160	-1.74	-73.78	0.03
222	SLE RA 15	-1916	3	7116	-1.4	-73.1	0.03
222	SLE RA 16	-1919	3	7117	-1.73	-73.22	0.03
222	SLE RA 17	-1901	3	7073	-1.39	-72.53	0.03
222	SLE RA 18	-1948	3	7196	-1.74	-74.23	0.03
222	SLE RA 19	-1930	3	7152	-1.39	-73.55	0.03
222	SLE RA 20	-1983	3	7287	-1.76	-75.6	0.03
222	SLE RA 21	-1965	3	7243	-1.42	-74.92	0.03
222	SLE FR 1	-1620	3	6325	-1.55	-61.73	0.03
222	SLE FR 2	-1614	3	6311	-1.44	-61.5	0.03
222	SLE FR 3	-1634	3	6362	-1.56	-62.28	0.03
222	SLE FR 4	-1712	3	6572	-1.49	-65.25	0.03
222	SLE FR 5	-1732	3	6623	-1.62	-66.03	0.03
222	SLE FR 6	-1784	3	6761	-1.64	-67.98	0.03
222	SLE QP 1	-1620	3	6325	-1.55	-61.73	0.03
222	SLE QP 2	-1718	3	6587	-1.61	-65.48	0.03
222	SLD 1	-228	5	5243	-7.99	-5.19	0.02
222	SLD 2	-228	5	5243	-7.99	-5.19	0.02
222	SLD 3	-324	7	5081	0.52	-8.89	-0.02
222	SLD 4	-324	7	5081	0.52	-8.89	-0.02
222	SLD 5	-1126	1	6428	-16.43	-41.78	0.09
222	SLD 6	-1126	1	6428	-16.43	-41.78	0.09
222	SLD 7	-1446	7	5891	11.94	-54.12	-0.05
222	SLD 8	-1446	7	5891	11.94	-54.12	-0.05
222	SLD 9	-1991	-1	7283	-15.16	-76.84	0.11
222	SLD 10	-1991	-1	7283	-15.16	-76.84	0.11
222	SLD 11	-2311	5	6745	13.22	-89.19	-0.03
222	SLD 12	-2311	5	6745	13.22	-89.19	-0.03
222	SLD 13	-3113	-1	8092	-3.74	-122.07	0.08
222	SLD 14	-3113	-1	8092	-3.74	-122.07	0.08
222	SLD 15	-3209	0	7931	4.77	-125.77	0.04
222	SLD 16	-3209	0	7931	4.77	-125.77	0.04
222	SLV 1	1670	9	3489	-17.68	71.61	0
222	SLV 2	1670	9	3489	-17.68	71.61	0
222	SLV 3	1444	14	3106	4.11	62.89	-0.11
222	SLV 4	1444	14	3106	4.11	62.89	-0.11
222	SLV 5	-359	-3	6237	-39.48	-11.13	0.19
222	SLV 6	-359	-3	6237	-39.48	-11.13	0.19
222	SLV 7	-1112	13	4962	33.15	-40.2	-0.18
222	SLV 8	-1112	13	4962	33.15	-40.2	-0.18
222	SLV 9	-2324	-8	8211	-36.37	-90.77	0.24
222	SLV 10	-2324	-8	8211	-36.37	-90.77	0.24
222	SLV 11	-3078	8	6936	36.26	-119.84	-0.13
222	SLV 12	-3078	8	6936	36.26	-119.84	-0.13
222	SLV 13	-4881	-8	10067	-7.32	-193.86	0.17
222	SLV 14	-4881	-8	10067	-7.32	-193.86	0.17
222	SLV 15	-5107	-3	9685	14.46	-202.58	0.06
222	SLV 16	-5107	-3	9685	14.46	-202.58	0.06
223	SLU 1	-1589	5	5866	-1.87	-84	0.01
223	SLU 2	-1544	5	5762	-1.46	-81.8	0.03
223	SLU 3	-1660	5	6067	-1.94	-87.84	0.01
223	SLU 4	-1633	5	6004	-1.69	-86.51	0.02
223	SLU 5	-1593	5	5899	-1.51	-84.49	0.03
223	SLU 6	-1710	6	6204	-1.99	-90.52	0.01
223	SLU 7	-1682	6	6141	-1.74	-89.2	0.02
223	SLU 8	-1688	5	6140	-1.97	-89.38	0.01
223	SLU 9	-1661	5	6078	-1.72	-88.06	0.02
223	SLU 10	-1887	6	6627	-1.69	-98.99	0.03
223	SLU 11	-2003	6	6931	-2.18	-105.03	0.01
223	SLU 12	-1976	6	6869	-1.93	-103.71	0.02
223	SLU 13	-1936	6	6764	-1.74	-101.68	0.03
223	SLU 14	-2053	6	7068	-2.22	-107.72	0.01
223	SLU 15	-2026	6	7006	-1.97	-106.4	0.02
223	SLU 16	-2031	6	7005	-2.2	-106.57	0.01
223	SLU 17	-2004	6	6942	-1.95	-105.25	0.02
223	SLU 18	-2080	6	7101	-2.21	-108.57	0.01
223	SLU 19	-2052	6	7039	-1.96	-107.24	0.02
223	SLU 20	-2129	6	7238	-2.26	-111.25	0.01
223	SLU 21	-2102	6	7176	-2.01	-109.93	0.02
223	SLU 22	-1903	6	6683	-2.11	-99.88	0.01
223	SLU 23	-1857	6	6579	-1.69	-97.68	0.03
223	SLU 24	-1974	6	6883	-2.18	-103.71	0.01
223	SLU 25	-1946	6	6821	-1.93	-102.39	0.02
223	SLU 26	-1907	6	6716	-1.74	-100.36	0.03
223	SLU 27	-2023	6	7020	-2.22	-106.4	0.01
223	SLU 28	-1996	6	6958	-1.97	-105.08	0.02
223	SLU 29	-2001	6	6957	-2.2	-105.26	0.01
223	SLU 30	-1974	6	6895	-1.95	-103.93	0.02
223	SLU 31	-2201	6	7443	-1.93	-114.87	0.03
223	SLU 32	-2317	7	7748	-2.41	-120.91	0.01
223	SLU 33	-2290	7	7685	-2.16	-119.59	0.03

Nodo	Cont.	Reazione a traslazione			Reazione a rotazione		
Ind.	N.br.	x	y	z	x	y	z
223	SLU 34	-2250	7	7580	-1.97	-117.56	0.03
223	SLU 35	-2366	7	7885	-2.46	-123.6	0.01
223	SLU 36	-2339	7	7822	-2.21	-122.27	0.03
223	SLU 37	-2345	7	7821	-2.44	-122.45	0.01
223	SLU 38	-2317	7	7759	-2.19	-121.13	0.03
223	SLU 39	-2393	7	7917	-2.44	-124.44	0.01
223	SLU 40	-2366	7	7855	-2.19	-123.12	0.03
223	SLU 41	-2442	7	8055	-2.49	-127.13	0.01
223	SLU 42	-2415	7	7992	-2.24	-125.81	0.03
223	SLU 43	-1958	7	7346	-2.35	-103.76	0.01
223	SLU 44	-1913	6	7242	-1.94	-101.56	0.03
223	SLU 45	-2029	7	7546	-2.42	-107.59	0.01
223	SLU 46	-2002	7	7484	-2.17	-106.27	0.02
223	SLU 47	-1962	7	7379	-1.99	-104.24	0.03
223	SLU 48	-2079	7	7684	-2.47	-110.28	0.01
223	SLU 49	-2052	7	7621	-2.22	-108.96	0.03
223	SLU 50	-2057	7	7620	-2.45	-109.14	0.01
223	SLU 51	-2030	7	7558	-2.2	-107.81	0.03
223	SLU 52	-2256	7	8106	-2.17	-118.75	0.03
223	SLU 53	-2373	7	8411	-2.66	-124.79	0.01
223	SLU 54	-2346	7	8348	-2.41	-123.47	0.03
223	SLU 55	-2306	7	8244	-2.22	-121.44	0.03
223	SLU 56	-2422	8	8548	-2.71	-127.48	0.02
223	SLU 57	-2395	7	8486	-2.46	-126.15	0.03
223	SLU 58	-2400	7	8485	-2.68	-126.33	0.02
223	SLU 59	-2373	7	8422	-2.44	-125.01	0.03
223	SLU 60	-2449	7	8581	-2.69	-128.32	0.01
223	SLU 61	-2422	7	8518	-2.44	-127	0.03
223	SLU 62	-2498	8	8718	-2.74	-131.01	0.02
223	SLU 63	-2471	8	8656	-2.49	-129.69	0.03
223	SLU 64	-2272	7	8163	-2.59	-119.64	0.01
223	SLU 65	-2227	7	8059	-2.17	-117.43	0.03
223	SLU 66	-2343	7	8363	-2.66	-123.47	0.02
223	SLU 67	-2316	7	8301	-2.41	-122.15	0.03
223	SLU 68	-2276	7	8196	-2.22	-120.12	0.03
223	SLU 69	-2392	8	8500	-2.7	-126.16	0.02
223	SLU 70	-2365	7	8438	-2.45	-124.84	0.03
223	SLU 71	-2371	7	8437	-2.68	-125.01	0.02
223	SLU 72	-2343	7	8375	-2.43	-123.69	0.03
223	SLU 73	-2570	8	8923	-2.41	-134.63	0.04
223	SLU 74	-2686	8	9227	-2.89	-140.67	0.02
223	SLU 75	-2659	8	9165	-2.64	-139.34	0.03
223	SLU 76	-2619	8	9060	-2.46	-137.32	0.04
223	SLU 77	-2736	8	9365	-2.94	-143.35	0.02
223	SLU 78	-2708	8	9302	-2.69	-142.03	0.03
223	SLU 79	-2714	8	9301	-2.92	-142.21	0.02
223	SLU 80	-2687	8	9239	-2.67	-140.89	0.03
223	SLU 81	-2762	8	9397	-2.93	-144.2	0.02
223	SLU 82	-2735	8	9335	-2.68	-142.88	0.03
223	SLU 83	-2812	8	9534	-2.97	-146.89	0.02
223	SLU 84	-2784	8	9472	-2.72	-145.57	0.03
223	SLE RA 1	-1679	5	6099	-1.94	-88.54	0.01
223	SLE RA 2	-1648	5	6030	-1.66	-87.07	0.02
223	SLE RA 3	-1726	6	6233	-1.99	-91.1	0.01
223	SLE RA 4	-1708	5	6192	-1.82	-90.21	0.02
223	SLE RA 5	-1681	5	6122	-1.69	-88.86	0.02
223	SLE RA 6	-1759	6	6325	-2.02	-92.89	0.01
223	SLE RA 7	-1741	6	6283	-1.85	-92.01	0.02
223	SLE RA 8	-1745	6	6282	-2	-92.12	0.01
223	SLE RA 9	-1726	6	6241	-1.84	-91.24	0.02
223	SLE RA 10	-1877	6	6606	-1.82	-98.53	0.02
223	SLE RA 11	-1955	6	6809	-2.14	-102.56	0.01
223	SLE RA 12	-1937	6	6768	-1.98	-101.68	0.02
223	SLE RA 13	-1910	6	6698	-1.85	-100.32	0.02
223	SLE RA 14	-1988	6	6901	-2.17	-104.35	0.01
223	SLE RA 15	-1970	6	6859	-2.01	-103.47	0.02
223	SLE RA 16	-1973	6	6859	-2.16	-103.59	0.01
223	SLE RA 17	-1955	6	6817	-1.99	-102.7	0.02
223	SLE RA 18	-2006	6	6923	-2.16	-104.91	0.01
223	SLE RA 19	-1987	6	6881	-2	-104.03	0.02
223	SLE RA 20	-2039	6	7014	-2.2	-106.71	0.01
223	SLE RA 21	-2020	6	6972	-2.03	-105.83	0.02
223	SLE FR 1	-1679	5	6099	-1.94	-88.54	0.01
223	SLE FR 2	-1673	5	6086	-1.88	-88.25	0.01
223	SLE FR 3	-1692	5	6136	-1.95	-89.26	0.01
223	SLE FR 4	-1771	6	6333	-1.95	-93.16	0.01
223	SLE FR 5	-1790	6	6383	-2.02	-94.17	0.01
223	SLE FR 6	-1842	6	6511	-2.05	-96.73	0.01
223	SLE QP 1	-1679	5	6099	-1.94	-88.54	0.01
223	SLE QP 2	-1777	6	6346	-2.01	-93.45	0.01
223	SLD 1	-539	-1	4803	-2.42	-25.85	-0.03
223	SLD 2	-539	-1	4803	-2.42	-25.85	-0.03
223	SLD 3	-627	5	4624	1.54	-29.35	-0.08
223	SLD 4	-627	5	4624	1.54	-29.35	-0.08
223	SLD 5	-1273	-5	6154	-8.13	-67.85	0.08
223	SLD 6	-1273	-5	6154	-8.13	-67.85	0.08
223	SLD 7	-1564	14	5559	5.06	-79.54	-0.1
223	SLD 8	-1564	14	5559	5.06	-79.54	-0.1
223	SLD 9	-1989	-3	7134	-9.07	-107.36	0.12
223	SLD 10	-1989	-3	7134	-9.07	-107.36	0.12
223	SLD 11	-2280	16	6538	4.12	-119.05	-0.06

Nodo	Cont.	Reazione a traslazione			Reazione a rotazione		
Ind.	N.br.	x	y	z	x	y	z
223	SLD 12	-2280	16	6538	4.12	-119.05	-0.06
223	SLD 13	-2927	6	8069	-5.55	-157.55	0.11
223	SLD 14	-2927	6	8069	-5.55	-157.55	0.11
223	SLD 15	-3014	12	7890	-1.6	-161.06	0.05
223	SLD 16	-3014	12	7890	-1.6	-161.06	0.05
223	SLV 1	1038	-10	2801	-3.23	60.35	-0.1
223	SLV 2	1038	-10	2801	-3.23	60.35	-0.1
223	SLV 3	833	5	2378	6.83	52.02	-0.23
223	SLV 4	833	5	2378	6.83	52.02	-0.23
223	SLV 5	-621	-21	5924	-17.62	-34.67	0.18
223	SLV 6	-621	-21	5924	-17.62	-34.67	0.18
223	SLV 7	-1305	28	4514	15.89	-62.46	-0.26
223	SLV 8	-1305	28	4514	15.89	-62.46	-0.26
223	SLV 9	-2248	-16	8179	-19.91	-124.45	0.29
223	SLV 10	-2248	-16	8179	-19.91	-124.45	0.29
223	SLV 11	-2932	33	6768	13.61	-152.24	-0.16
223	SLV 12	-2932	33	6768	13.61	-152.24	-0.16
223	SLV 13	-4386	7	10315	-10.84	-238.92	0.25
223	SLV 14	-4386	7	10315	-10.84	-238.92	0.25
223	SLV 15	-4591	21	9892	-0.79	-247.26	0.12
223	SLV 16	-4591	21	9892	-0.79	-247.26	0.12
224	SLU 1	-2008	576	10101	-19.96	-58.98	0.02
224	SLU 2	-1963	637	9929	-22.73	-57.51	-0.02
224	SLU 3	-2091	598	10473	-20.73	-61.59	0.03
224	SLU 4	-2065	635	10370	-22.39	-60.71	0
224	SLU 5	-2022	652	10187	-23.26	-59.33	-0.02
224	SLU 6	-2149	614	10732	-21.26	-63.42	0.03
224	SLU 7	-2123	650	10629	-22.92	-62.53	0
224	SLU 8	-2124	607	10618	-21.02	-62.63	0.03
224	SLU 9	-2098	643	10515	-22.68	-61.75	0
224	SLU 10	-2320	709	11429	-25.19	-69.03	-0.02
224	SLU 11	-2447	671	11974	-23.19	-73.12	0.03
224	SLU 12	-2421	707	11870	-24.85	-72.23	0
224	SLU 13	-2378	724	11688	-25.72	-70.86	-0.02
224	SLU 14	-2506	686	12232	-23.72	-74.94	0.03
224	SLU 15	-2479	722	12129	-25.38	-74.06	0
224	SLU 16	-2480	679	12119	-23.48	-74.16	0.03
224	SLU 17	-2454	716	12015	-25.14	-73.27	0
224	SLU 18	-2517	679	12245	-23.48	-75.45	0.03
224	SLU 19	-2490	716	12141	-25.14	-74.56	0
224	SLU 20	-2575	695	12503	-24.01	-77.27	0.03
224	SLU 21	-2548	731	12400	-25.67	-76.39	0
224	SLU 22	-2341	649	11530	-22.46	-69.67	0.03
224	SLU 23	-2297	710	11357	-25.23	-68.2	-0.02
224	SLU 24	-2425	671	11902	-23.22	-72.28	0.03
224	SLU 25	-2398	708	11799	-24.88	-71.4	0
224	SLU 26	-2355	725	11616	-25.75	-70.02	-0.02
224	SLU 27	-2483	687	12161	-23.75	-74.11	0.03
224	SLU 28	-2456	723	12057	-25.41	-73.22	0
224	SLU 29	-2458	680	12047	-23.52	-73.32	0.03
224	SLU 30	-2431	716	11944	-25.18	-72.44	0
224	SLU 31	-2653	782	12858	-27.69	-79.73	-0.02
224	SLU 32	-2781	743	13403	-25.68	-83.81	0.03
224	SLU 33	-2754	780	13299	-27.34	-82.92	0
224	SLU 34	-2711	797	13117	-28.22	-81.55	-0.02
224	SLU 35	-2839	759	13661	-26.21	-85.63	0.03
224	SLU 36	-2813	795	13558	-27.87	-84.75	0
224	SLU 37	-2814	752	13548	-25.98	-84.85	0.03
224	SLU 38	-2787	788	13444	-27.64	-83.97	0
224	SLU 39	-2850	752	13673	-25.97	-86.14	0.03
224	SLU 40	-2824	788	13570	-27.64	-85.25	0
224	SLU 41	-2908	768	13932	-26.5	-87.96	0.03
224	SLU 42	-2882	804	13829	-28.16	-87.08	0
224	SLU 43	-2496	724	12642	-25.1	-73.01	0.03
224	SLU 44	-2451	785	12469	-27.87	-71.54	-0.02
224	SLU 45	-2579	746	13014	-25.86	-75.62	0.03
224	SLU 46	-2553	783	12910	-27.52	-74.73	0
224	SLU 47	-2510	800	12728	-28.39	-73.36	-0.02
224	SLU 48	-2637	762	13272	-26.39	-77.44	0.03
224	SLU 49	-2611	798	13169	-28.05	-76.56	0
224	SLU 50	-2612	755	13159	-26.16	-76.66	0.03
224	SLU 51	-2586	791	13055	-27.82	-75.78	0
224	SLU 52	-2808	857	13970	-30.33	-83.06	-0.01
224	SLU 53	-2935	818	14514	-28.32	-87.15	0.03
224	SLU 54	-2909	855	14411	-29.98	-86.26	0.01
224	SLU 55	-2866	872	14228	-30.86	-84.89	-0.01
224	SLU 56	-2994	834	14773	-28.85	-88.97	0.04
224	SLU 57	-2967	870	14669	-30.51	-88.09	0.01
224	SLU 58	-2968	827	14659	-28.62	-88.19	0.03
224	SLU 59	-2942	863	14556	-30.28	-87.3	0.01
224	SLU 60	-3005	827	14785	-28.61	-89.48	0.04
224	SLU 61	-2978	864	14682	-30.27	-88.59	0.01
224	SLU 62	-3063	843	15044	-29.14	-91.3	0.04
224	SLU 63	-3036	879	14940	-30.8	-90.42	0.01
224	SLU 64	-2829	797	14070	-27.59	-83.7	0.03
224	SLU 65	-2785	858	13898	-30.36	-82.23	-0.01
224	SLU 66	-2913	819	14443	-28.36	-86.31	0.03
224	SLU 67	-2886	855	14339	-30.02	-85.43	0.01
224	SLU 68	-2843	873	14157	-30.89	-84.05	-0.01
224	SLU 69	-2971	835	14701	-28.88	-88.14	0.03
224	SLU 70	-2944	871	14598	-30.54	-87.25	0.01

Nodo	Cont.	Reazione a traslazione			Reazione a rotazione		
Ind.	N.br.	x	y	z	x	y	z
224	SLU 71	-2946	828	14588	-28.65	-87.35	0.03
224	SLU 72	-2919	864	14484	-30.31	-86.47	0.01
224	SLU 73	-3141	930	15398	-32.82	-93.75	-0.01
224	SLU 74	-3269	891	15943	-30.82	-97.84	0.04
224	SLU 75	-3242	928	15840	-32.48	-96.95	0.01
224	SLU 76	-3199	945	15657	-33.35	-95.58	-0.01
224	SLU 77	-3327	907	16202	-31.34	-99.66	0.04
224	SLU 78	-3301	943	16098	-33	-98.78	0.01
224	SLU 79	-3302	900	16088	-31.11	-98.88	0.04
224	SLU 80	-3275	936	15985	-32.77	-97.99	0.01
224	SLU 81	-3338	900	16214	-31.11	-100.17	0.04
224	SLU 82	-3312	936	16110	-32.77	-99.28	0.01
224	SLU 83	-3396	915	16472	-31.64	-101.99	0.04
224	SLU 84	-3370	952	16369	-33.3	-101.11	0.01
224	SLE RA 1	-2103	597	10509	-20.68	-62.04	0.03
224	SLE RA 2	-2073	637	10394	-22.52	-61.05	-0.01
224	SLE RA 3	-2159	612	10758	-21.19	-63.78	0.03
224	SLE RA 4	-2141	636	10689	-22.29	-63.19	0.01
224	SLE RA 5	-2112	648	10567	-22.87	-62.27	-0.01
224	SLE RA 6	-2197	622	10930	-21.54	-64.99	0.03
224	SLE RA 7	-2180	646	10861	-22.64	-64.4	0.01
224	SLE RA 8	-2181	618	10854	-21.38	-64.47	0.03
224	SLE RA 9	-2163	642	10785	-22.49	-63.88	0.01
224	SLE RA 10	-2311	686	11395	-24.16	-68.74	0
224	SLE RA 11	-2396	660	11758	-22.83	-71.46	0.03
224	SLE RA 12	-2378	684	11689	-23.93	-70.87	0.01
224	SLE RA 13	-2350	696	11567	-24.51	-69.95	0
224	SLE RA 14	-2435	670	11930	-23.18	-72.68	0.03
224	SLE RA 15	-2417	694	11861	-24.29	-72.09	0.01
224	SLE RA 16	-2418	666	11854	-23.02	-72.15	0.03
224	SLE RA 17	-2400	690	11786	-24.13	-71.56	0.01
224	SLE RA 18	-2442	666	11938	-23.02	-73.01	0.03
224	SLE RA 19	-2425	690	11869	-24.13	-72.42	0.01
224	SLE RA 20	-2481	676	12111	-23.37	-74.23	0.03
224	SLE RA 21	-2463	700	12042	-24.48	-73.64	0.01
224	SLE FR 1	-2103	597	10509	-20.68	-62.04	0.03
224	SLE FR 2	-2097	605	10486	-21.05	-61.84	0.02
224	SLE FR 3	-2118	601	10578	-20.82	-62.52	0.03
224	SLE FR 4	-2199	626	10915	-21.75	-65.13	0.02
224	SLE FR 5	-2220	622	11007	-21.52	-65.82	0.03
224	SLE FR 6	-2273	631	11224	-21.85	-67.52	0.03
224	SLE QP 1	-2103	597	10509	-20.68	-62.04	0.03
224	SLE QP 2	-2205	618	10938	-21.38	-65.33	0.03
224	SLD 1	-1020	678	7235	-24.98	-22.67	0.28
224	SLD 2	-1020	678	7235	-24.98	-22.67	0.28
224	SLD 3	-1063	176	6887	-3.31	-24.61	-0.01
224	SLD 4	-1063	176	6887	-3.31	-24.61	-0.01
224	SLD 5	-1783	1398	10355	-55.34	-49.6	0.54
224	SLD 6	-1783	1398	10355	-55.34	-49.6	0.54
224	SLD 7	-1928	-277	9195	16.92	-56.05	-0.42
224	SLD 8	-1928	-277	9195	16.92	-56.05	-0.42
224	SLD 9	-2481	1513	12681	-59.68	-74.61	0.47
224	SLD 10	-2481	1513	12681	-59.68	-74.61	0.47
224	SLD 11	-2626	-163	11521	12.58	-81.06	-0.49
224	SLD 12	-2626	-163	11521	12.58	-81.06	-0.49
224	SLD 13	-3346	1060	14989	-39.46	-106.05	0.06
224	SLD 14	-3346	1060	14989	-39.46	-106.05	0.06
224	SLD 15	-3390	557	14641	-17.78	-107.99	-0.23
224	SLD 16	-3390	557	14641	-17.78	-107.99	-0.23
224	SLV 1	496	756	2483	-29.63	31.77	0.67
224	SLV 2	496	756	2483	-29.63	31.77	0.67
224	SLV 3	389	-416	1659	20.89	27.12	-0.06
224	SLV 4	389	-416	1659	20.89	27.12	-0.06
224	SLV 5	-1231	2436	9651	-100.48	-29.14	1.34
224	SLV 6	-1231	2436	9651	-100.48	-29.14	1.34
224	SLV 7	-1590	-1469	6904	67.93	-44.65	-1.12
224	SLV 8	-1590	-1469	6904	67.93	-44.65	-1.12
224	SLV 9	-2820	2704	14972	-110.69	-86.01	1.17
224	SLV 10	-2820	2704	14972	-110.69	-86.01	1.17
224	SLV 11	-3178	-1200	12225	57.72	-101.52	-1.29
224	SLV 12	-3178	-1200	12225	57.72	-101.52	-1.29
224	SLV 13	-4798	1651	20217	-63.66	-157.78	0.12
224	SLV 14	-4798	1651	20217	-63.66	-157.78	0.12
224	SLV 15	-4906	480	19393	-13.13	-162.43	-0.62
224	SLV 16	-4906	480	19393	-13.13	-162.43	-0.62
225	SLU 1	9	-119	5009	4.7	8.3	-0.01
225	SLU 2	11	-10	4916	0.11	9.26	-0.01
225	SLU 3	9	-123	5169	4.86	8.62	-0.01
225	SLU 4	10	-58	5113	2.11	9.2	-0.01
225	SLU 5	11	-12	5025	0.2	9.47	-0.01
225	SLU 6	9	-125	5278	4.95	8.84	-0.01
225	SLU 7	10	-60	5222	2.2	9.41	-0.01
225	SLU 8	9	-123	5228	4.88	8.72	-0.01
225	SLU 9	10	-58	5172	2.12	9.3	-0.01
225	SLU 10	12	-31	5491	0.92	10.52	-0.01
225	SLU 11	10	-144	5744	5.67	9.89	-0.01
225	SLU 12	12	-79	5688	2.92	10.46	-0.01
225	SLU 13	12	-33	5601	1.01	10.73	-0.01
225	SLU 14	11	-146	5854	5.76	10.1	-0.01
225	SLU 15	12	-80	5798	3.01	10.67	-0.01
225	SLU 16	10	-144	5804	5.69	9.99	-0.01

Nodo	Cont.	Reazione a traslazione			Reazione a rotazione		
Ind.	N.br.	x	y	z	x	y	z
225	SLU 17	12	-78	5748	2.93	10.56	-0.01
225	SLU 18	11	-149	5831	5.86	10.11	-0.01
225	SLU 19	12	-84	5775	3.1	10.68	-0.01
225	SLU 20	11	-151	5941	5.95	10.32	-0.01
225	SLU 21	12	-85	5885	3.19	10.89	-0.01
225	SLU 22	10	-139	5576	5.47	9.53	-0.01
225	SLU 23	12	-30	5483	0.88	10.48	-0.01
225	SLU 24	10	-143	5736	5.63	9.85	-0.01
225	SLU 25	12	-77	5680	2.88	10.42	-0.01
225	SLU 26	12	-32	5593	0.97	10.69	-0.01
225	SLU 27	11	-144	5846	5.72	10.06	-0.01
225	SLU 28	12	-79	5790	2.97	10.63	-0.01
225	SLU 29	10	-142	5796	5.65	9.95	-0.01
225	SLU 30	12	-77	5740	2.89	10.52	-0.01
225	SLU 31	13	-51	6059	1.69	11.74	-0.01
225	SLU 32	12	-163	6312	6.44	11.11	-0.01
225	SLU 33	13	-98	6256	3.69	11.68	-0.01
225	SLU 34	14	-52	6168	1.78	11.95	-0.01
225	SLU 35	12	-165	6421	6.53	11.32	-0.01
225	SLU 36	13	-100	6365	3.78	11.89	-0.01
225	SLU 37	12	-163	6371	6.46	11.21	-0.01
225	SLU 38	13	-98	6315	3.7	11.78	-0.01
225	SLU 39	12	-168	6399	6.63	11.33	-0.01
225	SLU 40	13	-103	6343	3.87	11.9	-0.01
225	SLU 41	12	-170	6508	6.72	11.54	-0.01
225	SLU 42	13	-105	6452	3.96	12.11	-0.01
225	SLU 43	11	-148	6317	5.85	10.38	-0.01
225	SLU 44	13	-39	6224	1.26	11.33	-0.01
225	SLU 45	11	-152	6477	6.01	10.7	-0.01
225	SLU 46	12	-87	6421	3.26	11.27	-0.01
225	SLU 47	13	-41	6333	1.35	11.54	-0.01
225	SLU 48	11	-154	6586	6.1	10.91	-0.01
225	SLU 49	13	-89	6530	3.35	11.48	-0.01
225	SLU 50	11	-152	6536	6.02	10.8	-0.01
225	SLU 51	13	-87	6480	3.27	11.37	-0.01
225	SLU 52	14	-60	6799	2.07	12.59	-0.01
225	SLU 53	12	-173	7052	6.82	11.96	-0.01
225	SLU 54	14	-108	6996	4.07	12.53	-0.01
225	SLU 55	14	-62	6909	2.16	12.8	-0.01
225	SLU 56	13	-175	7162	6.91	12.17	-0.01
225	SLU 57	14	-109	7106	4.16	12.74	-0.01
225	SLU 58	13	-173	7112	6.83	12.06	-0.01
225	SLU 59	14	-107	7056	4.08	12.63	-0.01
225	SLU 60	13	-178	7139	7	12.18	-0.01
225	SLU 61	14	-113	7083	4.25	12.75	-0.01
225	SLU 62	13	-180	7249	7.09	12.39	-0.01
225	SLU 63	14	-114	7193	4.34	12.96	-0.01
225	SLU 64	12	-168	6884	6.62	11.6	-0.01
225	SLU 65	14	-59	6791	2.03	12.55	-0.01
225	SLU 66	12	-172	7044	6.78	11.92	-0.01
225	SLU 67	14	-106	6988	4.03	12.49	-0.01
225	SLU 68	14	-61	6901	2.12	12.76	-0.01
225	SLU 69	13	-174	7154	6.87	12.13	-0.01
225	SLU 70	14	-108	7098	4.12	12.7	-0.01
225	SLU 71	13	-172	7104	6.79	12.02	-0.01
225	SLU 72	14	-106	7048	4.04	12.59	-0.01
225	SLU 73	16	-80	7367	2.84	13.81	-0.01
225	SLU 74	14	-192	7620	7.59	13.18	-0.01
225	SLU 75	15	-127	7564	4.84	13.75	-0.01
225	SLU 76	16	-82	7476	2.93	14.02	-0.01
225	SLU 77	14	-194	7729	7.68	13.39	-0.01
225	SLU 78	15	-129	7673	4.93	13.96	-0.01
225	SLU 79	14	-192	7679	7.6	13.28	-0.01
225	SLU 80	15	-127	7623	4.85	13.85	-0.01
225	SLU 81	14	-197	7707	7.77	13.4	-0.01
225	SLU 82	15	-132	7651	5.02	13.97	-0.01
225	SLU 83	14	-199	7816	7.86	13.61	-0.01
225	SLU 84	16	-134	7760	5.11	14.18	-0.01
225	SLE RA 1	9	-125	5171	4.92	8.65	-0.01
225	SLE RA 2	10	-52	5109	1.86	9.29	-0.01
225	SLE RA 3	9	-127	5277	5.03	8.87	-0.01
225	SLE RA 4	10	-84	5240	3.19	9.25	-0.01
225	SLE RA 5	11	-54	5182	1.92	9.43	-0.01
225	SLE RA 6	9	-129	5351	5.09	9.01	-0.01
225	SLE RA 7	10	-85	5313	3.25	9.39	-0.01
225	SLE RA 8	9	-127	5317	5.04	8.93	-0.01
225	SLE RA 9	10	-84	5280	3.2	9.31	-0.01
225	SLE RA 10	11	-66	5493	2.4	10.13	-0.01
225	SLE RA 11	10	-141	5661	5.57	9.71	-0.01
225	SLE RA 12	11	-98	5624	3.73	10.09	-0.01
225	SLE RA 13	11	-67	5566	2.46	10.27	-0.01
225	SLE RA 14	10	-142	5734	5.63	9.85	-0.01
225	SLE RA 15	11	-99	5697	3.79	10.23	-0.01
225	SLE RA 16	10	-141	5701	5.58	9.77	-0.01
225	SLE RA 17	11	-98	5664	3.74	10.16	-0.01
225	SLE RA 18	10	-145	5719	5.69	9.85	-0.01
225	SLE RA 19	11	-101	5682	3.86	10.24	-0.01
225	SLE RA 20	10	-146	5792	5.75	9.99	-0.01
225	SLE RA 21	11	-102	5755	3.92	10.38	-0.01
225	SLE FR 1	9	-125	5171	4.92	8.65	-0.01
225	SLE FR 2	9	-110	5159	4.31	8.78	-0.01

Nodo	Cont.	Reazione a traslazione			Reazione a rotazione		
Ind.	N.br.	x	y	z	x	y	z
225	SLE FR 3	9	-125	5200	4.94	8.71	-0.01
225	SLE FR 4	10	-116	5323	4.54	9.14	-0.01
225	SLE FR 5	9	-131	5365	5.18	9.07	-0.01
225	SLE FR 6	10	-135	5445	5.31	9.25	-0.01
225	SLE QP 1	9	-125	5171	4.92	8.65	-0.01
225	SLE QP 2	9	-131	5335	5.15	9.01	-0.01
225	SLD 1	18	71	6541	-3.68	13.75	-0.01
225	SLD 2	18	71	6541	-3.68	13.75	-0.01
225	SLD 3	20	-486	6640	19.99	15.39	-0.01
225	SLD 4	20	-486	6640	19.99	15.39	-0.01
225	SLD 5	8	774	5547	-33.41	7.95	0
225	SLD 6	8	774	5547	-33.41	7.95	0
225	SLD 7	16	-1082	5877	45.51	13.41	-0.01
225	SLD 8	16	-1082	5877	45.51	13.41	-0.01
225	SLD 9	2	820	4794	-35.21	4.62	0
225	SLD 10	2	820	4794	-35.21	4.62	0
225	SLD 11	11	-1036	5124	43.71	10.08	-0.01
225	SLD 12	11	-1036	5124	43.71	10.08	-0.01
225	SLD 13	-1	224	4031	-9.69	2.64	0
225	SLD 14	-1	224	4031	-9.69	2.64	0
225	SLD 15	1	-333	4130	13.99	4.28	0
225	SLD 16	1	-333	4130	13.99	4.28	0
225	SLV 1	29	335	8123	-15.23	19.82	-0.02
225	SLV 2	29	335	8123	-15.23	19.82	-0.02
225	SLV 3	35	-963	8364	39.97	23.88	-0.02
225	SLV 4	35	-963	8364	39.97	23.88	-0.02
225	SLV 5	6	1978	5806	-84.69	6.1	0
225	SLV 6	6	1978	5806	-84.69	6.1	0
225	SLV 7	26	-2349	6610	99.32	19.63	-0.02
225	SLV 8	26	-2349	6610	99.32	19.63	-0.02
225	SLV 9	-8	2088	4061	-89.02	-1.6	0.01
225	SLV 10	-8	2088	4061	-89.02	-1.6	0.01
225	SLV 11	13	-2239	4865	94.99	11.93	-0.01
225	SLV 12	13	-2239	4865	94.99	11.93	-0.01
225	SLV 13	-16	702	2306	-29.67	-5.85	0.01
225	SLV 14	-16	702	2306	-29.67	-5.85	0.01
225	SLV 15	-10	-596	2548	25.53	-1.79	0
225	SLV 16	-10	-596	2548	25.53	-1.79	0
226	SLU 1	-12	113	6139	-7.78	-2.48	-0.05
226	SLU 2	-12	188	6033	-10.88	-2.93	-0.05
226	SLU 3	-13	116	6357	-8	-2.61	-0.05
226	SLU 4	-13	161	6293	-9.86	-2.87	-0.05
226	SLU 5	-13	190	6185	-11.04	-3.01	-0.05
226	SLU 6	-13	117	6510	-8.16	-2.7	-0.05
226	SLU 7	-13	162	6446	-10.03	-2.96	-0.05
226	SLU 8	-13	117	6444	-8.1	-2.66	-0.05
226	SLU 9	-13	162	6380	-9.96	-2.92	-0.05
226	SLU 10	-15	171	6871	-10.85	-3.52	-0.06
226	SLU 11	-15	99	7195	-7.97	-3.2	-0.06
226	SLU 12	-15	144	7131	-9.83	-3.47	-0.06
226	SLU 13	-15	173	7023	-11.01	-3.61	-0.06
226	SLU 14	-15	100	7347	-8.13	-3.29	-0.06
226	SLU 15	-16	146	7283	-9.99	-3.55	-0.06
226	SLU 16	-15	100	7282	-8.07	-3.25	-0.06
226	SLU 17	-15	145	7218	-9.93	-3.52	-0.06
226	SLU 18	-16	89	7336	-7.73	-3.33	-0.06
226	SLU 19	-16	134	7272	-9.59	-3.6	-0.06
226	SLU 20	-16	91	7488	-7.9	-3.42	-0.06
226	SLU 21	-16	136	7425	-9.76	-3.69	-0.06
226	SLU 22	-14	103	6947	-7.97	-3.02	-0.06
226	SLU 23	-15	178	6840	-11.07	-3.47	-0.06
226	SLU 24	-15	105	7165	-8.19	-3.15	-0.06
226	SLU 25	-15	150	7101	-10.05	-3.41	-0.06
226	SLU 26	-15	180	6993	-11.23	-3.55	-0.06
226	SLU 27	-15	107	7317	-8.36	-3.24	-0.06
226	SLU 28	-15	152	7253	-10.22	-3.5	-0.06
226	SLU 29	-15	107	7251	-8.29	-3.2	-0.06
226	SLU 30	-15	152	7187	-10.16	-3.46	-0.06
226	SLU 31	-17	161	7678	-11.04	-4.06	-0.07
226	SLU 32	-17	88	8002	-8.16	-3.74	-0.07
226	SLU 33	-17	133	7939	-10.02	-4.01	-0.07
226	SLU 34	-17	163	7830	-11.2	-4.15	-0.07
226	SLU 35	-18	90	8155	-8.32	-3.83	-0.07
226	SLU 36	-18	135	8091	-10.19	-4.1	-0.07
226	SLU 37	-17	90	8089	-8.26	-3.79	-0.07
226	SLU 38	-18	135	8025	-10.13	-4.06	-0.07
226	SLU 39	-18	79	8144	-7.92	-3.87	-0.07
226	SLU 40	-18	124	8080	-9.79	-4.14	-0.07
226	SLU 41	-18	81	8296	-8.09	-3.96	-0.07
226	SLU 42	-18	126	8232	-9.95	-4.23	-0.07
226	SLU 43	-15	151	7704	-10.04	-3.04	-0.06
226	SLU 44	-15	226	7598	-13.15	-3.49	-0.06
226	SLU 45	-16	153	7922	-10.27	-3.17	-0.06
226	SLU 46	-16	198	7858	-12.13	-3.43	-0.06
226	SLU 47	-16	228	7750	-13.31	-3.57	-0.06
226	SLU 48	-16	155	8074	-10.43	-3.26	-0.06
226	SLU 49	-16	200	8011	-12.29	-3.52	-0.06
226	SLU 50	-16	155	8009	-10.37	-3.22	-0.06
226	SLU 51	-16	200	7945	-12.23	-3.48	-0.06
226	SLU 52	-18	209	8436	-13.12	-4.08	-0.07
226	SLU 53	-18	136	8760	-10.24	-3.76	-0.07

Nodo	Cont.	Reazione a traslazione			Reazione a rotazione		
Ind.	N.br.	x	y	z	x	y	z
226	SLU 54	-18	181	8696	-12.1	-4.03	-0.07
226	SLU 55	-18	211	8588	-13.28	-4.17	-0.07
226	SLU 56	-18	138	8912	-10.4	-3.85	-0.07
226	SLU 57	-18	183	8848	-12.26	-4.12	-0.07
226	SLU 58	-18	138	8847	-10.34	-3.81	-0.07
226	SLU 59	-18	183	8783	-12.2	-4.08	-0.07
226	SLU 60	-18	127	8901	-10	-3.89	-0.07
226	SLU 61	-19	172	8837	-11.86	-4.16	-0.07
226	SLU 62	-19	128	9053	-10.16	-3.98	-0.07
226	SLU 63	-19	173	8989	-12.02	-4.25	-0.07
226	SLU 64	-17	141	8512	-10.24	-3.59	-0.07
226	SLU 65	-17	216	8405	-13.34	-4.03	-0.07
226	SLU 66	-18	143	8730	-10.46	-3.71	-0.07
226	SLU 67	-18	188	8666	-12.32	-3.97	-0.07
226	SLU 68	-18	218	8557	-13.5	-4.11	-0.07
226	SLU 69	-18	145	8882	-10.62	-3.8	-0.07
226	SLU 70	-18	190	8818	-12.48	-4.06	-0.07
226	SLU 71	-18	144	8816	-10.56	-3.76	-0.07
226	SLU 72	-18	189	8752	-12.42	-4.02	-0.07
226	SLU 73	-20	199	9243	-13.31	-4.62	-0.08
226	SLU 74	-20	126	9567	-10.43	-4.3	-0.08
226	SLU 75	-20	171	9504	-12.29	-4.57	-0.08
226	SLU 76	-20	201	9395	-13.47	-4.71	-0.08
226	SLU 77	-21	128	9720	-10.59	-4.39	-0.08
226	SLU 78	-21	173	9656	-12.45	-4.66	-0.08
226	SLU 79	-20	127	9654	-10.53	-4.35	-0.08
226	SLU 80	-20	172	9590	-12.39	-4.62	-0.08
226	SLU 81	-21	116	9708	-10.19	-4.43	-0.08
226	SLU 82	-21	161	9645	-12.05	-4.7	-0.08
226	SLU 83	-21	118	9861	-10.35	-4.52	-0.08
226	SLU 84	-21	163	9797	-12.22	-4.79	-0.08
226	SLE RA 1	-13	110	6370	-7.83	-2.64	-0.05
226	SLE RA 2	-13	160	6299	-9.9	-2.93	-0.05
226	SLE RA 3	-13	112	6515	-7.98	-2.72	-0.05
226	SLE RA 4	-13	142	6473	-9.22	-2.9	-0.05
226	SLE RA 5	-13	162	6400	-10.01	-2.99	-0.05
226	SLE RA 6	-13	113	6617	-8.09	-2.78	-0.05
226	SLE RA 7	-13	143	6574	-9.33	-2.96	-0.05
226	SLE RA 8	-13	113	6573	-8.05	-2.75	-0.05
226	SLE RA 9	-13	143	6530	-9.29	-2.93	-0.05
226	SLE RA 10	-15	149	6858	-9.88	-3.33	-0.06
226	SLE RA 11	-15	101	7074	-7.96	-3.12	-0.06
226	SLE RA 12	-15	131	7031	-9.2	-3.3	-0.06
226	SLE RA 13	-15	150	6959	-9.99	-3.39	-0.06
226	SLE RA 14	-15	102	7175	-8.07	-3.18	-0.06
226	SLE RA 15	-15	132	7133	-9.31	-3.35	-0.06
226	SLE RA 16	-15	102	7132	-8.03	-3.15	-0.06
226	SLE RA 17	-15	132	7089	-9.27	-3.33	-0.06
226	SLE RA 18	-15	94	7168	-7.8	-3.21	-0.06
226	SLE RA 19	-15	124	7125	-9.04	-3.38	-0.06
226	SLE RA 20	-15	96	7269	-7.91	-3.26	-0.06
226	SLE RA 21	-15	126	7227	-9.15	-3.44	-0.06
226	SLE FR 1	-13	110	6370	-7.83	-2.64	-0.05
226	SLE FR 2	-13	120	6356	-8.24	-2.7	-0.05
226	SLE FR 3	-13	111	6411	-7.87	-2.66	-0.05
226	SLE FR 4	-14	116	6595	-8.24	-2.87	-0.05
226	SLE FR 5	-14	106	6650	-7.87	-2.83	-0.05
226	SLE FR 6	-14	102	6769	-7.82	-2.92	-0.06
226	SLE QP 1	-13	110	6370	-7.83	-2.64	-0.05
226	SLE QP 2	-13	106	6609	-7.82	-2.81	-0.05
226	SLD 1	-1	647	4767	-29.13	2.3	-0.03
226	SLD 2	-1	647	4767	-29.13	2.3	-0.03
226	SLD 3	-8	126	4576	-6.9	-0.8	-0.02
226	SLD 4	-8	126	4576	-6.9	-0.8	-0.02
226	SLD 5	1	1057	6347	-47.92	3.43	-0.06
226	SLD 6	1	1057	6347	-47.92	3.43	-0.06
226	SLD 7	-23	-678	5709	26.17	-6.91	-0.03
226	SLD 8	-23	-678	5709	26.17	-6.91	-0.03
226	SLD 9	-4	889	7510	-41.81	1.29	-0.07
226	SLD 10	-4	889	7510	-41.81	1.29	-0.07
226	SLD 11	-28	-846	6871	32.28	-9.05	-0.05
226	SLD 12	-28	-846	6871	32.28	-9.05	-0.05
226	SLD 13	-18	85	8643	-8.75	-4.81	-0.09
226	SLD 14	-18	85	8643	-8.75	-4.81	-0.09
226	SLD 15	-26	-435	8451	13.48	-7.92	-0.08
226	SLD 16	-26	-435	8451	13.48	-7.92	-0.08
226	SLV 1	16	1352	2385	-57.06	9.38	0.01
226	SLV 2	16	1352	2385	-57.06	9.38	0.01
226	SLV 3	-3	140	1933	-5.28	1.44	0.03
226	SLV 4	-3	140	1933	-5.28	1.44	0.03
226	SLV 5	24	2318	6027	-101.13	12.9	-0.06
226	SLV 6	24	2318	6027	-101.13	12.9	-0.06
226	SLV 7	-39	-1723	4521	71.48	-13.59	0
226	SLV 8	-39	-1723	4521	71.48	-13.59	0
226	SLV 9	12	1934	8698	-87.12	7.97	-0.1
226	SLV 10	12	1934	8698	-87.12	7.97	-0.1
226	SLV 11	-51	-2107	7191	85.48	-18.52	-0.05
226	SLV 12	-51	-2107	7191	85.48	-18.52	-0.05
226	SLV 13	-24	71	11286	-10.37	-7.06	-0.14
226	SLV 14	-24	71	11286	-10.37	-7.06	-0.14
226	SLV 15	-43	-1141	10834	41.41	-15	-0.12

Nodo	Cont.	Reazione a traslazione			Reazione a rotazione		
Ind.	N.br.	x	y	z	x	y	z
226	SLV 16	-43	-1141	10834	41.41	-15	-0.12
227	SLU 1	9	-181	4948	7.32	7.92	-0.01
227	SLU 2	11	-74	4857	2.8	9.37	-0.01
227	SLU 3	9	-187	5108	7.56	8.22	-0.01
227	SLU 4	10	-122	5053	4.85	9.1	-0.01
227	SLU 5	11	-76	4969	2.91	9.58	-0.01
227	SLU 6	9	-189	5220	7.67	8.43	-0.01
227	SLU 7	11	-125	5165	4.96	9.31	-0.01
227	SLU 8	9	-186	5172	7.55	8.33	-0.01
227	SLU 9	11	-122	5117	4.84	9.2	-0.01
227	SLU 10	12	-105	5420	4.05	10.55	-0.01
227	SLU 11	10	-218	5671	8.81	9.4	-0.01
227	SLU 12	12	-154	5616	6.1	10.28	-0.01
227	SLU 13	12	-108	5531	4.16	10.76	-0.01
227	SLU 14	11	-221	5783	8.93	9.61	-0.01
227	SLU 15	12	-156	5728	6.21	10.48	-0.01
227	SLU 16	10	-218	5734	8.8	9.51	-0.01
227	SLU 17	12	-153	5680	6.09	10.38	-0.01
227	SLU 18	11	-226	5752	9.11	9.6	-0.01
227	SLU 19	12	-162	5697	6.39	10.47	-0.01
227	SLU 20	11	-229	5864	9.22	9.81	-0.01
227	SLU 21	12	-164	5809	6.51	10.68	-0.01
227	SLU 22	10	-211	5505	8.51	9.06	-0.01
227	SLU 23	12	-103	5414	3.98	10.52	-0.01
227	SLU 24	10	-216	5665	8.75	9.37	-0.01
227	SLU 25	12	-152	5610	6.03	10.24	-0.01
227	SLU 26	12	-106	5526	4.1	10.72	-0.01
227	SLU 27	11	-219	5777	8.86	9.58	-0.01
227	SLU 28	12	-154	5722	6.15	10.45	-0.01
227	SLU 29	10	-216	5729	8.74	9.48	-0.01
227	SLU 30	12	-151	5674	6.02	10.35	-0.01
227	SLU 31	14	-135	5977	5.23	11.7	-0.01
227	SLU 32	12	-248	6228	10	10.55	-0.01
227	SLU 33	13	-183	6173	7.28	11.42	-0.01
227	SLU 34	14	-137	6088	5.35	11.9	-0.01
227	SLU 35	12	-250	6340	10.11	10.76	-0.01
227	SLU 36	13	-186	6285	7.4	11.63	-0.01
227	SLU 37	12	-247	6291	9.99	10.65	-0.01
227	SLU 38	13	-183	6237	7.27	11.53	-0.01
227	SLU 39	12	-256	6309	10.29	10.74	-0.01
227	SLU 40	13	-191	6254	7.58	11.62	-0.01
227	SLU 41	12	-258	6421	10.41	10.95	-0.01
227	SLU 42	13	-194	6366	7.7	11.83	-0.01
227	SLU 43	11	-226	6241	9.11	9.9	-0.01
227	SLU 44	13	-118	6150	4.59	11.35	-0.01
227	SLU 45	11	-231	6402	9.35	10.21	-0.01
227	SLU 46	13	-167	6347	6.64	11.08	-0.01
227	SLU 47	13	-120	6262	4.7	11.56	-0.01
227	SLU 48	11	-234	6513	9.46	10.41	-0.01
227	SLU 49	13	-169	6459	6.75	11.29	-0.01
227	SLU 50	11	-230	6465	9.34	10.31	-0.01
227	SLU 51	13	-166	6410	6.62	11.19	-0.01
227	SLU 52	14	-149	6713	5.84	12.53	-0.01
227	SLU 53	13	-263	6964	10.6	11.39	-0.01
227	SLU 54	14	-198	6910	7.89	12.26	-0.01
227	SLU 55	15	-152	6825	5.95	12.74	-0.01
227	SLU 56	13	-265	7076	10.72	11.59	-0.01
227	SLU 57	14	-200	7021	8	12.47	-0.01
227	SLU 58	13	-262	7028	10.59	11.49	-0.01
227	SLU 59	14	-197	6973	7.88	12.37	-0.01
227	SLU 60	13	-270	7045	10.9	11.58	-0.01
227	SLU 61	14	-206	6991	8.18	12.46	-0.01
227	SLU 62	13	-273	7157	11.01	11.79	-0.01
227	SLU 63	14	-208	7102	8.3	12.66	-0.01
227	SLU 64	12	-255	6798	10.29	11.04	-0.01
227	SLU 65	14	-148	6707	5.77	12.5	-0.01
227	SLU 66	13	-261	6958	10.53	11.35	-0.01
227	SLU 67	14	-196	6904	7.82	12.23	-0.01
227	SLU 68	15	-150	6819	5.89	12.71	-0.01
227	SLU 69	13	-263	7070	10.65	11.56	-0.01
227	SLU 70	14	-199	7016	7.94	12.43	-0.01
227	SLU 71	13	-260	7022	10.52	11.46	-0.01
227	SLU 72	14	-195	6967	7.81	12.33	-0.01
227	SLU 73	16	-179	7270	7.02	13.68	-0.01
227	SLU 74	14	-292	7521	11.79	12.53	-0.01
227	SLU 75	15	-228	7467	9.07	13.4	-0.01
227	SLU 76	16	-181	7382	7.14	13.89	-0.01
227	SLU 77	14	-294	7633	11.9	12.74	-0.01
227	SLU 78	15	-230	7578	9.19	13.61	-0.01
227	SLU 79	14	-291	7585	11.78	12.64	-0.01
227	SLU 80	15	-227	7530	9.06	13.51	-0.01
227	SLU 81	14	-300	7602	12.08	12.73	-0.01
227	SLU 82	15	-235	7548	9.37	13.6	-0.01
227	SLU 83	14	-302	7714	12.2	12.93	-0.01
227	SLU 84	16	-238	7659	9.48	13.81	-0.01
227	SLE RA 1	9	-190	5107	7.66	8.24	-0.01
227	SLE RA 2	11	-118	5046	4.64	9.21	-0.01
227	SLE RA 3	9	-193	5214	7.82	8.45	-0.01
227	SLE RA 4	10	-150	5177	6.01	9.03	-0.01
227	SLE RA 5	11	-120	5121	4.72	9.35	-0.01
227	SLE RA 6	9	-195	5288	7.9	8.59	-0.01

Nodo	Cont.	Reazione a traslazione			Reazione a rotazione		
Ind.	N.br.	x	y	z	x	y	z
227	SLE RA 7	10	-152	5252	6.09	9.17	-0.01
227	SLE RA 8	9	-193	5256	7.81	8.52	-0.01
227	SLE RA 9	10	-150	5220	6	9.1	-0.01
227	SLE RA 10	11	-139	5421	5.48	10	-0.01
227	SLE RA 11	10	-214	5589	8.65	9.23	-0.01
227	SLE RA 12	11	-171	5553	6.84	9.82	-0.01
227	SLE RA 13	12	-141	5496	5.55	10.14	-0.01
227	SLE RA 14	10	-216	5664	8.73	9.37	-0.01
227	SLE RA 15	11	-173	5627	6.92	9.96	-0.01
227	SLE RA 16	10	-214	5631	8.65	9.3	-0.01
227	SLE RA 17	11	-171	5595	6.84	9.89	-0.01
227	SLE RA 18	10	-220	5643	8.85	9.37	-0.01
227	SLE RA 19	11	-177	5607	7.04	9.95	-0.01
227	SLE RA 20	10	-221	5718	8.93	9.5	-0.01
227	SLE RA 21	11	-178	5681	7.12	10.09	-0.01
227	SLE FR 1	9	-190	5107	7.66	8.24	-0.01
227	SLE FR 2	9	-175	5095	7.05	8.44	-0.01
227	SLE FR 3	9	-190	5137	7.69	8.3	-0.01
227	SLE FR 4	10	-184	5256	7.41	8.77	-0.01
227	SLE FR 5	10	-199	5298	8.05	8.64	-0.01
227	SLE FR 6	10	-205	5375	8.25	8.8	-0.01
227	SLE QP 1	9	-190	5107	7.66	8.24	-0.01
227	SLE QP 2	9	-199	5268	8.02	8.58	-0.01
227	SLD 1	14	-17	6406	0.01	14.08	-0.01
227	SLD 2	14	-17	6406	0.01	14.08	-0.01
227	SLD 3	17	-574	6550	23.69	17.41	-0.02
227	SLD 4	17	-574	6550	23.69	17.41	-0.02
227	SLD 5	6	701	5389	-30.29	5.18	0
227	SLD 6	6	701	5389	-30.29	5.18	0
227	SLD 7	17	-1157	5872	48.62	16.28	-0.01
227	SLD 8	17	-1157	5872	48.62	16.28	-0.01
227	SLD 9	2	759	4663	-32.59	0.88	0
227	SLD 10	2	759	4663	-32.59	0.88	0
227	SLD 11	13	-1098	5146	46.32	11.98	-0.01
227	SLD 12	13	-1098	5146	46.32	11.98	-0.01
227	SLD 13	2	177	3985	-7.66	-0.25	0
227	SLD 14	2	177	3985	-7.66	-0.25	0
227	SLD 15	5	-380	4130	16.02	3.08	0
227	SLD 16	5	-380	4130	16.02	3.08	0
227	SLV 1	20	221	7895	-10.46	21.27	-0.02
227	SLV 2	20	221	7895	-10.46	21.27	-0.02
227	SLV 3	28	-1078	8243	44.72	29.54	-0.03
227	SLV 4	28	-1078	8243	44.72	29.54	-0.03
227	SLV 5	1	1897	5530	-81.22	-0.16	0
227	SLV 6	1	1897	5530	-81.22	-0.16	0
227	SLV 7	27	-2433	6687	102.72	27.41	-0.02
227	SLV 8	27	-2433	6687	102.72	27.41	-0.02
227	SLV 9	-8	2035	3849	-86.69	-10.25	0.01
227	SLV 10	-8	2035	3849	-86.69	-10.25	0.01
227	SLV 11	18	-2295	5006	97.25	17.32	-0.01
227	SLV 12	18	-2295	5006	97.25	17.32	-0.01
227	SLV 13	-9	681	2293	-28.69	-12.38	0.01
227	SLV 14	-9	681	2293	-28.69	-12.38	0.01
227	SLV 15	-1	-618	2640	26.49	-4.11	0.01
227	SLV 16	-1	-618	2640	26.49	-4.11	0.01
228	SLU 1	2	-107	5938	4.91	1.8	0.01
228	SLU 2	1	-23	5829	1.3	0.81	0.01
228	SLU 3	2	-113	6146	5.15	1.84	0.01
228	SLU 4	2	-62	6080	2.98	1.25	0.01
228	SLU 5	1	-26	5975	1.44	0.84	0.01
228	SLU 6	2	-116	6292	5.29	1.88	0.01
228	SLU 7	2	-65	6227	3.12	1.29	0.01
228	SLU 8	2	-113	6231	5.19	1.87	0.01
228	SLU 9	2	-63	6166	3.02	1.28	0.01
228	SLU 10	1	-67	6593	3.04	0.9	0.01
228	SLU 11	2	-157	6911	6.89	1.94	0.01
228	SLU 12	2	-107	6845	4.72	1.35	0.01
228	SLU 13	1	-71	6740	3.17	0.94	0.01
228	SLU 14	2	-160	7057	7.03	1.98	0.01
228	SLU 15	2	-110	6992	4.86	1.38	0.01
228	SLU 16	2	-158	6996	6.93	1.96	0.01
228	SLU 17	2	-107	6930	4.76	1.37	0.01
228	SLU 18	2	-171	7031	7.4	1.93	0.01
228	SLU 19	2	-120	6965	5.23	1.34	0.01
228	SLU 20	2	-174	7177	7.53	1.97	0.01
228	SLU 21	2	-123	7111	5.37	1.37	0.01
228	SLU 22	2	-145	6682	6.41	1.91	0.01
228	SLU 23	1	-61	6573	2.79	0.92	0.01
228	SLU 24	2	-150	6890	6.64	1.96	0.01
228	SLU 25	2	-100	6825	4.47	1.37	0.01
228	SLU 26	1	-64	6720	2.93	0.96	0.01
228	SLU 27	2	-153	7037	6.78	2	0.01
228	SLU 28	2	-103	6971	4.61	1.4	0.01
228	SLU 29	2	-151	6975	6.68	1.99	0.01
228	SLU 30	2	-101	6910	4.51	1.39	0.01
228	SLU 31	2	-105	7338	4.53	1.02	0.01
228	SLU 32	3	-195	7655	8.38	2.06	0.01
228	SLU 33	2	-144	7589	6.21	1.46	0.01
228	SLU 34	2	-108	7484	4.67	1.06	0.01
228	SLU 35	3	-198	7801	8.52	2.09	0.01
228	SLU 36	2	-147	7736	6.35	1.5	0.01

Nodo	Cont.	Reazione a traslazione			Reazione a rotazione		
Ind.	N.br.	x	y	z	x	y	z
228	SLU 37	3	-196	7740	8.42	2.08	0.01
228	SLU 38	2	-145	7675	6.25	1.49	0.01
228	SLU 39	3	-208	7775	8.89	2.05	0.01
228	SLU 40	2	-158	7709	6.72	1.45	0.01
228	SLU 41	3	-212	7921	9.03	2.09	0.01
228	SLU 42	2	-161	7856	6.86	1.49	0.01
228	SLU 43	3	-127	7464	5.88	2.29	0.01
228	SLU 44	2	-42	7355	2.26	1.3	0.01
228	SLU 45	3	-132	7672	6.11	2.34	0.01
228	SLU 46	2	-81	7607	3.94	1.75	0.01
228	SLU 47	2	-45	7502	2.4	1.34	0.01
228	SLU 48	3	-135	7819	6.25	2.38	0.01
228	SLU 49	2	-85	7753	4.08	1.79	0.01
228	SLU 50	3	-133	7757	6.15	2.37	0.01
228	SLU 51	2	-82	7692	3.99	1.77	0.01
228	SLU 52	2	-87	8120	4	1.4	0.01
228	SLU 53	3	-176	8437	7.85	2.44	0.01
228	SLU 54	2	-126	8371	5.68	1.84	0.01
228	SLU 55	2	-90	8266	4.14	1.44	0.01
228	SLU 56	3	-180	8583	7.99	2.47	0.01
228	SLU 57	2	-129	8518	5.82	1.88	0.01
228	SLU 58	3	-177	8522	7.89	2.46	0.01
228	SLU 59	2	-127	8456	5.72	1.87	0.01
228	SLU 60	3	-190	8557	8.36	2.43	0.01
228	SLU 61	2	-140	8491	6.19	1.84	0.01
228	SLU 62	3	-193	8703	8.5	2.47	0.01
228	SLU 63	2	-143	8638	6.33	1.87	0.01
228	SLU 64	3	-164	8209	7.37	2.41	0.01
228	SLU 65	2	-80	8099	3.75	1.42	0.01
228	SLU 66	3	-170	8417	7.6	2.46	0.01
228	SLU 67	2	-119	8351	5.43	1.87	0.01
228	SLU 68	2	-83	8246	3.89	1.46	0.01
228	SLU 69	3	-173	8563	7.74	2.5	0.01
228	SLU 70	3	-122	8497	5.57	1.9	0.01
228	SLU 71	3	-170	8502	7.65	2.48	0.01
228	SLU 72	2	-120	8436	5.48	1.89	0.01
228	SLU 73	2	-124	8864	5.49	1.52	0.02
228	SLU 74	3	-214	9181	9.34	2.56	0.02
228	SLU 75	3	-164	9116	7.17	1.96	0.02
228	SLU 76	2	-127	9011	5.63	1.55	0.02
228	SLU 77	3	-217	9328	9.48	2.59	0.02
228	SLU 78	3	-167	9262	7.31	2	0.02
228	SLU 79	3	-215	9266	9.38	2.58	0.02
228	SLU 80	3	-164	9201	7.21	1.99	0.02
228	SLU 81	3	-228	9301	9.85	2.55	0.02
228	SLU 82	3	-177	9235	7.68	1.95	0.02
228	SLU 83	3	-231	9448	9.99	2.58	0.02
228	SLU 84	3	-180	9382	7.82	1.99	0.02
228	SLE RA 1	2	-118	6151	5.34	1.83	0.01
228	SLE RA 2	2	-62	6078	2.93	1.17	0.01
228	SLE RA 3	2	-122	6289	5.5	1.86	0.01
228	SLE RA 4	2	-88	6246	4.05	1.47	0.01
228	SLE RA 5	2	-64	6176	3.02	1.19	0.01
228	SLE RA 6	2	-124	6387	5.59	1.89	0.01
228	SLE RA 7	2	-90	6343	4.14	1.49	0.01
228	SLE RA 8	2	-122	6346	5.53	1.88	0.01
228	SLE RA 9	2	-88	6302	4.08	1.48	0.01
228	SLE RA 10	2	-92	6588	4.09	1.23	0.01
228	SLE RA 11	2	-151	6799	6.66	1.92	0.01
228	SLE RA 12	2	-118	6755	5.21	1.53	0.01
228	SLE RA 13	2	-94	6685	4.18	1.26	0.01
228	SLE RA 14	2	-153	6897	6.75	1.95	0.01
228	SLE RA 15	2	-120	6853	5.3	1.55	0.01
228	SLE RA 16	2	-152	6856	6.68	1.94	0.01
228	SLE RA 17	2	-118	6812	5.24	1.55	0.01
228	SLE RA 18	2	-160	6879	6.99	1.92	0.01
228	SLE RA 19	2	-127	6835	5.55	1.52	0.01
228	SLE RA 20	2	-162	6977	7.09	1.94	0.01
228	SLE RA 21	2	-129	6933	5.64	1.55	0.01
228	SLE FR 1	2	-118	6151	5.34	1.83	0.01
228	SLE FR 2	2	-107	6136	4.86	1.7	0.01
228	SLE FR 3	2	-119	6190	5.38	1.84	0.01
228	SLE FR 4	2	-120	6355	5.35	1.72	0.01
228	SLE FR 5	2	-132	6408	5.87	1.87	0.01
228	SLE FR 6	2	-139	6515	6.17	1.87	0.01
228	SLE QP 1	2	-118	6151	5.34	1.83	0.01
228	SLE QP 2	2	-131	6369	5.84	1.86	0.01
228	SLD 1	1	385	4758	-15.1	9.05	0
228	SLD 2	1	385	4758	-15.1	9.05	0
228	SLD 3	-9	-142	4624	7.4	4.22	-0.01
228	SLD 4	-9	-142	4624	7.4	4.22	-0.01
228	SLD 5	16	824	6088	-34.58	11.34	0.01
228	SLD 6	16	824	6088	-34.58	11.34	0.01
228	SLD 7	-15	-934	5644	40.44	-4.77	0
228	SLD 8	-15	-934	5644	40.44	-4.77	0
228	SLD 9	20	673	7095	-28.77	8.48	0.02
228	SLD 10	20	673	7095	-28.77	8.48	0.02
228	SLD 11	-11	-1086	6651	46.26	-7.63	0.01
228	SLD 12	-11	-1086	6651	46.26	-7.63	0.01
228	SLD 13	13	-119	8114	4.27	-0.5	0.03
228	SLD 14	13	-119	8114	4.27	-0.5	0.03

Nodo	Cont.	Reazione a traslazione			Reazione a rotazione		
Ind.	N.br.	x	y	z	x	y	z
228	SLD 15	4	-647	7981	26.78	-5.34	0.02
228	SLD 16	4	-647	7981	26.78	-5.34	0.02
228	SLV 1	-2	1059	2663	-42.5	19.3	-0.02
228	SLV 2	-2	1059	2663	-42.5	19.3	-0.02
228	SLV 3	-26	-171	2346	9.97	6.93	-0.03
228	SLV 4	-26	-171	2346	9.97	6.93	-0.03
228	SLV 5	37	2091	5739	-88.24	25.84	0.01
228	SLV 6	37	2091	5739	-88.24	25.84	0.01
228	SLV 7	-42	-2008	4681	86.66	-15.38	-0.02
228	SLV 8	-42	-2008	4681	86.66	-15.38	-0.02
228	SLV 9	47	1746	8057	-74.98	19.09	0.04
228	SLV 10	47	1746	8057	-74.98	19.09	0.04
228	SLV 11	-33	-2353	7000	99.92	-22.13	0.01
228	SLV 12	-33	-2353	7000	99.92	-22.13	0.01
228	SLV 13	30	-91	10393	1.7	-3.22	0.05
228	SLV 14	30	-91	10393	1.7	-3.22	0.05
228	SLV 15	6	-1320	10075	54.17	-15.58	0.04
228	SLV 16	6	-1320	10075	54.17	-15.58	0.04
229	SLU 1	2	485	1729	-12	0.76	-0.14
229	SLU 2	2	484	1726	-11.99	0.75	-0.14
229	SLU 3	2	493	1756	-12.21	0.78	-0.15
229	SLU 4	2	492	1754	-12.2	0.77	-0.15
229	SLU 5	2	483	1720	-11.99	0.76	-0.14
229	SLU 6	2	492	1750	-12.21	0.78	-0.15
229	SLU 7	2	492	1748	-12.2	0.78	-0.15
229	SLU 8	2	483	1718	-12.01	0.77	-0.14
229	SLU 9	2	483	1716	-12	0.77	-0.14
229	SLU 10	2	567	2020	-14.04	0.94	-0.18
229	SLU 11	2	575	2050	-14.26	0.97	-0.18
229	SLU 12	2	575	2048	-14.25	0.96	-0.18
229	SLU 13	2	566	2015	-14.04	0.95	-0.18
229	SLU 14	2	575	2044	-14.26	0.97	-0.18
229	SLU 15	2	574	2042	-14.25	0.97	-0.18
229	SLU 16	2	566	2012	-14.05	0.96	-0.18
229	SLU 17	2	566	2010	-14.04	0.96	-0.18
229	SLU 18	3	603	2150	-14.93	1.03	-0.19
229	SLU 19	3	603	2148	-14.92	1.03	-0.19
229	SLU 20	3	602	2144	-14.93	1.04	-0.19
229	SLU 21	3	602	2142	-14.92	1.03	-0.19
229	SLU 22	2	571	2039	-14.12	0.93	-0.17
229	SLU 23	2	570	2035	-14.11	0.93	-0.17
229	SLU 24	2	579	2065	-14.33	0.95	-0.18
229	SLU 25	2	579	2063	-14.32	0.95	-0.18
229	SLU 26	2	570	2030	-14.11	0.93	-0.17
229	SLU 27	2	578	2059	-14.33	0.95	-0.18
229	SLU 28	2	578	2057	-14.32	0.95	-0.18
229	SLU 29	2	570	2027	-14.13	0.94	-0.18
229	SLU 30	2	569	2025	-14.12	0.94	-0.18
229	SLU 31	3	653	2330	-16.16	1.12	-0.21
229	SLU 32	3	662	2360	-16.38	1.14	-0.21
229	SLU 33	3	661	2358	-16.37	1.13	-0.21
229	SLU 34	3	652	2324	-16.16	1.12	-0.21
229	SLU 35	3	661	2354	-16.38	1.14	-0.21
229	SLU 36	3	661	2352	-16.37	1.14	-0.21
229	SLU 37	3	652	2322	-16.17	1.13	-0.21
229	SLU 38	3	652	2320	-16.16	1.13	-0.21
229	SLU 39	3	689	2459	-17.05	1.2	-0.23
229	SLU 40	3	689	2457	-17.04	1.2	-0.23
229	SLU 41	3	689	2454	-17.05	1.21	-0.23
229	SLU 42	3	688	2452	-17.04	1.21	-0.23
229	SLU 43	2	601	2142	-14.88	0.93	-0.17
229	SLU 44	2	600	2139	-14.86	0.92	-0.17
229	SLU 45	2	609	2168	-15.09	0.95	-0.18
229	SLU 46	2	608	2166	-15.08	0.94	-0.18
229	SLU 47	2	599	2133	-14.87	0.93	-0.17
229	SLU 48	2	608	2163	-15.09	0.95	-0.18
229	SLU 49	2	607	2161	-15.08	0.95	-0.18
229	SLU 50	2	599	2131	-14.88	0.94	-0.18
229	SLU 51	2	599	2129	-14.87	0.94	-0.18
229	SLU 52	3	683	2433	-16.91	1.11	-0.21
229	SLU 53	3	691	2463	-17.13	1.14	-0.21
229	SLU 54	3	691	2461	-17.12	1.13	-0.21
229	SLU 55	3	682	2427	-16.91	1.12	-0.21
229	SLU 56	3	691	2457	-17.13	1.14	-0.21
229	SLU 57	3	690	2455	-17.13	1.14	-0.21
229	SLU 58	3	682	2425	-16.93	1.13	-0.21
229	SLU 59	3	681	2423	-16.92	1.13	-0.21
229	SLU 60	3	719	2563	-17.8	1.2	-0.23
229	SLU 61	3	719	2561	-17.8	1.2	-0.22
229	SLU 62	3	718	2557	-17.81	1.21	-0.23
229	SLU 63	3	718	2555	-17.8	1.2	-0.23
229	SLU 64	3	687	2451	-17	1.1	-0.21
229	SLU 65	3	686	2448	-16.98	1.1	-0.21
229	SLU 66	3	695	2478	-17.21	1.12	-0.21
229	SLU 67	3	695	2476	-17.2	1.11	-0.21
229	SLU 68	3	686	2442	-16.98	1.1	-0.21
229	SLU 69	3	694	2472	-17.21	1.12	-0.21
229	SLU 70	3	694	2470	-17.2	1.12	-0.21
229	SLU 71	3	685	2440	-17	1.11	-0.21
229	SLU 72	3	685	2438	-16.99	1.11	-0.21
229	SLU 73	3	769	2743	-19.03	1.29	-0.24

Nodo	Cont.	Reazione a traslazione			Reazione a rotazione		
Ind.	N.br.	x	y	z	x	y	z
229	SLU 74	3	778	2772	-19.25	1.31	-0.25
229	SLU 75	3	777	2770	-19.24	1.3	-0.24
229	SLU 76	3	768	2737	-19.03	1.29	-0.24
229	SLU 77	3	777	2767	-19.25	1.31	-0.25
229	SLU 78	3	776	2765	-19.24	1.31	-0.25
229	SLU 79	3	768	2734	-19.05	1.3	-0.24
229	SLU 80	3	768	2732	-19.04	1.3	-0.24
229	SLU 81	3	805	2872	-19.92	1.37	-0.26
229	SLU 82	3	805	2870	-19.92	1.37	-0.26
229	SLU 83	3	804	2866	-19.92	1.38	-0.26
229	SLU 84	3	804	2864	-19.92	1.37	-0.26
229	SLE RA 1	2	510	1818	-12.61	0.81	-0.15
229	SLE RA 2	2	509	1815	-12.6	0.81	-0.15
229	SLE RA 3	2	515	1835	-12.75	0.82	-0.15
229	SLE RA 4	2	515	1834	-12.74	0.82	-0.15
229	SLE RA 5	2	509	1812	-12.6	0.81	-0.15
229	SLE RA 6	2	514	1832	-12.75	0.82	-0.15
229	SLE RA 7	2	514	1830	-12.74	0.82	-0.15
229	SLE RA 8	2	508	1810	-12.61	0.82	-0.15
229	SLE RA 9	2	508	1809	-12.6	0.81	-0.15
229	SLE RA 10	2	564	2012	-13.97	0.93	-0.17
229	SLE RA 11	2	570	2032	-14.11	0.95	-0.18
229	SLE RA 12	2	570	2030	-14.11	0.94	-0.18
229	SLE RA 13	2	564	2008	-13.97	0.94	-0.18
229	SLE RA 14	2	569	2028	-14.11	0.95	-0.18
229	SLE RA 15	2	569	2026	-14.11	0.95	-0.18
229	SLE RA 16	2	564	2006	-13.98	0.94	-0.18
229	SLE RA 17	2	563	2005	-13.97	0.94	-0.18
229	SLE RA 18	2	588	2098	-14.56	0.99	-0.19
229	SLE RA 19	2	588	2097	-14.55	0.99	-0.19
229	SLE RA 20	2	588	2094	-14.56	0.99	-0.19
229	SLE RA 21	2	587	2093	-14.56	0.99	-0.19
229	SLE FR 1	2	510	1818	-12.61	0.81	-0.15
229	SLE FR 2	2	509	1817	-12.61	0.81	-0.15
229	SLE FR 3	2	509	1816	-12.61	0.81	-0.15
229	SLE FR 4	2	533	1901	-13.19	0.86	-0.16
229	SLE FR 5	2	533	1900	-13.2	0.86	-0.16
229	SLE FR 6	2	549	1958	-13.59	0.9	-0.17
229	SLE QP 1	2	510	1818	-12.61	0.81	-0.15
229	SLE QP 2	2	533	1902	-13.2	0.86	-0.16
229	SLD 1	1	488	1676	-12.85	0.62	-0.12
229	SLD 2	1	488	1676	-12.85	0.62	-0.12
229	SLD 3	7	154	602	-2.66	2.55	-0.48
229	SLD 4	7	154	602	-2.66	2.55	-0.48
229	SLD 5	-6	1025	3463	-28.56	-2.15	0.41
229	SLD 6	-6	1025	3463	-28.56	-2.15	0.41
229	SLD 7	12	-86	-117	5.43	4.31	-0.82
229	SLD 8	12	-86	-117	5.43	4.31	-0.82
229	SLD 9	-7	1152	3921	-31.82	-2.58	0.49
229	SLD 10	-7	1152	3921	-31.82	-2.58	0.49
229	SLD 11	10	41	341	2.16	3.88	-0.73
229	SLD 12	10	41	341	2.16	3.88	-0.73
229	SLD 13	-2	912	3202	-23.73	-0.83	0.16
229	SLD 14	-2	912	3202	-23.73	-0.83	0.16
229	SLD 15	3	579	2128	-13.54	1.11	-0.21
229	SLD 16	3	579	2128	-13.54	1.11	-0.21
229	SLV 1	0	422	1360	-12.24	0.08	-0.02
229	SLV 2	0	422	1360	-12.24	0.08	-0.02
229	SLV 3	13	-372	-1198	12.01	4.96	-0.94
229	SLV 4	13	-372	-1198	12.01	4.96	-0.94
229	SLV 5	-19	1704	5619	-49.69	-6.77	1.28
229	SLV 6	-19	1704	5619	-49.69	-6.77	1.28
229	SLV 7	26	-942	-2908	31.14	9.49	-1.8
229	SLV 8	26	-942	-2908	31.14	9.49	-1.8
229	SLV 9	-21	2009	6711	-57.53	-7.77	1.47
229	SLV 10	-21	2009	6711	-57.53	-7.77	1.47
229	SLV 11	23	-637	-1815	23.29	8.5	-1.61
229	SLV 12	23	-637	-1815	23.29	8.5	-1.61
229	SLV 13	-9	1438	5002	-38.4	-3.23	0.62
229	SLV 14	-9	1438	5002	-38.4	-3.23	0.62
229	SLV 15	4	645	2444	-14.15	1.65	-0.31
229	SLV 16	4	645	2444	-14.15	1.65	-0.31
230	SLU 1	9	-234	4883	9.59	7.67	-0.01
230	SLU 2	11	-129	4793	5.17	9.37	-0.01
230	SLU 3	9	-241	5044	9.9	7.97	-0.01
230	SLU 4	11	-178	4990	7.25	8.99	-0.01
230	SLU 5	11	-132	4908	5.31	9.58	-0.01
230	SLU 6	10	-244	5158	10.04	8.18	-0.01
230	SLU 7	11	-181	5105	7.39	9.2	-0.01
230	SLU 8	9	-240	5112	9.87	8.08	-0.01
230	SLU 9	11	-177	5058	7.22	9.1	-0.01
230	SLU 10	12	-169	5342	6.76	10.47	-0.01
230	SLU 11	11	-281	5592	11.49	9.07	-0.01
230	SLU 12	12	-218	5538	8.84	10.09	-0.01
230	SLU 13	13	-172	5456	6.9	10.68	-0.01
230	SLU 14	11	-283	5706	11.63	9.28	-0.01
230	SLU 15	12	-221	5653	8.98	10.3	-0.01
230	SLU 16	11	-279	5660	11.46	9.18	-0.01
230	SLU 17	12	-216	5606	8.81	10.21	-0.01
230	SLU 18	11	-290	5666	11.86	9.24	-0.01
230	SLU 19	12	-227	5613	9.21	10.26	-0.01

Nodo	Cont.	Reazione a traslazione			Reazione a rotazione		
Ind.	N.br.	x	y	z	x	y	z
230	SLU 20	11	-293	5781	12	9.45	-0.01
230	SLU 21	12	-230	5727	9.35	10.47	-0.01
230	SLU 22	10	-271	5428	11.1	8.74	-0.01
230	SLU 23	12	-166	5339	6.69	10.44	-0.01
230	SLU 24	11	-278	5589	11.41	9.04	-0.01
230	SLU 25	12	-215	5535	8.76	10.06	-0.01
230	SLU 26	13	-169	5453	6.82	10.65	-0.01
230	SLU 27	11	-281	5703	11.55	9.25	-0.01
230	SLU 28	12	-218	5650	8.9	10.27	-0.01
230	SLU 29	11	-277	5657	11.38	9.16	-0.01
230	SLU 30	12	-214	5603	8.73	10.18	-0.01
230	SLU 31	14	-206	5887	8.27	11.55	-0.01
230	SLU 32	12	-318	6137	13	10.15	-0.01
230	SLU 33	13	-255	6083	10.35	11.17	-0.01
230	SLU 34	14	-209	6001	8.41	11.75	-0.01
230	SLU 35	12	-321	6251	13.14	10.35	-0.01
230	SLU 36	13	-258	6198	10.49	11.37	-0.01
230	SLU 37	12	-316	6205	12.97	10.26	-0.01
230	SLU 38	13	-253	6151	10.32	11.28	-0.01
230	SLU 39	12	-327	6211	13.37	10.32	-0.01
230	SLU 40	13	-264	6158	10.72	11.34	-0.01
230	SLU 41	12	-330	6326	13.51	10.53	-0.01
230	SLU 42	14	-267	6272	10.86	11.55	-0.01
230	SLU 43	11	-292	6161	11.95	9.6	-0.01
230	SLU 44	13	-187	6071	7.53	11.3	-0.01
230	SLU 45	12	-299	6322	12.26	9.9	-0.01
230	SLU 46	13	-236	6268	9.61	10.92	-0.01
230	SLU 47	14	-190	6186	7.67	11.51	-0.01
230	SLU 48	12	-302	6436	12.4	10.11	-0.01
230	SLU 49	13	-239	6382	9.75	11.13	-0.01
230	SLU 50	12	-298	6390	12.23	10.01	-0.01
230	SLU 51	13	-235	6336	9.58	11.03	-0.01
230	SLU 52	15	-226	6620	9.12	12.4	-0.01
230	SLU 53	13	-338	6870	13.85	11	-0.01
230	SLU 54	14	-275	6816	11.2	12.02	-0.01
230	SLU 55	15	-229	6734	9.26	12.61	-0.01
230	SLU 56	13	-341	6984	13.99	11.21	-0.01
230	SLU 57	14	-278	6931	11.34	12.23	-0.01
230	SLU 58	13	-337	6938	13.82	11.12	-0.01
230	SLU 59	14	-274	6884	11.17	12.14	-0.01
230	SLU 60	13	-348	6944	14.22	11.17	-0.01
230	SLU 61	14	-285	6890	11.57	12.19	-0.01
230	SLU 62	13	-351	7059	14.36	11.38	-0.01
230	SLU 63	15	-288	7005	11.71	12.4	-0.01
230	SLU 64	13	-329	6706	13.46	10.68	-0.01
230	SLU 65	15	-224	6616	9.04	12.38	-0.01
230	SLU 66	13	-336	6867	13.77	10.98	-0.01
230	SLU 67	14	-273	6813	11.12	12	-0.01
230	SLU 68	15	-227	6731	9.18	12.58	-0.01
230	SLU 69	13	-339	6981	13.91	11.18	-0.01
230	SLU 70	14	-276	6928	11.26	12.2	-0.01
230	SLU 71	13	-335	6935	13.74	11.09	-0.01
230	SLU 72	14	-272	6881	11.09	12.11	-0.01
230	SLU 73	16	-263	7165	10.63	13.48	-0.01
230	SLU 74	14	-375	7415	15.36	12.08	-0.01
230	SLU 75	15	-312	7361	12.71	13.1	-0.01
230	SLU 76	16	-266	7279	10.77	13.69	-0.01
230	SLU 77	14	-378	7529	15.5	12.29	-0.01
230	SLU 78	16	-315	7476	12.85	13.31	-0.01
230	SLU 79	14	-374	7483	15.33	12.19	-0.01
230	SLU 80	16	-311	7429	12.68	13.21	-0.01
230	SLU 81	14	-385	7489	15.73	12.25	-0.01
230	SLU 82	16	-322	7436	13.08	13.27	-0.01
230	SLU 83	15	-388	7604	15.87	12.46	-0.01
230	SLU 84	16	-325	7550	13.22	13.48	-0.01
230	SLE RA 1	9	-245	5039	10.02	7.98	-0.01
230	SLE RA 2	11	-175	4979	7.08	9.11	-0.01
230	SLE RA 3	10	-249	5146	10.23	8.18	-0.01
230	SLE RA 4	10	-208	5110	8.46	8.86	-0.01
230	SLE RA 5	11	-177	5055	7.17	9.25	-0.01
230	SLE RA 6	10	-251	5222	10.32	8.31	-0.01
230	SLE RA 7	11	-210	5186	8.55	8.99	-0.01
230	SLE RA 8	10	-249	5191	10.21	8.25	-0.01
230	SLE RA 9	11	-207	5155	8.44	8.93	-0.01
230	SLE RA 10	12	-201	5345	8.14	9.84	-0.01
230	SLE RA 11	10	-276	5511	11.29	8.91	-0.01
230	SLE RA 12	11	-234	5476	9.52	9.59	-0.01
230	SLE RA 13	12	-203	5421	8.23	9.98	-0.01
230	SLE RA 14	11	-278	5588	11.38	9.05	-0.01
230	SLE RA 15	11	-236	5552	9.61	9.73	-0.01
230	SLE RA 16	11	-275	5557	11.27	8.99	-0.01
230	SLE RA 17	11	-233	5521	9.5	9.67	-0.01
230	SLE RA 18	11	-282	5561	11.54	9.02	-0.01
230	SLE RA 19	11	-240	5525	9.77	9.7	-0.01
230	SLE RA 20	11	-284	5637	11.63	9.16	-0.01
230	SLE RA 21	12	-242	5601	9.86	9.84	-0.01
230	SLE FR 1	9	-245	5039	10.02	7.98	-0.01
230	SLE FR 2	10	-231	5027	9.44	8.2	-0.01
230	SLE FR 3	9	-246	5069	10.06	8.03	-0.01
230	SLE FR 4	10	-242	5183	9.89	8.52	-0.01
230	SLE FR 5	10	-257	5226	10.52	8.35	-0.01

Nodo	Cont.	Reazione a traslazione			Reazione a rotazione		
Ind.	N.br.	x	y	z	x	y	z
230	SLE FR 6	10	-263	5300	10.78	8.5	-0.01
230	SLE QP 1	9	-245	5039	10.02	7.98	-0.01
230	SLE QP 2	10	-256	5195	10.48	8.29	-0.01
230	SLD 1	14	-88	6256	3.02	16.4	-0.02
230	SLD 2	14	-88	6256	3.02	16.4	-0.02
230	SLD 3	18	-645	6459	26.69	21.38	-0.02
230	SLD 4	18	-645	6459	26.69	21.38	-0.02
230	SLD 5	5	639	5207	-27.67	3.16	0
230	SLD 6	5	639	5207	-27.67	3.16	0
230	SLD 7	19	-1217	5881	51.25	19.78	-0.02
230	SLD 8	19	-1217	5881	51.25	19.78	-0.02
230	SLD 9	1	705	4509	-30.3	-3.2	0
230	SLD 10	1	705	4509	-30.3	-3.2	0
230	SLD 11	15	-1151	5184	48.63	13.42	-0.01
230	SLD 12	15	-1151	5184	48.63	13.42	-0.01
230	SLD 13	1	133	3932	-5.74	-4.8	0.01
230	SLD 14	1	133	3932	-5.74	-4.8	0.01
230	SLD 15	5	-424	4134	17.94	0.18	0
230	SLD 16	5	-424	4134	17.94	0.18	0
230	SLV 1	20	131	7641	-6.77	27.25	-0.03
230	SLV 2	20	131	7641	-6.77	27.25	-0.03
230	SLV 3	30	-1166	8122	48.42	39.65	-0.04
230	SLV 4	30	-1166	8122	48.42	39.65	-0.04
230	SLV 5	-3	1828	5200	-78.4	-4.83	0
230	SLV 6	-3	1828	5200	-78.4	-4.83	0
230	SLV 7	32	-2497	6802	105.57	36.51	-0.03
230	SLV 8	32	-2497	6802	105.57	36.51	-0.03
230	SLV 9	-12	1985	3588	-84.61	-19.93	0.02
230	SLV 10	-12	1985	3588	-84.61	-19.93	0.02
230	SLV 11	23	-2340	5191	99.36	21.41	-0.01
230	SLV 12	23	-2340	5191	99.36	21.41	-0.01
230	SLV 13	-11	654	2268	-27.47	-23.07	0.03
230	SLV 14	-11	654	2268	-27.47	-23.07	0.03
230	SLV 15	0	-643	2749	27.72	-10.67	0.02
230	SLV 16	0	-643	2749	27.72	-10.67	0.02
231	SLU 1	8	205	875	-3.52	5.95	-0.96
231	SLU 2	7	198	849	-3.33	5.81	-0.94
231	SLU 3	8	210	896	-3.58	6.17	-1
231	SLU 4	8	205	880	-3.47	6.09	-0.99
231	SLU 5	8	201	864	-3.38	5.95	-0.96
231	SLU 6	8	213	911	-3.64	6.31	-1.02
231	SLU 7	8	209	895	-3.52	6.23	-1.01
231	SLU 8	8	212	905	-3.63	6.23	-1.01
231	SLU 9	8	208	890	-3.51	6.14	-1
231	SLU 10	9	212	920	-3.37	6.7	-1.08
231	SLU 11	9	224	966	-3.62	7.06	-1.14
231	SLU 12	9	219	951	-3.51	6.97	-1.13
231	SLU 13	9	215	935	-3.42	6.83	-1.11
231	SLU 14	9	227	981	-3.67	7.2	-1.17
231	SLU 15	9	223	966	-3.56	7.11	-1.15
231	SLU 16	9	226	976	-3.66	7.12	-1.15
231	SLU 17	9	222	960	-3.55	7.03	-1.14
231	SLU 18	9	225	975	-3.58	7.22	-1.17
231	SLU 19	9	221	960	-3.46	7.13	-1.15
231	SLU 20	9	228	991	-3.63	7.36	-1.19
231	SLU 21	9	224	975	-3.51	7.27	-1.18
231	SLU 22	9	222	954	-3.66	6.87	-1.11
231	SLU 23	9	215	928	-3.46	6.73	-1.09
231	SLU 24	9	226	975	-3.72	7.09	-1.15
231	SLU 25	9	222	959	-3.6	7.01	-1.13
231	SLU 26	9	218	943	-3.52	6.87	-1.11
231	SLU 27	9	230	990	-3.77	7.23	-1.17
231	SLU 28	9	225	975	-3.65	7.14	-1.16
231	SLU 29	9	228	984	-3.76	7.15	-1.16
231	SLU 30	9	224	969	-3.64	7.06	-1.14
231	SLU 31	10	229	999	-3.5	7.61	-1.23
231	SLU 32	10	240	1045	-3.75	7.98	-1.29
231	SLU 33	10	236	1030	-3.64	7.89	-1.28
231	SLU 34	10	232	1014	-3.55	7.75	-1.26
231	SLU 35	10	243	1061	-3.81	8.12	-1.31
231	SLU 36	10	239	1045	-3.69	8.03	-1.3
231	SLU 37	10	242	1055	-3.8	8.03	-1.3
231	SLU 38	10	238	1040	-3.68	7.95	-1.29
231	SLU 39	10	242	1055	-3.71	8.14	-1.32
231	SLU 40	10	237	1039	-3.59	8.05	-1.3
231	SLU 41	11	245	1070	-3.76	8.28	-1.34
231	SLU 42	10	241	1055	-3.65	8.19	-1.33
231	SLU 43	10	261	1110	-4.53	7.42	-1.2
231	SLU 44	9	254	1084	-4.34	7.28	-1.18
231	SLU 45	10	266	1131	-4.6	7.64	-1.24
231	SLU 46	10	261	1115	-4.48	7.56	-1.22
231	SLU 47	10	257	1099	-4.39	7.42	-1.2
231	SLU 48	10	269	1146	-4.65	7.78	-1.26
231	SLU 49	10	265	1131	-4.53	7.7	-1.25
231	SLU 50	10	268	1140	-4.64	7.7	-1.25
231	SLU 51	10	263	1125	-4.52	7.62	-1.23
231	SLU 52	10	268	1155	-4.38	8.17	-1.32
231	SLU 53	11	279	1201	-4.63	8.53	-1.38
231	SLU 54	11	275	1186	-4.52	8.44	-1.37
231	SLU 55	11	271	1170	-4.43	8.31	-1.34
231	SLU 56	11	283	1217	-4.68	8.67	-1.4

Nodo	Cont.	Reazione a traslazione			Reazione a rotazione		
Ind.	N.br.	x	y	z	x	y	z
231	SLU 57	11	279	1201	-4.57	8.58	-1.39
231	SLU 58	11	282	1211	-4.67	8.59	-1.39
231	SLU 59	11	277	1196	-4.56	8.5	-1.38
231	SLU 60	11	281	1211	-4.59	8.69	-1.41
231	SLU 61	11	277	1195	-4.47	8.6	-1.39
231	SLU 62	11	284	1226	-4.64	8.83	-1.43
231	SLU 63	11	280	1211	-4.52	8.74	-1.42
231	SLU 64	11	278	1189	-4.67	8.34	-1.35
231	SLU 65	10	270	1163	-4.47	8.2	-1.33
231	SLU 66	11	282	1210	-4.73	8.56	-1.39
231	SLU 67	11	278	1195	-4.61	8.48	-1.37
231	SLU 68	11	274	1179	-4.53	8.34	-1.35
231	SLU 69	11	285	1225	-4.78	8.7	-1.41
231	SLU 70	11	281	1210	-4.66	8.62	-1.4
231	SLU 71	11	284	1219	-4.77	8.62	-1.4
231	SLU 72	11	280	1204	-4.65	8.53	-1.38
231	SLU 73	12	284	1234	-4.51	9.09	-1.47
231	SLU 74	12	296	1281	-4.77	9.45	-1.53
231	SLU 75	12	292	1265	-4.65	9.36	-1.52
231	SLU 76	12	288	1249	-4.56	9.22	-1.49
231	SLU 77	12	299	1296	-4.82	9.59	-1.55
231	SLU 78	12	295	1280	-4.7	9.5	-1.54
231	SLU 79	12	298	1290	-4.81	9.51	-1.54
231	SLU 80	12	294	1275	-4.69	9.42	-1.53
231	SLU 81	12	297	1290	-4.72	9.61	-1.56
231	SLU 82	12	293	1274	-4.6	9.52	-1.54
231	SLU 83	12	301	1305	-4.77	9.75	-1.58
231	SLU 84	12	297	1290	-4.66	9.66	-1.56
231	SLE RA 1	8	210	897	-3.56	6.22	-1.01
231	SLE RA 2	8	205	880	-3.43	6.12	-0.99
231	SLE RA 3	8	213	911	-3.6	6.36	-1.03
231	SLE RA 4	8	210	901	-3.52	6.31	-1.02
231	SLE RA 5	8	207	890	-3.47	6.21	-1.01
231	SLE RA 6	8	215	921	-3.64	6.45	-1.05
231	SLE RA 7	8	212	911	-3.56	6.4	-1.04
231	SLE RA 8	8	214	918	-3.63	6.4	-1.04
231	SLE RA 9	8	211	907	-3.55	6.34	-1.03
231	SLE RA 10	9	214	927	-3.46	6.71	-1.09
231	SLE RA 11	9	222	958	-3.63	6.95	-1.13
231	SLE RA 12	9	219	948	-3.55	6.9	-1.12
231	SLE RA 13	9	217	937	-3.49	6.8	-1.1
231	SLE RA 14	9	224	968	-3.66	7.04	-1.14
231	SLE RA 15	9	222	958	-3.58	6.99	-1.13
231	SLE RA 16	9	224	965	-3.65	6.99	-1.13
231	SLE RA 17	9	221	954	-3.58	6.93	-1.12
231	SLE RA 18	9	223	964	-3.6	7.06	-1.14
231	SLE RA 19	9	220	954	-3.52	7	-1.13
231	SLE RA 20	9	225	975	-3.63	7.15	-1.16
231	SLE RA 21	9	223	964	-3.55	7.09	-1.15
231	SLE FR 1	8	210	897	-3.56	6.22	-1.01
231	SLE FR 2	8	209	894	-3.53	6.2	-1
231	SLE FR 3	8	211	901	-3.57	6.25	-1.01
231	SLE FR 4	8	213	914	-3.55	6.45	-1.04
231	SLE FR 5	8	215	921	-3.58	6.51	-1.05
231	SLE FR 6	8	216	931	-3.58	6.64	-1.07
231	SLE QP 1	8	210	897	-3.56	6.22	-1.01
231	SLE QP 2	8	214	917	-3.57	6.47	-1.05
231	SLD 1	4	198	855	-3.18	5.93	-0.99
231	SLD 2	4	198	855	-3.18	5.93	-0.99
231	SLD 3	1	-103	-67	6.9	3.67	-0.62
231	SLD 4	1	-103	-67	6.9	3.67	-0.62
231	SLD 5	12	666	2297	-18.74	9.72	-1.6
231	SLD 6	12	666	2297	-18.74	9.72	-1.6
231	SLD 7	1	-338	-776	14.86	2.21	-0.35
231	SLD 8	1	-338	-776	14.86	2.21	-0.35
231	SLD 9	15	766	2611	-22	10.72	-1.74
231	SLD 10	15	766	2611	-22	10.72	-1.74
231	SLD 11	5	-238	-462	11.6	3.21	-0.5
231	SLD 12	5	-238	-462	11.6	3.21	-0.5
231	SLD 13	16	531	1901	-14.05	9.26	-1.48
231	SLD 14	16	531	1901	-14.05	9.26	-1.48
231	SLD 15	13	230	980	-3.97	7.01	-1.1
231	SLD 16	13	230	980	-3.97	7.01	-1.1
231	SLV 1	-2	176	771	-2.67	5.33	-0.94
231	SLV 2	-2	176	771	-2.67	5.33	-0.94
231	SLV 3	-9	-534	-1404	21.1	-0.26	-0.01
231	SLV 4	-9	-534	-1404	21.1	-0.26	-0.01
231	SLV 5	17	1280	4172	-39.36	14.61	-2.42
231	SLV 6	17	1280	4172	-39.36	14.61	-2.42
231	SLV 7	-9	-1088	-3078	39.88	-4.04	0.67
231	SLV 8	-9	-1088	-3078	39.88	-4.04	0.67
231	SLV 9	25	1515	4912	-47.03	16.97	-2.76
231	SLV 10	25	1515	4912	-47.03	16.97	-2.76
231	SLV 11	0	-852	-2338	32.21	-1.68	0.33
231	SLV 12	0	-852	-2338	32.21	-1.68	0.33
231	SLV 13	26	962	3238	-28.24	13.2	-2.08
231	SLV 14	26	962	3238	-28.24	13.2	-2.08
231	SLV 15	18	251	1063	-4.47	7.6	-1.15
231	SLV 16	18	251	1063	-4.47	7.6	-1.15
232	SLU 1	-1	442	1723	-6.21	-0.31	0.06
232	SLU 2	-1	442	1720	-6.2	-0.31	0.06

Nodo	Cont.	Reazione a traslazione			Reazione a rotazione		
Ind.	N.br.	x	y	z	x	y	z
232	SLU 3	-1	448	1744	-6.25	-0.33	0.06
232	SLU 4	-1	448	1742	-6.24	-0.33	0.06
232	SLU 5	-1	439	1709	-6.13	-0.33	0.06
232	SLU 6	-1	446	1734	-6.18	-0.34	0.06
232	SLU 7	-1	446	1732	-6.17	-0.34	0.06
232	SLU 8	-1	438	1701	-6.08	-0.34	0.06
232	SLU 9	-1	438	1699	-6.07	-0.34	0.06
232	SLU 10	-1	513	1998	-7.21	-0.42	0.08
232	SLU 11	-1	520	2023	-7.26	-0.43	0.08
232	SLU 12	-1	519	2021	-7.25	-0.43	0.08
232	SLU 13	-1	511	1988	-7.14	-0.43	0.08
232	SLU 14	-1	518	2012	-7.19	-0.45	0.08
232	SLU 15	-1	517	2010	-7.18	-0.45	0.08
232	SLU 16	-1	510	1980	-7.09	-0.45	0.08
232	SLU 17	-1	509	1978	-7.08	-0.45	0.08
232	SLU 18	-1	545	2121	-7.66	-0.46	0.09
232	SLU 19	-1	544	2119	-7.65	-0.46	0.09
232	SLU 20	-1	543	2110	-7.59	-0.48	0.09
232	SLU 21	-1	542	2108	-7.58	-0.48	0.09
232	SLU 22	-1	519	2024	-7.28	-0.39	0.07
232	SLU 23	-1	518	2021	-7.26	-0.39	0.07
232	SLU 24	-1	525	2046	-7.32	-0.4	0.08
232	SLU 25	-1	524	2044	-7.31	-0.4	0.08
232	SLU 26	-1	516	2010	-7.2	-0.4	0.08
232	SLU 27	-1	523	2035	-7.25	-0.42	0.08
232	SLU 28	-1	522	2033	-7.24	-0.42	0.08
232	SLU 29	-1	515	2002	-7.14	-0.42	0.08
232	SLU 30	-1	514	2001	-7.13	-0.42	0.08
232	SLU 31	-1	590	2300	-8.27	-0.5	0.09
232	SLU 32	-2	597	2324	-8.33	-0.51	0.1
232	SLU 33	-2	596	2323	-8.32	-0.51	0.1
232	SLU 34	-2	588	2289	-8.21	-0.51	0.1
232	SLU 35	-2	594	2314	-8.26	-0.52	0.1
232	SLU 36	-2	594	2312	-8.25	-0.52	0.1
232	SLU 37	-2	586	2281	-8.15	-0.52	0.1
232	SLU 38	-2	586	2279	-8.14	-0.52	0.1
232	SLU 39	-2	622	2422	-8.73	-0.54	0.1
232	SLU 40	-2	621	2420	-8.71	-0.54	0.1
232	SLU 41	-2	619	2411	-8.66	-0.55	0.1
232	SLU 42	-2	619	2409	-8.65	-0.55	0.1
232	SLU 43	-1	549	2136	-7.71	-0.38	0.07
232	SLU 44	-1	548	2133	-7.69	-0.38	0.07
232	SLU 45	-1	555	2158	-7.75	-0.39	0.07
232	SLU 46	-1	554	2156	-7.74	-0.39	0.07
232	SLU 47	-1	546	2122	-7.63	-0.4	0.07
232	SLU 48	-1	552	2147	-7.68	-0.41	0.08
232	SLU 49	-1	552	2145	-7.67	-0.41	0.08
232	SLU 50	-1	544	2114	-7.57	-0.41	0.08
232	SLU 51	-1	544	2113	-7.56	-0.41	0.08
232	SLU 52	-1	620	2412	-8.7	-0.49	0.09
232	SLU 53	-1	626	2436	-8.76	-0.5	0.09
232	SLU 54	-1	626	2435	-8.75	-0.5	0.09
232	SLU 55	-1	618	2401	-8.64	-0.5	0.09
232	SLU 56	-2	624	2426	-8.69	-0.51	0.1
232	SLU 57	-2	624	2424	-8.68	-0.51	0.1
232	SLU 58	-2	616	2393	-8.58	-0.51	0.1
232	SLU 59	-2	616	2391	-8.57	-0.51	0.1
232	SLU 60	-2	651	2534	-9.16	-0.53	0.1
232	SLU 61	-2	651	2532	-9.14	-0.53	0.1
232	SLU 62	-2	649	2523	-9.09	-0.54	0.1
232	SLU 63	-2	649	2521	-9.08	-0.55	0.1
232	SLU 64	-1	626	2437	-8.78	-0.46	0.09
232	SLU 65	-1	625	2434	-8.76	-0.46	0.09
232	SLU 66	-1	631	2459	-8.82	-0.47	0.09
232	SLU 67	-1	631	2457	-8.8	-0.47	0.09
232	SLU 68	-1	623	2424	-8.69	-0.47	0.09
232	SLU 69	-1	629	2448	-8.75	-0.48	0.09
232	SLU 70	-1	629	2447	-8.74	-0.48	0.09
232	SLU 71	-1	621	2416	-8.64	-0.48	0.09
232	SLU 72	-1	621	2414	-8.63	-0.48	0.09
232	SLU 73	-2	697	2713	-9.77	-0.56	0.11
232	SLU 74	-2	703	2738	-9.83	-0.58	0.11
232	SLU 75	-2	703	2736	-9.82	-0.58	0.11
232	SLU 76	-2	694	2702	-9.7	-0.58	0.11
232	SLU 77	-2	701	2727	-9.76	-0.59	0.11
232	SLU 78	-2	700	2725	-9.75	-0.59	0.11
232	SLU 79	-2	693	2695	-9.65	-0.59	0.11
232	SLU 80	-2	692	2693	-9.64	-0.59	0.11
232	SLU 81	-2	728	2835	-10.22	-0.61	0.11
232	SLU 82	-2	728	2834	-10.21	-0.61	0.11
232	SLU 83	-2	726	2825	-10.15	-0.62	0.12
232	SLU 84	-2	725	2823	-10.14	-0.62	0.12
232	SLE RA 1	-1	464	1809	-6.52	-0.33	0.06
232	SLE RA 2	-1	464	1807	-6.51	-0.34	0.06
232	SLE RA 3	-1	468	1823	-6.54	-0.34	0.06
232	SLE RA 4	-1	468	1822	-6.54	-0.34	0.06
232	SLE RA 5	-1	462	1800	-6.46	-0.34	0.06
232	SLE RA 6	-1	467	1816	-6.5	-0.35	0.07
232	SLE RA 7	-1	466	1815	-6.49	-0.35	0.07
232	SLE RA 8	-1	461	1794	-6.43	-0.35	0.07
232	SLE RA 9	-1	461	1793	-6.42	-0.35	0.07

Nodo	Cont.	Reazione a traslazione			Reazione a rotazione		
Ind.	N.br.	x	y	z	x	y	z
232	SLE RA 10	-1	512	1992	-7.18	-0.41	0.08
232	SLE RA 11	-1	516	2009	-7.22	-0.41	0.08
232	SLE RA 12	-1	516	2008	-7.21	-0.41	0.08
232	SLE RA 13	-1	510	1985	-7.13	-0.42	0.08
232	SLE RA 14	-1	515	2002	-7.17	-0.42	0.08
232	SLE RA 15	-1	514	2001	-7.16	-0.42	0.08
232	SLE RA 16	-1	509	1980	-7.1	-0.42	0.08
232	SLE RA 17	-1	509	1979	-7.09	-0.42	0.08
232	SLE RA 18	-1	533	2074	-7.48	-0.44	0.08
232	SLE RA 19	-1	532	2073	-7.47	-0.44	0.08
232	SLE RA 20	-1	531	2067	-7.44	-0.44	0.08
232	SLE RA 21	-1	531	2066	-7.43	-0.44	0.08
232	SLE FR 1	-1	464	1809	-6.52	-0.33	0.06
232	SLE FR 2	-1	464	1808	-6.52	-0.33	0.06
232	SLE FR 3	-1	464	1806	-6.5	-0.34	0.06
232	SLE FR 4	-1	485	1888	-6.81	-0.37	0.07
232	SLE FR 5	-1	484	1885	-6.79	-0.37	0.07
232	SLE FR 6	-1	499	1941	-7	-0.38	0.07
232	SLE QP 1	-1	464	1809	-6.52	-0.33	0.06
232	SLE QP 2	-1	485	1888	-6.81	-0.36	0.07
232	SLD 1	7	881	3361	-15.5	2.04	-0.38
232	SLD 2	7	881	3361	-15.5	2.04	-0.38
232	SLD 3	-2	587	2334	-8.06	-0.93	0.17
232	SLD 4	-2	587	2334	-8.06	-0.93	0.17
232	SLD 5	15	1049	3887	-20.69	4.86	-0.9
232	SLD 6	15	1049	3887	-20.69	4.86	-0.9
232	SLD 7	-15	71	464	4.1	-5.04	0.93
232	SLD 8	-15	71	464	4.1	-5.04	0.93
232	SLD 9	13	899	3312	-17.71	4.31	-0.79
232	SLD 10	13	899	3312	-17.71	4.31	-0.79
232	SLD 11	-17	-79	-111	7.08	-5.59	1.04
232	SLD 12	-17	-79	-111	7.08	-5.59	1.04
232	SLD 13	0	383	1443	-5.56	0.21	-0.03
232	SLD 14	0	383	1443	-5.56	0.21	-0.03
232	SLD 15	-9	89	416	1.88	-2.77	0.52
232	SLD 16	-9	89	416	1.88	-2.77	0.52
232	SLV 1	18	1428	5392	-27.55	5.46	-1.02
232	SLV 2	18	1428	5392	-27.55	5.46	-1.02
232	SLV 3	-5	728	2945	-9.81	-1.86	0.33
232	SLV 4	-5	728	2945	-9.81	-1.86	0.33
232	SLV 5	38	1829	6651	-39.93	12.5	-2.31
232	SLV 6	38	1829	6651	-39.93	12.5	-2.31
232	SLV 7	-36	-503	-1506	19.19	-11.93	2.2
232	SLV 8	-36	-503	-1506	19.19	-11.93	2.2
232	SLV 9	34	1473	5283	-32.81	11.2	-2.06
232	SLV 10	34	1473	5283	-32.81	11.2	-2.06
232	SLV 11	-41	-859	-2874	26.32	-13.23	2.45
232	SLV 12	-41	-859	-2874	26.32	-13.23	2.45
232	SLV 13	2	242	832	-3.8	1.13	-0.19
232	SLV 14	2	242	832	-3.8	1.13	-0.19
232	SLV 15	-20	-458	-1616	13.93	-6.19	1.16
232	SLV 16	-20	-458	-1616	13.93	-6.19	1.16
233	SLU 1	7	-271	5803	9.85	4.78	0
233	SLU 2	6	-178	5689	5.97	3.37	0
233	SLU 3	8	-282	6005	10.25	4.94	0
233	SLU 4	7	-226	5937	7.93	4.1	0
233	SLU 5	6	-185	5833	6.22	3.49	0
233	SLU 6	8	-288	6150	10.5	5.07	0
233	SLU 7	7	-233	6082	8.18	4.22	0
233	SLU 8	8	-284	6092	10.35	5.02	0
233	SLU 9	7	-229	6023	8.02	4.18	0
233	SLU 10	7	-242	6408	8.31	3.91	0
233	SLU 11	9	-345	6724	12.59	5.49	0
233	SLU 12	8	-289	6656	10.26	4.64	0
233	SLU 13	7	-248	6552	8.56	4.03	0
233	SLU 14	9	-351	6869	12.84	5.61	0
233	SLU 15	8	-296	6800	10.51	4.77	0
233	SLU 16	9	-347	6811	12.68	5.57	0
233	SLU 17	8	-292	6742	10.36	4.72	0
233	SLU 18	9	-361	6830	13.18	5.55	0
233	SLU 19	8	-305	6761	10.86	4.71	0
233	SLU 20	9	-367	6974	13.43	5.68	0
233	SLU 21	8	-312	6906	11.11	4.83	0
233	SLU 22	8	-327	6508	11.94	5.33	0
233	SLU 23	7	-235	6394	8.06	3.92	0
233	SLU 24	9	-338	6710	12.34	5.49	0
233	SLU 25	8	-283	6642	10.02	4.65	0
233	SLU 26	7	-242	6538	8.31	4.04	0
233	SLU 27	9	-345	6855	12.59	5.62	0
233	SLU 28	8	-289	6787	10.27	4.77	0
233	SLU 29	9	-341	6797	12.44	5.57	0
233	SLU 30	8	-285	6728	10.11	4.73	0
233	SLU 31	8	-298	7113	10.4	4.46	0
233	SLU 32	10	-401	7429	14.68	6.04	0
233	SLU 33	9	-346	7361	12.35	5.19	0
233	SLU 34	8	-305	7257	10.65	4.58	0
233	SLU 35	10	-408	7574	14.93	6.16	0
233	SLU 36	9	-353	7505	12.6	5.31	0
233	SLU 37	10	-404	7516	14.77	6.12	0
233	SLU 38	9	-348	7447	12.45	5.27	0
233	SLU 39	10	-417	7535	15.27	6.1	0

Nodo	Cont.	Reazione a traslazione			Reazione a rotazione		
Ind.	N.br.	x	y	z	x	y	z
233	SLU 40	9	-362	7466	12.95	5.26	0
233	SLU 41	10	-424	7679	15.52	6.22	0
233	SLU 42	9	-369	7611	13.2	5.38	0
233	SLU 43	9	-333	7302	12.09	6.02	0
233	SLU 44	8	-240	7188	8.21	4.61	0
233	SLU 45	10	-344	7505	12.49	6.19	0
233	SLU 46	9	-288	7436	10.17	5.34	0
233	SLU 47	8	-247	7333	8.46	4.73	0
233	SLU 48	10	-350	7649	12.74	6.31	0
233	SLU 49	9	-295	7581	10.42	5.47	0
233	SLU 50	10	-346	7591	12.59	6.27	0
233	SLU 51	9	-290	7523	10.26	5.42	0
233	SLU 52	9	-303	7907	10.55	5.15	0
233	SLU 53	11	-407	8224	14.83	6.73	0
233	SLU 54	10	-351	8155	12.5	5.89	0
233	SLU 55	9	-310	8051	10.8	5.28	0
233	SLU 56	11	-413	8368	15.08	6.86	0
233	SLU 57	10	-358	8300	12.75	6.01	0
233	SLU 58	11	-409	8310	14.92	6.81	0
233	SLU 59	10	-354	8242	12.6	5.96	0
233	SLU 60	11	-423	8329	15.42	6.8	0
233	SLU 61	10	-367	8261	13.1	5.95	0
233	SLU 62	11	-429	8473	15.67	6.92	0
233	SLU 63	10	-374	8405	13.35	6.07	0
233	SLU 64	10	-389	8007	14.18	6.57	0
233	SLU 65	9	-297	7893	10.3	5.16	0
233	SLU 66	11	-400	8210	14.58	6.74	0
233	SLU 67	10	-345	8141	12.26	5.89	0
233	SLU 68	9	-303	8038	10.55	5.28	0
233	SLU 69	11	-407	8354	14.83	6.86	0
233	SLU 70	10	-351	8286	12.51	6.02	0
233	SLU 71	11	-402	8296	14.68	6.82	0
233	SLU 72	10	-347	8228	12.35	5.97	0
233	SLU 73	10	-360	8612	12.64	5.7	0
233	SLU 74	11	-463	8928	16.92	7.28	0
233	SLU 75	11	-408	8860	14.59	6.44	0
233	SLU 76	10	-367	8756	12.89	5.83	0
233	SLU 77	12	-470	9073	17.17	7.41	0
233	SLU 78	11	-414	9005	14.84	6.56	0
233	SLU 79	12	-465	9015	17.01	7.36	0
233	SLU 80	11	-410	8946	14.69	6.51	0
233	SLU 81	12	-479	9034	17.51	7.35	0
233	SLU 82	11	-424	8966	15.19	6.5	0
233	SLU 83	12	-486	9178	17.76	7.47	0
233	SLU 84	11	-430	9110	15.44	6.62	0
233	SLE RA 1	8	-287	6004	10.44	4.93	0
233	SLE RA 2	7	-225	5928	7.86	3.99	0
233	SLE RA 3	8	-294	6139	10.71	5.05	0
233	SLE RA 4	7	-257	6094	9.17	4.48	0
233	SLE RA 5	7	-230	6025	8.03	4.08	0
233	SLE RA 6	8	-299	6236	10.88	5.13	0
233	SLE RA 7	7	-262	6190	9.33	4.56	0
233	SLE RA 8	8	-296	6197	10.78	5.1	0
233	SLE RA 9	7	-259	6151	9.23	4.53	0
233	SLE RA 10	7	-267	6408	9.42	4.36	0
233	SLE RA 11	8	-336	6619	12.27	5.41	0
233	SLE RA 12	8	-299	6573	10.72	4.84	0
233	SLE RA 13	8	-272	6504	9.59	4.44	0
233	SLE RA 14	9	-341	6715	12.44	5.49	0
233	SLE RA 15	8	-304	6669	10.89	4.93	0
233	SLE RA 16	9	-338	6676	12.34	5.46	0
233	SLE RA 17	8	-301	6631	10.79	4.9	0
233	SLE RA 18	9	-347	6689	12.67	5.45	0
233	SLE RA 19	8	-310	6643	11.12	4.89	0
233	SLE RA 20	9	-351	6785	12.84	5.53	0
233	SLE RA 21	8	-314	6740	11.29	4.97	0
233	SLE FR 1	8	-287	6004	10.44	4.93	0
233	SLE FR 2	8	-275	5989	9.93	4.75	0
233	SLE FR 3	8	-289	6043	10.51	4.97	0
233	SLE FR 4	8	-293	6195	10.6	4.9	0
233	SLE FR 5	8	-307	6248	11.18	5.12	0
233	SLE FR 6	8	-317	6347	11.56	5.19	0
233	SLE QP 1	8	-287	6004	10.44	4.93	0
233	SLE QP 2	8	-305	6210	11.11	5.09	0
233	SLD 1	6	202	4615	-10.01	16.13	-0.01
233	SLD 2	6	202	4615	-10.01	16.13	-0.01
233	SLD 3	-2	-340	4707	13.27	10.74	-0.01
233	SLD 4	-2	-340	4707	13.27	10.74	-0.01
233	SLD 5	20	670	5591	-30.53	16.59	0
233	SLD 6	20	670	5591	-30.53	16.59	0
233	SLD 7	-7	-1138	5900	47.06	-1.4	-0.01
233	SLD 8	-7	-1138	5900	47.06	-1.4	-0.01
233	SLD 9	23	528	6520	-24.84	11.58	0.01
233	SLD 10	23	528	6520	-24.84	11.58	0.01
233	SLD 11	-4	-1280	6829	52.76	-6.41	0
233	SLD 12	-4	-1280	6829	52.76	-6.41	0
233	SLD 13	18	-270	7712	8.96	-0.56	0.01
233	SLD 14	18	-270	7712	8.96	-0.56	0.01
233	SLD 15	10	-812	7805	32.24	-5.96	0.01
233	SLD 16	10	-812	7805	32.24	-5.96	0.01
233	SLV 1	4	865	2528	-37.65	31.71	-0.02

Nodo	Cont.	Reazione a traslazione			Reazione a rotazione		
Ind.	N.br.	x	y	z	x	y	z
233	SLV 2	4	865	2528	-37.65	31.71	-0.02
233	SLV 3	-17	-399	2755	16.6	17.96	-0.03
233	SLV 4	-17	-399	2755	16.6	17.96	-0.03
233	SLV 5	38	1963	4760	-85.8	33.93	0.01
233	SLV 6	38	1963	4760	-85.8	33.93	0.01
233	SLV 7	-31	-2250	5518	95.04	-11.91	-0.03
233	SLV 8	-31	-2250	5518	95.04	-11.91	-0.03
233	SLV 9	47	1640	6901	-72.82	22.09	0.02
233	SLV 10	47	1640	6901	-72.82	22.09	0.02
233	SLV 11	-22	-2573	7659	108.02	-23.76	-0.01
233	SLV 12	-22	-2573	7659	108.02	-23.76	-0.01
233	SLV 13	32	-211	9664	5.62	-7.78	0.03
233	SLV 14	32	-211	9664	5.62	-7.78	0.03
233	SLV 15	12	-1475	9892	59.87	-21.53	0.02
233	SLV 16	12	-1475	9892	59.87	-21.53	0.02
234	SLU 1	2	413	1610	-12.1	3.5	-0.48
234	SLU 2	2	397	1550	-11.56	3.47	-0.48
234	SLU 3	2	421	1644	-12.3	3.62	-0.5
234	SLU 4	2	411	1608	-11.98	3.6	-0.49
234	SLU 5	2	399	1566	-11.61	3.54	-0.49
234	SLU 6	2	424	1660	-12.35	3.7	-0.51
234	SLU 7	2	414	1624	-12.02	3.68	-0.5
234	SLU 8	2	419	1642	-12.19	3.65	-0.5
234	SLU 9	2	409	1606	-11.87	3.63	-0.5
234	SLU 10	2	445	1740	-12.92	3.97	-0.54
234	SLU 11	3	469	1834	-13.66	4.13	-0.57
234	SLU 12	3	459	1798	-13.33	4.11	-0.56
234	SLU 13	3	448	1756	-12.97	4.05	-0.55
234	SLU 14	3	472	1850	-13.7	4.2	-0.58
234	SLU 15	3	462	1814	-13.38	4.18	-0.57
234	SLU 16	3	467	1831	-13.55	4.15	-0.57
234	SLU 17	3	457	1795	-13.23	4.13	-0.57
234	SLU 18	3	482	1881	-14.04	4.22	-0.58
234	SLU 19	3	472	1845	-13.72	4.2	-0.58
234	SLU 20	3	485	1897	-14.09	4.3	-0.59
234	SLU 21	3	475	1861	-13.77	4.28	-0.59
234	SLU 22	3	461	1801	-13.47	4.02	-0.55
234	SLU 23	3	445	1741	-12.93	3.98	-0.55
234	SLU 24	3	469	1835	-13.67	4.14	-0.57
234	SLU 25	3	459	1799	-13.34	4.12	-0.57
234	SLU 26	3	448	1757	-12.98	4.06	-0.56
234	SLU 27	3	472	1851	-13.71	4.21	-0.58
234	SLU 28	3	462	1815	-13.39	4.19	-0.58
234	SLU 29	3	467	1832	-13.56	4.17	-0.57
234	SLU 30	3	457	1796	-13.24	4.15	-0.57
234	SLU 31	3	493	1930	-14.29	4.49	-0.62
234	SLU 32	3	517	2025	-15.03	4.64	-0.64
234	SLU 33	3	507	1989	-14.7	4.63	-0.63
234	SLU 34	3	496	1946	-14.34	4.56	-0.63
234	SLU 35	3	520	2041	-15.07	4.72	-0.65
234	SLU 36	3	510	2005	-14.75	4.7	-0.64
234	SLU 37	3	515	2022	-14.92	4.67	-0.64
234	SLU 38	3	505	1986	-14.6	4.65	-0.64
234	SLU 39	3	530	2072	-15.41	4.74	-0.65
234	SLU 40	3	520	2036	-15.09	4.72	-0.65
234	SLU 41	3	533	2088	-15.46	4.81	-0.66
234	SLU 42	3	523	2052	-15.13	4.79	-0.66
234	SLU 43	3	520	2027	-15.27	4.37	-0.6
234	SLU 44	3	504	1967	-14.73	4.34	-0.59
234	SLU 45	3	528	2062	-15.46	4.49	-0.62
234	SLU 46	3	518	2026	-15.14	4.47	-0.61
234	SLU 47	3	507	1983	-14.77	4.41	-0.6
234	SLU 48	3	531	2078	-15.51	4.57	-0.63
234	SLU 49	3	521	2042	-15.18	4.55	-0.62
234	SLU 50	3	526	2059	-15.36	4.52	-0.62
234	SLU 51	3	516	2023	-15.03	4.5	-0.62
234	SLU 52	3	552	2157	-16.08	4.84	-0.66
234	SLU 53	3	576	2252	-16.82	5	-0.68
234	SLU 54	3	566	2216	-16.5	4.98	-0.68
234	SLU 55	3	555	2173	-16.13	4.92	-0.67
234	SLU 56	3	579	2268	-16.87	5.07	-0.7
234	SLU 57	3	569	2232	-16.54	5.05	-0.69
234	SLU 58	3	574	2249	-16.71	5.03	-0.69
234	SLU 59	3	564	2213	-16.39	5.01	-0.69
234	SLU 60	3	589	2298	-17.21	5.09	-0.7
234	SLU 61	3	579	2262	-16.88	5.07	-0.69
234	SLU 62	3	592	2314	-17.25	5.17	-0.71
234	SLU 63	3	582	2278	-16.93	5.15	-0.71
234	SLU 64	3	569	2218	-16.63	4.89	-0.67
234	SLU 65	3	552	2158	-16.09	4.86	-0.67
234	SLU 66	3	576	2253	-16.83	5.01	-0.69
234	SLU 67	3	567	2217	-16.51	4.99	-0.68
234	SLU 68	3	555	2174	-16.14	4.93	-0.68
234	SLU 69	3	579	2269	-16.88	5.09	-0.7
234	SLU 70	3	569	2233	-16.55	5.07	-0.69
234	SLU 71	3	574	2250	-16.72	5.04	-0.69
234	SLU 72	3	565	2214	-16.4	5.02	-0.69
234	SLU 73	3	600	2348	-17.45	5.36	-0.73
234	SLU 74	3	625	2443	-18.19	5.52	-0.76
234	SLU 75	3	615	2407	-17.86	5.5	-0.75
234	SLU 76	3	603	2364	-17.5	5.44	-0.75

Nodo	Cont.	Reazione a traslazione			Reazione a rotazione		
Ind.	N.br.	x	y	z	x	y	z
234	SLU 77	4	627	2459	-18.23	5.59	-0.77
234	SLU 78	4	618	2423	-17.91	5.57	-0.76
234	SLU 79	4	623	2440	-18.08	5.54	-0.76
234	SLU 80	4	613	2404	-17.76	5.52	-0.76
234	SLU 81	3	637	2489	-18.57	5.61	-0.77
234	SLU 82	3	628	2453	-18.25	5.59	-0.77
234	SLU 83	4	640	2505	-18.62	5.69	-0.78
234	SLU 84	4	630	2469	-18.3	5.67	-0.78
234	SLE RA 1	2	427	1664	-12.5	3.65	-0.5
234	SLE RA 2	2	416	1624	-12.14	3.63	-0.5
234	SLE RA 3	2	432	1687	-12.63	3.73	-0.51
234	SLE RA 4	2	425	1663	-12.41	3.72	-0.51
234	SLE RA 5	2	418	1635	-12.17	3.67	-0.5
234	SLE RA 6	2	434	1698	-12.66	3.78	-0.52
234	SLE RA 7	2	427	1674	-12.44	3.76	-0.52
234	SLE RA 8	2	431	1685	-12.56	3.75	-0.51
234	SLE RA 9	2	424	1661	-12.34	3.73	-0.51
234	SLE RA 10	2	448	1751	-13.04	3.96	-0.54
234	SLE RA 11	3	464	1814	-13.53	4.07	-0.56
234	SLE RA 12	3	458	1790	-13.32	4.05	-0.56
234	SLE RA 13	3	450	1761	-13.07	4.01	-0.55
234	SLE RA 14	3	466	1825	-13.56	4.12	-0.56
234	SLE RA 15	3	459	1801	-13.35	4.1	-0.56
234	SLE RA 16	3	463	1812	-13.46	4.08	-0.56
234	SLE RA 17	3	456	1788	-13.24	4.07	-0.56
234	SLE RA 18	3	473	1845	-13.79	4.13	-0.57
234	SLE RA 19	3	466	1821	-13.57	4.12	-0.56
234	SLE RA 20	3	475	1856	-13.82	4.18	-0.57
234	SLE RA 21	3	468	1832	-13.6	4.17	-0.57
234	SLE FR 1	2	427	1664	-12.5	3.65	-0.5
234	SLE FR 2	2	425	1656	-12.42	3.64	-0.5
234	SLE FR 3	2	427	1668	-12.51	3.67	-0.5
234	SLE FR 4	2	438	1710	-12.81	3.79	-0.52
234	SLE FR 5	2	441	1723	-12.9	3.81	-0.52
234	SLE FR 6	2	450	1755	-13.14	3.89	-0.53
234	SLE QP 1	2	427	1664	-12.5	3.65	-0.5
234	SLE QP 2	2	440	1718	-12.88	3.79	-0.52
234	SLD 1	-7	483	1831	-14.5	6.52	-0.86
234	SLD 2	-7	483	1831	-14.5	6.52	-0.86
234	SLD 3	-4	60	593	1.58	5.04	-0.64
234	SLD 4	-4	60	593	1.58	5.04	-0.64
234	SLD 5	-6	1095	3630	-37.75	6.85	-0.96
234	SLD 6	-6	1095	3630	-37.75	6.85	-0.96
234	SLD 7	6	-316	-497	15.84	1.92	-0.22
234	SLD 8	6	-316	-497	15.84	1.92	-0.22
234	SLD 9	-1	1197	3934	-41.6	5.66	-0.82
234	SLD 10	-1	1197	3934	-41.6	5.66	-0.82
234	SLD 11	10	-214	-193	11.98	0.73	-0.08
234	SLD 12	10	-214	-193	11.98	0.73	-0.08
234	SLD 13	8	821	2844	-27.34	2.55	-0.4
234	SLD 14	8	821	2844	-27.34	2.55	-0.4
234	SLD 15	12	398	1606	-11.27	1.07	-0.17
234	SLD 16	12	398	1606	-11.27	1.07	-0.17
234	SLV 1	-21	537	1965	-16.58	10.46	-1.36
234	SLV 2	-21	537	1965	-16.58	10.46	-1.36
234	SLV 3	-13	-464	-963	21.42	6.75	-0.8
234	SLV 4	-13	-464	-963	21.42	6.75	-0.8
234	SLV 5	-17	1987	6232	-71.62	11.41	-1.62
234	SLV 6	-17	1987	6232	-71.62	11.41	-1.62
234	SLV 7	10	-1348	-3526	55.04	-0.94	0.25
234	SLV 8	10	-1348	-3526	55.04	-0.94	0.25
234	SLV 9	-6	2229	6963	-80.8	8.52	-1.29
234	SLV 10	-6	2229	6963	-80.8	8.52	-1.29
234	SLV 11	22	-1106	-2795	45.85	-3.83	0.59
234	SLV 12	22	-1106	-2795	45.85	-3.83	0.59
234	SLV 13	17	1345	4400	-47.18	0.83	-0.24
234	SLV 14	17	1345	4400	-47.18	0.83	-0.24
234	SLV 15	26	344	1472	-9.19	-2.88	0.32
234	SLV 16	26	344	1472	-9.19	-2.88	0.32
235	SLU 1	3	326	2859	-21.2	1.21	-0.01
235	SLU 2	3	326	2854	-21.2	1.2	-0.01
235	SLU 3	3	332	2903	-21.56	1.24	-0.01
235	SLU 4	3	332	2900	-21.56	1.23	-0.01
235	SLU 5	3	327	2846	-21.18	1.21	-0.01
235	SLU 6	3	333	2895	-21.55	1.24	-0.01
235	SLU 7	3	333	2892	-21.55	1.24	-0.01
235	SLU 8	3	328	2844	-21.17	1.23	-0.01
235	SLU 9	3	328	2840	-21.17	1.22	-0.01
235	SLU 10	3	381	3336	-24.84	1.5	-0.02
235	SLU 11	3	387	3385	-25.2	1.53	-0.02
235	SLU 12	3	387	3382	-25.2	1.53	-0.02
235	SLU 13	3	382	3328	-24.82	1.51	-0.02
235	SLU 14	3	388	3377	-25.19	1.54	-0.02
235	SLU 15	3	388	3374	-25.19	1.54	-0.02
235	SLU 16	3	383	3325	-24.81	1.52	-0.02
235	SLU 17	3	383	3322	-24.81	1.52	-0.02
235	SLU 18	3	404	3548	-26.4	1.63	-0.02
235	SLU 19	3	405	3544	-26.4	1.63	-0.02
235	SLU 20	3	405	3540	-26.39	1.64	-0.02
235	SLU 21	3	405	3536	-26.39	1.64	-0.02
235	SLU 22	3	382	3363	-25.01	1.48	-0.02

Nodo	Cont.	Reazione a traslazione			Reazione a rotazione		
Ind.	N.br.	x	y	z	x	y	z
235	SLU 23	3	382	3357	-25.01	1.48	-0.02
235	SLU 24	3	388	3406	-25.38	1.51	-0.02
235	SLU 25	3	388	3403	-25.38	1.51	-0.02
235	SLU 26	3	383	3349	-25	1.48	-0.02
235	SLU 27	3	389	3398	-25.36	1.52	-0.02
235	SLU 28	3	389	3395	-25.36	1.51	-0.02
235	SLU 29	3	384	3347	-24.99	1.5	-0.02
235	SLU 30	3	384	3343	-24.99	1.5	-0.02
235	SLU 31	4	437	3839	-28.66	1.77	-0.02
235	SLU 32	4	443	3888	-29.02	1.81	-0.02
235	SLU 33	4	443	3885	-29.02	1.8	-0.02
235	SLU 34	4	438	3831	-28.64	1.78	-0.02
235	SLU 35	4	444	3880	-29.01	1.82	-0.02
235	SLU 36	4	444	3877	-29.01	1.81	-0.02
235	SLU 37	4	439	3828	-28.63	1.8	-0.02
235	SLU 38	4	439	3825	-28.63	1.79	-0.02
235	SLU 39	4	461	4051	-30.22	1.91	-0.02
235	SLU 40	4	461	4047	-30.22	1.9	-0.02
235	SLU 41	4	461	4043	-30.2	1.92	-0.02
235	SLU 42	4	461	4040	-30.2	1.91	-0.02
235	SLU 43	3	405	3545	-26.25	1.48	-0.02
235	SLU 44	3	405	3539	-26.25	1.47	-0.02
235	SLU 45	3	411	3589	-26.61	1.5	-0.02
235	SLU 46	3	411	3585	-26.61	1.5	-0.02
235	SLU 47	3	406	3531	-26.23	1.48	-0.02
235	SLU 48	3	412	3581	-26.6	1.51	-0.02
235	SLU 49	3	412	3577	-26.6	1.51	-0.02
235	SLU 50	3	406	3529	-26.22	1.49	-0.02
235	SLU 51	3	406	3526	-26.22	1.49	-0.02
235	SLU 52	4	460	4021	-29.89	1.77	-0.02
235	SLU 53	4	466	4070	-30.25	1.8	-0.02
235	SLU 54	4	466	4067	-30.25	1.8	-0.02
235	SLU 55	4	461	4013	-29.87	1.78	-0.02
235	SLU 56	4	466	4062	-30.24	1.81	-0.02
235	SLU 57	4	466	4059	-30.24	1.81	-0.02
235	SLU 58	4	461	4011	-29.86	1.79	-0.02
235	SLU 59	4	461	4007	-29.86	1.79	-0.02
235	SLU 60	4	483	4233	-31.45	1.9	-0.02
235	SLU 61	4	483	4230	-31.45	1.9	-0.02
235	SLU 62	4	484	4225	-31.44	1.91	-0.02
235	SLU 63	4	484	4222	-31.44	1.91	-0.02
235	SLU 64	4	461	4048	-30.07	1.75	-0.02
235	SLU 65	4	461	4042	-30.07	1.74	-0.02
235	SLU 66	4	467	4092	-30.43	1.78	-0.02
235	SLU 67	4	467	4088	-30.43	1.77	-0.02
235	SLU 68	4	462	4035	-30.05	1.75	-0.02
235	SLU 69	4	468	4084	-30.41	1.79	-0.02
235	SLU 70	4	468	4081	-30.41	1.78	-0.02
235	SLU 71	4	462	4032	-30.04	1.77	-0.02
235	SLU 72	4	462	4029	-30.04	1.76	-0.02
235	SLU 73	4	516	4524	-33.71	2.04	-0.02
235	SLU 74	4	522	4573	-34.07	2.08	-0.02
235	SLU 75	4	522	4570	-34.07	2.07	-0.02
235	SLU 76	4	517	4516	-33.69	2.05	-0.02
235	SLU 77	4	523	4566	-34.06	2.09	-0.02
235	SLU 78	4	523	4562	-34.06	2.08	-0.02
235	SLU 79	4	517	4514	-33.68	2.07	-0.02
235	SLU 80	4	517	4510	-33.68	2.06	-0.02
235	SLU 81	5	539	4736	-35.27	2.18	-0.02
235	SLU 82	5	539	4733	-35.27	2.17	-0.02
235	SLU 83	5	540	4728	-35.25	2.19	-0.02
235	SLU 84	5	540	4725	-35.25	2.18	-0.02
235	SLE RA 1	3	342	3003	-22.29	1.29	-0.01
235	SLE RA 2	3	342	3000	-22.29	1.28	-0.01
235	SLE RA 3	3	346	3032	-22.53	1.3	-0.01
235	SLE RA 4	3	346	3030	-22.53	1.3	-0.01
235	SLE RA 5	3	343	2994	-22.28	1.29	-0.01
235	SLE RA 6	3	347	3027	-22.52	1.31	-0.01
235	SLE RA 7	3	347	3025	-22.52	1.31	-0.01
235	SLE RA 8	3	343	2993	-22.27	1.3	-0.01
235	SLE RA 9	3	343	2990	-22.27	1.3	-0.01
235	SLE RA 10	3	379	3321	-24.72	1.48	-0.02
235	SLE RA 11	3	383	3354	-24.96	1.5	-0.02
235	SLE RA 12	3	383	3351	-24.96	1.5	-0.02
235	SLE RA 13	3	379	3315	-24.71	1.49	-0.02
235	SLE RA 14	3	383	3348	-24.95	1.51	-0.02
235	SLE RA 15	3	383	3346	-24.95	1.51	-0.02
235	SLE RA 16	3	380	3314	-24.7	1.5	-0.02
235	SLE RA 17	3	380	3312	-24.7	1.49	-0.02
235	SLE RA 18	3	394	3462	-25.76	1.57	-0.02
235	SLE RA 19	3	394	3460	-25.76	1.57	-0.02
235	SLE RA 20	3	395	3457	-25.75	1.58	-0.02
235	SLE RA 21	3	395	3454	-25.75	1.57	-0.02
235	SLE FR 1	3	342	3003	-22.29	1.29	-0.01
235	SLE FR 2	3	342	3002	-22.29	1.29	-0.01
235	SLE FR 3	3	342	3001	-22.28	1.29	-0.01
235	SLE FR 4	3	358	3140	-23.33	1.37	-0.01
235	SLE FR 5	3	358	3139	-23.32	1.37	-0.01
235	SLE FR 6	3	368	3233	-24.02	1.43	-0.02
235	SLE QP 1	3	342	3003	-22.29	1.29	-0.01
235	SLE QP 2	3	358	3141	-23.33	1.37	-0.01

Nodo	Cont.	Reazione a traslazione			Reazione a rotazione		
Ind.	N.br.	x	y	z	x	y	z
235	SLD 1	-1	356	2700	-23.09	0.94	0
235	SLD 2	-1	356	2700	-23.09	0.94	0
235	SLD 3	4	73	1233	-3.21	3.9	-0.01
235	SLD 4	4	73	1233	-3.21	3.9	-0.01
235	SLD 5	-6	787	5232	-53.41	-3.25	0.02
235	SLD 6	-6	787	5232	-53.41	-3.25	0.02
235	SLD 7	11	-158	344	12.86	6.62	-0.04
235	SLD 8	11	-158	344	12.86	6.62	-0.04
235	SLD 9	-5	873	5937	-59.52	-3.87	0.01
235	SLD 10	-5	873	5937	-59.52	-3.87	0.01
235	SLD 11	12	-72	1049	6.76	5.99	-0.05
235	SLD 12	12	-72	1049	6.76	5.99	-0.05
235	SLD 13	2	643	5049	-43.45	-1.15	-0.02
235	SLD 14	2	643	5049	-43.45	-1.15	-0.02
235	SLD 15	7	360	3582	-23.57	1.8	-0.03
235	SLD 16	7	360	3582	-23.57	1.8	-0.03
235	SLV 1	-6	348	2085	-22.45	0.04	0.03
235	SLV 2	-6	348	2085	-22.45	0.04	0.03
235	SLV 3	6	-326	-1409	24.84	7.51	-0.02
235	SLV 4	6	-326	-1409	24.84	7.51	-0.02
235	SLV 5	-19	1377	8123	-94.79	-10.36	0.06
235	SLV 6	-19	1377	8123	-94.79	-10.36	0.06
235	SLV 7	23	-870	-3523	62.85	14.55	-0.08
235	SLV 8	23	-870	-3523	62.85	14.55	-0.08
235	SLV 9	-18	1585	9805	-109.5	-11.8	0.05
235	SLV 10	-18	1585	9805	-109.5	-11.8	0.05
235	SLV 11	25	-662	-1841	48.13	13.1	-0.09
235	SLV 12	25	-662	-1841	48.13	13.1	-0.09
235	SLV 13	-1	1041	7690	-71.5	-4.77	-0.01
235	SLV 14	-1	1041	7690	-71.5	-4.77	-0.01
235	SLV 15	12	367	4197	-24.2	2.7	-0.06
235	SLV 16	12	367	4197	-24.2	2.7	-0.06
236	SLU 1	-1	400	2827	-27.14	-0.41	0
236	SLU 2	-1	399	2823	-27.11	-0.41	0
236	SLU 3	-1	407	2863	-27.68	-0.43	0
236	SLU 4	-1	407	2860	-27.66	-0.43	0
236	SLU 5	-1	400	2806	-27.18	-0.43	0
236	SLU 6	-1	408	2847	-27.75	-0.45	0
236	SLU 7	-1	408	2844	-27.74	-0.45	0
236	SLU 8	-1	402	2795	-27.28	-0.45	0
236	SLU 9	-1	402	2792	-27.26	-0.45	0
236	SLU 10	-1	463	3277	-31.48	-0.55	0
236	SLU 11	-1	471	3317	-32.05	-0.56	0
236	SLU 12	-1	471	3314	-32.03	-0.56	0
236	SLU 13	-1	464	3261	-31.55	-0.57	0
236	SLU 14	-1	472	3301	-32.12	-0.58	0
236	SLU 15	-1	472	3298	-32.1	-0.58	0
236	SLU 16	-1	466	3249	-31.65	-0.58	0
236	SLU 17	-1	466	3246	-31.63	-0.58	0
236	SLU 18	-1	491	3476	-33.38	-0.6	0
236	SLU 19	-1	491	3473	-33.36	-0.6	0
236	SLU 20	-1	492	3460	-33.45	-0.62	0
236	SLU 21	-1	492	3457	-33.43	-0.62	0
236	SLU 22	-1	466	3315	-31.75	-0.51	0
236	SLU 23	-1	465	3311	-31.72	-0.51	0
236	SLU 24	-1	473	3351	-32.29	-0.53	0
236	SLU 25	-1	473	3348	-32.28	-0.53	0
236	SLU 26	-1	466	3295	-31.79	-0.53	0
236	SLU 27	-1	474	3335	-32.37	-0.54	0
236	SLU 28	-1	474	3332	-32.35	-0.55	0
236	SLU 29	-1	468	3283	-31.9	-0.54	0
236	SLU 30	-1	468	3280	-31.88	-0.55	0
236	SLU 31	-1	529	3765	-36.09	-0.64	0
236	SLU 32	-1	537	3805	-36.66	-0.66	0
236	SLU 33	-1	537	3803	-36.64	-0.66	0
236	SLU 34	-1	530	3749	-36.16	-0.66	0
236	SLU 35	-1	538	3789	-36.74	-0.68	0
236	SLU 36	-1	538	3786	-36.72	-0.68	0
236	SLU 37	-1	532	3737	-36.27	-0.68	0
236	SLU 38	-1	532	3734	-36.25	-0.68	0
236	SLU 39	-1	557	3964	-37.99	-0.7	0
236	SLU 40	-1	557	3961	-37.97	-0.7	0
236	SLU 41	-1	558	3948	-38.07	-0.72	0
236	SLU 42	-1	558	3945	-38.05	-0.72	0
236	SLU 43	-1	497	3507	-33.7	-0.5	0
236	SLU 44	-1	496	3503	-33.67	-0.5	0
236	SLU 45	-1	504	3543	-34.24	-0.52	0
236	SLU 46	-1	504	3541	-34.22	-0.52	0
236	SLU 47	-1	498	3487	-33.74	-0.52	0
236	SLU 48	-1	506	3527	-34.32	-0.53	0
236	SLU 49	-1	505	3525	-34.3	-0.54	0
236	SLU 50	-1	499	3475	-33.85	-0.53	0
236	SLU 51	-1	499	3473	-33.83	-0.54	0
236	SLU 52	-1	560	3957	-38.04	-0.63	0
236	SLU 53	-1	568	3998	-38.61	-0.65	0
236	SLU 54	-1	568	3995	-38.59	-0.65	0
236	SLU 55	-1	562	3941	-38.11	-0.65	0
236	SLU 56	-1	570	3981	-38.68	-0.67	0
236	SLU 57	-1	569	3979	-38.67	-0.67	0
236	SLU 58	-1	563	3929	-38.21	-0.67	0
236	SLU 59	-1	563	3927	-38.19	-0.67	0

Nodo	Cont.	Reazione a traslazione			Reazione a rotazione		
Ind.	N.br.	x	y	z	x	y	z
236	SLU 60	-1	588	4156	-39.94	-0.69	0
236	SLU 61	-1	588	4154	-39.92	-0.69	0
236	SLU 62	-1	589	4140	-40.01	-0.71	0
236	SLU 63	-1	589	4138	-40	-0.71	0
236	SLU 64	-1	563	3996	-38.31	-0.6	0
236	SLU 65	-1	563	3991	-38.28	-0.6	0
236	SLU 66	-1	571	4032	-38.86	-0.61	0
236	SLU 67	-1	570	4029	-38.84	-0.62	0
236	SLU 68	-1	564	3975	-38.35	-0.62	0
236	SLU 69	-1	572	4015	-38.93	-0.63	0
236	SLU 70	-1	571	4013	-38.91	-0.63	0
236	SLU 71	-1	565	3963	-38.46	-0.63	0
236	SLU 72	-1	565	3961	-38.44	-0.63	0
236	SLU 73	-1	627	4446	-42.65	-0.73	0
236	SLU 74	-1	635	4486	-43.22	-0.75	0
236	SLU 75	-1	634	4483	-43.21	-0.75	0
236	SLU 76	-1	628	4430	-42.72	-0.75	0
236	SLU 77	-2	636	4470	-43.3	-0.77	0
236	SLU 78	-2	635	4467	-43.28	-0.77	0
236	SLU 79	-2	629	4418	-42.83	-0.77	0
236	SLU 80	-2	629	4415	-42.81	-0.77	0
236	SLU 81	-2	655	4645	-44.55	-0.79	0
236	SLU 82	-2	654	4642	-44.54	-0.79	0
236	SLU 83	-2	656	4628	-44.63	-0.81	0
236	SLU 84	-2	655	4626	-44.61	-0.81	0
236	SLE RA 1	-1	419	2966	-28.46	-0.44	0
236	SLE RA 2	-1	418	2963	-28.44	-0.44	0
236	SLE RA 3	-1	424	2990	-28.82	-0.45	0
236	SLE RA 4	-1	423	2989	-28.81	-0.45	0
236	SLE RA 5	-1	419	2953	-28.48	-0.45	0
236	SLE RA 6	-1	424	2979	-28.87	-0.46	0
236	SLE RA 7	-1	424	2978	-28.85	-0.46	0
236	SLE RA 8	-1	420	2945	-28.55	-0.46	0
236	SLE RA 9	-1	420	2943	-28.54	-0.46	0
236	SLE RA 10	-1	461	3266	-31.35	-0.53	0
236	SLE RA 11	-1	466	3293	-31.73	-0.54	0
236	SLE RA 12	-1	466	3291	-31.72	-0.54	0
236	SLE RA 13	-1	462	3256	-31.4	-0.54	0
236	SLE RA 14	-1	467	3282	-31.78	-0.55	0
236	SLE RA 15	-1	467	3281	-31.77	-0.55	0
236	SLE RA 16	-1	463	3248	-31.47	-0.55	0
236	SLE RA 17	-1	463	3246	-31.45	-0.55	0
236	SLE RA 18	-1	480	3399	-32.62	-0.57	0
236	SLE RA 19	-1	479	3397	-32.61	-0.57	0
236	SLE RA 20	-1	480	3388	-32.67	-0.58	0
236	SLE RA 21	-1	480	3386	-32.65	-0.58	0
236	SLE FR 1	-1	419	2966	-28.46	-0.44	0
236	SLE FR 2	-1	419	2966	-28.45	-0.44	0
236	SLE FR 3	-1	419	2962	-28.48	-0.44	0
236	SLE FR 4	-1	437	3095	-29.7	-0.48	0
236	SLE FR 5	-1	437	3092	-29.73	-0.48	0
236	SLE FR 6	-1	449	3183	-30.54	-0.5	0
236	SLE QP 1	-1	419	2966	-28.46	-0.44	0
236	SLE QP 2	-1	437	3096	-29.71	-0.47	0
236	SLD 1	3	739	5286	-48.8	2.7	0.02
236	SLD 2	3	739	5286	-48.8	2.7	0.02
236	SLD 3	-3	494	3846	-34.06	-1.48	0
236	SLD 4	-3	494	3846	-34.06	-1.48	0
236	SLD 5	10	899	5937	-57.78	6.82	0.04
236	SLD 6	10	899	5937	-57.78	6.82	0.04
236	SLD 7	-11	83	1137	-8.67	-7.12	-0.03
236	SLD 8	-11	83	1137	-8.67	-7.12	-0.03
236	SLD 9	9	791	5055	-50.75	6.17	0.03
236	SLD 10	9	791	5055	-50.75	6.17	0.03
236	SLD 11	-12	-25	255	-1.63	-7.77	-0.04
236	SLD 12	-12	-25	255	-1.63	-7.77	-0.04
236	SLD 13	1	380	2346	-25.35	0.53	0
236	SLD 14	1	380	2346	-25.35	0.53	0
236	SLD 15	-5	135	906	-10.62	-3.65	-0.02
236	SLD 16	-5	135	906	-10.62	-3.65	-0.02
236	SLV 1	9	1159	8307	-75.23	7.26	0.05
236	SLV 2	9	1159	8307	-75.23	7.26	0.05
236	SLV 3	-7	574	4877	-40.08	-3.06	0
236	SLV 4	-7	574	4877	-40.08	-3.06	0
236	SLV 5	26	1540	9862	-96.66	17.51	0.09
236	SLV 6	26	1540	9862	-96.66	17.51	0.09
236	SLV 7	-26	-408	-1573	20.48	-16.91	-0.08
236	SLV 8	-26	-408	-1573	20.48	-16.91	-0.08
236	SLV 9	24	1282	7765	-79.89	15.96	0.08
236	SLV 10	24	1282	7765	-79.89	15.96	0.08
236	SLV 11	-28	-666	-3670	37.25	-18.46	-0.09
236	SLV 12	-28	-666	-3670	37.25	-18.46	-0.09
236	SLV 13	5	299	1315	-19.33	2.11	0
236	SLV 14	5	299	1315	-19.33	2.11	0
236	SLV 15	-11	-285	-2115	15.81	-8.21	-0.05
236	SLV 16	-11	-285	-2115	15.81	-8.21	-0.05
237	SLU 1	19	104	1620	-5.5	11.83	0.05
237	SLU 2	19	99	1583	-5.2	11.56	0.05
237	SLU 3	20	106	1659	-5.58	12.26	0.05
237	SLU 4	19	103	1637	-5.4	12.1	0.05
237	SLU 5	19	100	1611	-5.27	11.83	0.05

Nodo	Cont.	Reazione a traslazione			Reazione a rotazione		
Ind.	N.br.	x	y	z	x	y	z
237	SLU 6	20	107	1687	-5.65	12.53	0.05
237	SLU 7	20	104	1665	-5.47	12.37	0.05
237	SLU 8	20	106	1675	-5.63	12.37	0.05
237	SLU 9	20	103	1653	-5.45	12.21	0.05
237	SLU 10	21	103	1730	-5.46	13.33	0.05
237	SLU 11	23	109	1806	-5.85	14.04	0.06
237	SLU 12	22	106	1784	-5.67	13.87	0.05
237	SLU 13	22	104	1757	-5.53	13.6	0.05
237	SLU 14	23	110	1833	-5.91	14.31	0.06
237	SLU 15	23	107	1811	-5.73	14.14	0.06
237	SLU 16	23	110	1821	-5.9	14.15	0.06
237	SLU 17	22	107	1799	-5.72	13.98	0.05
237	SLU 18	23	110	1829	-5.88	14.37	0.06
237	SLU 19	23	107	1807	-5.7	14.2	0.06
237	SLU 20	23	111	1857	-5.94	14.64	0.06
237	SLU 21	23	108	1835	-5.77	14.47	0.06
237	SLU 22	22	110	1777	-5.84	13.66	0.05
237	SLU 23	22	105	1740	-5.54	13.39	0.05
237	SLU 24	23	111	1816	-5.92	14.09	0.06
237	SLU 25	22	108	1794	-5.74	13.92	0.05
237	SLU 26	22	106	1768	-5.61	13.66	0.05
237	SLU 27	23	112	1844	-5.99	14.36	0.06
237	SLU 28	23	109	1822	-5.81	14.19	0.06
237	SLU 29	23	112	1832	-5.97	14.2	0.06
237	SLU 30	23	109	1810	-5.79	14.03	0.06
237	SLU 31	24	108	1887	-5.81	15.16	0.06
237	SLU 32	25	115	1963	-6.19	15.86	0.06
237	SLU 33	25	112	1941	-6.01	15.7	0.06
237	SLU 34	25	109	1914	-5.87	15.43	0.06
237	SLU 35	26	116	1990	-6.25	16.13	0.06
237	SLU 36	26	113	1968	-6.08	15.97	0.06
237	SLU 37	26	115	1978	-6.24	15.97	0.06
237	SLU 38	25	112	1956	-6.06	15.81	0.06
237	SLU 39	26	115	1986	-6.22	16.19	0.06
237	SLU 40	26	112	1964	-6.04	16.03	0.06
237	SLU 41	26	116	2014	-6.29	16.46	0.06
237	SLU 42	26	113	1992	-6.11	16.3	0.06
237	SLU 43	24	134	2052	-7.03	14.76	0.06
237	SLU 44	23	129	2015	-6.73	14.48	0.06
237	SLU 45	24	135	2091	-7.11	15.19	0.06
237	SLU 46	24	132	2069	-6.93	15.02	0.06
237	SLU 47	24	130	2043	-6.8	14.75	0.06
237	SLU 48	25	136	2119	-7.18	15.45	0.06
237	SLU 49	25	133	2097	-7	15.29	0.06
237	SLU 50	25	136	2107	-7.16	15.29	0.06
237	SLU 51	24	133	2085	-6.98	15.13	0.06
237	SLU 52	26	133	2162	-7	16.26	0.06
237	SLU 53	27	139	2238	-7.38	16.96	0.07
237	SLU 54	27	136	2216	-7.2	16.8	0.07
237	SLU 55	27	134	2189	-7.06	16.53	0.06
237	SLU 56	28	140	2265	-7.44	17.23	0.07
237	SLU 57	27	137	2243	-7.27	17.07	0.07
237	SLU 58	27	139	2253	-7.43	17.07	0.07
237	SLU 59	27	136	2231	-7.25	16.91	0.07
237	SLU 60	28	139	2261	-7.41	17.29	0.07
237	SLU 61	28	136	2239	-7.23	17.13	0.07
237	SLU 62	28	140	2289	-7.48	17.56	0.07
237	SLU 63	28	137	2267	-7.3	17.4	0.07
237	SLU 64	27	139	2209	-7.37	16.58	0.07
237	SLU 65	26	134	2173	-7.07	16.31	0.06
237	SLU 66	27	140	2248	-7.45	17.01	0.07
237	SLU 67	27	137	2227	-7.27	16.85	0.07
237	SLU 68	27	135	2200	-7.14	16.58	0.06
237	SLU 69	28	141	2276	-7.52	17.28	0.07
237	SLU 70	28	138	2254	-7.34	17.12	0.07
237	SLU 71	27	141	2264	-7.51	17.12	0.07
237	SLU 72	27	138	2242	-7.33	16.96	0.07
237	SLU 73	29	138	2319	-7.34	18.08	0.07
237	SLU 74	30	144	2395	-7.72	18.79	0.07
237	SLU 75	30	141	2373	-7.54	18.62	0.07
237	SLU 76	29	139	2346	-7.41	18.35	0.07
237	SLU 77	31	145	2422	-7.79	19.06	0.07
237	SLU 78	30	142	2400	-7.61	18.89	0.07
237	SLU 79	30	145	2410	-7.77	18.9	0.07
237	SLU 80	30	142	2388	-7.59	18.73	0.07
237	SLU 81	31	145	2418	-7.75	19.12	0.07
237	SLU 82	30	142	2396	-7.57	18.95	0.07
237	SLU 83	31	146	2446	-7.82	19.39	0.08
237	SLU 84	31	143	2424	-7.64	19.22	0.08
237	SLE RA 1	20	106	1665	-5.59	12.35	0.05
237	SLE RA 2	20	102	1640	-5.39	12.17	0.05
237	SLE RA 3	20	107	1691	-5.65	12.64	0.05
237	SLE RA 4	20	105	1676	-5.53	12.53	0.05
237	SLE RA 5	20	103	1659	-5.44	12.35	0.05
237	SLE RA 6	21	107	1709	-5.69	12.82	0.05
237	SLE RA 7	20	105	1695	-5.57	12.71	0.05
237	SLE RA 8	20	107	1701	-5.68	12.71	0.05
237	SLE RA 9	20	105	1687	-5.57	12.6	0.05
237	SLE RA 10	21	105	1738	-5.57	13.36	0.05
237	SLE RA 11	22	109	1789	-5.83	13.82	0.05
237	SLE RA 12	22	107	1774	-5.71	13.71	0.05

Nodo	Cont.	Reazione a traslazione			Reazione a rotazione		
Ind.	N.br.	x	y	z	x	y	z
237	SLE RA 13	22	106	1756	-5.62	13.54	0.05
237	SLE RA 14	22	110	1807	-5.87	14	0.05
237	SLE RA 15	22	108	1792	-5.75	13.89	0.05
237	SLE RA 16	22	110	1799	-5.86	13.9	0.05
237	SLE RA 17	22	108	1784	-5.74	13.79	0.05
237	SLE RA 18	23	109	1804	-5.85	14.04	0.06
237	SLE RA 19	22	107	1790	-5.73	13.94	0.05
237	SLE RA 20	23	110	1823	-5.89	14.22	0.06
237	SLE RA 21	23	108	1808	-5.77	14.12	0.06
237	SLE FR 1	20	106	1665	-5.59	12.35	0.05
237	SLE FR 2	20	105	1660	-5.55	12.32	0.05
237	SLE FR 3	20	106	1672	-5.61	12.43	0.05
237	SLE FR 4	21	106	1702	-5.63	12.82	0.05
237	SLE FR 5	21	107	1714	-5.69	12.93	0.05
237	SLE FR 6	21	108	1735	-5.72	13.2	0.05
237	SLE QP 1	20	106	1665	-5.59	12.35	0.05
237	SLE QP 2	21	107	1707	-5.67	12.86	0.05
237	SLD 1	18	96	1602	-5.1	10.28	0.04
237	SLD 2	18	96	1602	-5.1	10.28	0.04
237	SLD 3	12	-201	479	11.26	5.93	0.03
237	SLD 4	12	-201	479	11.26	5.93	0.03
237	SLD 5	29	554	3379	-30.31	18.69	0.08
237	SLD 6	29	554	3379	-30.31	18.69	0.08
237	SLD 7	9	-436	-365	24.22	4.18	0.02
237	SLD 8	9	-436	-365	24.22	4.18	0.02
237	SLD 9	32	650	3779	-35.56	21.54	0.09
237	SLD 10	32	650	3779	-35.56	21.54	0.09
237	SLD 11	13	-340	34	18.97	7.03	0.03
237	SLD 12	13	-340	34	18.97	7.03	0.03
237	SLD 13	29	415	2934	-22.6	19.79	0.08
237	SLD 14	29	415	2934	-22.6	19.79	0.08
237	SLD 15	23	118	1811	-6.24	15.44	0.06
237	SLD 16	23	118	1811	-6.24	15.44	0.06
237	SLV 1	15	81	1461	-4.32	7.05	0.03
237	SLV 2	15	81	1461	-4.32	7.05	0.03
237	SLV 3	0	-620	-1190	34.28	-3.75	-0.01
237	SLV 4	0	-620	-1190	34.28	-3.75	-0.01
237	SLV 5	41	1161	5654	-63.81	27.5	0.11
237	SLV 6	41	1161	5654	-63.81	27.5	0.11
237	SLV 7	-7	-1173	-3183	64.86	-8.5	-0.04
237	SLV 8	-7	-1173	-3183	64.86	-8.5	-0.04
237	SLV 9	49	1387	6596	-76.2	34.22	0.14
237	SLV 10	49	1387	6596	-76.2	34.22	0.14
237	SLV 11	0	-948	-2240	52.47	-1.78	-0.01
237	SLV 12	0	-948	-2240	52.47	-1.78	-0.01
237	SLV 13	41	833	4604	-45.62	29.47	0.11
237	SLV 14	41	833	4604	-45.62	29.47	0.11
237	SLV 15	26	133	1953	-7.02	18.67	0.07
237	SLV 16	26	133	1953	-7.02	18.67	0.07
238	SLU 1	9	-277	4825	11.35	7.48	-0.01
238	SLU 2	11	-175	4736	7.09	9.22	-0.01
238	SLU 3	10	-285	4987	11.7	7.78	-0.01
238	SLU 4	11	-224	4934	9.14	8.82	-0.01
238	SLU 5	11	-179	4853	7.24	9.43	-0.01
238	SLU 6	10	-288	5104	11.85	7.99	-0.01
238	SLU 7	11	-227	5051	9.29	9.03	-0.01
238	SLU 8	10	-283	5060	11.65	7.9	-0.01
238	SLU 9	11	-222	5007	9.09	8.94	-0.01
238	SLU 10	12	-219	5271	8.87	10.25	-0.01
238	SLU 11	11	-329	5521	13.48	8.8	-0.01
238	SLU 12	12	-268	5468	10.92	9.85	-0.01
238	SLU 13	13	-223	5388	9.02	10.46	-0.01
238	SLU 14	11	-332	5639	13.64	9.01	-0.01
238	SLU 15	12	-271	5586	11.08	10.06	-0.01
238	SLU 16	11	-327	5595	13.44	8.93	-0.01
238	SLU 17	12	-266	5541	10.88	9.97	-0.01
238	SLU 18	11	-339	5589	13.9	8.95	-0.01
238	SLU 19	12	-279	5535	11.34	9.99	-0.01
238	SLU 20	11	-343	5706	14.05	9.16	-0.01
238	SLU 21	12	-282	5653	11.49	10.2	-0.01
238	SLU 22	11	-318	5359	13.06	8.49	-0.01
238	SLU 23	12	-217	5270	8.79	10.23	-0.01
238	SLU 24	11	-327	5521	13.41	8.79	-0.01
238	SLU 25	12	-266	5468	10.85	9.83	-0.01
238	SLU 26	13	-220	5388	8.94	10.44	-0.01
238	SLU 27	11	-330	5638	13.56	9	-0.01
238	SLU 28	12	-269	5585	11	10.04	-0.01
238	SLU 29	11	-325	5594	13.36	8.91	-0.01
238	SLU 30	12	-264	5541	10.8	9.95	-0.01
238	SLU 31	14	-261	5805	10.58	11.26	-0.01
238	SLU 32	12	-370	6056	15.19	9.81	-0.01
238	SLU 33	13	-310	6002	12.63	10.86	-0.01
238	SLU 34	14	-264	5922	10.73	11.47	-0.01
238	SLU 35	12	-374	6173	15.34	10.02	-0.01
238	SLU 36	13	-313	6120	12.78	11.07	-0.01
238	SLU 37	12	-369	6129	15.15	9.94	-0.01
238	SLU 38	13	-308	6075	12.59	10.98	-0.01
238	SLU 39	12	-381	6123	15.61	9.96	-0.01
238	SLU 40	13	-321	6069	13.05	11	-0.01
238	SLU 41	13	-384	6240	15.76	10.17	-0.01
238	SLU 42	14	-324	6187	13.2	11.21	-0.01

Nodo	Cont.	Reazione a traslazione			Reazione a rotazione		
Ind.	N.br.	x	y	z	x	y	z
238	SLU 43	12	-345	6089	14.17	9.38	-0.01
238	SLU 44	13	-244	6000	9.9	11.12	-0.01
238	SLU 45	12	-353	6251	14.52	9.67	-0.01
238	SLU 46	13	-293	6198	11.96	10.72	-0.01
238	SLU 47	14	-247	6118	10.06	11.33	-0.01
238	SLU 48	12	-356	6369	14.67	9.88	-0.01
238	SLU 49	13	-296	6315	12.11	10.93	-0.01
238	SLU 50	12	-352	6324	14.47	9.8	-0.01
238	SLU 51	13	-291	6271	11.91	10.84	-0.01
238	SLU 52	15	-288	6535	11.69	12.15	-0.01
238	SLU 53	13	-397	6786	16.3	10.7	-0.01
238	SLU 54	14	-337	6733	13.74	11.75	-0.01
238	SLU 55	15	-291	6652	11.84	12.36	-0.01
238	SLU 56	14	-400	6903	16.45	10.91	-0.01
238	SLU 57	15	-340	6850	13.9	11.96	-0.01
238	SLU 58	13	-396	6859	16.26	10.83	-0.01
238	SLU 59	14	-335	6806	13.7	11.87	-0.01
238	SLU 60	13	-408	6853	16.72	10.85	-0.01
238	SLU 61	14	-347	6800	14.16	11.89	-0.01
238	SLU 62	14	-411	6970	16.87	11.06	-0.01
238	SLU 63	15	-350	6917	14.31	12.1	-0.01
238	SLU 64	13	-387	6623	15.88	10.39	-0.01
238	SLU 65	15	-286	6534	11.61	12.13	-0.01
238	SLU 66	13	-395	6785	16.23	10.68	-0.01
238	SLU 67	14	-334	6732	13.67	11.73	-0.01
238	SLU 68	15	-289	6652	11.76	12.34	-0.01
238	SLU 69	14	-398	6903	16.38	10.89	-0.01
238	SLU 70	15	-338	6849	13.82	11.94	-0.01
238	SLU 71	13	-393	6858	16.18	10.81	-0.01
238	SLU 72	14	-333	6805	13.62	11.85	-0.01
238	SLU 73	16	-330	7069	13.4	13.16	-0.01
238	SLU 74	14	-439	7320	18.01	11.71	-0.01
238	SLU 75	16	-378	7267	15.45	12.76	-0.01
238	SLU 76	16	-333	7187	13.55	13.37	-0.01
238	SLU 77	15	-442	7437	18.16	11.92	-0.01
238	SLU 78	16	-382	7384	15.6	12.97	-0.01
238	SLU 79	15	-437	7393	17.96	11.84	-0.01
238	SLU 80	16	-377	7340	15.41	12.88	-0.01
238	SLU 81	15	-450	7387	18.43	11.86	-0.01
238	SLU 82	16	-389	7334	15.87	12.9	-0.01
238	SLU 83	15	-453	7504	18.58	12.07	-0.01
238	SLU 84	16	-392	7451	16.02	13.11	-0.01
238	SLE RA 1	10	-288	4977	11.84	7.77	-0.01
238	SLE RA 2	11	-221	4918	8.99	8.93	-0.01
238	SLE RA 3	10	-294	5085	12.07	7.97	-0.01
238	SLE RA 4	11	-253	5050	10.37	8.66	-0.01
238	SLE RA 5	11	-223	4996	9.1	9.07	-0.01
238	SLE RA 6	10	-296	5164	12.17	8.11	-0.01
238	SLE RA 7	11	-256	5128	10.47	8.8	-0.01
238	SLE RA 8	10	-293	5134	12.04	8.05	-0.01
238	SLE RA 9	11	-252	5099	10.33	8.75	-0.01
238	SLE RA 10	12	-250	5275	10.18	9.61	-0.01
238	SLE RA 11	11	-323	5442	13.26	8.65	-0.01
238	SLE RA 12	11	-283	5406	11.55	9.35	-0.01
238	SLE RA 13	12	-253	5353	10.29	9.75	-0.01
238	SLE RA 14	11	-325	5520	13.36	8.79	-0.01
238	SLE RA 15	12	-285	5485	11.66	9.49	-0.01
238	SLE RA 16	11	-322	5490	13.23	8.74	-0.01
238	SLE RA 17	12	-282	5455	11.52	9.43	-0.01
238	SLE RA 18	11	-330	5486	13.54	8.75	-0.01
238	SLE RA 19	12	-290	5451	11.83	9.44	-0.01
238	SLE RA 20	11	-332	5565	13.64	8.89	-0.01
238	SLE RA 21	12	-292	5529	11.93	9.58	-0.01
238	SLE FR 1	10	-288	4977	11.84	7.77	-0.01
238	SLE FR 2	10	-275	4965	11.27	8	-0.01
238	SLE FR 3	10	-289	5009	11.88	7.83	-0.01
238	SLE FR 4	10	-288	5118	11.78	8.3	-0.01
238	SLE FR 5	10	-302	5161	12.39	8.12	-0.01
238	SLE FR 6	10	-309	5232	12.69	8.26	-0.01
238	SLE QP 1	10	-288	4977	11.84	7.77	-0.01
238	SLE QP 2	10	-301	5130	12.35	8.06	-0.01
238	SLD 1	19	-139	6119	5.13	19.44	-0.02
238	SLD 2	19	-139	6119	5.13	19.44	-0.02
238	SLD 3	25	-693	6385	28.71	25.94	-0.02
238	SLD 4	25	-693	6385	28.71	25.94	-0.02
238	SLD 5	5	588	5023	-25.59	1.62	0
238	SLD 6	5	588	5023	-25.59	1.62	0
238	SLD 7	23	-1259	5911	53.03	23.29	-0.02
238	SLD 8	23	-1259	5911	53.03	23.29	-0.02
238	SLD 9	-3	657	4349	-28.33	-7.16	0
238	SLD 10	-3	657	4349	-28.33	-7.16	0
238	SLD 11	15	-1190	5237	50.28	14.51	-0.01
238	SLD 12	15	-1190	5237	50.28	14.51	-0.01
238	SLD 13	-5	91	3875	-4.02	-9.82	0.01
238	SLD 14	-5	91	3875	-4.02	-9.82	0.01
238	SLD 15	0	-463	4141	19.57	-3.31	0
238	SLD 16	0	-463	4141	19.57	-3.31	0
238	SLV 1	32	73	7405	-4.32	34.81	-0.03
238	SLV 2	32	73	7405	-4.32	34.81	-0.03
238	SLV 3	46	-1219	8035	50.63	51.01	-0.04
238	SLV 4	46	-1219	8035	50.63	51.01	-0.04

Nodo	Cont.	Reazione a traslazione			Reazione a rotazione		
Ind.	N.br.	x	y	z	x	y	z
238	SLV 5	-4	1770	4856	-76.01	-8.49	0
238	SLV 6	-4	1770	4856	-76.01	-8.49	0
238	SLV 7	41	-2535	6958	107.19	45.52	-0.03
238	SLV 8	41	-2535	6958	107.19	45.52	-0.03
238	SLV 9	-21	1933	3302	-82.49	-29.4	0.02
238	SLV 10	-21	1933	3302	-82.49	-29.4	0.02
238	SLV 11	24	-2372	5404	100.7	24.62	-0.01
238	SLV 12	24	-2372	5404	100.7	24.62	-0.01
238	SLV 13	-26	617	2225	-25.94	-34.88	0.03
238	SLV 14	-26	617	2225	-25.94	-34.88	0.03
238	SLV 15	-12	-675	2855	29.02	-18.68	0.02
238	SLV 16	-12	-675	2855	29.02	-18.68	0.02
239	SLU 1	10	-429	5627	17.6	6.68	0
239	SLU 2	9	-328	5511	13.34	5.02	0
239	SLU 3	11	-445	5824	18.27	6.93	0
239	SLU 4	10	-385	5755	15.72	5.93	0
239	SLU 5	9	-338	5654	13.76	5.2	0
239	SLU 6	11	-455	5967	18.7	7.11	0
239	SLU 7	10	-395	5897	16.14	6.11	0
239	SLU 8	11	-449	5912	18.46	7.04	0
239	SLU 9	10	-389	5843	15.9	6.04	0
239	SLU 10	10	-408	6186	16.52	5.84	0
239	SLU 11	12	-525	6499	21.46	7.75	0
239	SLU 12	11	-464	6429	18.9	6.75	0
239	SLU 13	10	-418	6328	16.95	6.02	0
239	SLU 14	12	-535	6641	21.89	7.93	0
239	SLU 15	11	-474	6572	19.33	6.93	0
239	SLU 16	12	-529	6587	21.64	7.87	0
239	SLU 17	11	-468	6517	19.08	6.87	0
239	SLU 18	12	-542	6591	22.15	7.86	0
239	SLU 19	11	-482	6521	19.59	6.86	0
239	SLU 20	13	-552	6733	22.58	8.04	0
239	SLU 21	12	-492	6664	20.02	7.04	0
239	SLU 22	12	-502	6293	20.57	7.5	0
239	SLU 23	10	-402	6177	16.3	5.84	0
239	SLU 24	12	-519	6490	21.24	7.75	0
239	SLU 25	11	-458	6421	18.68	6.75	0
239	SLU 26	10	-412	6320	16.73	6.02	0
239	SLU 27	12	-529	6633	21.67	7.93	0
239	SLU 28	11	-468	6563	19.11	6.93	0
239	SLU 29	12	-523	6578	21.42	7.87	0
239	SLU 30	11	-462	6508	18.86	6.87	0
239	SLU 31	11	-481	6852	19.49	6.66	0
239	SLU 32	13	-598	7165	24.42	8.57	0
239	SLU 33	12	-538	7095	21.87	7.57	0
239	SLU 34	12	-491	6994	19.91	6.84	0
239	SLU 35	14	-608	7307	24.85	8.75	0
239	SLU 36	13	-548	7237	22.29	7.75	0
239	SLU 37	14	-602	7252	24.61	8.69	0
239	SLU 38	13	-542	7183	22.05	7.69	0
239	SLU 39	14	-616	7257	25.12	8.68	0
239	SLU 40	13	-555	7187	22.56	7.68	0
239	SLU 41	14	-626	7399	25.54	8.86	0
239	SLU 42	13	-566	7330	22.99	7.86	0
239	SLU 43	13	-532	7087	21.87	8.41	0
239	SLU 44	11	-432	6971	17.6	6.74	0
239	SLU 45	13	-549	7284	22.54	8.65	0
239	SLU 46	12	-488	7215	19.98	7.65	0
239	SLU 47	12	-442	7114	18.03	6.92	0
239	SLU 48	14	-559	7427	22.97	8.83	0
239	SLU 49	13	-498	7357	20.41	7.83	0
239	SLU 50	14	-553	7372	22.72	8.77	0
239	SLU 51	13	-492	7303	20.16	7.77	0
239	SLU 52	13	-511	7646	20.79	7.56	0
239	SLU 53	15	-628	7959	25.72	9.48	0
239	SLU 54	14	-568	7889	23.17	8.48	0
239	SLU 55	13	-521	7788	21.21	7.74	0
239	SLU 56	15	-638	8101	26.15	9.66	0
239	SLU 57	14	-578	8032	23.59	8.66	0
239	SLU 58	15	-632	8047	25.91	9.59	0
239	SLU 59	14	-572	7977	23.35	8.59	0
239	SLU 60	15	-646	8051	26.42	9.58	0
239	SLU 61	14	-585	7981	23.86	8.58	0
239	SLU 62	15	-656	8193	26.84	9.76	0
239	SLU 63	14	-596	8124	24.29	8.76	0
239	SLU 64	14	-606	7753	24.83	9.23	0
239	SLU 65	13	-505	7637	20.57	7.56	0
239	SLU 66	15	-622	7950	25.5	9.47	0
239	SLU 67	14	-562	7881	22.95	8.47	0
239	SLU 68	13	-515	7780	20.99	7.74	0
239	SLU 69	15	-632	8093	25.93	9.65	0
239	SLU 70	14	-572	8023	23.37	8.65	0
239	SLU 71	15	-626	8038	25.69	9.59	0
239	SLU 72	14	-566	7968	23.13	8.59	0
239	SLU 73	14	-585	8312	23.75	8.39	0
239	SLU 74	16	-702	8625	28.69	10.3	0
239	SLU 75	15	-641	8555	26.13	9.3	0
239	SLU 76	14	-595	8454	24.18	8.57	0
239	SLU 77	16	-712	8767	29.12	10.48	0
239	SLU 78	15	-651	8697	26.56	9.48	0
239	SLU 79	16	-706	8712	28.87	10.41	0

Nodo	Cont.	Reazione a traslazione			Reazione a rotazione		
Ind.	N.br.	x	y	z	x	y	z
239	SLU 80	15	-645	8643	26.31	9.41	0
239	SLU 81	16	-719	8717	29.38	10.4	0
239	SLU 82	15	-659	8647	26.82	9.41	0
239	SLU 83	17	-729	8859	29.81	10.58	0
239	SLU 84	16	-669	8789	27.25	9.59	0
239	SLE RA 1	11	-450	5818	18.45	6.92	0
239	SLE RA 2	10	-383	5740	15.61	5.81	0
239	SLE RA 3	11	-461	5949	18.9	7.08	0
239	SLE RA 4	10	-421	5903	17.19	6.42	0
239	SLE RA 5	10	-390	5835	15.89	5.93	0
239	SLE RA 6	11	-468	6044	19.18	7.2	0
239	SLE RA 7	11	-427	5997	17.48	6.54	0
239	SLE RA 8	11	-463	6008	19.02	7.16	0
239	SLE RA 9	11	-423	5961	17.31	6.49	0
239	SLE RA 10	11	-436	6190	17.73	6.36	0
239	SLE RA 11	12	-514	6399	21.02	7.63	0
239	SLE RA 12	11	-473	6352	19.32	6.96	0
239	SLE RA 13	11	-443	6285	18.01	6.48	0
239	SLE RA 14	12	-520	6494	21.31	7.75	0
239	SLE RA 15	11	-480	6447	19.6	7.08	0
239	SLE RA 16	12	-516	6457	21.14	7.71	0
239	SLE RA 17	11	-476	6411	19.44	7.04	0
239	SLE RA 18	12	-526	6460	21.48	7.7	0
239	SLE RA 19	11	-485	6414	19.78	7.04	0
239	SLE RA 20	12	-532	6555	21.77	7.82	0
239	SLE RA 21	12	-492	6509	20.06	7.16	0
239	SLE FR 1	11	-450	5818	18.45	6.92	0
239	SLE FR 2	11	-437	5802	17.88	6.7	0
239	SLE FR 3	11	-453	5856	18.56	6.97	0
239	SLE FR 4	11	-459	5995	18.79	6.93	0
239	SLE FR 5	11	-475	6048	19.47	7.2	0
239	SLE FR 6	11	-488	6139	19.97	7.31	0
239	SLE QP 1	11	-450	5818	18.45	6.92	0
239	SLE QP 2	11	-473	6010	19.36	7.15	0
239	SLD 1	4	32	4494	-1.87	16.74	-0.01
239	SLD 2	4	32	4494	-1.87	16.74	-0.01
239	SLD 3	-2	-525	4629	21.98	22.33	-0.01
239	SLD 4	-2	-525	4629	21.98	22.33	-0.01
239	SLD 5	18	525	5350	-23.18	1.56	0
239	SLD 6	18	525	5350	-23.18	1.56	0
239	SLD 7	-2	-1334	5801	56.32	20.18	-0.01
239	SLD 8	-2	-1334	5801	56.32	20.18	-0.01
239	SLD 9	24	389	6219	-17.6	-5.87	0.01
239	SLD 10	24	389	6219	-17.6	-5.87	0.01
239	SLD 11	4	-1470	6671	61.9	12.75	0
239	SLD 12	4	-1470	6671	61.9	12.75	0
239	SLD 13	24	-420	7392	16.74	-8.02	0.01
239	SLD 14	24	-420	7392	16.74	-8.02	0.01
239	SLD 15	18	-978	7527	40.59	-2.43	0.01
239	SLD 16	18	-978	7527	40.59	-2.43	0.01
239	SLV 1	-5	694	2510	-29.72	29.5	-0.02
239	SLV 2	-5	694	2510	-29.72	29.5	-0.02
239	SLV 3	-20	-606	2836	25.89	43.63	-0.03
239	SLV 4	-20	-606	2836	25.89	43.63	-0.03
239	SLV 5	30	1850	4465	-79.71	-7.57	0
239	SLV 6	30	1850	4465	-79.71	-7.57	0
239	SLV 7	-22	-2485	5553	105.66	39.52	-0.02
239	SLV 8	-22	-2485	5553	105.66	39.52	-0.02
239	SLV 9	44	1540	6467	-66.94	-25.21	0.02
239	SLV 10	44	1540	6467	-66.94	-25.21	0.02
239	SLV 11	-8	-2795	7556	118.43	21.87	-0.01
239	SLV 12	-8	-2795	7556	118.43	21.87	-0.01
239	SLV 13	43	-339	9185	12.83	-29.32	0.02
239	SLV 14	43	-339	9185	12.83	-29.32	0.02
239	SLV 15	27	-1640	9511	68.44	-15.2	0.02
239	SLV 16	27	-1640	9511	68.44	-15.2	0.02
240	SLU 1	11	288	2776	-15.47	7.67	-0.13
240	SLU 2	11	278	2688	-14.76	7.6	-0.13
240	SLU 3	12	292	2841	-15.64	7.92	-0.14
240	SLU 4	11	286	2788	-15.21	7.88	-0.13
240	SLU 5	11	279	2722	-14.73	7.75	-0.13
240	SLU 6	12	293	2875	-15.61	8.07	-0.14
240	SLU 7	12	287	2822	-15.18	8.03	-0.14
240	SLU 8	12	289	2844	-15.41	7.97	-0.14
240	SLU 9	12	284	2791	-14.98	7.93	-0.14
240	SLU 10	13	312	3017	-16.64	8.71	-0.15
240	SLU 11	13	326	3171	-17.52	9.04	-0.15
240	SLU 12	13	320	3118	-17.09	8.99	-0.15
240	SLU 13	13	313	3052	-16.61	8.86	-0.15
240	SLU 14	13	327	3205	-17.49	9.19	-0.16
240	SLU 15	13	321	3152	-17.06	9.14	-0.16
240	SLU 16	13	323	3174	-17.29	9.09	-0.16
240	SLU 17	13	317	3121	-16.86	9.04	-0.15
240	SLU 18	13	336	3247	-18.16	9.26	-0.16
240	SLU 19	13	330	3194	-17.73	9.22	-0.16
240	SLU 20	14	337	3281	-18.12	9.41	-0.16
240	SLU 21	14	331	3228	-17.7	9.37	-0.16
240	SLU 22	13	321	3107	-17.29	8.79	-0.15
240	SLU 23	13	311	3019	-16.58	8.71	-0.15
240	SLU 24	13	325	3172	-17.46	9.04	-0.16
240	SLU 25	13	319	3119	-17.04	9	-0.15

Nodo	Cont.	Reazione a traslazione			Reazione a rotazione		
Ind.	N.br.	x	y	z	x	y	z
240	SLU 26	13	312	3053	-16.55	8.86	-0.15
240	SLU 27	13	326	3206	-17.43	9.19	-0.16
240	SLU 28	13	320	3153	-17	9.15	-0.16
240	SLU 29	13	322	3175	-17.23	9.09	-0.16
240	SLU 30	13	316	3122	-16.8	9.05	-0.16
240	SLU 31	14	345	3348	-18.46	9.83	-0.17
240	SLU 32	15	359	3502	-19.34	10.15	-0.17
240	SLU 33	15	353	3449	-18.92	10.11	-0.17
240	SLU 34	14	345	3382	-18.43	9.98	-0.17
240	SLU 35	15	359	3536	-19.31	10.31	-0.18
240	SLU 36	15	354	3483	-18.88	10.26	-0.18
240	SLU 37	15	356	3504	-19.11	10.21	-0.18
240	SLU 38	15	350	3452	-18.68	10.16	-0.17
240	SLU 39	15	369	3578	-19.98	10.38	-0.18
240	SLU 40	15	363	3525	-19.55	10.33	-0.18
240	SLU 41	15	370	3612	-19.95	10.53	-0.18
240	SLU 42	15	364	3559	-19.52	10.49	-0.18
240	SLU 43	14	363	3495	-19.49	9.59	-0.16
240	SLU 44	14	353	3407	-18.78	9.51	-0.16
240	SLU 45	14	367	3560	-19.66	9.84	-0.17
240	SLU 46	14	362	3508	-19.23	9.8	-0.17
240	SLU 47	14	354	3441	-18.75	9.66	-0.16
240	SLU 48	15	368	3594	-19.62	9.99	-0.17
240	SLU 49	14	362	3542	-19.2	9.95	-0.17
240	SLU 50	14	365	3563	-19.42	9.89	-0.17
240	SLU 51	14	359	3510	-19	9.85	-0.17
240	SLU 52	15	387	3737	-20.66	10.63	-0.18
240	SLU 53	16	401	3890	-21.54	10.96	-0.19
240	SLU 54	16	395	3837	-21.11	10.91	-0.19
240	SLU 55	16	388	3771	-20.63	10.78	-0.18
240	SLU 56	16	402	3924	-21.5	11.11	-0.19
240	SLU 57	16	396	3871	-21.08	11.06	-0.19
240	SLU 58	16	398	3893	-21.3	11.01	-0.19
240	SLU 59	16	392	3840	-20.88	10.96	-0.19
240	SLU 60	16	411	3966	-22.17	11.18	-0.19
240	SLU 61	16	405	3913	-21.75	11.13	-0.19
240	SLU 62	16	412	4000	-22.14	11.33	-0.19
240	SLU 63	16	406	3947	-21.72	11.29	-0.19
240	SLU 64	16	396	3826	-21.31	10.71	-0.18
240	SLU 65	15	386	3738	-20.6	10.63	-0.18
240	SLU 66	16	400	3891	-21.48	10.96	-0.19
240	SLU 67	16	394	3838	-21.05	10.91	-0.19
240	SLU 68	16	387	3772	-20.57	10.78	-0.18
240	SLU 69	16	401	3925	-21.45	11.11	-0.19
240	SLU 70	16	395	3872	-21.02	11.07	-0.19
240	SLU 71	16	397	3894	-21.24	11.01	-0.19
240	SLU 72	16	392	3841	-20.82	10.96	-0.19
240	SLU 73	17	420	4068	-22.48	11.74	-0.2
240	SLU 74	18	434	4221	-23.36	12.07	-0.21
240	SLU 75	17	428	4168	-22.93	12.03	-0.21
240	SLU 76	17	421	4102	-22.45	11.9	-0.2
240	SLU 77	18	435	4255	-23.33	12.22	-0.21
240	SLU 78	18	429	4202	-22.9	12.18	-0.21
240	SLU 79	18	431	4224	-23.13	12.12	-0.21
240	SLU 80	18	425	4171	-22.7	12.08	-0.21
240	SLU 81	18	444	4297	-24	12.3	-0.21
240	SLU 82	18	438	4244	-23.57	12.25	-0.21
240	SLU 83	18	445	4331	-23.96	12.45	-0.21
240	SLU 84	18	439	4278	-23.54	12.4	-0.21
240	SLE RA 1	12	297	2870	-15.99	7.99	-0.14
240	SLE RA 2	12	291	2812	-15.52	7.94	-0.14
240	SLE RA 3	12	300	2914	-16.1	8.16	-0.14
240	SLE RA 4	12	296	2879	-15.82	8.13	-0.14
240	SLE RA 5	12	291	2834	-15.5	8.04	-0.14
240	SLE RA 6	12	301	2937	-16.08	8.26	-0.14
240	SLE RA 7	12	297	2901	-15.8	8.23	-0.14
240	SLE RA 8	12	298	2916	-15.95	8.19	-0.14
240	SLE RA 9	12	294	2881	-15.66	8.16	-0.14
240	SLE RA 10	13	313	3031	-16.77	8.68	-0.15
240	SLE RA 11	13	323	3134	-17.36	8.9	-0.15
240	SLE RA 12	13	319	3098	-17.07	8.87	-0.15
240	SLE RA 13	13	314	3054	-16.75	8.78	-0.15
240	SLE RA 14	13	323	3156	-17.34	9	-0.15
240	SLE RA 15	13	319	3121	-17.05	8.97	-0.15
240	SLE RA 16	13	321	3135	-17.2	8.94	-0.15
240	SLE RA 17	13	317	3100	-16.92	8.9	-0.15
240	SLE RA 18	13	329	3184	-17.78	9.05	-0.15
240	SLE RA 19	13	326	3149	-17.5	9.02	-0.15
240	SLE RA 20	13	330	3207	-17.76	9.15	-0.16
240	SLE RA 21	13	326	3172	-17.48	9.12	-0.16
240	SLE FR 1	12	297	2870	-15.99	7.99	-0.14
240	SLE FR 2	12	296	2859	-15.9	7.98	-0.14
240	SLE FR 3	12	298	2879	-15.98	8.03	-0.14
240	SLE FR 4	12	306	2953	-16.43	8.3	-0.14
240	SLE FR 5	12	307	2974	-16.52	8.35	-0.14
240	SLE FR 6	12	313	3027	-16.89	8.52	-0.15
240	SLE QP 1	12	297	2870	-15.99	7.99	-0.14
240	SLE QP 2	12	307	2964	-16.53	8.31	-0.14
240	SLD 1	21	349	3073	-19.79	16.1	-0.23
240	SLD 2	21	349	3073	-19.79	16.1	-0.23
240	SLD 3	17	-32	1570	7.35	13.35	-0.18

Nodo	Cont.	Reazione a traslazione			Reazione a rotazione		
Ind.	N.br.	x	y	z	x	y	z
240	SLD 4	17	-32	1570	7.35	13.35	-0.18
240	SLD 5	20	898	5276	-58.67	14.83	-0.24
240	SLD 6	20	898	5276	-58.67	14.83	-0.24
240	SLD 7	8	-373	267	31.8	5.64	-0.08
240	SLD 8	8	-373	267	31.8	5.64	-0.08
240	SLD 9	16	987	5662	-64.86	10.98	-0.2
240	SLD 10	16	987	5662	-64.86	10.98	-0.2
240	SLD 11	4	-284	653	25.61	1.79	-0.04
240	SLD 12	4	-284	653	25.61	1.79	-0.04
240	SLD 13	7	646	4359	-40.41	3.27	-0.1
240	SLD 14	7	646	4359	-40.41	3.27	-0.1
240	SLD 15	3	265	2856	-13.27	0.51	-0.06
240	SLD 16	3	265	2856	-13.27	0.51	-0.06
240	SLV 1	33	405	3187	-24.12	27.44	-0.35
240	SLV 2	33	405	3187	-24.12	27.44	-0.35
240	SLV 3	25	-496	-368	40.01	20.58	-0.23
240	SLV 4	25	-496	-368	40.01	20.58	-0.23
240	SLV 5	31	1703	8423	-116.07	24.45	-0.39
240	SLV 6	31	1703	8423	-116.07	24.45	-0.39
240	SLV 7	3	-1300	-3427	97.69	1.59	0.01
240	SLV 8	3	-1300	-3427	97.69	1.59	0.01
240	SLV 9	21	1914	9356	-130.75	15.03	-0.3
240	SLV 10	21	1914	9356	-130.75	15.03	-0.3
240	SLV 11	-7	-1089	-2494	83.01	-7.83	0.1
240	SLV 12	-7	-1089	-2494	83.01	-7.83	0.1
240	SLV 13	0	1110	6297	-73.07	-3.96	-0.05
240	SLV 14	0	1110	6297	-73.07	-3.96	-0.05
240	SLV 15	-9	209	2742	-8.94	-10.82	0.07
240	SLV 16	-9	209	2742	-8.94	-10.82	0.07
241	SLU 1	0	218	2689	-9.71	0.47	0
241	SLU 2	0	218	2685	-9.72	0.46	0
241	SLU 3	0	222	2732	-9.92	0.48	0
241	SLU 4	0	223	2730	-9.93	0.48	0
241	SLU 5	0	220	2682	-9.81	0.47	0
241	SLU 6	0	225	2729	-10.01	0.48	0
241	SLU 7	0	225	2726	-10.02	0.48	0
241	SLU 8	0	222	2683	-9.89	0.47	0
241	SLU 9	0	222	2681	-9.89	0.47	0
241	SLU 10	1	254	3135	-11.32	0.58	0
241	SLU 11	1	259	3182	-11.52	0.6	0
241	SLU 12	1	259	3179	-11.53	0.6	0
241	SLU 13	1	256	3132	-11.41	0.59	0
241	SLU 14	1	261	3179	-11.61	0.6	0
241	SLU 15	1	261	3176	-11.62	0.6	0
241	SLU 16	1	258	3133	-11.49	0.59	0
241	SLU 17	1	258	3130	-11.5	0.59	0
241	SLU 18	1	269	3332	-12	0.63	0
241	SLU 19	1	270	3329	-12	0.63	0
241	SLU 20	1	272	3329	-12.09	0.64	0
241	SLU 21	1	272	3326	-12.09	0.64	0
241	SLU 22	1	253	3151	-11.3	0.58	0
241	SLU 23	1	253	3147	-11.31	0.58	0
241	SLU 24	1	258	3193	-11.52	0.59	0
241	SLU 25	1	258	3191	-11.52	0.59	0
241	SLU 26	1	256	3143	-11.4	0.58	0
241	SLU 27	1	260	3190	-11.61	0.6	0
241	SLU 28	1	260	3188	-11.61	0.6	0
241	SLU 29	1	257	3145	-11.48	0.59	0
241	SLU 30	1	258	3142	-11.49	0.59	0
241	SLU 31	1	290	3596	-12.92	0.7	0
241	SLU 32	1	294	3643	-13.12	0.71	0
241	SLU 33	1	294	3641	-13.13	0.71	0
241	SLU 34	1	292	3593	-13.01	0.7	0
241	SLU 35	1	296	3640	-13.21	0.72	0
241	SLU 36	1	296	3638	-13.22	0.71	0
241	SLU 37	1	294	3594	-13.09	0.71	0
241	SLU 38	1	294	3592	-13.09	0.71	0
241	SLU 39	1	305	3793	-13.59	0.75	0
241	SLU 40	1	305	3791	-13.6	0.75	0
241	SLU 41	1	307	3790	-13.68	0.75	0
241	SLU 42	1	307	3788	-13.69	0.75	0
241	SLU 43	1	271	3338	-12.07	0.57	0
241	SLU 44	1	271	3334	-12.08	0.56	0
241	SLU 45	1	276	3381	-12.29	0.58	0
241	SLU 46	1	276	3378	-12.29	0.58	0
241	SLU 47	1	273	3331	-12.17	0.57	0
241	SLU 48	1	278	3378	-12.38	0.58	0
241	SLU 49	1	278	3375	-12.38	0.58	0
241	SLU 50	1	275	3332	-12.25	0.57	0
241	SLU 51	1	275	3329	-12.26	0.57	0
241	SLU 52	1	308	3783	-13.69	0.68	0
241	SLU 53	1	312	3830	-13.89	0.7	0
241	SLU 54	1	312	3828	-13.9	0.7	0
241	SLU 55	1	310	3780	-13.77	0.69	0
241	SLU 56	1	314	3827	-13.98	0.7	0
241	SLU 57	1	314	3825	-13.99	0.7	0
241	SLU 58	1	311	3782	-13.86	0.69	0
241	SLU 59	1	312	3779	-13.86	0.69	0
241	SLU 60	1	323	3980	-14.36	0.74	0
241	SLU 61	1	323	3978	-14.37	0.73	0
241	SLU 62	1	325	3977	-14.45	0.74	0

Nodo	Cont.	Reazione a traslazione			Reazione a rotazione		
Ind.	N.br.	x	y	z	x	y	z
241	SLU 63	1	325	3975	-14.46	0.74	0
241	SLU 64	1	306	3799	-13.67	0.68	0
241	SLU 65	1	307	3795	-13.68	0.68	0
241	SLU 66	1	311	3842	-13.88	0.69	0
241	SLU 67	1	311	3840	-13.89	0.69	0
241	SLU 68	1	309	3792	-13.77	0.68	0
241	SLU 69	1	313	3839	-13.97	0.7	0
241	SLU 70	1	313	3836	-13.98	0.7	0
241	SLU 71	1	311	3793	-13.85	0.69	0
241	SLU 72	1	311	3791	-13.85	0.69	0
241	SLU 73	1	343	4245	-15.28	0.8	0
241	SLU 74	1	347	4292	-15.49	0.81	0
241	SLU 75	1	347	4289	-15.49	0.81	0
241	SLU 76	1	345	4242	-15.37	0.8	0
241	SLU 77	1	349	4289	-15.57	0.82	0
241	SLU 78	1	350	4286	-15.58	0.82	0
241	SLU 79	1	347	4243	-15.45	0.81	0
241	SLU 80	1	347	4240	-15.46	0.81	0
241	SLU 81	1	358	4442	-15.96	0.85	0
241	SLU 82	1	358	4439	-15.96	0.85	0
241	SLU 83	1	360	4439	-16.05	0.85	0
241	SLU 84	1	360	4436	-16.05	0.85	0
241	SLE RA 1	0	228	2821	-10.16	0.5	0
241	SLE RA 2	0	228	2818	-10.17	0.5	0
241	SLE RA 3	0	231	2850	-10.31	0.51	0
241	SLE RA 4	0	231	2848	-10.31	0.51	0
241	SLE RA 5	0	230	2816	-10.23	0.5	0
241	SLE RA 6	0	232	2848	-10.37	0.51	0
241	SLE RA 7	0	233	2846	-10.37	0.51	0
241	SLE RA 8	0	231	2817	-10.28	0.5	0
241	SLE RA 9	0	231	2815	-10.29	0.5	0
241	SLE RA 10	1	252	3118	-11.24	0.58	0
241	SLE RA 11	1	255	3149	-11.37	0.59	0
241	SLE RA 12	1	255	3148	-11.38	0.59	0
241	SLE RA 13	1	254	3116	-11.3	0.58	0
241	SLE RA 14	1	257	3147	-11.43	0.59	0
241	SLE RA 15	1	257	3146	-11.44	0.59	0
241	SLE RA 16	1	255	3117	-11.35	0.58	0
241	SLE RA 17	1	255	3115	-11.36	0.58	0
241	SLE RA 18	1	262	3250	-11.69	0.61	0
241	SLE RA 19	1	262	3248	-11.69	0.61	0
241	SLE RA 20	1	264	3247	-11.75	0.61	0
241	SLE RA 21	1	264	3246	-11.75	0.61	0
241	SLE FR 1	0	228	2821	-10.16	0.5	0
241	SLE FR 2	0	228	2821	-10.16	0.5	0
241	SLE FR 3	0	228	2820	-10.19	0.5	0
241	SLE FR 4	1	238	2949	-10.62	0.53	0
241	SLE FR 5	1	239	2949	-10.64	0.53	0
241	SLE FR 6	1	245	3035	-10.93	0.55	0
241	SLE QP 1	0	228	2821	-10.16	0.5	0
241	SLE QP 2	0	238	2950	-10.62	0.53	0
241	SLD 1	0	274	2465	-13.26	0.43	0
241	SLD 2	0	274	2465	-13.26	0.43	0
241	SLD 3	2	-38	1421	2.88	2.02	-0.02
241	SLD 4	2	-38	1421	2.88	2.02	-0.02
241	SLD 5	-3	724	4389	-35.88	-1.91	0.03
241	SLD 6	-3	724	4389	-35.88	-1.91	0.03
241	SLD 7	5	-319	907	17.9	3.38	-0.03
241	SLD 8	5	-319	907	17.9	3.38	-0.03
241	SLD 9	-4	796	4993	-39.14	-2.32	0.04
241	SLD 10	-4	796	4993	-39.14	-2.32	0.04
241	SLD 11	4	-247	1511	14.64	2.97	-0.03
241	SLD 12	4	-247	1511	14.64	2.97	-0.03
241	SLD 13	-1	515	4479	-24.12	-0.95	0.02
241	SLD 14	-1	515	4479	-24.12	-0.95	0.02
241	SLD 15	1	202	3434	-7.98	0.63	0
241	SLD 16	1	202	3434	-7.98	0.63	0
241	SLV 1	-1	317	1791	-16.48	0.11	0
241	SLV 2	-1	317	1791	-16.48	0.11	0
241	SLV 3	5	-425	-699	21.76	4.12	-0.05
241	SLV 4	5	-425	-699	21.76	4.12	-0.05
241	SLV 5	-9	1387	6379	-70.37	-5.69	0.07
241	SLV 6	-9	1387	6379	-70.37	-5.69	0.07
241	SLV 7	11	-1086	-1922	57.08	7.7	-0.09
241	SLV 8	11	-1086	-1922	57.08	7.7	-0.09
241	SLV 9	-10	1562	7822	-78.33	-6.64	0.09
241	SLV 10	-10	1562	7822	-78.33	-6.64	0.09
241	SLV 11	10	-910	-480	49.13	6.75	-0.07
241	SLV 12	10	-910	-480	49.13	6.75	-0.07
241	SLV 13	-4	901	6599	-43	-3.06	0.05
241	SLV 14	-4	901	6599	-43	-3.06	0.05
241	SLV 15	2	160	4108	-4.76	0.96	0
241	SLV 16	2	160	4108	-4.76	0.96	0
242	SLU 1	1	176	2658	-0.43	0.08	-0.01
242	SLU 2	1	176	2655	-0.41	0.08	-0.01
242	SLU 3	1	179	2694	-0.36	0.07	-0.01
242	SLU 4	1	179	2692	-0.35	0.07	-0.01
242	SLU 5	1	177	2645	-0.38	0.07	-0.01
242	SLU 6	1	181	2683	-0.33	0.06	-0.01
242	SLU 7	1	180	2681	-0.32	0.06	-0.01
242	SLU 8	1	179	2637	-0.36	0.06	-0.01

Nodo	Cont.	Reazione a traslazione			Reazione a rotazione		
Ind.	N.br.	x	y	z	x	y	z
242	SLU 9	1	179	2635	-0.35	0.06	-0.01
242	SLU 10	1	204	3082	-0.47	0.08	-0.01
242	SLU 11	1	207	3120	-0.42	0.07	-0.01
242	SLU 12	1	207	3119	-0.41	0.07	-0.01
242	SLU 13	1	205	3071	-0.43	0.07	-0.01
242	SLU 14	1	209	3110	-0.38	0.06	-0.01
242	SLU 15	1	208	3108	-0.37	0.06	-0.01
242	SLU 16	1	207	3064	-0.41	0.06	-0.01
242	SLU 17	1	207	3062	-0.4	0.06	-0.01
242	SLU 18	1	216	3268	-0.51	0.08	-0.01
242	SLU 19	1	216	3266	-0.5	0.08	-0.01
242	SLU 20	1	217	3257	-0.47	0.07	-0.01
242	SLU 21	1	217	3255	-0.46	0.07	-0.01
242	SLU 22	1	202	3108	-0.41	0.09	-0.01
242	SLU 23	1	202	3104	-0.39	0.09	-0.01
242	SLU 24	1	206	3143	-0.34	0.08	-0.01
242	SLU 25	1	205	3141	-0.33	0.08	-0.01
242	SLU 26	1	204	3094	-0.36	0.08	-0.01
242	SLU 27	1	207	3133	-0.31	0.07	-0.01
242	SLU 28	1	207	3131	-0.3	0.07	-0.01
242	SLU 29	1	205	3087	-0.34	0.07	-0.01
242	SLU 30	1	205	3085	-0.33	0.07	-0.01
242	SLU 31	1	230	3531	-0.45	0.09	-0.01
242	SLU 32	1	234	3570	-0.4	0.08	-0.01
242	SLU 33	1	233	3568	-0.39	0.08	-0.01
242	SLU 34	1	232	3521	-0.41	0.08	-0.01
242	SLU 35	1	235	3559	-0.36	0.07	-0.01
242	SLU 36	1	235	3558	-0.35	0.07	-0.01
242	SLU 37	1	233	3514	-0.39	0.07	-0.01
242	SLU 38	1	233	3512	-0.38	0.07	-0.01
242	SLU 39	2	242	3717	-0.49	0.09	-0.01
242	SLU 40	2	242	3715	-0.48	0.09	-0.01
242	SLU 41	1	244	3707	-0.45	0.08	-0.01
242	SLU 42	1	244	3705	-0.44	0.08	-0.01
242	SLU 43	1	220	3301	-0.56	0.1	-0.01
242	SLU 44	1	219	3298	-0.55	0.1	-0.01
242	SLU 45	1	223	3337	-0.5	0.1	-0.01
242	SLU 46	1	223	3335	-0.49	0.09	-0.01
242	SLU 47	1	221	3288	-0.51	0.09	-0.01
242	SLU 48	1	224	3327	-0.46	0.09	-0.01
242	SLU 49	1	224	3325	-0.45	0.09	-0.01
242	SLU 50	1	222	3281	-0.49	0.08	-0.01
242	SLU 51	1	222	3279	-0.48	0.08	-0.01
242	SLU 52	1	247	3725	-0.6	0.1	-0.01
242	SLU 53	1	251	3764	-0.55	0.09	-0.01
242	SLU 54	1	251	3762	-0.54	0.09	-0.01
242	SLU 55	1	249	3715	-0.57	0.09	-0.01
242	SLU 56	1	252	3753	-0.52	0.09	-0.01
242	SLU 57	1	252	3751	-0.51	0.09	-0.01
242	SLU 58	1	250	3707	-0.55	0.08	-0.01
242	SLU 59	1	250	3705	-0.54	0.08	-0.01
242	SLU 60	2	260	3911	-0.64	0.1	-0.01
242	SLU 61	2	259	3909	-0.63	0.1	-0.01
242	SLU 62	2	261	3901	-0.61	0.09	-0.01
242	SLU 63	2	261	3899	-0.6	0.09	-0.01
242	SLU 64	1	246	3751	-0.55	0.11	-0.01
242	SLU 65	1	246	3748	-0.53	0.11	-0.01
242	SLU 66	1	249	3786	-0.48	0.1	-0.01
242	SLU 67	1	249	3785	-0.47	0.1	-0.01
242	SLU 68	1	247	3737	-0.49	0.1	-0.01
242	SLU 69	1	251	3776	-0.44	0.09	-0.01
242	SLU 70	1	251	3774	-0.43	0.09	-0.01
242	SLU 71	1	249	3730	-0.47	0.09	-0.01
242	SLU 72	1	249	3728	-0.46	0.09	-0.01
242	SLU 73	2	274	4175	-0.58	0.11	-0.01
242	SLU 74	2	277	4213	-0.53	0.1	-0.01
242	SLU 75	2	277	4211	-0.52	0.1	-0.01
242	SLU 76	2	275	4164	-0.55	0.1	-0.01
242	SLU 77	2	279	4203	-0.5	0.09	-0.01
242	SLU 78	2	279	4201	-0.49	0.09	-0.01
242	SLU 79	2	277	4157	-0.53	0.09	-0.01
242	SLU 80	2	277	4155	-0.52	0.09	-0.01
242	SLU 81	2	286	4361	-0.63	0.11	-0.01
242	SLU 82	2	286	4359	-0.62	0.11	-0.01
242	SLU 83	2	288	4350	-0.59	0.1	-0.01
242	SLU 84	2	287	4348	-0.58	0.1	-0.01
242	SLE RA 1	1	183	2787	-0.42	0.08	-0.01
242	SLE RA 2	1	183	2784	-0.41	0.08	-0.01
242	SLE RA 3	1	186	2810	-0.38	0.08	-0.01
242	SLE RA 4	1	185	2809	-0.37	0.08	-0.01
242	SLE RA 5	1	184	2777	-0.39	0.08	-0.01
242	SLE RA 6	1	187	2803	-0.36	0.07	-0.01
242	SLE RA 7	1	186	2802	-0.35	0.07	-0.01
242	SLE RA 8	1	185	2773	-0.38	0.07	-0.01
242	SLE RA 9	1	185	2771	-0.37	0.07	-0.01
242	SLE RA 10	1	202	3069	-0.45	0.08	-0.01
242	SLE RA 11	1	204	3095	-0.42	0.08	-0.01
242	SLE RA 12	1	204	3093	-0.41	0.08	-0.01
242	SLE RA 13	1	203	3062	-0.43	0.08	-0.01
242	SLE RA 14	1	205	3088	-0.39	0.07	-0.01
242	SLE RA 15	1	205	3087	-0.39	0.07	-0.01

Nodo	Cont.	Reazione a traslazione			Reazione a rotazione		
Ind.	N.br.	x	y	z	x	y	z
242	SLE RA 16	1	204	3057	-0.41	0.07	-0.01
242	SLE RA 17	1	204	3056	-0.41	0.07	-0.01
242	SLE RA 18	1	210	3193	-0.48	0.08	-0.01
242	SLE RA 19	1	210	3192	-0.47	0.08	-0.01
242	SLE RA 20	1	211	3186	-0.45	0.08	-0.01
242	SLE RA 21	1	211	3185	-0.45	0.08	-0.01
242	SLE FR 1	1	183	2787	-0.42	0.08	-0.01
242	SLE FR 2	1	183	2786	-0.42	0.08	-0.01
242	SLE FR 3	1	184	2784	-0.41	0.08	-0.01
242	SLE FR 4	1	191	2908	-0.44	0.08	-0.01
242	SLE FR 5	1	192	2906	-0.43	0.08	-0.01
242	SLE FR 6	1	197	2990	-0.45	0.08	-0.01
242	SLE QP 1	1	183	2787	-0.42	0.08	-0.01
242	SLE QP 2	1	191	2908	-0.44	0.08	-0.01
242	SLD 1	3	424	4678	-10.45	1.6	-0.01
242	SLD 2	3	424	4678	-10.45	1.6	-0.01
242	SLD 3	2	192	3615	0.7	-0.31	-0.01
242	SLD 4	2	192	3615	0.7	-0.31	-0.01
242	SLD 5	4	614	5051	-20.36	3.45	-0.02
242	SLD 6	4	614	5051	-20.36	3.45	-0.02
242	SLD 7	-1	-162	1509	16.82	-2.94	0
242	SLD 8	-1	-162	1509	16.82	-2.94	0
242	SLD 9	3	544	4308	-17.7	3.11	-0.01
242	SLD 10	3	544	4308	-17.7	3.11	-0.01
242	SLD 11	-2	-231	766	19.48	-3.28	0
242	SLD 12	-2	-231	766	19.48	-3.28	0
242	SLD 13	0	191	2202	-1.58	0.48	0
242	SLD 14	0	191	2202	-1.58	0.48	0
242	SLD 15	-1	-41	1139	9.57	-1.44	0
242	SLD 16	-1	-41	1139	9.57	-1.44	0
242	SLV 1	7	748	7122	-24.38	3.77	-0.03
242	SLV 2	7	748	7122	-24.38	3.77	-0.03
242	SLV 3	3	194	4590	2.18	-0.97	-0.01
242	SLV 4	3	194	4590	2.18	-0.97	-0.01
242	SLV 5	8	1200	8013	-47.91	8.39	-0.03
242	SLV 6	8	1200	8013	-47.91	8.39	-0.03
242	SLV 7	-3	-649	-428	40.63	-7.43	0.01
242	SLV 8	-3	-649	-428	40.63	-7.43	0.01
242	SLV 9	6	1032	6245	-41.51	7.6	-0.02
242	SLV 10	6	1032	6245	-41.51	7.6	-0.02
242	SLV 11	-6	-817	-2196	47.03	-8.22	0.02
242	SLV 12	-6	-817	-2196	47.03	-8.22	0.02
242	SLV 13	-1	189	1227	-3.06	1.14	0
242	SLV 14	-1	189	1227	-3.06	1.14	0
242	SLV 15	-4	-366	-1305	23.5	-3.61	0.01
242	SLV 16	-4	-366	-1305	23.5	-3.61	0.01
243	SLU 1	15	-5	1669	1.14	11.09	0
243	SLU 2	15	-9	1642	1.37	10.85	0
243	SLU 3	16	-7	1709	1.24	11.48	0
243	SLU 4	15	-9	1693	1.38	11.34	0
243	SLU 5	15	-10	1668	1.42	11.1	0
243	SLU 6	16	-8	1735	1.3	11.73	0
243	SLU 7	16	-11	1719	1.44	11.59	0
243	SLU 8	16	-7	1722	1.25	11.58	0
243	SLU 9	16	-10	1706	1.39	11.44	0
243	SLU 10	17	-20	1806	2.08	12.53	0
243	SLU 11	18	-18	1873	1.95	13.16	0
243	SLU 12	18	-20	1856	2.09	13.02	0
243	SLU 13	17	-21	1832	2.13	12.78	0
243	SLU 14	18	-19	1899	2.01	13.41	0
243	SLU 15	18	-22	1883	2.15	13.27	0
243	SLU 16	18	-18	1886	1.96	13.26	0
243	SLU 17	18	-21	1869	2.1	13.12	0
243	SLU 18	18	-21	1903	2.15	13.49	0
243	SLU 19	18	-23	1887	2.29	13.34	0
243	SLU 20	19	-22	1929	2.21	13.73	0
243	SLU 21	18	-24	1913	2.35	13.59	0
243	SLU 22	17	-14	1839	1.72	12.8	0
243	SLU 23	17	-18	1812	1.95	12.56	0
243	SLU 24	18	-16	1879	1.83	13.19	0
243	SLU 25	18	-19	1862	1.96	13.05	0
243	SLU 26	17	-20	1838	2.01	12.81	0
243	SLU 27	18	-17	1905	1.89	13.44	0
243	SLU 28	18	-20	1889	2.02	13.3	0
243	SLU 29	18	-16	1891	1.84	13.29	0
243	SLU 30	18	-19	1875	1.98	13.15	0
243	SLU 31	19	-29	1975	2.66	14.24	0
243	SLU 32	20	-27	2042	2.54	14.87	0
243	SLU 33	20	-30	2026	2.67	14.73	0
243	SLU 34	20	-31	2002	2.72	14.49	0
243	SLU 35	21	-28	2069	2.59	15.12	0
243	SLU 36	20	-31	2052	2.73	14.98	0
243	SLU 37	20	-27	2055	2.55	14.97	0
243	SLU 38	20	-30	2039	2.69	14.83	0
243	SLU 39	21	-30	2073	2.73	15.2	0
243	SLU 40	20	-32	2056	2.87	15.06	0
243	SLU 41	21	-31	2099	2.79	15.44	0
243	SLU 42	21	-34	2083	2.93	15.3	0
243	SLU 43	19	-3	2112	1.28	13.83	0
243	SLU 44	19	-7	2085	1.51	13.59	0
243	SLU 45	19	-5	2151	1.38	14.22	0

Nodo	Cont.	Reazione a traslazione			Reazione a rotazione		
Ind.	N.br.	x	y	z	x	y	z
243	SLU 46	19	-8	2135	1.52	14.08	0
243	SLU 47	19	-9	2111	1.56	13.84	0
243	SLU 48	20	-6	2178	1.44	14.47	0
243	SLU 49	20	-9	2162	1.58	14.33	0
243	SLU 50	19	-6	2164	1.39	14.32	0
243	SLU 51	19	-8	2148	1.53	14.18	0
243	SLU 52	21	-18	2248	2.22	15.27	0
243	SLU 53	22	-16	2315	2.09	15.9	0
243	SLU 54	21	-19	2299	2.23	15.76	0
243	SLU 55	21	-20	2275	2.27	15.52	0
243	SLU 56	22	-17	2342	2.15	16.15	0
243	SLU 57	22	-20	2325	2.29	16.01	0
243	SLU 58	22	-17	2328	2.1	16	0
243	SLU 59	22	-19	2312	2.24	15.86	0
243	SLU 60	22	-19	2346	2.29	16.23	0
243	SLU 61	22	-21	2329	2.43	16.09	0
243	SLU 62	22	-20	2372	2.35	16.47	0
243	SLU 63	22	-23	2356	2.49	16.33	0
243	SLU 64	21	-12	2281	1.86	15.54	0
243	SLU 65	21	-17	2254	2.09	15.3	0
243	SLU 66	22	-14	2321	1.97	15.94	0
243	SLU 67	21	-17	2305	2.1	15.79	0
243	SLU 68	21	-18	2281	2.15	15.55	0
243	SLU 69	22	-15	2348	2.03	16.18	0
243	SLU 70	22	-18	2331	2.16	16.04	0
243	SLU 71	22	-15	2334	1.98	16.03	0
243	SLU 72	22	-17	2318	2.12	15.89	0
243	SLU 73	23	-28	2418	2.8	16.98	0
243	SLU 74	24	-25	2485	2.68	17.61	0
243	SLU 75	24	-28	2469	2.81	17.47	0
243	SLU 76	23	-29	2444	2.86	17.23	0
243	SLU 77	24	-27	2511	2.73	17.86	0
243	SLU 78	24	-29	2495	2.87	17.72	0
243	SLU 79	24	-26	2498	2.69	17.71	0
243	SLU 80	24	-28	2482	2.83	17.57	0
243	SLU 81	24	-28	2515	2.87	17.94	0
243	SLU 82	24	-31	2499	3.01	17.8	0
243	SLU 83	25	-29	2542	2.93	18.18	0
243	SLU 84	25	-32	2525	3.07	18.04	0
243	SLE RA 1	16	-7	1718	1.3	11.58	0
243	SLE RA 2	16	-10	1699	1.46	11.42	0
243	SLE RA 3	16	-9	1744	1.37	11.84	0
243	SLE RA 4	16	-10	1733	1.47	11.75	0
243	SLE RA 5	16	-11	1717	1.5	11.58	0
243	SLE RA 6	16	-10	1762	1.41	12.01	0
243	SLE RA 7	16	-11	1751	1.5	11.91	0
243	SLE RA 8	16	-9	1753	1.38	11.91	0
243	SLE RA 9	16	-11	1742	1.47	11.81	0
243	SLE RA 10	17	-18	1809	1.93	12.54	0
243	SLE RA 11	18	-16	1853	1.85	12.96	0
243	SLE RA 12	18	-18	1842	1.94	12.87	0
243	SLE RA 13	17	-18	1826	1.97	12.7	0
243	SLE RA 14	18	-17	1871	1.89	13.12	0
243	SLE RA 15	18	-19	1860	1.98	13.03	0
243	SLE RA 16	18	-16	1862	1.85	13.02	0
243	SLE RA 17	18	-18	1851	1.95	12.93	0
243	SLE RA 18	18	-18	1873	1.98	13.18	0
243	SLE RA 19	18	-20	1863	2.07	13.08	0
243	SLE RA 20	18	-19	1891	2.02	13.34	0
243	SLE RA 21	18	-20	1880	2.11	13.25	0
243	SLE FR 1	16	-7	1718	1.3	11.58	0
243	SLE FR 2	16	-8	1714	1.33	11.55	0
243	SLE FR 3	16	-8	1725	1.32	11.64	0
243	SLE FR 4	16	-11	1761	1.54	12.03	0
243	SLE FR 5	16	-11	1771	1.52	12.12	0
243	SLE FR 6	17	-13	1795	1.64	12.38	0
243	SLE QP 1	16	-7	1718	1.3	11.58	0
243	SLE QP 2	16	-11	1764	1.5	12.06	0
243	SLD 1	12	-17	1668	1.78	19.77	0.01
243	SLD 2	12	-17	1668	1.78	19.77	0.01
243	SLD 3	8	-374	991	19.71	15.98	0.01
243	SLD 4	8	-374	991	19.71	15.98	0.01
243	SLD 5	21	529	2762	-25.61	20.12	0
243	SLD 6	21	529	2762	-25.61	20.12	0
243	SLD 7	8	-661	506	34.16	7.49	0.01
243	SLD 8	8	-661	506	34.16	7.49	0.01
243	SLD 9	25	640	3023	-31.15	16.63	0
243	SLD 10	25	640	3023	-31.15	16.63	0
243	SLD 11	12	-550	767	28.62	4	0
243	SLD 12	12	-550	767	28.62	4	0
243	SLD 13	25	352	2538	-16.7	8.14	0
243	SLD 14	25	352	2538	-16.7	8.14	0
243	SLD 15	21	-4	1861	1.23	4.35	0
243	SLD 16	21	-4	1861	1.23	4.35	0
243	SLV 1	6	-24	1537	2.1	30.46	0.01
243	SLV 2	6	-24	1537	2.1	30.46	0.01
243	SLV 3	-3	-866	-62	44.38	21.06	0.01
243	SLV 4	-3	-866	-62	44.38	21.06	0.01
243	SLV 5	27	1262	4121	-62.44	31.83	0
243	SLV 6	27	1262	4121	-62.44	31.83	0
243	SLV 7	-4	-1544	-1209	78.49	0.5	0.01

Nodo	Cont.	Reazione a traslazione			Reazione a rotazione		
Ind.	N.br.	x	y	z	x	y	z
243	SLV 8	-4	-1544	-1209	78.49	0.5	0.01
243	SLV 9	36	1523	4737	-75.48	23.61	-0.01
243	SLV 10	36	1523	4737	-75.48	23.61	-0.01
243	SLV 11	5	-1283	-593	65.45	-7.72	0.01
243	SLV 12	5	-1283	-593	65.45	-7.72	0.01
243	SLV 13	36	845	3591	-41.37	3.06	-0.01
243	SLV 14	36	845	3591	-41.37	3.06	-0.01
243	SLV 15	27	3	1992	0.91	-6.34	0
243	SLV 16	27	3	1992	0.91	-6.34	0
244	SLU 1	9	-316	4781	13.23	7.31	0
244	SLU 2	11	-219	4691	9.13	8.93	0
244	SLU 3	10	-325	4945	13.63	7.6	0
244	SLU 4	11	-267	4891	11.17	8.57	0
244	SLU 5	11	-223	4813	9.3	9.14	0
244	SLU 6	10	-329	5067	13.8	7.81	0
244	SLU 7	11	-271	5013	11.34	8.78	0
244	SLU 8	10	-323	5024	13.58	7.73	0
244	SLU 9	11	-265	4970	11.12	8.71	0
244	SLU 10	12	-266	5215	11.06	9.89	-0.01
244	SLU 11	11	-372	5470	15.57	8.55	-0.01
244	SLU 12	12	-314	5415	13.11	9.53	-0.01
244	SLU 13	12	-269	5337	11.24	10.1	-0.01
244	SLU 14	11	-375	5591	15.74	8.77	-0.01
244	SLU 15	12	-317	5537	13.28	9.74	-0.01
244	SLU 16	11	-370	5548	15.52	8.69	-0.01
244	SLU 17	12	-312	5494	13.05	9.67	-0.01
244	SLU 18	11	-383	5530	16	8.67	-0.01
244	SLU 19	12	-325	5476	13.54	9.65	-0.01
244	SLU 20	11	-386	5651	16.17	8.89	-0.01
244	SLU 21	12	-328	5597	13.71	9.86	-0.01
244	SLU 22	11	-361	5307	15.11	8.25	0
244	SLU 23	12	-264	5217	11	9.88	-0.01
244	SLU 24	11	-370	5471	15.51	8.54	-0.01
244	SLU 25	12	-312	5417	13.04	9.52	-0.01
244	SLU 26	12	-268	5339	11.18	10.09	-0.01
244	SLU 27	11	-374	5593	15.68	8.76	-0.01
244	SLU 28	12	-316	5539	13.22	9.73	-0.01
244	SLU 29	11	-368	5550	15.45	8.68	-0.01
244	SLU 30	12	-310	5496	12.99	9.65	-0.01
244	SLU 31	13	-311	5741	12.94	10.83	-0.01
244	SLU 32	12	-417	5995	17.44	9.5	-0.01
244	SLU 33	13	-359	5941	14.98	10.47	-0.01
244	SLU 34	14	-314	5863	13.11	11.05	-0.01
244	SLU 35	13	-420	6117	17.62	9.71	-0.01
244	SLU 36	13	-362	6063	15.16	10.69	-0.01
244	SLU 37	12	-415	6074	17.39	9.64	-0.01
244	SLU 38	13	-357	6020	14.93	10.61	-0.01
244	SLU 39	12	-428	6056	17.87	9.62	-0.01
244	SLU 40	13	-370	6002	15.41	10.59	-0.01
244	SLU 41	13	-431	6177	18.05	9.83	-0.01
244	SLU 42	14	-373	6123	15.59	10.81	-0.01
244	SLU 43	12	-396	6035	16.56	9.17	-0.01
244	SLU 44	13	-299	5945	12.45	10.8	-0.01
244	SLU 45	12	-405	6199	16.96	9.46	-0.01
244	SLU 46	13	-346	6145	14.49	10.44	-0.01
244	SLU 47	14	-302	6067	12.63	11.01	-0.01
244	SLU 48	13	-408	6321	17.13	9.68	-0.01
244	SLU 49	13	-350	6267	14.67	10.65	-0.01
244	SLU 50	12	-403	6278	16.9	9.6	-0.01
244	SLU 51	13	-344	6224	14.44	10.58	-0.01
244	SLU 52	15	-345	6469	14.39	11.75	-0.01
244	SLU 53	13	-451	6724	18.89	10.42	-0.01
244	SLU 54	14	-393	6670	16.43	11.4	-0.01
244	SLU 55	15	-349	6591	14.56	11.97	-0.01
244	SLU 56	14	-455	6845	19.07	10.63	-0.01
244	SLU 57	15	-397	6791	16.61	11.61	-0.01
244	SLU 58	14	-449	6802	18.84	10.56	-0.01
244	SLU 59	14	-391	6748	16.38	11.53	-0.01
244	SLU 60	14	-462	6784	19.32	10.54	-0.01
244	SLU 61	14	-404	6730	16.86	11.52	-0.01
244	SLU 62	14	-466	6905	19.5	10.75	-0.01
244	SLU 63	15	-408	6851	17.04	11.73	-0.01
244	SLU 64	13	-440	6561	18.43	10.12	-0.01
244	SLU 65	15	-344	6471	14.33	11.74	-0.01
244	SLU 66	13	-450	6725	18.83	10.41	-0.01
244	SLU 67	14	-391	6671	16.37	11.38	-0.01
244	SLU 68	15	-347	6593	14.5	11.96	-0.01
244	SLU 69	14	-453	6847	19.01	10.62	-0.01
244	SLU 70	15	-395	6793	16.54	11.6	-0.01
244	SLU 71	14	-448	6804	18.78	10.55	-0.01
244	SLU 72	14	-389	6750	16.32	11.52	-0.01
244	SLU 73	16	-390	6995	16.27	12.7	-0.01
244	SLU 74	15	-496	7249	20.77	11.37	-0.01
244	SLU 75	16	-438	7195	18.31	12.34	-0.01
244	SLU 76	16	-394	7117	16.44	12.91	-0.01
244	SLU 77	15	-500	7371	20.94	11.58	-0.01
244	SLU 78	16	-442	7317	18.48	12.56	-0.01
244	SLU 79	15	-494	7328	20.72	11.5	-0.01
244	SLU 80	16	-436	7274	18.26	12.48	-0.01
244	SLU 81	15	-507	7310	21.2	11.49	-0.01
244	SLU 82	16	-449	7256	18.74	12.46	-0.01

Nodo	Cont.	Reazione a traslazione			Reazione a rotazione		
Ind.	N.br.	x	y	z	x	y	z
244	SLU 83	15	-511	7431	21.37	11.7	-0.01
244	SLU 84	16	-453	7377	18.91	12.68	-0.01
244	SLE RA 1	10	-329	4931	13.77	7.58	0
244	SLE RA 2	11	-264	4871	11.03	8.66	0
244	SLE RA 3	10	-335	5041	14.03	7.77	0
244	SLE RA 4	11	-296	5005	12.39	8.42	0
244	SLE RA 5	11	-267	4952	11.15	8.8	0
244	SLE RA 6	10	-337	5122	14.15	7.91	0
244	SLE RA 7	11	-299	5086	12.51	8.56	0
244	SLE RA 8	10	-334	5094	14	7.86	0
244	SLE RA 9	11	-295	5058	12.36	8.51	0
244	SLE RA 10	12	-295	5221	12.32	9.3	-0.01
244	SLE RA 11	11	-366	5390	15.32	8.41	-0.01
244	SLE RA 12	11	-327	5354	13.68	9.06	-0.01
244	SLE RA 13	12	-298	5302	12.44	9.44	-0.01
244	SLE RA 14	11	-369	5471	15.44	8.55	-0.01
244	SLE RA 15	12	-330	5435	13.8	9.2	-0.01
244	SLE RA 16	11	-365	5443	15.29	8.5	-0.01
244	SLE RA 17	12	-326	5407	13.65	9.15	-0.01
244	SLE RA 18	11	-373	5431	15.61	8.49	-0.01
244	SLE RA 19	12	-335	5395	13.97	9.14	-0.01
244	SLE RA 20	11	-376	5512	15.73	8.63	-0.01
244	SLE RA 21	12	-337	5476	14.09	9.28	-0.01
244	SLE FR 1	10	-329	4931	13.77	7.58	0
244	SLE FR 2	10	-316	4919	13.22	7.79	0
244	SLE FR 3	10	-330	4964	13.81	7.63	0
244	SLE FR 4	10	-329	5069	13.77	8.07	0
244	SLE FR 5	10	-343	5114	14.37	7.91	0
244	SLE FR 6	10	-351	5181	14.69	8.03	0
244	SLE QP 1	10	-329	4931	13.77	7.58	0
244	SLE QP 2	10	-342	5081	14.32	7.85	0
244	SLD 1	24	-182	6012	7.21	21.89	-0.02
244	SLD 2	24	-182	6012	7.21	21.89	-0.02
244	SLD 3	31	-732	6350	30.64	29.67	-0.02
244	SLD 4	31	-732	6350	30.64	29.67	-0.02
244	SLD 5	4	540	4849	-23.35	0.27	0
244	SLD 6	4	540	4849	-23.35	0.27	0
244	SLD 7	26	-1293	5973	54.76	26.19	-0.02
244	SLD 8	26	-1293	5973	54.76	26.19	-0.02
244	SLD 9	-6	609	4189	-26.12	-10.49	0.01
244	SLD 10	-6	609	4189	-26.12	-10.49	0.01
244	SLD 11	16	-1225	5313	51.99	15.43	-0.01
244	SLD 12	16	-1225	5313	51.99	15.43	-0.01
244	SLD 13	-11	47	3813	-2	-13.97	0.01
244	SLD 14	-11	47	3813	-2	-13.97	0.01
244	SLD 15	-4	-503	4150	21.43	-6.19	0.01
244	SLD 16	-4	-503	4150	21.43	-6.19	0.01
244	SLV 1	43	28	7216	-2.08	40.9	-0.04
244	SLV 2	43	28	7216	-2.08	40.9	-0.04
244	SLV 3	60	-1254	8012	52.52	60.35	-0.05
244	SLV 4	60	-1254	8012	52.52	60.35	-0.05
244	SLV 5	-5	1712	4514	-73.41	-11.74	0
244	SLV 6	-5	1712	4514	-73.41	-11.74	0
244	SLV 7	50	-2559	7168	108.59	53.1	-0.03
244	SLV 8	50	-2559	7168	108.59	53.1	-0.03
244	SLV 9	-30	1875	2994	-79.95	-37.4	0.02
244	SLV 10	-30	1875	2994	-79.95	-37.4	0.02
244	SLV 11	25	-2397	5648	102.05	27.44	-0.01
244	SLV 12	25	-2397	5648	102.05	27.44	-0.01
244	SLV 13	-39	569	2150	-23.88	-44.65	0.04
244	SLV 14	-39	569	2150	-23.88	-44.65	0.04
244	SLV 15	-23	-713	2946	30.72	-25.2	0.03
244	SLV 16	-23	-713	2946	30.72	-25.2	0.03
245	SLU 1	12	-521	5414	20.54	7.6	0
245	SLU 2	10	-415	5298	16.1	5.86	0
245	SLU 3	12	-540	5604	21.3	7.89	0
245	SLU 4	11	-476	5535	18.64	6.84	0
245	SLU 5	10	-427	5438	16.59	6.07	0
245	SLU 6	12	-552	5744	21.79	8.1	0
245	SLU 7	11	-488	5675	19.13	7.05	0
245	SLU 8	12	-545	5694	21.52	8.02	0
245	SLU 9	11	-481	5624	18.86	6.98	0
245	SLU 10	11	-500	5928	19.45	6.82	0
245	SLU 11	13	-625	6235	24.65	8.85	0
245	SLU 12	13	-562	6165	21.99	7.81	0
245	SLU 13	12	-512	6069	19.94	7.03	0
245	SLU 14	14	-637	6375	25.14	9.07	0
245	SLU 15	13	-574	6305	22.48	8.02	0
245	SLU 16	14	-630	6324	24.87	8.99	0
245	SLU 17	13	-567	6255	22.2	7.94	0
245	SLU 18	14	-643	6314	25.32	8.98	0
245	SLU 19	13	-579	6245	22.66	7.93	0
245	SLU 20	14	-655	6454	25.81	9.19	0
245	SLU 21	13	-591	6385	23.15	8.14	0
245	SLU 22	13	-601	6040	23.71	8.56	0
245	SLU 23	11	-495	5924	19.27	6.82	0
245	SLU 24	13	-621	6230	24.47	8.85	0
245	SLU 25	13	-557	6161	21.81	7.8	0
245	SLU 26	12	-507	6064	19.76	7.03	0
245	SLU 27	14	-633	6370	24.96	9.06	0
245	SLU 28	13	-569	6301	22.3	8.01	0

Nodo	Cont.	Reazione a traslazione			Reazione a rotazione		
Ind.	N.br.	x	y	z	x	y	z
245	SLU 29	14	-625	6320	24.69	8.98	0
245	SLU 30	13	-562	6250	22.02	7.94	0
245	SLU 31	13	-581	6555	22.61	7.78	0
245	SLU 32	15	-706	6861	27.82	9.81	0
245	SLU 33	14	-642	6791	25.15	8.77	0
245	SLU 34	13	-593	6695	23.1	7.99	0
245	SLU 35	15	-718	7001	28.31	10.02	0
245	SLU 36	14	-654	6931	25.64	8.98	0
245	SLU 37	15	-711	6950	28.03	9.95	0
245	SLU 38	14	-647	6881	25.37	8.9	0
245	SLU 39	15	-723	6940	28.49	9.94	0
245	SLU 40	14	-660	6871	25.82	8.89	0
245	SLU 41	15	-735	7080	28.98	10.15	0
245	SLU 42	15	-672	7011	26.31	9.1	0
245	SLU 43	14	-649	6823	25.62	9.56	0
245	SLU 44	13	-543	6708	21.18	7.81	0
245	SLU 45	15	-668	7014	26.38	9.84	0
245	SLU 46	14	-605	6944	23.72	8.79	0
245	SLU 47	13	-555	6848	21.67	8.02	0
245	SLU 48	15	-680	7154	26.87	10.05	0
245	SLU 49	14	-617	7084	24.21	9	0
245	SLU 50	15	-673	7103	26.6	9.98	0
245	SLU 51	14	-610	7034	23.93	8.93	0
245	SLU 52	14	-629	7338	24.52	8.77	0
245	SLU 53	16	-754	7644	29.73	10.81	0
245	SLU 54	15	-690	7575	27.06	9.76	0
245	SLU 55	15	-641	7478	25.01	8.99	0
245	SLU 56	17	-766	7784	30.22	11.02	0
245	SLU 57	16	-702	7715	27.55	9.97	0
245	SLU 58	17	-759	7733	29.94	10.94	0
245	SLU 59	16	-695	7664	27.28	9.89	0
245	SLU 60	17	-771	7724	30.4	10.94	0
245	SLU 61	16	-708	7654	27.73	9.89	0
245	SLU 62	17	-783	7864	30.89	11.15	0
245	SLU 63	16	-720	7794	28.22	10.1	0
245	SLU 64	16	-730	7449	28.78	10.52	0
245	SLU 65	14	-624	7334	24.34	8.77	0
245	SLU 66	16	-749	7640	29.55	10.8	0
245	SLU 67	15	-685	7570	26.88	9.75	0
245	SLU 68	15	-636	7474	24.83	8.98	0
245	SLU 69	17	-761	7780	30.04	11.01	0
245	SLU 70	16	-698	7710	27.37	9.96	0
245	SLU 71	17	-754	7729	29.76	10.94	0
245	SLU 72	16	-690	7660	27.1	9.89	0
245	SLU 73	16	-709	7964	27.69	9.73	0
245	SLU 74	18	-834	8270	32.89	11.77	0
245	SLU 75	17	-771	8201	30.23	10.72	0
245	SLU 76	16	-721	8104	28.18	9.94	0
245	SLU 77	18	-847	8410	33.38	11.98	0
245	SLU 78	17	-783	8341	30.72	10.93	0
245	SLU 79	18	-839	8359	33.11	11.9	0
245	SLU 80	17	-776	8290	30.45	10.85	0
245	SLU 81	18	-852	8350	33.57	11.89	0
245	SLU 82	17	-788	8280	30.9	10.85	0
245	SLU 83	18	-864	8490	34.05	12.1	0
245	SLU 84	17	-800	8420	31.39	11.06	0
245	SLE RA 1	12	-544	5592	21.45	7.88	0
245	SLE RA 2	11	-473	5515	18.49	6.71	0
245	SLE RA 3	12	-557	5720	21.95	8.07	0
245	SLE RA 4	12	-514	5673	20.18	7.37	0
245	SLE RA 5	11	-481	5609	18.81	6.85	0
245	SLE RA 6	12	-565	5813	22.28	8.21	0
245	SLE RA 7	12	-522	5767	20.5	7.51	0
245	SLE RA 8	12	-560	5779	22.1	8.16	0
245	SLE RA 9	12	-517	5733	20.32	7.46	0
245	SLE RA 10	12	-530	5936	20.72	7.36	0
245	SLE RA 11	13	-613	6140	24.19	8.71	0
245	SLE RA 12	13	-571	6094	22.41	8.01	0
245	SLE RA 13	12	-538	6029	21.04	7.5	0
245	SLE RA 14	13	-621	6233	24.51	8.85	0
245	SLE RA 15	13	-579	6187	22.74	8.15	0
245	SLE RA 16	13	-617	6199	24.33	8.8	0
245	SLE RA 17	13	-574	6153	22.55	8.1	0
245	SLE RA 18	13	-625	6193	24.63	8.8	0
245	SLE RA 19	13	-583	6147	22.86	8.1	0
245	SLE RA 20	14	-633	6286	24.96	8.94	0
245	SLE RA 21	13	-591	6240	23.18	8.24	0
245	SLE FR 1	12	-544	5592	21.45	7.88	0
245	SLE FR 2	12	-530	5577	20.85	7.65	0
245	SLE FR 3	12	-547	5630	21.58	7.93	0
245	SLE FR 4	12	-554	5757	21.81	7.92	0
245	SLE FR 5	12	-571	5810	22.53	8.21	0
245	SLE FR 6	13	-584	5893	23.04	8.34	0
245	SLE QP 1	12	-544	5592	21.45	7.88	0
245	SLE QP 2	12	-568	5773	22.4	8.15	0
245	SLD 1	-5	-72	4291	1.48	20.77	-0.01
245	SLD 2	-5	-72	4291	1.48	20.77	-0.01
245	SLD 3	1	-645	4515	26.04	26.77	-0.01
245	SLD 4	1	-645	4515	26.04	26.77	-0.01
245	SLD 5	-1	450	4990	-21.13	2.83	0
245	SLD 6	-1	450	4990	-21.13	2.83	0

Nodo	Cont.	Reazione a traslazione			Reazione a rotazione		
Ind.	N.br.	x	y	z	x	y	z
245	SLD 7	17	-1461	5734	60.75	22.84	-0.01
245	SLD 8	17	-1461	5734	60.75	22.84	-0.01
245	SLD 9	8	324	5811	-15.94	-6.53	0
245	SLD 10	8	324	5811	-15.94	-6.53	0
245	SLD 11	26	-1587	6556	65.93	13.47	0
245	SLD 12	26	-1587	6556	65.93	13.47	0
245	SLD 13	24	-491	7030	18.77	-10.46	0.01
245	SLD 14	24	-491	7030	18.77	-10.46	0.01
245	SLD 15	29	-1065	7254	43.33	-4.46	0
245	SLD 16	29	-1065	7254	43.33	-4.46	0
245	SLV 1	-28	581	2357	-26.04	37.85	-0.02
245	SLV 2	-28	581	2357	-26.04	37.85	-0.02
245	SLV 3	-15	-755	2887	31.22	52.92	-0.02
245	SLV 4	-15	-755	2887	31.22	52.92	-0.02
245	SLV 5	-20	1804	3944	-78.97	-5.8	0
245	SLV 6	-20	1804	3944	-78.97	-5.8	0
245	SLV 7	24	-2651	5711	111.88	44.44	-0.02
245	SLV 8	24	-2651	5711	111.88	44.44	-0.02
245	SLV 9	0	1515	5834	-67.08	-28.14	0.01
245	SLV 10	0	1515	5834	-67.08	-28.14	0.01
245	SLV 11	45	-2940	7601	123.77	22.11	-0.01
245	SLV 12	45	-2940	7601	123.77	22.11	-0.01
245	SLV 13	40	-381	8658	13.59	-36.61	0.02
245	SLV 14	40	-381	8658	13.59	-36.61	0.02
245	SLV 15	53	-1718	9188	70.84	-21.54	0.01
245	SLV 16	53	-1718	9188	70.84	-21.54	0.01
246	SLU 1	11	133	2700	-4.51	8.11	-0.26
246	SLU 2	10	124	2635	-4.11	8.02	-0.25
246	SLU 3	11	131	2768	-4.42	8.36	-0.27
246	SLU 4	11	126	2730	-4.18	8.31	-0.26
246	SLU 5	11	120	2675	-3.95	8.17	-0.26
246	SLU 6	11	127	2808	-4.25	8.51	-0.27
246	SLU 7	11	122	2769	-4.01	8.46	-0.27
246	SLU 8	11	125	2779	-4.18	8.41	-0.27
246	SLU 9	11	120	2740	-3.94	8.36	-0.27
246	SLU 10	12	136	2959	-4.47	9.2	-0.29
246	SLU 11	12	143	3092	-4.78	9.55	-0.3
246	SLU 12	12	138	3054	-4.54	9.49	-0.3
246	SLU 13	12	132	2999	-4.31	9.36	-0.3
246	SLU 14	13	139	3132	-4.61	9.7	-0.31
246	SLU 15	13	134	3093	-4.37	9.64	-0.31
246	SLU 16	13	137	3103	-4.54	9.59	-0.31
246	SLU 17	12	132	3064	-4.3	9.54	-0.3
246	SLU 18	13	150	3162	-5.02	9.8	-0.31
246	SLU 19	13	145	3124	-4.79	9.75	-0.31
246	SLU 20	13	146	3202	-4.86	9.95	-0.32
246	SLU 21	13	141	3163	-4.62	9.9	-0.32
246	SLU 22	12	144	3023	-4.85	9.28	-0.3
246	SLU 23	12	135	2959	-4.46	9.19	-0.29
246	SLU 24	12	142	3092	-4.76	9.53	-0.31
246	SLU 25	12	137	3053	-4.53	9.48	-0.3
246	SLU 26	12	132	2998	-4.29	9.34	-0.3
246	SLU 27	13	139	3132	-4.6	9.68	-0.31
246	SLU 28	13	133	3093	-4.36	9.63	-0.31
246	SLU 29	12	137	3102	-4.52	9.58	-0.31
246	SLU 30	12	131	3064	-4.29	9.53	-0.31
246	SLU 31	13	147	3283	-4.82	10.37	-0.33
246	SLU 32	14	154	3416	-5.13	10.71	-0.34
246	SLU 33	14	149	3377	-4.89	10.66	-0.34
246	SLU 34	14	144	3322	-4.65	10.52	-0.34
246	SLU 35	14	151	3456	-4.96	10.86	-0.35
246	SLU 36	14	146	3417	-4.72	10.81	-0.35
246	SLU 37	14	149	3426	-4.89	10.76	-0.35
246	SLU 38	14	144	3388	-4.65	10.71	-0.34
246	SLU 39	14	161	3486	-5.37	10.97	-0.35
246	SLU 40	14	156	3447	-5.13	10.91	-0.35
246	SLU 41	14	158	3526	-5.21	11.12	-0.36
246	SLU 42	14	152	3487	-4.97	11.07	-0.35
246	SLU 43	13	169	3398	-5.74	10.14	-0.32
246	SLU 44	13	160	3334	-5.34	10.05	-0.32
246	SLU 45	14	167	3467	-5.65	10.39	-0.33
246	SLU 46	13	162	3429	-5.41	10.34	-0.33
246	SLU 47	13	156	3374	-5.18	10.2	-0.32
246	SLU 48	14	163	3507	-5.48	10.55	-0.34
246	SLU 49	14	158	3468	-5.25	10.49	-0.33
246	SLU 50	14	161	3478	-5.41	10.44	-0.33
246	SLU 51	14	156	3439	-5.17	10.39	-0.33
246	SLU 52	15	172	3658	-5.71	11.24	-0.36
246	SLU 53	15	179	3791	-6.01	11.58	-0.37
246	SLU 54	15	174	3753	-5.77	11.53	-0.37
246	SLU 55	15	168	3698	-5.54	11.39	-0.36
246	SLU 56	15	175	3831	-5.85	11.73	-0.37
246	SLU 57	15	170	3792	-5.61	11.68	-0.37
246	SLU 58	15	173	3801	-5.77	11.63	-0.37
246	SLU 59	15	168	3763	-5.53	11.57	-0.37
246	SLU 60	15	186	3861	-6.26	11.83	-0.38
246	SLU 61	15	181	3822	-6.02	11.78	-0.37
246	SLU 62	16	182	3901	-6.09	11.98	-0.38
246	SLU 63	16	177	3862	-5.85	11.93	-0.38
246	SLU 64	15	180	3722	-6.09	11.31	-0.36
246	SLU 65	15	171	3658	-5.69	11.22	-0.36

Nodo	Cont.	Reazione a traslazione			Reazione a rotazione		
Ind.	N.br.	x	y	z	x	y	z
246	SLU 66	15	178	3791	-6	11.56	-0.37
246	SLU 67	15	173	3752	-5.76	11.51	-0.37
246	SLU 68	15	167	3697	-5.53	11.37	-0.36
246	SLU 69	15	175	3831	-5.83	11.71	-0.37
246	SLU 70	15	169	3792	-5.59	11.66	-0.37
246	SLU 71	15	173	3801	-5.76	11.61	-0.37
246	SLU 72	15	167	3763	-5.52	11.56	-0.37
246	SLU 73	16	183	3982	-6.05	12.4	-0.4
246	SLU 74	17	190	4115	-6.36	12.75	-0.41
246	SLU 75	17	185	4076	-6.12	12.69	-0.41
246	SLU 76	16	180	4021	-5.89	12.56	-0.4
246	SLU 77	17	187	4154	-6.19	12.9	-0.41
246	SLU 78	17	181	4116	-5.95	12.84	-0.41
246	SLU 79	17	185	4125	-6.12	12.79	-0.41
246	SLU 80	17	179	4087	-5.88	12.74	-0.41
246	SLU 81	17	197	4185	-6.6	13	-0.41
246	SLU 82	17	192	4146	-6.37	12.95	-0.41
246	SLU 83	17	194	4224	-6.44	13.15	-0.42
246	SLU 84	17	188	4186	-6.2	13.1	-0.42
246	SLE RA 1	11	136	2792	-4.61	8.44	-0.27
246	SLE RA 2	11	130	2749	-4.34	8.38	-0.27
246	SLE RA 3	11	135	2838	-4.55	8.61	-0.28
246	SLE RA 4	11	131	2812	-4.39	8.58	-0.27
246	SLE RA 5	11	128	2776	-4.23	8.49	-0.27
246	SLE RA 6	11	132	2864	-4.44	8.71	-0.28
246	SLE RA 7	11	129	2839	-4.28	8.68	-0.28
246	SLE RA 8	11	131	2845	-4.39	8.64	-0.28
246	SLE RA 9	11	127	2819	-4.23	8.61	-0.27
246	SLE RA 10	12	138	2965	-4.58	9.17	-0.29
246	SLE RA 11	12	143	3054	-4.79	9.4	-0.3
246	SLE RA 12	12	139	3028	-4.63	9.37	-0.3
246	SLE RA 13	12	136	2991	-4.47	9.27	-0.3
246	SLE RA 14	12	140	3080	-4.68	9.5	-0.3
246	SLE RA 15	12	137	3054	-4.52	9.47	-0.3
246	SLE RA 16	12	139	3061	-4.63	9.43	-0.3
246	SLE RA 17	12	136	3035	-4.47	9.4	-0.3
246	SLE RA 18	12	147	3100	-4.95	9.57	-0.31
246	SLE RA 19	12	144	3075	-4.79	9.53	-0.3
246	SLE RA 20	13	145	3127	-4.84	9.67	-0.31
246	SLE RA 21	13	141	3101	-4.68	9.63	-0.31
246	SLE FR 1	11	136	2792	-4.61	8.44	-0.27
246	SLE FR 2	11	135	2783	-4.55	8.43	-0.27
246	SLE FR 3	11	135	2803	-4.56	8.48	-0.27
246	SLE FR 4	11	138	2876	-4.66	8.77	-0.28
246	SLE FR 5	11	138	2895	-4.67	8.82	-0.28
246	SLE FR 6	12	142	2946	-4.78	9.01	-0.29
246	SLE QP 1	11	136	2792	-4.61	8.44	-0.27
246	SLE QP 2	11	139	2885	-4.71	8.78	-0.28
246	SLD 1	22	197	3676	-7.08	18.35	-0.48
246	SLD 2	22	197	3676	-7.08	18.35	-0.48
246	SLD 3	19	-317	2863	14.41	15.86	-0.42
246	SLD 4	19	-317	2863	14.41	15.86	-0.42
246	SLD 5	18	937	4355	-38.01	15.43	-0.43
246	SLD 6	18	937	4355	-38.01	15.43	-0.43
246	SLD 7	10	-778	1646	33.61	7.13	-0.24
246	SLD 8	10	-778	1646	33.61	7.13	-0.24
246	SLD 9	13	1056	4124	-43.03	10.43	-0.32
246	SLD 10	13	1056	4124	-43.03	10.43	-0.32
246	SLD 11	4	-658	1415	28.59	2.13	-0.13
246	SLD 12	4	-658	1415	28.59	2.13	-0.13
246	SLD 13	4	596	2906	-23.83	1.7	-0.14
246	SLD 14	4	596	2906	-23.83	1.7	-0.14
246	SLD 15	1	81	2093	-2.34	-0.79	-0.08
246	SLD 16	1	81	2093	-2.34	-0.79	-0.08
246	SLV 1	37	276	4785	-10.27	32.27	-0.76
246	SLV 2	37	276	4785	-10.27	32.27	-0.76
246	SLV 3	30	-939	2860	40.48	26.13	-0.62
246	SLV 4	30	-939	2860	40.48	26.13	-0.62
246	SLV 5	28	2023	6375	-83.36	25.14	-0.64
246	SLV 6	28	2023	6375	-83.36	25.14	-0.64
246	SLV 7	8	-2027	-43	85.83	4.67	-0.17
246	SLV 8	8	-2027	-43	85.83	4.67	-0.17
246	SLV 9	15	2306	5812	-95.25	12.89	-0.39
246	SLV 10	15	2306	5812	-95.25	12.89	-0.39
246	SLV 11	-6	-1745	-606	73.94	-7.58	0.08
246	SLV 12	-6	-1745	-606	73.94	-7.58	0.08
246	SLV 13	-8	1218	2909	-49.9	-8.57	0.06
246	SLV 14	-8	1218	2909	-49.9	-8.57	0.06
246	SLV 15	-14	3	984	0.85	-14.71	0.2
246	SLV 16	-14	3	984	0.85	-14.71	0.2
247	SLU 1	413	221	4394	-18.07	12.29	0.01
247	SLU 2	413	221	4390	-18.05	12.29	0.01
247	SLU 3	418	228	4456	-18.58	12.42	0.01
247	SLU 4	418	227	4454	-18.57	12.42	0.01
247	SLU 5	412	225	4383	-18.28	12.27	0.01
247	SLU 6	417	232	4449	-18.8	12.41	0.01
247	SLU 7	417	232	4447	-18.79	12.41	0.01
247	SLU 8	412	229	4380	-18.52	12.26	0.01
247	SLU 9	412	229	4378	-18.51	12.26	0.01
247	SLU 10	497	249	5106	-20.71	15	0.01
247	SLU 11	502	256	5172	-21.23	15.14	0.01

Nodo	Cont.	Reazione a traslazione			Reazione a rotazione		
Ind.	N.br.	x	y	z	x	y	z
247	SLU 12	501	256	5170	-21.22	15.13	0.01
247	SLU 13	496	253	5099	-20.93	14.98	0.01
247	SLU 14	501	260	5166	-21.46	15.12	0.01
247	SLU 15	501	260	5163	-21.45	15.12	0.01
247	SLU 16	496	258	5096	-21.18	14.98	0.01
247	SLU 17	496	257	5094	-21.16	14.97	0.01
247	SLU 18	533	262	5417	-21.87	16.17	0.01
247	SLU 19	533	262	5415	-21.85	16.16	0.01
247	SLU 20	532	266	5410	-22.09	16.15	0.01
247	SLU 21	532	266	5408	-22.08	16.15	0.01
247	SLU 22	490	251	5124	-20.88	14.71	0.01
247	SLU 23	490	250	5120	-20.86	14.71	0.01
247	SLU 24	495	258	5186	-21.38	14.85	0.01
247	SLU 25	494	257	5184	-21.37	14.84	0.01
247	SLU 26	489	254	5113	-21.08	14.7	0.01
247	SLU 27	494	262	5180	-21.61	14.83	0.01
247	SLU 28	494	261	5177	-21.6	14.83	0.01
247	SLU 29	489	259	5110	-21.32	14.69	0.01
247	SLU 30	489	259	5108	-21.31	14.68	0.01
247	SLU 31	574	279	5837	-23.51	17.42	0.01
247	SLU 32	578	286	5903	-24.04	17.56	0.01
247	SLU 33	578	286	5901	-24.03	17.55	0.01
247	SLU 34	573	283	5830	-23.74	17.41	0.01
247	SLU 35	578	290	5896	-24.26	17.54	0.01
247	SLU 36	578	290	5894	-24.25	17.54	0.01
247	SLU 37	573	288	5827	-23.98	17.4	0.01
247	SLU 38	573	287	5824	-23.97	17.39	0.01
247	SLU 39	610	292	6147	-24.67	18.59	0.01
247	SLU 40	610	292	6145	-24.66	18.58	0.01
247	SLU 41	609	296	6141	-24.89	18.57	0.01
247	SLU 42	609	296	6138	-24.88	18.57	0.01
247	SLU 43	511	277	5462	-22.53	15.15	0.01
247	SLU 44	511	277	5458	-22.51	15.15	0.01
247	SLU 45	515	284	5524	-23.04	15.28	0.01
247	SLU 46	515	283	5522	-23.03	15.28	0.01
247	SLU 47	510	281	5451	-22.74	15.13	0.01
247	SLU 48	515	288	5517	-23.26	15.27	0.01
247	SLU 49	515	288	5515	-23.25	15.27	0.01
247	SLU 50	510	285	5448	-22.98	15.12	0.01
247	SLU 51	510	285	5445	-22.97	15.12	0.01
247	SLU 52	594	305	6174	-25.17	17.86	0.01
247	SLU 53	599	312	6240	-25.7	17.99	0.01
247	SLU 54	599	312	6238	-25.68	17.99	0.01
247	SLU 55	594	309	6167	-25.39	17.84	0.01
247	SLU 56	599	316	6233	-25.92	17.98	0.01
247	SLU 57	599	316	6231	-25.91	17.98	0.01
247	SLU 58	594	314	6164	-25.64	17.83	0.01
247	SLU 59	593	313	6162	-25.63	17.83	0.01
247	SLU 60	631	318	6485	-26.33	19.02	0.01
247	SLU 61	630	318	6483	-26.32	19.02	0.01
247	SLU 62	630	322	6478	-26.55	19.01	0.01
247	SLU 63	630	322	6476	-26.54	19.01	0.01
247	SLU 64	588	307	6192	-25.34	17.57	0.01
247	SLU 65	587	306	6188	-25.32	17.57	0.01
247	SLU 66	592	314	6254	-25.84	17.7	0.01
247	SLU 67	592	313	6252	-25.83	17.7	0.01
247	SLU 68	587	310	6181	-25.54	17.55	0.01
247	SLU 69	592	318	6247	-26.07	17.69	0.01
247	SLU 70	592	317	6245	-26.06	17.69	0.01
247	SLU 71	586	315	6178	-25.78	17.54	0.01
247	SLU 72	586	315	6176	-25.77	17.54	0.01
247	SLU 73	671	335	6904	-27.97	20.28	0.01
247	SLU 74	676	342	6970	-28.5	20.41	0.01
247	SLU 75	676	342	6968	-28.49	20.41	0.01
247	SLU 76	671	339	6898	-28.2	20.26	0.01
247	SLU 77	675	346	6964	-28.72	20.4	0.01
247	SLU 78	675	346	6961	-28.71	20.4	0.01
247	SLU 79	670	344	6894	-28.44	20.25	0.01
247	SLU 80	670	343	6892	-28.43	20.25	0.01
247	SLU 81	707	348	7215	-29.13	21.44	0.01
247	SLU 82	707	348	7213	-29.12	21.44	0.01
247	SLU 83	707	352	7208	-29.35	21.43	0.01
247	SLU 84	707	352	7206	-29.34	21.43	0.01
247	SLE RA 1	435	229	4602	-18.87	12.98	0.01
247	SLE RA 2	435	229	4600	-18.86	12.98	0.01
247	SLE RA 3	438	234	4644	-19.21	13.07	0.01
247	SLE RA 4	438	234	4643	-19.2	13.07	0.01
247	SLE RA 5	435	232	4595	-19.01	12.97	0.01
247	SLE RA 6	438	237	4639	-19.36	13.06	0.01
247	SLE RA 7	438	237	4638	-19.35	13.06	0.01
247	SLE RA 8	434	235	4593	-19.17	12.97	0.01
247	SLE RA 9	434	235	4592	-19.16	12.96	0.01
247	SLE RA 10	491	248	5077	-20.63	14.79	0.01
247	SLE RA 11	494	253	5122	-20.98	14.88	0.01
247	SLE RA 12	494	253	5120	-20.97	14.88	0.01
247	SLE RA 13	490	251	5073	-20.78	14.78	0.01
247	SLE RA 14	494	256	5117	-21.13	14.87	0.01
247	SLE RA 15	494	256	5115	-21.12	14.87	0.01
247	SLE RA 16	490	254	5071	-20.94	14.77	0.01
247	SLE RA 17	490	254	5069	-20.93	14.77	0.01
247	SLE RA 18	515	257	5285	-21.4	15.57	0.01

Nodo	Cont.	Reazione a traslazione			Reazione a rotazione		
Ind.	N.br.	x	y	z	x	y	z
247	SLE RA 19	515	257	5283	-21.39	15.56	0.01
247	SLE RA 20	515	259	5280	-21.55	15.56	0.01
247	SLE RA 21	514	259	5279	-21.54	15.56	0.01
247	SLE FR 1	435	229	4602	-18.87	12.98	0.01
247	SLE FR 2	435	229	4602	-18.87	12.98	0.01
247	SLE FR 3	435	230	4601	-18.93	12.98	0.01
247	SLE FR 4	459	238	4807	-19.63	13.76	0.01
247	SLE FR 5	459	239	4805	-19.69	13.76	0.01
247	SLE FR 6	475	243	4944	-20.14	14.28	0.01
247	SLE QP 1	435	229	4602	-18.87	12.98	0.01
247	SLE QP 2	459	238	4807	-19.63	13.76	0.01
247	SLD 1	831	474	7331	-32.63	27.79	0.04
247	SLD 2	831	474	7331	-32.63	27.79	0.04
247	SLD 3	749	203	6013	-19.43	25.55	0.01
247	SLD 4	749	203	6013	-19.43	25.55	0.01
247	SLD 5	695	719	7562	-43.55	21.37	0.06
247	SLD 6	695	719	7562	-43.55	21.37	0.06
247	SLD 7	422	-183	3171	0.45	13.89	-0.04
247	SLD 8	422	-183	3171	0.45	13.89	-0.04
247	SLD 9	496	659	6443	-39.71	13.63	0.06
247	SLD 10	496	659	6443	-39.71	13.63	0.06
247	SLD 11	223	-244	2052	4.28	6.14	-0.04
247	SLD 12	223	-244	2052	4.28	6.14	-0.04
247	SLD 13	169	272	3601	-19.84	1.97	0.01
247	SLD 14	169	272	3601	-19.84	1.97	0.01
247	SLD 15	87	1	2284	-6.64	-0.27	-0.02
247	SLD 16	87	1	2284	-6.64	-0.27	-0.02
247	SLV 1	1327	797	10814	-50.49	46.37	0.07
247	SLV 2	1327	797	10814	-50.49	46.37	0.07
247	SLV 3	1129	154	7672	-19.09	40.92	0
247	SLV 4	1129	154	7672	-19.09	40.92	0
247	SLV 5	1019	1380	11375	-76.51	31.81	0.13
247	SLV 6	1019	1380	11375	-76.51	31.81	0.13
247	SLV 7	360	-762	901	28.15	13.64	-0.1
247	SLV 8	360	-762	901	28.15	13.64	-0.1
247	SLV 9	558	1237	8713	-67.41	13.88	0.12
247	SLV 10	558	1237	8713	-67.41	13.88	0.12
247	SLV 11	-101	-905	-1761	37.24	-4.29	-0.11
247	SLV 12	-101	-905	-1761	37.24	-4.29	-0.11
247	SLV 13	-211	321	1942	-20.17	-13.4	0.02
247	SLV 14	-211	321	1942	-20.17	-13.4	0.02
247	SLV 15	-409	-322	-1200	11.23	-18.85	-0.05
247	SLV 16	-409	-322	-1200	11.23	-18.85	-0.05
248	SLU 1	221	0	2644	-0.63	8.65	0.01
248	SLU 2	221	0	2642	-0.63	8.66	0.01
248	SLU 3	222	0	2679	-0.65	8.66	0.01
248	SLU 4	222	0	2678	-0.64	8.66	0.01
248	SLU 5	222	0	2638	-0.63	8.66	0.01
248	SLU 6	222	0	2675	-0.64	8.66	0.01
248	SLU 7	222	0	2674	-0.64	8.67	0.01
248	SLU 8	222	0	2635	-0.62	8.66	0.01
248	SLU 9	222	0	2634	-0.62	8.67	0.01
248	SLU 10	288	0	3079	-0.71	11.27	0.01
248	SLU 11	289	0	3117	-0.72	11.27	0.01
248	SLU 12	289	0	3116	-0.72	11.27	0.01
248	SLU 13	288	0	3075	-0.7	11.28	0.01
248	SLU 14	289	0	3113	-0.71	11.28	0.01
248	SLU 15	289	0	3111	-0.71	11.28	0.01
248	SLU 16	288	0	3073	-0.7	11.28	0.01
248	SLU 17	288	0	3072	-0.69	11.28	0.01
248	SLU 18	317	0	3269	-0.74	12.38	0.01
248	SLU 19	317	0	3268	-0.74	12.39	0.01
248	SLU 20	317	0	3265	-0.73	12.39	0.01
248	SLU 21	317	0	3264	-0.73	12.39	0.01
248	SLU 22	271	0	3082	-0.74	10.57	0.01
248	SLU 23	271	0	3080	-0.74	10.58	0.01
248	SLU 24	272	0	3118	-0.76	10.58	0.01
248	SLU 25	272	0	3117	-0.75	10.58	0.01
248	SLU 26	272	0	3076	-0.74	10.58	0.01
248	SLU 27	272	0	3114	-0.75	10.58	0.01
248	SLU 28	272	0	3112	-0.75	10.59	0.01
248	SLU 29	271	0	3074	-0.73	10.58	0.01
248	SLU 30	272	0	3073	-0.73	10.59	0.01
248	SLU 31	338	0	3518	-0.82	13.19	0.01
248	SLU 32	339	0	3556	-0.83	13.19	0.01
248	SLU 33	339	0	3554	-0.83	13.19	0.01
248	SLU 34	338	0	3514	-0.81	13.2	0.01
248	SLU 35	339	0	3551	-0.82	13.2	0.01
248	SLU 36	339	0	3550	-0.82	13.2	0.01
248	SLU 37	338	0	3511	-0.8	13.2	0.01
248	SLU 38	338	0	3510	-0.8	13.2	0.01
248	SLU 39	367	0	3708	-0.85	14.3	0.01
248	SLU 40	367	0	3706	-0.85	14.31	0.01
248	SLU 41	367	0	3703	-0.84	14.31	0.01
248	SLU 42	367	0	3702	-0.84	14.31	0.01
248	SLU 43	271	0	3287	-0.79	10.59	0.01
248	SLU 44	271	0	3285	-0.79	10.59	0.01
248	SLU 45	271	0	3322	-0.8	10.59	0.01
248	SLU 46	271	0	3321	-0.8	10.6	0.01
248	SLU 47	271	0	3280	-0.78	10.6	0.01
248	SLU 48	271	0	3318	-0.79	10.6	0.01

Nodo	Cont.	Reazione a traslazione			Reazione a rotazione		
Ind.	N.br.	x	y	z	x	y	z
248	SLU 49	271	0	3317	-0.79	10.6	0.01
248	SLU 50	271	0	3278	-0.77	10.6	0.01
248	SLU 51	271	0	3277	-0.77	10.6	0.01
248	SLU 52	338	0	3722	-0.86	13.21	0.01
248	SLU 53	338	0	3760	-0.87	13.21	0.01
248	SLU 54	338	0	3759	-0.87	13.21	0.01
248	SLU 55	338	0	3718	-0.85	13.21	0.01
248	SLU 56	338	0	3756	-0.87	13.21	0.01
248	SLU 57	338	0	3754	-0.87	13.22	0.01
248	SLU 58	338	0	3716	-0.85	13.21	0.01
248	SLU 59	338	0	3715	-0.85	13.22	0.01
248	SLU 60	366	0	3912	-0.9	14.32	0.01
248	SLU 61	366	0	3911	-0.89	14.32	0.01
248	SLU 62	366	0	3908	-0.89	14.33	0.01
248	SLU 63	366	0	3906	-0.89	14.33	0.01
248	SLU 64	321	0	3725	-0.9	12.51	0.01
248	SLU 65	321	0	3723	-0.9	12.51	0.01
248	SLU 66	321	0	3761	-0.91	12.51	0.01
248	SLU 67	321	0	3760	-0.91	12.52	0.01
248	SLU 68	321	0	3719	-0.89	12.52	0.01
248	SLU 69	321	0	3757	-0.9	12.52	0.01
248	SLU 70	321	0	3755	-0.9	12.52	0.01
248	SLU 71	321	0	3717	-0.88	12.52	0.01
248	SLU 72	321	0	3715	-0.88	12.52	0.01
248	SLU 73	388	0	4161	-0.97	15.13	0.01
248	SLU 74	388	0	4198	-0.98	15.13	0.01
248	SLU 75	388	0	4197	-0.98	15.13	0.01
248	SLU 76	388	0	4157	-0.96	15.13	0.01
248	SLU 77	388	0	4194	-0.98	15.13	0.01
248	SLU 78	388	0	4193	-0.97	15.14	0.01
248	SLU 79	388	0	4154	-0.96	15.13	0.01
248	SLU 80	388	0	4153	-0.96	15.14	0.01
248	SLU 81	416	0	4350	-1	16.24	0.01
248	SLU 82	416	0	4349	-1	16.24	0.01
248	SLU 83	416	0	4346	-1	16.25	0.01
248	SLU 84	416	0	4345	-1	16.25	0.01
248	SLE RA 1	236	0	2769	-0.67	9.2	0.01
248	SLE RA 2	236	0	2768	-0.67	9.2	0.01
248	SLE RA 3	236	0	2793	-0.67	9.2	0.01
248	SLE RA 4	236	0	2792	-0.67	9.21	0.01
248	SLE RA 5	236	0	2765	-0.66	9.21	0.01
248	SLE RA 6	236	0	2790	-0.67	9.21	0.01
248	SLE RA 7	236	0	2789	-0.67	9.21	0.01
248	SLE RA 8	236	0	2764	-0.66	9.21	0.01
248	SLE RA 9	236	0	2763	-0.66	9.21	0.01
248	SLE RA 10	280	0	3060	-0.72	10.94	0.01
248	SLE RA 11	280	0	3085	-0.72	10.95	0.01
248	SLE RA 12	280	0	3084	-0.72	10.95	0.01
248	SLE RA 13	280	0	3057	-0.71	10.95	0.01
248	SLE RA 14	280	0	3082	-0.72	10.95	0.01
248	SLE RA 15	281	0	3081	-0.72	10.95	0.01
248	SLE RA 16	280	0	3055	-0.71	10.95	0.01
248	SLE RA 17	280	0	3054	-0.71	10.95	0.01
248	SLE RA 18	299	0	3186	-0.74	11.69	0.01
248	SLE RA 19	299	0	3185	-0.74	11.69	0.01
248	SLE RA 20	299	0	3183	-0.73	11.69	0.01
248	SLE RA 21	299	0	3182	-0.73	11.69	0.01
248	SLE FR 1	236	0	2769	-0.67	9.2	0.01
248	SLE FR 2	236	0	2769	-0.67	9.2	0.01
248	SLE FR 3	236	0	2768	-0.66	9.2	0.01
248	SLE FR 4	255	0	2894	-0.69	9.95	0.01
248	SLE FR 5	255	0	2893	-0.69	9.95	0.01
248	SLE FR 6	267	0	2978	-0.7	10.44	0.01
248	SLE QP 1	236	0	2769	-0.67	9.2	0.01
248	SLE QP 2	255	0	2894	-0.69	9.95	0.01
248	SLD 1	746	1	4192	-2.23	31.91	0.01
248	SLD 2	746	1	4192	-2.23	31.91	0.01
248	SLD 3	806	0	3476	0.31	34.34	0.01
248	SLD 4	806	0	3476	0.31	34.34	0.01
248	SLD 5	311	3	4370	-5.01	12.84	0
248	SLD 6	311	3	4370	-5.01	12.84	0
248	SLD 7	511	-3	1982	3.47	20.96	0.01
248	SLD 8	511	-3	1982	3.47	20.96	0.01
248	SLD 9	-2	2	3807	-4.85	-1.07	0
248	SLD 10	-2	2	3807	-4.85	-1.07	0
248	SLD 11	198	-3	1418	3.64	7.05	0.01
248	SLD 12	198	-3	1418	3.64	7.05	0.01
248	SLD 13	-296	0	2313	-1.69	-14.45	0
248	SLD 14	-296	0	2313	-1.69	-14.45	0
248	SLD 15	-236	-1	1596	0.86	-12.02	0.01
248	SLD 16	-236	-1	1596	0.86	-12.02	0.01
248	SLV 1	1378	3	5985	-4.52	60.22	0.01
248	SLV 2	1378	3	5985	-4.52	60.22	0.01
248	SLV 3	1523	-1	4276	1.78	66.13	0.02
248	SLV 4	1523	-1	4276	1.78	66.13	0.02
248	SLV 5	372	7	6413	-11.39	16.07	-0.01
248	SLV 6	372	7	6413	-11.39	16.07	-0.01
248	SLV 7	855	-6	717	9.6	35.76	0.02
248	SLV 8	855	-6	717	9.6	35.76	0.02
248	SLV 9	-345	6	5072	-10.98	-15.87	-0.01
248	SLV 10	-345	6	5072	-10.98	-15.87	-0.01

Nodo	Cont.	Reazione a traslazione			Reazione a rotazione		
Ind.	N.br.	x	y	z	x	y	z
248	SLV 11	137	-7	-625	10.01	3.82	0.02
248	SLV 12	137	-7	-625	10.01	3.82	0.02
248	SLV 13	-1014	1	1513	-3.16	-46.24	0
248	SLV 14	-1014	1	1513	-3.16	-46.24	0
248	SLV 15	-869	-3	-196	3.14	-40.33	0
248	SLV 16	-869	-3	-196	3.14	-40.33	0
249	SLU 1	101	5	2416	-1.78	7.28	0
249	SLU 2	101	5	2415	-1.77	7.29	0
249	SLU 3	100	5	2447	-1.81	7.3	0
249	SLU 4	100	5	2446	-1.81	7.31	0
249	SLU 5	101	5	2411	-1.76	7.29	0
249	SLU 6	100	5	2443	-1.8	7.31	0
249	SLU 7	100	5	2442	-1.8	7.31	0
249	SLU 8	101	5	2410	-1.76	7.28	0
249	SLU 9	101	5	2409	-1.75	7.29	0
249	SLU 10	147	5	2826	-2.01	9.7	0
249	SLU 11	146	6	2858	-2.04	9.72	0
249	SLU 12	146	6	2857	-2.04	9.72	0
249	SLU 13	147	5	2823	-2	9.7	0
249	SLU 14	146	5	2855	-2.03	9.72	0
249	SLU 15	146	5	2854	-2.03	9.72	0
249	SLU 16	147	5	2821	-1.99	9.7	0
249	SLU 17	147	5	2820	-1.99	9.7	0
249	SLU 18	166	6	3004	-2.11	10.73	0
249	SLU 19	167	6	3003	-2.11	10.74	0
249	SLU 20	167	6	3001	-2.1	10.73	0
249	SLU 21	167	6	3000	-2.1	10.74	0
249	SLU 22	131	6	2818	-2.08	9.12	0
249	SLU 23	131	6	2816	-2.08	9.12	0
249	SLU 24	130	6	2848	-2.12	9.14	0
249	SLU 25	130	6	2847	-2.12	9.14	0
249	SLU 26	131	5	2813	-2.07	9.12	0
249	SLU 27	130	6	2845	-2.11	9.14	0
249	SLU 28	130	6	2844	-2.11	9.14	0
249	SLU 29	131	5	2811	-2.06	9.12	0
249	SLU 30	131	5	2810	-2.06	9.12	0
249	SLU 31	177	6	3228	-2.31	11.54	0
249	SLU 32	176	6	3260	-2.35	11.55	0
249	SLU 33	176	6	3259	-2.35	11.56	0
249	SLU 34	177	6	3224	-2.3	11.54	0
249	SLU 35	176	6	3256	-2.34	11.55	0
249	SLU 36	176	6	3255	-2.34	11.56	0
249	SLU 37	177	6	3222	-2.3	11.53	0
249	SLU 38	177	6	3221	-2.29	11.54	0
249	SLU 39	197	7	3406	-2.42	12.57	0
249	SLU 40	197	7	3405	-2.41	12.57	0
249	SLU 41	197	7	3402	-2.41	12.57	0
249	SLU 42	197	7	3401	-2.4	12.57	0
249	SLU 43	120	6	3004	-2.2	8.84	0
249	SLU 44	121	6	3002	-2.2	8.84	0
249	SLU 45	119	6	3034	-2.24	8.86	0
249	SLU 46	119	6	3033	-2.24	8.86	0
249	SLU 47	121	6	2999	-2.19	8.84	0
249	SLU 48	120	6	3031	-2.23	8.86	0
249	SLU 49	120	6	3030	-2.23	8.86	0
249	SLU 50	121	6	2997	-2.18	8.84	0
249	SLU 51	121	6	2996	-2.18	8.84	0
249	SLU 52	167	6	3414	-2.43	11.26	0
249	SLU 53	166	7	3446	-2.47	11.27	0
249	SLU 54	166	7	3445	-2.47	11.28	0
249	SLU 55	167	6	3410	-2.42	11.26	0
249	SLU 56	166	7	3442	-2.46	11.28	0
249	SLU 57	166	7	3441	-2.46	11.28	0
249	SLU 58	167	6	3408	-2.42	11.26	0
249	SLU 59	167	6	3407	-2.41	11.26	0
249	SLU 60	186	7	3592	-2.54	12.29	0
249	SLU 61	186	7	3591	-2.54	12.29	0
249	SLU 62	187	7	3588	-2.53	12.29	0
249	SLU 63	187	7	3587	-2.53	12.29	0
249	SLU 64	150	7	3405	-2.51	10.67	0
249	SLU 65	151	7	3403	-2.51	10.68	0
249	SLU 66	149	7	3435	-2.55	10.69	0
249	SLU 67	150	7	3434	-2.54	10.7	0
249	SLU 68	151	7	3400	-2.5	10.68	0
249	SLU 69	150	7	3432	-2.54	10.69	0
249	SLU 70	150	7	3431	-2.53	10.7	0
249	SLU 71	151	7	3398	-2.49	10.67	0
249	SLU 72	151	7	3397	-2.49	10.68	0
249	SLU 73	197	7	3815	-2.74	13.09	0
249	SLU 74	196	8	3847	-2.78	13.11	0
249	SLU 75	196	8	3846	-2.78	13.11	0
249	SLU 76	197	7	3811	-2.73	13.09	0
249	SLU 77	196	7	3843	-2.77	13.11	0
249	SLU 78	196	7	3842	-2.77	13.11	0
249	SLU 79	197	7	3810	-2.72	13.09	0
249	SLU 80	197	7	3809	-2.72	13.09	0
249	SLU 81	216	8	3993	-2.84	14.12	0
249	SLU 82	217	8	3992	-2.84	14.12	0
249	SLU 83	217	8	3990	-2.83	14.12	0
249	SLU 84	217	8	3989	-2.83	14.13	0
249	SLE RA 1	109	5	2531	-1.86	7.81	0

Nodo	Cont.	Reazione a traslazione			Reazione a rotazione		
Ind.	N.br.	x	y	z	x	y	z
249	SLE RA 2	109	5	2530	-1.86	7.81	0
249	SLE RA 3	108	5	2551	-1.89	7.82	0
249	SLE RA 4	109	5	2551	-1.89	7.82	0
249	SLE RA 5	109	5	2528	-1.86	7.81	0
249	SLE RA 6	109	5	2549	-1.88	7.82	0
249	SLE RA 7	109	5	2548	-1.88	7.82	0
249	SLE RA 8	109	5	2526	-1.85	7.81	0
249	SLE RA 9	110	5	2526	-1.85	7.81	0
249	SLE RA 10	140	5	2804	-2.02	9.42	0
249	SLE RA 11	139	5	2826	-2.04	9.43	0
249	SLE RA 12	139	5	2825	-2.04	9.43	0
249	SLE RA 13	140	5	2802	-2.01	9.42	0
249	SLE RA 14	139	5	2823	-2.04	9.43	0
249	SLE RA 15	139	5	2823	-2.03	9.43	0
249	SLE RA 16	140	5	2801	-2.01	9.42	0
249	SLE RA 17	140	5	2800	-2	9.42	0
249	SLE RA 18	153	6	2923	-2.09	10.11	0
249	SLE RA 19	153	6	2922	-2.08	10.11	0
249	SLE RA 20	153	6	2921	-2.08	10.11	0
249	SLE RA 21	153	6	2920	-2.08	10.11	0
249	SLE FR 1	109	5	2531	-1.86	7.81	0
249	SLE FR 2	109	5	2531	-1.86	7.81	0
249	SLE FR 3	109	5	2530	-1.86	7.81	0
249	SLE FR 4	122	5	2648	-1.93	8.5	0
249	SLE FR 5	122	5	2648	-1.93	8.5	0
249	SLE FR 6	131	5	2727	-1.97	8.96	0
249	SLE QP 1	109	5	2531	-1.86	7.81	0
249	SLE QP 2	122	5	2649	-1.93	8.5	0
249	SLD 1	628	8	3603	-5.22	30.55	0
249	SLD 2	628	8	3603	-5.22	30.55	0
249	SLD 3	703	4	3037	0.11	32.97	0.01
249	SLD 4	703	4	3037	0.11	32.97	0.01
249	SLD 5	162	12	3794	-11.01	11.43	0
249	SLD 6	162	12	3794	-11.01	11.43	0
249	SLD 7	409	-2	1906	6.77	19.52	0.01
249	SLD 8	409	-2	1906	6.77	19.52	0.01
249	SLD 9	-164	12	3391	-10.63	-2.53	0
249	SLD 10	-164	12	3391	-10.63	-2.53	0
249	SLD 11	83	-2	1503	7.15	5.56	0.01
249	SLD 12	83	-2	1503	7.15	5.56	0.01
249	SLD 13	-458	7	2260	-3.97	-15.98	0
249	SLD 14	-458	7	2260	-3.97	-15.98	0
249	SLD 15	-384	2	1694	1.36	-13.55	0
249	SLD 16	-384	2	1694	1.36	-13.55	0
249	SLV 1	1277	12	4921	-10.11	58.93	0.01
249	SLV 2	1277	12	4921	-10.11	58.93	0.01
249	SLV 3	1455	1	3569	3.16	64.82	0.01
249	SLV 4	1455	1	3569	3.16	64.82	0.01
249	SLV 5	200	23	5380	-24.5	14.68	-0.01
249	SLV 6	200	23	5380	-24.5	14.68	-0.01
249	SLV 7	791	-12	875	19.71	34.34	0.02
249	SLV 8	791	-12	875	19.71	34.34	0.02
249	SLV 9	-547	22	4422	-23.58	-17.35	-0.01
249	SLV 10	-547	22	4422	-23.58	-17.35	-0.01
249	SLV 11	45	-12	-83	20.64	2.31	0.01
249	SLV 12	45	-12	-83	20.64	2.31	0.01
249	SLV 13	-1210	9	1728	-7.02	-47.83	-0.01
249	SLV 14	-1210	9	1728	-7.02	-47.83	-0.01
249	SLV 15	-1033	-1	376	6.25	-41.94	0
249	SLV 16	-1033	-1	376	6.25	-41.94	0
250	SLU 1	-26	9	2218	-2.79	-2.12	-0.01
250	SLU 2	-26	9	2217	-2.79	-2.11	-0.01
250	SLU 3	-29	9	2244	-2.85	-2.25	-0.01
250	SLU 4	-29	9	2243	-2.85	-2.24	-0.01
250	SLU 5	-25	9	2215	-2.78	-2.09	-0.01
250	SLU 6	-28	9	2242	-2.85	-2.23	-0.01
250	SLU 7	-28	9	2241	-2.84	-2.22	-0.01
250	SLU 8	-25	9	2214	-2.78	-2.08	-0.01
250	SLU 9	-25	9	2213	-2.78	-2.08	-0.01
250	SLU 10	-7	10	2609	-3.14	-1.57	-0.02
250	SLU 11	-10	10	2636	-3.2	-1.71	-0.02
250	SLU 12	-10	10	2635	-3.2	-1.71	-0.02
250	SLU 13	-6	10	2606	-3.13	-1.55	-0.02
250	SLU 14	-9	10	2633	-3.2	-1.7	-0.02
250	SLU 15	-9	10	2632	-3.19	-1.69	-0.02
250	SLU 16	-6	10	2605	-3.13	-1.55	-0.02
250	SLU 17	-6	10	2604	-3.13	-1.54	-0.02
250	SLU 18	1	11	2778	-3.29	-1.35	-0.02
250	SLU 19	1	11	2777	-3.29	-1.35	-0.02
250	SLU 20	2	11	2775	-3.29	-1.34	-0.02
250	SLU 21	2	11	2774	-3.28	-1.33	-0.02
250	SLU 22	-21	10	2589	-3.25	-2.16	-0.02
250	SLU 23	-21	10	2587	-3.25	-2.15	-0.02
250	SLU 24	-24	11	2614	-3.31	-2.29	-0.02
250	SLU 25	-24	11	2614	-3.31	-2.28	-0.02
250	SLU 26	-21	10	2585	-3.24	-2.13	-0.02
250	SLU 27	-24	10	2612	-3.31	-2.27	-0.02
250	SLU 28	-23	10	2611	-3.3	-2.27	-0.02
250	SLU 29	-20	10	2584	-3.24	-2.12	-0.02
250	SLU 30	-20	10	2583	-3.23	-2.12	-0.02
250	SLU 31	-2	12	2979	-3.6	-1.61	-0.02

Nodo	Cont.	Reazione a traslazione			Reazione a rotazione		
Ind.	N.br.	x	y	z	x	y	z
250	SLU 32	-5	12	3006	-3.66	-1.75	-0.02
250	SLU 33	-5	12	3005	-3.66	-1.75	-0.02
250	SLU 34	-1	12	2976	-3.59	-1.59	-0.02
250	SLU 35	-4	12	3003	-3.66	-1.74	-0.02
250	SLU 36	-4	12	3003	-3.65	-1.73	-0.02
250	SLU 37	-1	12	2975	-3.59	-1.59	-0.02
250	SLU 38	-1	12	2974	-3.58	-1.58	-0.02
250	SLU 39	6	13	3148	-3.75	-1.39	-0.02
250	SLU 40	6	13	3147	-3.75	-1.39	-0.02
250	SLU 41	7	12	3145	-3.74	-1.38	-0.02
250	SLU 42	7	12	3145	-3.74	-1.37	-0.02
250	SLU 43	-36	11	2757	-3.47	-2.74	-0.02
250	SLU 44	-35	11	2756	-3.47	-2.73	-0.02
250	SLU 45	-38	11	2783	-3.53	-2.87	-0.02
250	SLU 46	-38	11	2782	-3.53	-2.86	-0.02
250	SLU 47	-35	11	2753	-3.46	-2.71	-0.02
250	SLU 48	-38	11	2780	-3.53	-2.85	-0.02
250	SLU 49	-38	11	2780	-3.53	-2.85	-0.02
250	SLU 50	-35	11	2752	-3.46	-2.7	-0.02
250	SLU 51	-35	11	2751	-3.46	-2.7	-0.02
250	SLU 52	-16	12	3147	-3.82	-2.19	-0.02
250	SLU 53	-19	12	3174	-3.88	-2.34	-0.02
250	SLU 54	-19	12	3174	-3.88	-2.33	-0.02
250	SLU 55	-16	12	3145	-3.81	-2.18	-0.02
250	SLU 56	-19	12	3172	-3.88	-2.32	-0.02
250	SLU 57	-19	12	3171	-3.88	-2.31	-0.02
250	SLU 58	-16	12	3144	-3.81	-2.17	-0.02
250	SLU 59	-16	12	3143	-3.81	-2.16	-0.02
250	SLU 60	-8	13	3316	-3.97	-1.97	-0.02
250	SLU 61	-8	13	3316	-3.97	-1.97	-0.02
250	SLU 62	-8	13	3314	-3.97	-1.96	-0.02
250	SLU 63	-8	13	3313	-3.96	-1.95	-0.02
250	SLU 64	-31	12	3127	-3.93	-2.78	-0.02
250	SLU 65	-31	12	3126	-3.93	-2.77	-0.02
250	SLU 66	-33	13	3153	-3.99	-2.91	-0.02
250	SLU 67	-33	13	3152	-3.99	-2.9	-0.02
250	SLU 68	-30	12	3123	-3.92	-2.75	-0.02
250	SLU 69	-33	12	3151	-3.99	-2.89	-0.02
250	SLU 70	-33	12	3150	-3.98	-2.89	-0.02
250	SLU 71	-30	12	3122	-3.92	-2.75	-0.02
250	SLU 72	-30	12	3122	-3.91	-2.74	-0.02
250	SLU 73	-11	14	3517	-4.28	-2.23	-0.02
250	SLU 74	-14	14	3545	-4.34	-2.38	-0.02
250	SLU 75	-14	14	3544	-4.34	-2.37	-0.02
250	SLU 76	-11	14	3515	-4.27	-2.22	-0.02
250	SLU 77	-14	14	3542	-4.34	-2.36	-0.02
250	SLU 78	-14	14	3541	-4.33	-2.35	-0.02
250	SLU 79	-11	14	3514	-4.27	-2.21	-0.02
250	SLU 80	-11	14	3513	-4.27	-2.2	-0.02
250	SLU 81	-3	15	3687	-4.43	-2.02	-0.02
250	SLU 82	-3	15	3686	-4.43	-2.01	-0.02
250	SLU 83	-3	15	3684	-4.42	-2	-0.02
250	SLU 84	-3	14	3683	-4.42	-1.99	-0.02
250	SLE RA 1	-25	9	2324	-2.92	-2.13	-0.02
250	SLE RA 2	-25	9	2323	-2.92	-2.12	-0.02
250	SLE RA 3	-27	9	2341	-2.96	-2.22	-0.02
250	SLE RA 4	-26	9	2341	-2.96	-2.21	-0.02
250	SLE RA 5	-24	9	2322	-2.92	-2.11	-0.02
250	SLE RA 6	-26	9	2340	-2.96	-2.21	-0.02
250	SLE RA 7	-26	9	2339	-2.96	-2.2	-0.02
250	SLE RA 8	-24	9	2321	-2.91	-2.11	-0.02
250	SLE RA 9	-24	9	2320	-2.91	-2.1	-0.02
250	SLE RA 10	-12	10	2584	-3.15	-1.77	-0.02
250	SLE RA 11	-14	10	2602	-3.2	-1.86	-0.02
250	SLE RA 12	-14	10	2602	-3.2	-1.86	-0.02
250	SLE RA 13	-12	10	2583	-3.15	-1.75	-0.02
250	SLE RA 14	-14	10	2601	-3.19	-1.85	-0.02
250	SLE RA 15	-13	10	2600	-3.19	-1.84	-0.02
250	SLE RA 16	-11	10	2582	-3.15	-1.75	-0.02
250	SLE RA 17	-11	10	2581	-3.15	-1.75	-0.02
250	SLE RA 18	-6	11	2697	-3.26	-1.62	-0.02
250	SLE RA 19	-6	11	2697	-3.26	-1.62	-0.02
250	SLE RA 20	-6	11	2695	-3.25	-1.61	-0.02
250	SLE RA 21	-6	11	2695	-3.25	-1.6	-0.02
250	SLE FR 1	-25	9	2324	-2.92	-2.13	-0.02
250	SLE FR 2	-25	9	2324	-2.92	-2.13	-0.02
250	SLE FR 3	-25	9	2324	-2.92	-2.13	-0.02
250	SLE FR 4	-19	10	2436	-3.02	-1.98	-0.02
250	SLE FR 5	-19	10	2435	-3.02	-1.97	-0.02
250	SLE FR 6	-16	10	2511	-3.09	-1.88	-0.02
250	SLE QP 1	-25	9	2324	-2.92	-2.13	-0.02
250	SLE QP 2	-19	10	2436	-3.02	-1.98	-0.02
250	SLD 1	501	15	3112	-8.26	20.13	-0.02
250	SLD 2	501	15	3112	-8.26	20.13	-0.02
250	SLD 3	586	7	2671	0.06	23.79	-0.01
250	SLD 4	586	7	2671	0.06	23.79	-0.01
250	SLD 5	7	23	3307	-17.22	-0.9	-0.03
250	SLD 6	7	23	3307	-17.22	-0.9	-0.03
250	SLD 7	292	-3	1838	10.53	11.3	0
250	SLD 8	292	-3	1838	10.53	11.3	0
250	SLD 9	-330	22	3034	-16.57	-15.26	-0.04

Nodo	Cont.	Reazione a traslazione			Reazione a rotazione		
Ind.	N.br.	x	y	z	x	y	z
250	SLD 10	-330	22	3034	-16.57	-15.26	-0.04
250	SLD 11	-46	-4	1565	11.17	-3.06	0
250	SLD 12	-46	-4	1565	11.17	-3.06	0
250	SLD 13	-625	12	2201	-6.11	-27.75	-0.03
250	SLD 14	-625	12	2201	-6.11	-27.75	-0.03
250	SLD 15	-539	4	1761	2.22	-24.09	-0.02
250	SLD 16	-539	4	1761	2.22	-24.09	-0.02
250	SLV 1	1166	22	4043	-16.11	48.45	-0.02
250	SLV 2	1166	22	4043	-16.11	48.45	-0.02
250	SLV 3	1370	3	2990	4.72	57.18	0.01
250	SLV 4	1370	3	2990	4.72	57.18	0.01
250	SLV 5	28	42	4514	-38.54	-0.08	-0.06
250	SLV 6	28	42	4514	-38.54	-0.08	-0.06
250	SLV 7	706	-22	1006	30.89	29	0.03
250	SLV 8	706	-22	1006	30.89	29	0.03
250	SLV 9	-745	41	3866	-36.94	-32.96	-0.06
250	SLV 10	-745	41	3866	-36.94	-32.96	-0.06
250	SLV 11	-66	-23	358	32.49	-3.87	0.02
250	SLV 12	-66	-23	358	32.49	-3.87	0.02
250	SLV 13	-1408	16	1882	-10.77	-61.13	-0.04
250	SLV 14	-1408	16	1882	-10.77	-61.13	-0.04
250	SLV 15	-1205	-3	830	10.06	-52.41	-0.02
250	SLV 16	-1205	-3	830	10.06	-52.41	-0.02
251	SLU 1	-23	10	2042	-3.02	1.69	-0.03
251	SLU 2	-23	10	2041	-3.02	1.7	-0.03
251	SLU 3	-25	10	2064	-3.09	1.66	-0.03
251	SLU 4	-25	10	2063	-3.09	1.67	-0.03
251	SLU 5	-23	10	2039	-3.02	1.7	-0.03
251	SLU 6	-25	10	2062	-3.09	1.67	-0.03
251	SLU 7	-25	10	2062	-3.09	1.67	-0.03
251	SLU 8	-22	10	2039	-3.02	1.7	-0.03
251	SLU 9	-22	10	2038	-3.02	1.7	-0.03
251	SLU 10	-9	12	2413	-3.34	2.7	-0.03
251	SLU 11	-12	12	2436	-3.42	2.66	-0.03
251	SLU 12	-11	12	2435	-3.41	2.67	-0.03
251	SLU 13	-9	12	2411	-3.34	2.7	-0.03
251	SLU 14	-11	12	2434	-3.41	2.67	-0.03
251	SLU 15	-11	12	2434	-3.41	2.67	-0.03
251	SLU 16	-9	12	2411	-3.34	2.7	-0.03
251	SLU 17	-9	12	2410	-3.34	2.7	-0.03
251	SLU 18	-4	13	2574	-3.48	3.12	-0.03
251	SLU 19	-4	13	2573	-3.48	3.13	-0.03
251	SLU 20	-4	13	2572	-3.48	3.13	-0.03
251	SLU 21	-3	13	2571	-3.48	3.13	-0.03
251	SLU 22	-20	12	2384	-3.47	2.33	-0.03
251	SLU 23	-20	12	2383	-3.47	2.34	-0.03
251	SLU 24	-22	12	2406	-3.55	2.3	-0.03
251	SLU 25	-22	12	2405	-3.54	2.31	-0.03
251	SLU 26	-19	12	2381	-3.47	2.34	-0.03
251	SLU 27	-22	12	2404	-3.54	2.31	-0.03
251	SLU 28	-21	12	2404	-3.54	2.31	-0.03
251	SLU 29	-19	12	2381	-3.47	2.34	-0.03
251	SLU 30	-19	12	2380	-3.47	2.34	-0.03
251	SLU 31	-6	14	2755	-3.79	3.34	-0.04
251	SLU 32	-8	14	2778	-3.87	3.3	-0.04
251	SLU 33	-8	14	2777	-3.86	3.31	-0.04
251	SLU 34	-6	14	2753	-3.79	3.34	-0.04
251	SLU 35	-8	14	2776	-3.86	3.31	-0.04
251	SLU 36	-8	14	2776	-3.86	3.31	-0.04
251	SLU 37	-6	14	2753	-3.79	3.34	-0.04
251	SLU 38	-6	14	2752	-3.79	3.34	-0.04
251	SLU 39	-1	15	2916	-3.93	3.76	-0.04
251	SLU 40	0	15	2915	-3.93	3.77	-0.04
251	SLU 41	0	15	2914	-3.93	3.77	-0.04
251	SLU 42	0	15	2913	-3.93	3.77	-0.04
251	SLU 43	-31	13	2538	-3.78	1.98	-0.03
251	SLU 44	-31	13	2537	-3.77	1.99	-0.03
251	SLU 45	-33	13	2560	-3.85	1.95	-0.03
251	SLU 46	-33	13	2559	-3.84	1.95	-0.03
251	SLU 47	-31	13	2535	-3.77	1.99	-0.03
251	SLU 48	-33	13	2558	-3.84	1.95	-0.03
251	SLU 49	-33	13	2557	-3.84	1.96	-0.03
251	SLU 50	-31	13	2534	-3.77	1.99	-0.03
251	SLU 51	-30	13	2534	-3.77	1.99	-0.03
251	SLU 52	-17	14	2909	-4.09	2.99	-0.04
251	SLU 53	-20	15	2932	-4.17	2.95	-0.04
251	SLU 54	-19	15	2931	-4.17	2.96	-0.04
251	SLU 55	-17	14	2907	-4.09	2.99	-0.04
251	SLU 56	-19	15	2930	-4.17	2.96	-0.04
251	SLU 57	-19	15	2929	-4.16	2.96	-0.04
251	SLU 58	-17	14	2906	-4.09	2.99	-0.04
251	SLU 59	-17	14	2906	-4.09	2.99	-0.04
251	SLU 60	-12	15	3069	-4.23	3.41	-0.04
251	SLU 61	-12	15	3069	-4.23	3.42	-0.04
251	SLU 62	-12	15	3067	-4.23	3.42	-0.04
251	SLU 63	-11	15	3067	-4.23	3.42	-0.04
251	SLU 64	-28	15	2880	-4.23	2.62	-0.04
251	SLU 65	-28	15	2879	-4.22	2.63	-0.04
251	SLU 66	-30	15	2902	-4.3	2.59	-0.04
251	SLU 67	-30	15	2901	-4.3	2.59	-0.04
251	SLU 68	-27	15	2877	-4.22	2.63	-0.04

Nodo	Cont.	Reazione a traslazione			Reazione a rotazione		
Ind.	N.br.	x	y	z	x	y	z
251	SLU 69	-30	15	2900	-4.3	2.59	-0.04
251	SLU 70	-29	15	2899	-4.29	2.6	-0.04
251	SLU 71	-27	15	2876	-4.22	2.63	-0.04
251	SLU 72	-27	15	2876	-4.22	2.63	-0.04
251	SLU 73	-14	16	3251	-4.54	3.63	-0.04
251	SLU 74	-16	17	3274	-4.62	3.59	-0.04
251	SLU 75	-16	17	3273	-4.62	3.6	-0.04
251	SLU 76	-14	16	3249	-4.54	3.63	-0.04
251	SLU 77	-16	17	3272	-4.62	3.6	-0.04
251	SLU 78	-16	17	3271	-4.61	3.6	-0.04
251	SLU 79	-14	16	3248	-4.54	3.63	-0.04
251	SLU 80	-14	16	3248	-4.54	3.63	-0.04
251	SLU 81	-9	17	3411	-4.68	4.05	-0.04
251	SLU 82	-8	17	3410	-4.68	4.05	-0.04
251	SLU 83	-8	17	3409	-4.68	4.05	-0.04
251	SLU 84	-8	17	3409	-4.68	4.06	-0.04
251	SLE RA 1	-22	11	2140	-3.15	1.88	-0.03
251	SLE RA 2	-22	11	2139	-3.15	1.88	-0.03
251	SLE RA 3	-23	11	2155	-3.2	1.86	-0.03
251	SLE RA 4	-23	11	2154	-3.2	1.86	-0.03
251	SLE RA 5	-22	11	2138	-3.15	1.88	-0.03
251	SLE RA 6	-23	11	2153	-3.2	1.86	-0.03
251	SLE RA 7	-23	11	2153	-3.2	1.86	-0.03
251	SLE RA 8	-22	11	2138	-3.15	1.88	-0.03
251	SLE RA 9	-22	11	2137	-3.15	1.88	-0.03
251	SLE RA 10	-13	12	2387	-3.36	2.55	-0.03
251	SLE RA 11	-14	12	2403	-3.41	2.52	-0.03
251	SLE RA 12	-14	12	2402	-3.41	2.53	-0.03
251	SLE RA 13	-13	12	2386	-3.36	2.55	-0.03
251	SLE RA 14	-14	12	2401	-3.41	2.53	-0.03
251	SLE RA 15	-14	12	2401	-3.41	2.53	-0.03
251	SLE RA 16	-13	12	2386	-3.36	2.55	-0.03
251	SLE RA 17	-13	12	2385	-3.36	2.55	-0.03
251	SLE RA 18	-9	12	2494	-3.46	2.83	-0.03
251	SLE RA 19	-9	12	2494	-3.46	2.83	-0.03
251	SLE RA 20	-9	12	2493	-3.46	2.83	-0.03
251	SLE RA 21	-9	12	2493	-3.45	2.83	-0.03
251	SLE FR 1	-22	11	2140	-3.15	1.88	-0.03
251	SLE FR 2	-22	11	2140	-3.15	1.88	-0.03
251	SLE FR 3	-22	11	2140	-3.15	1.88	-0.03
251	SLE FR 4	-18	11	2246	-3.24	2.16	-0.03
251	SLE FR 5	-18	11	2246	-3.24	2.16	-0.03
251	SLE FR 6	-16	12	2317	-3.3	2.35	-0.03
251	SLE QP 1	-22	11	2140	-3.15	1.88	-0.03
251	SLE QP 2	-18	11	2246	-3.24	2.16	-0.03
251	SLD 1	531	15	2698	-7.15	25.58	-0.04
251	SLD 2	531	15	2698	-7.15	25.58	-0.04
251	SLD 3	595	4	2352	3.86	27.75	-0.01
251	SLD 4	595	4	2352	3.86	27.75	-0.01
251	SLD 5	51	29	2906	-21.12	5.9	-0.07
251	SLD 6	51	29	2906	-21.12	5.9	-0.07
251	SLD 7	262	-7	1754	15.59	13.12	0.01
251	SLD 8	262	-7	1754	15.59	13.12	0.01
251	SLD 9	-298	30	2739	-22.08	-8.8	-0.07
251	SLD 10	-298	30	2739	-22.08	-8.8	-0.07
251	SLD 11	-87	-6	1587	14.63	-1.58	0.01
251	SLD 12	-87	-6	1587	14.63	-1.58	0.01
251	SLD 13	-631	19	2141	-10.35	-23.42	-0.05
251	SLD 14	-631	19	2141	-10.35	-23.42	-0.05
251	SLD 15	-568	8	1795	0.66	-21.26	-0.02
251	SLD 16	-568	8	1795	0.66	-21.26	-0.02
251	SLV 1	1237	20	3317	-13.15	55.71	-0.05
251	SLV 2	1237	20	3317	-13.15	55.71	-0.05
251	SLV 3	1389	-7	2490	14.56	60.98	0.01
251	SLV 4	1389	-7	2490	14.56	60.98	0.01
251	SLV 5	128	55	3821	-48.23	10.23	-0.12
251	SLV 6	128	55	3821	-48.23	10.23	-0.12
251	SLV 7	634	-35	1066	44.12	27.8	0.08
251	SLV 8	634	-35	1066	44.12	27.8	0.08
251	SLV 9	-671	58	3426	-50.6	-23.48	-0.13
251	SLV 10	-671	58	3426	-50.6	-23.48	-0.13
251	SLV 11	-165	-32	672	41.75	-5.91	0.07
251	SLV 12	-165	-32	672	41.75	-5.91	0.07
251	SLV 13	-1425	29	2002	-21.04	-56.66	-0.07
251	SLV 14	-1425	29	2002	-21.04	-56.66	-0.07
251	SLV 15	-1273	2	1176	6.66	-51.39	-0.01
251	SLV 16	-1273	2	1176	6.66	-51.39	-0.01
252	SLU 1	-77	10	1903	-2.47	-4.37	-0.03
252	SLU 2	-76	10	1902	-2.47	-4.37	-0.03
252	SLU 3	-79	10	1922	-2.54	-4.5	-0.03
252	SLU 4	-79	10	1921	-2.54	-4.49	-0.03
252	SLU 5	-76	10	1901	-2.47	-4.36	-0.03
252	SLU 6	-79	10	1921	-2.54	-4.49	-0.03
252	SLU 7	-79	10	1920	-2.54	-4.48	-0.03
252	SLU 8	-76	10	1901	-2.48	-4.35	-0.03
252	SLU 9	-76	10	1900	-2.48	-4.35	-0.03
252	SLU 10	-81	11	2257	-2.63	-4.79	-0.04
252	SLU 11	-83	12	2276	-2.69	-4.93	-0.04
252	SLU 12	-83	12	2276	-2.69	-4.92	-0.04
252	SLU 13	-80	11	2256	-2.63	-4.78	-0.04
252	SLU 14	-83	12	2275	-2.7	-4.92	-0.04

Nodo	Cont.	Reazione a traslazione			Reazione a rotazione		
Ind.	N.br.	x	y	z	x	y	z
252	SLU 15	-83	12	2275	-2.69	-4.91	-0.04
252	SLU 16	-80	11	2255	-2.63	-4.78	-0.04
252	SLU 17	-80	11	2255	-2.63	-4.78	-0.04
252	SLU 18	-82	12	2410	-2.69	-4.98	-0.04
252	SLU 19	-82	12	2409	-2.69	-4.98	-0.04
252	SLU 20	-82	12	2408	-2.7	-4.97	-0.04
252	SLU 21	-82	12	2408	-2.7	-4.97	-0.04
252	SLU 22	-87	12	2222	-2.77	-5.08	-0.04
252	SLU 23	-87	12	2221	-2.76	-5.07	-0.04
252	SLU 24	-90	12	2240	-2.83	-5.21	-0.04
252	SLU 25	-90	12	2240	-2.83	-5.2	-0.04
252	SLU 26	-87	12	2220	-2.77	-5.06	-0.04
252	SLU 27	-90	12	2239	-2.84	-5.2	-0.04
252	SLU 28	-89	12	2239	-2.83	-5.19	-0.04
252	SLU 29	-87	12	2219	-2.77	-5.06	-0.04
252	SLU 30	-87	12	2219	-2.77	-5.06	-0.04
252	SLU 31	-91	13	2575	-2.92	-5.5	-0.04
252	SLU 32	-94	14	2595	-2.99	-5.63	-0.04
252	SLU 33	-94	14	2595	-2.98	-5.63	-0.04
252	SLU 34	-91	13	2574	-2.92	-5.49	-0.04
252	SLU 35	-94	14	2594	-2.99	-5.62	-0.04
252	SLU 36	-94	14	2593	-2.99	-5.62	-0.04
252	SLU 37	-91	13	2574	-2.93	-5.49	-0.04
252	SLU 38	-91	13	2573	-2.93	-5.48	-0.04
252	SLU 39	-93	14	2728	-2.99	-5.69	-0.05
252	SLU 40	-93	14	2728	-2.98	-5.69	-0.05
252	SLU 41	-93	14	2727	-2.99	-5.68	-0.05
252	SLU 42	-93	14	2727	-2.99	-5.68	-0.05
252	SLU 43	-96	12	2365	-3.12	-5.44	-0.04
252	SLU 44	-96	12	2364	-3.11	-5.44	-0.04
252	SLU 45	-98	12	2383	-3.18	-5.57	-0.04
252	SLU 46	-98	12	2383	-3.18	-5.56	-0.04
252	SLU 47	-95	12	2363	-3.12	-5.43	-0.04
252	SLU 48	-98	12	2382	-3.18	-5.56	-0.04
252	SLU 49	-98	12	2382	-3.18	-5.55	-0.04
252	SLU 50	-95	12	2362	-3.12	-5.42	-0.04
252	SLU 51	-95	12	2362	-3.12	-5.42	-0.04
252	SLU 52	-100	14	2718	-3.27	-5.86	-0.05
252	SLU 53	-102	14	2738	-3.34	-6	-0.05
252	SLU 54	-102	14	2738	-3.33	-5.99	-0.05
252	SLU 55	-100	14	2717	-3.27	-5.85	-0.05
252	SLU 56	-102	14	2737	-3.34	-5.99	-0.05
252	SLU 57	-102	14	2736	-3.34	-5.98	-0.05
252	SLU 58	-99	14	2717	-3.28	-5.85	-0.05
252	SLU 59	-99	14	2716	-3.27	-5.85	-0.05
252	SLU 60	-102	15	2871	-3.34	-6.05	-0.05
252	SLU 61	-102	15	2871	-3.33	-6.05	-0.05
252	SLU 62	-102	15	2870	-3.34	-6.04	-0.05
252	SLU 63	-101	15	2870	-3.34	-6.04	-0.05
252	SLU 64	-107	14	2683	-3.41	-6.15	-0.05
252	SLU 65	-106	14	2682	-3.41	-6.14	-0.05
252	SLU 66	-109	14	2702	-3.47	-6.28	-0.05
252	SLU 67	-109	14	2702	-3.47	-6.27	-0.05
252	SLU 68	-106	14	2681	-3.41	-6.13	-0.05
252	SLU 69	-109	14	2701	-3.48	-6.27	-0.05
252	SLU 70	-109	14	2700	-3.48	-6.26	-0.05
252	SLU 71	-106	14	2681	-3.41	-6.13	-0.05
252	SLU 72	-106	14	2680	-3.41	-6.13	-0.05
252	SLU 73	-111	16	3037	-3.56	-6.57	-0.05
252	SLU 74	-113	16	3057	-3.63	-6.7	-0.05
252	SLU 75	-113	16	3056	-3.63	-6.7	-0.05
252	SLU 76	-110	16	3036	-3.56	-6.56	-0.05
252	SLU 77	-113	16	3056	-3.63	-6.69	-0.05
252	SLU 78	-113	16	3055	-3.63	-6.69	-0.05
252	SLU 79	-110	16	3036	-3.57	-6.56	-0.05
252	SLU 80	-110	16	3035	-3.57	-6.55	-0.05
252	SLU 81	-113	16	3190	-3.63	-6.76	-0.05
252	SLU 82	-112	16	3189	-3.63	-6.76	-0.05
252	SLU 83	-112	16	3189	-3.63	-6.75	-0.05
252	SLU 84	-112	16	3188	-3.63	-6.75	-0.05
252	SLE RA 1	-80	10	1994	-2.56	-4.58	-0.03
252	SLE RA 2	-80	10	1993	-2.56	-4.57	-0.03
252	SLE RA 3	-81	11	2007	-2.6	-4.66	-0.03
252	SLE RA 4	-81	11	2006	-2.6	-4.66	-0.03
252	SLE RA 5	-79	10	1993	-2.56	-4.56	-0.03
252	SLE RA 6	-81	11	2006	-2.6	-4.65	-0.03
252	SLE RA 7	-81	11	2005	-2.6	-4.65	-0.03
252	SLE RA 8	-79	10	1992	-2.56	-4.56	-0.03
252	SLE RA 9	-79	10	1992	-2.56	-4.56	-0.03
252	SLE RA 10	-82	11	2230	-2.66	-4.86	-0.04
252	SLE RA 11	-84	12	2243	-2.7	-4.94	-0.04
252	SLE RA 12	-84	12	2243	-2.7	-4.94	-0.04
252	SLE RA 13	-82	11	2229	-2.66	-4.85	-0.04
252	SLE RA 14	-84	12	2242	-2.71	-4.94	-0.04
252	SLE RA 15	-84	12	2242	-2.7	-4.93	-0.04
252	SLE RA 16	-82	11	2229	-2.66	-4.85	-0.04
252	SLE RA 17	-82	11	2229	-2.66	-4.84	-0.04
252	SLE RA 18	-84	12	2332	-2.7	-4.98	-0.04
252	SLE RA 19	-84	12	2331	-2.7	-4.98	-0.04
252	SLE RA 20	-83	12	2331	-2.71	-4.98	-0.04
252	SLE RA 21	-83	12	2331	-2.71	-4.97	-0.04

Nodo	Cont.	Reazione a traslazione			Reazione a rotazione		
Ind.	N.br.	x	y	z	x	y	z
252	SLE FR 1	-80	10	1994	-2.56	-4.58	-0.03
252	SLE FR 2	-80	10	1994	-2.56	-4.58	-0.03
252	SLE FR 3	-80	10	1994	-2.56	-4.57	-0.03
252	SLE FR 4	-81	11	2095	-2.6	-4.7	-0.04
252	SLE FR 5	-81	11	2095	-2.6	-4.7	-0.04
252	SLE FR 6	-82	11	2163	-2.63	-4.78	-0.04
252	SLE QP 1	-80	10	1994	-2.56	-4.58	-0.03
252	SLE QP 2	-81	11	2095	-2.6	-4.7	-0.04
252	SLD 1	493	15	2399	-6.96	19.41	-0.04
252	SLD 2	493	15	2399	-6.96	19.41	-0.04
252	SLD 3	549	2	2113	6.11	22	-0.01
252	SLD 4	549	2	2113	6.11	22	-0.01
252	SLD 5	7	32	2620	-23.73	-1.39	-0.1
252	SLD 6	7	32	2620	-23.73	-1.39	-0.1
252	SLD 7	193	-12	1667	19.83	7.24	0.03
252	SLD 8	193	-12	1667	19.83	7.24	0.03
252	SLD 9	-355	34	2524	-25.04	-16.64	-0.1
252	SLD 10	-355	34	2524	-25.04	-16.64	-0.1
252	SLD 11	-168	-10	1571	18.53	-8	0.03
252	SLD 12	-168	-10	1571	18.53	-8	0.03
252	SLD 13	-711	20	2078	-11.31	-31.4	-0.06
252	SLD 14	-711	20	2078	-11.31	-31.4	-0.06
252	SLD 15	-655	7	1792	1.76	-28.81	-0.03
252	SLD 16	-655	7	1792	1.76	-28.81	-0.03
252	SLV 1	1232	21	2810	-13.8	50.45	-0.06
252	SLV 2	1232	21	2810	-13.8	50.45	-0.06
252	SLV 3	1366	-12	2125	19.24	56.67	0.03
252	SLV 4	1366	-12	2125	19.24	56.67	0.03
252	SLV 5	109	64	3348	-56.07	2.42	-0.19
252	SLV 6	109	64	3348	-56.07	2.42	-0.19
252	SLV 7	557	-46	1066	54.06	23.14	0.13
252	SLV 8	557	-46	1066	54.06	23.14	0.13
252	SLV 9	-719	68	3125	-59.26	-32.53	-0.2
252	SLV 10	-719	68	3125	-59.26	-32.53	-0.2
252	SLV 11	-271	-42	842	50.86	-11.82	0.12
252	SLV 12	-271	-42	842	50.86	-11.82	0.12
252	SLV 13	-1528	34	2066	-24.44	-66.06	-0.11
252	SLV 14	-1528	34	2066	-24.44	-66.06	-0.11
252	SLV 15	-1394	1	1381	8.6	-59.85	-0.01
252	SLV 16	-1394	1	1381	8.6	-59.85	-0.01
253	SLU 1	-41	8	1804	-1.46	0.4	-0.03
253	SLU 2	-41	8	1803	-1.46	0.4	-0.03
253	SLU 3	-42	8	1821	-1.51	0.4	-0.03
253	SLU 4	-42	8	1820	-1.51	0.4	-0.03
253	SLU 5	-41	8	1802	-1.47	0.4	-0.03
253	SLU 6	-42	8	1820	-1.52	0.4	-0.03
253	SLU 7	-42	8	1819	-1.52	0.4	-0.03
253	SLU 8	-41	8	1802	-1.48	0.4	-0.03
253	SLU 9	-41	8	1802	-1.48	0.4	-0.03
253	SLU 10	-46	10	2143	-1.38	0.57	-0.04
253	SLU 11	-48	10	2160	-1.43	0.57	-0.04
253	SLU 12	-48	10	2160	-1.42	0.57	-0.04
253	SLU 13	-46	10	2142	-1.38	0.57	-0.04
253	SLU 14	-48	10	2160	-1.43	0.57	-0.04
253	SLU 15	-48	10	2159	-1.43	0.57	-0.04
253	SLU 16	-46	10	2142	-1.39	0.57	-0.04
253	SLU 17	-46	10	2142	-1.39	0.57	-0.04
253	SLU 18	-49	10	2289	-1.34	0.64	-0.04
253	SLU 19	-49	10	2289	-1.34	0.64	-0.04
253	SLU 20	-49	10	2289	-1.35	0.64	-0.04
253	SLU 21	-49	10	2288	-1.35	0.64	-0.04
253	SLU 22	-49	10	2104	-1.52	0.52	-0.04
253	SLU 23	-48	10	2103	-1.51	0.52	-0.04
253	SLU 24	-50	10	2121	-1.56	0.51	-0.04
253	SLU 25	-50	10	2121	-1.56	0.51	-0.04
253	SLU 26	-48	10	2103	-1.52	0.52	-0.04
253	SLU 27	-50	10	2120	-1.57	0.51	-0.04
253	SLU 28	-50	10	2120	-1.57	0.51	-0.04
253	SLU 29	-48	10	2103	-1.53	0.51	-0.04
253	SLU 30	-48	10	2102	-1.53	0.52	-0.04
253	SLU 31	-54	11	2443	-1.43	0.69	-0.04
253	SLU 32	-55	11	2461	-1.48	0.68	-0.04
253	SLU 33	-55	11	2461	-1.48	0.68	-0.04
253	SLU 34	-54	11	2443	-1.43	0.69	-0.04
253	SLU 35	-55	11	2460	-1.49	0.68	-0.04
253	SLU 36	-55	11	2460	-1.48	0.68	-0.04
253	SLU 37	-54	11	2443	-1.44	0.68	-0.04
253	SLU 38	-54	11	2442	-1.44	0.68	-0.04
253	SLU 39	-56	12	2590	-1.39	0.76	-0.05
253	SLU 40	-56	12	2589	-1.39	0.76	-0.05
253	SLU 41	-56	12	2589	-1.4	0.76	-0.05
253	SLU 42	-56	12	2589	-1.4	0.76	-0.05
253	SLU 43	-51	10	2242	-1.89	0.48	-0.04
253	SLU 44	-51	10	2241	-1.88	0.48	-0.04
253	SLU 45	-52	10	2259	-1.94	0.48	-0.04
253	SLU 46	-52	10	2258	-1.93	0.48	-0.04
253	SLU 47	-51	10	2240	-1.89	0.48	-0.04
253	SLU 48	-52	10	2258	-1.94	0.48	-0.04
253	SLU 49	-52	10	2257	-1.94	0.48	-0.04
253	SLU 50	-51	10	2240	-1.9	0.48	-0.04
253	SLU 51	-51	10	2240	-1.9	0.48	-0.04

Nodo	Cont.	Reazione a traslazione			Reazione a rotazione		
Ind.	N.br.	x	y	z	x	y	z
253	SLU 52	-56	12	2581	-1.8	0.65	-0.05
253	SLU 53	-57	12	2598	-1.85	0.65	-0.05
253	SLU 54	-57	12	2598	-1.85	0.65	-0.05
253	SLU 55	-56	12	2580	-1.81	0.65	-0.05
253	SLU 56	-57	12	2598	-1.86	0.65	-0.05
253	SLU 57	-57	12	2597	-1.85	0.65	-0.05
253	SLU 58	-56	12	2580	-1.81	0.65	-0.05
253	SLU 59	-56	12	2580	-1.81	0.65	-0.05
253	SLU 60	-59	12	2727	-1.76	0.72	-0.05
253	SLU 61	-59	12	2727	-1.76	0.72	-0.05
253	SLU 62	-59	12	2727	-1.77	0.72	-0.05
253	SLU 63	-59	12	2726	-1.77	0.72	-0.05
253	SLU 64	-58	12	2542	-1.94	0.6	-0.05
253	SLU 65	-58	12	2541	-1.94	0.6	-0.05
253	SLU 66	-59	12	2559	-1.99	0.59	-0.05
253	SLU 67	-59	12	2559	-1.99	0.6	-0.05
253	SLU 68	-58	12	2541	-1.94	0.6	-0.05
253	SLU 69	-59	12	2558	-1.99	0.59	-0.05
253	SLU 70	-59	12	2558	-1.99	0.59	-0.05
253	SLU 71	-58	12	2541	-1.95	0.6	-0.05
253	SLU 72	-58	12	2540	-1.95	0.6	-0.05
253	SLU 73	-64	13	2881	-1.85	0.77	-0.05
253	SLU 74	-65	13	2899	-1.9	0.76	-0.05
253	SLU 75	-65	13	2899	-1.9	0.76	-0.05
253	SLU 76	-64	13	2881	-1.86	0.77	-0.05
253	SLU 77	-65	13	2898	-1.91	0.76	-0.05
253	SLU 78	-65	13	2898	-1.91	0.76	-0.05
253	SLU 79	-64	13	2881	-1.87	0.76	-0.05
253	SLU 80	-64	13	2880	-1.87	0.76	-0.05
253	SLU 81	-66	14	3028	-1.81	0.84	-0.05
253	SLU 82	-66	14	3027	-1.81	0.84	-0.05
253	SLU 83	-66	14	3027	-1.82	0.84	-0.05
253	SLU 84	-66	14	3027	-1.82	0.84	-0.05
253	SLE RA 1	-43	9	1889	-1.48	0.44	-0.03
253	SLE RA 2	-43	9	1889	-1.48	0.44	-0.03
253	SLE RA 3	-44	9	1901	-1.51	0.43	-0.03
253	SLE RA 4	-44	9	1900	-1.51	0.43	-0.03
253	SLE RA 5	-43	9	1889	-1.48	0.43	-0.03
253	SLE RA 6	-44	9	1900	-1.52	0.43	-0.03
253	SLE RA 7	-44	9	1900	-1.52	0.43	-0.03
253	SLE RA 8	-43	9	1889	-1.49	0.43	-0.03
253	SLE RA 9	-43	9	1888	-1.49	0.43	-0.03
253	SLE RA 10	-47	10	2116	-1.42	0.55	-0.04
253	SLE RA 11	-48	10	2127	-1.45	0.54	-0.04
253	SLE RA 12	-48	10	2127	-1.45	0.55	-0.04
253	SLE RA 13	-47	10	2115	-1.43	0.55	-0.04
253	SLE RA 14	-48	10	2127	-1.46	0.54	-0.04
253	SLE RA 15	-48	10	2127	-1.46	0.54	-0.04
253	SLE RA 16	-47	10	2115	-1.43	0.55	-0.04
253	SLE RA 17	-47	10	2115	-1.43	0.55	-0.04
253	SLE RA 18	-48	10	2213	-1.4	0.6	-0.04
253	SLE RA 19	-48	10	2213	-1.4	0.6	-0.04
253	SLE RA 20	-48	10	2213	-1.4	0.59	-0.04
253	SLE RA 21	-48	10	2212	-1.4	0.6	-0.04
253	SLE FR 1	-43	9	1889	-1.48	0.44	-0.03
253	SLE FR 2	-43	9	1889	-1.48	0.44	-0.03
253	SLE FR 3	-43	9	1889	-1.48	0.43	-0.03
253	SLE FR 4	-45	9	1986	-1.45	0.48	-0.04
253	SLE FR 5	-45	9	1986	-1.46	0.48	-0.04
253	SLE FR 6	-46	9	2051	-1.44	0.52	-0.04
253	SLE QP 1	-43	9	1889	-1.48	0.44	-0.03
253	SLE QP 2	-45	9	1987	-1.45	0.48	-0.04
253	SLD 1	553	13	2004	-5.92	27.23	-0.05
253	SLD 2	553	13	2004	-5.92	27.23	-0.05
253	SLD 3	594	-2	1745	8.37	25.39	0
253	SLD 4	594	-2	1745	8.37	25.39	0
253	SLD 5	73	32	2385	-24.46	11.29	-0.12
253	SLD 6	73	32	2385	-24.46	11.29	-0.12
253	SLD 7	209	-16	1521	23.16	5.17	0.05
253	SLD 8	209	-16	1521	23.16	5.17	0.05
253	SLD 9	-298	34	2452	-26.07	-4.2	-0.12
253	SLD 10	-298	34	2452	-26.07	-4.2	-0.12
253	SLD 11	-162	-14	1588	21.56	-10.33	0.04
253	SLD 12	-162	-14	1588	21.56	-10.33	0.04
253	SLD 13	-684	20	2228	-11.28	-24.43	-0.08
253	SLD 14	-684	20	2228	-11.28	-24.43	-0.08
253	SLD 15	-643	5	1969	3.01	-26.26	-0.02
253	SLD 16	-643	5	1969	3.01	-26.26	-0.02
253	SLV 1	1324	19	2042	-13.08	62.02	-0.07
253	SLV 2	1324	19	2042	-13.08	62.02	-0.07
253	SLV 3	1424	-18	1420	23.16	57.53	0.06
253	SLV 4	1424	-18	1420	23.16	57.53	0.06
253	SLV 5	215	67	2947	-59.91	25.76	-0.24
253	SLV 6	215	67	2947	-59.91	25.76	-0.24
253	SLV 7	547	-54	873	60.9	10.78	0.19
253	SLV 8	547	-54	873	60.9	10.78	0.19
253	SLV 9	-637	72	3100	-63.8	-9.81	-0.26
253	SLV 10	-637	72	3100	-63.8	-9.81	-0.26
253	SLV 11	-304	-49	1026	57	-24.8	0.16
253	SLV 12	-304	-49	1026	57	-24.8	0.16
253	SLV 13	-1514	36	2553	-26.07	-56.56	-0.13

Nodo	Cont.	Reazione a traslazione			Reazione a rotazione		
Ind.	N.br.	x	y	z	x	y	z
253	SLV 14	-1514	36	2553	-26.07	-56.56	-0.13
253	SLV 15	-1414	0	1931	10.17	-61.05	-0.01
253	SLV 16	-1414	0	1931	10.17	-61.05	-0.01
254	SLU 1	-63	6	1749	-0.42	-4.29	-0.03
254	SLU 2	-63	6	1748	-0.42	-4.29	-0.03
254	SLU 3	-64	7	1765	-0.45	-4.36	-0.03
254	SLU 4	-64	7	1765	-0.45	-4.36	-0.03
254	SLU 5	-63	6	1748	-0.43	-4.28	-0.03
254	SLU 6	-64	7	1765	-0.46	-4.36	-0.03
254	SLU 7	-64	7	1765	-0.46	-4.36	-0.03
254	SLU 8	-63	6	1749	-0.44	-4.28	-0.03
254	SLU 9	-63	6	1748	-0.44	-4.28	-0.03
254	SLU 10	-80	7	2078	-0.1	-5.31	-0.03
254	SLU 11	-81	7	2094	-0.13	-5.39	-0.03
254	SLU 12	-81	7	2094	-0.13	-5.39	-0.03
254	SLU 13	-80	7	2077	-0.11	-5.31	-0.03
254	SLU 14	-81	7	2094	-0.14	-5.39	-0.03
254	SLU 15	-81	7	2094	-0.14	-5.39	-0.03
254	SLU 16	-80	7	2078	-0.12	-5.31	-0.03
254	SLU 17	-80	7	2077	-0.12	-5.31	-0.03
254	SLU 18	-87	8	2219	0.03	-5.75	-0.03
254	SLU 19	-87	8	2219	0.03	-5.75	-0.03
254	SLU 20	-87	8	2219	0.02	-5.75	-0.03
254	SLU 21	-87	8	2219	0.02	-5.75	-0.03
254	SLU 22	-78	7	2038	-0.24	-5.26	-0.03
254	SLU 23	-78	7	2038	-0.24	-5.26	-0.03
254	SLU 24	-79	8	2055	-0.27	-5.34	-0.03
254	SLU 25	-79	8	2054	-0.27	-5.34	-0.03
254	SLU 26	-78	7	2037	-0.25	-5.26	-0.03
254	SLU 27	-79	8	2054	-0.28	-5.34	-0.03
254	SLU 28	-79	8	2054	-0.28	-5.34	-0.03
254	SLU 29	-78	7	2038	-0.26	-5.26	-0.03
254	SLU 30	-78	7	2037	-0.26	-5.26	-0.03
254	SLU 31	-95	8	2367	0.08	-6.29	-0.04
254	SLU 32	-96	8	2384	0.05	-6.37	-0.04
254	SLU 33	-96	8	2383	0.05	-6.36	-0.04
254	SLU 34	-95	8	2366	0.07	-6.29	-0.04
254	SLU 35	-96	8	2383	0.04	-6.36	-0.04
254	SLU 36	-96	8	2383	0.04	-6.36	-0.04
254	SLU 37	-95	8	2367	0.06	-6.29	-0.04
254	SLU 38	-95	8	2366	0.06	-6.29	-0.04
254	SLU 39	-103	9	2508	0.22	-6.73	-0.04
254	SLU 40	-103	9	2508	0.22	-6.73	-0.04
254	SLU 41	-103	9	2508	0.21	-6.73	-0.04
254	SLU 42	-103	9	2508	0.21	-6.73	-0.04
254	SLU 43	-76	8	2175	-0.61	-5.24	-0.03
254	SLU 44	-76	8	2174	-0.61	-5.24	-0.03
254	SLU 45	-77	8	2191	-0.64	-5.31	-0.04
254	SLU 46	-77	8	2191	-0.64	-5.31	-0.04
254	SLU 47	-76	8	2174	-0.62	-5.24	-0.03
254	SLU 48	-77	8	2191	-0.65	-5.31	-0.04
254	SLU 49	-77	8	2190	-0.65	-5.31	-0.04
254	SLU 50	-76	8	2174	-0.63	-5.24	-0.03
254	SLU 51	-76	8	2174	-0.63	-5.24	-0.03
254	SLU 52	-94	9	2503	-0.29	-6.26	-0.04
254	SLU 53	-94	9	2520	-0.32	-6.34	-0.04
254	SLU 54	-94	9	2520	-0.32	-6.34	-0.04
254	SLU 55	-94	9	2503	-0.3	-6.26	-0.04
254	SLU 56	-94	9	2520	-0.33	-6.34	-0.04
254	SLU 57	-94	9	2519	-0.33	-6.34	-0.04
254	SLU 58	-94	9	2503	-0.31	-6.26	-0.04
254	SLU 59	-93	9	2503	-0.31	-6.26	-0.04
254	SLU 60	-101	9	2645	-0.15	-6.71	-0.04
254	SLU 61	-101	9	2644	-0.15	-6.7	-0.04
254	SLU 62	-101	9	2645	-0.17	-6.7	-0.04
254	SLU 63	-101	9	2644	-0.17	-6.7	-0.04
254	SLU 64	-92	9	2464	-0.42	-6.22	-0.04
254	SLU 65	-92	9	2463	-0.42	-6.21	-0.04
254	SLU 66	-93	9	2480	-0.45	-6.29	-0.04
254	SLU 67	-93	9	2480	-0.45	-6.29	-0.04
254	SLU 68	-92	9	2463	-0.44	-6.21	-0.04
254	SLU 69	-93	9	2480	-0.47	-6.29	-0.04
254	SLU 70	-93	9	2479	-0.47	-6.29	-0.04
254	SLU 71	-92	9	2463	-0.45	-6.21	-0.04
254	SLU 72	-92	9	2463	-0.45	-6.21	-0.04
254	SLU 73	-109	10	2792	-0.11	-7.24	-0.04
254	SLU 74	-110	10	2809	-0.14	-7.32	-0.04
254	SLU 75	-110	10	2809	-0.14	-7.32	-0.04
254	SLU 76	-109	10	2792	-0.12	-7.24	-0.04
254	SLU 77	-110	10	2809	-0.15	-7.32	-0.04
254	SLU 78	-110	10	2809	-0.15	-7.31	-0.04
254	SLU 79	-109	10	2792	-0.13	-7.24	-0.04
254	SLU 80	-109	10	2792	-0.13	-7.24	-0.04
254	SLU 81	-116	10	2934	0.03	-7.68	-0.05
254	SLU 82	-116	10	2934	0.03	-7.68	-0.05
254	SLU 83	-116	10	2934	0.02	-7.68	-0.05
254	SLU 84	-116	10	2933	0.02	-7.68	-0.05
254	SLE RA 1	-67	7	1832	-0.37	-4.57	-0.03
254	SLE RA 2	-67	7	1831	-0.37	-4.57	-0.03
254	SLE RA 3	-68	7	1843	-0.39	-4.62	-0.03
254	SLE RA 4	-68	7	1842	-0.39	-4.62	-0.03

Nodo	Cont.	Reazione a traslazione			Reazione a rotazione		
Ind.	N.br.	x	y	z	x	y	z
254	SLE RA 5	-67	7	1831	-0.37	-4.56	-0.03
254	SLE RA 6	-68	7	1842	-0.39	-4.62	-0.03
254	SLE RA 7	-68	7	1842	-0.39	-4.62	-0.03
254	SLE RA 8	-67	7	1831	-0.38	-4.56	-0.03
254	SLE RA 9	-67	7	1831	-0.38	-4.56	-0.03
254	SLE RA 10	-79	7	2051	-0.15	-5.25	-0.03
254	SLE RA 11	-79	7	2062	-0.18	-5.3	-0.03
254	SLE RA 12	-79	7	2062	-0.17	-5.3	-0.03
254	SLE RA 13	-79	7	2051	-0.16	-5.25	-0.03
254	SLE RA 14	-79	7	2062	-0.18	-5.3	-0.03
254	SLE RA 15	-79	7	2062	-0.18	-5.3	-0.03
254	SLE RA 16	-79	7	2051	-0.17	-5.25	-0.03
254	SLE RA 17	-79	7	2050	-0.17	-5.25	-0.03
254	SLE RA 18	-84	8	2145	-0.06	-5.54	-0.03
254	SLE RA 19	-84	8	2145	-0.06	-5.54	-0.03
254	SLE RA 20	-84	8	2145	-0.07	-5.54	-0.03
254	SLE RA 21	-84	8	2145	-0.07	-5.54	-0.03
254	SLE FR 1	-67	7	1832	-0.37	-4.57	-0.03
254	SLE FR 2	-67	7	1832	-0.37	-4.57	-0.03
254	SLE FR 3	-67	7	1832	-0.37	-4.57	-0.03
254	SLE FR 4	-72	7	1926	-0.28	-4.86	-0.03
254	SLE FR 5	-72	7	1926	-0.28	-4.86	-0.03
254	SLE FR 6	-75	7	1989	-0.22	-5.06	-0.03
254	SLE QP 1	-67	7	1832	-0.37	-4.57	-0.03
254	SLE QP 2	-72	7	1926	-0.28	-4.86	-0.03
254	SLD 1	581	10	1921	-4.58	21.09	-0.04
254	SLD 2	581	10	1921	-4.58	21.09	-0.04
254	SLD 3	544	-5	1659	9.91	22.73	0.02
254	SLD 4	544	-5	1659	9.91	22.73	0.02
254	SLD 5	180	30	2321	-23.54	0.44	-0.12
254	SLD 6	180	30	2321	-23.54	0.44	-0.12
254	SLD 7	57	-19	1449	24.75	5.9	0.07
254	SLD 8	57	-19	1449	24.75	5.9	0.07
254	SLD 9	-201	33	2403	-25.31	-15.62	-0.13
254	SLD 10	-201	33	2403	-25.31	-15.62	-0.13
254	SLD 11	-324	-16	1530	22.99	-10.16	0.06
254	SLD 12	-324	-16	1530	22.99	-10.16	0.06
254	SLD 13	-689	18	2193	-10.46	-32.45	-0.08
254	SLD 14	-689	18	2193	-10.46	-32.45	-0.08
254	SLD 15	-726	4	1931	4.03	-30.81	-0.02
254	SLD 16	-726	4	1931	4.03	-30.81	-0.02
254	SLV 1	1430	16	1922	-11.61	54.64	-0.07
254	SLV 2	1430	16	1922	-11.61	54.64	-0.07
254	SLV 3	1340	-22	1293	25.22	58.62	0.08
254	SLV 4	1340	-22	1293	25.22	58.62	0.08
254	SLV 5	515	66	2878	-59.54	6.96	-0.27
254	SLV 6	515	66	2878	-59.54	6.96	-0.27
254	SLV 7	215	-58	782	63.23	20.22	0.23
254	SLV 8	215	-58	782	63.23	20.22	0.23
254	SLV 9	-359	72	3070	-63.79	-29.94	-0.29
254	SLV 10	-359	72	3070	-63.79	-29.94	-0.29
254	SLV 11	-660	-52	973	58.99	-16.68	0.21
254	SLV 12	-660	-52	973	58.99	-16.68	0.21
254	SLV 13	-1485	36	2559	-25.77	-68.34	-0.15
254	SLV 14	-1485	36	2559	-25.77	-68.34	-0.15
254	SLV 15	-1575	-2	1930	11.06	-64.36	0
254	SLV 16	-1575	-2	1930	11.06	-64.36	0
255	SLU 1	0	5	1761	0.3	1.62	-0.02
255	SLU 2	0	5	1760	0.3	1.61	-0.02
255	SLU 3	1	5	1778	0.29	1.69	-0.02
255	SLU 4	1	5	1778	0.29	1.69	-0.02
255	SLU 5	0	5	1760	0.29	1.6	-0.02
255	SLU 6	1	5	1778	0.27	1.68	-0.02
255	SLU 7	1	5	1778	0.27	1.68	-0.02
255	SLU 8	0	5	1761	0.28	1.6	-0.02
255	SLU 9	0	5	1761	0.28	1.6	-0.02
255	SLU 10	-12	5	2087	0.76	1.45	-0.02
255	SLU 11	-11	6	2105	0.74	1.53	-0.02
255	SLU 12	-11	6	2104	0.74	1.52	-0.02
255	SLU 13	-12	5	2087	0.75	1.44	-0.02
255	SLU 14	-11	6	2105	0.73	1.52	-0.02
255	SLU 15	-11	6	2104	0.73	1.52	-0.02
255	SLU 16	-12	5	2088	0.73	1.44	-0.02
255	SLU 17	-12	5	2087	0.73	1.44	-0.02
255	SLU 18	-17	6	2228	0.95	1.38	-0.03
255	SLU 19	-17	6	2227	0.95	1.38	-0.03
255	SLU 20	-17	6	2228	0.94	1.38	-0.03
255	SLU 21	-17	6	2227	0.94	1.37	-0.03
255	SLU 22	-6	6	2050	0.63	1.73	-0.02
255	SLU 23	-6	6	2049	0.63	1.72	-0.02
255	SLU 24	-5	6	2067	0.62	1.8	-0.03
255	SLU 25	-5	6	2067	0.62	1.79	-0.03
255	SLU 26	-6	6	2049	0.62	1.71	-0.02
255	SLU 27	-5	6	2067	0.6	1.79	-0.03
255	SLU 28	-5	6	2067	0.6	1.79	-0.03
255	SLU 29	-6	6	2050	0.61	1.71	-0.02
255	SLU 30	-6	6	2049	0.61	1.71	-0.02
255	SLU 31	-18	6	2376	1.09	1.56	-0.03
255	SLU 32	-17	6	2394	1.07	1.63	-0.03
255	SLU 33	-17	6	2393	1.07	1.63	-0.03
255	SLU 34	-18	6	2376	1.08	1.55	-0.03

Nodo	Cont.	Reazione a traslazione			Reazione a rotazione		
Ind.	N.br.	x	y	z	x	y	z
255	SLU 35	-17	6	2394	1.06	1.63	-0.03
255	SLU 36	-17	6	2393	1.06	1.62	-0.03
255	SLU 37	-18	6	2377	1.06	1.55	-0.03
255	SLU 38	-18	6	2376	1.06	1.54	-0.03
255	SLU 39	-23	6	2517	1.29	1.49	-0.03
255	SLU 40	-23	6	2516	1.28	1.49	-0.03
255	SLU 41	-23	6	2517	1.27	1.48	-0.03
255	SLU 42	-23	6	2516	1.27	1.48	-0.03
255	SLU 43	2	6	2190	0.28	2.06	-0.03
255	SLU 44	2	6	2190	0.28	2.06	-0.03
255	SLU 45	3	6	2207	0.26	2.14	-0.03
255	SLU 46	3	6	2207	0.26	2.13	-0.03
255	SLU 47	2	6	2190	0.27	2.05	-0.03
255	SLU 48	3	6	2207	0.25	2.13	-0.03
255	SLU 49	3	6	2207	0.25	2.13	-0.03
255	SLU 50	2	6	2190	0.25	2.05	-0.03
255	SLU 51	2	6	2190	0.25	2.05	-0.03
255	SLU 52	-10	7	2516	0.74	1.9	-0.03
255	SLU 53	-9	7	2534	0.72	1.97	-0.03
255	SLU 54	-9	7	2534	0.72	1.97	-0.03
255	SLU 55	-10	7	2516	0.72	1.89	-0.03
255	SLU 56	-9	7	2534	0.71	1.97	-0.03
255	SLU 57	-9	7	2534	0.71	1.96	-0.03
255	SLU 58	-10	7	2517	0.71	1.89	-0.03
255	SLU 59	-10	7	2516	0.71	1.88	-0.03
255	SLU 60	-15	7	2657	0.93	1.83	-0.03
255	SLU 61	-15	7	2656	0.93	1.83	-0.03
255	SLU 62	-15	7	2657	0.92	1.82	-0.03
255	SLU 63	-15	7	2656	0.92	1.82	-0.03
255	SLU 64	-4	7	2479	0.61	2.17	-0.03
255	SLU 65	-4	7	2478	0.61	2.17	-0.03
255	SLU 66	-3	7	2496	0.59	2.25	-0.03
255	SLU 67	-3	7	2496	0.59	2.24	-0.03
255	SLU 68	-4	7	2478	0.6	2.16	-0.03
255	SLU 69	-3	7	2496	0.58	2.24	-0.03
255	SLU 70	-3	7	2496	0.58	2.24	-0.03
255	SLU 71	-4	7	2479	0.58	2.16	-0.03
255	SLU 72	-4	7	2479	0.58	2.16	-0.03
255	SLU 73	-16	7	2805	1.07	2	-0.03
255	SLU 74	-15	8	2823	1.05	2.08	-0.03
255	SLU 75	-15	8	2822	1.05	2.08	-0.03
255	SLU 76	-16	7	2805	1.05	2	-0.03
255	SLU 77	-15	8	2823	1.04	2.08	-0.03
255	SLU 78	-15	8	2822	1.04	2.07	-0.03
255	SLU 79	-16	7	2806	1.04	2	-0.03
255	SLU 80	-16	7	2805	1.04	1.99	-0.03
255	SLU 81	-21	8	2946	1.26	1.94	-0.03
255	SLU 82	-21	8	2945	1.26	1.94	-0.03
255	SLU 83	-21	8	2946	1.25	1.93	-0.03
255	SLU 84	-21	8	2945	1.25	1.93	-0.03
255	SLE RA 1	-1	5	1844	0.4	1.65	-0.02
255	SLE RA 2	-2	5	1843	0.4	1.64	-0.02
255	SLE RA 3	-1	5	1855	0.39	1.7	-0.02
255	SLE RA 4	-1	5	1855	0.38	1.69	-0.02
255	SLE RA 5	-2	5	1843	0.39	1.64	-0.02
255	SLE RA 6	-1	5	1855	0.38	1.69	-0.02
255	SLE RA 7	-1	5	1855	0.38	1.69	-0.02
255	SLE RA 8	-2	5	1844	0.38	1.64	-0.02
255	SLE RA 9	-2	5	1843	0.38	1.64	-0.02
255	SLE RA 10	-10	5	2061	0.7	1.54	-0.02
255	SLE RA 11	-9	6	2073	0.69	1.59	-0.02
255	SLE RA 12	-9	6	2072	0.69	1.59	-0.02
255	SLE RA 13	-10	5	2061	0.69	1.53	-0.02
255	SLE RA 14	-9	6	2073	0.68	1.58	-0.02
255	SLE RA 15	-9	6	2072	0.68	1.58	-0.02
255	SLE RA 16	-10	6	2061	0.68	1.53	-0.02
255	SLE RA 17	-10	6	2061	0.68	1.53	-0.02
255	SLE RA 18	-13	6	2155	0.83	1.49	-0.02
255	SLE RA 19	-13	6	2154	0.83	1.49	-0.02
255	SLE RA 20	-13	6	2155	0.82	1.49	-0.02
255	SLE RA 21	-13	6	2154	0.82	1.49	-0.02
255	SLE FR 1	-1	5	1844	0.4	1.65	-0.02
255	SLE FR 2	-1	5	1844	0.4	1.65	-0.02
255	SLE FR 3	-1	5	1844	0.39	1.65	-0.02
255	SLE FR 4	-5	5	1937	0.53	1.6	-0.02
255	SLE FR 5	-5	5	1937	0.52	1.6	-0.02
255	SLE FR 6	-7	5	1999	0.61	1.57	-0.02
255	SLE QP 1	-1	5	1844	0.4	1.65	-0.02
255	SLE QP 2	-5	5	1937	0.53	1.6	-0.02
255	SLD 1	655	8	1885	-3.42	29.17	-0.04
255	SLD 2	655	8	1885	-3.42	29.17	-0.04
255	SLD 3	605	-6	1591	10.12	26.75	0.02
255	SLD 4	605	-6	1591	10.12	26.75	0.02
255	SLD 5	269	27	2367	-21.2	13.54	-0.12
255	SLD 6	269	27	2367	-21.2	13.54	-0.12
255	SLD 7	102	-19	1388	23.95	5.48	0.08
255	SLD 8	102	-19	1388	23.95	5.48	0.08
255	SLD 9	-112	29	2486	-22.89	-2.28	-0.13
255	SLD 10	-112	29	2486	-22.89	-2.28	-0.13
255	SLD 11	-279	-16	1507	22.25	-10.33	0.07
255	SLD 12	-279	-16	1507	22.25	-10.33	0.07

Nodo	Cont.	Reazione a traslazione			Reazione a rotazione		
Ind.	N.br.	x	y	z	x	y	z
255	SLD 13	-615	16	2282	-9.07	-23.55	-0.07
255	SLD 14	-615	16	2282	-9.07	-23.55	-0.07
255	SLD 15	-665	2	1989	4.47	-25.97	-0.01
255	SLD 16	-665	2	1989	4.47	-25.97	-0.01
255	SLV 1	1512	13	1818	-9.93	64.99	-0.06
255	SLV 2	1512	13	1818	-9.93	64.99	-0.06
255	SLV 3	1391	-22	1112	24.54	59.19	0.09
255	SLV 4	1391	-22	1112	24.54	59.19	0.09
255	SLV 5	633	60	2972	-54.88	29.41	-0.27
255	SLV 6	633	60	2972	-54.88	29.41	-0.27
255	SLV 7	231	-55	618	60	10.08	0.24
255	SLV 8	231	-55	618	60	10.08	0.24
255	SLV 9	-241	66	3255	-58.95	-6.88	-0.29
255	SLV 10	-241	66	3255	-58.95	-6.88	-0.29
255	SLV 11	-643	-50	902	55.93	-26.21	0.22
255	SLV 12	-643	-50	902	55.93	-26.21	0.22
255	SLV 13	-1401	32	2762	-23.49	-55.99	-0.14
255	SLV 14	-1401	32	2762	-23.49	-55.99	-0.14
255	SLV 15	-1521	-3	2056	10.98	-61.79	0.01
255	SLV 16	-1521	-3	2056	10.98	-61.79	0.01
256	SLU 1	-10	4	1841	0.56	-3.05	-0.02
256	SLU 2	-10	4	1840	0.55	-3.06	-0.02
256	SLU 3	-9	4	1861	0.55	-3.05	-0.02
256	SLU 4	-9	4	1860	0.55	-3.05	-0.02
256	SLU 5	-11	4	1840	0.55	-3.06	-0.02
256	SLU 6	-9	4	1861	0.54	-3.06	-0.02
256	SLU 7	-9	4	1860	0.54	-3.06	-0.02
256	SLU 8	-11	4	1842	0.54	-3.06	-0.02
256	SLU 9	-11	4	1841	0.54	-3.07	-0.02
256	SLU 10	-31	5	2174	1.02	-4.36	-0.02
256	SLU 11	-29	5	2194	1.02	-4.36	-0.02
256	SLU 12	-29	5	2194	1.02	-4.36	-0.02
256	SLU 13	-31	5	2174	1.01	-4.37	-0.02
256	SLU 14	-29	5	2195	1.01	-4.36	-0.02
256	SLU 15	-29	5	2194	1.01	-4.36	-0.02
256	SLU 16	-31	5	2175	1.01	-4.37	-0.02
256	SLU 17	-31	5	2174	1	-4.37	-0.02
256	SLU 18	-39	5	2318	1.23	-4.91	-0.02
256	SLU 19	-39	5	2317	1.22	-4.92	-0.02
256	SLU 20	-39	5	2318	1.22	-4.92	-0.02
256	SLU 21	-39	5	2317	1.22	-4.92	-0.02
256	SLU 22	-20	5	2142	0.91	-3.99	-0.02
256	SLU 23	-21	5	2141	0.91	-3.99	-0.02
256	SLU 24	-19	5	2161	0.9	-3.99	-0.02
256	SLU 25	-19	5	2161	0.9	-3.99	-0.02
256	SLU 26	-21	5	2141	0.9	-4	-0.02
256	SLU 27	-19	5	2162	0.89	-4	-0.02
256	SLU 28	-19	5	2161	0.89	-4	-0.02
256	SLU 29	-21	5	2142	0.89	-4	-0.02
256	SLU 30	-21	5	2142	0.89	-4	-0.02
256	SLU 31	-41	5	2474	1.38	-5.3	-0.02
256	SLU 32	-39	5	2495	1.37	-5.29	-0.02
256	SLU 33	-39	5	2494	1.37	-5.3	-0.02
256	SLU 34	-41	5	2475	1.37	-5.3	-0.02
256	SLU 35	-39	5	2495	1.36	-5.3	-0.02
256	SLU 36	-39	5	2495	1.36	-5.3	-0.02
256	SLU 37	-41	5	2476	1.36	-5.31	-0.02
256	SLU 38	-41	5	2475	1.36	-5.31	-0.02
256	SLU 39	-49	5	2618	1.58	-5.85	-0.02
256	SLU 40	-49	5	2618	1.58	-5.86	-0.02
256	SLU 41	-49	5	2618	1.57	-5.86	-0.02
256	SLU 42	-50	5	2618	1.57	-5.86	-0.02
256	SLU 43	-10	5	2291	0.6	-3.65	-0.02
256	SLU 44	-10	5	2290	0.6	-3.65	-0.02
256	SLU 45	-8	5	2310	0.59	-3.64	-0.02
256	SLU 46	-8	5	2310	0.59	-3.65	-0.02
256	SLU 47	-10	5	2290	0.59	-3.66	-0.02
256	SLU 48	-8	5	2310	0.58	-3.65	-0.02
256	SLU 49	-9	5	2310	0.58	-3.65	-0.02
256	SLU 50	-10	5	2291	0.58	-3.66	-0.02
256	SLU 51	-10	5	2290	0.58	-3.66	-0.02
256	SLU 52	-30	6	2623	1.07	-4.95	-0.02
256	SLU 53	-29	6	2644	1.06	-4.95	-0.02
256	SLU 54	-29	6	2643	1.06	-4.95	-0.02
256	SLU 55	-30	6	2623	1.06	-4.96	-0.02
256	SLU 56	-29	6	2644	1.05	-4.96	-0.02
256	SLU 57	-29	6	2643	1.05	-4.96	-0.02
256	SLU 58	-30	6	2624	1.05	-4.96	-0.02
256	SLU 59	-30	6	2624	1.05	-4.96	-0.02
256	SLU 60	-39	6	2767	1.27	-5.51	-0.02
256	SLU 61	-39	6	2766	1.27	-5.51	-0.02
256	SLU 62	-39	6	2767	1.26	-5.51	-0.02
256	SLU 63	-39	6	2767	1.26	-5.52	-0.02
256	SLU 64	-20	6	2591	0.96	-4.58	-0.02
256	SLU 65	-20	6	2590	0.95	-4.59	-0.02
256	SLU 66	-19	6	2611	0.95	-4.58	-0.02
256	SLU 67	-19	6	2610	0.95	-4.59	-0.02
256	SLU 68	-20	6	2590	0.94	-4.59	-0.02
256	SLU 69	-19	6	2611	0.94	-4.59	-0.02
256	SLU 70	-19	6	2610	0.94	-4.59	-0.02
256	SLU 71	-20	6	2591	0.94	-4.6	-0.02

Nodo	Cont.	Reazione a traslazione			Reazione a rotazione		
Ind.	N.br.	x	y	z	x	y	z
256	SLU 72	-20	6	2591	0.94	-4.6	-0.02
256	SLU 73	-40	6	2924	1.42	-5.89	-0.03
256	SLU 74	-39	6	2944	1.42	-5.89	-0.03
256	SLU 75	-39	6	2944	1.42	-5.89	-0.03
256	SLU 76	-41	6	2924	1.41	-5.9	-0.03
256	SLU 77	-39	6	2944	1.41	-5.89	-0.03
256	SLU 78	-39	6	2944	1.41	-5.9	-0.03
256	SLU 79	-41	6	2925	1.4	-5.9	-0.03
256	SLU 80	-41	6	2924	1.4	-5.9	-0.03
256	SLU 81	-49	6	3068	1.63	-6.45	-0.03
256	SLU 82	-49	6	3067	1.62	-6.45	-0.03
256	SLU 83	-49	6	3068	1.62	-6.45	-0.03
256	SLU 84	-49	6	3067	1.61	-6.46	-0.03
256	SLE RA 1	-13	4	1927	0.66	-3.32	-0.02
256	SLE RA 2	-13	4	1926	0.66	-3.32	-0.02
256	SLE RA 3	-12	4	1940	0.65	-3.32	-0.02
256	SLE RA 4	-12	4	1940	0.65	-3.32	-0.02
256	SLE RA 5	-13	4	1927	0.65	-3.33	-0.02
256	SLE RA 6	-12	4	1940	0.65	-3.32	-0.02
256	SLE RA 7	-12	4	1940	0.64	-3.32	-0.02
256	SLE RA 8	-13	4	1927	0.64	-3.33	-0.02
256	SLE RA 9	-13	4	1927	0.64	-3.33	-0.02
256	SLE RA 10	-27	5	2149	0.97	-4.19	-0.02
256	SLE RA 11	-26	5	2163	0.96	-4.19	-0.02
256	SLE RA 12	-26	5	2162	0.96	-4.19	-0.02
256	SLE RA 13	-27	5	2149	0.96	-4.2	-0.02
256	SLE RA 14	-26	5	2163	0.96	-4.19	-0.02
256	SLE RA 15	-26	5	2162	0.96	-4.19	-0.02
256	SLE RA 16	-27	5	2150	0.96	-4.2	-0.02
256	SLE RA 17	-27	5	2149	0.96	-4.2	-0.02
256	SLE RA 18	-32	5	2245	1.1	-4.56	-0.02
256	SLE RA 19	-32	5	2244	1.1	-4.56	-0.02
256	SLE RA 20	-33	5	2245	1.1	-4.57	-0.02
256	SLE RA 21	-33	5	2244	1.1	-4.57	-0.02
256	SLE FR 1	-13	4	1927	0.66	-3.32	-0.02
256	SLE FR 2	-13	4	1927	0.66	-3.32	-0.02
256	SLE FR 3	-13	4	1927	0.65	-3.32	-0.02
256	SLE FR 4	-19	4	2022	0.79	-3.69	-0.02
256	SLE FR 5	-19	4	2022	0.79	-3.69	-0.02
256	SLE FR 6	-23	5	2086	0.88	-3.94	-0.02
256	SLE QP 1	-13	4	1927	0.66	-3.32	-0.02
256	SLE QP 2	-19	4	2022	0.79	-3.69	-0.02
256	SLD 1	639	7	1915	-2.62	23.88	-0.03
256	SLD 2	639	7	1915	-2.62	23.88	-0.03
256	SLD 3	585	-4	1562	8.84	22.17	0.02
256	SLD 4	585	-4	1562	8.84	22.17	0.02
256	SLD 5	260	22	2525	-17.61	7.18	-0.1
256	SLD 6	260	22	2525	-17.61	7.18	-0.1
256	SLD 7	80	-15	1350	20.58	1.46	0.07
256	SLD 8	80	-15	1350	20.58	1.46	0.07
256	SLD 9	-118	24	2695	-19	-8.85	-0.11
256	SLD 10	-118	24	2695	-19	-8.85	-0.11
256	SLD 11	-298	-13	1520	19.19	-14.57	0.06
256	SLD 12	-298	-13	1520	19.19	-14.57	0.06
256	SLD 13	-622	13	2482	-7.26	-29.55	-0.06
256	SLD 14	-622	13	2482	-7.26	-29.55	-0.06
256	SLD 15	-677	2	2130	4.2	-31.27	-0.01
256	SLD 16	-677	2	2130	4.2	-31.27	-0.01
256	SLV 1	1493	11	1768	-8.23	59.78	-0.05
256	SLV 2	1493	11	1768	-8.23	59.78	-0.05
256	SLV 3	1363	-17	923	20.93	55.61	0.08
256	SLV 4	1363	-17	923	20.93	55.61	0.08
256	SLV 5	632	49	3229	-46.13	21.69	-0.22
256	SLV 6	632	49	3229	-46.13	21.69	-0.22
256	SLV 7	199	-44	410	51.05	7.76	0.2
256	SLV 8	199	-44	410	51.05	7.76	0.2
256	SLV 9	-237	53	3635	-49.47	-15.15	-0.24
256	SLV 10	-237	53	3635	-49.47	-15.15	-0.24
256	SLV 11	-669	-40	816	47.72	-29.07	0.19
256	SLV 12	-669	-40	816	47.72	-29.07	0.19
256	SLV 13	-1401	26	3122	-19.34	-62.99	-0.11
256	SLV 14	-1401	26	3122	-19.34	-62.99	-0.11
256	SLV 15	-1531	-2	2277	9.81	-67.17	0.01
256	SLV 16	-1531	-2	2277	9.81	-67.17	0.01
257	SLU 1	44	4	2011	0.5	2.95	-0.01
257	SLU 2	44	4	2010	0.49	2.93	-0.01
257	SLU 3	47	4	2035	0.49	3.1	-0.01
257	SLU 4	47	4	2034	0.49	3.09	-0.01
257	SLU 5	43	4	2010	0.49	2.92	-0.01
257	SLU 6	47	4	2035	0.49	3.09	-0.01
257	SLU 7	47	4	2035	0.49	3.08	-0.01
257	SLU 8	43	4	2011	0.49	2.92	-0.01
257	SLU 9	43	4	2011	0.48	2.91	-0.01
257	SLU 10	29	4	2364	0.87	2.62	-0.02
257	SLU 11	33	4	2390	0.87	2.79	-0.02
257	SLU 12	33	4	2389	0.87	2.78	-0.02
257	SLU 13	29	4	2364	0.86	2.61	-0.02
257	SLU 14	33	4	2390	0.86	2.78	-0.02
257	SLU 15	33	4	2389	0.86	2.77	-0.02
257	SLU 16	29	4	2366	0.86	2.61	-0.02
257	SLU 17	29	4	2365	0.86	2.6	-0.02

Nodo	Cont.	Reazione a traslazione			Reazione a rotazione		
Ind.	N.br.	x	y	z	x	y	z
257	SLU 18	24	4	2517	1.03	2.5	-0.02
257	SLU 19	23	4	2517	1.03	2.49	-0.02
257	SLU 20	23	4	2518	1.03	2.49	-0.02
257	SLU 21	23	4	2517	1.03	2.48	-0.02
257	SLU 22	44	4	2340	0.78	3.2	-0.02
257	SLU 23	43	4	2339	0.78	3.19	-0.02
257	SLU 24	47	4	2364	0.77	3.36	-0.02
257	SLU 25	47	4	2364	0.77	3.35	-0.02
257	SLU 26	43	4	2339	0.77	3.18	-0.02
257	SLU 27	47	4	2365	0.77	3.34	-0.02
257	SLU 28	47	4	2364	0.77	3.34	-0.02
257	SLU 29	43	4	2341	0.77	3.18	-0.02
257	SLU 30	43	4	2340	0.77	3.17	-0.02
257	SLU 31	29	5	2693	1.15	2.88	-0.02
257	SLU 32	33	5	2719	1.15	3.04	-0.02
257	SLU 33	33	5	2718	1.15	3.04	-0.02
257	SLU 34	29	5	2694	1.15	2.86	-0.02
257	SLU 35	32	5	2719	1.14	3.03	-0.02
257	SLU 36	32	5	2719	1.14	3.03	-0.02
257	SLU 37	29	5	2695	1.14	2.86	-0.02
257	SLU 38	29	5	2694	1.14	2.86	-0.02
257	SLU 39	23	5	2847	1.31	2.75	-0.02
257	SLU 40	23	5	2846	1.31	2.75	-0.02
257	SLU 41	23	5	2847	1.31	2.74	-0.02
257	SLU 42	23	5	2846	1.31	2.74	-0.02
257	SLU 43	57	5	2501	0.55	3.74	-0.02
257	SLU 44	57	5	2500	0.55	3.73	-0.02
257	SLU 45	60	5	2525	0.54	3.9	-0.02
257	SLU 46	60	5	2525	0.54	3.89	-0.02
257	SLU 47	57	5	2500	0.54	3.72	-0.02
257	SLU 48	60	5	2526	0.54	3.89	-0.02
257	SLU 49	60	5	2525	0.54	3.88	-0.02
257	SLU 50	57	5	2502	0.54	3.72	-0.02
257	SLU 51	56	5	2501	0.54	3.71	-0.02
257	SLU 52	43	5	2855	0.92	3.42	-0.02
257	SLU 53	46	5	2880	0.92	3.59	-0.02
257	SLU 54	46	5	2879	0.92	3.58	-0.02
257	SLU 55	42	5	2855	0.92	3.41	-0.02
257	SLU 56	46	5	2880	0.91	3.57	-0.02
257	SLU 57	46	5	2880	0.91	3.57	-0.02
257	SLU 58	42	5	2856	0.91	3.41	-0.02
257	SLU 59	42	5	2856	0.91	3.4	-0.02
257	SLU 60	37	5	3008	1.08	3.3	-0.02
257	SLU 61	37	5	3007	1.08	3.29	-0.02
257	SLU 62	37	5	3008	1.08	3.28	-0.02
257	SLU 63	36	5	3007	1.08	3.28	-0.02
257	SLU 64	57	5	2830	0.83	4	-0.02
257	SLU 65	57	5	2829	0.83	3.98	-0.02
257	SLU 66	60	5	2855	0.83	4.15	-0.02
257	SLU 67	60	5	2854	0.82	4.14	-0.02
257	SLU 68	56	5	2829	0.82	3.97	-0.02
257	SLU 69	60	5	2855	0.82	4.14	-0.02
257	SLU 70	60	5	2854	0.82	4.13	-0.02
257	SLU 71	56	5	2831	0.82	3.97	-0.02
257	SLU 72	56	5	2830	0.82	3.97	-0.02
257	SLU 73	42	6	3184	1.2	3.67	-0.02
257	SLU 74	46	6	3209	1.2	3.84	-0.02
257	SLU 75	46	6	3209	1.2	3.83	-0.02
257	SLU 76	42	6	3184	1.2	3.66	-0.02
257	SLU 77	46	6	3210	1.2	3.83	-0.02
257	SLU 78	46	6	3209	1.2	3.82	-0.02
257	SLU 79	42	6	3186	1.2	3.66	-0.02
257	SLU 80	42	6	3185	1.19	3.65	-0.02
257	SLU 81	37	6	3337	1.37	3.55	-0.02
257	SLU 82	36	6	3336	1.36	3.54	-0.02
257	SLU 83	36	6	3337	1.36	3.54	-0.02
257	SLU 84	36	6	3337	1.36	3.53	-0.02
257	SLE RA 1	44	4	2105	0.58	3.02	-0.01
257	SLE RA 2	44	4	2104	0.57	3.01	-0.01
257	SLE RA 3	46	4	2121	0.57	3.12	-0.01
257	SLE RA 4	46	4	2121	0.57	3.12	-0.01
257	SLE RA 5	43	4	2104	0.57	3	-0.01
257	SLE RA 6	46	4	2121	0.57	3.11	-0.01
257	SLE RA 7	46	4	2121	0.57	3.11	-0.01
257	SLE RA 8	43	4	2105	0.57	3	-0.01
257	SLE RA 9	43	4	2105	0.57	3	-0.01
257	SLE RA 10	34	4	2340	0.83	2.8	-0.02
257	SLE RA 11	37	4	2358	0.82	2.91	-0.02
257	SLE RA 12	36	4	2357	0.82	2.91	-0.02
257	SLE RA 13	34	4	2341	0.82	2.79	-0.02
257	SLE RA 14	36	4	2358	0.82	2.91	-0.02
257	SLE RA 15	36	4	2357	0.82	2.9	-0.02
257	SLE RA 16	34	4	2342	0.82	2.79	-0.02
257	SLE RA 17	34	4	2341	0.82	2.79	-0.02
257	SLE RA 18	30	4	2443	0.93	2.72	-0.02
257	SLE RA 19	30	4	2442	0.93	2.72	-0.02
257	SLE RA 20	30	4	2443	0.93	2.71	-0.02
257	SLE RA 21	30	4	2442	0.93	2.71	-0.02
257	SLE FR 1	44	4	2105	0.58	3.02	-0.01
257	SLE FR 2	44	4	2105	0.58	3.02	-0.01
257	SLE FR 3	44	4	2105	0.57	3.01	-0.01

Nodo	Cont.	Reazione a traslazione			Reazione a rotazione		
Ind.	N.br.	x	y	z	x	y	z
257	SLE FR 4	40	4	2206	0.68	2.93	-0.01
257	SLE FR 5	40	4	2206	0.68	2.93	-0.01
257	SLE FR 6	37	4	2274	0.75	2.87	-0.01
257	SLE QP 1	44	4	2105	0.58	3.02	-0.01
257	SLE QP 2	40	4	2206	0.68	2.93	-0.01
257	SLD 1	684	6	2019	-2.01	29.91	-0.02
257	SLD 2	684	6	2019	-2.01	29.91	-0.02
257	SLD 3	608	-1	1577	6.46	26.6	0.01
257	SLD 4	608	-1	1577	6.46	26.6	0.01
257	SLD 5	348	15	2820	-12.97	16.05	-0.07
257	SLD 6	348	15	2820	-12.97	16.05	-0.07
257	SLD 7	95	-8	1347	15.26	5	0.04
257	SLD 8	95	-8	1347	15.26	5	0.04
257	SLD 9	-16	16	3065	-13.89	0.85	-0.07
257	SLD 10	-16	16	3065	-13.89	0.85	-0.07
257	SLD 11	-269	-7	1592	14.34	-10.19	0.04
257	SLD 12	-269	-7	1592	14.34	-10.19	0.04
257	SLD 13	-528	9	2835	-5.09	-20.74	-0.04
257	SLD 14	-528	9	2835	-5.09	-20.74	-0.04
257	SLD 15	-604	2	2393	3.38	-24.06	-0.01
257	SLD 16	-604	2	2393	3.38	-24.06	-0.01
257	SLV 1	1520	9	1762	-6.39	64.95	-0.03
257	SLV 2	1520	9	1762	-6.39	64.95	-0.03
257	SLV 3	1338	-9	704	15.14	57.05	0.05
257	SLV 4	1338	-9	704	15.14	57.05	0.05
257	SLV 5	759	32	3677	-34.09	33.52	-0.15
257	SLV 6	759	32	3677	-34.09	33.52	-0.15
257	SLV 7	154	-27	151	37.68	7.18	0.13
257	SLV 8	154	-27	151	37.68	7.18	0.13
257	SLV 9	-75	35	4261	-36.31	-1.32	-0.16
257	SLV 10	-75	35	4261	-36.31	-1.32	-0.16
257	SLV 11	-679	-25	735	35.46	-27.66	0.12
257	SLV 12	-679	-25	735	35.46	-27.66	0.12
257	SLV 13	-1259	17	3708	-13.78	-51.19	-0.08
257	SLV 14	-1259	17	3708	-13.78	-51.19	-0.08
257	SLV 15	-1440	-1	2650	7.75	-59.09	0
257	SLV 16	-1440	-1	2650	7.75	-59.09	0
258	SLU 1	-47	2	2234	0.41	-5.42	-0.01
258	SLU 2	-47	2	2232	0.4	-5.43	-0.01
258	SLU 3	-45	2	2265	0.41	-5.41	-0.01
258	SLU 4	-45	2	2264	0.41	-5.42	-0.01
258	SLU 5	-47	2	2233	0.41	-5.44	-0.01
258	SLU 6	-45	2	2265	0.41	-5.42	-0.01
258	SLU 7	-45	2	2264	0.41	-5.43	-0.01
258	SLU 8	-47	2	2235	0.41	-5.44	-0.01
258	SLU 9	-47	2	2234	0.41	-5.45	-0.01
258	SLU 10	-81	3	2617	0.65	-7.44	-0.01
258	SLU 11	-78	3	2649	0.66	-7.43	-0.01
258	SLU 12	-78	3	2648	0.66	-7.43	-0.01
258	SLU 13	-81	3	2617	0.65	-7.45	-0.01
258	SLU 14	-78	3	2649	0.66	-7.44	-0.01
258	SLU 15	-79	3	2648	0.66	-7.44	-0.01
258	SLU 16	-81	3	2619	0.66	-7.46	-0.01
258	SLU 17	-81	3	2618	0.66	-7.46	-0.01
258	SLU 18	-95	3	2783	0.76	-8.3	-0.01
258	SLU 19	-95	3	2782	0.76	-8.3	-0.01
258	SLU 20	-95	3	2784	0.76	-8.31	-0.01
258	SLU 21	-95	3	2783	0.76	-8.31	-0.01
258	SLU 22	-64	3	2602	0.59	-6.85	-0.01
258	SLU 23	-65	3	2601	0.59	-6.85	-0.01
258	SLU 24	-62	3	2633	0.59	-6.84	-0.01
258	SLU 25	-62	3	2632	0.59	-6.84	-0.01
258	SLU 26	-65	3	2601	0.59	-6.86	-0.01
258	SLU 27	-63	3	2633	0.6	-6.85	-0.01
258	SLU 28	-63	3	2632	0.59	-6.85	-0.01
258	SLU 29	-65	3	2603	0.59	-6.87	-0.01
258	SLU 30	-65	3	2602	0.59	-6.87	-0.01
258	SLU 31	-98	3	2985	0.84	-8.87	-0.01
258	SLU 32	-96	3	3017	0.84	-8.85	-0.01
258	SLU 33	-96	3	3016	0.84	-8.86	-0.01
258	SLU 34	-99	3	2985	0.84	-8.88	-0.01
258	SLU 35	-96	3	3018	0.84	-8.86	-0.01
258	SLU 36	-96	3	3017	0.84	-8.87	-0.01
258	SLU 37	-99	3	2987	0.84	-8.88	-0.01
258	SLU 38	-99	3	2986	0.84	-8.89	-0.01
258	SLU 39	-113	3	3151	0.95	-9.73	-0.01
258	SLU 40	-113	3	3150	0.95	-9.73	-0.01
258	SLU 41	-113	3	3152	0.95	-9.74	-0.01
258	SLU 42	-113	3	3151	0.95	-9.74	-0.01
258	SLU 43	-55	3	2778	0.46	-6.56	-0.01
258	SLU 44	-55	3	2776	0.46	-6.57	-0.01
258	SLU 45	-52	3	2809	0.47	-6.55	-0.01
258	SLU 46	-53	3	2808	0.46	-6.56	-0.01
258	SLU 47	-55	3	2777	0.46	-6.58	-0.01
258	SLU 48	-53	3	2809	0.47	-6.56	-0.01
258	SLU 49	-53	3	2808	0.47	-6.57	-0.01
258	SLU 50	-55	3	2779	0.47	-6.58	-0.01
258	SLU 51	-55	3	2778	0.46	-6.58	-0.01
258	SLU 52	-89	3	3161	0.71	-8.58	-0.01
258	SLU 53	-86	3	3193	0.71	-8.57	-0.01
258	SLU 54	-86	3	3192	0.71	-8.57	-0.01

Nodo	Cont.	Reazione a traslazione			Reazione a rotazione		
Ind.	N.br.	x	y	z	x	y	z
258	SLU 55	-89	3	3161	0.71	-8.59	-0.01
258	SLU 56	-86	3	3193	0.72	-8.58	-0.01
258	SLU 57	-87	3	3192	0.71	-8.58	-0.01
258	SLU 58	-89	3	3163	0.72	-8.59	-0.01
258	SLU 59	-89	3	3162	0.71	-8.6	-0.01
258	SLU 60	-103	3	3327	0.82	-9.44	-0.01
258	SLU 61	-103	3	3326	0.82	-9.44	-0.01
258	SLU 62	-103	3	3328	0.82	-9.45	-0.01
258	SLU 63	-103	3	3327	0.82	-9.45	-0.01
258	SLU 64	-72	3	3146	0.65	-7.98	-0.01
258	SLU 65	-73	3	3145	0.65	-7.99	-0.01
258	SLU 66	-70	3	3177	0.65	-7.98	-0.01
258	SLU 67	-70	3	3176	0.65	-7.98	-0.01
258	SLU 68	-73	3	3145	0.65	-8	-0.01
258	SLU 69	-70	3	3177	0.65	-7.99	-0.01
258	SLU 70	-71	3	3176	0.65	-7.99	-0.01
258	SLU 71	-73	3	3147	0.65	-8	-0.01
258	SLU 72	-73	3	3146	0.65	-8.01	-0.01
258	SLU 73	-106	4	3529	0.9	-10.01	-0.01
258	SLU 74	-104	4	3561	0.9	-9.99	-0.02
258	SLU 75	-104	4	3560	0.9	-10	-0.02
258	SLU 76	-107	4	3529	0.9	-10.02	-0.01
258	SLU 77	-104	4	3562	0.9	-10	-0.02
258	SLU 78	-104	4	3561	0.9	-10.01	-0.02
258	SLU 79	-107	4	3531	0.9	-10.02	-0.01
258	SLU 80	-107	4	3530	0.9	-10.02	-0.01
258	SLU 81	-120	4	3695	1.01	-10.86	-0.02
258	SLU 82	-121	4	3694	1.01	-10.87	-0.02
258	SLU 83	-121	4	3696	1.01	-10.87	-0.02
258	SLU 84	-121	4	3695	1.01	-10.88	-0.02
258	SLE RA 1	-52	2	2339	0.46	-5.83	-0.01
258	SLE RA 2	-52	2	2338	0.46	-5.83	-0.01
258	SLE RA 3	-50	2	2360	0.46	-5.82	-0.01
258	SLE RA 4	-50	2	2359	0.46	-5.83	-0.01
258	SLE RA 5	-52	2	2338	0.46	-5.84	-0.01
258	SLE RA 6	-50	2	2360	0.46	-5.83	-0.01
258	SLE RA 7	-51	2	2359	0.46	-5.83	-0.01
258	SLE RA 8	-52	2	2340	0.46	-5.84	-0.01
258	SLE RA 9	-52	2	2339	0.46	-5.84	-0.01
258	SLE RA 10	-74	3	2594	0.62	-7.18	-0.01
258	SLE RA 11	-73	3	2616	0.63	-7.17	-0.01
258	SLE RA 12	-73	3	2615	0.63	-7.17	-0.01
258	SLE RA 13	-75	3	2595	0.62	-7.18	-0.01
258	SLE RA 14	-73	3	2616	0.63	-7.17	-0.01
258	SLE RA 15	-73	3	2615	0.63	-7.18	-0.01
258	SLE RA 16	-75	3	2596	0.63	-7.18	-0.01
258	SLE RA 17	-75	3	2595	0.63	-7.19	-0.01
258	SLE RA 18	-84	3	2705	0.7	-7.75	-0.01
258	SLE RA 19	-84	3	2705	0.7	-7.75	-0.01
258	SLE RA 20	-84	3	2706	0.7	-7.75	-0.01
258	SLE RA 21	-84	3	2705	0.7	-7.76	-0.01
258	SLE FR 1	-52	2	2339	0.46	-5.83	-0.01
258	SLE FR 2	-52	2	2339	0.46	-5.83	-0.01
258	SLE FR 3	-52	2	2339	0.46	-5.83	-0.01
258	SLE FR 4	-61	3	2449	0.53	-6.4	-0.01
258	SLE FR 5	-61	3	2449	0.53	-6.41	-0.01
258	SLE FR 6	-68	3	2522	0.58	-6.79	-0.01
258	SLE QP 1	-52	2	2339	0.46	-5.83	-0.01
258	SLE QP 2	-61	3	2449	0.53	-6.4	-0.01
258	SLD 1	556	3	2162	-1.33	19.75	-0.01
258	SLD 2	556	3	2162	-1.33	19.75	-0.01
258	SLD 3	493	1	1609	3.81	17.8	0
258	SLD 4	493	1	1609	3.81	17.8	0
258	SLD 5	218	7	3202	-7.82	4.41	-0.04
258	SLD 6	218	7	3202	-7.82	4.41	-0.04
258	SLD 7	10	-2	1358	9.3	-2.11	0.02
258	SLD 8	10	-2	1358	9.3	-2.11	0.02
258	SLD 9	-133	7	3540	-8.24	-10.7	-0.04
258	SLD 10	-133	7	3540	-8.24	-10.7	-0.04
258	SLD 11	-341	-2	1697	8.88	-17.22	0.02
258	SLD 12	-341	-2	1697	8.88	-17.22	0.02
258	SLD 13	-616	5	3290	-2.75	-30.6	-0.02
258	SLD 14	-616	5	3290	-2.75	-30.6	-0.02
258	SLD 15	-679	2	2737	2.39	-32.56	-0.01
258	SLD 16	-679	2	2737	2.39	-32.56	-0.01
258	SLV 1	1359	4	1765	-4.25	53.91	-0.02
258	SLV 2	1359	4	1765	-4.25	53.91	-0.02
258	SLV 3	1208	-2	443	8.79	49.07	0.02
258	SLV 4	1208	-2	443	8.79	49.07	0.02
258	SLV 5	594	13	4248	-20.67	19.02	-0.08
258	SLV 6	594	13	4248	-20.67	19.02	-0.08
258	SLV 7	90	-9	-157	22.78	2.91	0.06
258	SLV 8	90	-9	-157	22.78	2.91	0.06
258	SLV 9	-213	14	5055	-21.72	-15.71	-0.08
258	SLV 10	-213	14	5055	-21.72	-15.71	-0.08
258	SLV 11	-716	-8	650	21.74	-31.83	0.06
258	SLV 12	-716	-8	650	21.74	-31.83	0.06
258	SLV 13	-1331	7	4455	-7.72	-61.88	-0.04
258	SLV 14	-1331	7	4455	-7.72	-61.88	-0.04
258	SLV 15	-1482	1	3134	5.31	-66.71	0
258	SLV 16	-1482	1	3134	5.31	-66.71	0

Nodo	Cont.	Reazione a traslazione			Reazione a rotazione		
Ind.	N.br.	x	y	z	x	y	z
259	SLU 1	-141	0	2509	0.3	-5.27	-0.01
259	SLU 2	-142	0	2507	0.3	-5.28	-0.01
259	SLU 3	-140	0	2547	0.3	-5.22	-0.01
259	SLU 4	-140	0	2546	0.3	-5.22	-0.01
259	SLU 5	-142	0	2508	0.3	-5.29	-0.01
259	SLU 6	-141	0	2548	0.31	-5.23	-0.01
259	SLU 7	-141	0	2547	0.31	-5.23	-0.01
259	SLU 8	-142	0	2511	0.3	-5.29	-0.01
259	SLU 9	-142	0	2510	0.3	-5.3	-0.01
259	SLU 10	-191	0	2932	0.43	-7.16	-0.01
259	SLU 11	-190	0	2972	0.43	-7.09	-0.01
259	SLU 12	-190	0	2971	0.43	-7.1	-0.01
259	SLU 13	-191	0	2933	0.43	-7.17	-0.01
259	SLU 14	-190	0	2973	0.44	-7.11	-0.01
259	SLU 15	-190	0	2972	0.43	-7.11	-0.01
259	SLU 16	-191	0	2936	0.43	-7.17	-0.01
259	SLU 17	-191	0	2935	0.43	-7.18	-0.01
259	SLU 18	-212	0	3117	0.48	-7.96	-0.01
259	SLU 19	-212	0	3115	0.48	-7.96	-0.01
259	SLU 20	-212	0	3117	0.49	-7.97	-0.01
259	SLU 21	-212	0	3116	0.49	-7.97	-0.01
259	SLU 22	-174	0	2927	0.4	-6.45	-0.01
259	SLU 23	-174	0	2925	0.4	-6.46	-0.01
259	SLU 24	-173	0	2965	0.4	-6.4	-0.01
259	SLU 25	-173	0	2964	0.4	-6.4	-0.01
259	SLU 26	-174	0	2926	0.4	-6.47	-0.01
259	SLU 27	-173	0	2966	0.41	-6.41	-0.01
259	SLU 28	-173	0	2965	0.41	-6.41	-0.01
259	SLU 29	-174	0	2929	0.4	-6.48	-0.01
259	SLU 30	-174	0	2928	0.4	-6.48	-0.01
259	SLU 31	-223	0	3350	0.53	-8.34	-0.01
259	SLU 32	-222	0	3390	0.53	-8.28	-0.01
259	SLU 33	-222	0	3389	0.53	-8.28	-0.01
259	SLU 34	-223	0	3351	0.53	-8.35	-0.01
259	SLU 35	-222	0	3391	0.54	-8.29	-0.01
259	SLU 36	-222	0	3390	0.54	-8.29	-0.01
259	SLU 37	-223	0	3354	0.53	-8.35	-0.01
259	SLU 38	-224	0	3353	0.53	-8.36	-0.01
259	SLU 39	-244	0	3535	0.58	-9.14	-0.01
259	SLU 40	-244	0	3533	0.58	-9.14	-0.01
259	SLU 41	-244	0	3535	0.59	-9.15	-0.01
259	SLU 42	-244	0	3534	0.59	-9.15	-0.01
259	SLU 43	-173	0	3119	0.35	-6.45	-0.01
259	SLU 44	-173	0	3117	0.35	-6.46	-0.01
259	SLU 45	-172	0	3157	0.36	-6.39	-0.01
259	SLU 46	-172	0	3155	0.36	-6.4	-0.01
259	SLU 47	-173	0	3117	0.36	-6.47	-0.01
259	SLU 48	-172	0	3157	0.36	-6.4	-0.01
259	SLU 49	-172	0	3156	0.36	-6.41	-0.01
259	SLU 50	-173	0	3120	0.36	-6.47	-0.01
259	SLU 51	-173	0	3119	0.36	-6.48	-0.01
259	SLU 52	-222	0	3542	0.48	-8.34	-0.01
259	SLU 53	-221	0	3582	0.49	-8.27	-0.01
259	SLU 54	-221	0	3580	0.49	-8.28	-0.01
259	SLU 55	-222	0	3542	0.48	-8.35	-0.01
259	SLU 56	-221	0	3582	0.49	-8.28	-0.01
259	SLU 57	-221	0	3581	0.49	-8.29	-0.01
259	SLU 58	-222	0	3545	0.49	-8.35	-0.01
259	SLU 59	-223	0	3544	0.49	-8.36	-0.01
259	SLU 60	-243	0	3726	0.54	-9.13	-0.01
259	SLU 61	-243	0	3725	0.54	-9.14	-0.01
259	SLU 62	-243	0	3727	0.54	-9.14	-0.01
259	SLU 63	-243	0	3725	0.54	-9.15	-0.01
259	SLU 64	-205	0	3537	0.45	-7.63	-0.01
259	SLU 65	-205	0	3535	0.45	-7.64	-0.01
259	SLU 66	-204	0	3575	0.46	-7.57	-0.01
259	SLU 67	-204	0	3573	0.46	-7.58	-0.01
259	SLU 68	-206	0	3535	0.46	-7.65	-0.01
259	SLU 69	-204	0	3576	0.46	-7.58	-0.01
259	SLU 70	-204	0	3574	0.46	-7.59	-0.01
259	SLU 71	-205	0	3538	0.46	-7.65	-0.01
259	SLU 72	-206	0	3537	0.46	-7.66	-0.01
259	SLU 73	-255	0	3960	0.58	-9.52	-0.01
259	SLU 74	-253	0	4000	0.59	-9.45	-0.01
259	SLU 75	-253	0	3998	0.59	-9.46	-0.01
259	SLU 76	-255	0	3960	0.59	-9.53	-0.01
259	SLU 77	-253	0	4001	0.59	-9.46	-0.01
259	SLU 78	-254	0	3999	0.59	-9.47	-0.01
259	SLU 79	-255	0	3964	0.59	-9.53	-0.01
259	SLU 80	-255	0	3962	0.59	-9.54	-0.01
259	SLU 81	-275	0	4144	0.64	-10.31	-0.01
259	SLU 82	-276	0	4143	0.64	-10.32	-0.01
259	SLU 83	-276	0	4145	0.64	-10.33	-0.01
259	SLU 84	-276	0	4144	0.64	-10.33	-0.01
259	SLE RA 1	-151	0	2629	0.33	-5.61	-0.01
259	SLE RA 2	-151	0	2627	0.33	-5.62	-0.01
259	SLE RA 3	-150	0	2654	0.33	-5.57	-0.01
259	SLE RA 4	-150	0	2653	0.33	-5.58	-0.01
259	SLE RA 5	-151	0	2628	0.33	-5.62	-0.01
259	SLE RA 6	-150	0	2655	0.33	-5.58	-0.01
259	SLE RA 7	-150	0	2654	0.33	-5.58	-0.01

Nodo	Cont.	Reazione a traslazione			Reazione a rotazione		
Ind.	N.br.	x	y	z	x	y	z
259	SLE RA 8	-151	0	2630	0.33	-5.62	-0.01
259	SLE RA 9	-151	0	2629	0.33	-5.63	-0.01
259	SLE RA 10	-184	0	2911	0.41	-6.87	-0.01
259	SLE RA 11	-183	0	2937	0.42	-6.82	-0.01
259	SLE RA 12	-183	0	2936	0.42	-6.83	-0.01
259	SLE RA 13	-184	0	2911	0.41	-6.88	-0.01
259	SLE RA 14	-183	0	2938	0.42	-6.83	-0.01
259	SLE RA 15	-183	0	2937	0.42	-6.84	-0.01
259	SLE RA 16	-184	0	2913	0.42	-6.88	-0.01
259	SLE RA 17	-184	0	2912	0.42	-6.88	-0.01
259	SLE RA 18	-198	0	3034	0.45	-7.4	-0.01
259	SLE RA 19	-198	0	3033	0.45	-7.4	-0.01
259	SLE RA 20	-198	0	3034	0.45	-7.41	-0.01
259	SLE RA 21	-198	0	3033	0.45	-7.41	-0.01
259	SLE FR 1	-151	0	2629	0.33	-5.61	-0.01
259	SLE FR 2	-151	0	2629	0.33	-5.61	-0.01
259	SLE FR 3	-151	0	2629	0.33	-5.61	-0.01
259	SLE FR 4	-165	0	2750	0.36	-6.15	-0.01
259	SLE FR 5	-165	0	2750	0.37	-6.15	-0.01
259	SLE FR 6	-174	0	2831	0.39	-6.5	-0.01
259	SLE QP 1	-151	0	2629	0.33	-5.61	-0.01
259	SLE QP 2	-165	0	2750	0.36	-6.15	-0.01
259	SLD 1	413	2	2314	-0.55	19.1	-0.01
259	SLD 2	413	2	2314	-0.55	19.1	-0.01
259	SLD 3	361	1	1631	1.72	16.88	0
259	SLD 4	361	1	1631	1.72	16.88	0
259	SLD 5	87	3	3654	-3.36	4.79	-0.01
259	SLD 6	87	3	3654	-3.36	4.79	-0.01
259	SLD 7	-85	-2	1380	4.23	-2.61	0
259	SLD 8	-85	-2	1380	4.23	-2.61	0
259	SLD 9	-244	2	4121	-3.5	-9.68	-0.02
259	SLD 10	-244	2	4121	-3.5	-9.68	-0.02
259	SLD 11	-417	-3	1846	4.09	-17.09	0
259	SLD 12	-417	-3	1846	4.09	-17.09	0
259	SLD 13	-691	-1	3869	-1	-29.17	-0.01
259	SLD 14	-691	-1	3869	-1	-29.17	-0.01
259	SLD 15	-743	-2	3187	1.28	-31.39	-0.01
259	SLD 16	-743	-2	3187	1.28	-31.39	-0.01
259	SLV 1	1168	5	1711	-1.95	52.09	-0.01
259	SLV 2	1168	5	1711	-1.95	52.09	-0.01
259	SLV 3	1040	2	82	3.8	46.6	0.01
259	SLV 4	1040	2	82	3.8	46.6	0.01
259	SLV 5	429	7	4909	-9.06	19.66	-0.03
259	SLV 6	429	7	4909	-9.06	19.66	-0.03
259	SLV 7	3	-5	-521	10.13	1.34	0.02
259	SLV 8	3	-5	-521	10.13	1.34	0.02
259	SLV 9	-332	5	6021	-9.4	-13.64	-0.03
259	SLV 10	-332	5	6021	-9.4	-13.64	-0.03
259	SLV 11	-759	-7	592	9.79	-31.95	0.01
259	SLV 12	-759	-7	592	9.79	-31.95	0.01
259	SLV 13	-1370	-2	5419	-3.07	-58.89	-0.02
259	SLV 14	-1370	-2	5419	-3.07	-58.89	-0.02
259	SLV 15	-1498	-5	3790	2.68	-64.39	-0.01
259	SLV 16	-1498	-5	3790	2.68	-64.39	-0.01
260	SLU 1	-365	130	4372	-6.74	-10.76	-0.01
260	SLU 2	-364	131	4367	-6.76	-10.76	-0.01
260	SLU 3	-369	134	4443	-6.9	-10.89	-0.01
260	SLU 4	-369	134	4440	-6.91	-10.88	-0.01
260	SLU 5	-365	133	4370	-6.81	-10.77	-0.01
260	SLU 6	-369	136	4446	-6.95	-10.89	-0.01
260	SLU 7	-369	137	4443	-6.96	-10.89	-0.01
260	SLU 8	-365	135	4378	-6.83	-10.78	-0.01
260	SLU 9	-365	135	4375	-6.84	-10.78	-0.01
260	SLU 10	-440	146	5103	-7.73	-13.2	-0.01
260	SLU 11	-444	150	5178	-7.87	-13.32	-0.01
260	SLU 12	-444	150	5176	-7.89	-13.32	-0.01
260	SLU 13	-440	149	5106	-7.78	-13.2	-0.01
260	SLU 14	-444	152	5181	-7.92	-13.33	-0.01
260	SLU 15	-444	152	5179	-7.93	-13.32	-0.01
260	SLU 16	-440	150	5114	-7.81	-13.21	-0.01
260	SLU 17	-440	151	5111	-7.82	-13.21	-0.01
260	SLU 18	-472	152	5423	-8.13	-14.24	-0.01
260	SLU 19	-472	153	5420	-8.14	-14.24	-0.01
260	SLU 20	-472	155	5426	-8.18	-14.25	-0.01
260	SLU 21	-472	155	5423	-8.19	-14.25	-0.01
260	SLU 22	-432	148	5106	-7.85	-12.88	-0.01
260	SLU 23	-432	148	5102	-7.87	-12.88	-0.01
260	SLU 24	-436	152	5177	-8.01	-13	-0.01
260	SLU 25	-436	152	5175	-8.02	-13	-0.01
260	SLU 26	-432	151	5105	-7.92	-12.88	-0.01
260	SLU 27	-436	154	5180	-8.06	-13.01	-0.01
260	SLU 28	-436	155	5178	-8.07	-13.01	-0.01
260	SLU 29	-432	153	5113	-7.94	-12.89	-0.01
260	SLU 30	-432	153	5110	-7.96	-12.89	-0.01
260	SLU 31	-507	164	5837	-8.85	-15.31	-0.01
260	SLU 32	-511	167	5913	-8.98	-15.44	-0.01
260	SLU 33	-511	168	5910	-9	-15.43	-0.01
260	SLU 34	-507	166	5840	-8.89	-15.32	-0.01
260	SLU 35	-512	170	5916	-9.03	-15.44	-0.01
260	SLU 36	-512	170	5913	-9.04	-15.44	-0.01
260	SLU 37	-507	168	5848	-8.92	-15.33	-0.01

Nodo	Cont.	Reazione a traslazione			Reazione a rotazione		
Ind.	N.br.	x	y	z	x	y	z
260	SLU 38	-507	169	5845	-8.93	-15.32	-0.01
260	SLU 39	-539	170	6157	-9.24	-16.36	-0.01
260	SLU 40	-539	171	6154	-9.25	-16.36	-0.01
260	SLU 41	-540	173	6160	-9.29	-16.36	-0.01
260	SLU 42	-539	173	6157	-9.3	-16.36	-0.01
260	SLU 43	-451	163	5432	-8.38	-13.27	-0.01
260	SLU 44	-451	163	5427	-8.4	-13.27	-0.01
260	SLU 45	-455	167	5503	-8.54	-13.39	-0.01
260	SLU 46	-455	167	5500	-8.55	-13.39	-0.01
260	SLU 47	-451	166	5430	-8.45	-13.27	-0.01
260	SLU 48	-455	169	5506	-8.59	-13.4	-0.01
260	SLU 49	-455	170	5503	-8.6	-13.39	-0.01
260	SLU 50	-451	168	5438	-8.47	-13.28	-0.01
260	SLU 51	-451	168	5435	-8.48	-13.28	-0.01
260	SLU 52	-526	179	6162	-9.37	-15.7	-0.01
260	SLU 53	-531	183	6238	-9.51	-15.82	-0.01
260	SLU 54	-530	183	6235	-9.53	-15.82	-0.01
260	SLU 55	-526	182	6166	-9.42	-15.71	-0.01
260	SLU 56	-531	185	6241	-9.56	-15.83	-0.01
260	SLU 57	-531	185	6238	-9.57	-15.83	-0.01
260	SLU 58	-527	183	6173	-9.45	-15.71	-0.01
260	SLU 59	-526	184	6171	-9.46	-15.71	-0.01
260	SLU 60	-558	185	6482	-9.77	-16.75	-0.01
260	SLU 61	-558	186	6480	-9.78	-16.74	-0.01
260	SLU 62	-559	188	6485	-9.82	-16.75	-0.01
260	SLU 63	-559	188	6483	-9.83	-16.75	-0.01
260	SLU 64	-518	181	6166	-9.49	-15.38	-0.01
260	SLU 65	-518	181	6161	-9.51	-15.38	-0.01
260	SLU 66	-522	185	6237	-9.65	-15.51	-0.01
260	SLU 67	-522	185	6234	-9.66	-15.5	-0.01
260	SLU 68	-518	184	6165	-9.56	-15.39	-0.01
260	SLU 69	-523	187	6240	-9.7	-15.51	-0.01
260	SLU 70	-522	187	6237	-9.71	-15.51	-0.01
260	SLU 71	-518	185	6172	-9.58	-15.4	-0.01
260	SLU 72	-518	186	6170	-9.6	-15.4	-0.01
260	SLU 73	-593	197	6897	-10.49	-17.82	-0.02
260	SLU 74	-598	200	6973	-10.62	-17.94	-0.02
260	SLU 75	-598	201	6970	-10.64	-17.94	-0.02
260	SLU 76	-593	199	6900	-10.53	-17.82	-0.02
260	SLU 77	-598	203	6976	-10.67	-17.95	-0.02
260	SLU 78	-598	203	6973	-10.68	-17.94	-0.02
260	SLU 79	-594	201	6908	-10.56	-17.83	-0.02
260	SLU 80	-594	202	6905	-10.57	-17.83	-0.02
260	SLU 81	-626	203	7217	-10.88	-18.86	-0.02
260	SLU 82	-626	203	7214	-10.89	-18.86	-0.02
260	SLU 83	-626	206	7220	-10.93	-18.87	-0.02
260	SLU 84	-626	206	7217	-10.94	-18.87	-0.02
260	SLE RA 1	-384	135	4582	-7.06	-11.37	-0.01
260	SLE RA 2	-384	135	4579	-7.07	-11.37	-0.01
260	SLE RA 3	-387	138	4629	-7.16	-11.45	-0.01
260	SLE RA 4	-387	138	4627	-7.17	-11.45	-0.01
260	SLE RA 5	-384	137	4581	-7.1	-11.37	-0.01
260	SLE RA 6	-387	139	4631	-7.19	-11.45	-0.01
260	SLE RA 7	-387	140	4629	-7.2	-11.45	-0.01
260	SLE RA 8	-384	138	4586	-7.12	-11.38	-0.01
260	SLE RA 9	-384	138	4584	-7.13	-11.38	-0.01
260	SLE RA 10	-434	146	5069	-7.72	-12.99	-0.01
260	SLE RA 11	-437	148	5119	-7.81	-13.07	-0.01
260	SLE RA 12	-437	148	5118	-7.82	-13.07	-0.01
260	SLE RA 13	-434	148	5071	-7.75	-12.99	-0.01
260	SLE RA 14	-437	150	5121	-7.84	-13.08	-0.01
260	SLE RA 15	-437	150	5120	-7.85	-13.08	-0.01
260	SLE RA 16	-434	149	5076	-7.77	-13	-0.01
260	SLE RA 17	-434	149	5074	-7.78	-13	-0.01
260	SLE RA 18	-456	150	5282	-7.98	-13.69	-0.01
260	SLE RA 19	-455	150	5280	-7.99	-13.69	-0.01
260	SLE RA 20	-456	152	5284	-8.01	-13.69	-0.01
260	SLE RA 21	-456	152	5282	-8.02	-13.69	-0.01
260	SLE FR 1	-384	135	4582	-7.06	-11.37	-0.01
260	SLE FR 2	-384	135	4581	-7.06	-11.37	-0.01
260	SLE FR 3	-384	136	4583	-7.07	-11.37	-0.01
260	SLE FR 4	-405	140	4791	-7.34	-12.06	-0.01
260	SLE FR 5	-405	140	4793	-7.35	-12.07	-0.01
260	SLE FR 6	-420	142	4932	-7.52	-12.53	-0.01
260	SLE QP 1	-384	135	4582	-7.06	-11.37	-0.01
260	SLE QP 2	-405	139	4792	-7.33	-12.06	-0.01
260	SLD 1	-105	237	3817	-11.23	0.44	-0.02
260	SLD 2	-105	237	3817	-11.23	0.44	-0.02
260	SLD 3	-23	-144	2543	6.51	2.7	0.02
260	SLD 4	-23	-144	2543	6.51	2.7	0.02
260	SLD 5	-440	746	6432	-35.41	-11.74	-0.07
260	SLD 6	-440	746	6432	-35.41	-11.74	-0.07
260	SLD 7	-165	-523	2185	23.73	-4.21	0.06
260	SLD 8	-165	-523	2185	23.73	-4.21	0.06
260	SLD 9	-645	802	7399	-38.39	-19.92	-0.08
260	SLD 10	-645	802	7399	-38.39	-19.92	-0.08
260	SLD 11	-370	-467	3152	20.74	-12.39	0.05
260	SLD 12	-370	-467	3152	20.74	-12.39	0.05
260	SLD 13	-788	423	7041	-21.18	-26.83	-0.04
260	SLD 14	-788	423	7041	-21.18	-26.83	-0.04
260	SLD 15	-705	42	5767	-3.44	-24.57	0

Nodo	Cont.	Reazione a traslazione			Reazione a rotazione		
Ind.	N.br.	x	y	z	x	y	z
260	SLD 16	-705	42	5767	-3.44	-24.57	0
260	SLV 1	288	366	2476	-16.36	16.76	-0.03
260	SLV 2	288	366	2476	-16.36	16.76	-0.03
260	SLV 3	487	-534	-564	25.68	22.24	0.06
260	SLV 4	487	-534	-564	25.68	22.24	0.06
260	SLV 5	-499	1573	8708	-73.79	-11.74	-0.15
260	SLV 6	-499	1573	8708	-73.79	-11.74	-0.15
260	SLV 7	164	-1427	-1426	66.32	6.55	0.15
260	SLV 8	164	-1427	-1426	66.32	6.55	0.15
260	SLV 9	-975	1706	11009	-80.99	-30.68	-0.17
260	SLV 10	-975	1706	11009	-80.99	-30.68	-0.17
260	SLV 11	-311	-1294	876	59.12	-12.39	0.13
260	SLV 12	-311	-1294	876	59.12	-12.39	0.13
260	SLV 13	-1298	813	10148	-40.34	-46.37	-0.08
260	SLV 14	-1298	813	10148	-40.34	-46.37	-0.08
260	SLV 15	-1099	-87	7108	1.69	-40.89	0.01
260	SLV 16	-1099	-87	7108	1.69	-40.89	0.01
261	SLU 1	15	-49	1711	1.86	10.45	0
261	SLU 2	14	-52	1691	2.07	10.25	0
261	SLU 3	15	-52	1751	1.99	10.82	0
261	SLU 4	15	-54	1738	2.12	10.7	0
261	SLU 5	15	-55	1716	2.15	10.48	0
261	SLU 6	15	-54	1776	2.07	11.04	0
261	SLU 7	15	-56	1763	2.2	10.92	0
261	SLU 8	15	-53	1761	2.02	10.9	0
261	SLU 9	15	-55	1749	2.15	10.78	0
261	SLU 10	17	-66	1865	2.62	11.84	0
261	SLU 11	17	-66	1925	2.54	12.41	0
261	SLU 12	17	-68	1913	2.66	12.29	0
261	SLU 13	17	-69	1890	2.7	12.07	0
261	SLU 14	18	-68	1950	2.62	12.63	0
261	SLU 15	17	-70	1938	2.74	12.51	0
261	SLU 16	17	-67	1935	2.57	12.49	0
261	SLU 17	17	-69	1923	2.69	12.37	0
261	SLU 18	18	-68	1960	2.65	12.72	0
261	SLU 19	18	-71	1948	2.77	12.6	0
261	SLU 20	18	-70	1985	2.73	12.95	0
261	SLU 21	18	-73	1973	2.85	12.83	0
261	SLU 22	17	-61	1888	2.36	12.06	0
261	SLU 23	17	-65	1867	2.57	11.86	0
261	SLU 24	17	-65	1928	2.49	12.43	0
261	SLU 25	17	-67	1915	2.62	12.31	0
261	SLU 26	17	-67	1892	2.65	12.09	0
261	SLU 27	18	-67	1953	2.57	12.65	0
261	SLU 28	17	-69	1940	2.69	12.53	0
261	SLU 29	17	-66	1938	2.52	12.51	0
261	SLU 30	17	-68	1926	2.65	12.39	0
261	SLU 31	19	-79	2042	3.11	13.45	0
261	SLU 32	20	-78	2102	3.04	14.02	0
261	SLU 33	19	-81	2090	3.16	13.9	0
261	SLU 34	19	-81	2067	3.19	13.68	0
261	SLU 35	20	-81	2127	3.12	14.24	0
261	SLU 36	20	-83	2115	3.24	14.12	0
261	SLU 37	20	-79	2112	3.07	14.1	0
261	SLU 38	19	-82	2100	3.19	13.98	0
261	SLU 39	20	-81	2137	3.14	14.33	0
261	SLU 40	20	-83	2125	3.27	14.21	0
261	SLU 41	20	-83	2162	3.22	14.56	0
261	SLU 42	20	-86	2150	3.35	14.44	0
261	SLU 43	18	-59	2164	2.25	13.04	0
261	SLU 44	18	-63	2143	2.46	12.84	0
261	SLU 45	19	-62	2204	2.38	13.4	0
261	SLU 46	19	-64	2191	2.51	13.28	0
261	SLU 47	18	-65	2168	2.54	13.06	0
261	SLU 48	19	-64	2229	2.46	13.63	0
261	SLU 49	19	-67	2216	2.59	13.51	0
261	SLU 50	19	-63	2214	2.41	13.49	0
261	SLU 51	19	-65	2201	2.54	13.37	0
261	SLU 52	20	-77	2317	3	14.43	0
261	SLU 53	21	-76	2378	2.93	14.99	0
261	SLU 54	21	-78	2365	3.05	14.87	0
261	SLU 55	20	-79	2342	3.08	14.65	0
261	SLU 56	21	-78	2403	3.01	15.22	0
261	SLU 57	21	-80	2390	3.13	15.1	0
261	SLU 58	21	-77	2388	2.96	15.08	0
261	SLU 59	21	-79	2376	3.08	14.96	0
261	SLU 60	21	-79	2413	3.04	15.31	0
261	SLU 61	21	-81	2400	3.16	15.19	0
261	SLU 62	22	-81	2438	3.11	15.53	0
261	SLU 63	21	-83	2425	3.24	15.41	0
261	SLU 64	20	-71	2341	2.75	14.65	0
261	SLU 65	20	-75	2320	2.96	14.45	0
261	SLU 66	21	-75	2380	2.88	15.01	0
261	SLU 67	21	-77	2368	3	14.89	0
261	SLU 68	20	-78	2345	3.04	14.67	0
261	SLU 69	21	-77	2405	2.96	15.24	0
261	SLU 70	21	-79	2393	3.08	15.12	0
261	SLU 71	21	-76	2391	2.91	15.1	0
261	SLU 72	21	-78	2378	3.03	14.98	0
261	SLU 73	22	-89	2494	3.5	16.04	0
261	SLU 74	23	-89	2555	3.43	16.6	0

Nodo	Cont.	Reazione a traslazione			Reazione a rotazione		
Ind.	N.br.	x	y	z	x	y	z
261	SLU 75	23	-91	2542	3.55	16.48	0
261	SLU 76	23	-91	2519	3.58	16.26	0
261	SLU 77	23	-91	2580	3.51	16.83	0
261	SLU 78	23	-93	2567	3.63	16.71	0
261	SLU 79	23	-90	2565	3.46	16.69	0
261	SLU 80	23	-92	2553	3.58	16.57	0
261	SLU 81	24	-91	2590	3.53	16.92	0
261	SLU 82	23	-94	2577	3.66	16.8	0
261	SLU 83	24	-93	2615	3.61	17.14	0
261	SLU 84	24	-96	2602	3.74	17.02	0
261	SLE RA 1	15	-52	1762	2.01	10.91	0
261	SLE RA 2	15	-55	1748	2.14	10.78	0
261	SLE RA 3	16	-54	1788	2.09	11.16	0
261	SLE RA 4	15	-56	1780	2.18	11.08	0
261	SLE RA 5	15	-56	1765	2.2	10.93	0
261	SLE RA 6	16	-56	1805	2.15	11.31	0
261	SLE RA 7	16	-57	1797	2.23	11.23	0
261	SLE RA 8	16	-55	1795	2.11	11.21	0
261	SLE RA 9	16	-57	1787	2.2	11.13	0
261	SLE RA 10	17	-64	1864	2.51	11.84	0
261	SLE RA 11	17	-64	1904	2.46	12.22	0
261	SLE RA 12	17	-65	1896	2.54	12.14	0
261	SLE RA 13	17	-65	1881	2.56	11.99	0
261	SLE RA 14	17	-65	1921	2.51	12.37	0
261	SLE RA 15	17	-67	1913	2.59	12.29	0
261	SLE RA 16	17	-64	1911	2.48	12.27	0
261	SLE RA 17	17	-66	1903	2.56	12.19	0
261	SLE RA 18	17	-65	1928	2.53	12.43	0
261	SLE RA 19	17	-67	1919	2.61	12.35	0
261	SLE RA 20	18	-67	1944	2.58	12.58	0
261	SLE RA 21	17	-68	1936	2.66	12.5	0
261	SLE FR 1	15	-52	1762	2.01	10.91	0
261	SLE FR 2	15	-53	1759	2.03	10.89	0
261	SLE FR 3	15	-53	1768	2.03	10.97	0
261	SLE FR 4	16	-57	1809	2.19	11.34	0
261	SLE FR 5	16	-57	1818	2.18	11.43	0
261	SLE FR 6	16	-59	1845	2.27	11.67	0
261	SLE QP 1	15	-52	1762	2.01	10.91	0
261	SLE QP 2	16	-56	1812	2.16	11.37	0
261	SLD 1	11	-55	1721	2.15	19.06	0
261	SLD 2	11	-55	1721	2.15	19.06	0
261	SLD 3	8	-434	1279	19.46	15.85	0.01
261	SLD 4	8	-434	1279	19.46	15.85	0.01
261	SLD 5	19	519	2455	-24.09	18.53	0
261	SLD 6	19	519	2455	-24.09	18.53	0
261	SLD 7	9	-744	982	33.61	7.86	0
261	SLD 8	9	-744	982	33.61	7.86	0
261	SLD 9	23	632	2641	-29.28	14.88	0
261	SLD 10	23	632	2641	-29.28	14.88	0
261	SLD 11	13	-631	1168	28.42	4.2	0
261	SLD 12	13	-631	1168	28.42	4.2	0
261	SLD 13	24	322	2344	-15.14	6.88	0
261	SLD 14	24	322	2344	-15.14	6.88	0
261	SLD 15	21	-57	1902	2.17	3.68	0
261	SLD 16	21	-57	1902	2.17	3.68	0
261	SLV 1	4	-54	1598	2.14	29.67	0.01
261	SLV 2	4	-54	1598	2.14	29.67	0.01
261	SLV 3	-3	-948	553	42.97	21.73	0.01
261	SLV 4	-3	-948	553	42.97	21.73	0.01
261	SLV 5	24	1300	3334	-59.77	28.9	0
261	SLV 6	24	1300	3334	-59.77	28.9	0
261	SLV 7	-1	-1680	-152	76.33	2.44	0.01
261	SLV 8	-1	-1680	-152	76.33	2.44	0.01
261	SLV 9	33	1567	3775	-72	20.3	-0.01
261	SLV 10	33	1567	3775	-72	20.3	-0.01
261	SLV 11	8	-1413	290	64.09	-6.17	0
261	SLV 12	8	-1413	290	64.09	-6.17	0
261	SLV 13	35	836	3070	-38.64	1	-0.01
261	SLV 14	35	836	3070	-38.64	1	-0.01
261	SLV 15	27	-58	2025	2.19	-6.94	-0.01
261	SLV 16	27	-58	2025	2.19	-6.94	-0.01
262	SLU 1	10	-354	4759	14.81	7.12	0
262	SLU 2	11	-261	4666	10.87	8.53	0
262	SLU 3	10	-364	4927	15.24	7.41	0
262	SLU 4	11	-308	4871	12.88	8.26	0
262	SLU 5	11	-265	4792	11.06	8.75	0
262	SLU 6	10	-368	5054	15.44	7.63	0
262	SLU 7	11	-312	4997	13.08	8.47	0
262	SLU 8	10	-362	5013	15.19	7.56	0
262	SLU 9	11	-306	4956	12.83	8.4	0
262	SLU 10	12	-309	5184	12.86	9.42	0
262	SLU 11	11	-411	5445	17.23	8.3	0
262	SLU 12	12	-356	5389	14.87	9.14	0
262	SLU 13	12	-313	5311	13.05	9.64	0
262	SLU 14	11	-415	5572	17.43	8.52	0
262	SLU 15	12	-360	5516	15.06	9.36	0
262	SLU 16	11	-409	5531	17.18	8.45	0
262	SLU 17	12	-354	5475	14.82	9.29	0
262	SLU 18	11	-422	5500	17.65	8.39	0
262	SLU 19	12	-366	5444	15.29	9.24	0
262	SLU 20	12	-426	5626	17.84	8.61	0

Nodo	Cont.	Reazione a traslazione			Reazione a rotazione		
Ind.	N.br.	x	y	z	x	y	z
262	SLU 21	12	-370	5570	15.48	9.46	0
262	SLU 22	11	-400	5282	16.76	8.01	0
262	SLU 23	12	-308	5188	12.83	9.42	0
262	SLU 24	11	-410	5449	17.2	8.3	0
262	SLU 25	12	-355	5393	14.84	9.14	0
262	SLU 26	12	-312	5315	13.02	9.64	0
262	SLU 27	11	-414	5576	17.39	8.52	0
262	SLU 28	12	-359	5520	15.03	9.36	0
262	SLU 29	11	-408	5535	17.14	8.45	0
262	SLU 30	12	-353	5479	14.78	9.29	0
262	SLU 31	13	-355	5706	14.81	10.31	0
262	SLU 32	12	-458	5968	19.19	9.19	0
262	SLU 33	13	-402	5911	16.83	10.03	0
262	SLU 34	13	-359	5833	15.01	10.53	0
262	SLU 35	13	-462	6094	19.38	9.41	-0.01
262	SLU 36	13	-406	6038	17.02	10.25	-0.01
262	SLU 37	12	-456	6053	19.13	9.34	0
262	SLU 38	13	-400	5997	16.77	10.18	-0.01
262	SLU 39	12	-469	6022	19.6	9.28	0
262	SLU 40	13	-413	5966	17.24	10.13	-0.01
262	SLU 41	13	-473	6149	19.79	9.5	-0.01
262	SLU 42	13	-417	6092	17.43	10.34	-0.01
262	SLU 43	12	-444	6008	18.58	8.96	0
262	SLU 44	13	-351	5914	14.64	10.36	0
262	SLU 45	12	-454	6176	19.02	9.24	0
262	SLU 46	13	-398	6119	16.66	10.09	-0.01
262	SLU 47	13	-355	6041	14.84	10.58	-0.01
262	SLU 48	13	-458	6302	19.21	9.46	-0.01
262	SLU 49	13	-402	6246	16.85	10.31	-0.01
262	SLU 50	13	-452	6261	18.96	9.39	-0.01
262	SLU 51	13	-396	6205	16.6	10.24	-0.01
262	SLU 52	14	-399	6433	16.63	11.25	-0.01
262	SLU 53	14	-502	6694	21.01	10.13	-0.01
262	SLU 54	14	-446	6638	18.65	10.98	-0.01
262	SLU 55	14	-403	6559	16.83	11.47	-0.01
262	SLU 56	14	-506	6821	21.2	10.35	-0.01
262	SLU 57	14	-450	6764	18.84	11.2	-0.01
262	SLU 58	14	-499	6780	20.95	10.28	-0.01
262	SLU 59	14	-444	6723	18.59	11.13	-0.01
262	SLU 60	14	-512	6748	21.42	10.23	-0.01
262	SLU 61	14	-457	6692	19.06	11.07	-0.01
262	SLU 62	14	-516	6875	21.61	10.45	-0.01
262	SLU 63	15	-460	6819	19.25	11.29	-0.01
262	SLU 64	13	-491	6530	20.53	9.84	-0.01
262	SLU 65	14	-398	6437	16.6	11.25	-0.01
262	SLU 66	14	-501	6698	20.97	10.13	-0.01
262	SLU 67	14	-445	6642	18.61	10.98	-0.01
262	SLU 68	15	-402	6563	16.79	11.47	-0.01
262	SLU 69	14	-504	6825	21.16	10.35	-0.01
262	SLU 70	14	-449	6768	18.8	11.19	-0.01
262	SLU 71	14	-498	6784	20.91	10.28	-0.01
262	SLU 72	14	-443	6727	18.55	11.12	-0.01
262	SLU 73	15	-446	6955	18.59	12.14	-0.01
262	SLU 74	15	-548	7216	22.96	11.02	-0.01
262	SLU 75	15	-493	7160	20.6	11.86	-0.01
262	SLU 76	16	-450	7082	18.78	12.36	-0.01
262	SLU 77	15	-552	7343	23.15	11.24	-0.01
262	SLU 78	16	-497	7287	20.79	12.08	-0.01
262	SLU 79	15	-546	7302	22.9	11.17	-0.01
262	SLU 80	16	-490	7246	20.54	12.01	-0.01
262	SLU 81	15	-559	7271	23.37	11.11	-0.01
262	SLU 82	15	-503	7215	21.01	11.96	-0.01
262	SLU 83	15	-563	7397	23.57	11.33	-0.01
262	SLU 84	16	-507	7341	21.2	12.18	-0.01
262	SLE RA 1	10	-367	4909	15.36	7.38	0
262	SLE RA 2	11	-305	4846	12.74	8.32	0
262	SLE RA 3	10	-374	5020	15.66	7.57	0
262	SLE RA 4	11	-337	4983	14.08	8.13	0
262	SLE RA 5	11	-308	4930	12.87	8.46	0
262	SLE RA 6	10	-376	5105	15.78	7.71	0
262	SLE RA 7	11	-339	5067	14.21	8.28	0
262	SLE RA 8	10	-372	5077	15.62	7.67	0
262	SLE RA 9	11	-335	5040	14.05	8.23	0
262	SLE RA 10	11	-337	5192	14.07	8.91	0
262	SLE RA 11	11	-406	5366	16.98	8.16	0
262	SLE RA 12	11	-368	5328	15.41	8.72	0
262	SLE RA 13	12	-340	5276	14.2	9.05	0
262	SLE RA 14	11	-408	5450	17.11	8.31	0
262	SLE RA 15	12	-371	5413	15.54	8.87	0
262	SLE RA 16	11	-404	5423	16.95	8.26	0
262	SLE RA 17	11	-367	5385	15.37	8.82	0
262	SLE RA 18	11	-413	5402	17.26	8.22	0
262	SLE RA 19	11	-375	5365	15.69	8.79	0
262	SLE RA 20	11	-415	5487	17.39	8.37	0
262	SLE RA 21	12	-378	5449	15.81	8.93	0
262	SLE FR 1	10	-367	4909	15.36	7.38	0
262	SLE FR 2	10	-355	4896	14.84	7.57	0
262	SLE FR 3	10	-368	4942	15.42	7.44	0
262	SLE FR 4	10	-368	5044	15.41	7.82	0
262	SLE FR 5	10	-382	5090	15.98	7.69	0
262	SLE FR 6	10	-390	5155	16.31	7.8	0

Nodo	Cont.	Reazione a traslazione			Reazione a rotazione		
Ind.	N.br.	x	y	z	x	y	z
262	SLE QP 1	10	-367	4909	15.36	7.38	0
262	SLE QP 2	10	-381	5057	15.93	7.63	0
262	SLD 1	26	-221	5951	8.82	22.89	-0.02
262	SLD 2	26	-221	5951	8.82	22.89	-0.02
262	SLD 3	34	-765	6367	32.05	31.63	-0.01
262	SLD 4	34	-765	6367	32.05	31.63	-0.01
262	SLD 5	3	492	4694	-21.44	-1.03	-0.01
262	SLD 6	3	492	4694	-21.44	-1.03	-0.01
262	SLD 7	29	-1321	6081	56.01	28.08	0
262	SLD 8	29	-1321	6081	56.01	28.08	0
262	SLD 9	-9	559	4032	-24.14	-12.81	-0.01
262	SLD 10	-9	559	4032	-24.14	-12.81	-0.01
262	SLD 11	17	-1254	5419	53.31	16.3	0.01
262	SLD 12	17	-1254	5419	53.31	16.3	0.01
262	SLD 13	-14	3	3746	-0.19	-16.36	0.01
262	SLD 14	-14	3	3746	-0.19	-16.36	0.01
262	SLD 15	-6	-540	4162	23.05	-7.63	0.01
262	SLD 16	-6	-540	4162	23.05	-7.63	0.01
262	SLV 1	48	-13	7101	-0.46	43.53	-0.04
262	SLV 2	48	-13	7101	-0.46	43.53	-0.04
262	SLV 3	68	-1280	8082	53.67	65.47	-0.03
262	SLV 4	68	-1280	8082	53.67	65.47	-0.03
262	SLV 5	-8	1651	4183	-71.08	-14.88	-0.03
262	SLV 6	-8	1651	4183	-71.08	-14.88	-0.03
262	SLV 7	57	-2572	7451	109.35	58.26	0
262	SLV 8	57	-2572	7451	109.35	58.26	0
262	SLV 9	-37	1811	2662	-77.48	-43	-0.01
262	SLV 10	-37	1811	2662	-77.48	-43	-0.01
262	SLV 11	28	-2413	5930	102.95	30.14	0.02
262	SLV 12	28	-2413	5930	102.95	30.14	0.02
262	SLV 13	-47	518	2031	-21.81	-50.21	0.02
262	SLV 14	-47	518	2031	-21.81	-50.21	0.02
262	SLV 15	-28	-749	3012	32.32	-28.26	0.03
262	SLV 16	-28	-749	3012	32.32	-28.26	0.03
263	SLU 1	11	-591	5200	23.97	7.66	0
263	SLU 2	10	-481	5086	19.35	5.99	0
263	SLU 3	12	-612	5385	24.84	7.95	0
263	SLU 4	11	-546	5317	22.07	6.95	0
263	SLU 5	10	-495	5224	19.92	6.21	0
263	SLU 6	12	-625	5523	25.41	8.17	0
263	SLU 7	11	-560	5455	22.64	7.17	0
263	SLU 8	12	-618	5476	25.1	8.09	0
263	SLU 9	11	-552	5408	22.33	7.09	0
263	SLU 10	11	-569	5677	22.89	6.98	0
263	SLU 11	13	-700	5976	28.38	8.94	0
263	SLU 12	13	-634	5908	25.61	7.94	0
263	SLU 13	12	-583	5816	23.46	7.2	0
263	SLU 14	14	-713	6114	28.95	9.16	0
263	SLU 15	13	-648	6046	26.18	8.16	0
263	SLU 16	14	-706	6068	28.64	9.08	0
263	SLU 17	13	-640	5999	25.87	8.08	0
263	SLU 18	14	-716	6044	29.03	9.07	0
263	SLU 19	13	-651	5976	26.26	8.07	0
263	SLU 20	14	-730	6183	29.59	9.29	0
263	SLU 21	13	-664	6114	26.82	8.29	0
263	SLU 22	13	-675	5790	27.38	8.64	0
263	SLU 23	11	-566	5676	22.76	6.97	0
263	SLU 24	13	-696	5975	28.25	8.93	0
263	SLU 25	13	-631	5907	25.48	7.93	0
263	SLU 26	12	-579	5815	23.33	7.19	0
263	SLU 27	14	-710	6114	28.82	9.15	0
263	SLU 28	13	-644	6045	26.05	8.15	0
263	SLU 29	14	-702	6067	28.51	9.07	0
263	SLU 30	13	-636	5999	25.74	8.07	0
263	SLU 31	13	-654	6268	26.31	7.96	0
263	SLU 32	15	-784	6566	31.8	9.92	0
263	SLU 33	14	-719	6498	29.03	8.92	0
263	SLU 34	13	-667	6406	26.87	8.18	0
263	SLU 35	15	-798	6705	32.36	10.14	0
263	SLU 36	14	-732	6636	29.59	9.14	0
263	SLU 37	15	-790	6658	32.05	10.06	0
263	SLU 38	14	-724	6590	29.28	9.06	0
263	SLU 39	15	-801	6635	32.44	10.05	0
263	SLU 40	14	-735	6566	29.67	9.05	0
263	SLU 41	15	-814	6773	33.01	10.27	0
263	SLU 42	15	-749	6705	30.24	9.27	0
263	SLU 43	14	-739	6558	29.99	9.62	0
263	SLU 44	13	-629	6444	25.37	7.95	0
263	SLU 45	15	-760	6743	30.86	9.91	0
263	SLU 46	14	-694	6674	28.09	8.91	0
263	SLU 47	13	-643	6582	25.94	8.17	0
263	SLU 48	15	-774	6881	31.43	10.13	0
263	SLU 49	14	-708	6813	28.66	9.13	0
263	SLU 50	15	-766	6834	31.12	10.05	0
263	SLU 51	14	-700	6766	28.35	9.05	0
263	SLU 52	14	-717	7035	28.91	8.94	0
263	SLU 53	16	-848	7334	34.41	10.9	0
263	SLU 54	15	-782	7265	31.63	9.9	0
263	SLU 55	15	-731	7173	29.48	9.16	0
263	SLU 56	17	-862	7472	34.97	11.12	0
263	SLU 57	16	-796	7404	32.2	10.12	0

Nodo	Cont.	Reazione a traslazione			Reazione a rotazione		
Ind.	N.br.	x	y	z	x	y	z
263	SLU 58	16	-854	7425	34.66	11.04	0
263	SLU 59	16	-788	7357	31.89	10.04	0
263	SLU 60	16	-865	7402	35.05	11.03	0
263	SLU 61	16	-799	7334	32.28	10.03	0
263	SLU 62	17	-878	7540	35.62	11.25	0
263	SLU 63	16	-812	7472	32.85	10.25	0
263	SLU 64	16	-823	7148	33.4	10.6	0
263	SLU 65	14	-714	7034	28.79	8.93	0
263	SLU 66	16	-845	7333	34.28	10.89	0
263	SLU 67	15	-779	7265	31.51	9.89	0
263	SLU 68	15	-727	7172	29.35	9.15	0
263	SLU 69	17	-858	7471	34.84	11.11	0
263	SLU 70	16	-792	7403	32.07	10.11	0
263	SLU 71	16	-850	7424	34.53	11.04	0
263	SLU 72	16	-785	7356	31.76	10.03	0
263	SLU 73	16	-802	7625	32.33	9.92	0
263	SLU 74	18	-933	7924	37.82	11.88	0
263	SLU 75	17	-867	7856	35.05	10.88	0
263	SLU 76	16	-815	7763	32.89	10.14	0
263	SLU 77	18	-946	8062	38.38	12.1	0
263	SLU 78	17	-880	7994	35.61	11.1	0
263	SLU 79	18	-938	8015	38.08	12.02	0
263	SLU 80	17	-873	7947	35.3	11.02	0
263	SLU 81	18	-949	7992	38.46	12.01	0
263	SLU 82	17	-883	7924	35.69	11.01	0
263	SLU 83	18	-963	8131	39.03	12.23	0
263	SLU 84	17	-897	8062	36.26	11.23	0
263	SLE RA 1	12	-615	5369	24.94	7.94	0
263	SLE RA 2	11	-542	5293	21.87	6.83	0
263	SLE RA 3	12	-629	5492	25.53	8.13	0
263	SLE RA 4	12	-585	5446	23.68	7.47	0
263	SLE RA 5	11	-551	5385	22.24	6.97	0
263	SLE RA 6	12	-638	5584	25.9	8.28	0
263	SLE RA 7	12	-594	5539	24.06	7.61	0
263	SLE RA 8	12	-633	5553	25.7	8.23	0
263	SLE RA 9	12	-589	5507	23.85	7.56	0
263	SLE RA 10	12	-600	5687	24.23	7.49	0
263	SLE RA 11	13	-688	5886	27.89	8.79	0
263	SLE RA 12	13	-644	5841	26.04	8.13	0
263	SLE RA 13	12	-609	5779	24.6	7.63	0
263	SLE RA 14	13	-697	5978	28.26	8.94	0
263	SLE RA 15	13	-653	5933	26.42	8.27	0
263	SLE RA 16	13	-692	5947	28.06	8.89	0
263	SLE RA 17	13	-648	5902	26.21	8.22	0
263	SLE RA 18	13	-699	5932	28.32	8.88	0
263	SLE RA 19	13	-655	5886	26.47	8.21	0
263	SLE RA 20	13	-708	6024	28.69	9.03	0
263	SLE RA 21	13	-664	5978	26.85	8.36	0
263	SLE FR 1	12	-615	5369	24.94	7.94	0
263	SLE FR 2	12	-600	5353	24.33	7.72	0
263	SLE FR 3	12	-618	5405	25.1	8	0
263	SLE FR 4	12	-625	5522	25.34	8	0
263	SLE FR 5	12	-644	5574	26.11	8.28	0
263	SLE FR 6	13	-657	5650	26.63	8.41	0
263	SLE QP 1	12	-615	5369	24.94	7.94	0
263	SLE QP 2	12	-640	5537	25.96	8.22	0
263	SLD 1	-7	-155	4057	5.36	22.13	-0.01
263	SLD 2	-7	-155	4057	5.36	22.13	-0.01
263	SLD 3	-1	-739	4380	30.31	28.86	-0.01
263	SLD 4	-1	-739	4380	30.31	28.86	-0.01
263	SLD 5	-3	390	4602	-18.08	2.19	0
263	SLD 6	-3	390	4602	-18.08	2.19	0
263	SLD 7	17	-1555	5681	65.12	24.61	-0.01
263	SLD 8	17	-1555	5681	65.12	24.61	-0.01
263	SLD 9	7	275	5394	-13.2	-8.17	0
263	SLD 10	7	275	5394	-13.2	-8.17	0
263	SLD 11	27	-1670	6473	69.99	14.25	-0.01
263	SLD 12	27	-1670	6473	69.99	14.25	-0.01
263	SLD 13	26	-541	6695	21.6	-12.41	0.01
263	SLD 14	26	-541	6695	21.6	-12.41	0.01
263	SLD 15	32	-1125	7018	46.56	-5.69	0
263	SLD 16	32	-1125	7018	46.56	-5.69	0
263	SLV 1	-35	485	2127	-21.82	41.1	-0.01
263	SLV 2	-35	485	2127	-21.82	41.1	-0.01
263	SLV 3	-20	-876	2892	36.37	57.97	-0.02
263	SLV 4	-20	-876	2892	36.37	57.97	-0.02
263	SLV 5	-25	1760	3355	-76.63	-7.51	0.01
263	SLV 6	-25	1760	3355	-76.63	-7.51	0.01
263	SLV 7	25	-2774	5903	117.33	48.74	-0.02
263	SLV 8	25	-2774	5903	117.33	48.74	-0.02
263	SLV 9	-1	1494	5172	-65.42	-32.3	0.02
263	SLV 10	-1	1494	5172	-65.42	-32.3	0.02
263	SLV 11	49	-3040	7720	128.54	23.96	-0.01
263	SLV 12	49	-3040	7720	128.54	23.96	-0.01
263	SLV 13	44	-404	8183	15.55	-41.53	0.02
263	SLV 14	44	-404	8183	15.55	-41.53	0.02
263	SLV 15	59	-1765	8948	73.73	-24.65	0.01
263	SLV 16	59	-1765	8948	73.73	-24.65	0.01
264	SLU 1	11	59	2707	-2.31	8.49	-0.12
264	SLU 2	10	52	2659	-2.03	8.4	-0.12
264	SLU 3	11	55	2778	-2.18	8.75	-0.12

Nodo	Cont.	Reazione a traslazione			Reazione a rotazione		
Ind.	N.br.	x	y	z	x	y	z
264	SLU 4	11	51	2749	-2.01	8.69	-0.12
264	SLU 5	11	47	2702	-1.86	8.55	-0.12
264	SLU 6	11	49	2821	-2	8.91	-0.12
264	SLU 7	11	45	2792	-1.84	8.85	-0.12
264	SLU 8	11	48	2792	-1.95	8.8	-0.12
264	SLU 9	11	44	2764	-1.79	8.74	-0.12
264	SLU 10	12	57	2984	-2.29	9.64	-0.13
264	SLU 11	13	60	3103	-2.43	10	-0.14
264	SLU 12	12	56	3074	-2.27	9.94	-0.14
264	SLU 13	12	52	3026	-2.11	9.8	-0.14
264	SLU 14	13	55	3146	-2.26	10.15	-0.14
264	SLU 15	13	50	3117	-2.09	10.1	-0.14
264	SLU 16	13	53	3117	-2.21	10.05	-0.14
264	SLU 17	13	49	3088	-2.04	9.99	-0.14
264	SLU 18	13	66	3171	-2.67	10.27	-0.14
264	SLU 19	13	62	3142	-2.51	10.21	-0.14
264	SLU 20	13	61	3213	-2.49	10.42	-0.14
264	SLU 21	13	57	3185	-2.33	10.37	-0.14
264	SLU 22	12	62	3030	-2.51	9.71	-0.13
264	SLU 23	12	55	2982	-2.23	9.62	-0.13
264	SLU 24	13	58	3102	-2.38	9.97	-0.14
264	SLU 25	12	54	3073	-2.21	9.91	-0.14
264	SLU 26	12	50	3025	-2.05	9.77	-0.14
264	SLU 27	13	53	3145	-2.2	10.13	-0.14
264	SLU 28	13	49	3116	-2.03	10.07	-0.14
264	SLU 29	13	52	3116	-2.15	10.02	-0.14
264	SLU 30	13	48	3087	-1.98	9.96	-0.14
264	SLU 31	14	61	3307	-2.49	10.86	-0.15
264	SLU 32	14	63	3426	-2.63	11.22	-0.16
264	SLU 33	14	59	3398	-2.47	11.16	-0.15
264	SLU 34	14	55	3350	-2.31	11.02	-0.15
264	SLU 35	14	58	3469	-2.45	11.37	-0.16
264	SLU 36	14	54	3441	-2.29	11.32	-0.16
264	SLU 37	14	57	3441	-2.4	11.27	-0.16
264	SLU 38	14	53	3412	-2.24	11.21	-0.16
264	SLU 39	14	70	3494	-2.87	11.49	-0.16
264	SLU 40	14	66	3465	-2.7	11.43	-0.16
264	SLU 41	15	64	3537	-2.69	11.64	-0.16
264	SLU 42	15	60	3508	-2.53	11.59	-0.16
264	SLU 43	13	75	3408	-2.93	10.62	-0.15
264	SLU 44	13	68	3360	-2.66	10.52	-0.14
264	SLU 45	14	71	3479	-2.81	10.88	-0.15
264	SLU 46	14	67	3451	-2.64	10.82	-0.15
264	SLU 47	13	63	3403	-2.48	10.68	-0.15
264	SLU 48	14	66	3522	-2.63	11.03	-0.15
264	SLU 49	14	62	3493	-2.46	10.98	-0.15
264	SLU 50	14	65	3493	-2.58	10.93	-0.15
264	SLU 51	14	60	3465	-2.41	10.87	-0.15
264	SLU 52	15	73	3685	-2.91	11.77	-0.16
264	SLU 53	15	76	3804	-3.06	12.12	-0.17
264	SLU 54	15	72	3775	-2.89	12.07	-0.17
264	SLU 55	15	68	3728	-2.74	11.93	-0.16
264	SLU 56	15	71	3847	-2.88	12.28	-0.17
264	SLU 57	15	67	3818	-2.72	12.22	-0.17
264	SLU 58	15	70	3818	-2.83	12.17	-0.17
264	SLU 59	15	66	3790	-2.67	12.12	-0.17
264	SLU 60	16	83	3872	-3.3	12.4	-0.17
264	SLU 61	15	78	3843	-3.13	12.34	-0.17
264	SLU 62	16	77	3915	-3.12	12.55	-0.17
264	SLU 63	16	73	3886	-2.95	12.5	-0.17
264	SLU 64	15	79	3731	-3.13	11.84	-0.16
264	SLU 65	15	72	3683	-2.86	11.74	-0.16
264	SLU 66	15	75	3803	-3	12.1	-0.17
264	SLU 67	15	71	3774	-2.84	12.04	-0.17
264	SLU 68	15	67	3726	-2.68	11.9	-0.16
264	SLU 69	15	69	3846	-2.82	12.25	-0.17
264	SLU 70	15	65	3817	-2.66	12.2	-0.17
264	SLU 71	15	68	3817	-2.78	12.15	-0.17
264	SLU 72	15	64	3788	-2.61	12.09	-0.17
264	SLU 73	16	77	4008	-3.11	12.99	-0.18
264	SLU 74	17	80	4128	-3.26	13.34	-0.18
264	SLU 75	17	76	4099	-3.09	13.29	-0.18
264	SLU 76	16	72	4051	-2.93	13.15	-0.18
264	SLU 77	17	75	4170	-3.08	13.5	-0.19
264	SLU 78	17	70	4142	-2.91	13.44	-0.19
264	SLU 79	17	73	4142	-3.03	13.39	-0.19
264	SLU 80	17	69	4113	-2.86	13.34	-0.18
264	SLU 81	17	86	4195	-3.49	13.62	-0.19
264	SLU 82	17	82	4167	-3.33	13.56	-0.19
264	SLU 83	17	81	4238	-3.32	13.77	-0.19
264	SLU 84	17	77	4209	-3.15	13.72	-0.19
264	SLE RA 1	11	60	2799	-2.37	8.84	-0.12
264	SLE RA 2	11	55	2767	-2.18	8.77	-0.12
264	SLE RA 3	11	57	2847	-2.28	9.01	-0.12
264	SLE RA 4	11	54	2828	-2.17	8.97	-0.12
264	SLE RA 5	11	52	2796	-2.06	8.88	-0.12
264	SLE RA 6	11	54	2875	-2.16	9.11	-0.13
264	SLE RA 7	11	51	2856	-2.05	9.08	-0.13
264	SLE RA 8	11	53	2856	-2.13	9.04	-0.13
264	SLE RA 9	11	50	2837	-2.02	9.01	-0.12
264	SLE RA 10	12	59	2984	-2.35	9.61	-0.13

Nodo	Cont.	Reazione a traslazione			Reazione a rotazione		
Ind.	N.br.	x	y	z	x	y	z
264	SLE RA 11	12	61	3063	-2.45	9.84	-0.14
264	SLE RA 12	12	58	3044	-2.34	9.8	-0.14
264	SLE RA 13	12	55	3012	-2.23	9.71	-0.13
264	SLE RA 14	12	57	3092	-2.33	9.95	-0.14
264	SLE RA 15	12	54	3073	-2.22	9.91	-0.14
264	SLE RA 16	12	56	3073	-2.3	9.87	-0.14
264	SLE RA 17	12	53	3054	-2.19	9.84	-0.14
264	SLE RA 18	13	65	3108	-2.61	10.02	-0.14
264	SLE RA 19	13	62	3089	-2.5	9.99	-0.14
264	SLE RA 20	13	61	3137	-2.49	10.13	-0.14
264	SLE RA 21	13	58	3118	-2.38	10.09	-0.14
264	SLE FR 1	11	60	2799	-2.37	8.84	-0.12
264	SLE FR 2	11	59	2793	-2.33	8.82	-0.12
264	SLE FR 3	11	58	2811	-2.32	8.88	-0.12
264	SLE FR 4	11	60	2886	-2.4	9.18	-0.13
264	SLE FR 5	12	60	2903	-2.39	9.23	-0.13
264	SLE FR 6	12	62	2954	-2.49	9.43	-0.13
264	SLE QP 1	11	60	2799	-2.37	8.84	-0.12
264	SLE QP 2	12	61	2892	-2.44	9.19	-0.13
264	SLD 1	22	125	3378	-4.68	19.24	-0.22
264	SLD 2	22	125	3378	-4.68	19.24	-0.22
264	SLD 3	20	-404	2917	13.64	16.96	-0.2
264	SLD 4	20	-404	2917	13.64	16.96	-0.2
264	SLD 5	18	881	3737	-30.9	15.65	-0.19
264	SLD 6	18	881	3737	-30.9	15.65	-0.19
264	SLD 7	10	-879	2200	30.18	8.08	-0.12
264	SLD 8	10	-879	2200	30.18	8.08	-0.12
264	SLD 9	13	1002	3584	-35.05	10.31	-0.14
264	SLD 10	13	1002	3584	-35.05	10.31	-0.14
264	SLD 11	5	-759	2047	26.03	2.73	-0.06
264	SLD 12	5	-759	2047	26.03	2.73	-0.06
264	SLD 13	3	526	2867	-18.52	1.42	-0.05
264	SLD 14	3	526	2867	-18.52	1.42	-0.05
264	SLD 15	1	-2	2406	-0.19	-0.85	-0.03
264	SLD 16	1	-2	2406	-0.19	-0.85	-0.03
264	SLV 1	37	209	4064	-7.67	33.81	-0.36
264	SLV 2	37	209	4064	-7.67	33.81	-0.36
264	SLV 3	31	-1038	2969	35.62	28.23	-0.31
264	SLV 4	31	-1038	2969	35.62	28.23	-0.31
264	SLV 5	28	1998	4905	-69.66	25.04	-0.28
264	SLV 6	28	1998	4905	-69.66	25.04	-0.28
264	SLV 7	9	-2161	1253	74.63	6.44	-0.1
264	SLV 8	9	-2161	1253	74.63	6.44	-0.1
264	SLV 9	14	2283	4531	-79.5	11.94	-0.15
264	SLV 10	14	2283	4531	-79.5	11.94	-0.15
264	SLV 11	-5	-1875	879	64.78	-6.66	0.03
264	SLV 12	-5	-1875	879	64.78	-6.66	0.03
264	SLV 13	-8	1161	2815	-40.49	-9.85	0.06
264	SLV 14	-8	1161	2815	-40.49	-9.85	0.06
264	SLV 15	-14	-86	1720	2.79	-15.43	0.11
264	SLV 16	-14	-86	1720	2.79	-15.43	0.11
265	SLU 1	0	-28	2918	10.12	1.35	0
265	SLU 2	0	-28	2916	10.14	1.35	0
265	SLU 3	0	-27	2965	10.35	1.38	0
265	SLU 4	0	-27	2964	10.36	1.38	0
265	SLU 5	0	-26	2918	10.19	1.37	0
265	SLU 6	0	-24	2968	10.4	1.4	0
265	SLU 7	0	-24	2966	10.41	1.4	0
265	SLU 8	0	-23	2923	10.22	1.38	0
265	SLU 9	0	-23	2922	10.23	1.38	0
265	SLU 10	0	-45	3363	12.11	1.64	0
265	SLU 11	0	-43	3412	12.33	1.66	0
265	SLU 12	0	-43	3411	12.34	1.67	0
265	SLU 13	0	-42	3365	12.16	1.65	0
265	SLU 14	0	-40	3415	12.38	1.68	0
265	SLU 15	0	-41	3413	12.39	1.68	0
265	SLU 16	0	-39	3370	12.19	1.66	0
265	SLU 17	0	-39	3369	12.21	1.66	0
265	SLU 18	0	-52	3556	12.94	1.76	0
265	SLU 19	0	-52	3555	12.95	1.76	0
265	SLU 20	0	-49	3559	12.99	1.77	0
265	SLU 21	0	-49	3558	13	1.77	0
265	SLU 22	0	-43	3378	12.07	1.61	0
265	SLU 23	0	-43	3376	12.09	1.61	0
265	SLU 24	0	-41	3425	12.3	1.64	0
265	SLU 25	0	-41	3424	12.31	1.64	0
265	SLU 26	0	-40	3379	12.14	1.62	0
265	SLU 27	0	-38	3428	12.35	1.65	0
265	SLU 28	0	-39	3427	12.36	1.65	0
265	SLU 29	0	-37	3383	12.17	1.64	0
265	SLU 30	0	-38	3382	12.18	1.64	0
265	SLU 31	0	-60	3823	14.06	1.89	0
265	SLU 32	0	-58	3872	14.28	1.92	0
265	SLU 33	0	-58	3871	14.29	1.92	0
265	SLU 34	0	-57	3826	14.11	1.91	0
265	SLU 35	0	-55	3875	14.33	1.94	0
265	SLU 36	0	-55	3874	14.34	1.94	0
265	SLU 37	0	-54	3830	14.14	1.92	0
265	SLU 38	0	-54	3829	14.16	1.92	0
265	SLU 39	0	-67	4017	14.89	2.01	0
265	SLU 40	0	-67	4015	14.9	2.01	0

Nodo	Cont.	Reazione a traslazione			Reazione a rotazione		
Ind.	N.br.	x	y	z	x	y	z
265	SLU 41	0	-64	4019	14.94	2.03	0
265	SLU 42	0	-64	4018	14.95	2.03	0
265	SLU 43	0	-32	3635	12.49	1.67	0
265	SLU 44	0	-32	3633	12.51	1.67	0
265	SLU 45	0	-30	3683	12.72	1.7	0
265	SLU 46	0	-30	3682	12.73	1.7	0
265	SLU 47	0	-29	3636	12.55	1.68	0
265	SLU 48	0	-27	3685	12.77	1.71	0
265	SLU 49	0	-27	3684	12.78	1.71	0
265	SLU 50	0	-26	3640	12.59	1.69	0
265	SLU 51	0	-26	3639	12.6	1.69	0
265	SLU 52	0	-48	4081	14.48	1.95	0
265	SLU 53	0	-46	4130	14.7	1.98	0
265	SLU 54	0	-47	4129	14.71	1.98	0
265	SLU 55	0	-46	4083	14.53	1.96	0
265	SLU 56	0	-44	4132	14.75	1.99	0
265	SLU 57	0	-44	4131	14.76	1.99	0
265	SLU 58	0	-43	4087	14.56	1.98	0
265	SLU 59	0	-43	4086	14.57	1.98	0
265	SLU 60	0	-55	4274	15.31	2.07	0
265	SLU 61	0	-55	4273	15.32	2.07	0
265	SLU 62	0	-52	4277	15.36	2.08	0
265	SLU 63	0	-53	4275	15.37	2.08	0
265	SLU 64	0	-46	4096	14.44	1.93	0
265	SLU 65	0	-47	4094	14.45	1.93	0
265	SLU 66	0	-45	4143	14.67	1.96	0
265	SLU 67	0	-45	4142	14.68	1.96	0
265	SLU 68	0	-44	4096	14.5	1.94	0
265	SLU 69	0	-42	4145	14.72	1.97	0
265	SLU 70	0	-42	4144	14.73	1.97	0
265	SLU 71	0	-41	4101	14.54	1.95	0
265	SLU 72	0	-41	4099	14.55	1.95	0
265	SLU 73	0	-63	4541	16.43	2.21	0
265	SLU 74	0	-61	4590	16.65	2.24	0
265	SLU 75	0	-61	4589	16.66	2.24	0
265	SLU 76	0	-60	4543	16.48	2.22	0
265	SLU 77	0	-58	4592	16.7	2.25	0
265	SLU 78	0	-59	4591	16.71	2.25	0
265	SLU 79	0	-57	4548	16.51	2.24	0
265	SLU 80	0	-58	4546	16.52	2.24	0
265	SLU 81	0	-70	4734	17.26	2.33	0
265	SLU 82	0	-70	4733	17.27	2.33	0
265	SLU 83	0	-67	4737	17.31	2.34	0
265	SLU 84	0	-67	4736	17.32	2.34	0
265	SLE RA 1	0	-32	3049	10.68	1.43	0
265	SLE RA 2	0	-33	3048	10.69	1.43	0
265	SLE RA 3	0	-31	3081	10.83	1.45	0
265	SLE RA 4	0	-31	3080	10.84	1.45	0
265	SLE RA 5	0	-31	3050	10.72	1.44	0
265	SLE RA 6	0	-29	3083	10.86	1.46	0
265	SLE RA 7	0	-30	3082	10.87	1.46	0
265	SLE RA 8	0	-29	3053	10.74	1.44	0
265	SLE RA 9	0	-29	3052	10.75	1.44	0
265	SLE RA 10	0	-44	3346	12.01	1.62	0
265	SLE RA 11	0	-42	3379	12.15	1.64	0
265	SLE RA 12	0	-42	3378	12.16	1.64	0
265	SLE RA 13	0	-42	3348	12.04	1.62	0
265	SLE RA 14	0	-40	3381	12.18	1.64	0
265	SLE RA 15	0	-41	3380	12.19	1.64	0
265	SLE RA 16	0	-40	3351	12.06	1.63	0
265	SLE RA 17	0	-40	3350	12.07	1.63	0
265	SLE RA 18	0	-48	3475	12.56	1.7	0
265	SLE RA 19	0	-48	3474	12.57	1.7	0
265	SLE RA 20	0	-46	3477	12.59	1.7	0
265	SLE RA 21	0	-46	3476	12.6	1.7	0
265	SLE FR 1	0	-32	3049	10.68	1.43	0
265	SLE FR 2	0	-32	3049	10.68	1.43	0
265	SLE FR 3	0	-32	3050	10.69	1.43	0
265	SLE FR 4	0	-37	3177	11.24	1.51	0
265	SLE FR 5	0	-36	3178	11.25	1.51	0
265	SLE FR 6	0	-40	3262	11.62	1.56	0
265	SLE QP 1	0	-32	3049	10.68	1.43	0
265	SLE QP 2	0	-37	3177	11.24	1.51	0
265	SLD 1	0	-29	4565	10.14	1.39	0.01
265	SLD 2	0	-29	4565	10.14	1.39	0.01
265	SLD 3	4	-342	3832	24.01	3.05	0
265	SLD 4	4	-342	3832	24.01	3.05	0
265	SLD 5	-7	440	4704	-10.11	-1.03	0.01
265	SLD 6	-7	440	4704	-10.11	-1.03	0.01
265	SLD 7	8	-603	2262	36.1	4.48	0
265	SLD 8	8	-603	2262	36.1	4.48	0
265	SLD 9	-8	529	4092	-13.61	-1.46	0.01
265	SLD 10	-8	529	4092	-13.61	-1.46	0.01
265	SLD 11	7	-514	1650	32.6	4.05	-0.01
265	SLD 12	7	-514	1650	32.6	4.05	-0.01
265	SLD 13	-4	267	2522	-1.52	-0.03	0
265	SLD 14	-4	267	2522	-1.52	-0.03	0
265	SLD 15	0	-45	1790	12.34	1.62	-0.01
265	SLD 16	0	-45	1790	12.34	1.62	-0.01
265	SLV 1	-1	-5	6481	8.21	1.14	0.02
265	SLV 2	-1	-5	6481	8.21	1.14	0.02

Nodo	Cont.	Reazione a traslazione			Reazione a rotazione		
Ind.	N.br.	x	y	z	x	y	z
265	SLV 3	10	-745	4734	41.04	5.26	0.01
265	SLV 4	10	-745	4734	41.04	5.26	0.01
265	SLV 5	-17	1095	6817	-39.47	-4.85	0.02
265	SLV 6	-17	1095	6817	-39.47	-4.85	0.02
265	SLV 7	19	-1372	996	69.99	8.88	-0.01
265	SLV 8	19	-1372	996	69.99	8.88	-0.01
265	SLV 9	-20	1298	5358	-47.5	-5.87	0.02
265	SLV 10	-20	1298	5358	-47.5	-5.87	0.02
265	SLV 11	17	-1169	-462	61.96	7.87	-0.02
265	SLV 12	17	-1169	-462	61.96	7.87	-0.02
265	SLV 13	-10	671	1620	-18.56	-2.24	0
265	SLV 14	-10	671	1620	-18.56	-2.24	0
265	SLV 15	1	-69	-127	14.28	1.88	-0.02
265	SLV 16	1	-69	-127	14.28	1.88	-0.02
266	SLU 1	-1	34	3047	-0.91	-1.84	0
266	SLU 2	-1	35	3045	-0.92	-1.84	0
266	SLU 3	-2	38	3102	-1.05	-1.88	0
266	SLU 4	-2	38	3101	-1.06	-1.88	0
266	SLU 5	-1	39	3054	-1.09	-1.85	0
266	SLU 6	-2	42	3112	-1.21	-1.89	0
266	SLU 7	-2	42	3111	-1.22	-1.89	0
266	SLU 8	-2	42	3065	-1.24	-1.86	0
266	SLU 9	-2	42	3064	-1.25	-1.86	0
266	SLU 10	-2	27	3527	-0.62	-2.24	0
266	SLU 11	-2	30	3585	-0.75	-2.28	0
266	SLU 12	-2	31	3583	-0.76	-2.28	0
266	SLU 13	-2	31	3536	-0.79	-2.25	0
266	SLU 14	-2	35	3594	-0.91	-2.29	0
266	SLU 15	-2	35	3593	-0.92	-2.29	0
266	SLU 16	-2	35	3548	-0.94	-2.26	0
266	SLU 17	-2	35	3546	-0.95	-2.26	0
266	SLU 18	-2	24	3736	-0.48	-2.41	0
266	SLU 19	-2	24	3734	-0.49	-2.41	0
266	SLU 20	-2	28	3745	-0.65	-2.42	0
266	SLU 21	-2	28	3744	-0.66	-2.42	0
266	SLU 22	-2	30	3534	-0.68	-2.22	0
266	SLU 23	-2	30	3532	-0.7	-2.22	0
266	SLU 24	-2	34	3589	-0.82	-2.26	0
266	SLU 25	-2	34	3588	-0.83	-2.26	0
266	SLU 26	-2	34	3541	-0.87	-2.23	0
266	SLU 27	-2	38	3599	-0.99	-2.27	0
266	SLU 28	-2	38	3598	-1	-2.27	0
266	SLU 29	-2	38	3552	-1.01	-2.24	0
266	SLU 30	-2	38	3551	-1.02	-2.24	0
266	SLU 31	-2	23	4014	-0.4	-2.62	0
266	SLU 32	-2	26	4072	-0.52	-2.66	0
266	SLU 33	-2	27	4070	-0.53	-2.66	0
266	SLU 34	-2	27	4023	-0.57	-2.63	0
266	SLU 35	-2	30	4081	-0.69	-2.67	0
266	SLU 36	-2	31	4080	-0.7	-2.67	0
266	SLU 37	-2	31	4035	-0.72	-2.64	0
266	SLU 38	-2	31	4033	-0.72	-2.64	0
266	SLU 39	-3	19	4223	-0.26	-2.79	0
266	SLU 40	-3	20	4221	-0.27	-2.79	0
266	SLU 41	-3	23	4232	-0.42	-2.8	0
266	SLU 42	-3	24	4231	-0.43	-2.8	0
266	SLU 43	-2	46	3794	-1.26	-2.27	0
266	SLU 44	-2	46	3792	-1.27	-2.26	0
266	SLU 45	-2	49	3849	-1.4	-2.3	0
266	SLU 46	-2	50	3848	-1.4	-2.3	0
266	SLU 47	-2	50	3801	-1.44	-2.27	0
266	SLU 48	-2	53	3859	-1.56	-2.32	0
266	SLU 49	-2	54	3858	-1.57	-2.31	0
266	SLU 50	-2	54	3813	-1.59	-2.29	0
266	SLU 51	-2	54	3811	-1.6	-2.29	0
266	SLU 52	-2	39	4274	-0.97	-2.66	0
266	SLU 53	-2	42	4332	-1.1	-2.7	0
266	SLU 54	-2	42	4330	-1.11	-2.7	0
266	SLU 55	-2	43	4283	-1.14	-2.67	0
266	SLU 56	-2	46	4341	-1.26	-2.72	0
266	SLU 57	-2	46	4340	-1.27	-2.71	0
266	SLU 58	-2	46	4295	-1.29	-2.69	0
266	SLU 59	-2	47	4293	-1.3	-2.69	0
266	SLU 60	-2	35	4483	-0.83	-2.84	0
266	SLU 61	-2	36	4481	-0.84	-2.84	0
266	SLU 62	-2	39	4492	-0.99	-2.85	0
266	SLU 63	-2	40	4491	-1	-2.85	0
266	SLU 64	-2	41	4281	-1.03	-2.64	0
266	SLU 65	-2	42	4279	-1.05	-2.64	0
266	SLU 66	-2	45	4336	-1.17	-2.68	0
266	SLU 67	-2	46	4335	-1.18	-2.68	0
266	SLU 68	-2	46	4288	-1.21	-2.65	0
266	SLU 69	-2	49	4346	-1.34	-2.69	0
266	SLU 70	-2	50	4345	-1.35	-2.69	0
266	SLU 71	-2	49	4300	-1.36	-2.66	0
266	SLU 72	-2	50	4298	-1.37	-2.66	0
266	SLU 73	-3	35	4761	-0.75	-3.04	0
266	SLU 74	-3	38	4819	-0.87	-3.08	0
266	SLU 75	-3	38	4817	-0.88	-3.08	0
266	SLU 76	-3	39	4770	-0.92	-3.05	0
266	SLU 77	-3	42	4828	-1.04	-3.09	0

Nodo	Cont.	Reazione a traslazione			Reazione a rotazione		
Ind.	N.br.	x	y	z	x	y	z
266	SLU 78	-3	42	4827	-1.05	-3.09	0
266	SLU 79	-3	42	4782	-1.06	-3.06	0
266	SLU 80	-3	42	4780	-1.07	-3.06	0
266	SLU 81	-3	31	4970	-0.61	-3.21	0
266	SLU 82	-3	31	4968	-0.62	-3.21	0
266	SLU 83	-3	35	4979	-0.77	-3.22	0
266	SLU 84	-3	35	4978	-0.78	-3.22	0
266	SLE RA 1	-2	33	3186	-0.84	-1.95	0
266	SLE RA 2	-2	33	3184	-0.85	-1.95	0
266	SLE RA 3	-2	35	3223	-0.94	-1.98	0
266	SLE RA 4	-2	36	3222	-0.94	-1.98	0
266	SLE RA 5	-2	36	3191	-0.96	-1.96	0
266	SLE RA 6	-2	38	3229	-1.05	-1.98	0
266	SLE RA 7	-2	38	3228	-1.05	-1.98	0
266	SLE RA 8	-2	38	3198	-1.06	-1.96	0
266	SLE RA 9	-2	38	3198	-1.07	-1.96	0
266	SLE RA 10	-2	28	3506	-0.66	-2.22	0
266	SLE RA 11	-2	30	3544	-0.74	-2.24	0
266	SLE RA 12	-2	31	3544	-0.74	-2.24	0
266	SLE RA 13	-2	31	3512	-0.77	-2.22	0
266	SLE RA 14	-2	33	3551	-0.85	-2.25	0
266	SLE RA 15	-2	33	3550	-0.85	-2.25	0
266	SLE RA 16	-2	33	3520	-0.86	-2.23	0
266	SLE RA 17	-2	34	3519	-0.87	-2.23	0
266	SLE RA 18	-2	26	3645	-0.56	-2.33	0
266	SLE RA 19	-2	26	3644	-0.57	-2.33	0
266	SLE RA 20	-2	29	3651	-0.67	-2.34	0
266	SLE RA 21	-2	29	3651	-0.68	-2.34	0
266	SLE FR 1	-2	33	3186	-0.84	-1.95	0
266	SLE FR 2	-2	33	3186	-0.85	-1.95	0
266	SLE FR 3	-2	34	3188	-0.89	-1.95	0
266	SLE FR 4	-2	31	3323	-0.76	-2.06	0
266	SLE FR 5	-2	32	3326	-0.8	-2.07	0
266	SLE FR 6	-2	29	3415	-0.7	-2.14	0
266	SLE QP 1	-2	33	3186	-0.84	-1.95	0
266	SLE QP 2	-2	31	3324	-0.76	-2.06	0
266	SLD 1	1	387	2805	-14.91	-0.49	0
266	SLD 2	1	387	2805	-14.91	-0.49	0
266	SLD 3	-3	-43	2102	3.23	-2.06	0.01
266	SLD 4	-3	-43	2102	3.23	-2.06	0.01
266	SLD 5	5	790	4235	-32.52	0.8	0
266	SLD 6	5	790	4235	-32.52	0.8	0
266	SLD 7	-8	-644	1890	27.96	-4.45	0.01
266	SLD 8	-8	-644	1890	27.96	-4.45	0.01
266	SLD 9	5	706	4758	-29.47	0.32	-0.01
266	SLD 10	5	706	4758	-29.47	0.32	-0.01
266	SLD 11	-9	-729	2412	31	-4.93	0.01
266	SLD 12	-9	-729	2412	31	-4.93	0.01
266	SLD 13	-1	105	4546	-4.75	-2.07	-0.01
266	SLD 14	-1	105	4546	-4.75	-2.07	-0.01
266	SLD 15	-5	-326	3842	13.39	-3.64	0
266	SLD 16	-5	-326	3842	13.39	-3.64	0
266	SLV 1	6	862	2087	-33.9	1.83	0.01
266	SLV 2	6	862	2087	-33.9	1.83	0.01
266	SLV 3	-4	-153	409	8.89	-2.19	0.02
266	SLV 4	-4	-153	409	8.89	-2.19	0.02
266	SLV 5	16	1819	5498	-75.59	5.19	-0.01
266	SLV 6	16	1819	5498	-75.59	5.19	-0.01
266	SLV 7	-18	-1564	-95	67.02	-8.19	0.02
266	SLV 8	-18	-1564	-95	67.02	-8.19	0.02
266	SLV 9	14	1625	6743	-68.54	4.06	-0.02
266	SLV 10	14	1625	6743	-68.54	4.06	-0.02
266	SLV 11	-19	-1758	1150	74.07	-9.32	0.01
266	SLV 12	-19	-1758	1150	74.07	-9.32	0.01
266	SLV 13	1	214	6238	-10.4	-1.94	-0.02
266	SLV 14	1	214	6238	-10.4	-1.94	-0.02
266	SLV 15	-10	-800	4560	32.38	-5.96	-0.01
266	SLV 16	-10	-800	4560	32.38	-5.96	-0.01
267	SLU 1	14	-60	1758	3.4	9.82	0
267	SLU 2	14	-64	1743	3.61	9.65	0
267	SLU 3	15	-64	1798	3.57	10.16	0
267	SLU 4	15	-66	1788	3.7	10.06	0
267	SLU 5	15	-67	1767	3.72	9.86	0
267	SLU 6	15	-66	1821	3.68	10.37	0
267	SLU 7	15	-69	1812	3.81	10.27	0
267	SLU 8	15	-65	1805	3.62	10.24	0
267	SLU 9	15	-68	1796	3.74	10.14	0
267	SLU 10	16	-78	1928	4.38	11.15	0
267	SLU 11	17	-77	1983	4.34	11.66	0
267	SLU 12	17	-80	1974	4.47	11.56	0
267	SLU 13	17	-80	1952	4.49	11.36	0
267	SLU 14	17	-80	2006	4.45	11.86	0
267	SLU 15	17	-82	1997	4.58	11.76	0
267	SLU 16	17	-79	1991	4.39	11.73	0
267	SLU 17	17	-81	1982	4.52	11.63	0
267	SLU 18	18	-80	2023	4.5	11.96	0
267	SLU 19	17	-82	2014	4.63	11.86	0
267	SLU 20	18	-82	2047	4.61	12.17	0
267	SLU 21	18	-85	2037	4.74	12.07	0
267	SLU 22	17	-73	1943	4.11	11.33	0
267	SLU 23	16	-77	1928	4.32	11.16	0

Nodo	Cont.	Reazione a traslazione			Reazione a rotazione		
Ind.	N.br.	x	y	z	x	y	z
267	SLU 24	17	-77	1983	4.28	11.67	0
267	SLU 25	17	-79	1973	4.4	11.57	0
267	SLU 26	17	-80	1951	4.42	11.37	0
267	SLU 27	17	-79	2006	4.39	11.88	0
267	SLU 28	17	-82	1997	4.51	11.78	0
267	SLU 29	17	-78	1990	4.32	11.74	0
267	SLU 30	17	-80	1981	4.45	11.64	0
267	SLU 31	19	-91	2113	5.09	12.66	0
267	SLU 32	19	-90	2168	5.05	13.17	0
267	SLU 33	19	-93	2159	5.18	13.07	0
267	SLU 34	19	-93	2137	5.2	12.87	0
267	SLU 35	20	-93	2191	5.16	13.37	0
267	SLU 36	19	-95	2182	5.28	13.27	0
267	SLU 37	19	-92	2176	5.1	13.24	0
267	SLU 38	19	-94	2166	5.22	13.14	0
267	SLU 39	20	-93	2208	5.21	13.47	0
267	SLU 40	20	-95	2199	5.34	13.37	0
267	SLU 41	20	-95	2231	5.32	13.68	0
267	SLU 42	20	-98	2222	5.44	13.58	0
267	SLU 43	18	-74	2222	4.18	12.25	0
267	SLU 44	18	-78	2207	4.39	12.08	0
267	SLU 45	18	-77	2262	4.35	12.59	0
267	SLU 46	18	-80	2253	4.48	12.49	0
267	SLU 47	18	-80	2231	4.5	12.29	0
267	SLU 48	19	-80	2285	4.46	12.8	0
267	SLU 49	19	-82	2276	4.59	12.7	0
267	SLU 50	19	-79	2270	4.4	12.66	0
267	SLU 51	18	-81	2260	4.52	12.56	0
267	SLU 52	20	-92	2392	5.16	13.58	0
267	SLU 53	21	-91	2447	5.12	14.09	0
267	SLU 54	21	-94	2438	5.25	13.99	0
267	SLU 55	20	-94	2416	5.27	13.79	0
267	SLU 56	21	-94	2471	5.23	14.29	0
267	SLU 57	21	-96	2461	5.36	14.19	0
267	SLU 58	21	-92	2455	5.17	14.16	0
267	SLU 59	21	-95	2446	5.29	14.06	0
267	SLU 60	21	-93	2487	5.28	14.39	0
267	SLU 61	21	-96	2478	5.41	14.29	0
267	SLU 62	21	-96	2511	5.39	14.6	0
267	SLU 63	21	-98	2501	5.52	14.5	0
267	SLU 64	20	-87	2407	4.88	13.76	0
267	SLU 65	20	-91	2392	5.09	13.59	0
267	SLU 66	21	-90	2447	5.06	14.1	0
267	SLU 67	21	-93	2437	5.18	14	0
267	SLU 68	20	-93	2416	5.2	13.8	0
267	SLU 69	21	-93	2470	5.16	14.3	0
267	SLU 70	21	-95	2461	5.29	14.2	0
267	SLU 71	21	-92	2454	5.1	14.17	0
267	SLU 72	21	-94	2445	5.23	14.07	0
267	SLU 73	22	-105	2577	5.87	15.09	0
267	SLU 74	23	-104	2632	5.83	15.6	0
267	SLU 75	23	-107	2623	5.95	15.5	0
267	SLU 76	22	-107	2601	5.98	15.3	0
267	SLU 77	23	-106	2655	5.94	15.8	0
267	SLU 78	23	-109	2646	6.06	15.7	0
267	SLU 79	23	-105	2640	5.87	15.67	0
267	SLU 80	23	-108	2631	6	15.57	0
267	SLU 81	23	-106	2672	5.99	15.9	0
267	SLU 82	23	-109	2663	6.11	15.8	0
267	SLU 83	24	-109	2696	6.1	16.11	0
267	SLU 84	23	-111	2686	6.22	16.01	0
267	SLE RA 1	15	-64	1811	3.6	10.25	0
267	SLE RA 2	15	-67	1801	3.74	10.14	0
267	SLE RA 3	15	-66	1837	3.72	10.48	0
267	SLE RA 4	15	-68	1831	3.8	10.41	0
267	SLE RA 5	15	-68	1817	3.81	10.28	0
267	SLE RA 6	16	-68	1853	3.79	10.62	0
267	SLE RA 7	15	-70	1847	3.87	10.55	0
267	SLE RA 8	15	-67	1843	3.75	10.53	0
267	SLE RA 9	15	-69	1836	3.83	10.46	0
267	SLE RA 10	16	-76	1924	4.26	11.14	0
267	SLE RA 11	17	-75	1961	4.23	11.48	0
267	SLE RA 12	17	-77	1955	4.32	11.41	0
267	SLE RA 13	17	-77	1940	4.33	11.28	0
267	SLE RA 14	17	-77	1977	4.3	11.61	0
267	SLE RA 15	17	-79	1970	4.39	11.55	0
267	SLE RA 16	17	-76	1966	4.26	11.53	0
267	SLE RA 17	17	-78	1960	4.35	11.46	0
267	SLE RA 18	17	-77	1988	4.34	11.68	0
267	SLE RA 19	17	-79	1981	4.42	11.61	0
267	SLE RA 20	17	-79	2003	4.41	11.82	0
267	SLE RA 21	17	-80	1997	4.49	11.75	0
267	SLE FR 1	15	-64	1811	3.6	10.25	0
267	SLE FR 2	15	-64	1809	3.63	10.23	0
267	SLE FR 3	15	-64	1817	3.63	10.31	0
267	SLE FR 4	16	-68	1862	3.85	10.66	0
267	SLE FR 5	16	-68	1870	3.85	10.74	0
267	SLE FR 6	16	-70	1899	3.97	10.97	0
267	SLE QP 1	15	-64	1811	3.6	10.25	0
267	SLE QP 2	16	-68	1864	3.82	10.68	0
267	SLD 1	11	-63	1779	3.65	17.79	0

Nodo	Cont.	Reazione a traslazione			Reazione a rotazione		
Ind.	N.br.	x	y	z	x	y	z
267	SLD 2	11	-63	1779	3.65	17.79	0
267	SLD 3	8	-474	1505	22.73	15.13	0
267	SLD 4	8	-474	1505	22.73	15.13	0
267	SLD 5	18	558	2254	-25.18	16.85	0
267	SLD 6	18	558	2254	-25.18	16.85	0
267	SLD 7	10	-814	1341	38.44	7.98	0
267	SLD 8	10	-814	1341	38.44	7.98	0
267	SLD 9	22	678	2387	-30.8	13.38	0
267	SLD 10	22	678	2387	-30.8	13.38	0
267	SLD 11	13	-693	1474	32.82	4.51	0
267	SLD 12	13	-693	1474	32.82	4.51	0
267	SLD 13	23	339	2223	-15.09	6.23	0
267	SLD 14	23	339	2223	-15.09	6.23	0
267	SLD 15	20	-73	1949	4	3.57	0
267	SLD 16	20	-73	1949	4	3.57	0
267	SLV 1	4	-56	1664	3.39	27.6	0.01
267	SLV 2	4	-56	1664	3.39	27.6	0.01
267	SLV 3	-2	-1026	1013	48.38	20.99	0.01
267	SLV 4	-2	-1026	1013	48.38	20.99	0.01
267	SLV 5	21	1408	2791	-64.55	25.77	0
267	SLV 6	21	1408	2791	-64.55	25.77	0
267	SLV 7	1	-1827	622	85.43	3.76	0.01
267	SLV 8	1	-1827	622	85.43	3.76	0.01
267	SLV 9	30	1692	3106	-77.78	17.6	-0.01
267	SLV 10	30	1692	3106	-77.78	17.6	-0.01
267	SLV 11	10	-1543	937	72.19	-4.41	0
267	SLV 12	10	-1543	937	72.19	-4.41	0
267	SLV 13	33	891	2715	-40.74	0.37	-0.01
267	SLV 14	33	891	2715	-40.74	0.37	-0.01
267	SLV 15	27	-79	2064	4.26	-6.23	-0.01
267	SLV 16	27	-79	2064	4.26	-6.23	-0.01
268	SLU 1	10	-402	4763	17.14	6.92	0
268	SLU 2	10	-314	4663	13.35	8.05	0
268	SLU 3	10	-414	4936	17.65	7.21	0
268	SLU 4	10	-360	4875	15.37	7.88	0
268	SLU 5	11	-318	4796	13.59	8.27	0
268	SLU 6	10	-418	5068	17.89	7.43	0
268	SLU 7	11	-365	5008	15.61	8.11	0
268	SLU 8	10	-412	5029	17.62	7.37	0
268	SLU 9	11	-359	4969	15.34	8.04	0
268	SLU 10	11	-363	5181	15.46	8.88	0
268	SLU 11	11	-463	5454	19.76	8.03	0
268	SLU 12	12	-410	5394	17.48	8.71	0
268	SLU 13	12	-368	5314	15.69	9.1	0
268	SLU 14	11	-468	5587	19.99	8.26	0
268	SLU 15	12	-414	5527	17.72	8.93	0
268	SLU 16	11	-461	5548	19.72	8.19	0
268	SLU 17	12	-408	5487	17.45	8.87	0
268	SLU 18	11	-473	5504	20.15	8.1	0
268	SLU 19	12	-420	5444	17.88	8.78	0
268	SLU 20	12	-478	5637	20.39	8.32	0
268	SLU 21	12	-424	5577	18.11	9	0
268	SLU 22	11	-451	5287	19.24	7.76	0
268	SLU 23	11	-363	5187	15.45	8.88	0
268	SLU 24	11	-463	5460	19.75	8.04	0
268	SLU 25	12	-409	5400	17.48	8.72	0
268	SLU 26	12	-367	5320	15.69	9.11	0
268	SLU 27	11	-467	5593	19.99	8.26	0
268	SLU 28	12	-414	5533	17.71	8.94	0
268	SLU 29	11	-461	5553	19.72	8.2	0
268	SLU 30	12	-408	5493	17.44	8.88	0
268	SLU 31	13	-412	5706	17.56	9.71	0
268	SLU 32	12	-512	5978	21.86	8.87	0
268	SLU 33	13	-459	5918	19.58	9.54	0
268	SLU 34	13	-417	5839	17.8	9.93	0
268	SLU 35	13	-517	6111	22.1	9.09	0
268	SLU 36	13	-463	6051	19.82	9.76	0
268	SLU 37	12	-510	6072	21.83	9.03	0
268	SLU 38	13	-457	6012	19.55	9.7	0
268	SLU 39	12	-522	6028	22.25	8.94	0
268	SLU 40	13	-468	5968	19.98	9.61	0
268	SLU 41	13	-527	6161	22.49	9.16	0
268	SLU 42	13	-473	6101	20.22	9.83	0
268	SLU 43	12	-506	6012	21.56	8.72	0
268	SLU 44	13	-418	5912	17.77	9.84	0
268	SLU 45	12	-518	6185	22.07	9	0
268	SLU 46	13	-464	6125	19.8	9.68	0
268	SLU 47	13	-422	6045	18.01	10.07	0
268	SLU 48	13	-522	6318	22.31	9.22	0
268	SLU 49	13	-469	6257	20.03	9.9	0
268	SLU 50	13	-516	6278	22.04	9.16	0
268	SLU 51	13	-463	6218	19.76	9.84	0
268	SLU 52	14	-467	6431	19.88	10.67	0
268	SLU 53	14	-567	6703	24.18	9.83	-0.01
268	SLU 54	14	-514	6643	21.9	10.5	-0.01
268	SLU 55	14	-472	6564	20.12	10.89	0
268	SLU 56	14	-572	6836	24.42	10.05	-0.01
268	SLU 57	14	-518	6776	22.14	10.72	-0.01
268	SLU 58	14	-565	6797	24.14	9.98	-0.01
268	SLU 59	14	-512	6737	21.87	10.66	-0.01
268	SLU 60	14	-577	6753	24.57	9.9	-0.01

Nodo	Cont.	Reazione a traslazione			Reazione a rotazione		
Ind.	N.br.	x	y	z	x	y	z
268	SLU 61	14	-523	6693	22.3	10.57	-0.01
268	SLU 62	14	-582	6886	24.81	10.12	-0.01
268	SLU 63	14	-528	6826	22.54	10.79	-0.01
268	SLU 64	13	-555	6537	23.67	9.55	0
268	SLU 65	14	-467	6436	19.87	10.68	0
268	SLU 66	14	-567	6709	24.17	9.83	-0.01
268	SLU 67	14	-513	6649	21.9	10.51	-0.01
268	SLU 68	14	-471	6569	20.11	10.9	0
268	SLU 69	14	-571	6842	24.41	10.05	-0.01
268	SLU 70	14	-518	6782	22.14	10.73	-0.01
268	SLU 71	14	-565	6802	24.14	9.99	-0.01
268	SLU 72	14	-512	6742	21.86	10.67	-0.01
268	SLU 73	15	-516	6955	21.98	11.5	-0.01
268	SLU 74	15	-616	7228	26.28	10.66	-0.01
268	SLU 75	15	-563	7167	24.01	11.33	-0.01
268	SLU 76	15	-521	7088	22.22	11.72	-0.01
268	SLU 77	15	-621	7361	26.52	10.88	-0.01
268	SLU 78	15	-567	7300	24.24	11.56	-0.01
268	SLU 79	15	-614	7321	26.25	10.82	-0.01
268	SLU 80	15	-561	7261	23.97	11.49	-0.01
268	SLU 81	15	-626	7277	26.68	10.73	-0.01
268	SLU 82	15	-572	7217	24.4	11.4	-0.01
268	SLU 83	15	-630	7410	26.91	10.95	-0.01
268	SLU 84	16	-577	7350	24.64	11.63	-0.01
268	SLE RA 1	10	-416	4913	17.74	7.16	0
268	SLE RA 2	10	-357	4846	15.21	7.91	0
268	SLE RA 3	10	-424	5028	18.08	7.35	0
268	SLE RA 4	10	-388	4988	16.56	7.8	0
268	SLE RA 5	11	-360	4935	15.37	8.06	0
268	SLE RA 6	10	-427	5116	18.24	7.5	0
268	SLE RA 7	11	-392	5076	16.72	7.95	0
268	SLE RA 8	10	-423	5090	18.06	7.46	0
268	SLE RA 9	11	-387	5050	16.54	7.91	0
268	SLE RA 10	11	-390	5192	16.62	8.46	0
268	SLE RA 11	11	-457	5374	19.49	7.9	0
268	SLE RA 12	11	-421	5334	17.97	8.35	0
268	SLE RA 13	11	-393	5280	16.78	8.61	0
268	SLE RA 14	11	-460	5462	19.64	8.05	0
268	SLE RA 15	11	-424	5422	18.13	8.5	0
268	SLE RA 16	11	-456	5436	19.46	8.01	0
268	SLE RA 17	11	-420	5396	17.95	8.46	0
268	SLE RA 18	11	-463	5407	19.75	7.95	0
268	SLE RA 19	11	-428	5367	18.23	8.4	0
268	SLE RA 20	11	-467	5495	19.91	8.1	0
268	SLE RA 21	11	-431	5455	18.39	8.55	0
268	SLE FR 1	10	-416	4913	17.74	7.16	0
268	SLE FR 2	10	-405	4900	17.24	7.31	0
268	SLE FR 3	10	-418	4948	17.81	7.22	0
268	SLE FR 4	10	-419	5048	17.84	7.55	0
268	SLE FR 5	10	-432	5097	18.41	7.46	0
268	SLE FR 6	10	-440	5160	18.75	7.56	0
268	SLE QP 1	10	-416	4913	17.74	7.16	0
268	SLE QP 2	10	-431	5061	18.34	7.4	0
268	SLD 1	26	-278	5946	11.51	22.02	-0.01
268	SLD 2	26	-278	5946	11.51	22.02	-0.01
268	SLD 3	35	-813	6452	34.42	31.33	-0.01
268	SLD 4	35	-813	6452	34.42	31.33	-0.01
268	SLD 5	1	427	4559	-18.45	-2.33	-0.01
268	SLD 6	1	427	4559	-18.45	-2.33	-0.01
268	SLD 7	31	-1357	6245	57.91	28.7	0
268	SLD 8	31	-1357	6245	57.91	28.7	0
268	SLD 9	-11	496	3877	-21.23	-13.9	-0.01
268	SLD 10	-11	496	3877	-21.23	-13.9	-0.01
268	SLD 11	19	-1288	5563	55.14	17.13	0.01
268	SLD 12	19	-1288	5563	55.14	17.13	0.01
268	SLD 13	-14	-48	3670	2.26	-16.54	0
268	SLD 14	-14	-48	3670	2.26	-16.54	0
268	SLD 15	-5	-583	4176	25.17	-7.23	0
268	SLD 16	-5	-583	4176	25.17	-7.23	0
268	SLV 1	46	-79	7076	2.63	41.74	-0.02
268	SLV 2	46	-79	7076	2.63	41.74	-0.02
268	SLV 3	69	-1326	8266	56	65.25	-0.01
268	SLV 4	69	-1326	8266	56	65.25	-0.01
268	SLV 5	-13	1566	3860	-67.31	-17.95	-0.03
268	SLV 6	-13	1566	3860	-67.31	-17.95	-0.03
268	SLV 7	62	-2591	7828	110.59	60.41	0.01
268	SLV 8	62	-2591	7828	110.59	60.41	0.01
268	SLV 9	-41	1730	2294	-73.9	-45.61	-0.02
268	SLV 10	-41	1730	2294	-73.9	-45.61	-0.02
268	SLV 11	34	-2427	6262	104	32.75	0.02
268	SLV 12	34	-2427	6262	104	32.75	0.02
268	SLV 13	-48	465	1856	-19.32	-50.45	0
268	SLV 14	-48	465	1856	-19.32	-50.45	0
268	SLV 15	-26	-782	3046	34.05	-26.94	0.01
268	SLV 16	-26	-782	3046	34.05	-26.94	0.01
269	SLU 1	10	-638	4998	25.89	6.96	0
269	SLU 2	9	-527	4885	21.24	5.51	0
269	SLU 3	11	-660	5178	26.82	7.23	0
269	SLU 4	10	-594	5111	24.03	6.36	0
269	SLU 5	10	-541	5023	21.85	5.71	0
269	SLU 6	11	-675	5316	27.43	7.43	0

Nodo	Cont.	Reazione a traslazione			Reazione a rotazione		
Ind.	N.br.	x	y	z	x	y	z
269	SLU 7	10	-608	5248	24.64	6.56	0
269	SLU 8	11	-667	5273	27.11	7.37	0
269	SLU 9	10	-600	5205	24.32	6.49	0
269	SLU 10	11	-614	5443	24.76	6.42	0
269	SLU 11	12	-747	5736	30.34	8.15	0
269	SLU 12	11	-681	5669	27.55	7.27	0
269	SLU 13	11	-628	5581	25.37	6.62	0
269	SLU 14	12	-762	5873	30.95	8.35	0
269	SLU 15	12	-695	5806	28.16	7.47	0
269	SLU 16	12	-754	5830	30.63	8.28	0
269	SLU 17	12	-687	5763	27.84	7.41	0
269	SLU 18	12	-762	5795	30.92	8.27	0
269	SLU 19	12	-696	5727	28.13	7.4	0
269	SLU 20	13	-777	5932	31.53	8.47	0
269	SLU 21	12	-710	5865	28.74	7.6	0
269	SLU 22	12	-723	5557	29.34	7.87	0
269	SLU 23	11	-612	5445	24.68	6.41	0
269	SLU 24	12	-745	5738	30.27	8.14	0
269	SLU 25	11	-679	5670	27.47	7.26	0
269	SLU 26	11	-626	5583	25.29	6.61	0
269	SLU 27	12	-760	5875	30.88	8.34	0
269	SLU 28	12	-693	5808	28.08	7.46	0
269	SLU 29	12	-752	5832	30.56	8.27	0
269	SLU 30	12	-685	5765	27.76	7.4	0
269	SLU 31	12	-699	6003	28.2	7.33	0
269	SLU 32	13	-832	6296	33.79	9.05	0
269	SLU 33	13	-766	6228	30.99	8.18	0
269	SLU 34	12	-714	6140	28.81	7.53	0
269	SLU 35	14	-847	6433	34.4	9.26	0
269	SLU 36	13	-780	6366	31.6	8.38	0
269	SLU 37	14	-839	6390	34.08	9.19	0
269	SLU 38	13	-772	6323	31.28	8.31	0
269	SLU 39	14	-847	6354	34.36	9.18	0
269	SLU 40	13	-781	6287	31.57	8.3	0
269	SLU 41	14	-862	6492	34.98	9.38	0
269	SLU 42	13	-795	6424	32.18	8.5	0
269	SLU 43	13	-800	6305	32.48	8.74	0
269	SLU 44	12	-689	6193	27.82	7.28	0
269	SLU 45	13	-822	6486	33.41	9.01	0
269	SLU 46	13	-756	6418	30.61	8.14	0
269	SLU 47	12	-703	6330	28.43	7.48	0
269	SLU 48	14	-837	6623	34.02	9.21	0
269	SLU 49	13	-770	6556	31.23	8.34	0
269	SLU 50	14	-829	6580	33.7	9.14	0
269	SLU 51	13	-762	6513	30.9	8.27	0
269	SLU 52	13	-776	6751	31.34	8.2	0
269	SLU 53	15	-909	7044	36.93	9.93	0
269	SLU 54	14	-843	6976	34.13	9.05	0
269	SLU 55	13	-791	6888	31.95	8.4	0
269	SLU 56	15	-924	7181	37.54	10.13	0
269	SLU 57	14	-857	7114	34.75	9.25	0
269	SLU 58	15	-916	7138	37.22	10.06	0
269	SLU 59	14	-849	7070	34.42	9.18	0
269	SLU 60	15	-924	7102	37.5	10.05	0
269	SLU 61	14	-858	7035	34.71	9.18	0
269	SLU 62	15	-939	7240	38.12	10.25	0
269	SLU 63	15	-872	7172	35.32	9.38	0
269	SLU 64	14	-885	6865	35.92	9.65	0
269	SLU 65	13	-774	6753	31.27	8.19	0
269	SLU 66	15	-907	7045	36.85	9.92	0
269	SLU 67	14	-841	6978	34.06	9.04	0
269	SLU 68	13	-789	6890	31.88	8.39	0
269	SLU 69	15	-922	7183	37.46	10.12	0
269	SLU 70	14	-855	7115	34.67	9.24	0
269	SLU 71	15	-914	7140	37.14	10.05	0
269	SLU 72	14	-847	7072	34.35	9.17	0
269	SLU 73	15	-861	7310	34.79	9.1	0
269	SLU 74	16	-994	7603	40.37	10.83	-0.01
269	SLU 75	15	-928	7536	37.58	9.96	-0.01
269	SLU 76	15	-876	7448	35.4	9.31	-0.01
269	SLU 77	16	-1009	7741	40.98	11.03	-0.01
269	SLU 78	16	-942	7673	38.19	10.16	-0.01
269	SLU 79	16	-1001	7697	40.66	10.97	-0.01
269	SLU 80	16	-934	7630	37.87	10.09	-0.01
269	SLU 81	16	-1009	7662	40.95	10.96	-0.01
269	SLU 82	16	-943	7594	38.16	10.08	-0.01
269	SLU 83	17	-1024	7799	41.56	11.16	-0.01
269	SLU 84	16	-957	7732	38.77	10.28	-0.01
269	SLE RA 1	11	-662	5158	26.87	7.22	0
269	SLE RA 2	10	-588	5083	23.77	6.25	0
269	SLE RA 3	11	-677	5278	27.5	7.4	0
269	SLE RA 4	11	-633	5233	25.63	6.82	0
269	SLE RA 5	10	-598	5174	24.18	6.38	0
269	SLE RA 6	11	-687	5370	27.9	7.54	0
269	SLE RA 7	11	-642	5325	26.04	6.95	0
269	SLE RA 8	11	-681	5341	27.69	7.49	0
269	SLE RA 9	11	-637	5296	25.83	6.91	0
269	SLE RA 10	11	-646	5455	26.12	6.86	0
269	SLE RA 11	12	-735	5650	29.84	8.01	0
269	SLE RA 12	11	-691	5605	27.98	7.43	0
269	SLE RA 13	11	-656	5546	26.53	6.99	0

Nodo	Cont.	Reazione a traslazione			Reazione a rotazione		
Ind.	N.br.	x	y	z	x	y	z
269	SLE RA 14	12	-745	5741	30.25	8.15	0
269	SLE RA 15	12	-700	5697	28.39	7.56	0
269	SLE RA 16	12	-739	5713	30.04	8.1	0
269	SLE RA 17	12	-695	5668	28.17	7.52	0
269	SLE RA 18	12	-745	5689	30.23	8.09	0
269	SLE RA 19	12	-701	5644	28.37	7.51	0
269	SLE RA 20	12	-755	5781	30.63	8.23	0
269	SLE RA 21	12	-710	5736	28.77	7.64	0
269	SLE FR 1	11	-662	5158	26.87	7.22	0
269	SLE FR 2	11	-647	5143	26.25	7.03	0
269	SLE FR 3	11	-666	5194	27.04	7.28	0
269	SLE FR 4	11	-672	5302	27.26	7.29	0
269	SLE FR 5	11	-691	5354	28.04	7.54	0
269	SLE FR 6	11	-703	5423	28.55	7.66	0
269	SLE QP 1	11	-662	5158	26.87	7.22	0
269	SLE QP 2	11	-687	5317	27.88	7.48	0
269	SLD 1	24	-219	3796	7.91	20.75	0
269	SLD 2	24	-219	3796	7.91	20.75	0
269	SLD 3	31	-808	4229	33.16	28.25	-0.01
269	SLD 4	31	-808	4229	33.16	28.25	-0.01
269	SLD 5	3	346	4204	-16.41	0.09	0
269	SLD 6	3	346	4204	-16.41	0.09	0
269	SLD 7	29	-1616	5647	67.76	25.09	-0.01
269	SLD 8	29	-1616	5647	67.76	25.09	-0.01
269	SLD 9	-6	242	4987	-12	-10.12	0
269	SLD 10	-6	242	4987	-12	-10.12	0
269	SLD 11	19	-1720	6430	72.17	14.88	-0.01
269	SLD 12	19	-1720	6430	72.17	14.88	-0.01
269	SLD 13	-9	-566	6405	22.6	-13.28	0
269	SLD 14	-9	-566	6405	22.6	-13.28	0
269	SLD 15	-1	-1154	6838	47.85	-5.78	0
269	SLD 16	-1	-1154	6838	47.85	-5.78	0
269	SLV 1	40	401	1819	-18.52	38.84	-0.01
269	SLV 2	40	401	1819	-18.52	38.84	-0.01
269	SLV 3	59	-971	2839	40.33	57.73	-0.02
269	SLV 4	59	-971	2839	40.33	57.73	-0.02
269	SLV 5	-9	1720	2721	-75.3	-11.77	0.01
269	SLV 6	-9	1720	2721	-75.3	-11.77	0.01
269	SLV 7	54	-2853	6120	120.88	51.22	-0.02
269	SLV 8	54	-2853	6120	120.88	51.22	-0.02
269	SLV 9	-32	1479	4514	-65.11	-36.25	0.02
269	SLV 10	-32	1479	4514	-65.11	-36.25	0.02
269	SLV 11	31	-3094	7913	131.06	26.74	-0.02
269	SLV 12	31	-3094	7913	131.06	26.74	-0.02
269	SLV 13	-37	-402	7795	15.43	-42.76	0.01
269	SLV 14	-37	-402	7795	15.43	-42.76	0.01
269	SLV 15	-18	-1774	8815	74.28	-23.87	0
269	SLV 16	-18	-1774	8815	74.28	-23.87	0
270	SLU 1	11	5	2737	0.68	8.73	-0.05
270	SLU 2	11	-2	2703	0.97	8.63	-0.05
270	SLU 3	11	-1	2811	0.91	9	-0.05
270	SLU 4	11	-5	2791	1.08	8.94	-0.05
270	SLU 5	11	-9	2749	1.21	8.8	-0.05
270	SLU 6	12	-8	2856	1.15	9.16	-0.05
270	SLU 7	12	-12	2836	1.32	9.1	-0.05
270	SLU 8	12	-9	2828	1.16	9.05	-0.05
270	SLU 9	11	-13	2808	1.33	9	-0.05
270	SLU 10	13	-3	3033	1.14	9.92	-0.05
270	SLU 11	13	-2	3140	1.08	10.29	-0.05
270	SLU 12	13	-6	3120	1.25	10.23	-0.05
270	SLU 13	13	-9	3079	1.37	10.09	-0.05
270	SLU 14	13	-8	3186	1.31	10.45	-0.06
270	SLU 15	13	-13	3166	1.48	10.39	-0.05
270	SLU 16	13	-9	3157	1.33	10.34	-0.05
270	SLU 17	13	-13	3137	1.5	10.28	-0.05
270	SLU 18	13	4	3207	0.92	10.57	-0.06
270	SLU 19	13	0	3187	1.09	10.51	-0.06
270	SLU 20	14	-3	3253	1.16	10.73	-0.06
270	SLU 21	14	-7	3233	1.33	10.67	-0.06
270	SLU 22	13	2	3063	0.91	9.98	-0.05
270	SLU 23	13	-5	3030	1.19	9.89	-0.05
270	SLU 24	13	-4	3137	1.13	10.26	-0.05
270	SLU 25	13	-8	3117	1.3	10.2	-0.05
270	SLU 26	13	-12	3076	1.43	10.05	-0.05
270	SLU 27	13	-11	3183	1.37	10.42	-0.06
270	SLU 28	13	-15	3163	1.54	10.36	-0.05
270	SLU 29	13	-11	3155	1.38	10.31	-0.05
270	SLU 30	13	-15	3135	1.56	10.25	-0.05
270	SLU 31	14	-6	3360	1.36	11.18	-0.06
270	SLU 32	15	-5	3467	1.3	11.54	-0.06
270	SLU 33	15	-9	3447	1.47	11.49	-0.06
270	SLU 34	14	-12	3405	1.6	11.34	-0.06
270	SLU 35	15	-11	3512	1.54	11.71	-0.06
270	SLU 36	15	-15	3493	1.71	11.65	-0.06
270	SLU 37	15	-12	3484	1.55	11.6	-0.06
270	SLU 38	15	-16	3464	1.72	11.54	-0.06
270	SLU 39	15	1	3534	1.15	11.83	-0.06
270	SLU 40	15	-3	3514	1.32	11.77	-0.06
270	SLU 41	15	-6	3580	1.39	11.99	-0.06
270	SLU 42	15	-10	3560	1.56	11.93	-0.06
270	SLU 43	14	7	3446	0.81	10.91	-0.06

Nodo	Cont.	Reazione a traslazione			Reazione a rotazione		
Ind.	N.br.	x	y	z	x	y	z
270	SLU 44	14	0	3412	1.1	10.82	-0.06
270	SLU 45	14	1	3520	1.04	11.18	-0.06
270	SLU 46	14	-3	3500	1.21	11.13	-0.06
270	SLU 47	14	-7	3458	1.33	10.98	-0.06
270	SLU 48	14	-6	3565	1.27	11.35	-0.06
270	SLU 49	14	-10	3545	1.44	11.29	-0.06
270	SLU 50	14	-6	3537	1.29	11.24	-0.06
270	SLU 51	14	-10	3517	1.46	11.18	-0.06
270	SLU 52	15	-1	3742	1.26	12.11	-0.06
270	SLU 53	16	0	3849	1.2	12.47	-0.07
270	SLU 54	16	-4	3829	1.37	12.42	-0.07
270	SLU 55	16	-7	3787	1.5	12.27	-0.06
270	SLU 56	16	-6	3895	1.44	12.64	-0.07
270	SLU 57	16	-10	3875	1.61	12.58	-0.07
270	SLU 58	16	-7	3866	1.46	12.53	-0.07
270	SLU 59	16	-11	3846	1.63	12.47	-0.07
270	SLU 60	16	6	3916	1.05	12.75	-0.07
270	SLU 61	16	2	3896	1.22	12.7	-0.07
270	SLU 62	16	-1	3962	1.29	12.92	-0.07
270	SLU 63	16	-5	3942	1.46	12.86	-0.07
270	SLU 64	15	4	3772	1.04	12.17	-0.06
270	SLU 65	15	-3	3739	1.32	12.08	-0.06
270	SLU 66	16	-2	3846	1.26	12.44	-0.07
270	SLU 67	16	-6	3826	1.43	12.39	-0.07
270	SLU 68	16	-9	3785	1.56	12.24	-0.06
270	SLU 69	16	-8	3892	1.5	12.6	-0.07
270	SLU 70	16	-12	3872	1.67	12.55	-0.07
270	SLU 71	16	-9	3864	1.51	12.49	-0.07
270	SLU 72	16	-13	3844	1.68	12.44	-0.07
270	SLU 73	17	-3	4069	1.49	13.37	-0.07
270	SLU 74	17	-2	4176	1.43	13.73	-0.07
270	SLU 75	17	-6	4156	1.6	13.68	-0.07
270	SLU 76	17	-10	4114	1.73	13.53	-0.07
270	SLU 77	18	-9	4221	1.67	13.89	-0.07
270	SLU 78	18	-13	4201	1.84	13.84	-0.07
270	SLU 79	18	-10	4193	1.68	13.78	-0.07
270	SLU 80	17	-14	4173	1.85	13.73	-0.07
270	SLU 81	18	3	4243	1.28	14.01	-0.07
270	SLU 82	18	-1	4223	1.45	13.96	-0.07
270	SLU 83	18	-3	4289	1.52	14.17	-0.07
270	SLU 84	18	-7	4269	1.69	14.12	-0.07
270	SLE RA 1	12	4	2830	0.75	9.09	-0.05
270	SLE RA 2	11	-1	2808	0.94	9.02	-0.05
270	SLE RA 3	12	0	2879	0.9	9.27	-0.05
270	SLE RA 4	12	-3	2866	1.01	9.23	-0.05
270	SLE RA 5	12	-5	2838	1.1	9.13	-0.05
270	SLE RA 6	12	-5	2910	1.06	9.37	-0.05
270	SLE RA 7	12	-7	2896	1.17	9.34	-0.05
270	SLE RA 8	12	-5	2891	1.07	9.3	-0.05
270	SLE RA 9	12	-8	2878	1.18	9.26	-0.05
270	SLE RA 10	13	-1	3028	1.05	9.88	-0.05
270	SLE RA 11	13	-1	3099	1.01	10.13	-0.05
270	SLE RA 12	13	-3	3086	1.12	10.09	-0.05
270	SLE RA 13	13	-6	3058	1.21	9.99	-0.05
270	SLE RA 14	13	-5	3129	1.17	10.23	-0.05
270	SLE RA 15	13	-8	3116	1.28	10.2	-0.05
270	SLE RA 16	13	-5	3110	1.18	10.16	-0.05
270	SLE RA 17	13	-8	3097	1.29	10.12	-0.05
270	SLE RA 18	13	3	3144	0.91	10.31	-0.05
270	SLE RA 19	13	0	3131	1.02	10.28	-0.05
270	SLE RA 20	13	-1	3174	1.07	10.42	-0.06
270	SLE RA 21	13	-4	3161	1.18	10.38	-0.05
270	SLE FR 1	12	4	2830	0.75	9.09	-0.05
270	SLE FR 2	12	3	2826	0.79	9.07	-0.05
270	SLE FR 3	12	2	2842	0.81	9.13	-0.05
270	SLE FR 4	12	3	2920	0.83	9.44	-0.05
270	SLE FR 5	12	2	2936	0.86	9.5	-0.05
270	SLE FR 6	12	4	2987	0.83	9.7	-0.05
270	SLE QP 1	12	4	2830	0.75	9.09	-0.05
270	SLE QP 2	12	4	2924	0.8	9.45	-0.05
270	SLD 1	21	69	3184	-1.38	18.86	-0.09
270	SLD 2	21	69	3184	-1.38	18.86	-0.09
270	SLD 3	19	-477	2986	17.6	16.8	-0.08
270	SLD 4	19	-477	2986	17.6	16.8	-0.08
270	SLD 5	18	850	3302	-28.65	15.39	-0.07
270	SLD 6	18	850	3302	-28.65	15.39	-0.07
270	SLD 7	11	-967	2642	34.63	8.54	-0.05
270	SLD 8	11	-967	2642	34.63	8.54	-0.05
270	SLD 9	13	975	3206	-33.04	10.36	-0.05
270	SLD 10	13	975	3206	-33.04	10.36	-0.05
270	SLD 11	6	-843	2546	30.24	3.52	-0.03
270	SLD 12	6	-843	2546	30.24	3.52	-0.03
270	SLD 13	5	484	2863	-16.01	2.1	-0.02
270	SLD 14	5	484	2863	-16.01	2.1	-0.02
270	SLD 15	3	-61	2665	2.97	0.05	-0.01
270	SLD 16	3	-61	2665	2.97	0.05	-0.01
270	SLV 1	35	155	3558	-4.29	32.47	-0.14
270	SLV 2	35	155	3558	-4.29	32.47	-0.14
270	SLV 3	30	-1133	3082	40.55	27.44	-0.12
270	SLV 4	30	-1133	3082	40.55	27.44	-0.12
270	SLV 5	27	2002	3837	-68.73	23.99	-0.1

Nodo	Cont.	Reazione a traslazione			Reazione a rotazione		
Ind.	N.br.	x	y	z	x	y	z
270	SLV 6	27	2002	3837	-68.73	23.99	-0.1
270	SLV 7	10	-2290	2249	80.72	7.22	-0.04
270	SLV 8	10	-2290	2249	80.72	7.22	-0.04
270	SLV 9	15	2298	3599	-79.13	11.69	-0.06
270	SLV 10	15	2298	3599	-79.13	11.69	-0.06
270	SLV 11	-3	-1995	2012	70.32	-5.08	0
270	SLV 12	-3	-1995	2012	70.32	-5.08	0
270	SLV 13	-6	1140	2767	-38.96	-8.53	0.02
270	SLV 14	-6	1140	2767	-38.96	-8.53	0.02
270	SLV 15	-11	-148	2290	5.88	-13.56	0.04
270	SLV 16	-11	-148	2290	5.88	-13.56	0.04
271	SLU 1	2	128	2888	-15.59	2.79	-0.01
271	SLU 2	2	128	2887	-15.57	2.79	-0.01
271	SLU 3	3	135	2941	-16.17	2.86	-0.01
271	SLU 4	3	135	2940	-16.17	2.86	-0.01
271	SLU 5	2	134	2898	-15.94	2.81	-0.01
271	SLU 6	3	141	2952	-16.54	2.88	-0.01
271	SLU 7	3	141	2951	-16.53	2.88	-0.01
271	SLU 8	3	140	2910	-16.32	2.84	-0.01
271	SLU 9	3	140	2909	-16.31	2.84	-0.01
271	SLU 10	3	138	3309	-17.64	3.32	-0.01
271	SLU 11	3	145	3363	-18.24	3.39	-0.01
271	SLU 12	3	145	3363	-18.23	3.39	-0.01
271	SLU 13	3	144	3320	-18.01	3.34	-0.01
271	SLU 14	3	151	3374	-18.61	3.41	-0.01
271	SLU 15	3	151	3374	-18.6	3.41	-0.01
271	SLU 16	3	150	3332	-18.39	3.37	-0.01
271	SLU 17	3	150	3332	-18.38	3.37	-0.01
271	SLU 18	3	142	3492	-18.54	3.54	-0.01
271	SLU 19	3	142	3491	-18.53	3.54	-0.01
271	SLU 20	3	148	3502	-18.9	3.57	-0.01
271	SLU 21	3	148	3502	-18.9	3.57	-0.01
271	SLU 22	3	139	3322	-17.76	3.3	-0.01
271	SLU 23	3	139	3320	-17.75	3.3	-0.01
271	SLU 24	3	146	3375	-18.35	3.37	-0.01
271	SLU 25	3	146	3374	-18.34	3.37	-0.01
271	SLU 26	3	145	3331	-18.12	3.33	-0.01
271	SLU 27	3	152	3385	-18.72	3.4	-0.01
271	SLU 28	3	152	3385	-18.71	3.4	-0.01
271	SLU 29	3	151	3343	-18.5	3.36	-0.01
271	SLU 30	3	151	3343	-18.49	3.36	-0.01
271	SLU 31	3	149	3743	-19.82	3.83	-0.02
271	SLU 32	3	156	3797	-20.42	3.9	-0.02
271	SLU 33	3	156	3796	-20.41	3.9	-0.02
271	SLU 34	3	155	3754	-20.18	3.86	-0.02
271	SLU 35	4	162	3808	-20.78	3.93	-0.02
271	SLU 36	4	162	3807	-20.78	3.93	-0.02
271	SLU 37	4	161	3766	-20.56	3.89	-0.02
271	SLU 38	4	161	3765	-20.56	3.89	-0.02
271	SLU 39	4	153	3925	-20.71	4.06	-0.02
271	SLU 40	4	153	3924	-20.71	4.06	-0.02
271	SLU 41	4	159	3936	-21.08	4.09	-0.02
271	SLU 42	4	159	3935	-21.07	4.09	-0.02
271	SLU 43	3	163	3606	-19.52	3.45	-0.01
271	SLU 44	3	163	3605	-19.5	3.45	-0.01
271	SLU 45	3	170	3659	-20.1	3.52	-0.01
271	SLU 46	3	170	3658	-20.1	3.52	-0.01
271	SLU 47	3	168	3615	-19.87	3.47	-0.01
271	SLU 48	3	176	3670	-20.47	3.54	-0.01
271	SLU 49	3	176	3669	-20.46	3.54	-0.01
271	SLU 50	3	175	3628	-20.25	3.5	-0.01
271	SLU 51	3	175	3627	-20.24	3.5	-0.01
271	SLU 52	4	172	4027	-21.57	3.98	-0.02
271	SLU 53	4	180	4081	-22.17	4.05	-0.02
271	SLU 54	4	180	4080	-22.16	4.05	-0.02
271	SLU 55	4	178	4038	-21.94	4	-0.02
271	SLU 56	4	186	4092	-22.54	4.07	-0.02
271	SLU 57	4	186	4091	-22.53	4.07	-0.02
271	SLU 58	4	185	4050	-22.32	4.03	-0.02
271	SLU 59	4	184	4049	-22.31	4.03	-0.02
271	SLU 60	4	177	4209	-22.47	4.2	-0.02
271	SLU 61	4	177	4209	-22.46	4.2	-0.02
271	SLU 62	4	183	4220	-22.83	4.23	-0.02
271	SLU 63	4	183	4219	-22.83	4.23	-0.02
271	SLU 64	3	174	4039	-21.69	3.96	-0.02
271	SLU 65	3	174	4038	-21.68	3.96	-0.02
271	SLU 66	4	181	4092	-22.28	4.03	-0.02
271	SLU 67	4	181	4092	-22.27	4.03	-0.02
271	SLU 68	4	180	4049	-22.05	3.99	-0.02
271	SLU 69	4	187	4103	-22.65	4.06	-0.02
271	SLU 70	4	187	4102	-22.64	4.06	-0.02
271	SLU 71	4	186	4061	-22.43	4.01	-0.02
271	SLU 72	4	186	4060	-22.42	4.01	-0.02
271	SLU 73	4	184	4461	-23.75	4.49	-0.02
271	SLU 74	4	191	4515	-24.35	4.56	-0.02
271	SLU 75	4	191	4514	-24.34	4.56	-0.02
271	SLU 76	4	190	4472	-24.11	4.52	-0.02
271	SLU 77	4	197	4526	-24.71	4.59	-0.02
271	SLU 78	4	197	4525	-24.7	4.59	-0.02
271	SLU 79	4	196	4484	-24.49	4.55	-0.02
271	SLU 80	4	196	4483	-24.49	4.55	-0.02

Nodo	Cont.	Reazione a traslazione			Reazione a rotazione		
Ind.	N.br.	x	y	z	x	y	z
271	SLU 81	4	188	4643	-24.64	4.72	-0.02
271	SLU 82	4	188	4642	-24.64	4.72	-0.02
271	SLU 83	4	194	4654	-25.01	4.75	-0.02
271	SLU 84	4	194	4653	-25	4.75	-0.02
271	SLE RA 1	3	131	3012	-16.21	2.93	-0.01
271	SLE RA 2	3	131	3011	-16.2	2.93	-0.01
271	SLE RA 3	3	136	3047	-16.6	2.98	-0.01
271	SLE RA 4	3	136	3047	-16.59	2.98	-0.01
271	SLE RA 5	3	135	3018	-16.45	2.95	-0.01
271	SLE RA 6	3	140	3054	-16.84	3	-0.01
271	SLE RA 7	3	140	3054	-16.84	3	-0.01
271	SLE RA 8	3	139	3026	-16.7	2.97	-0.01
271	SLE RA 9	3	139	3026	-16.69	2.97	-0.01
271	SLE RA 10	3	138	3293	-17.58	3.29	-0.01
271	SLE RA 11	3	143	3329	-17.98	3.33	-0.01
271	SLE RA 12	3	143	3328	-17.97	3.33	-0.01
271	SLE RA 13	3	142	3300	-17.82	3.31	-0.01
271	SLE RA 14	3	147	3336	-18.22	3.35	-0.01
271	SLE RA 15	3	147	3336	-18.22	3.35	-0.01
271	SLE RA 16	3	146	3308	-18.08	3.32	-0.01
271	SLE RA 17	3	146	3308	-18.07	3.32	-0.01
271	SLE RA 18	3	141	3414	-18.18	3.44	-0.01
271	SLE RA 19	3	141	3414	-18.17	3.44	-0.01
271	SLE RA 20	3	145	3422	-18.42	3.46	-0.01
271	SLE RA 21	3	145	3421	-18.42	3.46	-0.01
271	SLE FR 1	3	131	3012	-16.21	2.93	-0.01
271	SLE FR 2	3	131	3012	-16.21	2.93	-0.01
271	SLE FR 3	3	133	3015	-16.31	2.94	-0.01
271	SLE FR 4	3	134	3132	-16.8	3.09	-0.01
271	SLE FR 5	3	136	3136	-16.9	3.09	-0.01
271	SLE FR 6	3	136	3213	-17.19	3.19	-0.01
271	SLE QP 1	3	131	3012	-16.21	2.93	-0.01
271	SLE QP 2	3	134	3133	-16.8	3.09	-0.01
271	SLD 1	-1	161	4191	-18.05	3.3	-0.02
271	SLD 2	-1	161	4191	-18.05	3.3	-0.02
271	SLD 3	5	-168	3655	-3.92	5.76	-0.02
271	SLD 4	5	-168	3655	-3.92	5.76	-0.02
271	SLD 5	-6	640	4264	-38.62	-0.58	-0.02
271	SLD 6	-6	640	4264	-38.62	-0.58	-0.02
271	SLD 7	11	-454	2475	8.51	7.61	-0.01
271	SLD 8	11	-454	2475	8.51	7.61	-0.01
271	SLD 9	-6	723	3790	-42.11	-1.44	-0.02
271	SLD 10	-6	723	3790	-42.11	-1.44	-0.02
271	SLD 11	12	-371	2001	5.02	6.75	0
271	SLD 12	12	-371	2001	5.02	6.75	0
271	SLD 13	1	436	2610	-29.68	0.41	-0.01
271	SLD 14	1	436	2610	-29.68	0.41	-0.01
271	SLD 15	6	108	2074	-15.54	2.87	0
271	SLD 16	6	108	2074	-15.54	2.87	0
271	SLV 1	-5	207	5653	-20.11	3.42	-0.04
271	SLV 2	-5	207	5653	-20.11	3.42	-0.04
271	SLV 3	8	-569	4375	13.33	9.57	-0.03
271	SLV 4	8	-569	4375	13.33	9.57	-0.03
271	SLV 5	-19	1332	5828	-68.52	-6.13	-0.04
271	SLV 6	-19	1332	5828	-68.52	-6.13	-0.04
271	SLV 7	24	-1253	1566	42.96	14.35	0
271	SLV 8	24	-1253	1566	42.96	14.35	0
271	SLV 9	-18	1522	4699	-76.56	-8.18	-0.03
271	SLV 10	-18	1522	4699	-76.56	-8.18	-0.03
271	SLV 11	25	-1064	438	34.92	12.3	0.01
271	SLV 12	25	-1064	438	34.92	12.3	0.01
271	SLV 13	-2	837	1891	-46.93	-3.4	0
271	SLV 14	-2	837	1891	-46.93	-3.4	0
271	SLV 15	11	62	612	-13.49	2.75	0.01
271	SLV 16	11	62	612	-13.49	2.75	0.01
272	SLU 1	13	-27	1847	1.44	8.82	0
272	SLU 2	13	-32	1836	1.66	8.69	0
272	SLU 3	14	-30	1887	1.56	9.13	0
272	SLU 4	14	-33	1880	1.69	9.05	0
272	SLU 5	14	-34	1859	1.74	8.87	0
272	SLU 6	14	-32	1909	1.64	9.31	0
272	SLU 7	14	-35	1903	1.77	9.23	0
272	SLU 8	14	-31	1892	1.61	9.19	0
272	SLU 9	14	-34	1885	1.74	9.11	0
272	SLU 10	15	-37	2039	1.94	10.04	0
272	SLU 11	16	-35	2089	1.84	10.47	0
272	SLU 12	16	-38	2083	1.97	10.39	0
272	SLU 13	16	-39	2061	2.02	10.22	0
272	SLU 14	16	-37	2112	1.92	10.66	0
272	SLU 15	16	-40	2106	2.05	10.58	0
272	SLU 16	16	-37	2095	1.88	10.54	0
272	SLU 17	16	-39	2088	2.02	10.46	0
272	SLU 18	16	-35	2136	1.84	10.75	0
272	SLU 19	16	-38	2130	1.97	10.67	0
272	SLU 20	17	-37	2159	1.92	10.93	0
272	SLU 21	17	-40	2152	2.05	10.85	0
272	SLU 22	16	-33	2046	1.72	10.18	0
272	SLU 23	15	-37	2035	1.94	10.04	0
272	SLU 24	16	-36	2086	1.84	10.48	0
272	SLU 25	16	-38	2079	1.97	10.4	0
272	SLU 26	16	-39	2057	2.02	10.23	0

Nodo	Cont.	Reazione a traslazione			Reazione a rotazione		
Ind.	N.br.	x	y	z	x	y	z
272	SLU 27	16	-38	2108	1.92	10.66	0
272	SLU 28	16	-40	2102	2.05	10.58	0
272	SLU 29	16	-37	2091	1.89	10.54	0
272	SLU 30	16	-40	2084	2.02	10.46	0
272	SLU 31	17	-43	2238	2.22	11.39	0
272	SLU 32	18	-41	2288	2.12	11.83	0
272	SLU 33	18	-44	2282	2.25	11.75	0
272	SLU 34	18	-45	2260	2.3	11.57	0
272	SLU 35	18	-43	2311	2.2	12.01	0
272	SLU 36	18	-46	2305	2.33	11.93	0
272	SLU 37	18	-43	2294	2.17	11.89	0
272	SLU 38	18	-45	2287	2.3	11.81	0
272	SLU 39	18	-41	2335	2.12	12.1	0
272	SLU 40	18	-43	2329	2.25	12.02	0
272	SLU 41	19	-43	2358	2.2	12.28	0
272	SLU 42	19	-45	2351	2.33	12.2	0
272	SLU 43	17	-33	2332	1.78	11.01	0
272	SLU 44	17	-38	2322	2	10.87	0
272	SLU 45	17	-36	2373	1.9	11.31	0
272	SLU 46	17	-39	2366	2.03	11.23	0
272	SLU 47	17	-40	2344	2.08	11.06	0
272	SLU 48	18	-38	2395	1.98	11.49	0
272	SLU 49	17	-41	2389	2.11	11.41	0
272	SLU 50	17	-37	2378	1.94	11.37	0
272	SLU 51	17	-40	2371	2.07	11.29	0
272	SLU 52	19	-43	2524	2.27	12.22	0
272	SLU 53	19	-42	2575	2.17	12.66	0
272	SLU 54	19	-44	2569	2.3	12.58	0
272	SLU 55	19	-45	2547	2.36	12.4	0
272	SLU 56	20	-44	2598	2.26	12.84	0
272	SLU 57	19	-46	2591	2.39	12.76	0
272	SLU 58	19	-43	2580	2.22	12.72	0
272	SLU 59	19	-46	2574	2.35	12.64	0
272	SLU 60	20	-41	2622	2.18	12.93	0
272	SLU 61	20	-44	2616	2.31	12.85	0
272	SLU 62	20	-43	2645	2.26	13.11	0
272	SLU 63	20	-46	2638	2.39	13.03	0
272	SLU 64	19	-39	2531	2.06	12.36	0
272	SLU 65	19	-44	2521	2.28	12.23	0
272	SLU 66	19	-42	2571	2.18	12.66	0
272	SLU 67	19	-44	2565	2.31	12.58	0
272	SLU 68	19	-46	2543	2.36	12.41	0
272	SLU 69	20	-44	2594	2.26	12.84	0
272	SLU 70	19	-47	2588	2.39	12.76	0
272	SLU 71	19	-43	2577	2.22	12.73	0
272	SLU 72	19	-46	2570	2.35	12.65	0
272	SLU 73	21	-49	2723	2.55	13.57	0
272	SLU 74	21	-47	2774	2.45	14.01	0
272	SLU 75	21	-50	2768	2.59	13.93	0
272	SLU 76	21	-51	2746	2.64	13.76	0
272	SLU 77	22	-49	2797	2.54	14.19	0
272	SLU 78	22	-52	2790	2.67	14.11	0
272	SLU 79	21	-49	2779	2.5	14.07	0
272	SLU 80	21	-51	2773	2.63	13.99	0
272	SLU 81	22	-47	2821	2.46	14.28	0
272	SLU 82	22	-50	2814	2.59	14.2	0
272	SLU 83	22	-49	2844	2.54	14.47	0
272	SLU 84	22	-52	2837	2.67	14.39	0
272	SLE RA 1	14	-29	1903	1.52	9.21	0
272	SLE RA 2	14	-32	1896	1.67	9.12	0
272	SLE RA 3	14	-31	1930	1.6	9.41	0
272	SLE RA 4	14	-32	1926	1.69	9.36	0
272	SLE RA 5	14	-33	1911	1.72	9.24	0
272	SLE RA 6	15	-32	1945	1.66	9.53	0
272	SLE RA 7	14	-34	1941	1.74	9.48	0
272	SLE RA 8	14	-32	1934	1.63	9.45	0
272	SLE RA 9	14	-33	1929	1.72	9.4	0
272	SLE RA 10	15	-35	2031	1.85	10.02	0
272	SLE RA 11	16	-34	2065	1.79	10.31	0
272	SLE RA 12	16	-36	2061	1.87	10.26	0
272	SLE RA 13	16	-37	2047	1.91	10.14	0
272	SLE RA 14	16	-36	2080	1.84	10.43	0
272	SLE RA 15	16	-37	2076	1.93	10.38	0
272	SLE RA 16	16	-35	2069	1.82	10.35	0
272	SLE RA 17	16	-37	2065	1.9	10.3	0
272	SLE RA 18	16	-34	2097	1.79	10.49	0
272	SLE RA 19	16	-36	2092	1.87	10.44	0
272	SLE RA 20	16	-35	2112	1.84	10.62	0
272	SLE RA 21	16	-37	2107	1.93	10.56	0
272	SLE FR 1	14	-29	1903	1.52	9.21	0
272	SLE FR 2	14	-29	1902	1.55	9.19	0
272	SLE FR 3	14	-29	1910	1.54	9.26	0
272	SLE FR 4	15	-31	1960	1.63	9.58	0
272	SLE FR 5	15	-31	1967	1.62	9.64	0
272	SLE FR 6	15	-31	2000	1.65	9.85	0
272	SLE QP 1	14	-29	1903	1.52	9.21	0
272	SLE QP 2	15	-30	1961	1.6	9.6	0
272	SLD 1	11	-23	1881	1.34	15.64	0
272	SLD 2	11	-23	1881	1.34	15.64	0
272	SLD 3	9	-445	1730	20.18	13.48	0
272	SLD 4	9	-445	1730	20.18	13.48	0

Nodo	Cont.	Reazione a traslazione			Reazione a rotazione		
Ind.	N.br.	x	y	z	x	y	z
272	SLD 5	17	613	2166	-27.06	14.68	0
272	SLD 6	17	613	2166	-27.06	14.68	0
272	SLD 7	10	-796	1663	35.76	7.49	0
272	SLD 8	10	-796	1663	35.76	7.49	0
272	SLD 9	19	735	2260	-32.55	11.7	0
272	SLD 10	19	735	2260	-32.55	11.7	0
272	SLD 11	13	-674	1757	30.26	4.51	0
272	SLD 12	13	-674	1757	30.26	4.51	0
272	SLD 13	21	385	2193	-16.98	5.71	0
272	SLD 14	21	385	2193	-16.98	5.71	0
272	SLD 15	18	-38	2042	1.86	3.55	0
272	SLD 16	18	-38	2042	1.86	3.55	0
272	SLV 1	6	-13	1771	1	23.96	0.01
272	SLV 2	6	-13	1771	1	23.96	0.01
272	SLV 3	1	-1009	1407	45.43	18.61	0.01
272	SLV 4	1	-1009	1407	45.43	18.61	0.01
272	SLV 5	20	1486	2457	-65.97	22.01	0
272	SLV 6	20	1486	2457	-65.97	22.01	0
272	SLV 7	3	-1835	1242	82.14	4.19	0.01
272	SLV 8	3	-1835	1242	82.14	4.19	0.01
272	SLV 9	26	1774	2680	-78.94	15	-0.01
272	SLV 10	26	1774	2680	-78.94	15	-0.01
272	SLV 11	10	-1547	1466	69.17	-2.82	0
272	SLV 12	10	-1547	1466	69.17	-2.82	0
272	SLV 13	29	948	2516	-42.23	0.58	-0.01
272	SLV 14	29	948	2516	-42.23	0.58	-0.01
272	SLV 15	24	-48	2151	2.2	-4.76	-0.01
272	SLV 16	24	-48	2151	2.2	-4.76	-0.01
273	SLU 1	-4	-4	3021	-0.35	-3.37	0.01
273	SLU 2	-4	-4	3020	-0.36	-3.36	0.01
273	SLU 3	-4	-1	3082	-0.44	-3.45	0.01
273	SLU 4	-4	-1	3081	-0.44	-3.45	0.01
273	SLU 5	-4	0	3037	-0.45	-3.39	0.01
273	SLU 6	-4	3	3099	-0.52	-3.47	0.01
273	SLU 7	-4	3	3098	-0.53	-3.47	0.01
273	SLU 8	-4	3	3055	-0.53	-3.41	0.01
273	SLU 9	-4	4	3054	-0.53	-3.41	0.01
273	SLU 10	-5	-15	3476	-0.11	-4.04	0.01
273	SLU 11	-5	-13	3537	-0.18	-4.13	0.01
273	SLU 12	-5	-12	3537	-0.19	-4.13	0.01
273	SLU 13	-5	-11	3493	-0.2	-4.07	0.01
273	SLU 14	-5	-9	3554	-0.27	-4.15	0.01
273	SLU 15	-5	-9	3554	-0.28	-4.15	0.01
273	SLU 16	-5	-8	3511	-0.27	-4.1	0.01
273	SLU 17	-5	-8	3510	-0.28	-4.09	0.01
273	SLU 18	-6	-21	3672	0.01	-4.34	0.01
273	SLU 19	-6	-20	3672	0	-4.34	0.01
273	SLU 20	-6	-17	3689	-0.08	-4.36	0.01
273	SLU 21	-6	-16	3688	-0.09	-4.36	0.01
273	SLU 22	-5	-14	3482	-0.23	-4.03	0.01
273	SLU 23	-5	-13	3481	-0.24	-4.03	0.01
273	SLU 24	-5	-11	3542	-0.32	-4.11	0.01
273	SLU 25	-5	-10	3542	-0.32	-4.11	0.01
273	SLU 26	-5	-9	3498	-0.33	-4.05	0.01
273	SLU 27	-5	-7	3559	-0.4	-4.14	0.01
273	SLU 28	-5	-6	3559	-0.41	-4.14	0.01
273	SLU 29	-5	-6	3515	-0.41	-4.08	0.01
273	SLU 30	-5	-6	3515	-0.41	-4.08	0.01
273	SLU 31	-6	-24	3936	0.01	-4.71	0.01
273	SLU 32	-6	-22	3998	-0.07	-4.8	0.01
273	SLU 33	-6	-22	3997	-0.07	-4.79	0.01
273	SLU 34	-6	-21	3953	-0.08	-4.74	0.01
273	SLU 35	-6	-18	4015	-0.15	-4.82	0.01
273	SLU 36	-6	-18	4014	-0.16	-4.82	0.01
273	SLU 37	-6	-17	3971	-0.16	-4.76	0.01
273	SLU 38	-6	-17	3971	-0.16	-4.76	0.01
273	SLU 39	-6	-30	4133	0.13	-5.01	0.01
273	SLU 40	-6	-29	4132	0.12	-5	0.01
273	SLU 41	-6	-26	4149	0.04	-5.03	0.01
273	SLU 42	-6	-26	4149	0.03	-5.03	0.01
273	SLU 43	-5	-2	3770	-0.5	-4.15	0.01
273	SLU 44	-5	-2	3769	-0.51	-4.14	0.01
273	SLU 45	-5	1	3830	-0.58	-4.23	0.01
273	SLU 46	-5	1	3830	-0.59	-4.23	0.01
273	SLU 47	-5	2	3786	-0.6	-4.17	0.01
273	SLU 48	-5	4	3847	-0.67	-4.25	0.01
273	SLU 49	-5	5	3847	-0.68	-4.25	0.01
273	SLU 50	-5	5	3803	-0.67	-4.19	0.01
273	SLU 51	-5	6	3803	-0.68	-4.19	0.01
273	SLU 52	-6	-13	4224	-0.26	-4.82	0.01
273	SLU 53	-6	-11	4286	-0.33	-4.91	0.01
273	SLU 54	-6	-11	4285	-0.34	-4.91	0.01
273	SLU 55	-6	-9	4241	-0.34	-4.85	0.01
273	SLU 56	-6	-7	4303	-0.42	-4.93	0.01
273	SLU 57	-6	-7	4302	-0.43	-4.93	0.01
273	SLU 58	-6	-6	4259	-0.42	-4.88	0.01
273	SLU 59	-6	-6	4259	-0.43	-4.87	0.01
273	SLU 60	-6	-19	4421	-0.14	-5.12	0.01
273	SLU 61	-6	-18	4420	-0.14	-5.12	0.01
273	SLU 62	-7	-15	4437	-0.22	-5.14	0.01
273	SLU 63	-7	-15	4437	-0.23	-5.14	0.01

Nodo	Cont.	Reazione a traslazione			Reazione a rotazione		
Ind.	N.br.	x	y	z	x	y	z
273	SLU 64	-6	-12	4230	-0.38	-4.81	0.01
273	SLU 65	-6	-11	4229	-0.39	-4.81	0.01
273	SLU 66	-6	-9	4291	-0.46	-4.89	0.01
273	SLU 67	-6	-8	4290	-0.47	-4.89	0.01
273	SLU 68	-6	-7	4246	-0.48	-4.83	0.01
273	SLU 69	-6	-5	4308	-0.55	-4.92	0.01
273	SLU 70	-6	-5	4307	-0.56	-4.92	0.01
273	SLU 71	-6	-4	4264	-0.55	-4.86	0.01
273	SLU 72	-6	-4	4263	-0.56	-4.86	0.01
273	SLU 73	-7	-23	4685	-0.14	-5.49	0.02
273	SLU 74	-7	-20	4746	-0.21	-5.58	0.02
273	SLU 75	-7	-20	4746	-0.22	-5.57	0.02
273	SLU 76	-7	-19	4702	-0.23	-5.52	0.02
273	SLU 77	-7	-16	4763	-0.3	-5.6	0.02
273	SLU 78	-7	-16	4763	-0.31	-5.6	0.02
273	SLU 79	-7	-15	4720	-0.3	-5.54	0.02
273	SLU 80	-7	-15	4719	-0.31	-5.54	0.02
273	SLU 81	-7	-28	4881	-0.02	-5.79	0.02
273	SLU 82	-7	-28	4880	-0.03	-5.78	0.02
273	SLU 83	-7	-24	4898	-0.11	-5.81	0.02
273	SLU 84	-7	-24	4897	-0.11	-5.81	0.02
273	SLE RA 1	-4	-7	3153	-0.32	-3.56	0.01
273	SLE RA 2	-4	-7	3152	-0.32	-3.55	0.01
273	SLE RA 3	-5	-5	3193	-0.37	-3.61	0.01
273	SLE RA 4	-5	-5	3193	-0.38	-3.61	0.01
273	SLE RA 5	-4	-4	3163	-0.38	-3.57	0.01
273	SLE RA 6	-5	-2	3204	-0.43	-3.63	0.01
273	SLE RA 7	-5	-2	3204	-0.44	-3.63	0.01
273	SLE RA 8	-5	-2	3175	-0.43	-3.59	0.01
273	SLE RA 9	-5	-2	3175	-0.44	-3.59	0.01
273	SLE RA 10	-5	-14	3456	-0.16	-4.01	0.01
273	SLE RA 11	-5	-13	3497	-0.21	-4.06	0.01
273	SLE RA 12	-5	-12	3497	-0.21	-4.06	0.01
273	SLE RA 13	-5	-12	3467	-0.22	-4.02	0.01
273	SLE RA 14	-5	-10	3508	-0.26	-4.08	0.01
273	SLE RA 15	-5	-10	3508	-0.27	-4.08	0.01
273	SLE RA 16	-5	-9	3479	-0.27	-4.04	0.01
273	SLE RA 17	-5	-9	3479	-0.27	-4.04	0.01
273	SLE RA 18	-5	-18	3587	-0.08	-4.2	0.01
273	SLE RA 19	-5	-18	3586	-0.08	-4.2	0.01
273	SLE RA 20	-5	-15	3598	-0.14	-4.22	0.01
273	SLE RA 21	-5	-15	3598	-0.14	-4.22	0.01
273	SLE FR 1	-4	-7	3153	-0.32	-3.56	0.01
273	SLE FR 2	-4	-7	3153	-0.32	-3.56	0.01
273	SLE FR 3	-4	-6	3157	-0.34	-3.56	0.01
273	SLE FR 4	-5	-10	3283	-0.25	-3.75	0.01
273	SLE FR 5	-5	-9	3287	-0.27	-3.76	0.01
273	SLE FR 6	-5	-12	3370	-0.2	-3.88	0.01
273	SLE QP 1	-4	-7	3153	-0.32	-3.56	0.01
273	SLE QP 2	-5	-10	3283	-0.24	-3.75	0.01
273	SLD 1	-2	350	2868	-15.56	-1.12	0.01
273	SLD 2	-2	350	2868	-15.56	-1.12	0.01
273	SLD 3	-6	-107	2369	4.19	-3.43	0
273	SLD 4	-6	-107	2369	4.19	-3.43	0
273	SLD 5	3	790	3916	-34.79	0.54	0.02
273	SLD 6	3	790	3916	-34.79	0.54	0.02
273	SLD 7	-12	-732	2251	31.03	-7.15	0
273	SLD 8	-12	-732	2251	31.03	-7.15	0
273	SLD 9	3	711	4315	-31.52	-0.35	0.02
273	SLD 10	3	711	4315	-31.52	-0.35	0.02
273	SLD 11	-13	-810	2649	34.3	-8.04	0.01
273	SLD 12	-13	-810	2649	34.3	-8.04	0.01
273	SLD 13	-3	86	4197	-4.68	-4.07	0.02
273	SLD 14	-3	86	4197	-4.68	-4.07	0.02
273	SLD 15	-8	-370	3697	15.07	-6.38	0.02
273	SLD 16	-8	-370	3697	15.07	-6.38	0.02
273	SLV 1	3	832	2293	-36.18	2.69	0
273	SLV 2	3	832	2293	-36.18	2.69	0
273	SLV 3	-9	-244	1102	10.43	-3.2	-0.01
273	SLV 4	-9	-244	1102	10.43	-3.2	-0.01
273	SLV 5	16	1874	4792	-81.72	7.12	0.03
273	SLV 6	16	1874	4792	-81.72	7.12	0.03
273	SLV 7	-24	-1712	823	73.65	-12.52	-0.01
273	SLV 8	-24	-1712	823	73.65	-12.52	-0.01
273	SLV 9	14	1692	5743	-74.14	5.02	0.04
273	SLV 10	14	1692	5743	-74.14	5.02	0.04
273	SLV 11	-25	-1894	1774	81.23	-14.62	0
273	SLV 12	-25	-1894	1774	81.23	-14.62	0
273	SLV 13	-1	224	5463	-10.92	-4.3	0.03
273	SLV 14	-1	224	5463	-10.92	-4.3	0.03
273	SLV 15	-13	-852	4273	35.69	-10.19	0.02
273	SLV 16	-13	-852	4273	35.69	-10.19	0.02
274	SLU 1	10	-465	4796	19.79	6.67	0
274	SLU 2	10	-380	4686	16.12	7.49	0
274	SLU 3	10	-478	4975	20.38	6.95	0
274	SLU 4	10	-427	4909	18.18	7.44	0
274	SLU 5	10	-386	4826	16.42	7.71	0
274	SLU 6	10	-484	5115	20.68	7.17	0
274	SLU 7	11	-433	5049	18.48	7.66	0
274	SLU 8	10	-477	5077	20.38	7.11	0
274	SLU 9	10	-426	5011	18.18	7.6	0

Nodo	Cont.	Reazione a traslazione			Reazione a rotazione		
Ind.	N.br.	x	y	z	x	y	z
274	SLU 10	11	-431	5212	18.35	8.25	0
274	SLU 11	11	-530	5500	22.61	7.71	0
274	SLU 12	11	-479	5434	20.42	8.2	0
274	SLU 13	11	-438	5352	18.65	8.47	0
274	SLU 14	11	-536	5641	22.91	7.93	0
274	SLU 15	12	-485	5575	20.71	8.42	0
274	SLU 16	11	-529	5603	22.62	7.87	0
274	SLU 17	12	-478	5537	20.42	8.36	0
274	SLU 18	11	-539	5547	22.98	7.76	0
274	SLU 19	11	-488	5481	20.78	8.25	0
274	SLU 20	12	-545	5688	23.28	7.98	0
274	SLU 21	12	-494	5622	21.08	8.47	0
274	SLU 22	11	-518	5328	22.05	7.44	0
274	SLU 23	11	-432	5219	18.39	8.26	0
274	SLU 24	11	-531	5507	22.64	7.72	0
274	SLU 25	11	-480	5441	20.45	8.22	0
274	SLU 26	11	-438	5359	18.68	8.49	0
274	SLU 27	12	-537	5648	22.94	7.95	0
274	SLU 28	12	-486	5582	20.74	8.44	0
274	SLU 29	11	-530	5610	22.65	7.89	0
274	SLU 30	12	-479	5544	20.45	8.38	0
274	SLU 31	12	-484	5744	20.62	9.03	0
274	SLU 32	12	-583	6033	24.88	8.49	0
274	SLU 33	12	-531	5967	22.68	8.98	0
274	SLU 34	12	-490	5885	20.92	9.25	0
274	SLU 35	13	-589	6174	25.18	8.71	0
274	SLU 36	13	-538	6108	22.98	9.2	0
274	SLU 37	13	-582	6136	24.88	8.65	0
274	SLU 38	13	-530	6070	22.68	9.14	0
274	SLU 39	12	-592	6080	25.24	8.53	0
274	SLU 40	13	-540	6014	23.04	9.03	0
274	SLU 41	13	-598	6220	25.54	8.76	0
274	SLU 42	13	-547	6154	23.34	9.25	0
274	SLU 43	12	-587	6052	24.94	8.4	0
274	SLU 44	12	-501	5942	21.28	9.22	0
274	SLU 45	13	-600	6231	25.54	8.68	0
274	SLU 46	13	-549	6165	23.34	9.17	0
274	SLU 47	13	-507	6082	21.58	9.44	0
274	SLU 48	13	-606	6371	25.84	8.9	0
274	SLU 49	13	-555	6305	23.64	9.39	0
274	SLU 50	13	-599	6333	25.54	8.84	0
274	SLU 51	13	-548	6267	23.34	9.33	0
274	SLU 52	14	-553	6467	23.51	9.98	0
274	SLU 53	14	-652	6756	27.77	9.44	0
274	SLU 54	14	-600	6690	25.57	9.93	0
274	SLU 55	14	-559	6608	23.81	10.2	0
274	SLU 56	14	-658	6897	28.07	9.66	0
274	SLU 57	14	-607	6831	25.87	10.15	0
274	SLU 58	14	-651	6859	27.78	9.61	0
274	SLU 59	14	-599	6793	25.58	10.1	0
274	SLU 60	14	-661	6803	28.14	9.49	0
274	SLU 61	14	-609	6737	25.94	9.98	0
274	SLU 62	14	-667	6944	28.44	9.71	0
274	SLU 63	14	-616	6878	26.24	10.2	0
274	SLU 64	13	-639	6584	27.21	9.18	0
274	SLU 65	14	-554	6474	23.54	10	0
274	SLU 66	14	-652	6763	27.8	9.46	0
274	SLU 67	14	-601	6697	25.6	9.95	0
274	SLU 68	14	-560	6615	23.84	10.22	0
274	SLU 69	14	-659	6904	28.1	9.68	0
274	SLU 70	14	-607	6838	25.9	10.17	0
274	SLU 71	14	-651	6866	27.81	9.62	0
274	SLU 72	14	-600	6800	25.61	10.11	0
274	SLU 73	15	-605	7000	25.78	10.76	0
274	SLU 74	15	-704	7289	30.04	10.22	-0.01
274	SLU 75	15	-653	7223	27.84	10.71	-0.01
274	SLU 76	15	-612	7141	26.08	10.98	-0.01
274	SLU 77	15	-710	7430	30.34	10.44	-0.01
274	SLU 78	15	-659	7364	28.14	10.93	-0.01
274	SLU 79	15	-703	7392	30.04	10.38	-0.01
274	SLU 80	15	-652	7326	27.84	10.88	-0.01
274	SLU 81	15	-713	7336	30.4	10.27	-0.01
274	SLU 82	15	-662	7270	28.2	10.76	-0.01
274	SLU 83	15	-719	7476	30.7	10.49	-0.01
274	SLU 84	15	-668	7410	28.5	10.98	-0.01
274	SLE RA 1	10	-480	4948	20.43	6.89	0
274	SLE RA 2	10	-423	4875	17.99	7.44	0
274	SLE RA 3	10	-489	5067	20.83	7.07	0
274	SLE RA 4	10	-455	5023	19.36	7.4	0
274	SLE RA 5	10	-427	4968	18.19	7.58	0
274	SLE RA 6	10	-493	5161	21.03	7.22	0
274	SLE RA 7	11	-459	5117	19.56	7.55	0
274	SLE RA 8	10	-488	5135	20.83	7.18	0
274	SLE RA 9	11	-454	5091	19.36	7.51	0
274	SLE RA 10	11	-458	5225	19.48	7.94	0
274	SLE RA 11	11	-524	5418	22.32	7.58	0
274	SLE RA 12	11	-489	5374	20.85	7.91	0
274	SLE RA 13	11	-462	5319	19.68	8.09	0
274	SLE RA 14	11	-528	5512	22.52	7.73	0
274	SLE RA 15	11	-493	5468	21.05	8.06	0
274	SLE RA 16	11	-523	5486	22.32	7.69	0

Nodo	Cont.	Reazione a traslazione			Reazione a rotazione		
Ind.	N.br.	x	y	z	x	y	z
274	SLE RA 17	11	-489	5442	20.85	8.02	0
274	SLE RA 18	11	-530	5449	22.56	7.62	0
274	SLE RA 19	11	-495	5405	21.09	7.94	0
274	SLE RA 20	11	-534	5542	22.76	7.76	0
274	SLE RA 21	11	-499	5498	21.29	8.09	0
274	SLE FR 1	10	-480	4948	20.43	6.89	0
274	SLE FR 2	10	-469	4933	19.94	7	0
274	SLE FR 3	10	-482	4985	20.51	6.95	0
274	SLE FR 4	10	-484	5083	20.58	7.22	0
274	SLE FR 5	10	-497	5136	21.15	7.17	0
274	SLE FR 6	11	-505	5198	21.5	7.25	0
274	SLE QP 1	10	-480	4948	20.43	6.89	0
274	SLE QP 2	10	-495	5098	21.07	7.11	0
274	SLD 1	22	-358	6005	14.7	28.78	-0.01
274	SLD 2	22	-358	6005	14.7	28.78	-0.01
274	SLD 3	32	-884	6615	37.38	19.36	0
274	SLD 4	32	-884	6615	37.38	19.36	0
274	SLD 5	-2	344	4445	-15.23	27.9	-0.01
274	SLD 6	-2	344	4445	-15.23	27.9	-0.01
274	SLD 7	32	-1410	6478	60.35	-3.51	0
274	SLD 8	32	-1410	6478	60.35	-3.51	0
274	SLD 9	-12	420	3718	-18.21	17.72	-0.01
274	SLD 10	-12	420	3718	-18.21	17.72	-0.01
274	SLD 11	22	-1334	5751	57.37	-13.68	0.01
274	SLD 12	22	-1334	5751	57.37	-13.68	0.01
274	SLD 13	-11	-105	3581	4.77	-5.14	0
274	SLD 14	-11	-105	3581	4.77	-5.14	0
274	SLD 15	-1	-631	4191	27.44	-14.56	0
274	SLD 16	-1	-631	4191	27.44	-14.56	0
274	SLV 1	37	-181	7156	6.47	59.69	-0.02
274	SLV 2	37	-181	7156	6.47	59.69	-0.02
274	SLV 3	63	-1407	8590	59.28	35.79	0
274	SLV 4	63	-1407	8590	59.28	35.79	0
274	SLV 5	-21	1457	3541	-63.41	59.13	-0.03
274	SLV 6	-21	1457	3541	-63.41	59.13	-0.03
274	SLV 7	65	-2627	8320	112.63	-20.54	0.02
274	SLV 8	65	-2627	8320	112.63	-20.54	0.02
274	SLV 9	-45	1637	1876	-70.49	34.75	-0.02
274	SLV 10	-45	1637	1876	-70.49	34.75	-0.02
274	SLV 11	41	-2447	6655	105.55	-44.91	0.02
274	SLV 12	41	-2447	6655	105.55	-44.91	0.02
274	SLV 13	-42	417	1606	-17.14	-21.58	0
274	SLV 14	-42	417	1606	-17.14	-21.58	0
274	SLV 15	-17	-809	3040	35.68	-45.48	0.01
274	SLV 16	-17	-809	3040	35.68	-45.48	0.01
275	SLU 1	8	-680	4827	27.8	5.59	0
275	SLU 2	7	-570	4714	23.15	4.42	0
275	SLU 3	8	-704	5005	28.8	5.8	0
275	SLU 4	8	-638	4937	26	5.11	0
275	SLU 5	8	-585	4852	23.81	4.59	0
275	SLU 6	9	-720	5142	29.45	5.97	0
275	SLU 7	8	-653	5075	26.66	5.27	0
275	SLU 8	9	-711	5103	29.12	5.91	0
275	SLU 9	8	-645	5035	26.33	5.21	0
275	SLU 10	8	-656	5247	26.65	5.18	0
275	SLU 11	10	-790	5537	32.29	6.56	0
275	SLU 12	9	-724	5470	29.5	5.86	0
275	SLU 13	9	-671	5385	27.3	5.34	0
275	SLU 14	10	-805	5675	32.95	6.72	0
275	SLU 15	9	-739	5608	30.16	6.02	0
275	SLU 16	10	-797	5636	32.62	6.66	0
275	SLU 17	9	-731	5568	29.83	5.97	0
275	SLU 18	10	-803	5588	32.8	6.66	0
275	SLU 19	9	-736	5520	30.01	5.96	0
275	SLU 20	10	-818	5726	33.46	6.82	0
275	SLU 21	10	-752	5658	30.67	6.13	0
275	SLU 22	9	-765	5363	31.28	6.33	0
275	SLU 23	8	-655	5250	26.63	5.16	0
275	SLU 24	10	-789	5541	32.27	6.55	0
275	SLU 25	9	-723	5473	29.48	5.85	0
275	SLU 26	9	-670	5388	27.29	5.33	0
275	SLU 27	10	-805	5679	32.93	6.71	0
275	SLU 28	9	-738	5611	30.14	6.01	0
275	SLU 29	10	-796	5639	32.6	6.65	0
275	SLU 30	9	-730	5572	29.81	5.96	0
275	SLU 31	10	-741	5783	30.13	5.92	0
275	SLU 32	11	-875	6074	35.77	7.3	0
275	SLU 33	10	-809	6006	32.98	6.6	0
275	SLU 34	10	-756	5921	30.78	6.08	0
275	SLU 35	11	-890	6212	36.43	7.46	0
275	SLU 36	11	-824	6144	33.64	6.76	0
275	SLU 37	11	-882	6172	36.1	7.41	0
275	SLU 38	10	-816	6104	33.31	6.71	0
275	SLU 39	11	-888	6125	36.28	7.4	0
275	SLU 40	10	-822	6057	33.49	6.71	0
275	SLU 41	11	-903	6262	36.94	7.57	0
275	SLU 42	11	-837	6195	34.15	6.87	0
275	SLU 43	10	-855	6091	34.95	7.01	0
275	SLU 44	9	-745	5978	30.3	5.84	0
275	SLU 45	11	-879	6269	35.94	7.23	0
275	SLU 46	10	-813	6201	33.15	6.53	0

Nodo	Cont.	Reazione a traslazione			Reazione a rotazione		
Ind.	N.br.	x	y	z	x	y	z
275	SLU 47	10	-760	6116	30.95	6.01	0
275	SLU 48	11	-894	6407	36.6	7.39	0
275	SLU 49	10	-828	6339	33.81	6.69	0
275	SLU 50	11	-886	6367	36.27	7.33	0
275	SLU 51	10	-820	6299	33.48	6.63	0
275	SLU 52	11	-830	6511	33.79	6.6	0
275	SLU 53	12	-965	6801	39.44	7.98	0
275	SLU 54	11	-898	6734	36.65	7.28	0
275	SLU 55	11	-846	6649	34.45	6.76	0
275	SLU 56	12	-980	6939	40.1	8.14	0
275	SLU 57	11	-914	6872	37.31	7.44	0
275	SLU 58	12	-972	6900	39.77	8.09	0
275	SLU 59	11	-906	6832	36.97	7.39	0
275	SLU 60	12	-977	6852	39.95	8.08	0
275	SLU 61	11	-911	6784	37.16	7.38	0
275	SLU 62	12	-993	6990	40.61	8.25	0
275	SLU 63	12	-927	6922	37.82	7.55	0
275	SLU 64	11	-940	6627	38.43	7.75	0
275	SLU 65	11	-830	6515	33.77	6.59	0
275	SLU 66	12	-964	6805	39.42	7.97	0
275	SLU 67	11	-898	6737	36.63	7.27	0
275	SLU 68	11	-845	6653	34.43	6.75	0
275	SLU 69	12	-979	6943	40.08	8.13	0
275	SLU 70	11	-913	6875	37.29	7.43	0
275	SLU 71	12	-971	6903	39.75	8.08	0
275	SLU 72	11	-905	6836	36.96	7.38	0
275	SLU 73	12	-916	7047	37.27	7.34	0
275	SLU 74	13	-1050	7338	42.92	8.72	0
275	SLU 75	12	-983	7270	40.13	8.02	0
275	SLU 76	12	-931	7185	37.93	7.5	0
275	SLU 77	13	-1065	7476	43.58	8.88	0
275	SLU 78	13	-999	7408	40.79	8.19	0
275	SLU 79	13	-1057	7436	43.25	8.83	0
275	SLU 80	12	-991	7369	40.45	8.13	0
275	SLU 81	13	-1063	7389	43.43	8.83	0
275	SLU 82	12	-996	7321	40.64	8.13	0
275	SLU 83	13	-1078	7527	44.09	8.99	0
275	SLU 84	13	-1012	7459	41.29	8.29	0
275	SLE RA 1	8	-704	4980	28.8	5.8	0
275	SLE RA 2	8	-631	4905	25.69	5.02	0
275	SLE RA 3	9	-720	5099	29.46	5.94	0
275	SLE RA 4	8	-676	5053	27.6	5.48	0
275	SLE RA 5	8	-641	4997	26.13	5.13	0
275	SLE RA 6	9	-731	5191	29.9	6.05	0
275	SLE RA 7	9	-687	5145	28.04	5.59	0
275	SLE RA 8	9	-725	5164	29.68	6.02	0
275	SLE RA 9	9	-681	5119	27.81	5.55	0
275	SLE RA 10	9	-688	5260	28.03	5.52	0
275	SLE RA 11	9	-778	5454	31.79	6.45	0
275	SLE RA 12	9	-733	5409	29.93	5.98	0
275	SLE RA 13	9	-698	5352	28.47	5.63	0
275	SLE RA 14	10	-788	5546	32.23	6.55	0
275	SLE RA 15	9	-744	5501	30.37	6.09	0
275	SLE RA 16	10	-782	5519	32.01	6.52	0
275	SLE RA 17	9	-738	5474	30.15	6.05	0
275	SLE RA 18	10	-786	5488	32.13	6.52	0
275	SLE RA 19	9	-742	5442	30.27	6.05	0
275	SLE RA 20	10	-796	5580	32.57	6.62	0
275	SLE RA 21	9	-752	5534	30.71	6.16	0
275	SLE FR 1	8	-704	4980	28.8	5.8	0
275	SLE FR 2	8	-690	4965	28.18	5.64	0
275	SLE FR 3	9	-709	5017	28.97	5.84	0
275	SLE FR 4	9	-714	5117	29.18	5.86	0
275	SLE FR 5	9	-733	5169	29.97	6.06	0
275	SLE FR 6	9	-745	5234	30.46	6.16	0
275	SLE QP 1	8	-704	4980	28.8	5.8	0
275	SLE QP 2	9	-729	5132	29.8	6.01	0
275	SLD 1	17	-278	3515	10.42	16.92	0
275	SLD 2	17	-278	3515	10.42	16.92	0
275	SLD 3	27	-865	4069	35.64	24.93	0
275	SLD 4	27	-865	4069	35.64	24.93	0
275	SLD 5	-3	296	3806	-14.26	-2.88	0.01
275	SLD 6	-3	296	3806	-14.26	-2.88	0.01
275	SLD 7	28	-1660	5654	69.8	23.85	-0.01
275	SLD 8	28	-1660	5654	69.8	23.85	-0.01
275	SLD 9	-11	202	4611	-10.2	-11.82	0.01
275	SLD 10	-11	202	4611	-10.2	-11.82	0.01
275	SLD 11	20	-1754	6458	73.86	14.9	-0.01
275	SLD 12	20	-1754	6458	73.86	14.9	-0.01
275	SLD 13	-9	-593	6196	23.96	-12.91	0
275	SLD 14	-9	-593	6196	23.96	-12.91	0
275	SLD 15	0	-1180	6750	49.18	-4.89	-0.01
275	SLD 16	0	-1180	6750	49.18	-4.89	-0.01
275	SLV 1	29	322	1419	-15.33	31.71	0.01
275	SLV 2	29	322	1419	-15.33	31.71	0.01
275	SLV 3	52	-1046	2723	43.46	52.02	-0.01
275	SLV 4	52	-1046	2723	43.46	52.02	-0.01
275	SLV 5	-21	1661	2041	-72.9	-17.08	0.02
275	SLV 6	-21	1661	2041	-72.9	-17.08	0.02
275	SLV 7	58	-2899	6387	123.05	50.61	-0.03
275	SLV 8	58	-2899	6387	123.05	50.61	-0.03

Nodo	Cont.	Reazione a traslazione			Reazione a rotazione		
Ind.	N.br.	x	y	z	x	y	z
275	SLV 9	-40	1441	3878	-63.46	-38.59	0.02
275	SLV 10	-40	1441	3878	-63.46	-38.59	0.02
275	SLV 11	38	-3119	8223	132.49	29.1	-0.03
275	SLV 12	38	-3119	8223	132.49	29.1	-0.03
275	SLV 13	-35	-412	7542	16.14	-39.99	0
275	SLV 14	-35	-412	7542	16.14	-39.99	0
275	SLV 15	-11	-1780	8845	74.92	-19.69	-0.02
275	SLV 16	-11	-1780	8845	74.92	-19.69	-0.02
276	SLU 1	11	-6	2810	-0.4	8.63	-0.01
276	SLU 2	11	-13	2791	-0.12	8.55	-0.01
276	SLU 3	11	-12	2888	-0.21	8.91	-0.01
276	SLU 4	11	-16	2876	-0.05	8.86	-0.01
276	SLU 5	11	-20	2839	0.09	8.71	-0.01
276	SLU 6	12	-19	2937	0.01	9.07	-0.01
276	SLU 7	12	-23	2925	0.17	9.02	-0.01
276	SLU 8	11	-19	2908	0.04	8.96	-0.01
276	SLU 9	11	-24	2896	0.21	8.91	-0.01
276	SLU 10	13	-11	3132	-0.27	9.83	-0.01
276	SLU 11	13	-11	3229	-0.35	10.19	-0.01
276	SLU 12	13	-15	3217	-0.19	10.14	-0.01
276	SLU 13	13	-18	3181	-0.05	10	-0.01
276	SLU 14	13	-17	3278	-0.14	10.35	-0.01
276	SLU 15	13	-22	3266	0.03	10.3	-0.01
276	SLU 16	13	-18	3249	-0.1	10.24	-0.01
276	SLU 17	13	-22	3237	0.06	10.19	-0.01
276	SLU 18	13	-4	3298	-0.6	10.47	-0.01
276	SLU 19	13	-8	3286	-0.44	10.42	-0.01
276	SLU 20	14	-11	3347	-0.39	10.63	-0.01
276	SLU 21	14	-15	3335	-0.22	10.58	-0.01
276	SLU 22	13	-7	3147	-0.44	9.89	-0.01
276	SLU 23	13	-14	3127	-0.17	9.8	-0.01
276	SLU 24	13	-14	3225	-0.26	10.16	-0.01
276	SLU 25	13	-18	3213	-0.09	10.11	-0.01
276	SLU 26	13	-21	3176	0.05	9.96	-0.01
276	SLU 27	13	-20	3274	-0.04	10.32	-0.01
276	SLU 28	13	-25	3262	0.13	10.27	-0.01
276	SLU 29	13	-21	3245	0	10.21	-0.01
276	SLU 30	13	-25	3233	0.16	10.16	-0.01
276	SLU 31	14	-13	3468	-0.32	11.08	-0.01
276	SLU 32	15	-12	3566	-0.4	11.44	-0.02
276	SLU 33	15	-16	3554	-0.24	11.39	-0.02
276	SLU 34	14	-20	3517	-0.1	11.25	-0.02
276	SLU 35	15	-19	3615	-0.18	11.61	-0.02
276	SLU 36	15	-23	3603	-0.02	11.55	-0.02
276	SLU 37	15	-20	3586	-0.15	11.5	-0.02
276	SLU 38	15	-24	3574	0.01	11.44	-0.02
276	SLU 39	15	-6	3635	-0.65	11.72	-0.02
276	SLU 40	15	-10	3623	-0.49	11.67	-0.02
276	SLU 41	15	-12	3683	-0.43	11.88	-0.02
276	SLU 42	15	-17	3671	-0.27	11.83	-0.02
276	SLU 43	14	-7	3538	-0.5	10.8	-0.01
276	SLU 44	14	-14	3518	-0.23	10.71	-0.01
276	SLU 45	14	-13	3616	-0.31	11.07	-0.01
276	SLU 46	14	-17	3604	-0.15	11.02	-0.01
276	SLU 47	14	-21	3567	-0.01	10.87	-0.01
276	SLU 48	14	-20	3664	-0.09	11.23	-0.02
276	SLU 49	14	-24	3653	0.07	11.18	-0.02
276	SLU 50	14	-21	3636	-0.06	11.12	-0.01
276	SLU 51	14	-25	3624	0.1	11.07	-0.01
276	SLU 52	15	-13	3859	-0.37	11.99	-0.02
276	SLU 53	16	-12	3957	-0.46	12.35	-0.02
276	SLU 54	16	-16	3945	-0.29	12.3	-0.02
276	SLU 55	16	-19	3908	-0.15	12.16	-0.02
276	SLU 56	16	-19	4006	-0.24	12.51	-0.02
276	SLU 57	16	-23	3994	-0.08	12.46	-0.02
276	SLU 58	16	-19	3977	-0.21	12.4	-0.02
276	SLU 59	16	-23	3965	-0.04	12.35	-0.02
276	SLU 60	16	-5	4026	-0.71	12.63	-0.02
276	SLU 61	16	-9	4014	-0.54	12.58	-0.02
276	SLU 62	16	-12	4074	-0.49	12.79	-0.02
276	SLU 63	16	-16	4062	-0.33	12.74	-0.02
276	SLU 64	15	-9	3875	-0.54	12.05	-0.02
276	SLU 65	15	-16	3855	-0.27	11.96	-0.02
276	SLU 66	16	-15	3952	-0.36	12.32	-0.02
276	SLU 67	16	-19	3940	-0.2	12.27	-0.02
276	SLU 68	15	-22	3904	-0.05	12.13	-0.02
276	SLU 69	16	-22	4001	-0.14	12.48	-0.02
276	SLU 70	16	-26	3989	0.02	12.43	-0.02
276	SLU 71	16	-22	3972	-0.11	12.37	-0.02
276	SLU 72	16	-26	3961	0.06	12.32	-0.02
276	SLU 73	17	-14	4196	-0.42	13.24	-0.02
276	SLU 74	17	-13	4294	-0.5	13.6	-0.02
276	SLU 75	17	-18	4282	-0.34	13.55	-0.02
276	SLU 76	17	-21	4245	-0.2	13.41	-0.02
276	SLU 77	18	-20	4342	-0.29	13.77	-0.02
276	SLU 78	18	-24	4330	-0.12	13.71	-0.02
276	SLU 79	17	-21	4314	-0.25	13.66	-0.02
276	SLU 80	17	-25	4302	-0.09	13.61	-0.02
276	SLU 81	18	-7	4362	-0.75	13.88	-0.02
276	SLU 82	18	-11	4350	-0.59	13.83	-0.02
276	SLU 83	18	-14	4411	-0.53	14.04	-0.02

Nodo	Cont.	Reazione a traslazione			Reazione a rotazione		
Ind.	N.br.	x	y	z	x	y	z
276	SLU 84	18	-18	4399	-0.37	13.99	-0.02
276	SLE RA 1	11	-6	2907	-0.41	8.99	-0.01
276	SLE RA 2	11	-11	2893	-0.23	8.93	-0.01
276	SLE RA 3	12	-10	2958	-0.28	9.17	-0.01
276	SLE RA 4	12	-13	2950	-0.18	9.14	-0.01
276	SLE RA 5	12	-15	2926	-0.08	9.04	-0.01
276	SLE RA 6	12	-15	2991	-0.14	9.28	-0.01
276	SLE RA 7	12	-18	2983	-0.03	9.25	-0.01
276	SLE RA 8	12	-15	2972	-0.12	9.21	-0.01
276	SLE RA 9	12	-18	2964	-0.01	9.18	-0.01
276	SLE RA 10	12	-10	3121	-0.33	9.79	-0.01
276	SLE RA 11	13	-9	3186	-0.38	10.03	-0.01
276	SLE RA 12	13	-12	3178	-0.27	9.99	-0.01
276	SLE RA 13	13	-15	3153	-0.18	9.9	-0.01
276	SLE RA 14	13	-14	3218	-0.24	10.14	-0.01
276	SLE RA 15	13	-17	3210	-0.13	10.1	-0.01
276	SLE RA 16	13	-14	3199	-0.21	10.07	-0.01
276	SLE RA 17	13	-17	3191	-0.11	10.03	-0.01
276	SLE RA 18	13	-5	3232	-0.55	10.21	-0.01
276	SLE RA 19	13	-8	3224	-0.44	10.18	-0.01
276	SLE RA 20	13	-10	3264	-0.4	10.32	-0.01
276	SLE RA 21	13	-12	3256	-0.29	10.29	-0.01
276	SLE FR 1	11	-6	2907	-0.41	8.99	-0.01
276	SLE FR 2	11	-7	2904	-0.37	8.98	-0.01
276	SLE FR 3	12	-8	2920	-0.35	9.04	-0.01
276	SLE FR 4	12	-7	3001	-0.41	9.35	-0.01
276	SLE FR 5	12	-8	3017	-0.39	9.4	-0.01
276	SLE FR 6	12	-6	3069	-0.48	9.6	-0.01
276	SLE QP 1	11	-6	2907	-0.41	8.99	-0.01
276	SLE QP 2	12	-6	3004	-0.45	9.36	-0.01
276	SLD 1	20	62	3046	-2.8	17.32	-0.02
276	SLD 2	20	62	3046	-2.8	17.32	-0.02
276	SLD 3	18	-476	3165	15.56	15.55	-0.02
276	SLD 4	18	-476	3165	15.56	15.55	-0.02
276	SLD 5	17	831	2838	-29	14.42	-0.02
276	SLD 6	17	831	2838	-29	14.42	-0.02
276	SLD 7	11	-964	3231	32.2	8.54	-0.01
276	SLD 8	11	-964	3231	32.2	8.54	-0.01
276	SLD 9	13	952	2777	-33.1	10.18	-0.01
276	SLD 10	13	952	2777	-33.1	10.18	-0.01
276	SLD 11	7	-843	3170	28.1	4.3	-0.01
276	SLD 12	7	-843	3170	28.1	4.3	-0.01
276	SLD 13	6	465	2844	-16.46	3.16	-0.01
276	SLD 14	6	465	2844	-16.46	3.16	-0.01
276	SLD 15	4	-74	2962	1.9	1.4	0
276	SLD 16	4	-74	2962	1.9	1.4	0
276	SLV 1	31	151	3115	-5.87	28.8	-0.03
276	SLV 2	31	151	3115	-5.87	28.8	-0.03
276	SLV 3	26	-1121	3401	37.5	24.47	-0.03
276	SLV 4	26	-1121	3401	37.5	24.47	-0.03
276	SLV 5	25	1970	2604	-67.86	21.74	-0.03
276	SLV 6	25	1970	2604	-67.86	21.74	-0.03
276	SLV 7	9	-2270	3557	76.72	7.34	-0.01
276	SLV 8	9	-2270	3557	76.72	7.34	-0.01
276	SLV 9	15	2258	2452	-77.62	11.38	-0.02
276	SLV 10	15	2258	2452	-77.62	11.38	-0.02
276	SLV 11	-1	-1982	3404	66.96	-3.03	0
276	SLV 12	-1	-1982	3404	66.96	-3.03	0
276	SLV 13	-2	1109	2607	-38.4	-5.76	0
276	SLV 14	-2	1109	2607	-38.4	-5.76	0
276	SLV 15	-7	-163	2893	4.97	-10.08	0.01
276	SLV 16	-7	-163	2893	4.97	-10.08	0.01
277	SLU 1	6	-131	2891	16.86	4.23	0
277	SLU 2	6	-131	2891	16.88	4.22	0
277	SLU 3	6	-131	2949	17.27	4.33	0
277	SLU 4	6	-131	2949	17.29	4.33	0
277	SLU 5	6	-129	2909	17.02	4.26	0
277	SLU 6	6	-129	2968	17.41	4.37	0
277	SLU 7	6	-129	2968	17.42	4.37	0
277	SLU 8	6	-126	2928	17.13	4.3	0
277	SLU 9	6	-126	2928	17.15	4.3	0
277	SLU 10	7	-158	3302	19.68	4.99	0
277	SLU 11	7	-158	3360	20.07	5.1	0
277	SLU 12	7	-158	3360	20.09	5.1	0
277	SLU 13	7	-155	3320	19.82	5.03	0
277	SLU 14	8	-156	3379	20.21	5.14	0
277	SLU 15	8	-156	3378	20.23	5.14	0
277	SLU 16	7	-153	3339	19.93	5.07	0
277	SLU 17	7	-153	3339	19.95	5.07	0
277	SLU 18	8	-169	3478	20.86	5.32	0
277	SLU 19	8	-169	3478	20.87	5.32	0
277	SLU 20	8	-166	3497	20.99	5.36	0
277	SLU 21	8	-167	3496	21.01	5.36	0
277	SLU 22	7	-158	3309	19.69	4.99	0
277	SLU 23	7	-159	3308	19.71	4.99	0
277	SLU 24	7	-159	3367	20.11	5.1	0
277	SLU 25	7	-159	3367	20.12	5.1	0
277	SLU 26	7	-156	3327	19.85	5.03	0
277	SLU 27	7	-156	3386	20.25	5.14	0
277	SLU 28	7	-157	3385	20.26	5.14	0
277	SLU 29	7	-154	3346	19.97	5.07	0

Nodo	Cont.	Reazione a traslazione			Reazione a rotazione		
Ind.	N.br.	x	y	z	x	y	z
277	SLU 30	7	-154	3346	19.98	5.07	0
277	SLU 31	8	-185	3719	22.51	5.76	-0.01
277	SLU 32	9	-186	3778	22.91	5.87	-0.01
277	SLU 33	9	-186	3778	22.92	5.87	-0.01
277	SLU 34	8	-183	3738	22.65	5.8	-0.01
277	SLU 35	9	-183	3797	23.05	5.91	-0.01
277	SLU 36	9	-183	3796	23.06	5.91	-0.01
277	SLU 37	9	-180	3757	22.77	5.84	-0.01
277	SLU 38	9	-180	3757	22.78	5.84	-0.01
277	SLU 39	9	-196	3896	23.69	6.09	-0.01
277	SLU 40	9	-197	3896	23.71	6.09	-0.01
277	SLU 41	9	-194	3914	23.83	6.13	-0.01
277	SLU 42	9	-194	3914	23.84	6.13	-0.01
277	SLU 43	8	-160	3615	20.94	5.23	0
277	SLU 44	8	-161	3615	20.96	5.23	0
277	SLU 45	8	-161	3674	21.36	5.34	-0.01
277	SLU 46	8	-161	3673	21.37	5.34	-0.01
277	SLU 47	8	-158	3633	21.1	5.27	0
277	SLU 48	8	-159	3692	21.5	5.38	-0.01
277	SLU 49	8	-159	3692	21.51	5.38	-0.01
277	SLU 50	8	-156	3653	21.22	5.31	-0.01
277	SLU 51	8	-156	3652	21.23	5.31	-0.01
277	SLU 52	9	-188	4026	23.76	6	-0.01
277	SLU 53	9	-188	4084	24.16	6.11	-0.01
277	SLU 54	9	-188	4084	24.17	6.11	-0.01
277	SLU 55	9	-185	4044	23.9	6.04	-0.01
277	SLU 56	9	-185	4103	24.3	6.15	-0.01
277	SLU 57	9	-186	4103	24.31	6.15	-0.01
277	SLU 58	9	-182	4063	24.02	6.08	-0.01
277	SLU 59	9	-183	4063	24.03	6.08	-0.01
277	SLU 60	9	-199	4202	24.94	6.33	-0.01
277	SLU 61	9	-199	4202	24.95	6.33	-0.01
277	SLU 62	9	-196	4221	25.08	6.37	-0.01
277	SLU 63	9	-196	4221	25.09	6.37	-0.01
277	SLU 64	9	-188	4033	23.78	6	-0.01
277	SLU 65	9	-188	4033	23.8	6	-0.01
277	SLU 66	9	-189	4091	24.19	6.1	-0.01
277	SLU 67	9	-189	4091	24.21	6.1	-0.01
277	SLU 68	9	-186	4051	23.94	6.03	-0.01
277	SLU 69	9	-186	4110	24.33	6.14	-0.01
277	SLU 70	9	-186	4110	24.35	6.14	-0.01
277	SLU 71	9	-183	4070	24.05	6.07	-0.01
277	SLU 72	9	-183	4070	24.07	6.07	-0.01
277	SLU 73	10	-215	4443	26.6	6.76	-0.01
277	SLU 74	10	-215	4502	26.99	6.87	-0.01
277	SLU 75	10	-215	4502	27.01	6.87	-0.01
277	SLU 76	10	-213	4462	26.74	6.8	-0.01
277	SLU 77	10	-213	4521	27.13	6.91	-0.01
277	SLU 78	10	-213	4520	27.15	6.91	-0.01
277	SLU 79	10	-210	4481	26.85	6.84	-0.01
277	SLU 80	10	-210	4481	26.87	6.84	-0.01
277	SLU 81	10	-226	4620	27.78	7.09	-0.01
277	SLU 82	10	-226	4620	27.79	7.09	-0.01
277	SLU 83	10	-224	4639	27.92	7.13	-0.01
277	SLU 84	10	-224	4638	27.93	7.13	-0.01
277	SLE RA 1	6	-139	3011	17.67	4.44	0
277	SLE RA 2	6	-139	3010	17.68	4.44	0
277	SLE RA 3	7	-139	3049	17.94	4.52	0
277	SLE RA 4	7	-139	3049	17.95	4.52	0
277	SLE RA 5	7	-137	3023	17.77	4.47	0
277	SLE RA 6	7	-137	3062	18.04	4.54	0
277	SLE RA 7	7	-137	3062	18.05	4.54	0
277	SLE RA 8	7	-135	3035	17.85	4.5	0
277	SLE RA 9	7	-136	3035	17.86	4.5	0
277	SLE RA 10	7	-157	3284	19.55	4.96	0
277	SLE RA 11	7	-157	3323	19.81	5.03	0
277	SLE RA 12	7	-157	3323	19.82	5.03	0
277	SLE RA 13	7	-155	3296	19.64	4.98	0
277	SLE RA 14	7	-155	3336	19.9	5.05	0
277	SLE RA 15	7	-155	3335	19.91	5.05	0
277	SLE RA 16	7	-153	3309	19.72	5.01	0
277	SLE RA 17	7	-153	3309	19.73	5.01	0
277	SLE RA 18	8	-164	3402	20.33	5.18	0
277	SLE RA 19	8	-164	3402	20.34	5.18	0
277	SLE RA 20	8	-162	3414	20.43	5.2	0
277	SLE RA 21	8	-163	3414	20.43	5.2	0
277	SLE FR 1	6	-139	3011	17.67	4.44	0
277	SLE FR 2	6	-139	3011	17.67	4.44	0
277	SLE FR 3	6	-138	3016	17.7	4.45	0
277	SLE FR 4	7	-146	3128	18.47	4.66	0
277	SLE FR 5	7	-146	3133	18.5	4.67	0
277	SLE FR 6	7	-151	3206	19	4.81	0
277	SLE QP 1	6	-139	3011	17.67	4.44	0
277	SLE QP 2	7	-146	3128	18.47	4.66	0
277	SLD 1	8	-113	3918	16.9	5.96	-0.01
277	SLD 2	8	-113	3918	16.9	5.96	-0.01
277	SLD 3	11	-462	3557	32.57	8.36	-0.01
277	SLD 4	11	-462	3557	32.57	8.36	-0.01
277	SLD 5	1	393	3913	-5.77	1.41	-0.01
277	SLD 6	1	393	3913	-5.77	1.41	-0.01
277	SLD 7	14	-770	2709	46.46	9.41	0

Nodo	Cont.	Reazione a traslazione			Reazione a rotazione		
Ind.	N.br.	x	y	z	x	y	z
277	SLD 8	14	-770	2709	46.46	9.41	0
277	SLD 9	-1	478	3548	-9.53	-0.09	-0.01
277	SLD 10	-1	478	3548	-9.53	-0.09	-0.01
277	SLD 11	13	-686	2343	42.7	7.92	0
277	SLD 12	13	-686	2343	42.7	7.92	0
277	SLD 13	2	169	2699	4.36	0.97	0
277	SLD 14	2	169	2699	4.36	0.97	0
277	SLD 15	6	-180	2338	20.03	3.37	0
277	SLD 16	6	-180	2338	20.03	3.37	0
277	SLV 1	8	-59	5009	14.37	7.52	-0.02
277	SLV 2	8	-59	5009	14.37	7.52	-0.02
277	SLV 3	18	-884	4149	51.45	13.54	-0.01
277	SLV 4	18	-884	4149	51.45	13.54	-0.01
277	SLV 5	-8	1131	4997	-39.01	-3.61	-0.02
277	SLV 6	-8	1131	4997	-39.01	-3.61	-0.02
277	SLV 7	25	-1618	2129	84.61	16.46	0
277	SLV 8	25	-1618	2129	84.61	16.46	0
277	SLV 9	-12	1326	4127	-47.68	-7.13	-0.01
277	SLV 10	-12	1326	4127	-47.68	-7.13	-0.01
277	SLV 11	21	-1423	1259	75.94	12.94	0.01
277	SLV 12	21	-1423	1259	75.94	12.94	0.01
277	SLV 13	-5	591	2107	-14.52	-4.21	0
277	SLV 14	-5	591	2107	-14.52	-4.21	0
277	SLV 15	5	-233	1247	22.56	1.81	0.01
277	SLV 16	5	-233	1247	22.56	1.81	0.01
278	SLU 1	11	5	2003	1.27	7.19	0
278	SLU 2	11	0	1996	1.5	7.09	0
278	SLU 3	11	3	2045	1.38	7.43	0
278	SLU 4	11	1	2041	1.51	7.37	0
278	SLU 5	11	-1	2019	1.57	7.24	0
278	SLU 6	12	2	2068	1.45	7.58	0
278	SLU 7	12	-1	2064	1.59	7.52	0
278	SLU 8	11	2	2048	1.42	7.48	0
278	SLU 9	11	-1	2044	1.56	7.42	0
278	SLU 10	13	2	2228	1.7	8.18	0
278	SLU 11	13	5	2277	1.57	8.53	0
278	SLU 12	13	2	2273	1.71	8.47	0
278	SLU 13	13	1	2250	1.77	8.33	0
278	SLU 14	13	4	2300	1.65	8.68	0
278	SLU 15	13	1	2296	1.78	8.62	0
278	SLU 16	13	4	2280	1.62	8.58	0
278	SLU 17	13	1	2276	1.75	8.52	0
278	SLU 18	13	8	2334	1.55	8.75	0
278	SLU 19	13	5	2330	1.69	8.69	0
278	SLU 20	14	6	2356	1.63	8.9	0
278	SLU 21	14	3	2352	1.76	8.84	0
278	SLU 22	13	6	2226	1.48	8.29	0
278	SLU 23	13	1	2220	1.7	8.19	0
278	SLU 24	13	4	2269	1.58	8.53	0
278	SLU 25	13	1	2265	1.71	8.47	0
278	SLU 26	13	0	2242	1.77	8.34	0
278	SLU 27	13	3	2292	1.65	8.68	0
278	SLU 28	13	0	2288	1.79	8.62	0
278	SLU 29	13	3	2272	1.62	8.59	0
278	SLU 30	13	0	2268	1.76	8.53	0
278	SLU 31	14	3	2451	1.9	9.29	0
278	SLU 32	15	6	2501	1.77	9.63	0
278	SLU 33	15	3	2497	1.91	9.57	0
278	SLU 34	14	2	2474	1.97	9.44	0
278	SLU 35	15	5	2523	1.85	9.78	0
278	SLU 36	15	2	2519	1.98	9.72	0
278	SLU 37	15	5	2503	1.82	9.68	0
278	SLU 38	15	2	2499	1.95	9.62	0
278	SLU 39	15	9	2557	1.75	9.86	0
278	SLU 40	15	6	2553	1.89	9.8	0
278	SLU 41	15	7	2580	1.83	10	0
278	SLU 42	15	4	2576	1.96	9.95	0
278	SLU 43	14	6	2527	1.59	8.96	0
278	SLU 44	14	2	2520	1.81	8.86	0
278	SLU 45	14	5	2570	1.69	9.21	0
278	SLU 46	14	2	2566	1.83	9.15	0
278	SLU 47	14	0	2543	1.89	9.01	0
278	SLU 48	14	3	2592	1.76	9.36	0
278	SLU 49	14	0	2588	1.9	9.3	0
278	SLU 50	14	3	2572	1.73	9.26	0
278	SLU 51	14	0	2568	1.87	9.2	0
278	SLU 52	15	3	2752	2.01	9.96	0
278	SLU 53	16	6	2801	1.89	10.31	0
278	SLU 54	16	4	2797	2.02	10.25	0
278	SLU 55	15	2	2774	2.08	10.11	0
278	SLU 56	16	5	2824	1.96	10.46	0
278	SLU 57	16	2	2820	2.09	10.4	0
278	SLU 58	16	5	2804	1.93	10.36	0
278	SLU 59	16	2	2800	2.06	10.3	0
278	SLU 60	16	9	2858	1.87	10.53	0
278	SLU 61	16	6	2854	2	10.47	0
278	SLU 62	16	7	2880	1.94	10.68	0
278	SLU 63	16	5	2876	2.08	10.62	0
278	SLU 64	15	7	2751	1.79	10.07	0
278	SLU 65	15	2	2744	2.01	9.97	0
278	SLU 66	16	5	2793	1.89	10.31	0

Nodo	Cont.	Reazione a traslazione			Reazione a rotazione		
Ind.	N.br.	x	y	z	x	y	z
278	SLU 67	16	3	2789	2.03	10.25	0
278	SLU 68	16	1	2767	2.09	10.12	0
278	SLU 69	16	4	2816	1.96	10.46	0
278	SLU 70	16	1	2812	2.1	10.4	0
278	SLU 71	16	4	2796	1.94	10.36	0
278	SLU 72	16	1	2792	2.07	10.3	0
278	SLU 73	17	4	2975	2.21	11.06	0
278	SLU 74	17	7	3025	2.09	11.41	0
278	SLU 75	17	4	3021	2.22	11.35	0
278	SLU 76	17	3	2998	2.28	11.21	0
278	SLU 77	18	6	3047	2.16	11.56	0
278	SLU 78	18	3	3043	2.3	11.5	0
278	SLU 79	17	6	3027	2.13	11.46	0
278	SLU 80	17	3	3023	2.27	11.4	0
278	SLU 81	18	10	3081	2.07	11.63	0
278	SLU 82	18	7	3077	2.2	11.57	0
278	SLU 83	18	8	3104	2.14	11.78	0
278	SLU 84	18	5	3100	2.28	11.72	0
278	SLE RA 1	11	5	2067	1.33	7.5	0
278	SLE RA 2	11	2	2062	1.48	7.43	0
278	SLE RA 3	12	4	2095	1.4	7.66	0
278	SLE RA 4	12	2	2092	1.49	7.63	0
278	SLE RA 5	12	1	2077	1.53	7.53	0
278	SLE RA 6	12	3	2110	1.45	7.76	0
278	SLE RA 7	12	1	2108	1.54	7.72	0
278	SLE RA 8	12	3	2097	1.43	7.7	0
278	SLE RA 9	12	1	2094	1.52	7.66	0
278	SLE RA 10	13	3	2217	1.61	8.17	0
278	SLE RA 11	13	5	2249	1.53	8.4	0
278	SLE RA 12	13	4	2247	1.62	8.36	0
278	SLE RA 13	13	2	2232	1.66	8.27	0
278	SLE RA 14	13	4	2265	1.58	8.5	0
278	SLE RA 15	13	2	2262	1.67	8.46	0
278	SLE RA 16	13	4	2251	1.56	8.43	0
278	SLE RA 17	13	3	2249	1.65	8.39	0
278	SLE RA 18	13	7	2287	1.52	8.55	0
278	SLE RA 19	13	5	2285	1.61	8.51	0
278	SLE RA 20	13	6	2302	1.57	8.65	0
278	SLE RA 21	13	4	2300	1.66	8.61	0
278	SLE FR 1	11	5	2067	1.33	7.5	0
278	SLE FR 2	11	5	2066	1.36	7.49	0
278	SLE FR 3	12	5	2073	1.35	7.54	0
278	SLE FR 4	12	5	2132	1.42	7.8	0
278	SLE FR 5	12	5	2139	1.41	7.85	0
278	SLE FR 6	12	6	2177	1.42	8.02	0
278	SLE QP 1	11	5	2067	1.33	7.5	0
278	SLE QP 2	12	6	2133	1.39	7.81	0
278	SLD 1	10	11	2058	1.27	12.43	0
278	SLD 2	10	11	2058	1.27	12.43	0
278	SLD 3	8	-418	1981	20.62	10.74	0
278	SLD 4	8	-418	1981	20.62	10.74	0
278	SLD 5	14	658	2228	-28	11.76	0
278	SLD 6	14	658	2228	-28	11.76	0
278	SLD 7	8	-772	1970	36.51	6.13	0
278	SLD 8	8	-772	1970	36.51	6.13	0
278	SLD 9	16	783	2296	-33.74	9.5	0
278	SLD 10	16	783	2296	-33.74	9.5	0
278	SLD 11	10	-646	2038	30.78	3.87	0
278	SLD 12	10	-646	2038	30.78	3.87	0
278	SLD 13	16	430	2285	-17.85	4.89	-0.01
278	SLD 14	16	430	2285	-17.85	4.89	-0.01
278	SLD 15	14	1	2208	1.51	3.2	0
278	SLD 16	14	1	2208	1.51	3.2	0
278	SLV 1	7	17	1960	1.1	18.78	0.01
278	SLV 2	7	17	1960	1.1	18.78	0.01
278	SLV 3	2	-994	1762	46.7	14.58	0.01
278	SLV 4	2	-994	1762	46.7	14.58	0.01
278	SLV 5	17	1542	2381	-67.86	17.46	0
278	SLV 6	17	1542	2381	-67.86	17.46	0
278	SLV 7	2	-1827	1722	84.14	3.48	0.01
278	SLV 8	2	-1827	1722	84.14	3.48	0.01
278	SLV 9	21	1838	2544	-81.37	12.14	-0.01
278	SLV 10	21	1838	2544	-81.37	12.14	-0.01
278	SLV 11	7	-1530	1885	70.63	-1.83	0
278	SLV 12	7	-1530	1885	70.63	-1.83	0
278	SLV 13	22	1006	2503	-43.93	1.05	-0.01
278	SLV 14	22	1006	2503	-43.93	1.05	-0.01
278	SLV 15	17	-5	2306	1.67	-3.15	-0.01
278	SLV 16	17	-5	2306	1.67	-3.15	-0.01
279	SLU 1	-7	-65	3051	3.23	-4.39	0
279	SLU 2	-7	-65	3052	3.22	-4.39	0
279	SLU 3	-7	-62	3118	3.15	-4.5	0
279	SLU 4	-7	-62	3118	3.14	-4.5	0
279	SLU 5	-7	-60	3077	3.03	-4.42	0
279	SLU 6	-7	-58	3143	2.95	-4.54	0
279	SLU 7	-7	-57	3143	2.95	-4.53	0
279	SLU 8	-7	-55	3101	2.84	-4.46	0
279	SLU 9	-7	-55	3101	2.83	-4.46	0
279	SLU 10	-8	-84	3496	4.07	-5.24	0
279	SLU 11	-8	-82	3562	4	-5.35	0
279	SLU 12	-8	-82	3563	4	-5.35	0

Nodo	Cont.	Reazione a traslazione			Reazione a rotazione		
Ind.	N.br.	x	y	z	x	y	z
279	SLU 13	-8	-79	3521	3.88	-5.27	0
279	SLU 14	-8	-77	3587	3.81	-5.38	0
279	SLU 15	-8	-77	3588	3.8	-5.38	0
279	SLU 16	-8	-74	3546	3.69	-5.31	0
279	SLU 17	-8	-74	3546	3.69	-5.31	0
279	SLU 18	-9	-92	3686	4.45	-5.6	0
279	SLU 19	-9	-92	3686	4.44	-5.6	0
279	SLU 20	-9	-87	3711	4.25	-5.64	0
279	SLU 21	-9	-87	3711	4.25	-5.64	0
279	SLU 22	-8	-85	3498	4.11	-5.23	0
279	SLU 23	-8	-84	3498	4.1	-5.23	0
279	SLU 24	-8	-82	3564	4.03	-5.34	0
279	SLU 25	-8	-82	3564	4.03	-5.34	0
279	SLU 26	-8	-79	3523	3.91	-5.27	0
279	SLU 27	-8	-77	3589	3.83	-5.38	0
279	SLU 28	-8	-77	3589	3.83	-5.38	0
279	SLU 29	-8	-75	3548	3.72	-5.3	0
279	SLU 30	-8	-75	3548	3.72	-5.3	0
279	SLU 31	-9	-103	3942	4.96	-6.08	0
279	SLU 32	-9	-101	4009	4.88	-6.19	0
279	SLU 33	-9	-101	4009	4.88	-6.19	0
279	SLU 34	-9	-99	3968	4.76	-6.11	0
279	SLU 35	-9	-97	4034	4.69	-6.23	0
279	SLU 36	-9	-96	4034	4.68	-6.23	0
279	SLU 37	-9	-94	3992	4.57	-6.15	0
279	SLU 38	-9	-94	3992	4.57	-6.15	0
279	SLU 39	-10	-112	4133	5.33	-6.44	0
279	SLU 40	-10	-112	4133	5.33	-6.44	0
279	SLU 41	-10	-107	4158	5.14	-6.48	0
279	SLU 42	-10	-107	4158	5.13	-6.48	0
279	SLU 43	-8	-78	3813	3.89	-5.42	0
279	SLU 44	-8	-77	3814	3.89	-5.41	0
279	SLU 45	-8	-75	3880	3.81	-5.53	0
279	SLU 46	-8	-75	3880	3.81	-5.53	0
279	SLU 47	-8	-72	3839	3.69	-5.45	0
279	SLU 48	-8	-70	3905	3.62	-5.56	0
279	SLU 49	-8	-70	3905	3.61	-5.56	0
279	SLU 50	-8	-68	3863	3.5	-5.49	0
279	SLU 51	-8	-68	3864	3.5	-5.49	0
279	SLU 52	-10	-97	4258	4.74	-6.26	0
279	SLU 53	-10	-94	4325	4.67	-6.38	0
279	SLU 54	-10	-94	4325	4.66	-6.38	0
279	SLU 55	-10	-92	4283	4.55	-6.3	0
279	SLU 56	-10	-90	4350	4.47	-6.41	0
279	SLU 57	-10	-89	4350	4.47	-6.41	0
279	SLU 58	-10	-87	4308	4.36	-6.34	0
279	SLU 59	-10	-87	4308	4.35	-6.33	0
279	SLU 60	-10	-105	4449	5.11	-6.63	0
279	SLU 61	-10	-105	4449	5.11	-6.63	0
279	SLU 62	-10	-100	4474	4.92	-6.66	0
279	SLU 63	-10	-100	4474	4.91	-6.66	0
279	SLU 64	-10	-97	4260	4.78	-6.26	0
279	SLU 65	-10	-97	4260	4.77	-6.26	0
279	SLU 66	-10	-95	4326	4.7	-6.37	0
279	SLU 67	-10	-95	4327	4.69	-6.37	0
279	SLU 68	-10	-92	4285	4.58	-6.29	0
279	SLU 69	-10	-90	4352	4.5	-6.41	0
279	SLU 70	-10	-90	4352	4.5	-6.4	0
279	SLU 71	-10	-87	4310	4.39	-6.33	0
279	SLU 72	-10	-87	4310	4.38	-6.33	0
279	SLU 73	-11	-116	4705	5.62	-7.11	0
279	SLU 74	-11	-114	4771	5.55	-7.22	0
279	SLU 75	-11	-114	4771	5.55	-7.22	0
279	SLU 76	-11	-111	4730	5.43	-7.14	0
279	SLU 77	-11	-109	4796	5.35	-7.25	0
279	SLU 78	-11	-109	4796	5.35	-7.25	0
279	SLU 79	-11	-107	4754	5.24	-7.18	0
279	SLU 80	-11	-107	4755	5.24	-7.18	0
279	SLU 81	-11	-125	4895	6	-7.47	0
279	SLU 82	-11	-125	4895	5.99	-7.47	0
279	SLU 83	-11	-120	4920	5.8	-7.51	0
279	SLU 84	-11	-120	4920	5.8	-7.51	0
279	SLE RA 1	-7	-70	3179	3.48	-4.63	0
279	SLE RA 2	-7	-70	3179	3.48	-4.63	0
279	SLE RA 3	-7	-69	3223	3.43	-4.7	0
279	SLE RA 4	-7	-69	3223	3.42	-4.7	0
279	SLE RA 5	-7	-67	3196	3.35	-4.65	0
279	SLE RA 6	-7	-66	3240	3.3	-4.73	0
279	SLE RA 7	-7	-66	3240	3.29	-4.73	0
279	SLE RA 8	-7	-64	3212	3.22	-4.68	0
279	SLE RA 9	-7	-64	3212	3.22	-4.68	0
279	SLE RA 10	-8	-83	3475	4.05	-5.19	0
279	SLE RA 11	-8	-82	3520	4	-5.27	0
279	SLE RA 12	-8	-82	3520	3.99	-5.27	0
279	SLE RA 13	-8	-80	3492	3.92	-5.22	0
279	SLE RA 14	-8	-78	3536	3.87	-5.29	0
279	SLE RA 15	-8	-78	3536	3.86	-5.29	0
279	SLE RA 16	-8	-77	3508	3.79	-5.24	0
279	SLE RA 17	-8	-77	3509	3.79	-5.24	0
279	SLE RA 18	-8	-89	3602	4.29	-5.44	0
279	SLE RA 19	-8	-89	3602	4.29	-5.44	0

Nodo	Cont.	Reazione a traslazione			Reazione a rotazione		
Ind.	N.br.	x	y	z	x	y	z
279	SLE RA 20	-8	-86	3619	4.16	-5.46	0
279	SLE RA 21	-8	-85	3619	4.16	-5.46	0
279	SLE FR 1	-7	-70	3179	3.48	-4.63	0
279	SLE FR 2	-7	-70	3179	3.48	-4.63	0
279	SLE FR 3	-7	-69	3185	3.43	-4.64	0
279	SLE FR 4	-7	-76	3306	3.72	-4.87	0
279	SLE FR 5	-7	-75	3312	3.67	-4.88	0
279	SLE FR 6	-8	-80	3390	3.89	-5.03	0
279	SLE QP 1	-7	-70	3179	3.48	-4.63	0
279	SLE QP 2	-7	-76	3306	3.72	-4.87	0
279	SLD 1	-3	279	2944	-10.98	-1.57	0
279	SLD 2	-3	279	2944	-10.98	-1.57	0
279	SLD 3	-7	-180	2638	8.33	-3.77	0
279	SLD 4	-7	-180	2638	8.33	-3.77	0
279	SLD 5	-1	727	3661	-29.98	-0.55	0.01
279	SLD 6	-1	727	3661	-29.98	-0.55	0.01
279	SLD 7	-12	-804	2642	34.4	-7.87	0
279	SLD 8	-12	-804	2642	34.4	-7.87	0
279	SLD 9	-2	652	3970	-26.95	-1.87	0.01
279	SLD 10	-2	652	3970	-26.95	-1.87	0.01
279	SLD 11	-14	-879	2951	37.43	-9.2	0
279	SLD 12	-14	-879	2951	37.43	-9.2	0
279	SLD 13	-8	28	3973	-0.88	-5.98	0.01
279	SLD 14	-8	28	3973	-0.88	-5.98	0.01
279	SLD 15	-12	-431	3667	18.43	-8.18	0
279	SLD 16	-12	-431	3667	18.43	-8.18	0
279	SLV 1	3	755	2442	-30.76	3.15	0
279	SLV 2	3	755	2442	-30.76	3.15	0
279	SLV 3	-6	-326	1715	14.71	-2.48	-0.01
279	SLV 4	-6	-326	1715	14.71	-2.48	-0.01
279	SLV 5	9	1812	4150	-75.57	6.07	0.01
279	SLV 6	9	1812	4150	-75.57	6.07	0.01
279	SLV 7	-20	-1790	1725	75.97	-12.69	-0.01
279	SLV 8	-20	-1790	1725	75.97	-12.69	-0.01
279	SLV 9	6	1638	4886	-68.52	2.94	0.02
279	SLV 10	6	1638	4886	-68.52	2.94	0.02
279	SLV 11	-24	-1964	2462	83.02	-15.81	-0.01
279	SLV 12	-24	-1964	2462	83.02	-15.81	-0.01
279	SLV 13	-9	174	4897	-7.26	-7.26	0.01
279	SLV 14	-9	174	4897	-7.26	-7.26	0.01
279	SLV 15	-18	-907	4170	38.21	-12.89	0.01
279	SLV 16	-18	-907	4170	38.21	-12.89	0.01
280	SLU 1	10	-558	4866	24.11	6.26	0
280	SLU 2	10	-475	4742	20.51	6.77	0
280	SLU 3	10	-575	5053	24.86	6.52	0
280	SLU 4	10	-525	4979	22.7	6.83	0
280	SLU 5	10	-483	4892	20.93	6.99	0
280	SLU 6	10	-583	5204	25.29	6.74	0
280	SLU 7	10	-533	5129	23.12	7.05	0
280	SLU 8	10	-575	5166	24.96	6.69	0
280	SLU 9	10	-525	5092	22.79	7	0
280	SLU 10	11	-533	5283	23.08	7.47	0
280	SLU 11	11	-633	5595	27.44	7.22	0
280	SLU 12	11	-583	5521	25.28	7.53	0
280	SLU 13	11	-542	5434	23.5	7.68	0
280	SLU 14	11	-641	5745	27.86	7.43	0
280	SLU 15	11	-591	5671	25.7	7.74	0
280	SLU 16	11	-634	5708	27.53	7.38	0
280	SLU 17	11	-584	5633	25.37	7.69	0
280	SLU 18	11	-641	5639	27.79	7.25	0
280	SLU 19	11	-591	5565	25.63	7.56	0
280	SLU 20	11	-650	5790	28.21	7.46	0
280	SLU 21	11	-600	5715	26.05	7.77	0
280	SLU 22	11	-618	5415	26.75	6.97	0
280	SLU 23	11	-534	5291	23.15	7.49	0
280	SLU 24	11	-634	5603	27.5	7.24	0
280	SLU 25	11	-584	5528	25.34	7.55	0
280	SLU 26	11	-543	5441	23.57	7.71	0
280	SLU 27	11	-643	5753	27.92	7.46	0
280	SLU 28	11	-593	5679	25.76	7.77	0
280	SLU 29	11	-635	5716	27.59	7.4	0
280	SLU 30	11	-585	5641	25.43	7.71	0
280	SLU 31	12	-593	5833	25.72	8.19	0
280	SLU 32	12	-692	6144	30.08	7.94	0
280	SLU 33	12	-642	6070	27.91	8.25	0
280	SLU 34	12	-601	5983	26.14	8.4	0
280	SLU 35	13	-701	6295	30.5	8.15	0
280	SLU 36	13	-651	6220	28.33	8.46	0
280	SLU 37	12	-693	6257	30.17	8.1	0
280	SLU 38	12	-643	6183	28	8.41	0
280	SLU 39	12	-701	6189	30.43	7.97	0
280	SLU 40	12	-651	6114	28.26	8.28	0
280	SLU 41	13	-710	6339	30.85	8.18	0
280	SLU 42	13	-660	6265	28.69	8.49	0
280	SLU 43	12	-705	6137	30.44	7.89	0
280	SLU 44	12	-622	6013	26.84	8.4	0
280	SLU 45	13	-722	6325	31.19	8.15	0
280	SLU 46	13	-672	6250	29.03	8.46	0
280	SLU 47	12	-630	6163	27.26	8.62	0
280	SLU 48	13	-730	6475	31.62	8.37	0
280	SLU 49	13	-680	6400	29.45	8.68	0

Nodo	Cont.	Reazione a traslazione			Reazione a rotazione		
Ind.	N.br.	x	y	z	x	y	z
280	SLU 50	13	-722	6437	31.28	8.32	0
280	SLU 51	13	-672	6363	29.12	8.63	0
280	SLU 52	13	-680	6554	29.41	9.1	0
280	SLU 53	14	-780	6866	33.77	8.85	0
280	SLU 54	14	-730	6792	31.61	9.16	0
280	SLU 55	14	-689	6705	29.83	9.31	0
280	SLU 56	14	-788	7017	34.19	9.06	0
280	SLU 57	14	-738	6942	32.03	9.37	0
280	SLU 58	14	-780	6979	33.86	9.01	0
280	SLU 59	14	-730	6905	31.7	9.32	0
280	SLU 60	14	-788	6911	34.12	8.88	0
280	SLU 61	14	-738	6836	31.96	9.19	0
280	SLU 62	14	-797	7061	34.54	9.1	0
280	SLU 63	14	-747	6987	32.38	9.41	0
280	SLU 64	13	-765	6686	33.08	8.6	0
280	SLU 65	13	-681	6562	29.47	9.12	0
280	SLU 66	14	-781	6874	33.83	8.87	0
280	SLU 67	14	-731	6800	31.67	9.18	0
280	SLU 68	14	-690	6713	29.9	9.34	0
280	SLU 69	14	-790	7024	34.25	9.09	0
280	SLU 70	14	-740	6950	32.09	9.4	0
280	SLU 71	14	-782	6987	33.92	9.03	0
280	SLU 72	14	-732	6913	31.76	9.34	0
280	SLU 73	14	-740	7104	32.05	9.82	0
280	SLU 74	15	-839	7416	36.41	9.57	0
280	SLU 75	15	-789	7341	34.24	9.88	0
280	SLU 76	15	-748	7254	32.47	10.03	0
280	SLU 77	15	-848	7566	36.83	9.78	0
280	SLU 78	15	-798	7492	34.66	10.09	0
280	SLU 79	15	-840	7529	36.5	9.73	0
280	SLU 80	15	-790	7454	34.33	10.04	0
280	SLU 81	15	-848	7460	36.76	9.6	0
280	SLU 82	15	-798	7386	34.59	9.91	0
280	SLU 83	15	-856	7610	37.18	9.81	0
280	SLU 84	15	-806	7536	35.01	10.12	0
280	SLE RA 1	10	-575	5023	24.87	6.46	0
280	SLE RA 2	10	-520	4940	22.46	6.81	0
280	SLE RA 3	10	-586	5148	25.37	6.64	0
280	SLE RA 4	10	-553	5098	23.93	6.85	0
280	SLE RA 5	10	-525	5040	22.74	6.95	0
280	SLE RA 6	10	-592	5248	25.65	6.78	0
280	SLE RA 7	10	-559	5198	24.21	6.99	0
280	SLE RA 8	10	-587	5223	25.43	6.75	0
280	SLE RA 9	10	-553	5173	23.99	6.95	0
280	SLE RA 10	11	-558	5301	24.18	7.27	0
280	SLE RA 11	11	-625	5509	27.08	7.1	0
280	SLE RA 12	11	-592	5459	25.64	7.31	0
280	SLE RA 13	11	-564	5401	24.46	7.41	0
280	SLE RA 14	11	-631	5609	27.36	7.25	0
280	SLE RA 15	11	-597	5559	25.92	7.45	0
280	SLE RA 16	11	-625	5584	27.14	7.21	0
280	SLE RA 17	11	-592	5534	25.7	7.42	0
280	SLE RA 18	11	-631	5538	27.32	7.12	0
280	SLE RA 19	11	-597	5489	25.88	7.33	0
280	SLE RA 20	11	-636	5639	27.6	7.27	0
280	SLE RA 21	11	-603	5589	26.16	7.47	0
280	SLE FR 1	10	-575	5023	24.87	6.46	0
280	SLE FR 2	10	-564	5006	24.39	6.53	0
280	SLE FR 3	10	-577	5063	24.98	6.52	0
280	SLE FR 4	10	-581	5161	25.12	6.73	0
280	SLE FR 5	10	-594	5217	25.71	6.72	0
280	SLE FR 6	10	-603	5280	26.09	6.79	0
280	SLE QP 1	10	-575	5023	24.87	6.46	0
280	SLE QP 2	10	-592	5177	25.6	6.66	0
280	SLD 1	16	-482	6149	20.18	24.27	0
280	SLD 2	16	-482	6149	20.18	24.27	0
280	SLD 3	28	-996	6886	42.44	15.37	0.01
280	SLD 4	28	-996	6886	42.44	15.37	0.01
280	SLD 5	-5	221	4352	-9.79	25.44	-0.01
280	SLD 6	-5	221	4352	-9.79	25.44	-0.01
280	SLD 7	33	-1493	6807	64.42	-4.23	0.01
280	SLD 8	33	-1493	6807	64.42	-4.23	0.01
280	SLD 9	-12	309	3548	-13.22	17.55	-0.02
280	SLD 10	-12	309	3548	-13.22	17.55	-0.02
280	SLD 11	26	-1405	6002	61	-12.12	0.01
280	SLD 12	26	-1405	6002	61	-12.12	0.01
280	SLD 13	-7	-188	3469	8.76	-2.05	-0.01
280	SLD 14	-7	-188	3469	8.76	-2.05	-0.01
280	SLD 15	4	-702	4205	31.02	-10.95	-0.01
280	SLD 16	4	-702	4205	31.02	-10.95	-0.01
280	SLV 1	24	-340	7374	13.21	49.6	0
280	SLV 2	24	-340	7374	13.21	49.6	0
280	SLV 3	53	-1538	9104	65.08	26.96	0.02
280	SLV 4	53	-1538	9104	65.08	26.96	0.02
280	SLV 5	-29	1301	3213	-56.78	53.88	-0.03
280	SLV 6	-29	1301	3213	-56.78	53.88	-0.03
280	SLV 7	67	-2692	8978	116.11	-21.59	0.03
280	SLV 8	67	-2692	8978	116.11	-21.59	0.03
280	SLV 9	-46	1509	1376	-64.9	34.91	-0.03
280	SLV 10	-46	1509	1376	-64.9	34.91	-0.03
280	SLV 11	50	-2484	7141	107.98	-40.56	0.02

Nodo	Cont.	Reazione a traslazione			Reazione a rotazione		
Ind.	N.br.	x	y	z	x	y	z
280	SLV 12	50	-2484	7141	107.98	-40.56	0.02
280	SLV 13	-33	354	1251	-13.87	-13.64	-0.03
280	SLV 14	-33	354	1251	-13.87	-13.64	-0.03
280	SLV 15	-4	-844	2980	37.99	-36.28	-0.01
280	SLV 16	-4	-844	2980	37.99	-36.28	-0.01
281	SLU 1	5	-732	4697	30.51	3.59	0
281	SLU 2	4	-624	4580	25.91	2.77	0
281	SLU 3	5	-758	4874	31.6	3.73	0
281	SLU 4	5	-693	4804	28.84	3.24	0
281	SLU 5	5	-641	4720	26.65	2.87	0
281	SLU 6	5	-775	5014	32.34	3.83	0
281	SLU 7	5	-710	4944	29.58	3.34	0
281	SLU 8	5	-766	4977	31.99	3.8	0
281	SLU 9	5	-701	4907	29.23	3.3	0
281	SLU 10	5	-709	5097	29.49	3.28	0
281	SLU 11	6	-843	5391	35.18	4.24	0
281	SLU 12	5	-778	5321	32.42	3.75	0
281	SLU 13	5	-726	5238	30.23	3.38	0
281	SLU 14	6	-860	5532	35.92	4.34	0
281	SLU 15	6	-795	5462	33.16	3.85	0
281	SLU 16	6	-852	5495	35.57	4.31	0
281	SLU 17	6	-787	5425	32.81	3.81	0
281	SLU 18	6	-854	5436	35.63	4.32	0
281	SLU 19	5	-789	5366	32.87	3.83	0
281	SLU 20	6	-871	5576	36.37	4.42	0
281	SLU 21	6	-806	5506	33.61	3.93	0
281	SLU 22	5	-818	5219	34.13	4.09	0
281	SLU 23	5	-710	5102	29.52	3.27	0
281	SLU 24	6	-844	5396	35.22	4.23	0
281	SLU 25	5	-779	5326	32.45	3.74	0
281	SLU 26	5	-727	5242	30.26	3.37	0
281	SLU 27	6	-861	5536	35.96	4.33	0
281	SLU 28	6	-796	5466	33.19	3.84	0
281	SLU 29	6	-852	5499	35.61	4.3	0
281	SLU 30	6	-787	5429	32.84	3.8	0
281	SLU 31	6	-796	5619	33.11	3.78	0
281	SLU 32	6	-930	5913	38.8	4.74	0
281	SLU 33	6	-865	5843	36.04	4.25	0
281	SLU 34	6	-813	5760	33.85	3.88	0
281	SLU 35	6	-947	6054	39.54	4.84	0
281	SLU 36	6	-882	5984	36.78	4.35	0
281	SLU 37	6	-938	6017	39.19	4.81	0
281	SLU 38	6	-873	5947	36.43	4.31	0
281	SLU 39	6	-941	5958	39.24	4.82	0
281	SLU 40	6	-876	5888	36.48	4.32	0
281	SLU 41	7	-958	6098	39.98	4.92	0
281	SLU 42	6	-893	6028	37.22	4.43	0
281	SLU 43	6	-922	5927	38.43	4.5	0
281	SLU 44	6	-814	5810	33.82	3.67	0
281	SLU 45	6	-948	6104	39.51	4.64	0
281	SLU 46	6	-883	6034	36.75	4.14	0
281	SLU 47	6	-831	5950	34.56	3.78	0
281	SLU 48	6	-965	6244	40.25	4.74	0
281	SLU 49	6	-900	6174	37.49	4.25	0
281	SLU 50	6	-956	6207	39.91	4.7	0
281	SLU 51	6	-891	6137	37.14	4.21	0
281	SLU 52	6	-899	6327	37.4	4.18	0
281	SLU 53	7	-1033	6621	43.1	5.15	0
281	SLU 54	7	-968	6551	40.33	4.65	0
281	SLU 55	6	-916	6468	38.14	4.29	0
281	SLU 56	7	-1050	6762	43.84	5.25	0
281	SLU 57	7	-985	6692	41.07	4.76	0
281	SLU 58	7	-1042	6725	43.49	5.21	0
281	SLU 59	7	-977	6655	40.73	4.72	0
281	SLU 60	7	-1044	6666	43.54	5.23	0
281	SLU 61	7	-979	6596	40.78	4.73	0
281	SLU 62	7	-1061	6806	44.28	5.33	0
281	SLU 63	7	-996	6736	41.52	4.84	0
281	SLU 64	7	-1008	6449	42.04	5	0
281	SLU 65	6	-900	6332	37.44	4.17	0
281	SLU 66	7	-1034	6626	43.13	5.14	0
281	SLU 67	7	-969	6556	40.37	4.64	0
281	SLU 68	6	-917	6472	38.18	4.28	0
281	SLU 69	7	-1051	6766	43.87	5.24	0
281	SLU 70	7	-986	6696	41.11	4.75	0
281	SLU 71	7	-1042	6729	43.52	5.2	0
281	SLU 72	7	-977	6659	40.76	4.71	0
281	SLU 73	7	-986	6849	41.02	4.68	0
281	SLU 74	8	-1120	7143	46.71	5.65	0
281	SLU 75	7	-1055	7073	43.95	5.15	0
281	SLU 76	7	-1003	6990	41.76	4.79	0
281	SLU 77	8	-1137	7284	47.45	5.75	0
281	SLU 78	7	-1072	7214	44.69	5.26	0
281	SLU 79	8	-1128	7247	47.1	5.71	0
281	SLU 80	7	-1063	7177	44.34	5.22	0
281	SLU 81	8	-1131	7188	47.16	5.72	0
281	SLU 82	7	-1066	7118	44.4	5.23	0
281	SLU 83	8	-1148	7328	47.9	5.83	0
281	SLU 84	8	-1083	7258	45.14	5.33	0
281	SLE RA 1	5	-757	4846	31.54	3.73	0
281	SLE RA 2	5	-685	4768	28.48	3.18	0

Nodo	Cont.	Reazione a traslazione			Reazione a rotazione		
Ind.	N.br.	x	y	z	x	y	z
281	SLE RA 3	5	-774	4964	32.27	3.83	0
281	SLE RA 4	5	-730	4917	30.43	3.5	0
281	SLE RA 5	5	-696	4861	28.97	3.25	0
281	SLE RA 6	5	-785	5058	32.76	3.9	0
281	SLE RA 7	5	-742	5011	30.92	3.57	0
281	SLE RA 8	5	-779	5033	32.53	3.87	0
281	SLE RA 9	5	-736	4986	30.69	3.54	0
281	SLE RA 10	5	-742	5113	30.86	3.52	0
281	SLE RA 11	6	-831	5309	34.66	4.17	0
281	SLE RA 12	5	-788	5262	32.82	3.84	0
281	SLE RA 13	5	-753	5206	31.36	3.59	0
281	SLE RA 14	6	-842	5402	35.15	4.24	0
281	SLE RA 15	5	-799	5356	33.31	3.91	0
281	SLE RA 16	6	-837	5378	34.92	4.21	0
281	SLE RA 17	5	-793	5331	33.08	3.88	0
281	SLE RA 18	6	-838	5339	34.96	4.22	0
281	SLE RA 19	5	-795	5292	33.11	3.89	0
281	SLE RA 20	6	-850	5432	35.45	4.29	0
281	SLE RA 21	6	-806	5385	33.61	3.96	0
281	SLE FR 1	5	-757	4846	31.54	3.73	0
281	SLE FR 2	5	-742	4830	30.93	3.62	0
281	SLE FR 3	5	-761	4883	31.74	3.76	0
281	SLE FR 4	5	-767	4978	31.95	3.77	0
281	SLE FR 5	5	-786	5031	32.77	3.91	0
281	SLE FR 6	5	-798	5092	33.25	3.98	0
281	SLE QP 1	5	-757	4846	31.54	3.73	0
281	SLE QP 2	5	-781	4994	32.57	3.88	0
281	SLD 1	8	-343	3203	13.5	11.35	0.01
281	SLD 2	8	-343	3203	13.5	11.35	0.01
281	SLD 3	19	-923	3898	38.66	19.31	0
281	SLD 4	19	-923	3898	38.66	19.31	0
281	SLD 5	-10	230	3403	-11.31	-5.95	0.02
281	SLD 6	-10	230	3403	-11.31	-5.95	0.02
281	SLD 7	26	-1704	5719	72.55	20.58	-0.01
281	SLD 8	26	-1704	5719	72.55	20.58	-0.01
281	SLD 9	-16	141	4268	-7.42	-12.82	0.01
281	SLD 10	-16	141	4268	-7.42	-12.82	0.01
281	SLD 11	21	-1793	6585	76.44	13.71	-0.02
281	SLD 12	21	-1793	6585	76.44	13.71	-0.02
281	SLD 13	-9	-639	6089	26.48	-11.55	0
281	SLD 14	-9	-639	6089	26.48	-11.55	0
281	SLD 15	2	-1220	6784	51.63	-3.59	-0.01
281	SLD 16	2	-1220	6784	51.63	-3.59	-0.01
281	SLV 1	12	244	891	-11.93	21.36	0.02
281	SLV 2	12	244	891	-11.93	21.36	0.02
281	SLV 3	40	-1109	2524	46.71	41.62	0
281	SLV 4	40	-1109	2524	46.71	41.62	0
281	SLV 5	-35	1577	1287	-69.71	-21.61	0.04
281	SLV 6	-35	1577	1287	-69.71	-21.61	0.04
281	SLV 7	58	-2931	6729	125.74	45.94	-0.03
281	SLV 8	58	-2931	6729	125.74	45.94	-0.03
281	SLV 9	-48	1368	3258	-60.6	-38.18	0.03
281	SLV 10	-48	1368	3258	-60.6	-38.18	0.03
281	SLV 11	45	-3140	8701	134.84	29.37	-0.04
281	SLV 12	45	-3140	8701	134.84	29.37	-0.04
281	SLV 13	-30	-454	7463	18.43	-33.87	0
281	SLV 14	-30	-454	7463	18.43	-33.87	0
281	SLV 15	-2	-1806	9096	77.06	-13.6	-0.02
281	SLV 16	-2	-1806	9096	77.06	-13.6	-0.02
282	SLU 1	10	-76	2922	3.71	8.14	0.04
282	SLU 2	10	-83	2915	3.98	8.06	0.04
282	SLU 3	11	-84	3005	4.01	8.4	0.05
282	SLU 4	11	-88	3001	4.17	8.35	0.05
282	SLU 5	11	-91	2969	4.26	8.22	0.04
282	SLU 6	11	-91	3058	4.29	8.56	0.05
282	SLU 7	11	-96	3054	4.45	8.51	0.05
282	SLU 8	11	-91	3028	4.27	8.45	0.05
282	SLU 9	11	-96	3024	4.43	8.41	0.05
282	SLU 10	12	-89	3275	4.4	9.28	0.05
282	SLU 11	12	-90	3364	4.43	9.62	0.05
282	SLU 12	12	-95	3360	4.59	9.57	0.05
282	SLU 13	12	-97	3328	4.68	9.44	0.05
282	SLU 14	13	-98	3417	4.71	9.77	0.05
282	SLU 15	13	-102	3413	4.87	9.73	0.05
282	SLU 16	12	-98	3388	4.69	9.67	0.05
282	SLU 17	12	-102	3384	4.85	9.62	0.05
282	SLU 18	13	-85	3436	4.31	9.87	0.05
282	SLU 19	13	-90	3432	4.47	9.83	0.05
282	SLU 20	13	-93	3489	4.59	10.03	0.05
282	SLU 21	13	-97	3485	4.75	9.99	0.05
282	SLU 22	12	-86	3275	4.22	9.33	0.05
282	SLU 23	12	-93	3268	4.49	9.25	0.05
282	SLU 24	12	-94	3358	4.52	9.59	0.05
282	SLU 25	12	-98	3354	4.68	9.54	0.05
282	SLU 26	12	-100	3321	4.77	9.41	0.05
282	SLU 27	13	-101	3411	4.8	9.75	0.05
282	SLU 28	13	-106	3407	4.96	9.7	0.05
282	SLU 29	12	-101	3381	4.78	9.64	0.05
282	SLU 30	12	-105	3377	4.95	9.6	0.05
282	SLU 31	13	-99	3628	4.91	10.47	0.06
282	SLU 32	14	-100	3717	4.94	10.81	0.06

Nodo	Cont.	Reazione a traslazione			Reazione a rotazione		
Ind.	N.br.	x	y	z	x	y	z
282	SLU 33	14	-104	3713	5.11	10.76	0.06
282	SLU 34	14	-107	3681	5.2	10.63	0.06
282	SLU 35	14	-108	3770	5.22	10.96	0.06
282	SLU 36	14	-112	3766	5.39	10.92	0.06
282	SLU 37	14	-108	3741	5.21	10.86	0.06
282	SLU 38	14	-112	3737	5.37	10.81	0.06
282	SLU 39	14	-95	3789	4.83	11.06	0.06
282	SLU 40	14	-99	3785	4.99	11.02	0.06
282	SLU 41	14	-103	3842	5.11	11.22	0.06
282	SLU 42	14	-107	3838	5.27	11.18	0.06
282	SLU 43	13	-95	3678	4.65	10.17	0.06
282	SLU 44	13	-102	3671	4.92	10.1	0.05
282	SLU 45	13	-103	3760	4.95	10.43	0.06
282	SLU 46	13	-107	3756	5.11	10.39	0.06
282	SLU 47	13	-110	3724	5.2	10.25	0.06
282	SLU 48	14	-111	3813	5.23	10.59	0.06
282	SLU 49	14	-115	3809	5.39	10.55	0.06
282	SLU 50	14	-111	3784	5.21	10.49	0.06
282	SLU 51	13	-115	3780	5.37	10.44	0.06
282	SLU 52	15	-109	4031	5.34	11.31	0.06
282	SLU 53	15	-110	4120	5.37	11.65	0.06
282	SLU 54	15	-114	4116	5.53	11.6	0.06
282	SLU 55	15	-117	4084	5.62	11.47	0.06
282	SLU 56	15	-118	4173	5.65	11.81	0.06
282	SLU 57	15	-122	4169	5.81	11.76	0.06
282	SLU 58	15	-117	4143	5.63	11.7	0.06
282	SLU 59	15	-122	4139	5.79	11.66	0.06
282	SLU 60	15	-105	4191	5.25	11.91	0.06
282	SLU 61	15	-109	4187	5.41	11.86	0.06
282	SLU 62	16	-112	4244	5.53	12.07	0.07
282	SLU 63	15	-117	4240	5.69	12.02	0.07
282	SLU 64	15	-105	4031	5.16	11.36	0.06
282	SLU 65	15	-112	4024	5.43	11.28	0.06
282	SLU 66	15	-113	4113	5.46	11.62	0.06
282	SLU 67	15	-117	4109	5.62	11.58	0.06
282	SLU 68	15	-120	4077	5.71	11.44	0.06
282	SLU 69	15	-121	4166	5.74	11.78	0.06
282	SLU 70	15	-125	4162	5.9	11.74	0.06
282	SLU 71	15	-121	4137	5.72	11.68	0.06
282	SLU 72	15	-125	4133	5.88	11.63	0.06
282	SLU 73	16	-119	4384	5.85	12.5	0.07
282	SLU 74	17	-120	4473	5.88	12.84	0.07
282	SLU 75	16	-124	4469	6.04	12.79	0.07
282	SLU 76	16	-126	4437	6.13	12.66	0.07
282	SLU 77	17	-127	4526	6.16	13	0.07
282	SLU 78	17	-132	4522	6.32	12.95	0.07
282	SLU 79	17	-127	4496	6.14	12.89	0.07
282	SLU 80	17	-131	4492	6.3	12.85	0.07
282	SLU 81	17	-114	4544	5.76	13.1	0.07
282	SLU 82	17	-119	4540	5.92	13.05	0.07
282	SLU 83	17	-122	4597	6.04	13.26	0.07
282	SLU 84	17	-126	4593	6.2	13.21	0.07
282	SLE RA 1	11	-79	3023	3.86	8.48	0.05
282	SLE RA 2	11	-83	3019	4.04	8.43	0.05
282	SLE RA 3	11	-84	3078	4.06	8.65	0.05
282	SLE RA 4	11	-87	3075	4.16	8.62	0.05
282	SLE RA 5	11	-88	3054	4.22	8.53	0.05
282	SLE RA 6	11	-89	3113	4.24	8.76	0.05
282	SLE RA 7	11	-92	3111	4.35	8.73	0.05
282	SLE RA 8	11	-89	3094	4.23	8.69	0.05
282	SLE RA 9	11	-92	3091	4.34	8.66	0.05
282	SLE RA 10	12	-88	3258	4.32	9.24	0.05
282	SLE RA 11	12	-88	3318	4.34	9.46	0.05
282	SLE RA 12	12	-91	3315	4.45	9.43	0.05
282	SLE RA 13	12	-93	3294	4.5	9.34	0.05
282	SLE RA 14	12	-93	3353	4.52	9.57	0.05
282	SLE RA 15	12	-96	3350	4.63	9.54	0.05
282	SLE RA 16	12	-93	3333	4.51	9.5	0.05
282	SLE RA 17	12	-96	3331	4.62	9.47	0.05
282	SLE RA 18	12	-85	3365	4.26	9.64	0.05
282	SLE RA 19	12	-88	3363	4.37	9.61	0.05
282	SLE RA 20	13	-90	3401	4.44	9.74	0.05
282	SLE RA 21	13	-93	3398	4.55	9.71	0.05
282	SLE FR 1	11	-79	3023	3.86	8.48	0.05
282	SLE FR 2	11	-80	3022	3.89	8.47	0.05
282	SLE FR 3	11	-81	3037	3.93	8.52	0.05
282	SLE FR 4	11	-81	3125	4.01	8.82	0.05
282	SLE FR 5	11	-83	3140	4.05	8.87	0.05
282	SLE FR 6	12	-82	3194	4.06	9.06	0.05
282	SLE QP 1	11	-79	3023	3.86	8.48	0.05
282	SLE QP 2	11	-81	3126	3.98	8.83	0.05
282	SLD 1	17	-15	3075	1.77	14.76	0.07
282	SLD 2	17	-15	3075	1.77	14.76	0.07
282	SLD 3	16	-531	3430	19.32	13.39	0.06
282	SLD 4	16	-531	3430	19.32	13.39	0.06
282	SLD 5	16	722	2571	-23.29	12.68	0.06
282	SLD 6	16	722	2571	-23.29	12.68	0.06
282	SLD 7	10	-999	3756	35.18	8.12	0.04
282	SLD 8	10	-999	3756	35.18	8.12	0.04
282	SLD 9	13	837	2495	-27.23	9.53	0.05
282	SLD 10	13	837	2495	-27.23	9.53	0.05

Nodo	Cont.	Reazione a traslazione			Reazione a rotazione		
Ind.	N.br.	x	y	z	x	y	z
282	SLD 11	7	-883	3680	31.24	4.97	0.03
282	SLD 12	7	-883	3680	31.24	4.97	0.03
282	SLD 13	7	370	2821	-11.36	4.26	0.03
282	SLD 14	7	370	2821	-11.36	4.26	0.03
282	SLD 15	5	-146	3176	6.18	2.89	0.03
282	SLD 16	5	-146	3176	6.18	2.89	0.03
282	SLV 1	26	71	3010	-1.11	23.26	0.1
282	SLV 2	26	71	3010	-1.11	23.26	0.1
282	SLV 3	22	-1149	3849	40.31	19.91	0.09
282	SLV 4	22	-1149	3849	40.31	19.91	0.09
282	SLV 5	22	1814	1818	-60.38	18.24	0.08
282	SLV 6	22	1814	1818	-60.38	18.24	0.08
282	SLV 7	8	-2250	4615	77.71	7.06	0.04
282	SLV 8	8	-2250	4615	77.71	7.06	0.04
282	SLV 9	14	2089	1636	-69.75	10.59	0.06
282	SLV 10	14	2089	1636	-69.75	10.59	0.06
282	SLV 11	1	-1975	4433	68.33	-0.59	0.01
282	SLV 12	1	-1975	4433	68.33	-0.59	0.01
282	SLV 13	1	987	2402	-32.36	-2.26	0.01
282	SLV 14	1	987	2402	-32.36	-2.26	0.01
282	SLV 15	-3	-232	3242	9.06	-5.61	0
282	SLV 16	-3	-232	3242	9.06	-5.61	0
283	SLU 1	6	38	2240	-0.7	4.83	0
283	SLU 2	6	33	2237	-0.47	4.77	0
283	SLU 3	6	37	2287	-0.65	5	0
283	SLU 4	6	34	2286	-0.52	4.96	0
283	SLU 5	6	32	2261	-0.43	4.87	0
283	SLU 6	7	36	2311	-0.61	5.1	0
283	SLU 7	7	34	2309	-0.47	5.07	0
283	SLU 8	7	36	2287	-0.61	5.04	0
283	SLU 9	6	33	2286	-0.47	5	0
283	SLU 10	7	43	2511	-0.73	5.51	0
283	SLU 11	7	47	2561	-0.91	5.74	0
283	SLU 12	7	44	2560	-0.78	5.7	0
283	SLU 13	7	42	2535	-0.69	5.61	0
283	SLU 14	8	46	2585	-0.87	5.84	0
283	SLU 15	8	43	2583	-0.73	5.8	0
283	SLU 16	7	46	2561	-0.87	5.78	0
283	SLU 17	7	43	2560	-0.73	5.74	0
283	SLU 18	8	52	2632	-1.07	5.89	0
283	SLU 19	8	49	2630	-0.94	5.85	0
283	SLU 20	8	51	2655	-1.03	5.99	0
283	SLU 21	8	48	2653	-0.89	5.95	0
283	SLU 22	7	46	2501	-0.9	5.58	0
283	SLU 23	7	41	2498	-0.67	5.51	0
283	SLU 24	7	46	2548	-0.85	5.75	0
283	SLU 25	7	43	2547	-0.72	5.71	0
283	SLU 26	7	40	2522	-0.63	5.62	0
283	SLU 27	8	45	2572	-0.81	5.85	0
283	SLU 28	8	42	2570	-0.67	5.81	0
283	SLU 29	7	44	2548	-0.81	5.78	0
283	SLU 30	7	41	2547	-0.67	5.75	0
283	SLU 31	8	51	2772	-0.93	6.25	0
283	SLU 32	8	55	2822	-1.11	6.49	0
283	SLU 33	8	53	2821	-0.98	6.45	0
283	SLU 34	8	50	2796	-0.89	6.36	0
283	SLU 35	9	54	2846	-1.07	6.59	0
283	SLU 36	9	52	2844	-0.93	6.55	0
283	SLU 37	8	54	2822	-1.07	6.52	0
283	SLU 38	8	51	2821	-0.93	6.48	0
283	SLU 39	9	60	2893	-1.27	6.63	0
283	SLU 40	9	57	2891	-1.14	6.59	0
283	SLU 41	9	59	2916	-1.23	6.74	0
283	SLU 42	9	56	2914	-1.09	6.7	0
283	SLU 43	8	47	2823	-0.84	6.03	0
283	SLU 44	8	42	2820	-0.62	5.96	0
283	SLU 45	8	46	2870	-0.8	6.2	0
283	SLU 46	8	43	2868	-0.66	6.16	0
283	SLU 47	8	41	2844	-0.57	6.06	0
283	SLU 48	8	45	2894	-0.75	6.3	0
283	SLU 49	8	42	2892	-0.61	6.26	0
283	SLU 50	8	45	2870	-0.75	6.23	0
283	SLU 51	8	42	2868	-0.61	6.19	0
283	SLU 52	9	52	3094	-0.88	6.7	0
283	SLU 53	9	56	3144	-1.06	6.93	0
283	SLU 54	9	53	3142	-0.92	6.9	0
283	SLU 55	9	51	3117	-0.83	6.8	0
283	SLU 56	9	55	3168	-1.01	7.04	0
283	SLU 57	9	52	3166	-0.87	7	0
283	SLU 58	9	55	3144	-1.01	6.97	0
283	SLU 59	9	52	3142	-0.87	6.93	0
283	SLU 60	9	61	3214	-1.22	7.08	0
283	SLU 61	9	58	3212	-1.08	7.04	0
283	SLU 62	9	60	3238	-1.17	7.19	0
283	SLU 63	9	57	3236	-1.03	7.15	0
283	SLU 64	9	55	3084	-1.04	6.77	0
283	SLU 65	9	50	3081	-0.82	6.71	0
283	SLU 66	9	54	3131	-1	6.94	0
283	SLU 67	9	51	3129	-0.86	6.9	0
283	SLU 68	9	49	3104	-0.77	6.81	0
283	SLU 69	9	53	3155	-0.95	7.04	0

Nodo	Cont.	Reazione a traslazione			Reazione a rotazione		
Ind.	N.br.	x	y	z	x	y	z
283	SLU 70	9	50	3153	-0.81	7.01	0
283	SLU 71	9	53	3131	-0.95	6.98	0
283	SLU 72	9	50	3129	-0.81	6.94	0
283	SLU 73	10	60	3355	-1.08	7.45	0
283	SLU 74	10	64	3405	-1.26	7.68	0
283	SLU 75	10	61	3403	-1.12	7.64	0
283	SLU 76	10	59	3378	-1.03	7.55	0
283	SLU 77	10	63	3429	-1.21	7.78	0
283	SLU 78	10	60	3427	-1.07	7.74	0
283	SLU 79	10	63	3405	-1.21	7.72	0
283	SLU 80	10	60	3403	-1.07	7.68	0
283	SLU 81	10	69	3475	-1.42	7.83	0
283	SLU 82	10	66	3473	-1.28	7.79	0
283	SLU 83	10	68	3499	-1.37	7.93	0
283	SLU 84	10	65	3497	-1.23	7.89	0
283	SLE RA 1	7	40	2315	-0.76	5.04	0
283	SLE RA 2	7	37	2313	-0.61	5	0
283	SLE RA 3	7	40	2346	-0.73	5.16	0
283	SLE RA 4	7	38	2345	-0.64	5.13	0
283	SLE RA 5	7	36	2329	-0.58	5.07	0
283	SLE RA 6	7	39	2362	-0.7	5.23	0
283	SLE RA 7	7	37	2361	-0.6	5.2	0
283	SLE RA 8	7	39	2346	-0.7	5.18	0
283	SLE RA 9	7	37	2345	-0.61	5.16	0
283	SLE RA 10	7	44	2495	-0.78	5.49	0
283	SLE RA 11	7	47	2529	-0.9	5.65	0
283	SLE RA 12	7	45	2528	-0.81	5.62	0
283	SLE RA 13	7	43	2511	-0.75	5.56	0
283	SLE RA 14	7	46	2545	-0.87	5.72	0
283	SLE RA 15	7	44	2543	-0.78	5.69	0
283	SLE RA 16	7	46	2529	-0.87	5.68	0
283	SLE RA 17	7	44	2528	-0.78	5.65	0
283	SLE RA 18	7	50	2576	-1.01	5.75	0
283	SLE RA 19	7	48	2574	-0.92	5.72	0
283	SLE RA 20	8	49	2591	-0.98	5.82	0
283	SLE RA 21	8	47	2590	-0.88	5.79	0
283	SLE FR 1	7	40	2315	-0.76	5.04	0
283	SLE FR 2	7	40	2314	-0.73	5.04	0
283	SLE FR 3	7	40	2321	-0.75	5.07	0
283	SLE FR 4	7	43	2393	-0.8	5.25	0
283	SLE FR 5	7	43	2399	-0.82	5.28	0
283	SLE FR 6	7	45	2445	-0.88	5.4	0
283	SLE QP 1	7	40	2315	-0.76	5.04	0
283	SLE QP 2	7	43	2393	-0.83	5.26	0
283	SLD 1	6	44	2212	-0.91	3.48	0.01
283	SLD 2	6	44	2212	-0.91	3.48	0.01
283	SLD 3	5	-375	2350	17.77	2.22	0.01
283	SLD 4	5	-375	2350	17.77	2.22	0.01
283	SLD 5	9	680	2130	-29.18	6.64	0
283	SLD 6	9	680	2130	-29.18	6.64	0
283	SLD 7	4	-719	2589	33.08	2.43	0.01
283	SLD 8	4	-719	2589	33.08	2.43	0.01
283	SLD 9	10	805	2197	-34.75	8.08	0
283	SLD 10	10	805	2197	-34.75	8.08	0
283	SLD 11	4	-593	2656	27.52	3.88	0.01
283	SLD 12	4	-593	2656	27.52	3.88	0.01
283	SLD 13	9	462	2436	-19.44	8.29	0
283	SLD 14	9	462	2436	-19.44	8.29	0
283	SLD 15	7	42	2574	-0.76	7.03	0
283	SLD 16	7	42	2574	-0.76	7.03	0
283	SLV 1	6	45	1959	-0.99	1.16	0.01
283	SLV 2	6	45	1959	-0.99	1.16	0.01
283	SLV 3	2	-943	2293	43.02	-1.96	0.02
283	SLV 4	2	-943	2293	43.02	-1.96	0.02
283	SLV 5	13	1543	1756	-67.63	8.77	0
283	SLV 6	13	1543	1756	-67.63	8.77	0
283	SLV 7	-1	-1752	2870	79.07	-1.65	0.02
283	SLV 8	-1	-1752	2870	79.07	-1.65	0.02
283	SLV 9	15	1838	1916	-80.74	12.16	-0.01
283	SLV 10	15	1838	1916	-80.74	12.16	-0.01
283	SLV 11	1	-1456	3031	65.96	1.74	0.01
283	SLV 12	1	-1456	3031	65.96	1.74	0.01
283	SLV 13	12	1030	2493	-44.69	12.47	-0.01
283	SLV 14	12	1030	2493	-44.69	12.47	-0.01
283	SLV 15	8	41	2828	-0.68	9.35	-0.01
283	SLV 16	8	41	2828	-0.68	9.35	-0.01
284	SLU 1	7	65	2957	-14.81	4.7	0
284	SLU 2	7	65	2957	-14.81	4.7	0
284	SLU 3	8	71	3022	-15.46	4.82	0
284	SLU 4	8	71	3022	-15.46	4.82	0
284	SLU 5	7	71	2984	-15.28	4.74	0
284	SLU 6	8	78	3049	-15.93	4.86	0
284	SLU 7	8	78	3049	-15.93	4.86	0
284	SLU 8	7	78	3012	-15.75	4.79	0
284	SLU 9	7	78	3012	-15.75	4.79	0
284	SLU 10	9	72	3369	-16.93	5.53	0
284	SLU 11	9	78	3435	-17.59	5.66	0
284	SLU 12	9	78	3435	-17.58	5.66	0
284	SLU 13	9	78	3397	-17.4	5.58	0
284	SLU 14	9	85	3462	-18.06	5.7	0
284	SLU 15	9	84	3462	-18.05	5.7	0

Nodo	Cont.	Reazione a traslazione			Reazione a rotazione		
Ind.	N.br.	x	y	z	x	y	z
284	SLU 16	9	85	3424	-17.88	5.62	0
284	SLU 17	9	85	3424	-17.87	5.62	0
284	SLU 18	9	75	3546	-17.85	5.89	0
284	SLU 19	9	74	3546	-17.84	5.89	0
284	SLU 20	9	81	3574	-18.32	5.94	0
284	SLU 21	9	81	3574	-18.31	5.94	0
284	SLU 22	9	70	3370	-16.91	5.54	0
284	SLU 23	9	70	3370	-16.9	5.54	0
284	SLU 24	9	76	3436	-17.56	5.66	0
284	SLU 25	9	76	3436	-17.55	5.66	0
284	SLU 26	9	76	3398	-17.37	5.58	0
284	SLU 27	9	83	3463	-18.03	5.7	0
284	SLU 28	9	83	3463	-18.02	5.7	0
284	SLU 29	9	83	3425	-17.85	5.63	0
284	SLU 30	9	83	3425	-17.84	5.63	0
284	SLU 31	10	76	3783	-19.02	6.38	0
284	SLU 32	10	83	3848	-19.68	6.5	0
284	SLU 33	10	83	3848	-19.68	6.5	0
284	SLU 34	10	83	3810	-19.49	6.42	0
284	SLU 35	10	89	3876	-20.15	6.54	0
284	SLU 36	10	89	3876	-20.15	6.54	0
284	SLU 37	10	90	3838	-19.97	6.46	0
284	SLU 38	10	89	3838	-19.97	6.46	0
284	SLU 39	10	80	3960	-19.94	6.73	0
284	SLU 40	10	79	3960	-19.94	6.73	0
284	SLU 41	10	86	3987	-20.41	6.78	0
284	SLU 42	10	86	3987	-20.41	6.78	0
284	SLU 43	9	83	3702	-18.54	5.82	0
284	SLU 44	9	83	3702	-18.53	5.82	0
284	SLU 45	9	89	3767	-19.19	5.94	0
284	SLU 46	9	89	3767	-19.19	5.94	0
284	SLU 47	9	89	3729	-19	5.86	0
284	SLU 48	9	96	3795	-19.66	5.99	0
284	SLU 49	9	96	3795	-19.66	5.99	0
284	SLU 50	9	96	3757	-19.48	5.91	0
284	SLU 51	9	96	3757	-19.48	5.91	0
284	SLU 52	10	89	4114	-20.66	6.66	0
284	SLU 53	11	96	4180	-21.31	6.78	0
284	SLU 54	11	96	4180	-21.31	6.78	0
284	SLU 55	10	96	4142	-21.13	6.7	0
284	SLU 56	11	102	4207	-21.78	6.82	0
284	SLU 57	11	102	4207	-21.78	6.82	0
284	SLU 58	10	103	4169	-21.6	6.74	0
284	SLU 59	10	102	4169	-21.6	6.74	0
284	SLU 60	11	92	4291	-21.57	7.02	0
284	SLU 61	11	92	4291	-21.57	7.02	0
284	SLU 62	11	99	4319	-22.04	7.06	0
284	SLU 63	11	99	4319	-22.04	7.06	0
284	SLU 64	10	88	4115	-20.63	6.66	0
284	SLU 65	10	88	4115	-20.63	6.66	0
284	SLU 66	11	94	4181	-21.28	6.78	0
284	SLU 67	11	94	4181	-21.28	6.78	0
284	SLU 68	10	94	4143	-21.1	6.7	0
284	SLU 69	11	101	4208	-21.75	6.83	0
284	SLU 70	11	101	4208	-21.75	6.83	0
284	SLU 71	10	101	4170	-21.57	6.75	0
284	SLU 72	10	101	4170	-21.57	6.75	0
284	SLU 73	12	94	4528	-22.75	7.5	0
284	SLU 74	12	101	4593	-23.41	7.62	0
284	SLU 75	12	101	4593	-23.4	7.62	0
284	SLU 76	12	101	4556	-23.22	7.54	0
284	SLU 77	12	107	4621	-23.88	7.66	0
284	SLU 78	12	107	4621	-23.87	7.66	0
284	SLU 79	12	107	4583	-23.7	7.58	0
284	SLU 80	12	107	4583	-23.69	7.58	0
284	SLU 81	12	97	4705	-23.67	7.86	0
284	SLU 82	12	97	4705	-23.66	7.86	0
284	SLU 83	12	104	4732	-24.14	7.9	0
284	SLU 84	12	104	4732	-24.13	7.9	0
284	SLE RA 1	8	66	3075	-15.41	4.94	0
284	SLE RA 2	8	66	3075	-15.41	4.94	0
284	SLE RA 3	8	71	3118	-15.84	5.02	0
284	SLE RA 4	8	71	3118	-15.84	5.02	0
284	SLE RA 5	8	71	3093	-15.72	4.97	0
284	SLE RA 6	8	75	3137	-16.16	5.05	0
284	SLE RA 7	8	75	3137	-16.16	5.05	0
284	SLE RA 8	8	75	3111	-16.04	5	0
284	SLE RA 9	8	75	3111	-16.04	5	0
284	SLE RA 10	9	71	3350	-16.82	5.5	0
284	SLE RA 11	9	75	3393	-17.26	5.58	0
284	SLE RA 12	9	75	3393	-17.26	5.58	0
284	SLE RA 13	9	75	3368	-17.14	5.53	0
284	SLE RA 14	9	79	3412	-17.57	5.61	0
284	SLE RA 15	9	79	3412	-17.57	5.61	0
284	SLE RA 16	9	80	3386	-17.45	5.55	0
284	SLE RA 17	9	79	3387	-17.45	5.55	0
284	SLE RA 18	9	73	3468	-17.43	5.74	0
284	SLE RA 19	9	73	3468	-17.43	5.74	0
284	SLE RA 20	9	77	3486	-17.75	5.76	0
284	SLE RA 21	9	77	3486	-17.74	5.76	0
284	SLE FR 1	8	66	3075	-15.41	4.94	0

Nodo	Cont.	Reazione a traslazione			Reazione a rotazione		
Ind.	N.br.	x	y	z	x	y	z
284	SLE FR 2	8	66	3075	-15.41	4.94	0
284	SLE FR 3	8	68	3082	-15.54	4.95	0
284	SLE FR 4	8	68	3193	-16.02	5.18	0
284	SLE FR 5	8	70	3200	-16.14	5.19	0
284	SLE FR 6	8	70	3271	-16.42	5.34	0
284	SLE QP 1	8	66	3075	-15.41	4.94	0
284	SLE QP 2	8	68	3193	-16.02	5.18	0
284	SLD 1	11	117	3729	-18.33	7.22	0
284	SLD 2	11	117	3729	-18.33	7.22	0
284	SLD 3	13	-232	3547	-3.82	9.14	0
284	SLD 4	13	-232	3547	-3.82	9.14	0
284	SLD 5	5	613	3629	-38.71	2.87	0
284	SLD 6	5	613	3629	-38.71	2.87	0
284	SLD 7	13	-552	3023	9.64	9.28	0
284	SLD 8	13	-552	3023	9.64	9.28	0
284	SLD 9	3	689	3362	-41.68	1.08	0
284	SLD 10	3	689	3362	-41.68	1.08	0
284	SLD 11	11	-477	2756	6.68	7.48	0
284	SLD 12	11	-477	2756	6.68	7.48	0
284	SLD 13	3	369	2839	-28.21	1.22	0
284	SLD 14	3	369	2839	-28.21	1.22	0
284	SLD 15	5	19	2657	-13.71	3.14	0
284	SLD 16	5	19	2657	-13.71	3.14	0
284	SLV 1	14	191	4468	-21.7	9.81	0
284	SLV 2	14	191	4468	-21.7	9.81	0
284	SLV 3	20	-634	4036	12.52	14.64	0
284	SLV 4	20	-634	4036	12.52	14.64	0
284	SLV 5	0	1356	4230	-69.62	-0.75	-0.01
284	SLV 6	0	1356	4230	-69.62	-0.75	-0.01
284	SLV 7	21	-1394	2791	44.44	15.34	0.01
284	SLV 8	21	-1394	2791	44.44	15.34	0.01
284	SLV 9	-5	1530	3595	-76.48	-4.98	-0.01
284	SLV 10	-5	1530	3595	-76.48	-4.98	-0.01
284	SLV 11	16	-1219	2155	37.58	11.11	0.01
284	SLV 12	16	-1219	2155	37.58	11.11	0.01
284	SLV 13	-4	771	2350	-44.55	-4.28	0
284	SLV 14	-4	771	2350	-44.55	-4.28	0
284	SLV 15	2	-54	1918	-10.34	0.55	0
284	SLV 16	2	-54	1918	-10.34	0.55	0
285	SLU 1	9	-701	4982	30.17	5.63	0.01
285	SLU 2	9	-618	4838	26.56	5.88	0.01
285	SLU 3	10	-723	5181	31.16	5.88	0.01
285	SLU 4	10	-673	5095	28.99	6.03	0.01
285	SLU 5	10	-631	5001	27.17	6.08	0.01
285	SLU 6	10	-736	5344	31.77	6.08	0.01
285	SLU 7	10	-686	5257	29.61	6.23	0.01
285	SLU 8	10	-727	5307	31.39	6.03	0.01
285	SLU 9	10	-677	5221	29.23	6.18	0.01
285	SLU 10	10	-689	5406	29.69	6.51	0.01
285	SLU 11	11	-794	5749	34.29	6.5	0.01
285	SLU 12	11	-744	5662	32.12	6.65	0.01
285	SLU 13	11	-702	5568	30.31	6.71	0.01
285	SLU 14	11	-807	5911	34.9	6.7	0.01
285	SLU 15	11	-757	5825	32.74	6.85	0.01
285	SLU 16	11	-798	5874	34.53	6.66	0.01
285	SLU 17	11	-748	5788	32.36	6.81	0.01
285	SLU 18	11	-802	5793	34.64	6.52	0.01
285	SLU 19	11	-752	5706	32.48	6.68	0.01
285	SLU 20	11	-815	5955	35.25	6.72	0.01
285	SLU 21	11	-765	5869	33.09	6.88	0.01
285	SLU 22	11	-774	5558	33.4	6.28	0.01
285	SLU 23	10	-691	5414	29.79	6.53	0.01
285	SLU 24	11	-796	5757	34.39	6.53	0.01
285	SLU 25	11	-746	5671	32.22	6.68	0.01
285	SLU 26	11	-704	5576	30.4	6.73	0.01
285	SLU 27	11	-809	5920	35	6.73	0.01
285	SLU 28	11	-759	5833	32.84	6.88	0.01
285	SLU 29	11	-800	5883	34.62	6.68	0.01
285	SLU 30	11	-750	5796	32.46	6.83	0.01
285	SLU 31	11	-762	5982	32.92	7.16	0.01
285	SLU 32	12	-867	6325	37.52	7.15	0.01
285	SLU 33	12	-817	6238	35.35	7.3	0.01
285	SLU 34	12	-775	6144	33.54	7.36	0.01
285	SLU 35	12	-880	6487	38.13	7.35	0.01
285	SLU 36	12	-830	6401	35.97	7.5	0.01
285	SLU 37	12	-871	6450	37.75	7.31	0.01
285	SLU 38	12	-821	6364	35.59	7.46	0.01
285	SLU 39	12	-875	6369	37.87	7.17	0.01
285	SLU 40	12	-825	6282	35.71	7.33	0.01
285	SLU 41	12	-888	6531	38.48	7.37	0.01
285	SLU 42	12	-838	6445	36.32	7.53	0.01
285	SLU 43	12	-886	6279	38.11	7.1	0.01
285	SLU 44	12	-803	6135	34.5	7.35	0.01
285	SLU 45	12	-908	6479	39.1	7.34	0.01
285	SLU 46	12	-858	6392	36.94	7.5	0.01
285	SLU 47	12	-816	6298	35.12	7.55	0.01
285	SLU 48	13	-921	6641	39.71	7.54	0.01
285	SLU 49	13	-871	6555	37.55	7.7	0.01
285	SLU 50	13	-912	6604	39.34	7.5	0.01
285	SLU 51	12	-862	6518	37.17	7.65	0.01
285	SLU 52	13	-874	6703	37.64	7.98	0.01

Nodo	Cont.	Reazione a traslazione			Reazione a rotazione		
Ind.	N.br.	x	y	z	x	y	z
285	SLU 53	13	-979	7046	42.23	7.97	0.01
285	SLU 54	13	-929	6960	40.07	8.12	0.01
285	SLU 55	13	-887	6865	38.25	8.18	0.01
285	SLU 56	14	-992	7208	42.84	8.17	0.01
285	SLU 57	14	-942	7122	40.68	8.32	0.01
285	SLU 58	14	-983	7172	42.47	8.12	0.01
285	SLU 59	13	-933	7085	40.3	8.28	0.01
285	SLU 60	13	-987	7090	42.58	7.99	0.01
285	SLU 61	13	-938	7004	40.42	8.14	0.01
285	SLU 62	14	-1000	7252	43.2	8.19	0.01
285	SLU 63	14	-951	7166	41.03	8.34	0.01
285	SLU 64	13	-959	6855	41.34	7.75	0.01
285	SLU 65	13	-876	6711	37.73	8	0.01
285	SLU 66	13	-981	7054	42.33	7.99	0.01
285	SLU 67	13	-931	6968	40.16	8.15	0.01
285	SLU 68	13	-889	6874	38.35	8.2	0.01
285	SLU 69	14	-994	7217	42.94	8.19	0.01
285	SLU 70	14	-944	7130	40.78	8.35	0.01
285	SLU 71	14	-985	7180	42.56	8.15	0.01
285	SLU 72	13	-935	7094	40.4	8.3	0.01
285	SLU 73	14	-947	7279	40.87	8.63	0.01
285	SLU 74	14	-1052	7622	45.46	8.62	0.01
285	SLU 75	14	-1002	7536	43.3	8.77	0.01
285	SLU 76	14	-960	7441	41.48	8.83	0.01
285	SLU 77	15	-1065	7784	46.07	8.82	0.01
285	SLU 78	15	-1015	7698	43.91	8.97	0.01
285	SLU 79	15	-1056	7747	45.7	8.77	0.01
285	SLU 80	14	-1006	7661	43.53	8.92	0.01
285	SLU 81	14	-1060	7666	45.81	8.64	0.01
285	SLU 82	14	-1011	7579	43.65	8.79	0.01
285	SLU 83	15	-1073	7828	46.43	8.84	0.01
285	SLU 84	15	-1024	7742	44.26	8.99	0.01
285	SLE RA 1	10	-722	5147	31.09	5.82	0.01
285	SLE RA 2	10	-667	5051	28.69	5.99	0.01
285	SLE RA 3	10	-736	5280	31.75	5.98	0.01
285	SLE RA 4	10	-703	5222	30.31	6.08	0.01
285	SLE RA 5	10	-675	5159	29.09	6.12	0.01
285	SLE RA 6	10	-745	5388	32.16	6.11	0.01
285	SLE RA 7	10	-712	5330	30.72	6.22	0.01
285	SLE RA 8	10	-739	5363	31.91	6.08	0.01
285	SLE RA 9	10	-706	5306	30.46	6.19	0.01
285	SLE RA 10	10	-714	5429	30.77	6.4	0.01
285	SLE RA 11	11	-784	5658	33.84	6.4	0.01
285	SLE RA 12	11	-750	5600	32.39	6.5	0.01
285	SLE RA 13	10	-722	5537	31.18	6.54	0.01
285	SLE RA 14	11	-792	5766	34.25	6.53	0.01
285	SLE RA 15	11	-759	5708	32.8	6.63	0.01
285	SLE RA 16	11	-786	5741	33.99	6.5	0.01
285	SLE RA 17	11	-753	5684	32.55	6.6	0.01
285	SLE RA 18	11	-789	5687	34.07	6.41	0.01
285	SLE RA 19	11	-756	5630	32.63	6.51	0.01
285	SLE RA 20	11	-798	5795	34.48	6.55	0.01
285	SLE RA 21	11	-765	5738	33.04	6.65	0.01
285	SLE FR 1	10	-722	5147	31.09	5.82	0.01
285	SLE FR 2	10	-711	5127	30.61	5.85	0.01
285	SLE FR 3	10	-725	5190	31.25	5.87	0.01
285	SLE FR 4	10	-731	5290	31.5	6.03	0.01
285	SLE FR 5	10	-745	5352	32.15	6.05	0.01
285	SLE FR 6	10	-755	5417	32.58	6.11	0.01
285	SLE QP 1	10	-722	5147	31.09	5.82	0.01
285	SLE QP 2	10	-742	5309	31.98	6	0.01
285	SLD 1	11	-661	6405	27.38	10.94	0.01
285	SLD 2	11	-661	6405	27.38	10.94	0.01
285	SLD 3	23	-1170	7301	49.78	18.33	0.02
285	SLD 4	23	-1170	7301	49.78	18.33	0.02
285	SLD 5	-7	54	4280	-3.37	-3.72	0
285	SLD 6	-7	54	4280	-3.37	-3.72	0
285	SLD 7	31	-1642	7265	71.29	20.9	0.02
285	SLD 8	31	-1642	7265	71.29	20.9	0.02
285	SLD 9	-11	158	3353	-7.33	-8.91	-0.01
285	SLD 10	-11	158	3353	-7.33	-8.91	-0.01
285	SLD 11	27	-1538	6338	67.34	15.71	0.01
285	SLD 12	27	-1538	6338	67.34	15.71	0.01
285	SLD 13	-3	-314	3317	14.19	-6.33	-0.01
285	SLD 14	-3	-314	3317	14.19	-6.33	-0.01
285	SLD 15	9	-823	4212	36.59	1.05	0
285	SLD 16	9	-823	4212	36.59	1.05	0
285	SLV 1	13	-559	7778	21.57	17.45	0.02
285	SLV 2	13	-559	7778	21.57	17.45	0.02
285	SLV 3	42	-1744	9880	73.76	36.25	0.04
285	SLV 4	42	-1744	9880	73.76	36.25	0.04
285	SLV 5	-33	1111	2862	-50.29	-19.08	-0.01
285	SLV 6	-33	1111	2862	-50.29	-19.08	-0.01
285	SLV 7	64	-2840	9868	123.66	43.59	0.04
285	SLV 8	64	-2840	9868	123.66	43.59	0.04
285	SLV 9	-44	1356	749	-59.69	-31.59	-0.03
285	SLV 10	-44	1356	749	-59.69	-31.59	-0.03
285	SLV 11	53	-2595	7756	114.26	31.07	0.02
285	SLV 12	53	-2595	7756	114.26	31.07	0.02
285	SLV 13	-22	260	738	-9.79	-24.26	-0.03
285	SLV 14	-22	260	738	-9.79	-24.26	-0.03

Nodo	Cont.	Reazione a traslazione			Reazione a rotazione		
Ind.	N.br.	x	y	z	x	y	z
285	SLV 15	7	-925	2839	42.4	-5.46	-0.01
285	SLV 16	7	-925	2839	42.4	-5.46	-0.01
286	SLU 1	-6	-127	3107	5.18	-4.18	0
286	SLU 2	-6	-127	3109	5.18	-4.18	0
286	SLU 3	-6	-126	3180	5.21	-4.29	0
286	SLU 4	-6	-126	3181	5.21	-4.29	0
286	SLU 5	-6	-123	3142	5.1	-4.22	0
286	SLU 6	-6	-123	3214	5.12	-4.33	0
286	SLU 7	-6	-123	3215	5.12	-4.33	0
286	SLU 8	-6	-120	3174	5.01	-4.25	0
286	SLU 9	-6	-120	3175	5.01	-4.25	0
286	SLU 10	-7	-151	3550	6.11	-4.97	0
286	SLU 11	-7	-151	3622	6.13	-5.08	0
286	SLU 12	-7	-151	3623	6.13	-5.08	0
286	SLU 13	-7	-147	3584	6.02	-5	0
286	SLU 14	-7	-147	3656	6.05	-5.11	0
286	SLU 15	-7	-147	3657	6.05	-5.11	0
286	SLU 16	-7	-144	3616	5.94	-5.04	0
286	SLU 17	-7	-144	3617	5.94	-5.04	0
286	SLU 18	-8	-162	3738	6.5	-5.31	0
286	SLU 19	-8	-161	3739	6.5	-5.31	0
286	SLU 20	-8	-158	3772	6.42	-5.34	0
286	SLU 21	-8	-158	3773	6.42	-5.34	0
286	SLU 22	-7	-152	3546	6.11	-4.97	0
286	SLU 23	-7	-152	3547	6.11	-4.97	0
286	SLU 24	-7	-152	3619	6.14	-5.08	0
286	SLU 25	-7	-152	3620	6.14	-5.08	0
286	SLU 26	-7	-149	3581	6.03	-5	0
286	SLU 27	-7	-148	3653	6.05	-5.11	0
286	SLU 28	-7	-148	3653	6.05	-5.11	0
286	SLU 29	-7	-145	3613	5.94	-5.04	0
286	SLU 30	-7	-145	3614	5.95	-5.04	0
286	SLU 31	-8	-177	3989	7.04	-5.75	0
286	SLU 32	-8	-176	4061	7.06	-5.86	-0.01
286	SLU 33	-8	-176	4062	7.06	-5.86	-0.01
286	SLU 34	-8	-173	4023	6.96	-5.79	0
286	SLU 35	-9	-173	4094	6.98	-5.9	-0.01
286	SLU 36	-9	-173	4095	6.98	-5.9	-0.01
286	SLU 37	-8	-169	4055	6.87	-5.83	0
286	SLU 38	-8	-169	4056	6.87	-5.83	0
286	SLU 39	-9	-187	4177	7.43	-6.09	-0.01
286	SLU 40	-9	-187	4178	7.44	-6.09	-0.01
286	SLU 41	-9	-183	4210	7.35	-6.13	-0.01
286	SLU 42	-9	-183	4211	7.35	-6.13	-0.01
286	SLU 43	-8	-156	3889	6.42	-5.17	0
286	SLU 44	-8	-156	3890	6.42	-5.16	0
286	SLU 45	-8	-156	3962	6.44	-5.27	0
286	SLU 46	-8	-156	3963	6.44	-5.27	0
286	SLU 47	-8	-152	3924	6.33	-5.2	0
286	SLU 48	-8	-152	3996	6.36	-5.31	0
286	SLU 49	-8	-152	3996	6.36	-5.31	0
286	SLU 50	-8	-149	3956	6.25	-5.24	0
286	SLU 51	-8	-149	3957	6.25	-5.24	0
286	SLU 52	-9	-180	4332	7.34	-5.95	-0.01
286	SLU 53	-9	-180	4404	7.37	-6.06	-0.01
286	SLU 54	-9	-180	4405	7.37	-6.06	-0.01
286	SLU 55	-9	-177	4366	7.26	-5.99	-0.01
286	SLU 56	-9	-176	4437	7.28	-6.1	-0.01
286	SLU 57	-9	-176	4438	7.29	-6.1	-0.01
286	SLU 58	-9	-173	4398	7.17	-6.03	-0.01
286	SLU 59	-9	-173	4399	7.18	-6.03	-0.01
286	SLU 60	-9	-191	4520	7.74	-6.29	-0.01
286	SLU 61	-9	-191	4521	7.74	-6.29	-0.01
286	SLU 62	-9	-187	4553	7.66	-6.33	-0.01
286	SLU 63	-9	-187	4554	7.66	-6.33	-0.01
286	SLU 64	-9	-182	4327	7.35	-5.95	-0.01
286	SLU 65	-9	-182	4329	7.35	-5.95	-0.01
286	SLU 66	-9	-181	4401	7.37	-6.06	-0.01
286	SLU 67	-9	-181	4402	7.37	-6.06	-0.01
286	SLU 68	-9	-178	4363	7.26	-5.99	-0.01
286	SLU 69	-9	-178	4434	7.29	-6.1	-0.01
286	SLU 70	-9	-178	4435	7.29	-6.1	-0.01
286	SLU 71	-9	-174	4395	7.18	-6.03	-0.01
286	SLU 72	-9	-174	4396	7.18	-6.03	-0.01
286	SLU 73	-10	-206	4771	8.27	-6.74	-0.01
286	SLU 74	-10	-206	4842	8.3	-6.85	-0.01
286	SLU 75	-10	-206	4843	8.3	-6.85	-0.01
286	SLU 76	-10	-202	4804	8.19	-6.78	-0.01
286	SLU 77	-10	-202	4876	8.21	-6.89	-0.01
286	SLU 78	-10	-202	4877	8.22	-6.89	-0.01
286	SLU 79	-10	-199	4836	8.11	-6.81	-0.01
286	SLU 80	-10	-199	4837	8.11	-6.81	-0.01
286	SLU 81	-10	-216	4959	8.67	-7.08	-0.01
286	SLU 82	-10	-216	4959	8.67	-7.08	-0.01
286	SLU 83	-10	-213	4992	8.59	-7.12	-0.01
286	SLU 84	-10	-213	4993	8.59	-7.11	-0.01
286	SLE RA 1	-6	-134	3232	5.45	-4.41	0
286	SLE RA 2	-6	-134	3233	5.45	-4.41	0
286	SLE RA 3	-7	-134	3281	5.46	-4.48	0
286	SLE RA 4	-7	-134	3282	5.46	-4.48	0
286	SLE RA 5	-6	-132	3256	5.39	-4.43	0

Nodo	Cont.	Reazione a traslazione			Reazione a rotazione		
Ind.	N.br.	x	y	z	x	y	z
286	SLE RA 6	-7	-132	3304	5.41	-4.5	0
286	SLE RA 7	-7	-131	3304	5.41	-4.5	0
286	SLE RA 8	-6	-129	3277	5.34	-4.46	0
286	SLE RA 9	-6	-129	3278	5.34	-4.45	0
286	SLE RA 10	-7	-150	3528	6.07	-4.93	0
286	SLE RA 11	-7	-150	3576	6.08	-5	0
286	SLE RA 12	-7	-150	3576	6.08	-5	0
286	SLE RA 13	-7	-148	3550	6.01	-4.96	0
286	SLE RA 14	-7	-148	3598	6.03	-5.03	0
286	SLE RA 15	-7	-148	3599	6.03	-5.03	0
286	SLE RA 16	-7	-145	3572	5.95	-4.98	0
286	SLE RA 17	-7	-145	3572	5.95	-4.98	0
286	SLE RA 18	-7	-157	3653	6.33	-5.16	0
286	SLE RA 19	-7	-157	3654	6.33	-5.16	0
286	SLE RA 20	-8	-155	3676	6.27	-5.18	0
286	SLE RA 21	-8	-155	3676	6.27	-5.18	0
286	SLE FR 1	-6	-134	3232	5.45	-4.41	0
286	SLE FR 2	-6	-134	3233	5.45	-4.41	0
286	SLE FR 3	-6	-133	3241	5.42	-4.42	0
286	SLE FR 4	-7	-141	3359	5.71	-4.63	0
286	SLE FR 5	-7	-140	3368	5.69	-4.64	0
286	SLE FR 6	-7	-146	3443	5.89	-4.78	0
286	SLE QP 1	-6	-134	3232	5.45	-4.41	0
286	SLE QP 2	-7	-141	3359	5.71	-4.63	0
286	SLD 1	-3	211	3041	-9	-1.47	0
286	SLD 2	-3	211	3041	-9	-1.47	0
286	SLD 3	-5	-254	2906	10.65	-3.18	0
286	SLD 4	-5	-254	2906	10.65	-3.18	0
286	SLD 5	-2	670	3469	-28.5	-1.1	0
286	SLD 6	-2	670	3469	-28.5	-1.1	0
286	SLD 7	-9	-880	3017	36.99	-6.78	-0.01
286	SLD 8	-9	-880	3017	36.99	-6.78	-0.01
286	SLD 9	-4	598	3700	-25.56	-2.48	0
286	SLD 10	-4	598	3700	-25.56	-2.48	0
286	SLD 11	-11	-952	3248	39.92	-8.16	-0.01
286	SLD 12	-11	-952	3248	39.92	-8.16	-0.01
286	SLD 13	-8	-28	3812	0.78	-6.09	0
286	SLD 14	-8	-28	3812	0.78	-6.09	0
286	SLD 15	-11	-493	3676	20.42	-7.79	-0.01
286	SLD 16	-11	-493	3676	20.42	-7.79	-0.01
286	SLV 1	3	685	2601	-28.85	2.99	0
286	SLV 2	3	685	2601	-28.85	2.99	0
286	SLV 3	-3	-410	2281	17.46	-1.36	0
286	SLV 4	-3	-410	2281	17.46	-1.36	0
286	SLV 5	4	1767	3617	-74.9	4.26	0.01
286	SLV 6	4	1767	3617	-74.9	4.26	0.01
286	SLV 7	-14	-1882	2549	79.48	-10.26	-0.01
286	SLV 8	-14	-1882	2549	79.48	-10.26	-0.01
286	SLV 9	0	1600	4168	-68.05	0.99	0
286	SLV 10	0	1600	4168	-68.05	0.99	0
286	SLV 11	-18	-2049	3100	86.32	-13.52	-0.01
286	SLV 12	-18	-2049	3100	86.32	-13.52	-0.01
286	SLV 13	-11	127	4436	-6.04	-7.9	-0.01
286	SLV 14	-11	127	4436	-6.04	-7.9	-0.01
286	SLV 15	-16	-967	4116	40.28	-12.25	-0.01
286	SLV 16	-16	-967	4116	40.28	-12.25	-0.01
287	SLU 1	0	-794	4637	33.07	1.13	0
287	SLU 2	0	-689	4509	28.58	0.65	0
287	SLU 3	0	-821	4817	34.25	1.17	0
287	SLU 4	0	-758	4741	31.56	0.88	0
287	SLU 5	0	-708	4655	29.4	0.67	0
287	SLU 6	0	-840	4963	35.08	1.2	0
287	SLU 7	0	-777	4886	32.38	0.91	0
287	SLU 8	0	-832	4928	34.72	1.18	0
287	SLU 9	0	-769	4852	32.03	0.89	0
287	SLU 10	0	-776	5025	32.25	0.85	0
287	SLU 11	0	-909	5333	37.93	1.37	0
287	SLU 12	0	-846	5256	35.23	1.08	0
287	SLU 13	0	-795	5170	33.08	0.87	0
287	SLU 14	0	-928	5479	38.75	1.4	0
287	SLU 15	0	-865	5402	36.06	1.11	0
287	SLU 16	0	-919	5444	38.39	1.38	0
287	SLU 17	0	-856	5367	35.7	1.09	0
287	SLU 18	0	-918	5373	38.32	1.42	0
287	SLU 19	0	-855	5297	35.62	1.13	0
287	SLU 20	0	-937	5519	39.14	1.44	0
287	SLU 21	0	-874	5442	36.45	1.15	0
287	SLU 22	0	-883	5157	36.82	1.32	0
287	SLU 23	0	-778	5029	32.33	0.83	0
287	SLU 24	0	-911	5338	38	1.36	0
287	SLU 25	0	-848	5261	35.31	1.07	0
287	SLU 26	0	-797	5175	33.16	0.86	0
287	SLU 27	0	-930	5483	38.83	1.38	0
287	SLU 28	0	-867	5407	36.14	1.09	0
287	SLU 29	0	-921	5449	38.47	1.37	0
287	SLU 30	0	-858	5372	35.78	1.08	0
287	SLU 31	0	-865	5545	36.01	1.03	0
287	SLU 32	0	-998	5853	41.68	1.56	0
287	SLU 33	0	-935	5776	38.99	1.27	0
287	SLU 34	0	-884	5691	36.83	1.06	0
287	SLU 35	0	-1017	5999	42.5	1.58	0

Nodo	Cont.	Reazione a traslazione			Reazione a rotazione		
Ind.	N.br.	x	y	z	x	y	z
287	SLU 36	0	-954	5922	39.81	1.29	0
287	SLU 37	0	-1008	5964	42.14	1.57	0
287	SLU 38	0	-945	5888	39.45	1.28	0
287	SLU 39	0	-1008	5894	42.07	1.6	0
287	SLU 40	0	-945	5817	39.38	1.31	0
287	SLU 41	0	-1027	6039	42.89	1.63	0
287	SLU 42	0	-964	5963	40.2	1.34	0
287	SLU 43	0	-1001	5850	41.7	1.41	0
287	SLU 44	0	-896	5722	37.21	0.92	0
287	SLU 45	0	-1029	6030	42.88	1.45	0
287	SLU 46	0	-966	5953	40.19	1.16	0
287	SLU 47	0	-915	5868	38.04	0.95	0
287	SLU 48	0	-1048	6176	43.71	1.47	0
287	SLU 49	0	-985	6099	41.02	1.18	0
287	SLU 50	0	-1039	6141	43.35	1.46	0
287	SLU 51	0	-976	6064	40.66	1.17	0
287	SLU 52	0	-984	6237	40.89	1.12	0
287	SLU 53	0	-1116	6545	46.56	1.65	0
287	SLU 54	0	-1053	6469	43.87	1.36	0
287	SLU 55	0	-1003	6383	41.71	1.15	0
287	SLU 56	0	-1135	6691	47.38	1.67	0
287	SLU 57	0	-1072	6615	44.69	1.38	0
287	SLU 58	0	-1126	6657	47.03	1.66	0
287	SLU 59	0	-1063	6580	44.33	1.37	0
287	SLU 60	0	-1126	6586	46.95	1.69	0
287	SLU 61	0	-1063	6509	44.26	1.4	0
287	SLU 62	0	-1145	6732	47.77	1.72	0
287	SLU 63	0	-1082	6655	45.08	1.43	0
287	SLU 64	0	-1090	6370	45.45	1.59	0
287	SLU 65	0	-985	6242	40.96	1.11	0
287	SLU 66	0	-1118	6550	46.64	1.63	0
287	SLU 67	0	-1055	6474	43.94	1.34	0
287	SLU 68	0	-1004	6388	41.79	1.14	0
287	SLU 69	0	-1137	6696	47.46	1.66	0
287	SLU 70	0	-1074	6619	44.77	1.37	0
287	SLU 71	0	-1128	6661	47.1	1.64	0
287	SLU 72	0	-1065	6585	44.41	1.35	0
287	SLU 73	0	-1073	6758	44.64	1.31	0
287	SLU 74	0	-1205	7066	50.31	1.83	0
287	SLU 75	0	-1142	6989	47.62	1.54	0
287	SLU 76	0	-1092	6903	45.46	1.33	0
287	SLU 77	0	-1224	7211	51.14	1.86	0
287	SLU 78	0	-1161	7135	48.44	1.57	0
287	SLU 79	0	-1216	7177	50.78	1.84	0
287	SLU 80	0	-1153	7100	48.09	1.55	0
287	SLU 81	0	-1215	7106	50.7	1.88	0
287	SLU 82	0	-1152	7030	48.01	1.59	0
287	SLU 83	0	-1234	7252	51.53	1.9	0
287	SLU 84	0	-1171	7175	48.83	1.61	0
287	SLE RA 1	0	-819	4786	34.14	1.19	0
287	SLE RA 2	0	-749	4700	31.15	0.86	0
287	SLE RA 3	0	-838	4906	34.93	1.21	0
287	SLE RA 4	0	-796	4855	33.13	1.02	0
287	SLE RA 5	0	-762	4798	31.7	0.88	0
287	SLE RA 6	0	-850	5003	35.48	1.23	0
287	SLE RA 7	0	-808	4952	33.68	1.03	0
287	SLE RA 8	0	-844	4980	35.24	1.22	0
287	SLE RA 9	0	-802	4929	33.44	1.03	0
287	SLE RA 10	0	-807	5044	33.6	1	0
287	SLE RA 11	0	-896	5249	37.38	1.34	0
287	SLE RA 12	0	-854	5198	35.58	1.15	0
287	SLE RA 13	0	-820	5141	34.15	1.01	0
287	SLE RA 14	0	-909	5347	37.93	1.36	0
287	SLE RA 15	0	-867	5296	36.13	1.17	0
287	SLE RA 16	0	-903	5324	37.69	1.35	0
287	SLE RA 17	0	-861	5272	35.89	1.16	0
287	SLE RA 18	0	-902	5277	37.64	1.38	0
287	SLE RA 19	0	-860	5225	35.84	1.18	0
287	SLE RA 20	0	-915	5374	38.19	1.39	0
287	SLE RA 21	0	-873	5323	36.39	1.2	0
287	SLE FR 1	0	-819	4786	34.14	1.19	0
287	SLE FR 2	0	-805	4769	33.54	1.12	0
287	SLE FR 3	0	-824	4824	34.36	1.19	0
287	SLE FR 4	0	-830	4916	34.59	1.18	0
287	SLE FR 5	0	-849	4972	35.41	1.25	0
287	SLE FR 6	0	-861	5031	35.89	1.28	0
287	SLE QP 1	0	-819	4786	34.14	1.19	0
287	SLE QP 2	0	-844	4933	35.19	1.24	0
287	SLD 1	-1	-412	2857	16.31	5.26	0.02
287	SLD 2	-1	-412	2857	16.31	5.26	0.02
287	SLD 3	10	-980	3727	41.05	12.19	0
287	SLD 4	10	-980	3727	41.05	12.19	0
287	SLD 5	-18	147	2991	-8	-8.06	0.02
287	SLD 6	-18	147	2991	-8	-8.06	0.02
287	SLD 7	21	-1746	5890	74.47	15.03	-0.02
287	SLD 8	21	-1746	5890	74.47	15.03	-0.02
287	SLD 9	-21	58	3975	-4.09	-12.55	0.01
287	SLD 10	-21	58	3975	-4.09	-12.55	0.01
287	SLD 11	18	-1835	6875	78.37	10.54	-0.02
287	SLD 12	18	-1835	6875	78.37	10.54	-0.02
287	SLD 13	-10	-708	6139	29.33	-9.7	-0.01

Nodo	Cont.	Reazione a traslazione			Reazione a rotazione		
Ind.	N.br.	x	y	z	x	y	z
287	SLD 14	-10	-708	6139	29.33	-9.7	-0.01
287	SLD 15	1	-1276	7008	54.07	-2.78	-0.02
287	SLD 16	1	-1276	7008	54.07	-2.78	-0.02
287	SLV 1	-4	168	183	-8.93	10.52	0.04
287	SLV 2	-4	168	183	-8.93	10.52	0.04
287	SLV 3	26	-1156	2225	48.73	28.22	0.01
287	SLV 4	26	-1156	2225	48.73	28.22	0.01
287	SLV 5	-47	1468	411	-65.51	-22.83	0.05
287	SLV 6	-47	1468	411	-65.51	-22.83	0.05
287	SLV 7	54	-2946	7218	126.71	36.19	-0.04
287	SLV 8	54	-2946	7218	126.71	36.19	-0.04
287	SLV 9	-54	1257	2648	-56.33	-33.7	0.03
287	SLV 10	-54	1257	2648	-56.33	-33.7	0.03
287	SLV 11	47	-3156	9455	135.88	25.31	-0.05
287	SLV 12	47	-3156	9455	135.88	25.31	-0.05
287	SLV 13	-27	-532	7640	21.65	-25.74	-0.02
287	SLV 14	-27	-532	7640	21.65	-25.74	-0.02
287	SLV 15	4	-1856	9682	79.31	-8.03	-0.04
287	SLV 16	4	-1856	9682	79.31	-8.03	-0.04
288	SLU 1	10	-149	3084	4.34	7.17	0.12
288	SLU 2	10	-156	3091	4.63	7.1	0.12
288	SLU 3	10	-158	3174	4.66	7.4	0.13
288	SLU 4	10	-162	3178	4.83	7.36	0.13
288	SLU 5	10	-164	3151	4.93	7.24	0.12
288	SLU 6	10	-167	3233	4.97	7.55	0.13
288	SLU 7	10	-171	3238	5.14	7.51	0.13
288	SLU 8	10	-166	3202	4.95	7.46	0.13
288	SLU 9	10	-170	3207	5.12	7.42	0.13
288	SLU 10	11	-170	3477	5	8.17	0.14
288	SLU 11	11	-173	3559	5.04	8.48	0.15
288	SLU 12	11	-177	3564	5.21	8.44	0.14
288	SLU 13	11	-179	3536	5.31	8.32	0.14
288	SLU 14	12	-181	3618	5.34	8.62	0.15
288	SLU 15	12	-185	3623	5.51	8.58	0.15
288	SLU 16	11	-180	3587	5.32	8.53	0.15
288	SLU 17	11	-185	3592	5.5	8.49	0.15
288	SLU 18	12	-169	3634	4.88	8.7	0.15
288	SLU 19	12	-173	3639	5.05	8.66	0.15
288	SLU 20	12	-178	3693	5.18	8.85	0.15
288	SLU 21	12	-182	3698	5.35	8.81	0.15
288	SLU 22	11	-166	3460	4.83	8.22	0.14
288	SLU 23	11	-173	3468	5.12	8.16	0.14
288	SLU 24	11	-176	3550	5.15	8.46	0.15
288	SLU 25	11	-180	3555	5.32	8.42	0.14
288	SLU 26	11	-182	3527	5.42	8.3	0.14
288	SLU 27	12	-184	3610	5.45	8.61	0.15
288	SLU 28	12	-188	3614	5.62	8.57	0.15
288	SLU 29	11	-183	3579	5.43	8.51	0.15
288	SLU 30	11	-188	3583	5.61	8.47	0.15
288	SLU 31	12	-187	3854	5.49	9.23	0.16
288	SLU 32	13	-190	3936	5.52	9.54	0.16
288	SLU 33	13	-194	3941	5.69	9.5	0.16
288	SLU 34	13	-196	3913	5.79	9.38	0.16
288	SLU 35	13	-198	3995	5.82	9.68	0.17
288	SLU 36	13	-203	4000	6	9.64	0.17
288	SLU 37	13	-198	3964	5.81	9.59	0.16
288	SLU 38	13	-202	3969	5.98	9.55	0.16
288	SLU 39	13	-186	4011	5.36	9.76	0.17
288	SLU 40	13	-191	4016	5.54	9.72	0.17
288	SLU 41	13	-195	4070	5.67	9.9	0.17
288	SLU 42	13	-199	4075	5.84	9.87	0.17
288	SLU 43	12	-188	3879	5.48	8.95	0.15
288	SLU 44	12	-195	3887	5.77	8.89	0.15
288	SLU 45	12	-197	3969	5.8	9.19	0.16
288	SLU 46	12	-201	3974	5.97	9.15	0.16
288	SLU 47	12	-203	3946	6.07	9.03	0.15
288	SLU 48	13	-206	4029	6.1	9.34	0.16
288	SLU 49	13	-210	4033	6.27	9.3	0.16
288	SLU 50	12	-205	3998	6.09	9.24	0.16
288	SLU 51	12	-209	4002	6.26	9.2	0.16
288	SLU 52	13	-209	4273	6.14	9.96	0.17
288	SLU 53	14	-211	4355	6.17	10.27	0.18
288	SLU 54	14	-215	4360	6.35	10.23	0.17
288	SLU 55	14	-217	4332	6.44	10.11	0.17
288	SLU 56	14	-220	4414	6.48	10.41	0.18
288	SLU 57	14	-224	4419	6.65	10.37	0.18
288	SLU 58	14	-219	4383	6.46	10.32	0.18
288	SLU 59	14	-223	4388	6.63	10.28	0.18
288	SLU 60	14	-208	4430	6.02	10.49	0.18
288	SLU 61	14	-212	4435	6.19	10.45	0.18
288	SLU 62	14	-217	4489	6.32	10.63	0.18
288	SLU 63	14	-221	4494	6.49	10.59	0.18
288	SLU 64	13	-205	4256	5.97	10.01	0.17
288	SLU 65	13	-212	4264	6.25	9.94	0.17
288	SLU 66	14	-214	4346	6.28	10.25	0.18
288	SLU 67	14	-218	4351	6.46	10.21	0.17
288	SLU 68	14	-220	4323	6.55	10.09	0.17
288	SLU 69	14	-223	4405	6.59	10.39	0.18
288	SLU 70	14	-227	4410	6.76	10.35	0.18
288	SLU 71	14	-222	4375	6.57	10.3	0.18
288	SLU 72	14	-226	4379	6.74	10.26	0.18

Nodo	Cont.	Reazione a traslazione			Reazione a rotazione		
Ind.	N.br.	x	y	z	x	y	z
288	SLU 73	15	-226	4650	6.63	11.02	0.19
288	SLU 74	15	-228	4732	6.66	11.32	0.19
288	SLU 75	15	-233	4737	6.83	11.28	0.19
288	SLU 76	15	-235	4709	6.93	11.16	0.19
288	SLU 77	15	-237	4791	6.96	11.47	0.2
288	SLU 78	15	-241	4796	7.13	11.43	0.2
288	SLU 79	15	-236	4760	6.95	11.38	0.2
288	SLU 80	15	-241	4765	7.12	11.34	0.19
288	SLU 81	16	-225	4807	6.5	11.55	0.2
288	SLU 82	15	-229	4812	6.67	11.51	0.2
288	SLU 83	16	-234	4866	6.8	11.69	0.2
288	SLU 84	16	-238	4871	6.98	11.65	0.2
288	SLE RA 1	10	-154	3191	4.48	7.47	0.13
288	SLE RA 2	10	-158	3197	4.67	7.42	0.13
288	SLE RA 3	10	-160	3251	4.69	7.63	0.13
288	SLE RA 4	10	-163	3254	4.81	7.6	0.13
288	SLE RA 5	10	-164	3236	4.88	7.52	0.13
288	SLE RA 6	10	-166	3291	4.9	7.72	0.13
288	SLE RA 7	10	-169	3294	5.01	7.7	0.13
288	SLE RA 8	10	-165	3270	4.89	7.66	0.13
288	SLE RA 9	10	-168	3273	5	7.63	0.13
288	SLE RA 10	11	-168	3454	4.92	8.14	0.14
288	SLE RA 11	11	-170	3508	4.94	8.34	0.14
288	SLE RA 12	11	-172	3511	5.06	8.32	0.14
288	SLE RA 13	11	-174	3493	5.12	8.24	0.14
288	SLE RA 14	11	-175	3548	5.15	8.44	0.14
288	SLE RA 15	11	-178	3551	5.26	8.41	0.14
288	SLE RA 16	11	-175	3527	5.14	8.38	0.14
288	SLE RA 17	11	-178	3530	5.25	8.35	0.14
288	SLE RA 18	11	-167	3558	4.84	8.49	0.15
288	SLE RA 19	11	-170	3562	4.95	8.47	0.14
288	SLE RA 20	12	-173	3598	5.04	8.59	0.15
288	SLE RA 21	12	-176	3601	5.16	8.56	0.15
288	SLE FR 1	10	-154	3191	4.48	7.47	0.13
288	SLE FR 2	10	-155	3192	4.52	7.46	0.13
288	SLE FR 3	10	-156	3207	4.56	7.51	0.13
288	SLE FR 4	10	-159	3302	4.63	7.77	0.13
288	SLE FR 5	11	-160	3317	4.67	7.81	0.13
288	SLE FR 6	11	-161	3375	4.66	7.98	0.14
288	SLE QP 1	10	-154	3191	4.48	7.47	0.13
288	SLE QP 2	10	-158	3301	4.59	7.78	0.13
288	SLD 1	14	-90	3200	2.06	11.25	0.11
288	SLD 2	14	-90	3200	2.06	11.25	0.11
288	SLD 3	13	-580	3897	20.41	10.45	0.1
288	SLD 4	13	-580	3897	20.41	10.45	0.1
288	SLD 5	13	605	2213	-24	10.02	0.14
288	SLD 6	13	605	2213	-24	10.02	0.14
288	SLD 7	9	-1027	4538	37.16	7.37	0.11
288	SLD 8	9	-1027	4538	37.16	7.37	0.11
288	SLD 9	11	711	2064	-27.98	8.18	0.16
288	SLD 10	11	711	2064	-27.98	8.18	0.16
288	SLD 11	8	-920	4390	33.17	5.53	0.13
288	SLD 12	8	-920	4390	33.17	5.53	0.13
288	SLD 13	8	264	2705	-11.23	5.1	0.17
288	SLD 14	8	264	2705	-11.23	5.1	0.17
288	SLD 15	7	-225	3403	7.12	4.3	0.16
288	SLD 16	7	-225	3403	7.12	4.3	0.16
288	SLV 1	19	-3	3057	-1.21	16.08	0.07
288	SLV 2	19	-3	3057	-1.21	16.08	0.07
288	SLV 3	16	-1159	4702	42.13	14.12	0.05
288	SLV 4	16	-1159	4702	42.13	14.12	0.05
288	SLV 5	17	1642	732	-62.88	13.24	0.15
288	SLV 6	17	1642	732	-62.88	13.24	0.15
288	SLV 7	8	-2212	6218	81.58	6.71	0.07
288	SLV 8	8	-2212	6218	81.58	6.71	0.07
288	SLV 9	13	1896	385	-72.4	8.84	0.19
288	SLV 10	13	1896	385	-72.4	8.84	0.19
288	SLV 11	4	-1957	5871	72.06	2.31	0.12
288	SLV 12	4	-1957	5871	72.06	2.31	0.12
288	SLV 13	5	844	1900	-32.95	1.43	0.22
288	SLV 14	5	844	1900	-32.95	1.43	0.22
288	SLV 15	2	-312	3546	10.39	-0.53	0.2
288	SLV 16	2	-312	3546	10.39	-0.53	0.2
289	SLU 1	-1	20	2561	2.07	2.14	0.02
289	SLU 2	-1	15	2562	2.3	2.11	0.02
289	SLU 3	-1	19	2614	2.15	2.23	0.02
289	SLU 4	-1	16	2615	2.29	2.21	0.02
289	SLU 5	-1	14	2587	2.35	2.17	0.02
289	SLU 6	-1	18	2640	2.21	2.28	0.02
289	SLU 7	-1	15	2640	2.34	2.26	0.02
289	SLU 8	-1	18	2611	2.18	2.25	0.02
289	SLU 9	-1	15	2612	2.31	2.23	0.02
289	SLU 10	-1	25	2892	2.37	2.44	0.02
289	SLU 11	-1	29	2945	2.23	2.56	0.02
289	SLU 12	-1	26	2946	2.36	2.54	0.02
289	SLU 13	-1	24	2918	2.42	2.49	0.02
289	SLU 14	-1	28	2970	2.28	2.61	0.02
289	SLU 15	-1	25	2971	2.42	2.59	0.02
289	SLU 16	-1	28	2942	2.25	2.58	0.02
289	SLU 17	-1	25	2943	2.38	2.56	0.02
289	SLU 18	-1	34	3033	2.17	2.61	0.02

Nodo	Cont.	Reazione a traslazione			Reazione a rotazione		
Ind.	N.br.	x	y	z	x	y	z
289	SLU 19	-1	31	3034	2.31	2.59	0.02
289	SLU 20	-1	33	3059	2.23	2.67	0.02
289	SLU 21	-1	30	3059	2.36	2.65	0.02
289	SLU 22	-1	27	2872	2.18	2.48	0.02
289	SLU 23	-1	23	2873	2.41	2.45	0.02
289	SLU 24	-1	27	2926	2.26	2.57	0.02
289	SLU 25	-1	24	2927	2.4	2.55	0.02
289	SLU 26	-1	22	2899	2.46	2.5	0.02
289	SLU 27	-1	26	2951	2.31	2.62	0.02
289	SLU 28	-1	23	2952	2.45	2.6	0.02
289	SLU 29	-1	25	2923	2.28	2.59	0.02
289	SLU 30	-1	23	2924	2.42	2.57	0.02
289	SLU 31	-1	33	3204	2.48	2.78	0.02
289	SLU 32	-1	36	3257	2.33	2.9	0.02
289	SLU 33	-1	34	3257	2.47	2.88	0.02
289	SLU 34	-1	32	3229	2.53	2.83	0.02
289	SLU 35	-1	36	3282	2.39	2.95	0.02
289	SLU 36	-1	33	3283	2.52	2.93	0.02
289	SLU 37	-1	35	3254	2.35	2.92	0.02
289	SLU 38	-1	32	3254	2.49	2.9	0.02
289	SLU 39	-1	41	3345	2.28	2.95	0.02
289	SLU 40	-1	39	3346	2.42	2.93	0.02
289	SLU 41	-1	41	3370	2.33	3.01	0.02
289	SLU 42	-1	38	3371	2.47	2.99	0.02
289	SLU 43	-1	23	3222	2.65	2.67	0.02
289	SLU 44	-1	18	3223	2.88	2.64	0.02
289	SLU 45	-1	22	3276	2.74	2.76	0.02
289	SLU 46	-1	19	3276	2.88	2.74	0.02
289	SLU 47	-1	17	3248	2.94	2.69	0.02
289	SLU 48	-1	21	3301	2.79	2.81	0.02
289	SLU 49	-1	18	3302	2.93	2.79	0.02
289	SLU 50	-1	21	3273	2.76	2.78	0.02
289	SLU 51	-1	18	3273	2.9	2.76	0.02
289	SLU 52	-1	28	3554	2.95	2.97	0.02
289	SLU 53	-1	32	3607	2.81	3.08	0.02
289	SLU 54	-1	29	3607	2.95	3.06	0.02
289	SLU 55	-1	27	3579	3.01	3.02	0.02
289	SLU 56	-1	31	3632	2.86	3.14	0.02
289	SLU 57	-1	28	3632	3	3.12	0.02
289	SLU 58	-1	31	3604	2.83	3.11	0.02
289	SLU 59	-1	28	3604	2.97	3.09	0.02
289	SLU 60	-1	37	3695	2.76	3.14	0.02
289	SLU 61	-1	34	3695	2.89	3.12	0.02
289	SLU 62	-1	36	3720	2.81	3.2	0.02
289	SLU 63	-1	33	3721	2.95	3.18	0.02
289	SLU 64	-1	31	3534	2.76	3.01	0.02
289	SLU 65	-1	26	3535	2.99	2.98	0.02
289	SLU 66	-1	30	3587	2.85	3.09	0.02
289	SLU 67	-1	27	3588	2.98	3.07	0.02
289	SLU 68	-1	25	3560	3.04	3.03	0.02
289	SLU 69	-1	29	3613	2.9	3.15	0.02
289	SLU 70	-1	26	3613	3.04	3.13	0.02
289	SLU 71	-1	29	3584	2.87	3.12	0.02
289	SLU 72	-1	26	3585	3	3.1	0.02
289	SLU 73	-1	36	3866	3.06	3.31	0.03
289	SLU 74	-2	40	3918	2.92	3.42	0.03
289	SLU 75	-2	37	3919	3.05	3.4	0.03
289	SLU 76	-2	35	3891	3.11	3.36	0.03
289	SLU 77	-2	39	3943	2.97	3.48	0.03
289	SLU 78	-2	36	3944	3.11	3.46	0.03
289	SLU 79	-1	39	3915	2.94	3.45	0.03
289	SLU 80	-2	36	3916	3.08	3.43	0.03
289	SLU 81	-2	45	4006	2.86	3.48	0.03
289	SLU 82	-2	42	4007	3	3.46	0.03
289	SLU 83	-2	44	4032	2.92	3.53	0.03
289	SLU 84	-2	41	4032	3.05	3.51	0.03
289	SLE RA 1	-1	22	2650	2.1	2.24	0.02
289	SLE RA 2	-1	19	2650	2.25	2.22	0.02
289	SLE RA 3	-1	21	2686	2.16	2.3	0.02
289	SLE RA 4	-1	19	2686	2.25	2.28	0.02
289	SLE RA 5	-1	18	2667	2.29	2.26	0.02
289	SLE RA 6	-1	21	2702	2.19	2.33	0.02
289	SLE RA 7	-1	19	2703	2.28	2.32	0.02
289	SLE RA 8	-1	21	2684	2.17	2.31	0.02
289	SLE RA 9	-1	19	2684	2.26	2.3	0.02
289	SLE RA 10	-1	25	2871	2.3	2.44	0.02
289	SLE RA 11	-1	28	2906	2.2	2.52	0.02
289	SLE RA 12	-1	26	2906	2.3	2.5	0.02
289	SLE RA 13	-1	25	2888	2.34	2.47	0.02
289	SLE RA 14	-1	27	2923	2.24	2.55	0.02
289	SLE RA 15	-1	25	2923	2.33	2.54	0.02
289	SLE RA 16	-1	27	2904	2.22	2.53	0.02
289	SLE RA 17	-1	25	2904	2.31	2.52	0.02
289	SLE RA 18	-1	31	2965	2.17	2.55	0.02
289	SLE RA 19	-1	29	2965	2.26	2.54	0.02
289	SLE RA 20	-1	31	2982	2.2	2.59	0.02
289	SLE RA 21	-1	29	2982	2.3	2.58	0.02
289	SLE FR 1	-1	22	2650	2.1	2.24	0.02
289	SLE FR 2	-1	21	2650	2.13	2.24	0.02
289	SLE FR 3	-1	22	2657	2.11	2.26	0.02
289	SLE FR 4	-1	24	2744	2.15	2.33	0.02

Nodo	Cont.	Reazione a traslazione			Reazione a rotazione		
Ind.	N.br.	x	y	z	x	y	z
289	SLE FR 5	-1	24	2751	2.14	2.35	0.02
289	SLE FR 6	-1	27	2807	2.13	2.4	0.02
289	SLE QP 1	-1	22	2650	2.1	2.24	0.02
289	SLE QP 2	-1	25	2744	2.12	2.34	0.02
289	SLD 1	-2	19	2440	2.72	3.93	0.02
289	SLD 2	-2	19	2440	2.72	3.93	0.02
289	SLD 3	-3	-386	2711	21.08	3.1	0.03
289	SLD 4	-3	-386	2711	21.08	3.1	0.03
289	SLD 5	1	639	2243	-25.55	4.06	0.01
289	SLD 6	1	639	2243	-25.55	4.06	0.01
289	SLD 7	-4	-714	3144	35.66	1.32	0.03
289	SLD 8	-4	-714	3144	35.66	1.32	0.03
289	SLD 9	2	763	2344	-31.41	3.36	0.01
289	SLD 10	2	763	2344	-31.41	3.36	0.01
289	SLD 11	-3	-589	3246	29.79	0.61	0.02
289	SLD 12	-3	-589	3246	29.79	0.61	0.02
289	SLD 13	1	436	2778	-16.84	1.57	0.01
289	SLD 14	1	436	2778	-16.84	1.57	0.01
289	SLD 15	-1	30	3048	1.52	0.74	0.01
289	SLD 16	-1	30	3048	1.52	0.74	0.01
289	SLV 1	-2	12	2025	3.46	6.13	0.03
289	SLV 2	-2	12	2025	3.46	6.13	0.03
289	SLV 3	-6	-943	2670	46.67	4.09	0.04
289	SLV 4	-6	-943	2670	46.67	4.09	0.04
289	SLV 5	5	1470	1551	-63.03	6.57	0.01
289	SLV 6	5	1470	1551	-63.03	6.57	0.01
289	SLV 7	-9	-1715	3699	81.04	-0.23	0.04
289	SLV 8	-9	-1715	3699	81.04	-0.23	0.04
289	SLV 9	7	1764	1789	-76.79	4.9	0
289	SLV 10	7	1764	1789	-76.79	4.9	0
289	SLV 11	-7	-1421	3938	67.27	-1.9	0.03
289	SLV 12	-7	-1421	3938	67.27	-1.9	0.03
289	SLV 13	4	993	2819	-42.43	0.58	0
289	SLV 14	4	993	2819	-42.43	0.58	0
289	SLV 15	0	37	3463	0.79	-1.46	0.01
289	SLV 16	0	37	3463	0.79	-1.46	0.01
290	SLU 1	6	-284	3006	25.78	3.97	0.01
290	SLU 2	6	-284	3007	25.81	3.97	0.01
290	SLU 3	6	-289	3077	26.5	4.07	0.01
290	SLU 4	6	-289	3078	26.52	4.07	0.01
290	SLU 5	6	-284	3042	26.14	4.01	0.01
290	SLU 6	6	-289	3112	26.83	4.11	0.01
290	SLU 7	6	-289	3113	26.85	4.11	0.01
290	SLU 8	6	-284	3076	26.45	4.05	0.01
290	SLU 9	6	-285	3076	26.46	4.04	0.01
290	SLU 10	7	-325	3424	29.61	4.67	0.01
290	SLU 11	7	-330	3494	30.3	4.77	0.01
290	SLU 12	7	-330	3495	30.31	4.77	0.01
290	SLU 13	7	-326	3459	29.94	4.7	0.01
290	SLU 14	7	-330	3529	30.63	4.81	0.01
290	SLU 15	7	-331	3530	30.64	4.81	0.01
290	SLU 16	7	-325	3493	30.24	4.74	0.01
290	SLU 17	7	-326	3493	30.26	4.74	0.01
290	SLU 18	7	-342	3602	31.2	4.97	0.01
290	SLU 19	7	-343	3602	31.22	4.97	0.01
290	SLU 20	7	-343	3637	31.53	5	0.01
290	SLU 21	7	-343	3637	31.55	5	0.01
290	SLU 22	7	-328	3417	29.67	4.67	0.01
290	SLU 23	7	-328	3418	29.69	4.67	0.01
290	SLU 24	7	-333	3488	30.38	4.78	0.01
290	SLU 25	7	-333	3489	30.4	4.78	0.01
290	SLU 26	7	-329	3453	30.03	4.71	0.01
290	SLU 27	7	-333	3523	30.72	4.81	0.01
290	SLU 28	7	-334	3524	30.73	4.81	0.01
290	SLU 29	7	-328	3487	30.33	4.75	0.01
290	SLU 30	7	-329	3488	30.35	4.75	0.01
290	SLU 31	7	-369	3835	33.49	5.37	0.01
290	SLU 32	8	-374	3905	34.18	5.47	0.01
290	SLU 33	8	-374	3906	34.19	5.47	0.01
290	SLU 34	8	-370	3870	33.82	5.41	0.01
290	SLU 35	8	-375	3940	34.51	5.51	0.01
290	SLU 36	8	-375	3941	34.53	5.51	0.01
290	SLU 37	8	-370	3904	34.12	5.45	0.01
290	SLU 38	8	-370	3905	34.14	5.45	0.01
290	SLU 39	8	-387	4013	35.08	5.67	0.01
290	SLU 40	8	-387	4013	35.1	5.67	0.01
290	SLU 41	8	-387	4048	35.41	5.71	0.01
290	SLU 42	8	-387	4048	35.43	5.71	0.01
290	SLU 43	7	-354	3767	32.19	4.92	0.01
290	SLU 44	7	-354	3767	32.22	4.92	0.01
290	SLU 45	7	-359	3838	32.91	5.02	0.01
290	SLU 46	7	-359	3838	32.92	5.02	0.01
290	SLU 47	7	-354	3802	32.55	4.96	0.01
290	SLU 48	7	-359	3873	33.24	5.06	0.01
290	SLU 49	7	-359	3873	33.26	5.06	0.01
290	SLU 50	7	-354	3837	32.85	4.99	0.01
290	SLU 51	7	-354	3837	32.87	4.99	0.01
290	SLU 52	8	-395	4184	36.01	5.62	0.01
290	SLU 53	8	-400	4255	36.7	5.72	0.01
290	SLU 54	8	-400	4255	36.72	5.72	0.01
290	SLU 55	8	-396	4219	36.34	5.65	0.01

Nodo	Cont.	Reazione a traslazione			Reazione a rotazione		
Ind.	N.br.	x	y	z	x	y	z
290	SLU 56	8	-400	4290	37.03	5.76	0.01
290	SLU 57	8	-401	4290	37.05	5.76	0.01
290	SLU 58	8	-395	4254	36.64	5.69	0.01
290	SLU 59	8	-396	4254	36.66	5.69	0.01
290	SLU 60	8	-412	4362	37.61	5.92	0.01
290	SLU 61	8	-413	4363	37.62	5.91	0.01
290	SLU 62	8	-413	4397	37.94	5.95	0.01
290	SLU 63	8	-413	4398	37.96	5.95	0.01
290	SLU 64	8	-398	4178	36.07	5.62	0.01
290	SLU 65	8	-398	4178	36.1	5.62	0.01
290	SLU 66	8	-403	4249	36.79	5.73	0.01
290	SLU 67	8	-403	4249	36.81	5.73	0.01
290	SLU 68	8	-398	4214	36.43	5.66	0.01
290	SLU 69	8	-403	4284	37.12	5.76	0.01
290	SLU 70	8	-404	4284	37.14	5.76	0.01
290	SLU 71	8	-398	4248	36.73	5.7	0.01
290	SLU 72	8	-399	4248	36.75	5.7	0.01
290	SLU 73	9	-439	4595	39.89	6.32	0.01
290	SLU 74	9	-444	4666	40.58	6.42	0.01
290	SLU 75	9	-444	4666	40.6	6.42	0.01
290	SLU 76	9	-440	4631	40.22	6.36	0.01
290	SLU 77	9	-445	4701	40.91	6.46	0.01
290	SLU 78	9	-445	4701	40.93	6.46	0.01
290	SLU 79	9	-440	4665	40.53	6.4	0.01
290	SLU 80	9	-440	4665	40.54	6.4	0.01
290	SLU 81	9	-457	4774	41.49	6.62	0.01
290	SLU 82	9	-457	4774	41.51	6.62	0.01
290	SLU 83	9	-457	4809	41.82	6.66	0.01
290	SLU 84	9	-457	4809	41.84	6.66	0.01
290	SLE RA 1	6	-296	3123	26.89	4.17	0.01
290	SLE RA 2	6	-296	3124	26.91	4.17	0.01
290	SLE RA 3	6	-300	3171	27.37	4.24	0.01
290	SLE RA 4	6	-300	3171	27.38	4.24	0.01
290	SLE RA 5	6	-297	3147	27.13	4.2	0.01
290	SLE RA 6	6	-300	3194	27.59	4.26	0.01
290	SLE RA 7	6	-300	3194	27.6	4.26	0.01
290	SLE RA 8	6	-297	3170	27.34	4.22	0.01
290	SLE RA 9	6	-297	3170	27.35	4.22	0.01
290	SLE RA 10	6	-324	3402	29.44	4.63	0.01
290	SLE RA 11	7	-327	3449	29.9	4.7	0.01
290	SLE RA 12	7	-327	3449	29.91	4.7	0.01
290	SLE RA 13	7	-324	3425	29.66	4.66	0.01
290	SLE RA 14	7	-327	3472	30.12	4.73	0.01
290	SLE RA 15	7	-328	3472	30.13	4.73	0.01
290	SLE RA 16	7	-324	3448	29.86	4.69	0.01
290	SLE RA 17	7	-324	3448	29.88	4.69	0.01
290	SLE RA 18	7	-335	3520	30.51	4.83	0.01
290	SLE RA 19	7	-336	3521	30.52	4.83	0.01
290	SLE RA 20	7	-336	3544	30.73	4.86	0.01
290	SLE RA 21	7	-336	3544	30.74	4.86	0.01
290	SLE FR 1	6	-296	3123	26.89	4.17	0.01
290	SLE FR 2	6	-296	3123	26.9	4.17	0.01
290	SLE FR 3	6	-296	3133	26.98	4.18	0.01
290	SLE FR 4	6	-308	3243	27.98	4.37	0.01
290	SLE FR 5	6	-308	3252	28.07	4.38	0.01
290	SLE FR 6	6	-316	3322	28.7	4.5	0.01
290	SLE QP 1	6	-296	3123	26.89	4.17	0.01
290	SLE QP 2	6	-308	3243	27.98	4.37	0.01
290	SLD 1	9	-252	3516	25.45	6.34	0.01
290	SLD 2	9	-252	3516	25.45	6.34	0.01
290	SLD 3	10	-627	3592	42.77	7.65	0.01
290	SLD 4	10	-627	3592	42.77	7.65	0.01
290	SLD 5	5	278	3209	0.94	2.98	0
290	SLD 6	5	278	3209	0.94	2.98	0
290	SLD 7	9	-973	3463	58.69	7.33	0.01
290	SLD 8	9	-973	3463	58.69	7.33	0.01
290	SLD 9	3	357	3022	-2.74	1.41	0
290	SLD 10	3	357	3022	-2.74	1.41	0
290	SLD 11	7	-894	3276	55.01	5.76	0.01
290	SLD 12	7	-894	3276	55.01	5.76	0.01
290	SLD 13	2	11	2893	13.18	1.09	0
290	SLD 14	2	11	2893	13.18	1.09	0
290	SLD 15	4	-364	2969	30.51	2.4	0
290	SLD 16	4	-364	2969	30.51	2.4	0
290	SLV 1	12	-170	3893	21.63	8.9	0.01
290	SLV 2	12	-170	3893	21.63	8.9	0.01
290	SLV 3	15	-1056	4073	62.68	12.17	0.02
290	SLV 4	15	-1056	4073	62.68	12.17	0.02
290	SLV 5	3	1078	3166	-36.19	0.77	0
290	SLV 6	3	1078	3166	-36.19	0.77	0
290	SLV 7	14	-1877	3764	100.65	11.66	0.01
290	SLV 8	14	-1877	3764	100.65	11.66	0.01
290	SLV 9	-1	1261	2721	-44.69	-2.93	0
290	SLV 10	-1	1261	2721	-44.69	-2.93	0
290	SLV 11	9	-1694	3319	92.14	7.97	0.01
290	SLV 12	9	-1694	3319	92.14	7.97	0.01
290	SLV 13	-3	440	2412	-6.72	-3.43	0
290	SLV 14	-3	440	2412	-6.72	-3.43	0
290	SLV 15	0	-446	2592	34.33	-0.16	0
290	SLV 16	0	-446	2592	34.33	-0.16	0
291	SLU 1	13	-876	5416	42.4	4.92	-0.03

Nodo	Cont.	Reazione a traslazione			Reazione a rotazione		
Ind.	N.br.	x	y	z	x	y	z
291	SLU 2	13	-794	5231	38.54	4.97	-0.03
291	SLU 3	14	-905	5642	43.9	5.14	-0.03
291	SLU 4	13	-856	5531	41.58	5.18	-0.03
291	SLU 5	13	-812	5418	39.58	5.16	-0.03
291	SLU 6	14	-924	5829	44.93	5.33	-0.03
291	SLU 7	14	-874	5718	42.62	5.37	-0.03
291	SLU 8	14	-914	5790	44.47	5.3	-0.03
291	SLU 9	14	-864	5679	42.15	5.33	-0.03
291	SLU 10	14	-882	5869	43.03	5.56	-0.03
291	SLU 11	15	-993	6280	48.39	5.73	-0.03
291	SLU 12	15	-943	6169	46.07	5.76	-0.03
291	SLU 13	15	-900	6056	44.06	5.75	-0.03
291	SLU 14	16	-1012	6467	49.42	5.92	-0.04
291	SLU 15	15	-962	6356	47.1	5.95	-0.04
291	SLU 16	16	-1002	6428	48.96	5.88	-0.04
291	SLU 17	15	-952	6317	46.64	5.92	-0.04
291	SLU 18	15	-1002	6327	48.81	5.75	-0.04
291	SLU 19	15	-952	6216	46.5	5.79	-0.03
291	SLU 20	16	-1021	6514	49.85	5.94	-0.04
291	SLU 21	16	-971	6404	47.53	5.98	-0.04
291	SLU 22	15	-967	6064	47.01	5.52	-0.03
291	SLU 23	14	-884	5879	43.15	5.58	-0.03
291	SLU 24	15	-996	6290	48.51	5.75	-0.03
291	SLU 25	15	-946	6179	46.2	5.78	-0.03
291	SLU 26	15	-903	6066	44.19	5.77	-0.03
291	SLU 27	16	-1014	6477	49.55	5.94	-0.04
291	SLU 28	15	-965	6366	47.23	5.97	-0.04
291	SLU 29	16	-1004	6438	49.08	5.9	-0.04
291	SLU 30	15	-955	6327	46.77	5.93	-0.04
291	SLU 31	16	-972	6517	47.64	6.16	-0.04
291	SLU 32	17	-1084	6928	53	6.33	-0.04
291	SLU 33	17	-1034	6817	50.68	6.36	-0.04
291	SLU 34	16	-991	6704	48.68	6.35	-0.04
291	SLU 35	17	-1102	7115	54.03	6.52	-0.04
291	SLU 36	17	-1053	7004	51.72	6.55	-0.04
291	SLU 37	17	-1092	7076	53.57	6.49	-0.04
291	SLU 38	17	-1043	6965	51.26	6.52	-0.04
291	SLU 39	17	-1092	6975	53.43	6.36	-0.04
291	SLU 40	17	-1043	6864	51.11	6.39	-0.04
291	SLU 41	17	-1111	7162	54.46	6.55	-0.04
291	SLU 42	17	-1062	7052	52.14	6.58	-0.04
291	SLU 43	16	-1108	6818	53.54	6.19	-0.04
291	SLU 44	16	-1025	6633	49.68	6.24	-0.04
291	SLU 45	17	-1137	7044	55.04	6.41	-0.04
291	SLU 46	17	-1087	6933	52.72	6.45	-0.04
291	SLU 47	17	-1044	6820	50.71	6.43	-0.04
291	SLU 48	18	-1156	7231	56.07	6.6	-0.04
291	SLU 49	17	-1106	7120	53.76	6.64	-0.04
291	SLU 50	17	-1145	7192	55.61	6.57	-0.04
291	SLU 51	17	-1096	7082	53.29	6.6	-0.04
291	SLU 52	18	-1113	7272	54.17	6.83	-0.04
291	SLU 53	19	-1225	7682	59.53	7	-0.04
291	SLU 54	18	-1175	7571	57.21	7.03	-0.04
291	SLU 55	18	-1132	7459	55.2	7.02	-0.04
291	SLU 56	19	-1244	7869	60.56	7.19	-0.04
291	SLU 57	19	-1194	7759	58.24	7.22	-0.04
291	SLU 58	19	-1233	7831	60.1	7.15	-0.04
291	SLU 59	19	-1184	7720	57.78	7.18	-0.04
291	SLU 60	19	-1234	7730	59.95	7.02	-0.04
291	SLU 61	18	-1184	7619	57.63	7.05	-0.04
291	SLU 62	19	-1252	7917	60.99	7.21	-0.04
291	SLU 63	19	-1203	7806	58.67	7.24	-0.04
291	SLU 64	18	-1199	7466	58.15	6.79	-0.04
291	SLU 65	18	-1116	7281	54.29	6.85	-0.04
291	SLU 66	19	-1227	7692	59.65	7.02	-0.04
291	SLU 67	18	-1178	7581	57.33	7.05	-0.04
291	SLU 68	18	-1135	7469	55.33	7.03	-0.04
291	SLU 69	19	-1246	7879	60.69	7.21	-0.04
291	SLU 70	19	-1197	7768	58.37	7.24	-0.04
291	SLU 71	19	-1236	7840	60.22	7.17	-0.04
291	SLU 72	19	-1187	7730	57.91	7.2	-0.04
291	SLU 73	19	-1204	7920	58.78	7.43	-0.04
291	SLU 74	20	-1315	8330	64.14	7.6	-0.05
291	SLU 75	20	-1266	8219	61.82	7.63	-0.05
291	SLU 76	20	-1223	8107	59.82	7.62	-0.05
291	SLU 77	21	-1334	8517	65.17	7.79	-0.05
291	SLU 78	20	-1285	8407	62.86	7.82	-0.05
291	SLU 79	21	-1324	8479	64.71	7.75	-0.05
291	SLU 80	20	-1274	8368	62.39	7.79	-0.05
291	SLU 81	20	-1324	8378	64.56	7.63	-0.05
291	SLU 82	20	-1275	8267	62.25	7.66	-0.05
291	SLU 83	21	-1343	8565	65.6	7.82	-0.05
291	SLU 84	20	-1293	8454	63.28	7.85	-0.05
291	SLE RA 1	14	-902	5601	43.72	5.09	-0.03
291	SLE RA 2	13	-847	5478	41.15	5.13	-0.03
291	SLE RA 3	14	-921	5752	44.72	5.24	-0.03
291	SLE RA 4	14	-888	5678	43.17	5.26	-0.03
291	SLE RA 5	14	-860	5602	41.84	5.25	-0.03
291	SLE RA 6	14	-934	5876	45.41	5.37	-0.03
291	SLE RA 7	14	-901	5802	43.86	5.39	-0.03
291	SLE RA 8	14	-927	5850	45.1	5.34	-0.03

Nodo	Cont.	Reazione a traslazione			Reazione a rotazione		
Ind.	N.br.	x	y	z	x	y	z
291	SLE RA 9	14	-894	5776	43.55	5.37	-0.03
291	SLE RA 10	14	-906	5903	44.14	5.52	-0.03
291	SLE RA 11	15	-980	6177	47.71	5.63	-0.03
291	SLE RA 12	15	-947	6103	46.17	5.65	-0.03
291	SLE RA 13	15	-918	6028	44.83	5.64	-0.03
291	SLE RA 14	15	-992	6302	48.4	5.76	-0.03
291	SLE RA 15	15	-959	6228	46.86	5.78	-0.03
291	SLE RA 16	15	-986	6276	48.09	5.73	-0.03
291	SLE RA 17	15	-953	6202	46.55	5.76	-0.03
291	SLE RA 18	15	-986	6209	47.99	5.65	-0.03
291	SLE RA 19	15	-953	6135	46.45	5.67	-0.03
291	SLE RA 20	15	-998	6333	48.68	5.77	-0.04
291	SLE RA 21	15	-965	6259	47.14	5.8	-0.03
291	SLE FR 1	14	-902	5601	43.72	5.09	-0.03
291	SLE FR 2	13	-891	5576	43.2	5.1	-0.03
291	SLE FR 3	14	-907	5651	44	5.14	-0.03
291	SLE FR 4	14	-916	5759	44.49	5.27	-0.03
291	SLE FR 5	14	-932	5833	45.28	5.31	-0.03
291	SLE FR 6	14	-944	5905	45.86	5.37	-0.03
291	SLE QP 1	14	-902	5601	43.72	5.09	-0.03
291	SLE QP 2	14	-927	5783	45	5.26	-0.03
291	SLD 1	16	-887	7186	41.43	7.49	-0.04
291	SLD 2	16	-887	7186	41.43	7.49	-0.04
291	SLD 3	24	-1386	8361	64.76	11.92	-0.05
291	SLD 4	24	-1386	8361	64.76	11.92	-0.05
291	SLD 5	2	-159	4423	8.55	-0.79	-0.02
291	SLD 6	2	-159	4423	8.55	-0.79	-0.02
291	SLD 7	30	-1821	8338	86.31	13.98	-0.06
291	SLD 8	30	-1821	8338	86.31	13.98	-0.06
291	SLD 9	-2	-33	3229	3.69	-3.46	-0.01
291	SLD 10	-2	-33	3229	3.69	-3.46	-0.01
291	SLD 11	26	-1696	7143	81.45	11.31	-0.05
291	SLD 12	26	-1696	7143	81.45	11.31	-0.05
291	SLD 13	4	-468	3206	25.24	-1.4	-0.01
291	SLD 14	4	-468	3206	25.24	-1.4	-0.01
291	SLD 15	12	-967	4380	48.57	3.03	-0.02
291	SLD 16	12	-967	4380	48.57	3.03	-0.02
291	SLV 1	17	-841	8934	37.05	10.37	-0.06
291	SLV 2	17	-841	8934	37.05	10.37	-0.06
291	SLV 3	38	-2003	11688	91.42	21.61	-0.08
291	SLV 4	38	-2003	11688	91.42	21.61	-0.08
291	SLV 5	-17	862	2552	-39.85	-10.27	0.01
291	SLV 6	-17	862	2552	-39.85	-10.27	0.01
291	SLV 7	53	-3013	11731	141.4	27.22	-0.09
291	SLV 8	53	-3013	11731	141.4	27.22	-0.09
291	SLV 9	-25	1159	-164	-51.39	-16.71	0.03
291	SLV 10	-25	1159	-164	-51.39	-16.71	0.03
291	SLV 11	45	-2716	9014	129.86	20.78	-0.07
291	SLV 12	45	-2716	9014	129.86	20.78	-0.07
291	SLV 13	-10	149	-121	-1.42	-11.1	0.02
291	SLV 14	-10	149	-121	-1.42	-11.1	0.02
291	SLV 15	11	-1014	2632	52.95	0.15	-0.01
291	SLV 16	11	-1014	2632	52.95	0.15	-0.01
292	SLU 1	-3	-235	3180	10.99	-2.89	-0.01
292	SLU 2	-3	-235	3183	11	-2.89	-0.01
292	SLU 3	-3	-237	3260	11.13	-2.96	-0.01
292	SLU 4	-3	-237	3262	11.14	-2.96	-0.01
292	SLU 5	-3	-233	3225	10.93	-2.91	-0.01
292	SLU 6	-3	-235	3302	11.06	-2.99	-0.01
292	SLU 7	-3	-235	3304	11.06	-2.99	-0.01
292	SLU 8	-3	-230	3264	10.84	-2.94	-0.01
292	SLU 9	-3	-230	3266	10.85	-2.94	-0.01
292	SLU 10	-3	-272	3630	12.7	-3.42	-0.01
292	SLU 11	-3	-274	3707	12.83	-3.5	-0.01
292	SLU 12	-3	-274	3709	12.84	-3.5	-0.01
292	SLU 13	-3	-269	3672	12.63	-3.45	-0.01
292	SLU 14	-4	-272	3749	12.76	-3.53	-0.01
292	SLU 15	-4	-272	3750	12.76	-3.53	-0.01
292	SLU 16	-3	-267	3711	12.54	-3.48	-0.01
292	SLU 17	-3	-267	3712	12.55	-3.48	-0.01
292	SLU 18	-4	-287	3819	13.42	-3.66	-0.01
292	SLU 19	-4	-287	3820	13.43	-3.66	-0.01
292	SLU 20	-4	-285	3861	13.35	-3.68	-0.01
292	SLU 21	-4	-285	3862	13.35	-3.68	-0.01
292	SLU 22	-3	-274	3618	12.79	-3.42	-0.01
292	SLU 23	-3	-275	3621	12.8	-3.42	-0.01
292	SLU 24	-3	-277	3698	12.93	-3.5	-0.01
292	SLU 25	-3	-277	3699	12.94	-3.5	-0.01
292	SLU 26	-3	-272	3662	12.73	-3.45	-0.01
292	SLU 27	-4	-274	3740	12.86	-3.53	-0.01
292	SLU 28	-4	-275	3741	12.86	-3.53	-0.01
292	SLU 29	-3	-270	3702	12.64	-3.48	-0.01
292	SLU 30	-3	-270	3703	12.65	-3.48	-0.01
292	SLU 31	-4	-311	4067	14.5	-3.96	-0.01
292	SLU 32	-4	-314	4145	14.63	-4.04	-0.01
292	SLU 33	-4	-314	4146	14.64	-4.04	-0.01
292	SLU 34	-4	-309	4109	14.43	-3.99	-0.01
292	SLU 35	-4	-311	4186	14.56	-4.07	-0.01
292	SLU 36	-4	-311	4188	14.56	-4.06	-0.01
292	SLU 37	-4	-306	4148	14.34	-4.02	-0.01
292	SLU 38	-4	-306	4150	14.35	-4.02	-0.01

Nodo	Cont.	Reazione a traslazione			Reazione a rotazione		
Ind.	N.br.	x	y	z	x	y	z
292	SLU 39	-4	-327	4256	15.22	-4.19	-0.01
292	SLU 40	-4	-327	4258	15.23	-4.19	-0.01
292	SLU 41	-4	-324	4298	15.15	-4.22	-0.01
292	SLU 42	-4	-325	4300	15.15	-4.22	-0.01
292	SLU 43	-4	-292	3984	13.67	-3.57	-0.01
292	SLU 44	-4	-292	3987	13.68	-3.57	-0.01
292	SLU 45	-4	-294	4064	13.81	-3.65	-0.01
292	SLU 46	-4	-294	4066	13.82	-3.65	-0.01
292	SLU 47	-4	-290	4029	13.61	-3.6	-0.01
292	SLU 48	-4	-292	4106	13.74	-3.67	-0.01
292	SLU 49	-4	-292	4108	13.74	-3.67	-0.01
292	SLU 50	-4	-287	4068	13.52	-3.62	-0.01
292	SLU 51	-4	-287	4070	13.53	-3.62	-0.01
292	SLU 52	-4	-329	4434	15.38	-4.11	-0.01
292	SLU 53	-4	-331	4511	15.51	-4.18	-0.01
292	SLU 54	-4	-331	4513	15.52	-4.18	-0.01
292	SLU 55	-4	-326	4476	15.31	-4.13	-0.01
292	SLU 56	-4	-329	4553	15.44	-4.21	-0.01
292	SLU 57	-4	-329	4555	15.44	-4.21	-0.01
292	SLU 58	-4	-324	4515	15.22	-4.16	-0.01
292	SLU 59	-4	-324	4517	15.23	-4.16	-0.01
292	SLU 60	-4	-344	4623	16.1	-4.34	-0.01
292	SLU 61	-4	-344	4624	16.11	-4.34	-0.01
292	SLU 62	-4	-342	4665	16.03	-4.37	-0.01
292	SLU 63	-4	-342	4666	16.03	-4.37	-0.01
292	SLU 64	-4	-331	4422	15.47	-4.11	-0.01
292	SLU 65	-4	-332	4425	15.48	-4.11	-0.01
292	SLU 66	-4	-334	4502	15.61	-4.18	-0.01
292	SLU 67	-4	-334	4503	15.62	-4.18	-0.01
292	SLU 68	-4	-329	4467	15.41	-4.13	-0.01
292	SLU 69	-4	-331	4544	15.54	-4.21	-0.01
292	SLU 70	-4	-331	4545	15.54	-4.21	-0.01
292	SLU 71	-4	-327	4506	15.32	-4.16	-0.01
292	SLU 72	-4	-327	4507	15.33	-4.16	-0.01
292	SLU 73	-5	-368	4872	17.18	-4.64	-0.01
292	SLU 74	-5	-371	4949	17.31	-4.72	-0.01
292	SLU 75	-5	-371	4950	17.32	-4.72	-0.01
292	SLU 76	-5	-366	4913	17.11	-4.67	-0.01
292	SLU 77	-5	-368	4991	17.24	-4.75	-0.01
292	SLU 78	-5	-368	4992	17.24	-4.75	-0.01
292	SLU 79	-5	-363	4953	17.02	-4.7	-0.01
292	SLU 80	-5	-363	4954	17.03	-4.7	-0.01
292	SLU 81	-5	-384	5060	17.9	-4.88	-0.01
292	SLU 82	-5	-384	5062	17.91	-4.88	-0.01
292	SLU 83	-5	-381	5102	17.83	-4.9	-0.01
292	SLU 84	-5	-381	5104	17.83	-4.9	-0.01
292	SLE RA 1	-3	-246	3305	11.51	-3.04	-0.01
292	SLE RA 2	-3	-246	3307	11.51	-3.04	-0.01
292	SLE RA 3	-3	-248	3359	11.6	-3.09	-0.01
292	SLE RA 4	-3	-248	3360	11.6	-3.09	-0.01
292	SLE RA 5	-3	-245	3335	11.46	-3.06	-0.01
292	SLE RA 6	-3	-246	3386	11.55	-3.11	-0.01
292	SLE RA 7	-3	-246	3388	11.55	-3.11	-0.01
292	SLE RA 8	-3	-243	3361	11.41	-3.08	-0.01
292	SLE RA 9	-3	-243	3362	11.41	-3.08	-0.01
292	SLE RA 10	-3	-271	3605	12.65	-3.4	-0.01
292	SLE RA 11	-3	-272	3657	12.73	-3.45	-0.01
292	SLE RA 12	-3	-272	3658	12.74	-3.45	-0.01
292	SLE RA 13	-3	-269	3633	12.6	-3.42	-0.01
292	SLE RA 14	-3	-271	3684	12.68	-3.47	-0.01
292	SLE RA 15	-3	-271	3685	12.69	-3.47	-0.01
292	SLE RA 16	-3	-267	3659	12.54	-3.44	-0.01
292	SLE RA 17	-3	-268	3660	12.54	-3.44	-0.01
292	SLE RA 18	-4	-281	3731	13.13	-3.55	-0.01
292	SLE RA 19	-4	-281	3732	13.13	-3.55	-0.01
292	SLE RA 20	-4	-280	3759	13.08	-3.57	-0.01
292	SLE RA 21	-4	-280	3760	13.08	-3.57	-0.01
292	SLE FR 1	-3	-246	3305	11.51	-3.04	-0.01
292	SLE FR 2	-3	-246	3306	11.51	-3.04	-0.01
292	SLE FR 3	-3	-246	3317	11.49	-3.05	-0.01
292	SLE FR 4	-3	-257	3433	11.99	-3.19	-0.01
292	SLE FR 5	-3	-256	3444	11.97	-3.2	-0.01
292	SLE FR 6	-3	-264	3518	12.32	-3.3	-0.01
292	SLE QP 1	-3	-246	3305	11.51	-3.04	-0.01
292	SLE QP 2	-3	-257	3433	11.99	-3.2	-0.01
292	SLD 1	-1	88	3055	-3.16	-0.92	-0.01
292	SLD 2	-1	88	3055	-3.16	-0.92	-0.01
292	SLD 3	-2	-370	3246	17.2	-2.07	0
292	SLD 4	-2	-370	3246	17.2	-2.07	0
292	SLD 5	0	541	3030	-23.44	-0.76	-0.01
292	SLD 6	0	541	3030	-23.44	-0.76	-0.01
292	SLD 7	-5	-985	3667	44.45	-4.61	0
292	SLD 8	-5	-985	3667	44.45	-4.61	0
292	SLD 9	-1	472	3200	-20.46	-1.78	-0.01
292	SLD 10	-1	472	3200	-20.46	-1.78	-0.01
292	SLD 11	-6	-1055	3836	47.43	-5.63	-0.01
292	SLD 12	-6	-1055	3836	47.43	-5.63	-0.01
292	SLD 13	-4	-143	3621	6.78	-4.32	-0.02
292	SLD 14	-4	-143	3621	6.78	-4.32	-0.02
292	SLD 15	-5	-601	3812	27.15	-5.47	-0.01
292	SLD 16	-5	-601	3812	27.15	-5.47	-0.01

Nodo	Cont.	Reazione a traslazione			Reazione a rotazione		
Ind.	N.br.	x	y	z	x	y	z
292	SLV 1	2	554	2535	-23.67	2.29	0
292	SLV 2	2	554	2535	-23.67	2.29	0
292	SLV 3	-1	-525	2989	24.32	-0.64	0.01
292	SLV 4	-1	-525	2989	24.32	-0.64	0.01
292	SLV 5	4	1621	2474	-71.49	2.88	-0.01
292	SLV 6	4	1621	2474	-71.49	2.88	-0.01
292	SLV 7	-8	-1972	3990	88.47	-6.86	0
292	SLV 8	-8	-1972	3990	88.47	-6.86	0
292	SLV 9	1	1459	2877	-64.49	0.47	-0.02
292	SLV 10	1	1459	2877	-64.49	0.47	-0.02
292	SLV 11	-10	-2135	4392	95.47	-9.27	0
292	SLV 12	-10	-2135	4392	95.47	-9.27	0
292	SLV 13	-5	11	3877	-0.33	-5.75	-0.02
292	SLV 14	-5	11	3877	-0.33	-5.75	-0.02
292	SLV 15	-9	-1067	4331	47.66	-8.68	-0.02
292	SLV 16	-9	-1067	4331	47.66	-8.68	-0.02
293	SLU 1	-9	-866	4799	39.5	-1.54	0.03
293	SLU 2	-9	-767	4646	35.07	-1.73	0.03
293	SLU 3	-9	-897	4993	40.96	-1.61	0.03
293	SLU 4	-9	-837	4901	38.29	-1.73	0.03
293	SLU 5	-9	-788	4806	36.12	-1.8	0.03
293	SLU 6	-10	-918	5153	42.01	-1.68	0.04
293	SLU 7	-10	-859	5061	39.35	-1.8	0.04
293	SLU 8	-10	-909	5119	41.61	-1.67	0.03
293	SLU 9	-9	-850	5027	38.95	-1.79	0.03
293	SLU 10	-10	-858	5193	39.34	-1.9	0.04
293	SLU 11	-10	-988	5541	45.23	-1.78	0.04
293	SLU 12	-10	-928	5449	42.57	-1.9	0.04
293	SLU 13	-10	-879	5353	40.4	-1.97	0.04
293	SLU 14	-11	-1009	5701	46.29	-1.85	0.04
293	SLU 15	-11	-950	5609	43.63	-1.97	0.04
293	SLU 16	-11	-1000	5667	45.89	-1.84	0.04
293	SLU 17	-10	-941	5575	43.23	-1.96	0.04
293	SLU 18	-10	-996	5582	45.62	-1.78	0.04
293	SLU 19	-10	-937	5489	42.95	-1.9	0.04
293	SLU 20	-11	-1018	5742	46.67	-1.85	0.04
293	SLU 21	-11	-958	5649	44.01	-1.96	0.04
293	SLU 22	-10	-960	5351	43.89	-1.72	0.04
293	SLU 23	-10	-861	5197	39.46	-1.91	0.04
293	SLU 24	-10	-991	5545	45.35	-1.79	0.04
293	SLU 25	-10	-931	5453	42.68	-1.91	0.04
293	SLU 26	-10	-882	5357	40.51	-1.98	0.04
293	SLU 27	-11	-1012	5705	46.4	-1.86	0.04
293	SLU 28	-11	-952	5613	43.74	-1.98	0.04
293	SLU 29	-11	-1003	5671	46	-1.85	0.04
293	SLU 30	-10	-943	5579	43.34	-1.97	0.04
293	SLU 31	-11	-952	5745	43.73	-2.08	0.04
293	SLU 32	-11	-1082	6093	49.62	-1.96	0.04
293	SLU 33	-11	-1022	6001	46.96	-2.08	0.04
293	SLU 34	-11	-973	5905	44.79	-2.15	0.04
293	SLU 35	-12	-1103	6253	50.68	-2.03	0.04
293	SLU 36	-12	-1043	6161	48.02	-2.15	0.04
293	SLU 37	-12	-1094	6219	50.28	-2.02	0.04
293	SLU 38	-11	-1034	6126	47.62	-2.14	0.04
293	SLU 39	-11	-1090	6133	50.01	-1.96	0.04
293	SLU 40	-11	-1030	6041	47.34	-2.07	0.04
293	SLU 41	-12	-1111	6293	51.06	-2.03	0.04
293	SLU 42	-12	-1052	6201	48.4	-2.14	0.04
293	SLU 43	-11	-1094	6050	49.85	-1.94	0.04
293	SLU 44	-11	-995	5896	45.41	-2.13	0.04
293	SLU 45	-12	-1125	6244	51.3	-2.01	0.04
293	SLU 46	-12	-1065	6152	48.64	-2.13	0.04
293	SLU 47	-11	-1016	6056	46.47	-2.2	0.04
293	SLU 48	-12	-1146	6404	52.36	-2.08	0.04
293	SLU 49	-12	-1087	6312	49.69	-2.2	0.04
293	SLU 50	-12	-1137	6370	51.96	-2.08	0.04
293	SLU 51	-12	-1078	6278	49.3	-2.19	0.04
293	SLU 52	-12	-1086	6444	49.69	-2.3	0.05
293	SLU 53	-13	-1216	6792	55.58	-2.18	0.05
293	SLU 54	-13	-1156	6700	52.92	-2.3	0.05
293	SLU 55	-12	-1107	6604	50.74	-2.37	0.05
293	SLU 56	-13	-1237	6952	56.63	-2.25	0.05
293	SLU 57	-13	-1177	6860	53.97	-2.37	0.05
293	SLU 58	-13	-1228	6918	56.24	-2.24	0.05
293	SLU 59	-13	-1168	6825	53.57	-2.36	0.05
293	SLU 60	-13	-1224	6832	55.96	-2.18	0.05
293	SLU 61	-13	-1164	6740	53.3	-2.3	0.05
293	SLU 62	-13	-1246	6992	57.02	-2.25	0.05
293	SLU 63	-13	-1186	6900	54.35	-2.37	0.05
293	SLU 64	-12	-1188	6602	54.24	-2.12	0.05
293	SLU 65	-12	-1088	6448	49.8	-2.31	0.05
293	SLU 66	-13	-1218	6796	55.69	-2.19	0.05
293	SLU 67	-13	-1159	6704	53.03	-2.31	0.05
293	SLU 68	-12	-1110	6608	50.86	-2.38	0.05
293	SLU 69	-13	-1240	6956	56.75	-2.26	0.05
293	SLU 70	-13	-1180	6864	54.08	-2.38	0.05
293	SLU 71	-13	-1231	6922	56.35	-2.25	0.05
293	SLU 72	-13	-1171	6829	53.69	-2.37	0.05
293	SLU 73	-13	-1179	6996	54.08	-2.48	0.05
293	SLU 74	-14	-1309	7343	59.97	-2.36	0.05
293	SLU 75	-14	-1250	7251	57.31	-2.48	0.05

Nodo	Cont.	Reazione a traslazione			Reazione a rotazione		
Ind.	N.br.	x	y	z	x	y	z
293	SLU 76	-13	-1201	7156	55.13	-2.55	0.05
293	SLU 77	-14	-1331	7503	61.02	-2.43	0.05
293	SLU 78	-14	-1271	7411	58.36	-2.55	0.05
293	SLU 79	-14	-1322	7469	60.63	-2.42	0.05
293	SLU 80	-14	-1262	7377	57.97	-2.54	0.05
293	SLU 81	-14	-1318	7384	60.35	-2.36	0.05
293	SLU 82	-14	-1258	7292	57.69	-2.47	0.05
293	SLU 83	-14	-1339	7544	61.41	-2.43	0.05
293	SLU 84	-14	-1280	7452	58.74	-2.54	0.05
293	SLE RA 1	-9	-893	4957	40.76	-1.59	0.03
293	SLE RA 2	-9	-827	4855	37.8	-1.72	0.03
293	SLE RA 3	-9	-914	5086	41.73	-1.64	0.03
293	SLE RA 4	-9	-874	5025	39.95	-1.72	0.03
293	SLE RA 5	-9	-841	4961	38.5	-1.76	0.03
293	SLE RA 6	-10	-928	5193	42.43	-1.69	0.04
293	SLE RA 7	-10	-888	5132	40.65	-1.76	0.04
293	SLE RA 8	-10	-922	5170	42.17	-1.68	0.04
293	SLE RA 9	-10	-882	5109	40.39	-1.76	0.04
293	SLE RA 10	-10	-888	5220	40.65	-1.83	0.04
293	SLE RA 11	-10	-974	5451	44.58	-1.75	0.04
293	SLE RA 12	-10	-934	5390	42.8	-1.83	0.04
293	SLE RA 13	-10	-902	5326	41.35	-1.88	0.04
293	SLE RA 14	-10	-988	5558	45.28	-1.8	0.04
293	SLE RA 15	-10	-949	5497	43.51	-1.88	0.04
293	SLE RA 16	-10	-982	5535	45.02	-1.79	0.04
293	SLE RA 17	-10	-943	5474	43.24	-1.87	0.04
293	SLE RA 18	-10	-980	5479	44.83	-1.75	0.04
293	SLE RA 19	-10	-940	5417	43.06	-1.83	0.04
293	SLE RA 20	-10	-994	5585	45.54	-1.8	0.04
293	SLE RA 21	-10	-954	5524	43.76	-1.87	0.04
293	SLE FR 1	-9	-893	4957	40.76	-1.59	0.03
293	SLE FR 2	-9	-880	4936	40.17	-1.61	0.03
293	SLE FR 3	-9	-899	5000	41.04	-1.61	0.03
293	SLE FR 4	-10	-906	5093	41.39	-1.66	0.03
293	SLE FR 5	-10	-925	5156	42.26	-1.66	0.04
293	SLE FR 6	-10	-936	5218	42.8	-1.67	0.04
293	SLE QP 1	-9	-893	4957	40.76	-1.59	0.03
293	SLE QP 2	-10	-919	5113	41.98	-1.64	0.03
293	SLD 1	1	-490	2485	21.61	0.43	0.01
293	SLD 2	1	-490	2485	21.61	0.43	0.01
293	SLD 3	-9	-1041	3610	46.68	4.77	0.02
293	SLD 4	-9	-1041	3610	46.68	4.77	0.02
293	SLD 5	9	44	2619	-2.16	-7.6	0.01
293	SLD 6	9	44	2619	-2.16	-7.6	0.01
293	SLD 7	-25	-1790	6369	81.42	6.87	0.05
293	SLD 8	-25	-1790	6369	81.42	6.87	0.05
293	SLD 9	6	-48	3858	2.54	-10.14	0.02
293	SLD 10	6	-48	3858	2.54	-10.14	0.02
293	SLD 11	-28	-1883	7608	86.12	4.32	0.06
293	SLD 12	-28	-1883	7608	86.12	4.32	0.06
293	SLD 13	-10	-798	6617	37.28	-8.05	0.05
293	SLD 14	-10	-798	6617	37.28	-8.05	0.05
293	SLD 15	-20	-1348	7742	62.35	-3.71	0.06
293	SLD 16	-20	-1348	7742	62.35	-3.71	0.06
293	SLV 1	17	88	-894	-5.56	2.99	-0.03
293	SLV 2	17	88	-894	-5.56	2.99	-0.03
293	SLV 3	-9	-1195	1745	52.89	14.11	0
293	SLV 4	-9	-1195	1745	52.89	14.11	0
293	SLV 5	38	1328	-692	-60.93	-17.11	-0.03
293	SLV 6	38	1328	-692	-60.93	-17.11	-0.03
293	SLV 7	-49	-2947	8106	133.9	19.95	0.07
293	SLV 8	-49	-2947	8106	133.9	19.95	0.07
293	SLV 9	30	1109	2121	-49.94	-23.23	0
293	SLV 10	30	1109	2121	-49.94	-23.23	0
293	SLV 11	-57	-3167	10919	144.89	13.84	0.1
293	SLV 12	-57	-3167	10919	144.89	13.84	0.1
293	SLV 13	-10	-644	8482	31.07	-17.38	0.07
293	SLV 14	-10	-644	8482	31.07	-17.38	0.07
293	SLV 15	-36	-1926	11121	89.52	-6.26	0.1
293	SLV 16	-36	-1926	11121	89.52	-6.26	0.1
294	SLU 1	-6	-62	3031	4.03	0.75	0.03
294	SLU 2	-6	-66	3037	4.25	0.75	0.03
294	SLU 3	-7	-65	3093	4.17	0.8	0.03
294	SLU 4	-7	-67	3096	4.3	0.79	0.03
294	SLU 5	-6	-68	3064	4.33	0.78	0.03
294	SLU 6	-7	-67	3119	4.26	0.83	0.03
294	SLU 7	-7	-69	3123	4.39	0.82	0.03
294	SLU 8	-7	-66	3084	4.2	0.82	0.03
294	SLU 9	-7	-68	3088	4.34	0.81	0.03
294	SLU 10	-7	-67	3448	4.51	0.85	0.03
294	SLU 11	-7	-65	3503	4.43	0.9	0.03
294	SLU 12	-7	-68	3507	4.57	0.9	0.03
294	SLU 13	-7	-69	3475	4.6	0.88	0.03
294	SLU 14	-8	-67	3530	4.52	0.93	0.03
294	SLU 15	-8	-70	3534	4.65	0.93	0.03
294	SLU 16	-7	-67	3495	4.47	0.92	0.03
294	SLU 17	-7	-69	3499	4.6	0.92	0.03
294	SLU 18	-8	-63	3617	4.4	0.91	0.03
294	SLU 19	-8	-66	3621	4.54	0.9	0.03
294	SLU 20	-8	-65	3644	4.49	0.94	0.03
294	SLU 21	-8	-68	3648	4.62	0.93	0.03

Nodo	Cont.	Reazione a traslazione			Reazione a rotazione		
Ind.	N.br.	x	y	z	x	y	z
294	SLU 22	-7	-64	3414	4.33	0.87	0.03
294	SLU 23	-7	-69	3420	4.55	0.86	0.03
294	SLU 24	-7	-67	3476	4.48	0.91	0.03
294	SLU 25	-7	-69	3480	4.61	0.9	0.03
294	SLU 26	-7	-70	3447	4.64	0.89	0.03
294	SLU 27	-8	-69	3503	4.57	0.94	0.03
294	SLU 28	-7	-71	3507	4.7	0.94	0.03
294	SLU 29	-7	-68	3468	4.51	0.93	0.03
294	SLU 30	-7	-71	3471	4.64	0.93	0.03
294	SLU 31	-8	-69	3831	4.82	0.97	0.03
294	SLU 32	-8	-68	3887	4.74	1.01	0.04
294	SLU 33	-8	-70	3890	4.87	1.01	0.04
294	SLU 34	-8	-71	3858	4.91	1	0.04
294	SLU 35	-8	-69	3914	4.83	1.05	0.04
294	SLU 36	-8	-72	3917	4.96	1.04	0.04
294	SLU 37	-8	-69	3878	4.78	1.04	0.04
294	SLU 38	-8	-71	3882	4.91	1.03	0.04
294	SLU 39	-9	-65	4001	4.71	1.02	0.04
294	SLU 40	-9	-68	4005	4.84	1.01	0.04
294	SLU 41	-9	-67	4028	4.8	1.05	0.04
294	SLU 42	-9	-70	4031	4.93	1.05	0.04
294	SLU 43	-8	-80	3808	5.13	0.94	0.03
294	SLU 44	-8	-84	3815	5.35	0.93	0.03
294	SLU 45	-8	-83	3870	5.27	0.98	0.03
294	SLU 46	-8	-85	3874	5.4	0.98	0.03
294	SLU 47	-8	-86	3842	5.44	0.97	0.03
294	SLU 48	-8	-85	3897	5.36	1.01	0.04
294	SLU 49	-8	-87	3901	5.49	1.01	0.04
294	SLU 50	-8	-84	3862	5.31	1	0.03
294	SLU 51	-8	-86	3866	5.44	1	0.03
294	SLU 52	-9	-85	4226	5.61	1.04	0.04
294	SLU 53	-9	-83	4281	5.54	1.09	0.04
294	SLU 54	-9	-86	4285	5.67	1.08	0.04
294	SLU 55	-9	-87	4252	5.7	1.07	0.04
294	SLU 56	-9	-85	4308	5.62	1.12	0.04
294	SLU 57	-9	-88	4312	5.76	1.11	0.04
294	SLU 58	-9	-84	4273	5.57	1.11	0.04
294	SLU 59	-9	-87	4277	5.7	1.11	0.04
294	SLU 60	-9	-81	4395	5.51	1.09	0.04
294	SLU 61	-9	-84	4399	5.64	1.09	0.04
294	SLU 62	-9	-83	4422	5.6	1.12	0.04
294	SLU 63	-9	-85	4426	5.73	1.12	0.04
294	SLU 64	-9	-82	4192	5.44	1.06	0.04
294	SLU 65	-9	-87	4198	5.66	1.05	0.04
294	SLU 66	-9	-85	4254	5.58	1.1	0.04
294	SLU 67	-9	-87	4257	5.71	1.09	0.04
294	SLU 68	-9	-88	4225	5.74	1.08	0.04
294	SLU 69	-9	-87	4281	5.67	1.13	0.04
294	SLU 70	-9	-89	4284	5.8	1.12	0.04
294	SLU 71	-9	-86	4245	5.61	1.12	0.04
294	SLU 72	-9	-88	4249	5.75	1.11	0.04
294	SLU 73	-10	-87	4609	5.92	1.15	0.04
294	SLU 74	-10	-86	4664	5.84	1.2	0.04
294	SLU 75	-10	-88	4668	5.98	1.2	0.04
294	SLU 76	-10	-89	4636	6.01	1.18	0.04
294	SLU 77	-10	-87	4691	5.93	1.23	0.04
294	SLU 78	-10	-90	4695	6.06	1.23	0.04
294	SLU 79	-10	-87	4656	5.88	1.22	0.04
294	SLU 80	-10	-89	4660	6.01	1.22	0.04
294	SLU 81	-10	-83	4778	5.81	1.21	0.04
294	SLU 82	-10	-86	4782	5.95	1.2	0.04
294	SLU 83	-10	-85	4805	5.9	1.24	0.04
294	SLU 84	-10	-88	4809	6.03	1.23	0.04
294	SLE RA 1	-7	-63	3140	4.11	0.79	0.03
294	SLE RA 2	-7	-66	3144	4.26	0.78	0.03
294	SLE RA 3	-7	-65	3181	4.21	0.81	0.03
294	SLE RA 4	-7	-66	3184	4.3	0.81	0.03
294	SLE RA 5	-7	-67	3162	4.32	0.8	0.03
294	SLE RA 6	-7	-66	3199	4.27	0.84	0.03
294	SLE RA 7	-7	-67	3202	4.36	0.83	0.03
294	SLE RA 8	-7	-65	3176	4.23	0.83	0.03
294	SLE RA 9	-7	-67	3178	4.32	0.83	0.03
294	SLE RA 10	-7	-66	3418	4.44	0.85	0.03
294	SLE RA 11	-7	-65	3455	4.39	0.88	0.03
294	SLE RA 12	-7	-67	3458	4.47	0.88	0.03
294	SLE RA 13	-7	-67	3436	4.5	0.87	0.03
294	SLE RA 14	-7	-66	3473	4.44	0.91	0.03
294	SLE RA 15	-7	-68	3476	4.53	0.9	0.03
294	SLE RA 16	-7	-66	3450	4.41	0.9	0.03
294	SLE RA 17	-7	-67	3452	4.5	0.9	0.03
294	SLE RA 18	-8	-64	3531	4.37	0.89	0.03
294	SLE RA 19	-8	-65	3534	4.45	0.88	0.03
294	SLE RA 20	-8	-65	3549	4.43	0.91	0.03
294	SLE RA 21	-8	-66	3552	4.51	0.91	0.03
294	SLE FR 1	-7	-63	3140	4.11	0.79	0.03
294	SLE FR 2	-7	-63	3141	4.14	0.79	0.03
294	SLE FR 3	-7	-63	3147	4.14	0.8	0.03
294	SLE FR 4	-7	-64	3258	4.22	0.82	0.03
294	SLE FR 5	-7	-64	3265	4.21	0.83	0.03
294	SLE FR 6	-7	-63	3336	4.24	0.84	0.03
294	SLE QP 1	-7	-63	3140	4.11	0.79	0.03

Nodo	Cont.	Reazione a traslazione			Reazione a rotazione		
Ind.	N.br.	x	y	z	x	y	z
294	SLE QP 2	-7	-63	3257	4.19	0.82	0.03
294	SLD 1	-5	-68	2645	4.4	1.37	0.02
294	SLD 2	-5	-68	2645	4.4	1.37	0.02
294	SLD 3	-6	-410	3169	21.55	1.61	0.03
294	SLD 4	-6	-410	3169	21.55	1.61	0.03
294	SLD 5	-5	454	2279	-21.75	0.61	0.02
294	SLD 6	-5	454	2279	-21.75	0.61	0.02
294	SLD 7	-8	-686	4025	35.4	1.42	0.04
294	SLD 8	-8	-686	4025	35.4	1.42	0.04
294	SLD 9	-6	560	2490	-27.02	0.21	0.02
294	SLD 10	-6	560	2490	-27.02	0.21	0.02
294	SLD 11	-9	-580	4236	30.13	1.02	0.04
294	SLD 12	-9	-580	4236	30.13	1.02	0.04
294	SLD 13	-8	284	3346	-13.17	0.02	0.03
294	SLD 14	-8	284	3346	-13.17	0.02	0.03
294	SLD 15	-9	-58	3870	3.98	0.27	0.04
294	SLD 16	-9	-58	3870	3.98	0.27	0.04
294	SLV 1	-2	-75	1824	4.66	2.05	0.01
294	SLV 2	-2	-75	1824	4.66	2.05	0.01
294	SLV 3	-4	-880	3064	45.03	2.66	0.03
294	SLV 4	-4	-880	3064	45.03	2.66	0.03
294	SLV 5	-1	1154	947	-56.89	0.27	0
294	SLV 6	-1	1154	947	-56.89	0.27	0
294	SLV 7	-10	-1529	5080	77.66	2.29	0.05
294	SLV 8	-10	-1529	5080	77.66	2.29	0.05
294	SLV 9	-4	1403	1435	-69.28	-0.65	0.01
294	SLV 10	-4	1403	1435	-69.28	-0.65	0.01
294	SLV 11	-12	-1280	5568	65.27	1.37	0.06
294	SLV 12	-12	-1280	5568	65.27	1.37	0.06
294	SLV 13	-10	754	3451	-36.65	-1.02	0.03
294	SLV 14	-10	754	3451	-36.65	-1.02	0.03
294	SLV 15	-12	-51	4691	3.72	-0.42	0.05
294	SLV 16	-12	-51	4691	3.72	-0.42	0.05
295	SLU 1	8	-350	3352	21.83	5.68	0.03
295	SLU 2	8	-356	3380	22.29	5.62	0.03
295	SLU 3	8	-364	3456	22.72	5.88	0.03
295	SLU 4	8	-367	3473	22.99	5.85	0.03
295	SLU 5	8	-366	3451	22.96	5.75	0.03
295	SLU 6	8	-375	3527	23.39	6	0.03
295	SLU 7	8	-378	3544	23.66	5.97	0.03
295	SLU 8	8	-372	3494	23.18	5.93	0.03
295	SLU 9	8	-375	3511	23.45	5.89	0.03
295	SLU 10	9	-398	3804	25.07	6.48	0.03
295	SLU 11	9	-406	3880	25.49	6.73	0.03
295	SLU 12	9	-409	3896	25.77	6.7	0.03
295	SLU 13	9	-408	3874	25.74	6.6	0.03
295	SLU 14	10	-417	3950	26.17	6.86	0.03
295	SLU 15	10	-420	3967	26.44	6.82	0.03
295	SLU 16	10	-414	3917	25.96	6.78	0.03
295	SLU 17	9	-417	3934	26.23	6.75	0.03
295	SLU 18	10	-410	3957	25.8	6.9	0.03
295	SLU 19	10	-414	3974	26.07	6.87	0.03
295	SLU 20	10	-421	4028	26.47	7.02	0.04
295	SLU 21	10	-424	4045	26.75	6.99	0.04
295	SLU 22	9	-394	3767	24.66	6.53	0.03
295	SLU 23	9	-399	3794	25.12	6.48	0.03
295	SLU 24	9	-408	3870	25.55	6.73	0.03
295	SLU 25	9	-411	3887	25.82	6.7	0.03
295	SLU 26	9	-410	3865	25.79	6.6	0.03
295	SLU 27	10	-418	3941	26.22	6.86	0.04
295	SLU 28	10	-422	3958	26.49	6.82	0.03
295	SLU 29	10	-415	3908	26.01	6.78	0.03
295	SLU 30	9	-418	3925	26.28	6.75	0.03
295	SLU 31	10	-441	4218	27.89	7.33	0.04
295	SLU 32	11	-450	4294	28.32	7.59	0.04
295	SLU 33	11	-453	4311	28.6	7.55	0.04
295	SLU 34	10	-452	4289	28.57	7.45	0.04
295	SLU 35	11	-460	4364	29	7.71	0.04
295	SLU 36	11	-464	4381	29.27	7.68	0.04
295	SLU 37	11	-457	4331	28.79	7.63	0.04
295	SLU 38	11	-460	4348	29.06	7.6	0.04
295	SLU 39	11	-454	4371	28.63	7.75	0.04
295	SLU 40	11	-457	4388	28.9	7.72	0.04
295	SLU 41	11	-464	4442	29.3	7.88	0.04
295	SLU 42	11	-468	4459	29.58	7.84	0.04
295	SLU 43	10	-441	4216	27.41	7.09	0.04
295	SLU 44	10	-446	4244	27.87	7.03	0.04
295	SLU 45	10	-455	4320	28.3	7.29	0.04
295	SLU 46	10	-458	4337	28.57	7.26	0.04
295	SLU 47	10	-457	4315	28.54	7.16	0.04
295	SLU 48	10	-465	4391	28.97	7.41	0.04
295	SLU 49	10	-468	4407	29.24	7.38	0.04
295	SLU 50	10	-462	4358	28.76	7.34	0.04
295	SLU 51	10	-465	4374	29.03	7.3	0.04
295	SLU 52	11	-488	4667	30.65	7.89	0.04
295	SLU 53	11	-497	4743	31.07	8.14	0.04
295	SLU 54	11	-500	4760	31.35	8.11	0.04
295	SLU 55	11	-499	4738	31.32	8.01	0.04
295	SLU 56	12	-507	4814	31.75	8.27	0.04
295	SLU 57	12	-510	4831	32.02	8.23	0.04
295	SLU 58	11	-504	4781	31.54	8.19	0.04

Nodo	Cont.	Reazione a traslazione			Reazione a rotazione		
Ind.	N.br.	x	y	z	x	y	z
295	SLU 59	11	-507	4798	31.81	8.16	0.04
295	SLU 60	12	-501	4821	31.38	8.31	0.04
295	SLU 61	12	-504	4838	31.65	8.28	0.04
295	SLU 62	12	-511	4892	32.05	8.43	0.04
295	SLU 63	12	-515	4908	32.33	8.4	0.04
295	SLU 64	11	-484	4630	30.24	7.94	0.04
295	SLU 65	11	-489	4658	30.7	7.89	0.04
295	SLU 66	11	-498	4734	31.12	8.14	0.04
295	SLU 67	11	-501	4751	31.4	8.11	0.04
295	SLU 68	11	-500	4729	31.37	8.01	0.04
295	SLU 69	12	-509	4805	31.8	8.27	0.04
295	SLU 70	12	-512	4822	32.07	8.23	0.04
295	SLU 71	11	-505	4772	31.59	8.19	0.04
295	SLU 72	11	-509	4788	31.86	8.16	0.04
295	SLU 73	12	-531	5082	33.47	8.74	0.04
295	SLU 74	13	-540	5157	33.9	9	0.05
295	SLU 75	13	-543	5174	34.18	8.96	0.05
295	SLU 76	12	-542	5152	34.15	8.87	0.04
295	SLU 77	13	-551	5228	34.58	9.12	0.05
295	SLU 78	13	-554	5245	34.85	9.09	0.05
295	SLU 79	13	-547	5195	34.37	9.04	0.05
295	SLU 80	13	-551	5212	34.64	9.01	0.05
295	SLU 81	13	-544	5235	34.21	9.16	0.05
295	SLU 82	13	-547	5252	34.48	9.13	0.05
295	SLU 83	13	-555	5306	34.88	9.29	0.05
295	SLU 84	13	-558	5323	35.16	9.25	0.05
295	SLE RA 1	8	-363	3471	22.64	5.92	0.03
295	SLE RA 2	8	-366	3489	22.95	5.89	0.03
295	SLE RA 3	8	-372	3540	23.23	6.06	0.03
295	SLE RA 4	8	-374	3551	23.41	6.03	0.03
295	SLE RA 5	8	-373	3536	23.39	5.97	0.03
295	SLE RA 6	9	-379	3587	23.68	6.14	0.03
295	SLE RA 7	9	-381	3598	23.86	6.12	0.03
295	SLE RA 8	9	-377	3565	23.54	6.09	0.03
295	SLE RA 9	9	-379	3576	23.72	6.06	0.03
295	SLE RA 10	9	-394	3772	24.8	6.46	0.03
295	SLE RA 11	9	-400	3822	25.08	6.63	0.03
295	SLE RA 12	9	-402	3833	25.26	6.6	0.03
295	SLE RA 13	9	-401	3819	25.25	6.54	0.03
295	SLE RA 14	9	-407	3869	25.53	6.71	0.03
295	SLE RA 15	9	-409	3881	25.71	6.69	0.03
295	SLE RA 16	9	-405	3847	25.39	6.66	0.03
295	SLE RA 17	9	-407	3858	25.57	6.63	0.03
295	SLE RA 18	9	-403	3874	25.29	6.74	0.03
295	SLE RA 19	9	-405	3885	25.47	6.71	0.03
295	SLE RA 20	10	-410	3921	25.73	6.82	0.03
295	SLE RA 21	10	-412	3932	25.92	6.8	0.03
295	SLE FR 1	8	-363	3471	22.64	5.92	0.03
295	SLE FR 2	8	-364	3474	22.7	5.92	0.03
295	SLE FR 3	8	-366	3490	22.82	5.96	0.03
295	SLE FR 4	9	-376	3595	23.5	6.16	0.03
295	SLE FR 5	9	-378	3611	23.61	6.2	0.03
295	SLE FR 6	9	-383	3672	23.96	6.33	0.03
295	SLE QP 1	8	-363	3471	22.64	5.92	0.03
295	SLE QP 2	9	-375	3592	23.43	6.17	0.03
295	SLD 1	5	-320	3405	20.02	4.37	-0.03
295	SLD 2	5	-320	3405	20.02	4.37	-0.03
295	SLD 3	5	-700	4739	44.8	4.01	-0.02
295	SLD 4	5	-700	4739	44.8	4.01	-0.02
295	SLD 5	6	219	1513	-15.18	6.16	-0.01
295	SLD 6	6	219	1513	-15.18	6.16	-0.01
295	SLD 7	9	-1049	5959	67.43	4.98	0.04
295	SLD 8	9	-1049	5959	67.43	4.98	0.04
295	SLD 9	8	300	1225	-20.56	7.35	0.03
295	SLD 10	8	300	1225	-20.56	7.35	0.03
295	SLD 11	11	-968	5671	62.04	6.17	0.07
295	SLD 12	11	-968	5671	62.04	6.17	0.07
295	SLD 13	12	-50	2445	2.06	8.32	0.08
295	SLD 14	12	-50	2445	2.06	8.32	0.08
295	SLD 15	13	-430	3778	26.85	7.97	0.09
295	SLD 16	13	-430	3778	26.85	7.97	0.09
295	SLV 1	-1	-247	3143	15.45	2.04	-0.12
295	SLV 2	-1	-247	3143	15.45	2.04	-0.12
295	SLV 3	1	-1145	6290	73.93	1.14	-0.09
295	SLV 4	1	-1145	6290	73.93	1.14	-0.09
295	SLV 5	3	1026	-1315	-67.66	6.3	-0.06
295	SLV 6	3	1026	-1315	-67.66	6.3	-0.06
295	SLV 7	9	-1968	9173	127.28	3.29	0.04
295	SLV 8	9	-1968	9173	127.28	3.29	0.04
295	SLV 9	8	1218	-1990	-80.41	9.04	0.02
295	SLV 10	8	1218	-1990	-80.41	9.04	0.02
295	SLV 11	14	-1775	8498	114.52	6.04	0.13
295	SLV 12	14	-1775	8498	114.52	6.04	0.13
295	SLV 13	16	395	894	-27.06	11.2	0.15
295	SLV 14	16	395	894	-27.06	11.2	0.15
295	SLV 15	18	-503	4040	31.42	10.3	0.18
295	SLV 16	18	-503	4040	31.42	10.3	0.18
296	SLU 1	2	-119	3068	-9.25	2.43	0.01
296	SLU 2	2	-120	3069	-9.24	2.43	0.01
296	SLU 3	2	-119	3145	-9.77	2.5	0.01
296	SLU 4	2	-119	3146	-9.77	2.5	0.01

Nodo	Cont.	Reazione a traslazione			Reazione a rotazione		
Ind.	N.br.	x	y	z	x	y	z
296	SLU 5	2	-116	3112	-9.66	2.46	0.01
296	SLU 6	2	-115	3188	-10.18	2.52	0.01
296	SLU 7	2	-115	3188	-10.18	2.52	0.01
296	SLU 8	2	-113	3153	-10.08	2.49	0.01
296	SLU 9	2	-113	3154	-10.07	2.48	0.01
296	SLU 10	2	-133	3496	-10.79	2.86	0.01
296	SLU 11	2	-132	3572	-11.32	2.93	0.01
296	SLU 12	2	-132	3573	-11.31	2.93	0.01
296	SLU 13	2	-130	3539	-11.21	2.89	0.01
296	SLU 14	2	-128	3615	-11.73	2.95	0.01
296	SLU 15	2	-128	3615	-11.73	2.95	0.01
296	SLU 16	2	-126	3580	-11.63	2.91	0.01
296	SLU 17	2	-126	3581	-11.62	2.91	0.01
296	SLU 18	2	-138	3678	-11.46	3.04	0.01
296	SLU 19	2	-138	3679	-11.46	3.04	0.01
296	SLU 20	2	-135	3721	-11.87	3.07	0.01
296	SLU 21	2	-135	3721	-11.87	3.07	0.01
296	SLU 22	2	-136	3481	-10.69	2.86	0.01
296	SLU 23	2	-136	3482	-10.69	2.86	0.01
296	SLU 24	2	-135	3558	-11.21	2.93	0.01
296	SLU 25	2	-135	3559	-11.21	2.93	0.01
296	SLU 26	2	-133	3525	-11.1	2.89	0.01
296	SLU 27	2	-132	3601	-11.63	2.95	0.01
296	SLU 28	2	-132	3601	-11.62	2.95	0.01
296	SLU 29	2	-129	3566	-11.52	2.91	0.01
296	SLU 30	2	-129	3567	-11.52	2.91	0.01
296	SLU 31	2	-149	3909	-12.24	3.29	0.01
296	SLU 32	3	-148	3985	-12.76	3.36	0.01
296	SLU 33	3	-148	3986	-12.76	3.35	0.01
296	SLU 34	3	-146	3952	-12.65	3.32	0.01
296	SLU 35	3	-145	4028	-13.18	3.38	0.01
296	SLU 36	3	-145	4029	-13.17	3.38	0.01
296	SLU 37	3	-142	3993	-13.07	3.34	0.01
296	SLU 38	3	-142	3994	-13.07	3.34	0.01
296	SLU 39	3	-154	4091	-12.9	3.47	0.01
296	SLU 40	3	-155	4092	-12.9	3.47	0.01
296	SLU 41	3	-151	4134	-13.32	3.5	0.01
296	SLU 42	3	-151	4134	-13.32	3.5	0.01
296	SLU 43	2	-150	3846	-11.53	3.02	0.01
296	SLU 44	2	-150	3848	-11.52	3.02	0.01
296	SLU 45	2	-149	3924	-12.05	3.08	0.01
296	SLU 46	2	-149	3924	-12.05	3.08	0.01
296	SLU 47	2	-147	3890	-11.94	3.04	0.01
296	SLU 48	2	-145	3966	-12.46	3.11	0.01
296	SLU 49	2	-146	3967	-12.46	3.11	0.01
296	SLU 50	2	-143	3932	-12.36	3.07	0.01
296	SLU 51	2	-143	3933	-12.35	3.07	0.01
296	SLU 52	3	-163	4275	-13.07	3.44	0.01
296	SLU 53	3	-162	4351	-13.6	3.51	0.01
296	SLU 54	3	-162	4352	-13.59	3.51	0.01
296	SLU 55	3	-160	4318	-13.48	3.47	0.01
296	SLU 56	3	-159	4393	-14.01	3.53	0.01
296	SLU 57	3	-159	4394	-14.01	3.53	0.01
296	SLU 58	3	-156	4359	-13.91	3.49	0.01
296	SLU 59	3	-156	4360	-13.9	3.49	0.01
296	SLU 60	3	-168	4457	-13.74	3.63	0.01
296	SLU 61	3	-169	4457	-13.74	3.63	0.01
296	SLU 62	3	-165	4499	-14.15	3.65	0.01
296	SLU 63	3	-165	4500	-14.15	3.65	0.01
296	SLU 64	3	-166	4260	-12.97	3.45	0.01
296	SLU 65	3	-166	4261	-12.97	3.45	0.01
296	SLU 66	3	-165	4337	-13.49	3.51	0.01
296	SLU 67	3	-165	4337	-13.49	3.51	0.01
296	SLU 68	3	-163	4304	-13.38	3.47	0.01
296	SLU 69	3	-162	4379	-13.91	3.54	0.01
296	SLU 70	3	-162	4380	-13.9	3.54	0.01
296	SLU 71	3	-159	4345	-13.8	3.5	0.01
296	SLU 72	3	-160	4346	-13.8	3.5	0.01
296	SLU 73	3	-179	4688	-14.51	3.87	0.01
296	SLU 74	3	-178	4764	-15.04	3.94	0.01
296	SLU 75	3	-178	4765	-15.04	3.94	0.01
296	SLU 76	3	-176	4731	-14.93	3.9	0.01
296	SLU 77	3	-175	4806	-15.46	3.96	0.01
296	SLU 78	3	-175	4807	-15.45	3.96	0.01
296	SLU 79	3	-173	4772	-15.35	3.92	0.01
296	SLU 80	3	-173	4773	-15.35	3.92	0.01
296	SLU 81	3	-185	4870	-15.18	4.06	0.01
296	SLU 82	3	-185	4870	-15.18	4.06	0.01
296	SLU 83	3	-181	4912	-15.6	4.08	0.01
296	SLU 84	3	-182	4913	-15.6	4.08	0.01
296	SLE RA 1	2	-124	3186	-9.66	2.56	0.01
296	SLE RA 2	2	-124	3187	-9.66	2.56	0.01
296	SLE RA 3	2	-124	3237	-10.01	2.6	0.01
296	SLE RA 4	2	-124	3238	-10.01	2.6	0.01
296	SLE RA 5	2	-122	3215	-9.93	2.57	0.01
296	SLE RA 6	2	-121	3266	-10.29	2.62	0.01
296	SLE RA 7	2	-121	3266	-10.28	2.62	0.01
296	SLE RA 8	2	-120	3243	-10.21	2.59	0.01
296	SLE RA 9	2	-120	3243	-10.21	2.59	0.01
296	SLE RA 10	2	-133	3471	-10.69	2.84	0.01
296	SLE RA 11	2	-132	3522	-11.04	2.88	0.01

Nodo	Cont.	Reazione a traslazione			Reazione a rotazione		
Ind.	N.br.	x	y	z	x	y	z
296	SLE RA 12	2	-132	3522	-11.04	2.88	0.01
296	SLE RA 13	2	-131	3500	-10.97	2.86	0.01
296	SLE RA 14	2	-130	3550	-11.32	2.9	0.01
296	SLE RA 15	2	-130	3551	-11.31	2.9	0.01
296	SLE RA 16	2	-128	3527	-11.25	2.88	0.01
296	SLE RA 17	2	-129	3528	-11.24	2.88	0.01
296	SLE RA 18	2	-137	3593	-11.14	2.96	0.01
296	SLE RA 19	2	-137	3593	-11.13	2.96	0.01
296	SLE RA 20	2	-134	3621	-11.41	2.98	0.01
296	SLE RA 21	2	-135	3622	-11.41	2.98	0.01
296	SLE FR 1	2	-124	3186	-9.66	2.56	0.01
296	SLE FR 2	2	-124	3186	-9.66	2.56	0.01
296	SLE FR 3	2	-123	3197	-9.77	2.56	0.01
296	SLE FR 4	2	-128	3308	-10.1	2.68	0.01
296	SLE FR 5	2	-127	3319	-10.21	2.69	0.01
296	SLE FR 6	2	-130	3389	-10.4	2.76	0.01
296	SLE QP 1	2	-124	3186	-9.66	2.56	0.01
296	SLE QP 2	2	-128	3308	-10.1	2.68	0.01
296	SLD 1	3	-65	3416	-12.89	3.91	0.01
296	SLD 2	3	-65	3416	-12.89	3.91	0.01
296	SLD 3	3	-425	3610	1.76	4.63	0.02
296	SLD 4	3	-425	3610	1.76	4.63	0.02
296	SLD 5	3	437	3047	-33.16	1.95	0.01
296	SLD 6	3	437	3047	-33.16	1.95	0.01
296	SLD 7	1	-763	3692	15.68	4.36	0.01
296	SLD 8	1	-763	3692	15.68	4.36	0.01
296	SLD 9	3	507	2924	-35.89	0.99	0.01
296	SLD 10	3	507	2924	-35.89	0.99	0.01
296	SLD 11	1	-693	3569	12.96	3.41	0.01
296	SLD 12	1	-693	3569	12.96	3.41	0.01
296	SLD 13	1	169	3006	-21.97	0.73	0
296	SLD 14	1	169	3006	-21.97	0.73	0
296	SLD 15	1	-191	3199	-7.32	1.45	0
296	SLD 16	1	-191	3199	-7.32	1.45	0
296	SLV 1	5	26	3561	-16.84	5.51	0.02
296	SLV 2	5	26	3561	-16.84	5.51	0.02
296	SLV 3	3	-825	4023	17.73	7.31	0.02
296	SLV 4	3	-825	4023	17.73	7.31	0.02
296	SLV 5	5	1208	2683	-64.56	0.8	0.01
296	SLV 6	5	1208	2683	-64.56	0.8	0.01
296	SLV 7	0	-1627	4223	50.68	6.79	0.02
296	SLV 8	0	-1627	4223	50.68	6.79	0.02
296	SLV 9	4	1371	2392	-70.89	-1.44	0
296	SLV 10	4	1371	2392	-70.89	-1.44	0
296	SLV 11	-1	-1464	3933	44.35	4.56	0.01
296	SLV 12	-1	-1464	3933	44.35	4.56	0.01
296	SLV 13	1	569	2593	-37.94	-1.95	-0.01
296	SLV 14	1	569	2593	-37.94	-1.95	-0.01
296	SLV 15	-1	-282	3055	-3.37	-0.15	0
296	SLV 16	-1	-282	3055	-3.37	-0.15	0
297	SLU 1	785	-1004	6440	28.62	19.99	-0.05
297	SLU 2	769	-942	6189	26.39	19.87	-0.03
297	SLU 3	822	-1043	6716	29.69	21.06	-0.05
297	SLU 4	813	-1006	6565	28.35	20.99	-0.04
297	SLU 5	803	-972	6418	27.17	20.86	-0.03
297	SLU 6	856	-1073	6945	30.47	22.05	-0.05
297	SLU 7	847	-1036	6794	29.13	21.98	-0.04
297	SLU 8	852	-1064	6899	30.18	21.96	-0.04
297	SLU 9	842	-1027	6749	28.84	21.89	-0.03
297	SLU 10	877	-1054	6974	29.5	22.81	-0.03
297	SLU 11	930	-1156	7501	32.8	23.99	-0.05
297	SLU 12	921	-1118	7350	31.46	23.93	-0.04
297	SLU 13	911	-1084	7203	30.28	23.8	-0.03
297	SLU 14	964	-1186	7730	33.58	24.98	-0.04
297	SLU 15	954	-1148	7579	32.24	24.91	-0.03
297	SLU 16	959	-1176	7684	33.29	24.9	-0.04
297	SLU 17	950	-1139	7533	31.95	24.83	-0.03
297	SLU 18	939	-1165	7562	33.07	24.18	-0.05
297	SLU 19	929	-1128	7411	31.73	24.11	-0.04
297	SLU 20	972	-1195	7791	33.85	25.17	-0.04
297	SLU 21	963	-1157	7640	32.51	25.1	-0.03
297	SLU 22	893	-1119	7238	31.82	22.95	-0.05
297	SLU 23	878	-1057	6986	29.58	22.84	-0.03
297	SLU 24	931	-1158	7513	32.88	24.02	-0.05
297	SLU 25	922	-1121	7362	31.54	23.95	-0.04
297	SLU 26	912	-1087	7216	30.36	23.82	-0.03
297	SLU 27	964	-1188	7743	33.66	25.01	-0.04
297	SLU 28	955	-1151	7592	32.32	24.94	-0.03
297	SLU 29	960	-1179	7697	33.37	24.93	-0.04
297	SLU 30	951	-1142	7546	32.03	24.86	-0.03
297	SLU 31	986	-1169	7771	32.7	25.77	-0.03
297	SLU 32	1039	-1271	8298	35.99	26.96	-0.05
297	SLU 33	1030	-1233	8147	34.65	26.89	-0.03
297	SLU 34	1019	-1199	8001	33.47	26.76	-0.03
297	SLU 35	1072	-1300	8528	36.77	27.95	-0.04
297	SLU 36	1063	-1263	8377	35.43	27.88	-0.03
297	SLU 37	1068	-1291	8482	36.49	27.86	-0.04
297	SLU 38	1059	-1254	8331	35.15	27.79	-0.03
297	SLU 39	1047	-1280	8359	36.26	27.15	-0.05
297	SLU 40	1038	-1242	8208	34.92	27.08	-0.04
297	SLU 41	1081	-1310	8589	37.04	28.13	-0.04

Nodo	Cont.	Reazione a traslazione			Reazione a rotazione		
Ind.	N.br.	x	y	z	x	y	z
297	SLU 42	1072	-1272	8438	35.7	28.07	-0.03
297	SLU 43	983	-1266	8099	36.12	24.97	-0.07
297	SLU 44	968	-1204	7847	33.88	24.85	-0.05
297	SLU 45	1021	-1305	8374	37.18	26.04	-0.07
297	SLU 46	1011	-1268	8223	35.84	25.97	-0.05
297	SLU 47	1001	-1234	8077	34.66	25.84	-0.05
297	SLU 48	1054	-1335	8604	37.96	27.03	-0.06
297	SLU 49	1045	-1298	8453	36.62	26.96	-0.05
297	SLU 50	1050	-1326	8558	37.67	26.94	-0.06
297	SLU 51	1041	-1289	8407	36.33	26.87	-0.05
297	SLU 52	1075	-1316	8632	37	27.79	-0.05
297	SLU 53	1128	-1418	9159	40.29	28.97	-0.06
297	SLU 54	1119	-1380	9008	38.95	28.91	-0.05
297	SLU 55	1109	-1346	8862	37.78	28.78	-0.04
297	SLU 56	1162	-1447	9389	41.07	29.96	-0.06
297	SLU 57	1153	-1410	9238	39.73	29.89	-0.05
297	SLU 58	1157	-1438	9343	40.79	29.88	-0.06
297	SLU 59	1148	-1401	9192	39.45	29.81	-0.05
297	SLU 60	1137	-1427	9220	40.56	29.16	-0.06
297	SLU 61	1128	-1389	9069	39.23	29.09	-0.05
297	SLU 62	1170	-1457	9450	41.34	30.15	-0.06
297	SLU 63	1161	-1419	9299	40	30.08	-0.05
297	SLU 64	1091	-1381	8896	39.31	27.93	-0.06
297	SLU 65	1076	-1319	8645	37.08	27.82	-0.05
297	SLU 66	1129	-1420	9172	40.37	29	-0.06
297	SLU 67	1120	-1383	9021	39.03	28.93	-0.05
297	SLU 68	1110	-1349	8874	37.85	28.8	-0.04
297	SLU 69	1163	-1450	9401	41.15	29.99	-0.06
297	SLU 70	1153	-1413	9250	39.81	29.92	-0.05
297	SLU 71	1158	-1441	9355	40.86	29.91	-0.06
297	SLU 72	1149	-1403	9205	39.53	29.84	-0.05
297	SLU 73	1184	-1431	9430	40.19	30.75	-0.04
297	SLU 74	1237	-1533	9957	43.49	31.94	-0.06
297	SLU 75	1228	-1495	9806	42.15	31.87	-0.05
297	SLU 76	1217	-1461	9659	40.97	31.74	-0.04
297	SLU 77	1270	-1562	10186	44.26	32.93	-0.06
297	SLU 78	1261	-1525	10035	42.92	32.86	-0.05
297	SLU 79	1266	-1553	10140	43.98	32.84	-0.06
297	SLU 80	1257	-1516	9990	42.64	32.77	-0.05
297	SLU 81	1245	-1542	10018	43.76	32.13	-0.06
297	SLU 82	1236	-1504	9867	42.42	32.06	-0.05
297	SLU 83	1279	-1572	10247	44.53	33.11	-0.06
297	SLU 84	1270	-1534	10096	43.2	33.05	-0.05
297	SLE RA 1	816	-1037	6668	29.54	20.83	-0.05
297	SLE RA 2	806	-996	6500	28.05	20.76	-0.04
297	SLE RA 3	841	-1063	6852	30.24	21.55	-0.05
297	SLE RA 4	835	-1038	6751	29.35	21.5	-0.04
297	SLE RA 5	828	-1016	6653	28.57	21.42	-0.04
297	SLE RA 6	863	-1083	7005	30.76	22.21	-0.05
297	SLE RA 7	857	-1058	6904	29.87	22.16	-0.04
297	SLE RA 8	860	-1077	6974	30.57	22.15	-0.05
297	SLE RA 9	854	-1052	6874	29.68	22.11	-0.04
297	SLE RA 10	877	-1071	7024	30.12	22.72	-0.04
297	SLE RA 11	913	-1138	7375	32.32	23.51	-0.05
297	SLE RA 12	907	-1113	7274	31.43	23.46	-0.04
297	SLE RA 13	900	-1090	7177	30.64	23.37	-0.03
297	SLE RA 14	935	-1158	7528	32.84	24.16	-0.05
297	SLE RA 15	929	-1133	7427	31.95	24.12	-0.04
297	SLE RA 16	932	-1152	7497	32.65	24.11	-0.04
297	SLE RA 17	926	-1127	7397	31.76	24.06	-0.04
297	SLE RA 18	918	-1144	7416	32.5	23.63	-0.05
297	SLE RA 19	912	-1119	7315	31.61	23.59	-0.04
297	SLE RA 20	941	-1164	7569	33.02	24.29	-0.05
297	SLE RA 21	935	-1139	7468	32.13	24.24	-0.04
297	SLE FR 1	816	-1037	6668	29.54	20.83	-0.05
297	SLE FR 2	814	-1029	6634	29.24	20.82	-0.05
297	SLE FR 3	825	-1045	6729	29.74	21.1	-0.05
297	SLE FR 4	844	-1061	6859	30.13	21.66	-0.05
297	SLE FR 5	855	-1077	6953	30.63	21.94	-0.05
297	SLE FR 6	867	-1091	7042	31.02	22.23	-0.05
297	SLE QP 1	816	-1037	6668	29.54	20.83	-0.05
297	SLE QP 2	846	-1069	6892	30.43	21.67	-0.05
297	SLD 1	1377	-1115	8798	29.08	41.12	0.22
297	SLD 2	1377	-1115	8798	29.08	41.12	0.22
297	SLD 3	1519	-1489	10397	42.62	45.09	0.09
297	SLD 4	1519	-1489	10397	42.62	45.09	0.09
297	SLD 5	790	-516	5039	9.48	21.49	0.22
297	SLD 6	790	-516	5039	9.48	21.49	0.22
297	SLD 7	1264	-1762	10368	54.63	34.72	-0.2
297	SLD 8	1264	-1762	10368	54.63	34.72	-0.2
297	SLD 9	429	-377	3416	6.23	8.63	0.1
297	SLD 10	429	-377	3416	6.23	8.63	0.1
297	SLD 11	903	-1622	8745	51.37	21.86	-0.32
297	SLD 12	903	-1622	8745	51.37	21.86	-0.32
297	SLD 13	174	-650	3388	18.23	-1.75	-0.19
297	SLD 14	174	-650	3388	18.23	-1.75	-0.19
297	SLD 15	316	-1024	4987	31.77	2.22	-0.32
297	SLD 16	316	-1024	4987	31.77	2.22	-0.32
297	SLV 1	2044	-1171	11166	27.37	65.66	0.56
297	SLV 2	2044	-1171	11166	27.37	65.66	0.56
297	SLV 3	2379	-2043	14910	58.95	75.03	0.27

Nodo	Cont.	Reazione a traslazione			Reazione a rotazione		
Ind.	N.br.	x	y	z	x	y	z
297	SLV 4	2379	-2043	14910	58.95	75.03	0.27
297	SLV 5	698	223	2497	-18.39	20.65	0.58
297	SLV 6	698	223	2497	-18.39	20.65	0.58
297	SLV 7	1814	-2684	14975	86.88	51.9	-0.4
297	SLV 8	1814	-2684	14975	86.88	51.9	-0.4
297	SLV 9	-121	545	-1191	-26.03	-8.55	0.3
297	SLV 10	-121	545	-1191	-26.03	-8.55	0.3
297	SLV 11	995	-2361	11288	79.24	22.69	-0.68
297	SLV 12	995	-2361	11288	79.24	22.69	-0.68
297	SLV 13	-686	-96	-1126	1.9	-31.68	-0.37
297	SLV 14	-686	-96	-1126	1.9	-31.68	-0.37
297	SLV 15	-351	-968	2618	33.48	-22.31	-0.66
297	SLV 16	-351	-968	2618	33.48	-22.31	-0.66
298	SLU 1	487	-5	4766	-0.26	27.9	0.03
298	SLU 2	498	-4	4601	-0.51	27.99	0.03
298	SLU 3	516	-5	4959	-0.27	29.52	0.03
298	SLU 4	523	-5	4860	-0.42	29.57	0.03
298	SLU 5	526	-5	4760	-0.52	29.52	0.03
298	SLU 6	544	-5	5118	-0.28	31.04	0.03
298	SLU 7	551	-5	5019	-0.43	31.1	0.03
298	SLU 8	543	-5	5084	-0.27	30.96	0.03
298	SLU 9	550	-5	4985	-0.43	31.01	0.03
298	SLU 10	581	-5	5186	-0.51	32.4	0.03
298	SLU 11	598	-6	5544	-0.26	33.92	0.04
298	SLU 12	605	-5	5445	-0.42	33.98	0.03
298	SLU 13	609	-5	5345	-0.52	33.93	0.03
298	SLU 14	626	-6	5702	-0.27	35.45	0.04
298	SLU 15	633	-6	5604	-0.42	35.51	0.04
298	SLU 16	625	-6	5669	-0.27	35.36	0.04
298	SLU 17	632	-6	5570	-0.42	35.42	0.04
298	SLU 18	605	-6	5602	-0.25	34.19	0.04
298	SLU 19	612	-5	5503	-0.4	34.25	0.04
298	SLU 20	633	-6	5761	-0.26	35.72	0.04
298	SLU 21	639	-6	5662	-0.41	35.78	0.04
298	SLU 22	569	-6	5357	-0.26	32.33	0.03
298	SLU 23	580	-5	5192	-0.52	32.42	0.03
298	SLU 24	598	-6	5550	-0.27	33.94	0.04
298	SLU 25	605	-5	5451	-0.43	34	0.03
298	SLU 26	608	-5	5351	-0.52	33.95	0.03
298	SLU 27	626	-6	5708	-0.28	35.47	0.04
298	SLU 28	633	-6	5609	-0.43	35.53	0.04
298	SLU 29	625	-6	5675	-0.28	35.38	0.04
298	SLU 30	632	-6	5576	-0.43	35.44	0.04
298	SLU 31	663	-6	5777	-0.51	36.83	0.04
298	SLU 32	680	-6	6134	-0.27	38.35	0.04
298	SLU 33	687	-6	6035	-0.42	38.4	0.04
298	SLU 34	691	-6	5936	-0.52	38.35	0.04
298	SLU 35	708	-7	6293	-0.28	39.88	0.04
298	SLU 36	715	-6	6194	-0.43	39.93	0.04
298	SLU 37	707	-6	6259	-0.27	39.79	0.04
298	SLU 38	714	-6	6161	-0.42	39.84	0.04
298	SLU 39	687	-6	6192	-0.25	38.62	0.04
298	SLU 40	693	-6	6093	-0.41	38.68	0.04
298	SLU 41	715	-7	6351	-0.26	40.15	0.04
298	SLU 42	721	-6	6252	-0.41	40.2	0.04
298	SLU 43	606	-6	5994	-0.34	34.75	0.04
298	SLU 44	617	-6	5829	-0.59	34.85	0.04
298	SLU 45	634	-7	6186	-0.35	36.37	0.04
298	SLU 46	641	-6	6087	-0.5	36.43	0.04
298	SLU 47	644	-6	5988	-0.6	36.37	0.04
298	SLU 48	662	-7	6345	-0.35	37.9	0.04
298	SLU 49	669	-6	6246	-0.51	37.95	0.04
298	SLU 50	661	-7	6311	-0.35	37.81	0.04
298	SLU 51	668	-6	6213	-0.5	37.86	0.04
298	SLU 52	699	-6	6414	-0.58	39.25	0.04
298	SLU 53	717	-7	6771	-0.34	40.78	0.04
298	SLU 54	723	-7	6672	-0.49	40.83	0.04
298	SLU 55	727	-6	6572	-0.59	40.78	0.04
298	SLU 56	745	-7	6930	-0.35	42.3	0.04
298	SLU 57	751	-7	6831	-0.5	42.36	0.04
298	SLU 58	744	-7	6896	-0.34	42.21	0.04
298	SLU 59	750	-7	6797	-0.5	42.27	0.04
298	SLU 60	723	-7	6829	-0.33	41.05	0.04
298	SLU 61	730	-7	6730	-0.48	41.1	0.04
298	SLU 62	751	-7	6988	-0.33	42.57	0.04
298	SLU 63	758	-7	6889	-0.49	42.63	0.04
298	SLU 64	688	-7	6584	-0.34	39.18	0.04
298	SLU 65	699	-6	6420	-0.59	39.27	0.04
298	SLU 66	716	-7	6777	-0.35	40.8	0.04
298	SLU 67	723	-7	6678	-0.5	40.85	0.04
298	SLU 68	726	-6	6578	-0.6	40.8	0.04
298	SLU 69	744	-7	6936	-0.36	42.32	0.04
298	SLU 70	751	-7	6837	-0.51	42.38	0.04
298	SLU 71	743	-7	6902	-0.35	42.23	0.04
298	SLU 72	750	-7	6803	-0.51	42.29	0.04
298	SLU 73	781	-7	7004	-0.59	43.68	0.04
298	SLU 74	799	-8	7362	-0.34	45.2	0.05
298	SLU 75	805	-7	7263	-0.5	45.26	0.05
298	SLU 76	809	-7	7163	-0.6	45.21	0.05
298	SLU 77	826	-8	7521	-0.35	46.73	0.05
298	SLU 78	833	-7	7422	-0.5	46.78	0.05

Nodo	Cont.	Reazione a traslazione			Reazione a rotazione		
Ind.	N.br.	x	y	z	x	y	z
298	SLU 79	826	-8	7487	-0.35	46.64	0.05
298	SLU 80	832	-7	7388	-0.5	46.7	0.05
298	SLU 81	805	-8	7420	-0.33	45.47	0.05
298	SLU 82	812	-7	7321	-0.48	45.53	0.05
298	SLU 83	833	-8	7579	-0.34	47	0.05
298	SLU 84	839	-8	7480	-0.49	47.06	0.05
298	SLE RA 1	511	-5	4935	-0.26	29.17	0.03
298	SLE RA 2	518	-5	4825	-0.43	29.23	0.03
298	SLE RA 3	530	-5	5063	-0.27	30.24	0.03
298	SLE RA 4	534	-5	4998	-0.37	30.28	0.03
298	SLE RA 5	537	-5	4931	-0.43	30.25	0.03
298	SLE RA 6	549	-5	5169	-0.27	31.26	0.03
298	SLE RA 7	553	-5	5103	-0.37	31.3	0.03
298	SLE RA 8	548	-5	5147	-0.27	31.2	0.03
298	SLE RA 9	552	-5	5081	-0.37	31.24	0.03
298	SLE RA 10	573	-5	5215	-0.43	32.16	0.03
298	SLE RA 11	585	-6	5453	-0.26	33.18	0.03
298	SLE RA 12	589	-5	5387	-0.37	33.22	0.03
298	SLE RA 13	592	-5	5321	-0.43	33.18	0.03
298	SLE RA 14	603	-6	5559	-0.27	34.2	0.04
298	SLE RA 15	608	-6	5493	-0.37	34.24	0.04
298	SLE RA 16	603	-6	5537	-0.27	34.14	0.04
298	SLE RA 17	607	-6	5471	-0.37	34.18	0.03
298	SLE RA 18	589	-6	5492	-0.25	33.36	0.04
298	SLE RA 19	594	-6	5426	-0.36	33.4	0.03
298	SLE RA 20	608	-6	5598	-0.26	34.38	0.04
298	SLE RA 21	612	-6	5532	-0.36	34.42	0.04
298	SLE FR 1	511	-5	4935	-0.26	29.17	0.03
298	SLE FR 2	512	-5	4913	-0.29	29.18	0.03
298	SLE FR 3	518	-5	4977	-0.26	29.57	0.03
298	SLE FR 4	536	-5	5080	-0.29	30.44	0.03
298	SLE FR 5	542	-5	5145	-0.26	30.83	0.03
298	SLE FR 6	550	-5	5214	-0.26	31.26	0.03
298	SLE QP 1	511	-5	4935	-0.26	29.17	0.03
298	SLE QP 2	534	-5	5102	-0.26	30.42	0.03
298	SLD 1	1230	-10	6254	-5.5	65.57	0.04
298	SLD 2	1230	-10	6254	-5.5	65.57	0.04
298	SLD 3	1384	-13	7341	-1.33	71.99	0.05
298	SLD 4	1384	-13	7341	-1.33	71.99	0.05
298	SLD 5	510	-2	3799	-8.15	31.22	0.02
298	SLD 6	510	-2	3799	-8.15	31.22	0.02
298	SLD 7	1022	-12	7423	5.74	52.64	0.05
298	SLD 8	1022	-12	7423	5.74	52.64	0.05
298	SLD 9	46	2	2782	-6.25	8.21	0.01
298	SLD 10	46	2	2782	-6.25	8.21	0.01
298	SLD 11	559	-9	6405	7.63	29.62	0.04
298	SLD 12	559	-9	6405	7.63	29.62	0.04
298	SLD 13	-315	2	2863	0.82	-11.14	0.01
298	SLD 14	-315	2	2863	0.82	-11.14	0.01
298	SLD 15	-161	-1	3950	4.98	-4.72	0.02
298	SLD 16	-161	-1	3950	4.98	-4.72	0.02
298	SLV 1	2108	-16	7684	-13.19	109.93	0.06
298	SLV 2	2108	-16	7684	-13.19	109.93	0.06
298	SLV 3	2471	-23	10228	-2.68	125.14	0.08
298	SLV 4	2471	-23	10228	-2.68	125.14	0.08
298	SLV 5	456	2	2018	-20.07	31.2	0
298	SLV 6	456	2	2018	-20.07	31.2	0
298	SLV 7	1666	-22	10498	14.95	81.92	0.08
298	SLV 8	1666	-22	10498	14.95	81.92	0.08
298	SLV 9	-597	11	-294	-15.47	-21.07	-0.02
298	SLV 10	-597	11	-294	-15.47	-21.07	-0.02
298	SLV 11	613	-13	8186	19.56	29.65	0.06
298	SLV 12	613	-13	8186	19.56	29.65	0.06
298	SLV 13	-1402	13	-24	2.17	-64.29	-0.02
298	SLV 14	-1402	13	-24	2.17	-64.29	-0.02
298	SLV 15	-1039	5	2520	12.67	-49.08	0.01
298	SLV 16	-1039	5	2520	12.67	-49.08	0.01
299	SLU 1	327	6	4153	-4.34	15.73	-0.01
299	SLU 2	339	6	4032	-4.55	16.09	-0.01
299	SLU 3	351	6	4307	-4.51	16.91	-0.01
299	SLU 4	358	6	4234	-4.64	17.13	-0.01
299	SLU 5	363	7	4156	-4.68	17.27	-0.01
299	SLU 6	376	7	4431	-4.63	18.1	-0.01
299	SLU 7	383	7	4358	-4.76	18.31	-0.01
299	SLU 8	376	6	4401	-4.59	18.1	-0.01
299	SLU 9	383	7	4328	-4.72	18.31	-0.01
299	SLU 10	400	7	4546	-4.97	18.87	-0.01
299	SLU 11	412	7	4821	-4.92	19.69	-0.01
299	SLU 12	419	7	4749	-5.05	19.91	-0.01
299	SLU 13	424	7	4670	-5.1	20.05	-0.01
299	SLU 14	437	7	4945	-5.05	20.88	-0.01
299	SLU 15	444	7	4873	-5.18	21.09	-0.01
299	SLU 16	437	7	4916	-5.01	20.88	-0.01
299	SLU 17	444	7	4843	-5.14	21.09	-0.01
299	SLU 18	414	7	4888	-4.93	19.7	-0.01
299	SLU 19	421	7	4815	-5.06	19.91	-0.01
299	SLU 20	438	7	5012	-5.06	20.88	-0.01
299	SLU 21	446	7	4939	-5.19	21.1	-0.01
299	SLU 22	389	7	4667	-4.78	18.57	-0.01
299	SLU 23	400	7	4546	-5	18.93	-0.01
299	SLU 24	413	7	4821	-4.95	19.76	-0.01

Nodo	Cont.	Reazione a traslazione			Reazione a rotazione		
Ind.	N.br.	x	y	z	x	y	z
299	SLU 25	420	7	4748	-5.08	19.97	-0.01
299	SLU 26	425	7	4670	-5.13	20.12	-0.01
299	SLU 27	437	7	4945	-5.08	20.94	-0.01
299	SLU 28	444	7	4872	-5.21	21.16	-0.01
299	SLU 29	437	7	4915	-5.04	20.94	-0.01
299	SLU 30	444	7	4843	-5.17	21.16	-0.01
299	SLU 31	461	8	5061	-5.42	21.71	-0.01
299	SLU 32	474	8	5336	-5.37	22.53	-0.01
299	SLU 33	481	8	5263	-5.5	22.75	-0.01
299	SLU 34	486	8	5185	-5.54	22.89	-0.01
299	SLU 35	498	8	5460	-5.5	23.72	-0.01
299	SLU 36	505	8	5387	-5.63	23.94	-0.01
299	SLU 37	498	8	5430	-5.45	23.72	-0.01
299	SLU 38	505	8	5357	-5.59	23.94	-0.01
299	SLU 39	476	8	5403	-5.38	22.54	-0.01
299	SLU 40	483	8	5330	-5.51	22.76	-0.01
299	SLU 41	500	8	5527	-5.51	23.73	-0.01
299	SLU 42	507	8	5454	-5.64	23.94	-0.01
299	SLU 43	404	8	5223	-5.48	19.47	-0.01
299	SLU 44	416	8	5101	-5.7	19.83	-0.01
299	SLU 45	428	8	5376	-5.65	20.66	-0.01
299	SLU 46	436	8	5304	-5.78	20.87	-0.01
299	SLU 47	440	8	5225	-5.83	21.02	-0.01
299	SLU 48	453	8	5500	-5.78	21.84	-0.01
299	SLU 49	460	8	5428	-5.91	22.06	-0.01
299	SLU 50	453	8	5471	-5.74	21.84	-0.01
299	SLU 51	460	8	5398	-5.87	22.06	-0.01
299	SLU 52	477	9	5616	-6.12	22.61	-0.01
299	SLU 53	489	9	5891	-6.07	23.44	-0.01
299	SLU 54	496	9	5818	-6.2	23.65	-0.01
299	SLU 55	501	9	5740	-6.24	23.8	-0.01
299	SLU 56	514	9	6015	-6.2	24.62	-0.01
299	SLU 57	521	9	5942	-6.33	24.84	-0.01
299	SLU 58	514	9	5985	-6.15	24.62	-0.01
299	SLU 59	521	9	5912	-6.28	24.84	-0.01
299	SLU 60	491	9	5958	-6.08	23.44	-0.01
299	SLU 61	498	9	5885	-6.21	23.66	-0.01
299	SLU 62	516	9	6082	-6.21	24.63	-0.01
299	SLU 63	523	9	6009	-6.34	24.84	-0.01
299	SLU 64	466	8	5737	-5.93	22.32	-0.01
299	SLU 65	477	9	5616	-6.15	22.67	-0.01
299	SLU 66	490	9	5891	-6.1	23.5	-0.01
299	SLU 67	497	9	5818	-6.23	23.72	-0.01
299	SLU 68	502	9	5740	-6.28	23.86	-0.01
299	SLU 69	514	9	6015	-6.23	24.69	-0.01
299	SLU 70	521	9	5942	-6.36	24.9	-0.01
299	SLU 71	514	9	5985	-6.19	24.69	-0.01
299	SLU 72	522	9	5912	-6.32	24.9	-0.01
299	SLU 73	538	9	6130	-6.56	25.45	-0.01
299	SLU 74	551	9	6405	-6.52	26.28	-0.02
299	SLU 75	558	9	6332	-6.65	26.49	-0.02
299	SLU 76	563	10	6254	-6.69	26.64	-0.01
299	SLU 77	575	10	6529	-6.64	27.46	-0.02
299	SLU 78	582	10	6456	-6.77	27.68	-0.02
299	SLU 79	575	9	6500	-6.6	27.46	-0.02
299	SLU 80	582	10	6427	-6.73	27.68	-0.02
299	SLU 81	553	9	6472	-6.53	26.28	-0.02
299	SLU 82	560	10	6399	-6.66	26.5	-0.02
299	SLU 83	577	10	6596	-6.65	27.47	-0.02
299	SLU 84	584	10	6523	-6.78	27.69	-0.02
299	SLE RA 1	345	6	4300	-4.46	16.54	-0.01
299	SLE RA 2	353	6	4219	-4.61	16.78	-0.01
299	SLE RA 3	361	6	4403	-4.58	17.33	-0.01
299	SLE RA 4	366	7	4354	-4.66	17.47	-0.01
299	SLE RA 5	369	7	4302	-4.69	17.57	-0.01
299	SLE RA 6	377	7	4485	-4.66	18.12	-0.01
299	SLE RA 7	382	7	4437	-4.75	18.26	-0.01
299	SLE RA 8	377	7	4465	-4.63	18.12	-0.01
299	SLE RA 9	382	7	4417	-4.72	18.27	-0.01
299	SLE RA 10	393	7	4562	-4.89	18.63	-0.01
299	SLE RA 11	401	7	4746	-4.86	19.18	-0.01
299	SLE RA 12	406	7	4697	-4.94	19.33	-0.01
299	SLE RA 13	409	7	4645	-4.97	19.42	-0.01
299	SLE RA 14	418	7	4828	-4.94	19.97	-0.01
299	SLE RA 15	422	7	4780	-5.03	20.12	-0.01
299	SLE RA 16	418	7	4808	-4.91	19.97	-0.01
299	SLE RA 17	423	7	4760	-5	20.12	-0.01
299	SLE RA 18	403	7	4790	-4.86	19.19	-0.01
299	SLE RA 19	407	7	4742	-4.95	19.33	-0.01
299	SLE RA 20	419	7	4873	-4.95	19.98	-0.01
299	SLE RA 21	424	7	4824	-5.03	20.12	-0.01
299	SLE FR 1	345	6	4300	-4.46	16.54	-0.01
299	SLE FR 2	346	6	4284	-4.49	16.59	-0.01
299	SLE FR 3	351	6	4333	-4.5	16.86	-0.01
299	SLE FR 4	364	7	4431	-4.61	17.38	-0.01
299	SLE FR 5	369	7	4480	-4.62	17.65	-0.01
299	SLE FR 6	374	7	4545	-4.66	17.86	-0.01
299	SLE QP 1	345	6	4300	-4.46	16.54	-0.01
299	SLE QP 2	362	6	4447	-4.58	17.33	-0.01
299	SLD 1	1238	13	5178	-14.69	51.32	-0.02
299	SLD 2	1238	13	5178	-14.69	51.32	-0.02

Nodo	Cont.	Reazione a traslazione			Reazione a rotazione		
Ind.	N.br.	x	y	z	x	y	z
299	SLD 3	1094	18	6006	-6.15	57.3	-0.02
299	SLD 4	1094	18	6006	-6.15	57.3	-0.02
299	SLD 5	844	1	3410	-20.57	18.46	-0.01
299	SLD 6	844	1	3410	-20.57	18.46	-0.01
299	SLD 7	363	17	6171	7.9	38.39	-0.02
299	SLD 8	363	17	6171	7.9	38.39	-0.02
299	SLD 9	361	-4	2723	-17.07	-3.72	0
299	SLD 10	361	-4	2723	-17.07	-3.72	0
299	SLD 11	-119	12	5484	11.4	16.21	-0.02
299	SLD 12	-119	12	5484	11.4	16.21	-0.02
299	SLD 13	-369	-5	2888	-3.01	-22.63	0
299	SLD 14	-369	-5	2888	-3.01	-22.63	0
299	SLD 15	-514	0	3716	5.53	-16.65	0
299	SLD 16	-514	0	3716	5.53	-16.65	0
299	SLV 1	2360	22	6082	-29.75	94.26	-0.03
299	SLV 2	2360	22	6082	-29.75	94.26	-0.03
299	SLV 3	2018	34	8018	-8.06	108.46	-0.04
299	SLV 4	2018	34	8018	-8.06	108.46	-0.04
299	SLV 5	1480	-7	2001	-45.02	18.89	0
299	SLV 6	1480	-7	2001	-45.02	18.89	0
299	SLV 7	340	33	8455	27.26	66.19	-0.04
299	SLV 8	340	33	8455	27.26	66.19	-0.04
299	SLV 9	384	-20	439	-36.43	-31.52	0.02
299	SLV 10	384	-20	439	-36.43	-31.52	0.02
299	SLV 11	-756	20	6893	35.86	15.78	-0.02
299	SLV 12	-756	20	6893	35.86	15.78	-0.02
299	SLV 13	-1293	-21	876	-1.1	-73.79	0.02
299	SLV 14	-1293	-21	876	-1.1	-73.79	0.02
299	SLV 15	-1635	-9	2813	20.58	-59.6	0.01
299	SLV 16	-1635	-9	2813	20.58	-59.6	0.01
300	SLU 1	212	11	3823	-7.34	11.61	-0.01
300	SLU 2	224	11	3727	-7.54	12.03	-0.01
300	SLU 3	234	11	3953	-7.62	12.72	-0.01
300	SLU 4	241	11	3895	-7.74	12.98	-0.01
300	SLU 5	247	11	3829	-7.75	13.17	-0.01
300	SLU 6	257	11	4055	-7.83	13.86	-0.02
300	SLU 7	265	12	3998	-7.95	14.12	-0.02
300	SLU 8	258	11	4027	-7.76	13.89	-0.02
300	SLU 9	266	11	3970	-7.88	14.14	-0.02
300	SLU 10	269	12	4207	-8.25	14.26	-0.02
300	SLU 11	278	12	4433	-8.33	14.95	-0.02
300	SLU 12	286	12	4375	-8.45	15.2	-0.02
300	SLU 13	292	12	4309	-8.46	15.4	-0.02
300	SLU 14	301	13	4535	-8.54	16.09	-0.02
300	SLU 15	309	13	4477	-8.66	16.34	-0.02
300	SLU 16	302	12	4507	-8.47	16.11	-0.02
300	SLU 17	310	13	4450	-8.59	16.37	-0.02
300	SLU 18	275	12	4509	-8.35	14.79	-0.02
300	SLU 19	282	12	4451	-8.47	15.04	-0.02
300	SLU 20	298	13	4611	-8.56	15.93	-0.02
300	SLU 21	306	13	4553	-8.68	16.18	-0.02
300	SLU 22	258	12	4298	-8.1	13.95	-0.02
300	SLU 23	271	12	4202	-8.3	14.37	-0.02
300	SLU 24	280	12	4428	-8.39	15.06	-0.02
300	SLU 25	288	12	4370	-8.5	15.31	-0.02
300	SLU 26	294	12	4304	-8.51	15.51	-0.02
300	SLU 27	304	13	4530	-8.6	16.2	-0.02
300	SLU 28	311	13	4472	-8.71	16.45	-0.02
300	SLU 29	305	13	4502	-8.52	16.23	-0.02
300	SLU 30	312	13	4444	-8.64	16.48	-0.02
300	SLU 31	315	13	4682	-9.01	16.59	-0.02
300	SLU 32	325	13	4908	-9.1	17.28	-0.02
300	SLU 33	332	14	4850	-9.21	17.54	-0.02
300	SLU 34	338	13	4784	-9.22	17.73	-0.02
300	SLU 35	348	14	5010	-9.31	18.42	-0.02
300	SLU 36	355	14	4952	-9.42	18.68	-0.02
300	SLU 37	349	14	4982	-9.23	18.45	-0.02
300	SLU 38	356	14	4924	-9.35	18.7	-0.02
300	SLU 39	321	13	4983	-9.12	17.12	-0.02
300	SLU 40	329	14	4926	-9.23	17.38	-0.02
300	SLU 41	345	14	5086	-9.33	18.26	-0.02
300	SLU 42	352	14	5028	-9.44	18.52	-0.02
300	SLU 43	259	13	4807	-9.28	14.29	-0.02
300	SLU 44	272	14	4711	-9.48	14.72	-0.02
300	SLU 45	282	14	4937	-9.56	15.41	-0.02
300	SLU 46	289	14	4880	-9.68	15.66	-0.02
300	SLU 47	295	14	4813	-9.69	15.86	-0.02
300	SLU 48	305	14	5039	-9.77	16.55	-0.02
300	SLU 49	312	14	4982	-9.89	16.8	-0.02
300	SLU 50	306	14	5012	-9.7	16.57	-0.02
300	SLU 51	313	14	4954	-9.82	16.83	-0.02
300	SLU 52	316	15	5191	-10.19	16.94	-0.02
300	SLU 53	326	15	5417	-10.27	17.63	-0.02
300	SLU 54	333	15	5360	-10.39	17.88	-0.02
300	SLU 55	339	15	5293	-10.4	18.08	-0.02
300	SLU 56	349	15	5519	-10.48	18.77	-0.02
300	SLU 57	356	15	5462	-10.6	19.02	-0.02
300	SLU 58	350	15	5492	-10.41	18.8	-0.02
300	SLU 59	357	15	5434	-10.53	19.05	-0.02
300	SLU 60	323	15	5493	-10.3	17.47	-0.02
300	SLU 61	330	15	5435	-10.41	17.72	-0.02

Nodo	Cont.	Reazione a traslazione			Reazione a rotazione		
Ind.	N.br.	x	y	z	x	y	z
300	SLU 62	346	15	5595	-10.51	18.61	-0.02
300	SLU 63	353	15	5537	-10.62	18.86	-0.02
300	SLU 64	306	15	5282	-10.04	16.63	-0.02
300	SLU 65	318	15	5186	-10.24	17.05	-0.02
300	SLU 66	328	15	5412	-10.33	17.74	-0.02
300	SLU 67	336	15	5354	-10.44	18	-0.02
300	SLU 68	342	15	5288	-10.45	18.19	-0.02
300	SLU 69	351	15	5514	-10.54	18.88	-0.02
300	SLU 70	359	15	5456	-10.65	19.14	-0.02
300	SLU 71	352	15	5486	-10.46	18.91	-0.02
300	SLU 72	360	15	5429	-10.58	19.16	-0.02
300	SLU 73	363	16	5666	-10.95	19.28	-0.02
300	SLU 74	372	16	5892	-11.04	19.97	-0.02
300	SLU 75	380	16	5834	-11.15	20.22	-0.02
300	SLU 76	386	16	5768	-11.16	20.42	-0.02
300	SLU 77	395	17	5994	-11.25	21.11	-0.02
300	SLU 78	403	17	5936	-11.36	21.36	-0.02
300	SLU 79	396	16	5966	-11.17	21.13	-0.02
300	SLU 80	404	17	5909	-11.29	21.39	-0.02
300	SLU 81	369	16	5968	-11.06	19.81	-0.02
300	SLU 82	377	16	5910	-11.17	20.06	-0.02
300	SLU 83	392	17	6070	-11.27	20.95	-0.02
300	SLU 84	400	17	6012	-11.39	21.2	-0.02
300	SLE RA 1	225	11	3959	-7.56	12.28	-0.01
300	SLE RA 2	233	11	3895	-7.69	12.56	-0.01
300	SLE RA 3	240	11	4045	-7.75	13.02	-0.02
300	SLE RA 4	245	11	4007	-7.83	13.19	-0.02
300	SLE RA 5	249	11	3963	-7.83	13.32	-0.02
300	SLE RA 6	255	11	4114	-7.89	13.78	-0.02
300	SLE RA 7	260	12	4075	-7.97	13.95	-0.02
300	SLE RA 8	256	11	4095	-7.84	13.8	-0.02
300	SLE RA 9	261	11	4056	-7.92	13.97	-0.02
300	SLE RA 10	263	12	4215	-8.16	14.04	-0.02
300	SLE RA 11	269	12	4365	-8.22	14.5	-0.02
300	SLE RA 12	274	12	4327	-8.3	14.67	-0.02
300	SLE RA 13	278	12	4283	-8.3	14.8	-0.02
300	SLE RA 14	285	12	4433	-8.36	15.26	-0.02
300	SLE RA 15	290	12	4395	-8.44	15.43	-0.02
300	SLE RA 16	285	12	4415	-8.31	15.28	-0.02
300	SLE RA 17	290	12	4376	-8.39	15.45	-0.02
300	SLE RA 18	267	12	4416	-8.23	14.4	-0.02
300	SLE RA 19	272	12	4377	-8.31	14.57	-0.02
300	SLE RA 20	283	12	4484	-8.37	15.16	-0.02
300	SLE RA 21	288	12	4445	-8.45	15.32	-0.02
300	SLE FR 1	225	11	3959	-7.56	12.28	-0.01
300	SLE FR 2	227	11	3946	-7.58	12.34	-0.01
300	SLE FR 3	231	11	3986	-7.61	12.58	-0.01
300	SLE FR 4	239	11	4083	-7.79	12.97	-0.02
300	SLE FR 5	244	11	4123	-7.82	13.22	-0.02
300	SLE FR 6	246	12	4187	-7.9	13.34	-0.02
300	SLE QP 1	225	11	3959	-7.56	12.28	-0.01
300	SLE QP 2	238	11	4096	-7.76	12.91	-0.02
300	SLD 1	1159	16	4586	-22.31	54.71	-0.03
300	SLD 2	1159	16	4586	-22.31	54.71	-0.03
300	SLD 3	1012	26	5264	-8.95	48.49	-0.04
300	SLD 4	1012	26	5264	-8.95	48.49	-0.04
300	SLD 5	737	-3	3216	-32.39	34.89	-0.01
300	SLD 6	737	-3	3216	-32.39	34.89	-0.01
300	SLD 7	247	31	5473	12.14	14.15	-0.03
300	SLD 8	247	31	5473	12.14	14.15	-0.03
300	SLD 9	228	-8	2719	-27.67	11.68	0
300	SLD 10	228	-8	2719	-27.67	11.68	0
300	SLD 11	-262	25	4976	16.87	-9.06	-0.02
300	SLD 12	-262	25	4976	16.87	-9.06	-0.02
300	SLD 13	-537	-3	2928	-6.57	-22.66	0.01
300	SLD 14	-537	-3	2928	-6.57	-22.66	0.01
300	SLD 15	-684	7	3605	6.79	-28.89	0
300	SLD 16	-684	7	3605	6.79	-28.89	0
300	SLV 1	2341	22	5190	-44.15	108.25	-0.05
300	SLV 2	2341	22	5190	-44.15	108.25	-0.05
300	SLV 3	1992	47	6772	-10.21	93.48	-0.07
300	SLV 4	1992	47	6772	-10.21	93.48	-0.07
300	SLV 5	1398	-24	2025	-70.15	63.92	0
300	SLV 6	1398	-24	2025	-70.15	63.92	0
300	SLV 7	235	61	7298	42.97	14.68	-0.06
300	SLV 8	235	61	7298	42.97	14.68	-0.06
300	SLV 9	241	-38	894	-58.49	11.14	0.03
300	SLV 10	241	-38	894	-58.49	11.14	0.03
300	SLV 11	-923	47	6167	54.62	-38.09	-0.03
300	SLV 12	-923	47	6167	54.62	-38.09	-0.03
300	SLV 13	-1516	-25	1420	-5.31	-67.65	0.04
300	SLV 14	-1516	-25	1420	-5.31	-67.65	0.04
300	SLV 15	-1865	1	3002	28.63	-82.42	0.02
300	SLV 16	-1865	1	3002	28.63	-82.42	0.02
301	SLU 1	152	13	3546	-9.46	7.34	-0.03
301	SLU 2	164	13	3470	-9.63	7.77	-0.03
301	SLU 3	175	14	3658	-9.82	8.43	-0.03
301	SLU 4	182	14	3612	-9.92	8.69	-0.03
301	SLU 5	188	14	3556	-9.89	8.92	-0.03
301	SLU 6	200	14	3743	-10.08	9.58	-0.03
301	SLU 7	207	14	3697	-10.18	9.84	-0.03

Nodo	Cont.	Reazione a traslazione			Reazione a rotazione		
Ind.	N.br.	x	y	z	x	y	z
301	SLU 8	201	14	3717	-9.98	9.64	-0.03
301	SLU 9	208	14	3671	-10.09	9.9	-0.03
301	SLU 10	198	14	3921	-10.54	9.28	-0.03
301	SLU 11	209	15	4109	-10.72	9.93	-0.03
301	SLU 12	216	15	4063	-10.83	10.19	-0.03
301	SLU 13	222	15	4006	-10.8	10.43	-0.03
301	SLU 14	233	15	4194	-10.98	11.09	-0.03
301	SLU 15	240	15	4148	-11.09	11.35	-0.03
301	SLU 16	235	15	4167	-10.89	11.15	-0.03
301	SLU 17	242	15	4122	-10.99	11.41	-0.03
301	SLU 18	200	15	4190	-10.76	9.49	-0.03
301	SLU 19	207	15	4145	-10.86	9.75	-0.03
301	SLU 20	225	15	4275	-11.02	10.64	-0.03
301	SLU 21	232	15	4230	-11.12	10.9	-0.03
301	SLU 22	190	14	3988	-10.44	9.07	-0.03
301	SLU 23	202	15	3912	-10.61	9.5	-0.03
301	SLU 24	213	15	4100	-10.79	10.15	-0.03
301	SLU 25	220	15	4054	-10.9	10.41	-0.03
301	SLU 26	226	15	3998	-10.87	10.65	-0.03
301	SLU 27	238	15	4185	-11.05	11.31	-0.03
301	SLU 28	245	15	4140	-11.16	11.57	-0.03
301	SLU 29	239	15	4159	-10.96	11.37	-0.03
301	SLU 30	246	15	4113	-11.06	11.63	-0.03
301	SLU 31	236	16	4363	-11.51	11.01	-0.03
301	SLU 32	247	16	4551	-11.7	11.66	-0.03
301	SLU 33	254	16	4505	-11.8	11.92	-0.03
301	SLU 34	260	16	4448	-11.78	12.16	-0.03
301	SLU 35	271	17	4636	-11.96	12.81	-0.03
301	SLU 36	278	17	4590	-12.06	13.07	-0.03
301	SLU 37	273	17	4609	-11.86	12.88	-0.03
301	SLU 38	280	17	4564	-11.97	13.14	-0.03
301	SLU 39	238	16	4632	-11.73	11.22	-0.03
301	SLU 40	245	16	4587	-11.83	11.48	-0.03
301	SLU 41	263	17	4717	-11.99	12.37	-0.03
301	SLU 42	270	17	4672	-12.1	12.63	-0.03
301	SLU 43	185	16	4458	-11.96	8.95	-0.03
301	SLU 44	197	17	4383	-12.14	9.38	-0.03
301	SLU 45	208	17	4570	-12.32	10.04	-0.03
301	SLU 46	215	17	4525	-12.42	10.3	-0.03
301	SLU 47	221	17	4468	-12.4	10.53	-0.03
301	SLU 48	232	17	4655	-12.58	11.19	-0.03
301	SLU 49	239	17	4610	-12.68	11.45	-0.03
301	SLU 50	234	17	4629	-12.49	11.25	-0.03
301	SLU 51	241	17	4583	-12.59	11.51	-0.03
301	SLU 52	230	18	4833	-13.04	10.89	-0.04
301	SLU 53	241	18	5021	-13.23	11.54	-0.04
301	SLU 54	248	18	4975	-13.33	11.8	-0.04
301	SLU 55	255	18	4919	-13.3	12.04	-0.04
301	SLU 56	266	19	5106	-13.49	12.7	-0.04
301	SLU 57	273	19	5060	-13.59	12.96	-0.04
301	SLU 58	267	19	5080	-13.39	12.76	-0.04
301	SLU 59	274	19	5034	-13.5	13.02	-0.04
301	SLU 60	233	18	5102	-13.26	11.1	-0.04
301	SLU 61	240	18	5057	-13.36	11.36	-0.04
301	SLU 62	257	19	5188	-13.52	12.25	-0.04
301	SLU 63	264	19	5142	-13.62	12.51	-0.04
301	SLU 64	223	18	4901	-12.94	10.68	-0.04
301	SLU 65	235	18	4825	-13.11	11.11	-0.04
301	SLU 66	246	18	5012	-13.3	11.76	-0.04
301	SLU 67	253	18	4967	-13.4	12.02	-0.04
301	SLU 68	259	18	4910	-13.37	12.26	-0.04
301	SLU 69	270	19	5097	-13.56	12.92	-0.04
301	SLU 70	277	19	5052	-13.66	13.18	-0.04
301	SLU 71	272	19	5071	-13.46	12.98	-0.04
301	SLU 72	279	19	5025	-13.56	13.24	-0.04
301	SLU 73	268	19	5276	-14.02	12.62	-0.04
301	SLU 74	279	20	5463	-14.2	13.27	-0.04
301	SLU 75	286	20	5417	-14.31	13.53	-0.04
301	SLU 76	293	20	5361	-14.28	13.77	-0.04
301	SLU 77	304	20	5548	-14.46	14.42	-0.04
301	SLU 78	311	20	5503	-14.57	14.68	-0.04
301	SLU 79	305	20	5522	-14.37	14.49	-0.04
301	SLU 80	312	20	5476	-14.47	14.75	-0.04
301	SLU 81	271	20	5545	-14.23	12.83	-0.04
301	SLU 82	278	20	5499	-14.34	13.09	-0.04
301	SLU 83	295	20	5630	-14.5	13.98	-0.04
301	SLU 84	302	20	5584	-14.6	14.24	-0.04
301	SLE RA 1	163	13	3673	-9.74	7.83	-0.03
301	SLE RA 2	171	13	3622	-9.85	8.12	-0.03
301	SLE RA 3	178	14	3747	-9.98	8.56	-0.03
301	SLE RA 4	183	14	3717	-10.05	8.73	-0.03
301	SLE RA 5	187	14	3679	-10.03	8.89	-0.03
301	SLE RA 6	195	14	3804	-10.15	9.33	-0.03
301	SLE RA 7	199	14	3773	-10.22	9.5	-0.03
301	SLE RA 8	196	14	3786	-10.09	9.37	-0.03
301	SLE RA 9	200	14	3756	-10.16	9.54	-0.03
301	SLE RA 10	193	14	3922	-10.46	9.13	-0.03
301	SLE RA 11	201	15	4047	-10.58	9.56	-0.03
301	SLE RA 12	205	15	4017	-10.65	9.74	-0.03
301	SLE RA 13	210	15	3979	-10.63	9.89	-0.03
301	SLE RA 14	217	15	4104	-10.76	10.33	-0.03

Nodo	Cont.	Reazione a traslazione			Reazione a rotazione		
Ind.	N.br.	x	y	z	x	y	z
301	SLE RA 15	222	15	4074	-10.82	10.5	-0.03
301	SLE RA 16	218	15	4087	-10.69	10.37	-0.03
301	SLE RA 17	223	15	4056	-10.76	10.55	-0.03
301	SLE RA 18	195	15	4102	-10.6	9.27	-0.03
301	SLE RA 19	200	15	4071	-10.67	9.44	-0.03
301	SLE RA 20	211	15	4159	-10.78	10.04	-0.03
301	SLE RA 21	216	15	4128	-10.85	10.21	-0.03
301	SLE FR 1	163	13	3673	-9.74	7.83	-0.03
301	SLE FR 2	164	13	3662	-9.76	7.89	-0.03
301	SLE FR 3	169	14	3695	-9.81	8.14	-0.03
301	SLE FR 4	174	14	3791	-10.02	8.32	-0.03
301	SLE FR 5	179	14	3824	-10.07	8.57	-0.03
301	SLE FR 6	179	14	3887	-10.17	8.55	-0.03
301	SLE QP 1	163	13	3673	-9.74	7.83	-0.03
301	SLE QP 2	172	14	3801	-10	8.26	-0.03
301	SLD 1	1164	16	4143	-28.32	52.77	-0.03
301	SLD 2	1164	16	4143	-28.32	52.77	-0.03
301	SLD 3	1013	32	4705	-10.49	46.34	-0.05
301	SLD 4	1013	32	4705	-10.49	46.34	-0.05
301	SLD 5	699	-9	3052	-42.53	31.36	0.01
301	SLD 6	699	-9	3052	-42.53	31.36	0.01
301	SLD 7	196	43	4924	16.89	9.94	-0.07
301	SLD 8	196	43	4924	16.89	9.94	-0.07
301	SLD 9	149	-15	2678	-36.89	6.59	0.01
301	SLD 10	149	-15	2678	-36.89	6.59	0.01
301	SLD 11	-354	37	4551	22.54	-14.83	-0.06
301	SLD 12	-354	37	4551	22.54	-14.83	-0.06
301	SLD 13	-668	-4	2897	-9.5	-29.81	0
301	SLD 14	-668	-4	2897	-9.5	-29.81	0
301	SLD 15	-819	12	3459	8.32	-36.24	-0.02
301	SLD 16	-819	12	3459	8.32	-36.24	-0.02
301	SLV 1	2435	19	4561	-55.95	109.78	-0.04
301	SLV 2	2435	19	4561	-55.95	109.78	-0.04
301	SLV 3	2077	58	5875	-10.68	94.51	-0.09
301	SLV 4	2077	58	5875	-10.68	94.51	-0.09
301	SLV 5	1395	-44	2036	-92.45	61.89	0.06
301	SLV 6	1395	-44	2036	-92.45	61.89	0.06
301	SLV 7	200	87	6417	58.47	10.96	-0.13
301	SLV 8	200	87	6417	58.47	10.96	-0.13
301	SLV 9	145	-59	1186	-78.46	5.56	0.08
301	SLV 10	145	-59	1186	-78.46	5.56	0.08
301	SLV 11	-1050	72	5567	72.46	-45.37	-0.11
301	SLV 12	-1050	72	5567	72.46	-45.37	-0.11
301	SLV 13	-1732	-31	1727	-9.32	-77.98	0.04
301	SLV 14	-1732	-31	1727	-9.32	-77.98	0.04
301	SLV 15	-2090	9	3042	35.96	-93.26	-0.02
301	SLV 16	-2090	9	3042	35.96	-93.26	-0.02
302	SLU 1	184	14	3357	-10.93	9.84	-0.04
302	SLU 2	194	14	3298	-11.08	10.19	-0.04
302	SLU 3	211	15	3456	-11.34	11.12	-0.04
302	SLU 4	217	15	3421	-11.43	11.33	-0.04
302	SLU 5	222	15	3371	-11.37	11.5	-0.04
302	SLU 6	239	15	3530	-11.63	12.43	-0.04
302	SLU 7	245	15	3495	-11.72	12.64	-0.04
302	SLU 8	240	15	3505	-11.51	12.46	-0.04
302	SLU 9	246	15	3469	-11.6	12.67	-0.04
302	SLU 10	231	16	3730	-12.13	12.02	-0.04
302	SLU 11	248	16	3889	-12.39	12.95	-0.04
302	SLU 12	254	16	3853	-12.48	13.16	-0.04
302	SLU 13	259	16	3804	-12.42	13.33	-0.04
302	SLU 14	276	17	3963	-12.68	14.26	-0.04
302	SLU 15	282	17	3927	-12.77	14.47	-0.04
302	SLU 16	277	16	3937	-12.56	14.29	-0.04
302	SLU 17	283	16	3901	-12.65	14.5	-0.04
302	SLU 18	236	16	3975	-12.43	12.45	-0.04
302	SLU 19	242	16	3939	-12.52	12.66	-0.04
302	SLU 20	264	17	4049	-12.72	13.76	-0.04
302	SLU 21	270	17	4013	-12.81	13.97	-0.04
302	SLU 22	227	16	3779	-12.06	11.93	-0.04
302	SLU 23	237	16	3719	-12.21	12.28	-0.04
302	SLU 24	254	16	3878	-12.47	13.21	-0.04
302	SLU 25	260	16	3842	-12.56	13.42	-0.04
302	SLU 26	265	16	3793	-12.5	13.59	-0.04
302	SLU 27	282	17	3952	-12.75	14.52	-0.04
302	SLU 28	288	17	3916	-12.84	14.73	-0.04
302	SLU 29	283	17	3926	-12.64	14.55	-0.04
302	SLU 30	289	17	3891	-12.73	14.76	-0.04
302	SLU 31	273	17	4152	-13.26	14.11	-0.04
302	SLU 32	290	18	4310	-13.52	15.03	-0.05
302	SLU 33	296	18	4275	-13.61	15.25	-0.05
302	SLU 34	301	18	4225	-13.55	15.42	-0.05
302	SLU 35	318	18	4384	-13.8	16.34	-0.05
302	SLU 36	324	18	4349	-13.89	16.55	-0.05
302	SLU 37	319	18	4359	-13.69	16.38	-0.05
302	SLU 38	325	18	4323	-13.78	16.59	-0.05
302	SLU 39	279	18	4396	-13.56	14.54	-0.05
302	SLU 40	285	18	4361	-13.65	14.75	-0.05
302	SLU 41	307	18	4470	-13.85	15.85	-0.05
302	SLU 42	313	18	4434	-13.94	16.06	-0.05
302	SLU 43	225	18	4220	-13.83	12.08	-0.05
302	SLU 44	235	18	4160	-13.98	12.43	-0.05

Nodo	Cont.	Reazione a traslazione			Reazione a rotazione		
Ind.	N.br.	x	y	z	x	y	z
302	SLU 45	252	18	4319	-14.23	13.36	-0.05
302	SLU 46	258	18	4283	-14.32	13.57	-0.05
302	SLU 47	263	18	4234	-14.27	13.74	-0.05
302	SLU 48	280	19	4393	-14.52	14.67	-0.05
302	SLU 49	286	19	4357	-14.61	14.88	-0.05
302	SLU 50	281	19	4367	-14.41	14.7	-0.05
302	SLU 51	287	19	4332	-14.5	14.91	-0.05
302	SLU 52	271	19	4593	-15.03	14.26	-0.05
302	SLU 53	289	20	4751	-15.28	15.18	-0.05
302	SLU 54	295	20	4716	-15.37	15.39	-0.05
302	SLU 55	300	20	4666	-15.32	15.57	-0.05
302	SLU 56	317	20	4825	-15.57	16.49	-0.05
302	SLU 57	323	20	4790	-15.66	16.7	-0.05
302	SLU 58	318	20	4800	-15.46	16.53	-0.05
302	SLU 59	324	20	4764	-15.55	16.74	-0.05
302	SLU 60	277	20	4837	-15.33	14.69	-0.05
302	SLU 61	283	20	4802	-15.42	14.9	-0.05
302	SLU 62	305	20	4911	-15.62	16	-0.05
302	SLU 63	311	20	4875	-15.71	16.21	-0.05
302	SLU 64	267	19	4641	-14.96	14.17	-0.05
302	SLU 65	277	19	4582	-15.11	14.52	-0.05
302	SLU 66	294	20	4740	-15.36	15.45	-0.05
302	SLU 67	300	20	4705	-15.45	15.66	-0.05
302	SLU 68	305	20	4656	-15.4	15.83	-0.05
302	SLU 69	323	20	4814	-15.65	16.75	-0.05
302	SLU 70	328	20	4779	-15.74	16.97	-0.05
302	SLU 71	324	20	4789	-15.53	16.79	-0.05
302	SLU 72	330	20	4753	-15.62	17	-0.05
302	SLU 73	314	21	5014	-16.16	16.35	-0.05
302	SLU 74	331	21	5173	-16.41	17.27	-0.06
302	SLU 75	337	21	5137	-16.5	17.48	-0.06
302	SLU 76	342	21	5088	-16.45	17.66	-0.06
302	SLU 77	359	22	5247	-16.7	18.58	-0.06
302	SLU 78	365	22	5211	-16.79	18.79	-0.06
302	SLU 79	360	22	5221	-16.58	18.61	-0.06
302	SLU 80	366	22	5186	-16.67	18.82	-0.06
302	SLU 81	320	21	5259	-16.46	16.78	-0.06
302	SLU 82	326	22	5223	-16.55	16.99	-0.06
302	SLU 83	348	22	5333	-16.74	18.09	-0.06
302	SLU 84	354	22	5297	-16.84	18.3	-0.06
302	SLE RA 1	196	15	3477	-11.26	10.44	-0.04
302	SLE RA 2	203	15	3438	-11.36	10.67	-0.04
302	SLE RA 3	214	15	3544	-11.53	11.29	-0.04
302	SLE RA 4	218	15	3520	-11.59	11.43	-0.04
302	SLE RA 5	222	15	3487	-11.55	11.55	-0.04
302	SLE RA 6	233	15	3593	-11.72	12.16	-0.04
302	SLE RA 7	237	15	3569	-11.78	12.3	-0.04
302	SLE RA 8	234	15	3576	-11.64	12.19	-0.04
302	SLE RA 9	238	15	3552	-11.7	12.33	-0.04
302	SLE RA 10	227	16	3726	-12.06	11.89	-0.04
302	SLE RA 11	239	16	3832	-12.23	12.51	-0.04
302	SLE RA 12	243	16	3808	-12.29	12.65	-0.04
302	SLE RA 13	246	16	3775	-12.25	12.76	-0.04
302	SLE RA 14	257	16	3881	-12.42	13.38	-0.04
302	SLE RA 15	261	16	3857	-12.48	13.52	-0.04
302	SLE RA 16	258	16	3864	-12.34	13.4	-0.04
302	SLE RA 17	262	16	3840	-12.4	13.54	-0.04
302	SLE RA 18	231	16	3889	-12.26	12.18	-0.04
302	SLE RA 19	235	16	3865	-12.32	12.32	-0.04
302	SLE RA 20	250	16	3938	-12.45	13.05	-0.04
302	SLE RA 21	254	16	3915	-12.51	13.19	-0.04
302	SLE FR 1	196	15	3477	-11.26	10.44	-0.04
302	SLE FR 2	198	15	3469	-11.28	10.49	-0.04
302	SLE FR 3	204	15	3497	-11.33	10.79	-0.04
302	SLE FR 4	208	15	3593	-11.58	11.01	-0.04
302	SLE FR 5	214	15	3621	-11.63	11.31	-0.04
302	SLE FR 6	214	15	3683	-11.76	11.31	-0.04
302	SLE QP 1	196	15	3477	-11.26	10.44	-0.04
302	SLE QP 2	207	15	3601	-11.56	10.96	-0.04
302	SLD 1	1275	16	3881	-32.72	51.84	-0.04
302	SLD 2	1275	16	3881	-32.72	51.84	-0.04
302	SLD 3	1119	36	4358	-11.46	58.6	-0.09
302	SLD 4	1119	36	4358	-11.46	58.6	-0.09
302	SLD 5	764	-15	2961	-50.15	12.97	0.03
302	SLD 6	764	-15	2961	-50.15	12.97	0.03
302	SLD 7	244	51	4552	20.72	35.51	-0.12
302	SLD 8	244	51	4552	20.72	35.51	-0.12
302	SLD 9	170	-21	2650	-43.83	-13.58	0.05
302	SLD 10	170	-21	2650	-43.83	-13.58	0.05
302	SLD 11	-350	45	4241	27.04	8.95	-0.11
302	SLD 12	-350	45	4241	27.04	8.95	-0.11
302	SLD 13	-705	-6	2844	-11.66	-36.67	0.01
302	SLD 14	-705	-6	2844	-11.66	-36.67	0.01
302	SLD 15	-861	14	3321	9.6	-29.91	-0.03
302	SLD 16	-861	14	3321	9.6	-29.91	-0.03
302	SLV 1	2643	16	4219	-64.67	103.55	-0.05
302	SLV 2	2643	16	4219	-64.67	103.55	-0.05
302	SLV 3	2273	67	5342	-10.69	119.61	-0.16
302	SLV 4	2273	67	5342	-10.69	119.61	-0.16
302	SLV 5	1500	-61	2084	-109.36	14.37	0.13
302	SLV 6	1500	-61	2084	-109.36	14.37	0.13

Nodo	Cont.	Reazione a traslazione			Reazione a rotazione		
Ind.	N.br.	x	y	z	x	y	z
302	SLV 7	265	107	5825	70.57	67.92	-0.25
302	SLV 8	265	107	5825	70.57	67.92	-0.25
302	SLV 9	149	-77	1377	-93.69	-46	0.17
302	SLV 10	149	-77	1377	-93.69	-46	0.17
302	SLV 11	-1086	91	5118	86.25	7.55	-0.21
302	SLV 12	-1086	91	5118	86.25	7.55	-0.21
302	SLV 13	-1859	-37	1860	-12.42	-97.69	0.09
302	SLV 14	-1859	-37	1860	-12.42	-97.69	0.09
302	SLV 15	-2230	14	2983	41.56	-81.62	-0.03
302	SLV 16	-2230	14	2983	41.56	-81.62	-0.03
303	SLU 1	229	15	3283	-12.05	9.38	-0.04
303	SLU 2	237	15	3237	-12.18	9.67	-0.04
303	SLU 3	260	16	3377	-12.48	10.74	-0.04
303	SLU 4	265	16	3349	-12.56	10.91	-0.04
303	SLU 5	268	16	3305	-12.48	11.06	-0.04
303	SLU 6	291	16	3445	-12.79	12.13	-0.04
303	SLU 7	296	16	3417	-12.86	12.3	-0.04
303	SLU 8	292	16	3419	-12.66	12.17	-0.04
303	SLU 9	296	16	3391	-12.73	12.34	-0.04
303	SLU 10	278	17	3667	-13.36	11.3	-0.04
303	SLU 11	301	17	3807	-13.67	12.38	-0.04
303	SLU 12	305	17	3779	-13.75	12.55	-0.04
303	SLU 13	309	17	3735	-13.67	12.7	-0.04
303	SLU 14	332	18	3875	-13.97	13.77	-0.05
303	SLU 15	336	18	3847	-14.05	13.94	-0.05
303	SLU 16	332	17	3849	-13.84	13.8	-0.05
303	SLU 17	337	18	3821	-13.92	13.97	-0.05
303	SLU 18	287	17	3897	-13.74	11.72	-0.04
303	SLU 19	292	17	3869	-13.82	11.89	-0.04
303	SLU 20	319	18	3965	-14.05	13.11	-0.05
303	SLU 21	323	18	3937	-14.12	13.28	-0.05
303	SLU 22	277	17	3700	-13.32	11.36	-0.04
303	SLU 23	285	17	3654	-13.44	11.64	-0.04
303	SLU 24	308	17	3794	-13.75	12.72	-0.04
303	SLU 25	312	17	3766	-13.82	12.88	-0.04
303	SLU 26	316	17	3722	-13.75	13.03	-0.04
303	SLU 27	339	18	3862	-14.05	14.11	-0.05
303	SLU 28	344	18	3834	-14.13	14.28	-0.05
303	SLU 29	339	18	3836	-13.92	14.14	-0.05
303	SLU 30	344	18	3808	-14	14.31	-0.05
303	SLU 31	325	18	4084	-14.63	13.28	-0.05
303	SLU 32	348	19	4224	-14.93	14.35	-0.05
303	SLU 33	353	19	4196	-15.01	14.52	-0.05
303	SLU 34	357	19	4152	-14.93	14.67	-0.05
303	SLU 35	380	19	4292	-15.23	15.74	-0.05
303	SLU 36	384	19	4264	-15.31	15.91	-0.05
303	SLU 37	380	19	4266	-15.1	15.78	-0.05
303	SLU 38	385	19	4238	-15.18	15.95	-0.05
303	SLU 39	335	19	4314	-15.01	13.69	-0.05
303	SLU 40	340	19	4287	-15.08	13.86	-0.05
303	SLU 41	366	19	4382	-15.31	15.09	-0.05
303	SLU 42	371	19	4354	-15.39	15.26	-0.05
303	SLU 43	282	19	4125	-15.24	11.52	-0.05
303	SLU 44	289	19	4079	-15.36	11.81	-0.05
303	SLU 45	312	20	4219	-15.67	12.88	-0.05
303	SLU 46	317	20	4191	-15.74	13.05	-0.05
303	SLU 47	320	20	4147	-15.66	13.2	-0.05
303	SLU 48	344	20	4287	-15.97	14.27	-0.05
303	SLU 49	348	20	4259	-16.05	14.44	-0.05
303	SLU 50	344	20	4261	-15.84	14.31	-0.05
303	SLU 51	349	20	4233	-15.92	14.48	-0.05
303	SLU 52	330	21	4509	-16.55	13.44	-0.05
303	SLU 53	353	21	4649	-16.85	14.52	-0.05
303	SLU 54	358	21	4621	-16.93	14.69	-0.05
303	SLU 55	361	21	4577	-16.85	14.83	-0.05
303	SLU 56	384	22	4717	-17.15	15.91	-0.06
303	SLU 57	389	22	4689	-17.23	16.08	-0.06
303	SLU 58	385	21	4691	-17.02	15.94	-0.06
303	SLU 59	389	21	4663	-17.1	16.11	-0.06
303	SLU 60	340	21	4739	-16.93	13.86	-0.06
303	SLU 61	344	21	4711	-17	14.03	-0.06
303	SLU 62	371	22	4807	-17.23	15.25	-0.06
303	SLU 63	375	22	4779	-17.31	15.42	-0.06
303	SLU 64	329	21	4542	-16.5	13.5	-0.05
303	SLU 65	337	21	4496	-16.63	13.78	-0.05
303	SLU 66	360	21	4636	-16.93	14.85	-0.06
303	SLU 67	365	21	4608	-17.01	15.02	-0.06
303	SLU 68	368	21	4564	-16.93	15.17	-0.05
303	SLU 69	391	22	4704	-17.23	16.25	-0.06
303	SLU 70	396	22	4676	-17.31	16.42	-0.06
303	SLU 71	392	22	4678	-17.1	16.28	-0.06
303	SLU 72	396	22	4650	-17.18	16.45	-0.06
303	SLU 73	378	22	4926	-17.81	15.42	-0.06
303	SLU 74	401	23	5066	-18.12	16.49	-0.06
303	SLU 75	405	23	5038	-18.19	16.66	-0.06
303	SLU 76	409	23	4994	-18.11	16.81	-0.06
303	SLU 77	432	23	5134	-18.42	17.88	-0.06
303	SLU 78	437	23	5106	-18.49	18.05	-0.06
303	SLU 79	432	23	5108	-18.29	17.92	-0.06
303	SLU 80	437	23	5080	-18.36	18.09	-0.06
303	SLU 81	388	23	5156	-18.19	15.83	-0.06

Nodo	Cont.	Reazione a traslazione			Reazione a rotazione		
Ind.	N.br.	x	y	z	x	y	z
303	SLU 82	392	23	5129	-18.27	16	-0.06
303	SLU 83	419	23	5224	-18.49	17.23	-0.06
303	SLU 84	423	23	5196	-18.57	17.4	-0.06
303	SLE RA 1	243	16	3403	-12.41	9.95	-0.04
303	SLE RA 2	248	16	3372	-12.5	10.14	-0.04
303	SLE RA 3	263	16	3465	-12.7	10.85	-0.04
303	SLE RA 4	266	16	3446	-12.75	10.97	-0.04
303	SLE RA 5	269	16	3417	-12.7	11.07	-0.04
303	SLE RA 6	284	16	3510	-12.9	11.78	-0.04
303	SLE RA 7	287	16	3492	-12.95	11.89	-0.04
303	SLE RA 8	284	16	3493	-12.82	11.8	-0.04
303	SLE RA 9	288	16	3475	-12.87	11.92	-0.04
303	SLE RA 10	275	17	3658	-13.29	11.23	-0.04
303	SLE RA 11	290	17	3751	-13.49	11.94	-0.04
303	SLE RA 12	294	17	3733	-13.54	12.06	-0.04
303	SLE RA 13	296	17	3703	-13.49	12.16	-0.04
303	SLE RA 14	311	17	3797	-13.69	12.87	-0.04
303	SLE RA 15	314	17	3778	-13.74	12.98	-0.04
303	SLE RA 16	312	17	3779	-13.61	12.9	-0.04
303	SLE RA 17	315	17	3761	-13.66	13.01	-0.04
303	SLE RA 18	282	17	3812	-13.54	11.51	-0.04
303	SLE RA 19	285	17	3793	-13.59	11.62	-0.04
303	SLE RA 20	302	17	3857	-13.74	12.43	-0.04
303	SLE RA 21	305	17	3838	-13.79	12.55	-0.04
303	SLE FR 1	243	16	3403	-12.41	9.95	-0.04
303	SLE FR 2	244	16	3396	-12.43	9.99	-0.04
303	SLE FR 3	251	16	3421	-12.49	10.32	-0.04
303	SLE FR 4	256	16	3519	-12.77	10.45	-0.04
303	SLE FR 5	263	16	3543	-12.83	10.79	-0.04
303	SLE FR 6	262	16	3607	-12.98	10.73	-0.04
303	SLE QP 1	243	16	3403	-12.41	9.95	-0.04
303	SLE QP 2	254	16	3525	-12.75	10.42	-0.04
303	SLD 1	1215	38	3810	-35.45	53.06	-0.04
303	SLD 2	1215	38	3810	-35.45	53.06	-0.04
303	SLD 3	1373	16	4230	-12.27	59.92	-0.1
303	SLD 4	1373	16	4230	-12.27	59.92	-0.1
303	SLD 5	302	56	2974	-54.73	12.8	0.04
303	SLD 6	302	56	2974	-54.73	12.8	0.04
303	SLD 7	830	-18	4373	22.56	35.67	-0.14
303	SLD 8	830	-18	4373	22.56	35.67	-0.14
303	SLD 9	-321	50	2677	-48.06	-14.84	0.06
303	SLD 10	-321	50	2677	-48.06	-14.84	0.06
303	SLD 11	207	-24	4077	29.22	8.03	-0.12
303	SLD 12	207	-24	4077	29.22	8.03	-0.12
303	SLD 13	-864	16	2821	-13.24	-39.09	0.01
303	SLD 14	-864	16	2821	-13.24	-39.09	0.01
303	SLD 15	-706	-6	3241	9.95	-32.23	-0.04
303	SLD 16	-706	-6	3241	9.95	-32.23	-0.04
303	SLV 1	2430	72	4153	-69.71	107.01	-0.04
303	SLV 2	2430	72	4153	-69.71	107.01	-0.04
303	SLV 3	2806	16	5146	-10.87	123.34	-0.18
303	SLV 4	2806	16	5146	-10.87	123.34	-0.18
303	SLV 5	337	118	2208	-119.08	14.62	0.17
303	SLV 6	337	118	2208	-119.08	14.62	0.17
303	SLV 7	1590	-70	5517	77.05	69.06	-0.29
303	SLV 8	1590	-70	5517	77.05	69.06	-0.29
303	SLV 9	-1081	102	1533	-102.56	-48.23	0.21
303	SLV 10	-1081	102	1533	-102.56	-48.23	0.21
303	SLV 11	172	-86	4843	93.57	6.21	-0.25
303	SLV 12	172	-86	4843	93.57	6.21	-0.25
303	SLV 13	-2297	16	1905	-14.64	-102.51	0.09
303	SLV 14	-2297	16	1905	-14.64	-102.51	0.09
303	SLV 15	-1921	-40	2898	44.2	-86.18	-0.04
303	SLV 16	-1921	-40	2898	44.2	-86.18	-0.04
304	SLU 1	311	17	3347	-12.98	14.07	-0.04
304	SLU 2	316	17	3311	-13.08	14.24	-0.04
304	SLU 3	346	17	3440	-13.44	15.62	-0.04
304	SLU 4	349	17	3419	-13.5	15.72	-0.04
304	SLU 5	350	17	3377	-13.39	15.76	-0.04
304	SLU 6	379	18	3506	-13.75	17.14	-0.05
304	SLU 7	382	18	3485	-13.81	17.24	-0.05
304	SLU 8	379	17	3479	-13.6	17.12	-0.05
304	SLU 9	382	17	3458	-13.66	17.21	-0.05
304	SLU 10	367	18	3757	-14.42	16.5	-0.05
304	SLU 11	396	19	3886	-14.77	17.88	-0.05
304	SLU 12	399	19	3865	-14.83	17.98	-0.05
304	SLU 13	401	19	3823	-14.73	18.02	-0.05
304	SLU 14	430	19	3953	-15.08	19.4	-0.05
304	SLU 15	433	19	3931	-15.14	19.5	-0.05
304	SLU 16	429	19	3925	-14.94	19.38	-0.05
304	SLU 17	432	19	3904	-15	19.48	-0.05
304	SLU 18	384	19	3984	-14.89	17.31	-0.05
304	SLU 19	387	19	3963	-14.95	17.41	-0.05
304	SLU 20	417	20	4050	-15.2	18.83	-0.05
304	SLU 21	420	20	4029	-15.26	18.93	-0.05
304	SLU 22	369	18	3778	-14.39	16.68	-0.05
304	SLU 23	374	18	3742	-14.49	16.84	-0.05
304	SLU 24	404	19	3872	-14.84	18.22	-0.05
304	SLU 25	407	19	3850	-14.9	18.32	-0.05
304	SLU 26	408	19	3809	-14.8	18.36	-0.05
304	SLU 27	438	20	3938	-15.15	19.74	-0.05

Nodo	Cont.	Reazione a traslazione			Reazione a rotazione		
Ind.	N.br.	x	y	z	x	y	z
304	SLU 28	440	20	3917	-15.21	19.84	-0.05
304	SLU 29	437	19	3911	-15.01	19.72	-0.05
304	SLU 30	440	19	3889	-15.07	19.82	-0.05
304	SLU 31	425	20	4189	-15.82	19.1	-0.05
304	SLU 32	454	21	4318	-16.18	20.49	-0.05
304	SLU 33	457	21	4297	-16.24	20.58	-0.05
304	SLU 34	459	21	4255	-16.13	20.62	-0.05
304	SLU 35	488	21	4384	-16.49	22.01	-0.06
304	SLU 36	491	21	4363	-16.55	22.1	-0.06
304	SLU 37	488	21	4357	-16.34	21.98	-0.06
304	SLU 38	491	21	4335	-16.4	22.08	-0.06
304	SLU 39	442	21	4416	-16.29	19.91	-0.05
304	SLU 40	445	21	4394	-16.35	20.01	-0.05
304	SLU 41	476	21	4482	-16.6	21.43	-0.06
304	SLU 42	479	21	4460	-16.66	21.53	-0.06
304	SLU 43	385	21	4203	-16.4	17.4	-0.05
304	SLU 44	389	21	4167	-16.5	17.57	-0.05
304	SLU 45	419	22	4296	-16.85	18.95	-0.06
304	SLU 46	422	22	4275	-16.91	19.05	-0.06
304	SLU 47	423	21	4233	-16.81	19.09	-0.06
304	SLU 48	453	22	4362	-17.16	20.47	-0.06
304	SLU 49	456	22	4341	-17.22	20.57	-0.06
304	SLU 50	452	22	4335	-17.02	20.45	-0.06
304	SLU 51	455	22	4314	-17.08	20.54	-0.06
304	SLU 52	440	23	4613	-17.83	19.83	-0.06
304	SLU 53	470	23	4742	-18.18	21.21	-0.06
304	SLU 54	473	23	4721	-18.25	21.31	-0.06
304	SLU 55	474	23	4679	-18.14	21.35	-0.06
304	SLU 56	503	24	4809	-18.49	22.73	-0.06
304	SLU 57	506	24	4787	-18.56	22.83	-0.06
304	SLU 58	503	24	4781	-18.35	22.71	-0.06
304	SLU 59	506	24	4760	-18.41	22.81	-0.06
304	SLU 60	457	23	4840	-18.3	20.64	-0.06
304	SLU 61	460	23	4818	-18.36	20.74	-0.06
304	SLU 62	491	24	4906	-18.61	22.16	-0.06
304	SLU 63	494	24	4885	-18.67	22.26	-0.06
304	SLU 64	443	23	4634	-17.8	20.01	-0.06
304	SLU 65	448	23	4598	-17.9	20.17	-0.06
304	SLU 66	477	23	4728	-18.26	21.55	-0.06
304	SLU 67	480	23	4706	-18.32	21.65	-0.06
304	SLU 68	481	23	4664	-18.21	21.69	-0.06
304	SLU 69	511	24	4794	-18.57	23.07	-0.06
304	SLU 70	514	24	4773	-18.63	23.17	-0.06
304	SLU 71	510	24	4767	-18.42	23.05	-0.06
304	SLU 72	513	24	4745	-18.48	23.15	-0.06
304	SLU 73	498	25	5044	-19.24	22.43	-0.06
304	SLU 74	528	25	5174	-19.59	23.82	-0.07
304	SLU 75	531	25	5153	-19.65	23.91	-0.07
304	SLU 76	532	25	5111	-19.55	23.95	-0.07
304	SLU 77	562	26	5240	-19.9	25.34	-0.07
304	SLU 78	565	26	5219	-19.96	25.43	-0.07
304	SLU 79	561	25	5213	-19.76	25.31	-0.07
304	SLU 80	564	25	5191	-19.82	25.41	-0.07
304	SLU 81	515	25	5272	-19.71	23.24	-0.07
304	SLU 82	518	25	5250	-19.77	23.34	-0.07
304	SLU 83	549	26	5338	-20.02	24.76	-0.07
304	SLU 84	552	26	5316	-20.08	24.86	-0.07
304	SLE RA 1	328	17	3470	-13.39	14.82	-0.04
304	SLE RA 2	331	17	3446	-13.45	14.93	-0.04
304	SLE RA 3	351	18	3532	-13.69	15.85	-0.05
304	SLE RA 4	353	18	3518	-13.73	15.91	-0.05
304	SLE RA 5	354	17	3490	-13.66	15.94	-0.05
304	SLE RA 6	373	18	3577	-13.9	16.86	-0.05
304	SLE RA 7	375	18	3562	-13.94	16.93	-0.05
304	SLE RA 8	373	18	3558	-13.8	16.85	-0.05
304	SLE RA 9	375	18	3544	-13.84	16.91	-0.05
304	SLE RA 10	365	18	3743	-14.34	16.43	-0.05
304	SLE RA 11	385	19	3830	-14.58	17.36	-0.05
304	SLE RA 12	386	19	3815	-14.62	17.42	-0.05
304	SLE RA 13	387	19	3788	-14.55	17.45	-0.05
304	SLE RA 14	407	19	3874	-14.78	18.37	-0.05
304	SLE RA 15	409	19	3860	-14.82	18.44	-0.05
304	SLE RA 16	407	19	3856	-14.69	18.35	-0.05
304	SLE RA 17	409	19	3841	-14.73	18.42	-0.05
304	SLE RA 18	376	19	3895	-14.65	16.97	-0.05
304	SLE RA 19	378	19	3881	-14.7	17.04	-0.05
304	SLE RA 20	399	19	3939	-14.86	17.99	-0.05
304	SLE RA 21	401	19	3925	-14.9	18.05	-0.05
304	SLE FR 1	328	17	3470	-13.39	14.82	-0.04
304	SLE FR 2	328	17	3465	-13.4	14.84	-0.04
304	SLE FR 3	337	17	3488	-13.47	15.22	-0.04
304	SLE FR 4	343	18	3593	-13.78	15.49	-0.05
304	SLE FR 5	351	18	3615	-13.85	15.87	-0.05
304	SLE FR 6	352	18	3682	-14.02	15.89	-0.05
304	SLE QP 1	328	17	3470	-13.39	14.82	-0.04
304	SLE QP 2	342	18	3597	-13.77	15.46	-0.05
304	SLD 1	1319	40	3922	-36.46	58.93	-0.05
304	SLD 2	1319	40	3922	-36.46	58.93	-0.05
304	SLD 3	1478	18	4305	-13.11	65.96	-0.11
304	SLD 4	1478	18	4305	-13.11	65.96	-0.11
304	SLD 5	394	58	3114	-55.99	17.84	0.04

Nodo	Cont.	Reazione a traslazione			Reazione a rotazione		
Ind.	N.br.	x	y	z	x	y	z
304	SLD 6	394	58	3114	-55.99	17.84	0.04
304	SLD 7	925	-16	4390	21.85	41.28	-0.15
304	SLD 8	925	-16	4390	21.85	41.28	-0.15
304	SLD 9	-240	52	2805	-49.38	-10.35	0.06
304	SLD 10	-240	52	2805	-49.38	-10.35	0.06
304	SLD 11	291	-23	4080	28.46	13.09	-0.13
304	SLD 12	291	-23	4080	28.46	13.09	-0.13
304	SLD 13	-793	18	2890	-14.42	-35.03	0.01
304	SLD 14	-793	18	2890	-14.42	-35.03	0.01
304	SLD 15	-634	-5	3272	8.93	-28	-0.04
304	SLD 16	-634	-5	3272	8.93	-28	-0.04
304	SLV 1	2554	73	4316	-70.65	113.91	-0.05
304	SLV 2	2554	73	4316	-70.65	113.91	-0.05
304	SLV 3	2932	17	5224	-11.43	130.62	-0.19
304	SLV 4	2932	17	5224	-11.43	130.62	-0.19
304	SLV 5	433	120	2436	-120.64	19.64	0.17
304	SLV 6	433	120	2436	-120.64	19.64	0.17
304	SLV 7	1693	-68	5463	76.75	75.37	-0.31
304	SLV 8	1693	-68	5463	76.75	75.37	-0.31
304	SLV 9	-1008	104	1732	-104.28	-44.44	0.22
304	SLV 10	-1008	104	1732	-104.28	-44.44	0.22
304	SLV 11	252	-85	4759	93.11	11.29	-0.26
304	SLV 12	252	-85	4759	93.11	11.29	-0.26
304	SLV 13	-2248	19	1971	-16.1	-99.69	0.1
304	SLV 14	-2248	19	1971	-16.1	-99.69	0.1
304	SLV 15	-1870	-38	2879	43.11	-82.98	-0.04
304	SLV 16	-1870	-38	2879	43.11	-82.98	-0.04
305	SLU 1	318	18	3520	-13.62	11.63	-0.04
305	SLU 2	321	18	3492	-13.69	11.72	-0.04
305	SLU 3	352	19	3617	-14.09	13.09	-0.04
305	SLU 4	354	19	3600	-14.13	13.15	-0.04
305	SLU 5	354	19	3558	-14	13.18	-0.04
305	SLU 6	386	19	3684	-14.4	14.55	-0.05
305	SLU 7	387	19	3667	-14.44	14.61	-0.05
305	SLU 8	385	19	3653	-14.24	14.54	-0.05
305	SLU 9	386	19	3637	-14.29	14.6	-0.05
305	SLU 10	369	20	3970	-15.16	13.47	-0.05
305	SLU 11	401	21	4095	-15.56	14.83	-0.05
305	SLU 12	402	21	4078	-15.61	14.89	-0.05
305	SLU 13	403	21	4036	-15.48	14.92	-0.05
305	SLU 14	434	22	4162	-15.88	16.29	-0.05
305	SLU 15	436	22	4145	-15.92	16.35	-0.05
305	SLU 16	433	21	4132	-15.72	16.28	-0.05
305	SLU 17	435	21	4115	-15.76	16.34	-0.05
305	SLU 18	387	21	4203	-15.73	14.11	-0.05
305	SLU 19	389	21	4186	-15.77	14.17	-0.05
305	SLU 20	421	22	4270	-16.04	15.57	-0.05
305	SLU 21	422	22	4253	-16.08	15.63	-0.05
305	SLU 22	374	21	3981	-15.15	13.76	-0.05
305	SLU 23	377	21	3952	-15.22	13.86	-0.05
305	SLU 24	409	21	4078	-15.62	15.23	-0.05
305	SLU 25	411	21	4061	-15.67	15.29	-0.05
305	SLU 26	411	21	4019	-15.54	15.32	-0.05
305	SLU 27	442	22	4144	-15.94	16.69	-0.05
305	SLU 28	444	22	4127	-15.98	16.75	-0.05
305	SLU 29	441	21	4114	-15.78	16.68	-0.05
305	SLU 30	443	21	4097	-15.82	16.74	-0.05
305	SLU 31	426	23	4430	-16.7	15.6	-0.05
305	SLU 32	457	23	4556	-17.1	16.97	-0.05
305	SLU 33	459	23	4539	-17.14	17.03	-0.05
305	SLU 34	459	23	4497	-17.01	17.06	-0.05
305	SLU 35	491	24	4622	-17.41	18.43	-0.06
305	SLU 36	493	24	4606	-17.45	18.49	-0.06
305	SLU 37	490	24	4592	-17.26	18.42	-0.06
305	SLU 38	492	24	4575	-17.3	18.48	-0.06
305	SLU 39	444	24	4663	-17.26	16.25	-0.06
305	SLU 40	446	24	4647	-17.3	16.31	-0.06
305	SLU 41	477	24	4730	-17.57	17.71	-0.06
305	SLU 42	479	24	4713	-17.62	17.77	-0.06
305	SLU 43	394	23	4418	-17.18	14.38	-0.05
305	SLU 44	396	23	4390	-17.25	14.48	-0.05
305	SLU 45	428	24	4515	-17.65	15.85	-0.06
305	SLU 46	430	24	4498	-17.69	15.91	-0.06
305	SLU 47	430	24	4456	-17.56	15.94	-0.06
305	SLU 48	461	24	4582	-17.96	17.31	-0.06
305	SLU 49	463	24	4565	-18	17.37	-0.06
305	SLU 50	460	24	4551	-17.8	17.3	-0.06
305	SLU 51	462	24	4534	-17.85	17.36	-0.06
305	SLU 52	445	25	4868	-18.72	16.22	-0.06
305	SLU 53	477	26	4993	-19.12	17.59	-0.06
305	SLU 54	478	26	4976	-19.16	17.65	-0.06
305	SLU 55	478	26	4934	-19.04	17.68	-0.06
305	SLU 56	510	26	5060	-19.44	19.05	-0.06
305	SLU 57	512	26	5043	-19.48	19.11	-0.06
305	SLU 58	509	26	5030	-19.28	19.04	-0.06
305	SLU 59	511	26	5013	-19.32	19.1	-0.06
305	SLU 60	463	26	5101	-19.29	16.87	-0.06
305	SLU 61	465	26	5084	-19.33	16.93	-0.06
305	SLU 62	496	27	5168	-19.6	18.33	-0.06
305	SLU 63	498	27	5151	-19.64	18.39	-0.06
305	SLU 64	450	25	4878	-18.71	16.52	-0.06

Nodo	Cont.	Reazione a traslazione			Reazione a rotazione		
Ind.	N.br.	x	y	z	x	y	z
305	SLU 65	453	25	4850	-18.78	16.62	-0.06
305	SLU 66	485	26	4975	-19.18	17.98	-0.06
305	SLU 67	486	26	4959	-19.22	18.04	-0.06
305	SLU 68	487	26	4917	-19.1	18.07	-0.06
305	SLU 69	518	26	5042	-19.5	19.44	-0.06
305	SLU 70	520	26	5025	-19.54	19.5	-0.06
305	SLU 71	517	26	5012	-19.34	19.43	-0.06
305	SLU 72	519	26	4995	-19.38	19.49	-0.06
305	SLU 73	502	27	5328	-20.26	18.36	-0.06
305	SLU 74	533	28	5454	-20.66	19.73	-0.07
305	SLU 75	535	28	5437	-20.7	19.78	-0.07
305	SLU 76	535	28	5395	-20.57	19.82	-0.07
305	SLU 77	567	29	5520	-20.97	21.18	-0.07
305	SLU 78	568	29	5504	-21.01	21.24	-0.07
305	SLU 79	566	28	5490	-20.81	21.17	-0.07
305	SLU 80	567	28	5473	-20.86	21.23	-0.07
305	SLU 81	520	28	5561	-20.82	19	-0.07
305	SLU 82	521	28	5545	-20.86	19.06	-0.07
305	SLU 83	553	29	5628	-21.13	20.46	-0.07
305	SLU 84	555	29	5611	-21.18	20.52	-0.07
305	SLE RA 1	334	19	3651	-14.06	12.24	-0.04
305	SLE RA 2	336	19	3633	-14.1	12.3	-0.04
305	SLE RA 3	357	19	3716	-14.37	13.21	-0.05
305	SLE RA 4	358	19	3705	-14.4	13.25	-0.05
305	SLE RA 5	358	19	3677	-14.31	13.27	-0.05
305	SLE RA 6	379	20	3761	-14.58	14.19	-0.05
305	SLE RA 7	380	20	3749	-14.61	14.23	-0.05
305	SLE RA 8	378	20	3741	-14.47	14.18	-0.05
305	SLE RA 9	380	20	3729	-14.5	14.22	-0.05
305	SLE RA 10	368	20	3951	-15.09	13.46	-0.05
305	SLE RA 11	389	21	4035	-15.35	14.37	-0.05
305	SLE RA 12	390	21	4024	-15.38	14.41	-0.05
305	SLE RA 13	391	21	3996	-15.3	14.43	-0.05
305	SLE RA 14	412	21	4079	-15.56	15.35	-0.05
305	SLE RA 15	413	21	4068	-15.59	15.39	-0.05
305	SLE RA 16	411	21	4059	-15.46	15.34	-0.05
305	SLE RA 17	412	21	4048	-15.49	15.38	-0.05
305	SLE RA 18	380	21	4107	-15.46	13.89	-0.05
305	SLE RA 19	381	21	4095	-15.49	13.93	-0.05
305	SLE RA 20	402	21	4151	-15.67	14.87	-0.05
305	SLE RA 21	404	21	4140	-15.7	14.91	-0.05
305	SLE FR 1	334	19	3651	-14.06	12.24	-0.04
305	SLE FR 2	334	19	3648	-14.07	12.25	-0.04
305	SLE FR 3	343	19	3669	-14.14	12.62	-0.04
305	SLE FR 4	348	20	3784	-14.49	12.75	-0.05
305	SLE FR 5	357	20	3806	-14.56	13.12	-0.05
305	SLE FR 6	357	20	3879	-14.76	13.06	-0.05
305	SLE QP 1	334	19	3651	-14.06	12.24	-0.04
305	SLE QP 2	348	20	3788	-14.48	12.73	-0.05
305	SLD 1	1296	20	4144	-35.62	54.7	-0.05
305	SLD 2	1296	20	4144	-35.62	54.7	-0.05
305	SLD 3	1451	40	4504	-13.87	61.45	-0.1
305	SLD 4	1451	40	4504	-13.87	61.45	-0.1
305	SLD 5	398	-11	3350	-53.81	15.08	0.03
305	SLD 6	398	-11	3350	-53.81	15.08	0.03
305	SLD 7	913	56	4548	18.7	37.59	-0.13
305	SLD 8	913	56	4548	18.7	37.59	-0.13
305	SLD 9	-218	-17	3028	-47.65	-12.12	0.04
305	SLD 10	-218	-17	3028	-47.65	-12.12	0.04
305	SLD 11	298	50	4226	24.85	10.38	-0.12
305	SLD 12	298	50	4226	24.85	10.38	-0.12
305	SLD 13	-755	-1	3072	-15.09	-35.99	0.01
305	SLD 14	-755	-1	3072	-15.09	-35.99	0.01
305	SLD 15	-601	20	3432	6.66	-29.24	-0.04
305	SLD 16	-601	20	3432	6.66	-29.24	-0.04
305	SLV 1	2496	19	4578	-67.35	107.77	-0.05
305	SLV 2	2496	19	4578	-67.35	107.77	-0.05
305	SLV 3	2864	70	5430	-12.25	123.87	-0.17
305	SLV 4	2864	70	5430	-12.25	123.87	-0.17
305	SLV 5	435	-58	2734	-113.9	16.82	0.14
305	SLV 6	435	-58	2734	-113.9	16.82	0.14
305	SLV 7	1660	112	5572	69.76	70.5	-0.27
305	SLV 8	1660	112	5572	69.76	70.5	-0.27
305	SLV 9	-965	-72	2004	-98.71	-45.03	0.18
305	SLV 10	-965	-72	2004	-98.71	-45.03	0.18
305	SLV 11	261	97	4842	84.95	8.64	-0.23
305	SLV 12	261	97	4842	84.95	8.64	-0.23
305	SLV 13	-2168	-31	2146	-16.71	-98.4	0.08
305	SLV 14	-2168	-31	2146	-16.71	-98.4	0.08
305	SLV 15	-1800	20	2998	38.39	-82.3	-0.04
305	SLV 16	-1800	20	2998	38.39	-82.3	-0.04
306	SLU 1	304	19	3762	-13.59	13.35	-0.05
306	SLU 2	305	19	3740	-13.63	13.36	-0.05
306	SLU 3	337	20	3863	-14.05	14.83	-0.05
306	SLU 4	338	20	3850	-14.08	14.84	-0.05
306	SLU 5	337	20	3807	-13.93	14.8	-0.05
306	SLU 6	369	21	3931	-14.36	16.26	-0.05
306	SLU 7	370	21	3917	-14.38	16.27	-0.05
306	SLU 8	368	20	3896	-14.2	16.21	-0.05
306	SLU 9	368	20	3883	-14.22	16.22	-0.05
306	SLU 10	349	22	4259	-15.18	15.28	-0.05

Nodo	Cont.	Reazione a traslazione			Reazione a rotazione		
Ind.	N.br.	x	y	z	x	y	z
306	SLU 11	381	22	4382	-15.61	16.74	-0.05
306	SLU 12	382	22	4369	-15.63	16.76	-0.05
306	SLU 13	381	22	4326	-15.49	16.71	-0.05
306	SLU 14	413	23	4449	-15.91	18.18	-0.05
306	SLU 15	413	23	4436	-15.94	18.19	-0.05
306	SLU 16	411	23	4415	-15.75	18.13	-0.05
306	SLU 17	412	23	4402	-15.78	18.14	-0.05
306	SLU 18	366	23	4503	-15.81	16.08	-0.05
306	SLU 19	367	23	4490	-15.83	16.09	-0.05
306	SLU 20	398	23	4570	-16.11	17.52	-0.05
306	SLU 21	399	23	4557	-16.14	17.53	-0.05
306	SLU 22	356	22	4260	-15.18	15.65	-0.05
306	SLU 23	358	22	4238	-15.22	15.66	-0.05
306	SLU 24	389	23	4361	-15.65	17.13	-0.05
306	SLU 25	390	22	4348	-15.67	17.14	-0.05
306	SLU 26	389	22	4305	-15.53	17.1	-0.05
306	SLU 27	421	23	4428	-15.95	18.56	-0.05
306	SLU 28	422	23	4415	-15.98	18.57	-0.05
306	SLU 29	420	23	4394	-15.79	18.51	-0.05
306	SLU 30	421	23	4381	-15.82	18.52	-0.05
306	SLU 31	401	24	4756	-16.78	17.58	-0.06
306	SLU 32	433	25	4880	-17.2	19.04	-0.06
306	SLU 33	434	25	4867	-17.23	19.06	-0.06
306	SLU 34	433	25	4824	-17.08	19.01	-0.06
306	SLU 35	465	25	4947	-17.51	20.48	-0.06
306	SLU 36	466	25	4934	-17.53	20.49	-0.06
306	SLU 37	464	25	4913	-17.35	20.43	-0.06
306	SLU 38	464	25	4900	-17.37	20.44	-0.06
306	SLU 39	419	25	5001	-17.4	18.38	-0.06
306	SLU 40	419	25	4988	-17.43	18.39	-0.06
306	SLU 41	451	26	5068	-17.71	19.82	-0.06
306	SLU 42	451	26	5055	-17.73	19.83	-0.06
306	SLU 43	377	24	4720	-17.12	16.56	-0.06
306	SLU 44	379	24	4698	-17.16	16.58	-0.06
306	SLU 45	411	25	4821	-17.58	18.04	-0.06
306	SLU 46	411	25	4808	-17.61	18.05	-0.06
306	SLU 47	411	25	4765	-17.46	18.01	-0.06
306	SLU 48	442	26	4888	-17.89	19.48	-0.06
306	SLU 49	443	26	4875	-17.91	19.49	-0.06
306	SLU 50	441	25	4854	-17.73	19.43	-0.06
306	SLU 51	442	25	4841	-17.75	19.44	-0.06
306	SLU 52	422	27	5216	-18.71	18.5	-0.06
306	SLU 53	454	27	5340	-19.14	19.96	-0.06
306	SLU 54	455	27	5327	-19.16	19.97	-0.06
306	SLU 55	454	27	5284	-19.02	19.93	-0.06
306	SLU 56	486	28	5407	-19.44	21.39	-0.07
306	SLU 57	487	28	5394	-19.47	21.4	-0.07
306	SLU 58	485	28	5373	-19.28	21.34	-0.07
306	SLU 59	485	28	5360	-19.31	21.35	-0.07
306	SLU 60	440	28	5461	-19.34	19.3	-0.07
306	SLU 61	441	28	5447	-19.36	19.31	-0.07
306	SLU 62	472	28	5528	-19.64	20.73	-0.07
306	SLU 63	472	28	5515	-19.67	20.74	-0.07
306	SLU 64	430	27	5218	-18.71	18.86	-0.06
306	SLU 65	431	27	5195	-18.75	18.88	-0.06
306	SLU 66	463	28	5319	-19.18	20.34	-0.06
306	SLU 67	464	27	5306	-19.2	20.35	-0.06
306	SLU 68	463	27	5263	-19.06	20.31	-0.06
306	SLU 69	495	28	5386	-19.48	21.78	-0.07
306	SLU 70	495	28	5373	-19.51	21.79	-0.07
306	SLU 71	493	28	5352	-19.32	21.73	-0.07
306	SLU 72	494	28	5339	-19.35	21.74	-0.07
306	SLU 73	475	29	5714	-20.31	20.8	-0.07
306	SLU 74	506	30	5838	-20.73	22.26	-0.07
306	SLU 75	507	30	5824	-20.76	22.27	-0.07
306	SLU 76	506	30	5782	-20.61	22.23	-0.07
306	SLU 77	538	30	5905	-21.04	23.69	-0.07
306	SLU 78	539	30	5892	-21.06	23.7	-0.07
306	SLU 79	537	30	5871	-20.88	23.64	-0.07
306	SLU 80	538	30	5858	-20.9	23.65	-0.07
306	SLU 81	492	30	5959	-20.93	21.6	-0.07
306	SLU 82	493	30	5945	-20.96	21.61	-0.07
306	SLU 83	524	31	6026	-21.24	23.03	-0.07
306	SLU 84	525	31	6013	-21.26	23.04	-0.07
306	SLE RA 1	319	20	3904	-14.04	14	-0.05
306	SLE RA 2	320	20	3889	-14.07	14.02	-0.05
306	SLE RA 3	341	21	3972	-14.35	14.99	-0.05
306	SLE RA 4	342	21	3963	-14.37	15	-0.05
306	SLE RA 5	341	20	3934	-14.27	14.97	-0.05
306	SLE RA 6	362	21	4017	-14.56	15.95	-0.05
306	SLE RA 7	363	21	4008	-14.57	15.95	-0.05
306	SLE RA 8	361	21	3994	-14.45	15.91	-0.05
306	SLE RA 9	362	21	3985	-14.47	15.92	-0.05
306	SLE RA 10	349	22	4235	-15.11	15.29	-0.05
306	SLE RA 11	370	22	4317	-15.39	16.27	-0.05
306	SLE RA 12	371	22	4309	-15.41	16.28	-0.05
306	SLE RA 13	370	22	4280	-15.31	16.25	-0.05
306	SLE RA 14	391	22	4362	-15.59	17.22	-0.05
306	SLE RA 15	392	22	4354	-15.61	17.23	-0.05
306	SLE RA 16	391	22	4340	-15.49	17.19	-0.05
306	SLE RA 17	391	22	4331	-15.5	17.2	-0.05

Nodo	Cont.	Reazione a traslazione			Reazione a rotazione		
Ind.	N.br.	x	y	z	x	y	z
306	SLE RA 18	361	22	4398	-15.52	15.83	-0.05
306	SLE RA 19	361	22	4389	-15.54	15.83	-0.05
306	SLE RA 20	382	23	4443	-15.73	16.78	-0.05
306	SLE RA 21	382	23	4434	-15.74	16.79	-0.05
306	SLE FR 1	319	20	3904	-14.04	14	-0.05
306	SLE FR 2	319	20	3901	-14.05	14.01	-0.05
306	SLE FR 3	327	20	3922	-14.13	14.38	-0.05
306	SLE FR 4	332	21	4049	-14.49	14.55	-0.05
306	SLE FR 5	340	21	4070	-14.57	14.93	-0.05
306	SLE FR 6	340	21	4151	-14.78	14.92	-0.05
306	SLE QP 1	319	20	3904	-14.04	14	-0.05
306	SLE QP 2	331	21	4052	-14.49	14.55	-0.05
306	SLD 1	1231	21	4395	-32.65	54.9	-0.05
306	SLD 2	1231	21	4395	-32.65	54.9	-0.05
306	SLD 3	1381	37	4739	-14.03	61.57	-0.1
306	SLD 4	1381	37	4739	-14.03	61.57	-0.1
306	SLD 5	374	-3	3634	-48.16	16.53	0.02
306	SLD 6	374	-3	3634	-48.16	16.53	0.02
306	SLD 7	874	50	4780	13.88	38.79	-0.13
306	SLD 8	874	50	4780	13.88	38.79	-0.13
306	SLD 9	-211	-8	3325	-42.85	-9.68	0.03
306	SLD 10	-211	-8	3325	-42.85	-9.68	0.03
306	SLD 11	289	45	4471	19.19	12.57	-0.11
306	SLD 12	289	45	4471	19.19	12.57	-0.11
306	SLD 13	-718	4	3366	-14.94	-32.47	0
306	SLD 14	-718	4	3366	-14.94	-32.47	0
306	SLD 15	-568	20	3710	3.67	-25.8	-0.04
306	SLD 16	-568	20	3710	3.67	-25.8	-0.04
306	SLV 1	2369	21	4815	-59.76	105.91	-0.06
306	SLV 2	2369	21	4815	-59.76	105.91	-0.06
306	SLV 3	2725	61	5626	-12.7	121.81	-0.17
306	SLV 4	2725	61	5626	-12.7	121.81	-0.17
306	SLV 5	402	-40	3051	-99.45	17.83	0.11
306	SLV 6	402	-40	3051	-99.45	17.83	0.11
306	SLV 7	1590	94	5754	57.43	70.85	-0.25
306	SLV 8	1590	94	5754	57.43	70.85	-0.25
306	SLV 9	-927	-52	2350	-86.4	-41.75	0.15
306	SLV 10	-927	-52	2350	-86.4	-41.75	0.15
306	SLV 11	261	81	5054	70.47	11.27	-0.21
306	SLV 12	261	81	5054	70.47	11.27	-0.21
306	SLV 13	-2062	-20	2479	-16.28	-92.71	0.07
306	SLV 14	-2062	-20	2479	-16.28	-92.71	0.07
306	SLV 15	-1706	20	3290	30.79	-76.81	-0.04
306	SLV 16	-1706	20	3290	30.79	-76.81	-0.04
307	SLU 1	177	18	4012	-12.5	5.03	-0.04
307	SLU 2	178	18	3995	-12.52	5.04	-0.04
307	SLU 3	205	19	4116	-12.93	6.23	-0.04
307	SLU 4	206	19	4106	-12.94	6.23	-0.04
307	SLU 5	206	19	4061	-12.79	6.26	-0.04
307	SLU 6	233	19	4182	-13.2	7.46	-0.04
307	SLU 7	234	19	4172	-13.21	7.46	-0.04
307	SLU 8	233	19	4144	-13.05	7.48	-0.04
307	SLU 9	233	19	4134	-13.06	7.49	-0.04
307	SLU 10	199	21	4553	-14.01	5.53	-0.05
307	SLU 11	227	21	4674	-14.42	6.72	-0.05
307	SLU 12	227	21	4664	-14.43	6.72	-0.05
307	SLU 13	227	21	4619	-14.29	6.75	-0.05
307	SLU 14	254	22	4740	-14.7	7.94	-0.05
307	SLU 15	255	22	4730	-14.71	7.94	-0.05
307	SLU 16	254	22	4702	-14.55	7.97	-0.05
307	SLU 17	255	22	4692	-14.56	7.97	-0.05
307	SLU 18	207	22	4809	-14.64	5.73	-0.05
307	SLU 19	208	22	4799	-14.65	5.73	-0.05
307	SLU 20	235	22	4875	-14.92	6.95	-0.05
307	SLU 21	236	22	4865	-14.93	6.96	-0.05
307	SLU 22	208	21	4545	-14.02	6	-0.05
307	SLU 23	209	21	4529	-14.04	6.01	-0.05
307	SLU 24	237	21	4650	-14.45	7.2	-0.05
307	SLU 25	237	21	4640	-14.46	7.2	-0.05
307	SLU 26	237	21	4595	-14.31	7.23	-0.05
307	SLU 27	264	22	4716	-14.72	8.42	-0.05
307	SLU 28	265	22	4706	-14.73	8.42	-0.05
307	SLU 29	264	22	4677	-14.57	8.45	-0.05
307	SLU 30	264	22	4667	-14.58	8.45	-0.05
307	SLU 31	230	23	5087	-15.53	6.49	-0.05
307	SLU 32	258	24	5208	-15.95	7.68	-0.05
307	SLU 33	258	24	5198	-15.95	7.69	-0.05
307	SLU 34	258	24	5153	-15.81	7.71	-0.05
307	SLU 35	286	24	5274	-16.22	8.91	-0.05
307	SLU 36	286	24	5264	-16.23	8.91	-0.05
307	SLU 37	285	24	5236	-16.07	8.93	-0.05
307	SLU 38	286	24	5226	-16.08	8.94	-0.05
307	SLU 39	238	24	5343	-16.16	6.69	-0.05
307	SLU 40	239	24	5333	-16.17	6.7	-0.05
307	SLU 41	266	25	5409	-16.44	7.92	-0.06
307	SLU 42	267	25	5399	-16.45	7.92	-0.05
307	SLU 43	220	23	5032	-15.73	6.21	-0.05
307	SLU 44	220	23	5015	-15.74	6.22	-0.05
307	SLU 45	248	24	5136	-16.16	7.41	-0.05
307	SLU 46	248	24	5126	-16.16	7.41	-0.05
307	SLU 47	248	23	5081	-16.02	7.44	-0.05

Nodo	Cont.	Reazione a traslazione			Reazione a rotazione		
Ind.	N.br.	x	y	z	x	y	z
307	SLU 48	276	24	5202	-16.43	8.64	-0.05
307	SLU 49	276	24	5192	-16.44	8.64	-0.05
307	SLU 50	276	24	5164	-16.28	8.66	-0.05
307	SLU 51	276	24	5154	-16.29	8.67	-0.05
307	SLU 52	241	25	5574	-17.24	6.7	-0.06
307	SLU 53	269	26	5695	-17.65	7.9	-0.06
307	SLU 54	269	26	5685	-17.66	7.9	-0.06
307	SLU 55	269	26	5640	-17.52	7.93	-0.06
307	SLU 56	297	27	5761	-17.93	9.12	-0.06
307	SLU 57	297	27	5751	-17.94	9.12	-0.06
307	SLU 58	297	26	5722	-17.78	9.15	-0.06
307	SLU 59	297	26	5712	-17.79	9.15	-0.06
307	SLU 60	250	27	5830	-17.87	6.91	-0.06
307	SLU 61	250	26	5820	-17.88	6.91	-0.06
307	SLU 62	278	27	5896	-18.14	8.13	-0.06
307	SLU 63	278	27	5886	-18.15	8.14	-0.06
307	SLU 64	251	26	5566	-17.25	7.18	-0.06
307	SLU 65	251	25	5549	-17.27	7.18	-0.06
307	SLU 66	279	26	5670	-17.68	8.38	-0.06
307	SLU 67	279	26	5660	-17.69	8.38	-0.06
307	SLU 68	279	26	5615	-17.54	8.41	-0.06
307	SLU 69	307	27	5736	-17.95	9.6	-0.06
307	SLU 70	307	27	5726	-17.96	9.6	-0.06
307	SLU 71	307	26	5698	-17.8	9.63	-0.06
307	SLU 72	307	26	5688	-17.81	9.63	-0.06
307	SLU 73	272	28	6108	-18.76	7.67	-0.06
307	SLU 74	300	29	6229	-19.17	8.86	-0.06
307	SLU 75	300	29	6219	-19.18	8.86	-0.06
307	SLU 76	300	28	6174	-19.04	8.89	-0.06
307	SLU 77	328	29	6295	-19.45	10.09	-0.06
307	SLU 78	328	29	6285	-19.46	10.09	-0.06
307	SLU 79	328	29	6256	-19.3	10.11	-0.06
307	SLU 80	328	29	6246	-19.31	10.12	-0.06
307	SLU 81	281	29	6364	-19.39	7.87	-0.06
307	SLU 82	281	29	6354	-19.4	7.88	-0.06
307	SLU 83	309	29	6430	-19.67	9.1	-0.07
307	SLU 84	309	29	6420	-19.68	9.1	-0.07
307	SLE RA 1	186	19	4164	-12.94	5.31	-0.04
307	SLE RA 2	186	19	4153	-12.95	5.31	-0.04
307	SLE RA 3	205	20	4234	-13.22	6.11	-0.04
307	SLE RA 4	205	19	4227	-13.23	6.11	-0.04
307	SLE RA 5	205	19	4197	-13.13	6.13	-0.04
307	SLE RA 6	224	20	4278	-13.4	6.92	-0.04
307	SLE RA 7	224	20	4271	-13.41	6.93	-0.04
307	SLE RA 8	223	20	4252	-13.3	6.94	-0.04
307	SLE RA 9	224	20	4245	-13.31	6.95	-0.04
307	SLE RA 10	201	21	4525	-13.94	5.64	-0.05
307	SLE RA 11	219	21	4606	-14.22	6.43	-0.05
307	SLE RA 12	219	21	4599	-14.22	6.43	-0.05
307	SLE RA 13	219	21	4569	-14.13	6.45	-0.05
307	SLE RA 14	238	21	4650	-14.4	7.25	-0.05
307	SLE RA 15	238	21	4643	-14.41	7.25	-0.05
307	SLE RA 16	237	21	4624	-14.3	7.27	-0.05
307	SLE RA 17	238	21	4618	-14.31	7.27	-0.05
307	SLE RA 18	206	21	4696	-14.36	5.77	-0.05
307	SLE RA 19	206	21	4689	-14.37	5.77	-0.05
307	SLE RA 20	225	22	4740	-14.55	6.59	-0.05
307	SLE RA 21	225	22	4733	-14.55	6.59	-0.05
307	SLE FR 1	186	19	4164	-12.94	5.31	-0.04
307	SLE FR 2	186	19	4162	-12.94	5.31	-0.04
307	SLE FR 3	194	19	4182	-13.01	5.64	-0.04
307	SLE FR 4	192	20	4321	-13.37	5.45	-0.04
307	SLE FR 5	200	20	4341	-13.44	5.78	-0.04
307	SLE FR 6	196	20	4430	-13.65	5.54	-0.05
307	SLE QP 1	186	19	4164	-12.94	5.31	-0.04
307	SLE QP 2	192	20	4324	-13.36	5.45	-0.04
307	SLD 1	1033	21	4596	-27.48	42.91	-0.05
307	SLD 2	1033	21	4596	-27.48	42.91	-0.05
307	SLD 3	1177	31	4930	-13.1	49.17	-0.08
307	SLD 4	1177	31	4930	-13.1	49.17	-0.08
307	SLD 5	227	4	3898	-39.41	7.2	0
307	SLD 6	227	4	3898	-39.41	7.2	0
307	SLD 7	705	39	5013	8.53	28.06	-0.1
307	SLD 8	705	39	5013	8.53	28.06	-0.1
307	SLD 9	-321	1	3634	-35.25	-17.16	0.01
307	SLD 10	-321	1	3634	-35.25	-17.16	0.01
307	SLD 11	158	35	4749	12.68	3.7	-0.09
307	SLD 12	158	35	4749	12.68	3.7	-0.09
307	SLD 13	-792	9	3717	-13.63	-38.27	-0.01
307	SLD 14	-792	9	3717	-13.63	-38.27	-0.01
307	SLD 15	-649	19	4051	0.75	-32.01	-0.04
307	SLD 16	-649	19	4051	0.75	-32.01	-0.04
307	SLV 1	2096	21	4930	-48.41	90.23	-0.05
307	SLV 2	2096	21	4930	-48.41	90.23	-0.05
307	SLV 3	2438	47	5717	-12.15	105.24	-0.12
307	SLV 4	2438	47	5717	-12.15	105.24	-0.12
307	SLV 5	244	-19	3312	-78.88	8.12	0.07
307	SLV 6	244	-19	3312	-78.88	8.12	0.07
307	SLV 7	1385	67	5935	42	58.15	-0.18
307	SLV 8	1385	67	5935	42	58.15	-0.18
307	SLV 9	-1001	-27	2712	-68.73	-47.25	0.09

Nodo	Cont.	Reazione a traslazione			Reazione a rotazione		
Ind.	N.br.	x	y	z	x	y	z
307	SLV 10	-1001	-27	2712	-68.73	-47.25	0.09
307	SLV 11	140	58	5336	52.15	2.78	-0.16
307	SLV 12	140	58	5336	52.15	2.78	-0.16
307	SLV 13	-2054	-7	2930	-14.58	-94.34	0.03
307	SLV 14	-2054	-7	2930	-14.58	-94.34	0.03
307	SLV 15	-1712	18	3718	21.68	-79.33	-0.04
307	SLV 16	-1712	18	3718	21.68	-79.33	-0.04
308	SLU 1	44	15	4240	-10.27	2.29	-0.03
308	SLU 2	44	15	4229	-10.27	2.27	-0.03
308	SLU 3	67	15	4345	-10.62	3.37	-0.04
308	SLU 4	68	15	4338	-10.62	3.35	-0.03
308	SLU 5	68	15	4291	-10.5	3.38	-0.03
308	SLU 6	92	16	4407	-10.84	4.48	-0.04
308	SLU 7	92	16	4400	-10.84	4.46	-0.04
308	SLU 8	92	15	4364	-10.72	4.52	-0.04
308	SLU 9	92	15	4357	-10.72	4.5	-0.04
308	SLU 10	43	17	4822	-11.56	2.3	-0.04
308	SLU 11	66	17	4938	-11.9	3.4	-0.04
308	SLU 12	66	17	4932	-11.9	3.39	-0.04
308	SLU 13	67	17	4884	-11.78	3.41	-0.04
308	SLU 14	90	18	5000	-12.13	4.51	-0.04
308	SLU 15	91	18	4994	-12.13	4.5	-0.04
308	SLU 16	91	17	4958	-12	4.55	-0.04
308	SLU 17	91	17	4951	-12	4.53	-0.04
308	SLU 18	42	18	5088	-12.11	2.34	-0.04
308	SLU 19	43	18	5081	-12.11	2.33	-0.04
308	SLU 20	67	18	5150	-12.33	3.45	-0.04
308	SLU 21	67	18	5143	-12.33	3.44	-0.04
308	SLU 22	54	17	4805	-11.56	2.81	-0.04
308	SLU 23	54	17	4793	-11.56	2.79	-0.04
308	SLU 24	77	17	4910	-11.91	3.88	-0.04
308	SLU 25	77	17	4903	-11.91	3.87	-0.04
308	SLU 26	78	17	4855	-11.79	3.9	-0.04
308	SLU 27	101	18	4972	-12.13	5	-0.04
308	SLU 28	102	18	4965	-12.13	4.98	-0.04
308	SLU 29	102	17	4929	-12.01	5.03	-0.04
308	SLU 30	102	17	4922	-12.01	5.02	-0.04
308	SLU 31	53	19	5387	-12.85	2.82	-0.04
308	SLU 32	76	19	5503	-13.19	3.92	-0.04
308	SLU 33	76	19	5496	-13.19	3.9	-0.04
308	SLU 34	77	19	5448	-13.07	3.93	-0.04
308	SLU 35	100	20	5565	-13.42	5.03	-0.04
308	SLU 36	101	20	5558	-13.42	5.01	-0.04
308	SLU 37	101	20	5522	-13.29	5.07	-0.04
308	SLU 38	101	19	5515	-13.29	5.05	-0.04
308	SLU 39	52	20	5652	-13.4	2.86	-0.04
308	SLU 40	53	20	5645	-13.4	2.84	-0.04
308	SLU 41	77	20	5714	-13.62	3.97	-0.05
308	SLU 42	77	20	5707	-13.62	3.95	-0.05
308	SLU 43	54	19	5319	-12.91	2.8	-0.04
308	SLU 44	54	18	5307	-12.91	2.78	-0.04
308	SLU 45	77	19	5424	-13.26	3.88	-0.04
308	SLU 46	77	19	5417	-13.26	3.86	-0.04
308	SLU 47	78	19	5369	-13.13	3.89	-0.04
308	SLU 48	101	19	5486	-13.48	4.99	-0.04
308	SLU 49	101	19	5479	-13.48	4.97	-0.04
308	SLU 50	102	19	5443	-13.36	5.03	-0.04
308	SLU 51	102	19	5436	-13.36	5.01	-0.04
308	SLU 52	53	20	5901	-14.2	2.81	-0.05
308	SLU 53	76	21	6017	-14.54	3.91	-0.05
308	SLU 54	76	21	6010	-14.54	3.9	-0.05
308	SLU 55	77	21	5963	-14.42	3.92	-0.05
308	SLU 56	100	21	6079	-14.77	5.02	-0.05
308	SLU 57	100	21	6072	-14.77	5.01	-0.05
308	SLU 58	101	21	6036	-14.64	5.06	-0.05
308	SLU 59	101	21	6029	-14.64	5.04	-0.05
308	SLU 60	52	21	6166	-14.75	2.85	-0.05
308	SLU 61	52	21	6159	-14.75	2.84	-0.05
308	SLU 62	76	22	6228	-14.97	3.96	-0.05
308	SLU 63	77	22	6221	-14.97	3.95	-0.05
308	SLU 64	64	21	5883	-14.2	3.32	-0.05
308	SLU 65	64	20	5872	-14.2	3.3	-0.05
308	SLU 66	87	21	5988	-14.55	4.4	-0.05
308	SLU 67	87	21	5981	-14.55	4.38	-0.05
308	SLU 68	88	21	5934	-14.42	4.41	-0.05
308	SLU 69	111	21	6050	-14.77	5.51	-0.05
308	SLU 70	111	21	6043	-14.77	5.49	-0.05
308	SLU 71	112	21	6007	-14.65	5.54	-0.05
308	SLU 72	112	21	6000	-14.65	5.53	-0.05
308	SLU 73	63	22	6465	-15.48	3.33	-0.05
308	SLU 74	86	23	6581	-15.83	4.43	-0.05
308	SLU 75	86	23	6575	-15.83	4.41	-0.05
308	SLU 76	87	23	6527	-15.71	4.44	-0.05
308	SLU 77	110	23	6643	-16.06	5.54	-0.05
308	SLU 78	110	23	6637	-16.06	5.52	-0.05
308	SLU 79	111	23	6601	-15.93	5.58	-0.05
308	SLU 80	111	23	6594	-15.93	5.56	-0.05
308	SLU 81	62	23	6731	-16.04	3.37	-0.05
308	SLU 82	62	23	6724	-16.04	3.35	-0.05
308	SLU 83	86	24	6793	-16.26	4.48	-0.05
308	SLU 84	86	24	6786	-16.26	4.46	-0.05

Nodo	Cont.	Reazione a traslazione			Reazione a rotazione		
Ind.	N.br.	x	y	z	x	y	z
308	SLE RA 1	47	15	4402	-10.64	2.44	-0.04
308	SLE RA 2	47	15	4394	-10.64	2.43	-0.04
308	SLE RA 3	62	16	4471	-10.87	3.16	-0.04
308	SLE RA 4	62	16	4467	-10.87	3.15	-0.04
308	SLE RA 5	63	16	4435	-10.79	3.17	-0.04
308	SLE RA 6	78	16	4513	-11.02	3.9	-0.04
308	SLE RA 7	79	16	4508	-11.02	3.89	-0.04
308	SLE RA 8	79	16	4484	-10.94	3.92	-0.04
308	SLE RA 9	79	16	4480	-10.94	3.91	-0.04
308	SLE RA 10	46	17	4789	-11.5	2.45	-0.04
308	SLE RA 11	62	17	4867	-11.73	3.18	-0.04
308	SLE RA 12	62	17	4862	-11.73	3.17	-0.04
308	SLE RA 13	62	17	4831	-11.65	3.19	-0.04
308	SLE RA 14	78	17	4908	-11.88	3.92	-0.04
308	SLE RA 15	78	17	4904	-11.88	3.91	-0.04
308	SLE RA 16	78	17	4880	-11.8	3.94	-0.04
308	SLE RA 17	78	17	4875	-11.8	3.93	-0.04
308	SLE RA 18	46	17	4967	-11.86	2.47	-0.04
308	SLE RA 19	46	17	4962	-11.86	2.46	-0.04
308	SLE RA 20	62	18	5008	-12.01	3.21	-0.04
308	SLE RA 21	62	17	5003	-12.01	3.2	-0.04
308	SLE FR 1	47	15	4402	-10.64	2.44	-0.04
308	SLE FR 2	47	15	4400	-10.64	2.44	-0.04
308	SLE FR 3	53	15	4418	-10.7	2.74	-0.04
308	SLE FR 4	47	16	4570	-11.01	2.45	-0.04
308	SLE FR 5	53	16	4588	-11.07	2.75	-0.04
308	SLE FR 6	46	16	4684	-11.25	2.46	-0.04
308	SLE QP 1	47	15	4402	-10.64	2.44	-0.04
308	SLE QP 2	46	16	4571	-11.01	2.45	-0.04
308	SLD 1	832	17	4721	-10.9	38.1	-0.04
308	SLD 2	832	17	4721	-10.9	38.1	-0.04
308	SLD 3	975	22	5056	-20.64	44.45	-0.05
308	SLD 4	975	22	5056	-20.64	44.45	-0.05
308	SLD 5	66	9	4108	3.79	3.52	-0.01
308	SLD 6	66	9	4108	3.79	3.52	-0.01
308	SLD 7	541	25	5225	-28.66	24.67	-0.07
308	SLD 8	541	25	5225	-28.66	24.67	-0.07
308	SLD 9	-448	7	3917	6.65	-19.77	-0.01
308	SLD 10	-448	7	3917	6.65	-19.77	-0.01
308	SLD 11	27	23	5034	-25.8	1.38	-0.06
308	SLD 12	27	23	5034	-25.8	1.38	-0.06
308	SLD 13	-882	10	4086	-1.38	-39.54	-0.02
308	SLD 14	-882	10	4086	-1.38	-39.54	-0.02
308	SLD 15	-739	15	4421	-11.11	-33.2	-0.03
308	SLD 16	-739	15	4421	-11.11	-33.2	-0.03
308	SLV 1	1825	19	4905	-10.35	83.12	-0.04
308	SLV 2	1825	19	4905	-10.35	83.12	-0.04
308	SLV 3	2165	30	5698	-34.78	98.32	-0.08
308	SLV 4	2165	30	5698	-34.78	98.32	-0.08
308	SLV 5	64	-1	3468	26.24	3.6	0.02
308	SLV 6	64	-1	3468	26.24	3.6	0.02
308	SLV 7	1198	37	6112	-55.19	54.26	-0.11
308	SLV 8	1198	37	6112	-55.19	54.26	-0.11
308	SLV 9	-1105	-5	3030	33.17	-49.36	0.04
308	SLV 10	-1105	-5	3030	33.17	-49.36	0.04
308	SLV 11	29	32	5674	-48.25	1.3	-0.1
308	SLV 12	29	32	5674	-48.25	1.3	-0.1
308	SLV 13	-2072	2	3444	12.76	-93.42	0.01
308	SLV 14	-2072	2	3444	12.76	-93.42	0.01
308	SLV 15	-1732	13	4237	-11.66	-78.22	-0.03
308	SLV 16	-1732	13	4237	-11.66	-78.22	-0.03
309	SLU 1	-208	11	4421	-7.49	-11.64	-0.02
309	SLU 2	-208	11	4415	-7.48	-11.65	-0.02
309	SLU 3	-192	12	4524	-7.74	-10.97	-0.02
309	SLU 4	-192	12	4520	-7.73	-10.98	-0.02
309	SLU 5	-189	11	4470	-7.64	-10.79	-0.02
309	SLU 6	-173	12	4579	-7.9	-10.11	-0.02
309	SLU 7	-173	12	4575	-7.89	-10.12	-0.02
309	SLU 8	-169	12	4532	-7.81	-9.92	-0.02
309	SLU 9	-169	12	4528	-7.8	-9.93	-0.02
309	SLU 10	-248	13	5035	-8.46	-13.8	-0.02
309	SLU 11	-232	13	5144	-8.72	-13.12	-0.02
309	SLU 12	-232	13	5140	-8.71	-13.13	-0.02
309	SLU 13	-229	13	5090	-8.62	-12.95	-0.02
309	SLU 14	-213	13	5199	-8.87	-12.27	-0.03
309	SLU 15	-213	13	5195	-8.87	-12.27	-0.02
309	SLU 16	-209	13	5152	-8.79	-12.08	-0.02
309	SLU 17	-209	13	5148	-8.78	-12.08	-0.02
309	SLU 18	-265	14	5307	-8.89	-14.71	-0.03
309	SLU 19	-265	13	5303	-8.88	-14.72	-0.02
309	SLU 20	-246	14	5362	-9.05	-13.86	-0.03
309	SLU 21	-246	14	5359	-9.04	-13.86	-0.03
309	SLU 22	-235	13	5008	-8.45	-13.18	-0.02
309	SLU 23	-235	13	5001	-8.45	-13.19	-0.02
309	SLU 24	-219	13	5110	-8.7	-12.51	-0.02
309	SLU 25	-219	13	5106	-8.7	-12.52	-0.02
309	SLU 26	-216	13	5057	-8.61	-12.33	-0.02
309	SLU 27	-200	13	5166	-8.86	-11.65	-0.03
309	SLU 28	-200	13	5162	-8.86	-11.66	-0.02
309	SLU 29	-196	13	5119	-8.77	-11.46	-0.02
309	SLU 30	-196	13	5115	-8.77	-11.47	-0.02

Nodo	Cont.	Reazione a traslazione			Reazione a rotazione		
Ind.	N.br.	x	y	z	x	y	z
309	SLU 31	-275	14	5621	-9.43	-15.34	-0.03
309	SLU 32	-259	15	5730	-9.68	-14.66	-0.03
309	SLU 33	-259	15	5727	-9.68	-14.67	-0.03
309	SLU 34	-256	15	5677	-9.59	-14.49	-0.03
309	SLU 35	-240	15	5786	-9.84	-13.81	-0.03
309	SLU 36	-240	15	5782	-9.84	-13.81	-0.03
309	SLU 37	-237	15	5739	-9.75	-13.62	-0.03
309	SLU 38	-236	15	5735	-9.75	-13.62	-0.03
309	SLU 39	-293	15	5894	-9.85	-16.25	-0.03
309	SLU 40	-293	15	5890	-9.85	-16.26	-0.03
309	SLU 41	-273	15	5949	-10.01	-15.4	-0.03
309	SLU 42	-273	15	5945	-10.01	-15.4	-0.03
309	SLU 43	-261	14	5546	-9.4	-14.6	-0.03
309	SLU 44	-261	14	5540	-9.4	-14.61	-0.03
309	SLU 45	-245	14	5649	-9.65	-13.93	-0.03
309	SLU 46	-245	14	5645	-9.65	-13.94	-0.03
309	SLU 47	-242	14	5595	-9.56	-13.75	-0.03
309	SLU 48	-226	15	5704	-9.81	-13.08	-0.03
309	SLU 49	-226	15	5700	-9.81	-13.08	-0.03
309	SLU 50	-222	14	5657	-9.72	-12.89	-0.03
309	SLU 51	-222	14	5653	-9.72	-12.89	-0.03
309	SLU 52	-301	16	6160	-10.38	-16.77	-0.03
309	SLU 53	-285	16	6269	-10.63	-16.09	-0.03
309	SLU 54	-285	16	6265	-10.63	-16.09	-0.03
309	SLU 55	-282	16	6215	-10.54	-15.91	-0.03
309	SLU 56	-266	16	6324	-10.79	-15.23	-0.03
309	SLU 57	-266	16	6321	-10.79	-15.24	-0.03
309	SLU 58	-262	16	6277	-10.7	-15.04	-0.03
309	SLU 59	-262	16	6273	-10.7	-15.05	-0.03
309	SLU 60	-319	16	6432	-10.8	-17.68	-0.03
309	SLU 61	-318	16	6428	-10.8	-17.68	-0.03
309	SLU 62	-299	17	6487	-10.96	-16.82	-0.03
309	SLU 63	-299	17	6484	-10.96	-16.83	-0.03
309	SLU 64	-288	16	6133	-10.37	-16.14	-0.03
309	SLU 65	-288	15	6127	-10.36	-16.15	-0.03
309	SLU 66	-272	16	6235	-10.62	-15.47	-0.03
309	SLU 67	-272	16	6232	-10.61	-15.48	-0.03
309	SLU 68	-269	16	6182	-10.52	-15.3	-0.03
309	SLU 69	-253	16	6291	-10.78	-14.62	-0.03
309	SLU 70	-253	16	6287	-10.77	-14.62	-0.03
309	SLU 71	-250	16	6244	-10.69	-14.43	-0.03
309	SLU 72	-249	16	6240	-10.68	-14.43	-0.03
309	SLU 73	-328	17	6747	-11.34	-18.31	-0.03
309	SLU 74	-313	18	6856	-11.6	-17.63	-0.03
309	SLU 75	-312	18	6852	-11.59	-17.63	-0.03
309	SLU 76	-309	17	6802	-11.5	-17.45	-0.03
309	SLU 77	-293	18	6911	-11.76	-16.77	-0.03
309	SLU 78	-293	18	6907	-11.75	-16.78	-0.03
309	SLU 79	-290	18	6864	-11.67	-16.58	-0.03
309	SLU 80	-290	18	6860	-11.66	-16.59	-0.03
309	SLU 81	-346	18	7019	-11.77	-19.22	-0.03
309	SLU 82	-346	18	7015	-11.76	-19.22	-0.03
309	SLU 83	-326	18	7074	-11.93	-18.36	-0.03
309	SLU 84	-326	18	7070	-11.92	-18.37	-0.03
309	SLE RA 1	-216	12	4589	-7.76	-12.08	-0.02
309	SLE RA 2	-216	12	4584	-7.76	-12.09	-0.02
309	SLE RA 3	-205	12	4657	-7.93	-11.63	-0.02
309	SLE RA 4	-205	12	4654	-7.93	-11.64	-0.02
309	SLE RA 5	-203	12	4621	-7.87	-11.51	-0.02
309	SLE RA 6	-192	12	4694	-8.04	-11.06	-0.02
309	SLE RA 7	-192	12	4691	-8.03	-11.07	-0.02
309	SLE RA 8	-190	12	4663	-7.98	-10.93	-0.02
309	SLE RA 9	-190	12	4660	-7.97	-10.94	-0.02
309	SLE RA 10	-243	13	4998	-8.41	-13.52	-0.02
309	SLE RA 11	-232	13	5070	-8.58	-13.07	-0.02
309	SLE RA 12	-232	13	5068	-8.58	-13.07	-0.02
309	SLE RA 13	-230	13	5035	-8.52	-12.95	-0.02
309	SLE RA 14	-219	13	5107	-8.69	-12.5	-0.02
309	SLE RA 15	-219	13	5105	-8.69	-12.5	-0.02
309	SLE RA 16	-217	13	5076	-8.63	-12.37	-0.02
309	SLE RA 17	-217	13	5073	-8.63	-12.37	-0.02
309	SLE RA 18	-254	13	5179	-8.7	-14.13	-0.02
309	SLE RA 19	-254	13	5177	-8.69	-14.13	-0.02
309	SLE RA 20	-241	13	5216	-8.8	-13.56	-0.02
309	SLE RA 21	-241	13	5214	-8.8	-13.56	-0.02
309	SLE FR 1	-216	12	4589	-7.76	-12.08	-0.02
309	SLE FR 2	-216	12	4588	-7.76	-12.08	-0.02
309	SLE FR 3	-211	12	4603	-7.81	-11.85	-0.02
309	SLE FR 4	-227	12	4765	-8.04	-12.69	-0.02
309	SLE FR 5	-222	12	4781	-8.09	-12.46	-0.02
309	SLE FR 6	-235	12	4884	-8.23	-13.1	-0.02
309	SLE QP 1	-216	12	4589	-7.76	-12.08	-0.02
309	SLE QP 2	-227	12	4766	-8.04	-12.69	-0.02
309	SLD 1	519	14	4368	-8.13	20.39	-0.03
309	SLD 2	519	14	4368	-8.13	20.39	-0.03
309	SLD 3	665	18	4724	-13.71	26.43	-0.02
309	SLD 4	665	18	4724	-13.71	26.43	-0.02
309	SLD 5	-225	6	4106	0.39	-11.93	-0.04
309	SLD 6	-225	6	4106	0.39	-11.93	-0.04
309	SLD 7	262	20	5293	-18.2	8.21	-0.01
309	SLD 8	262	20	5293	-18.2	8.21	-0.01

Nodo	Cont.	Reazione a traslazione			Reazione a rotazione		
Ind.	N.br.	x	y	z	x	y	z
309	SLD 9	-716	4	4238	2.12	-33.6	-0.03
309	SLD 10	-716	4	4238	2.12	-33.6	-0.03
309	SLD 11	-230	18	5425	-16.48	-13.45	-0.01
309	SLD 12	-230	18	5425	-16.48	-13.45	-0.01
309	SLD 13	-1119	6	4807	-2.37	-51.82	-0.02
309	SLD 14	-1119	6	4807	-2.37	-51.82	-0.02
309	SLD 15	-973	10	5163	-7.95	-45.78	-0.01
309	SLD 16	-973	10	5163	-7.95	-45.78	-0.01
309	SLV 1	1460	16	3808	-7.99	62.09	-0.05
309	SLV 2	1460	16	3808	-7.99	62.09	-0.05
309	SLV 3	1810	26	4666	-21.85	76.76	-0.03
309	SLV 4	1810	26	4666	-21.85	76.76	-0.03
309	SLV 5	-252	-2	3177	12.99	-12.51	-0.06
309	SLV 6	-252	-2	3177	12.99	-12.51	-0.06
309	SLV 7	915	32	6037	-33.2	36.4	0.01
309	SLV 8	915	32	6037	-33.2	36.4	0.01
309	SLV 9	-1370	-7	3494	17.12	-61.78	-0.05
309	SLV 10	-1370	-7	3494	17.12	-61.78	-0.05
309	SLV 11	-202	26	6355	-29.08	-12.87	0.01
309	SLV 12	-202	26	6355	-29.08	-12.87	0.01
309	SLV 13	-2265	-2	4866	5.76	-102.15	-0.02
309	SLV 14	-2265	-2	4866	5.76	-102.15	-0.02
309	SLV 15	-1915	9	5724	-8.09	-87.48	0
309	SLV 16	-1915	9	5724	-8.09	-87.48	0
310	SLU 1	-448	18	4708	-4.2	-20.87	0.12
310	SLU 2	-448	18	4707	-4.19	-20.92	0.12
310	SLU 3	-440	18	4807	-4.34	-20.42	0.12
310	SLU 4	-440	18	4806	-4.34	-20.45	0.12
310	SLU 5	-434	18	4752	-4.29	-20.18	0.12
310	SLU 6	-426	19	4852	-4.43	-19.69	0.13
310	SLU 7	-426	19	4852	-4.43	-19.71	0.13
310	SLU 8	-420	19	4799	-4.38	-19.39	0.12
310	SLU 9	-420	19	4799	-4.38	-19.42	0.12
310	SLU 10	-522	21	5372	-4.77	-24.34	0.14
310	SLU 11	-514	21	5472	-4.92	-23.84	0.14
310	SLU 12	-514	21	5471	-4.91	-23.87	0.14
310	SLU 13	-508	21	5417	-4.86	-23.6	0.14
310	SLU 14	-500	21	5517	-5.01	-23.11	0.14
310	SLU 15	-500	21	5516	-5	-23.13	0.14
310	SLU 16	-494	21	5464	-4.96	-22.82	0.14
310	SLU 17	-494	21	5463	-4.96	-22.84	0.14
310	SLU 18	-553	22	5658	-5.02	-25.76	0.15
310	SLU 19	-554	22	5658	-5.02	-25.79	0.15
310	SLU 20	-539	22	5704	-5.12	-25.02	0.15
310	SLU 21	-540	22	5703	-5.11	-25.05	0.15
310	SLU 22	-509	20	5331	-4.76	-23.64	0.14
310	SLU 23	-509	20	5329	-4.75	-23.69	0.14
310	SLU 24	-501	21	5429	-4.9	-23.2	0.14
310	SLU 25	-501	21	5428	-4.89	-23.22	0.14
310	SLU 26	-495	21	5375	-4.84	-22.95	0.14
310	SLU 27	-487	21	5475	-4.99	-22.46	0.14
310	SLU 28	-487	21	5474	-4.99	-22.49	0.14
310	SLU 29	-481	21	5422	-4.94	-22.17	0.14
310	SLU 30	-481	21	5421	-4.94	-22.2	0.14
310	SLU 31	-582	23	5994	-5.33	-27.11	0.15
310	SLU 32	-574	24	6094	-5.47	-26.62	0.16
310	SLU 33	-574	24	6093	-5.47	-26.65	0.16
310	SLU 34	-569	23	6040	-5.42	-26.37	0.16
310	SLU 35	-560	24	6140	-5.57	-25.88	0.16
310	SLU 36	-560	24	6139	-5.56	-25.91	0.16
310	SLU 37	-554	24	6087	-5.52	-25.59	0.16
310	SLU 38	-554	24	6086	-5.51	-25.62	0.16
310	SLU 39	-614	24	6281	-5.58	-28.53	0.16
310	SLU 40	-614	24	6280	-5.58	-28.56	0.16
310	SLU 41	-600	24	6326	-5.67	-27.79	0.16
310	SLU 42	-600	24	6325	-5.67	-27.82	0.16
310	SLU 43	-562	22	5908	-5.27	-26.18	0.15
310	SLU 44	-562	22	5906	-5.26	-26.23	0.15
310	SLU 45	-554	23	6006	-5.41	-25.73	0.16
310	SLU 46	-554	23	6005	-5.41	-25.76	0.16
310	SLU 47	-548	23	5952	-5.36	-25.49	0.15
310	SLU 48	-540	23	6051	-5.5	-25	0.16
310	SLU 49	-540	23	6051	-5.5	-25.02	0.16
310	SLU 50	-534	23	5998	-5.45	-24.7	0.16
310	SLU 51	-534	23	5998	-5.45	-24.73	0.16
310	SLU 52	-636	25	6571	-5.84	-29.65	0.17
310	SLU 53	-628	26	6671	-5.99	-29.15	0.17
310	SLU 54	-628	26	6670	-5.98	-29.18	0.17
310	SLU 55	-622	25	6617	-5.93	-28.91	0.17
310	SLU 56	-614	26	6716	-6.08	-28.42	0.17
310	SLU 57	-614	26	6716	-6.07	-28.45	0.17
310	SLU 58	-608	26	6663	-6.03	-28.13	0.17
310	SLU 59	-608	26	6663	-6.03	-28.15	0.17
310	SLU 60	-667	26	6857	-6.09	-31.07	0.18
310	SLU 61	-667	26	6857	-6.09	-31.1	0.18
310	SLU 62	-653	27	6903	-6.18	-30.33	0.18
310	SLU 63	-653	27	6902	-6.18	-30.36	0.18
310	SLU 64	-622	25	6530	-5.83	-28.95	0.17
310	SLU 65	-623	25	6528	-5.82	-29	0.17
310	SLU 66	-614	25	6628	-5.97	-28.51	0.17
310	SLU 67	-614	25	6627	-5.96	-28.53	0.17

Nodo	Cont.	Reazione a traslazione			Reazione a rotazione		
Ind.	N.br.	x	y	z	x	y	z
310	SLU 68	-609	25	6574	-5.91	-28.26	0.17
310	SLU 69	-600	26	6674	-6.06	-27.77	0.17
310	SLU 70	-600	26	6673	-6.05	-27.8	0.17
310	SLU 71	-594	26	6621	-6.01	-27.48	0.17
310	SLU 72	-595	26	6620	-6.01	-27.51	0.17
310	SLU 73	-696	28	7193	-6.4	-32.42	0.18
310	SLU 74	-688	28	7293	-6.54	-31.93	0.19
310	SLU 75	-688	28	7292	-6.54	-31.96	0.19
310	SLU 76	-682	28	7239	-6.49	-31.68	0.19
310	SLU 77	-674	28	7339	-6.63	-31.19	0.19
310	SLU 78	-674	28	7338	-6.63	-31.22	0.19
310	SLU 79	-668	28	7286	-6.59	-30.9	0.19
310	SLU 80	-668	28	7285	-6.58	-30.93	0.19
310	SLU 81	-728	29	7480	-6.65	-33.84	0.19
310	SLU 82	-728	29	7479	-6.65	-33.87	0.19
310	SLU 83	-714	29	7525	-6.74	-33.1	0.19
310	SLU 84	-714	29	7524	-6.74	-33.13	0.19
310	SLE RA 1	-466	19	4886	-4.36	-21.66	0.13
310	SLE RA 2	-466	19	4885	-4.36	-21.69	0.13
310	SLE RA 3	-460	19	4952	-4.45	-21.36	0.13
310	SLE RA 4	-460	19	4951	-4.45	-21.38	0.13
310	SLE RA 5	-456	19	4916	-4.42	-21.2	0.13
310	SLE RA 6	-451	19	4982	-4.51	-20.87	0.13
310	SLE RA 7	-451	19	4982	-4.51	-20.89	0.13
310	SLE RA 8	-447	19	4947	-4.48	-20.68	0.13
310	SLE RA 9	-447	19	4946	-4.48	-20.7	0.13
310	SLE RA 10	-515	20	5329	-4.74	-23.97	0.14
310	SLE RA 11	-509	21	5395	-4.84	-23.65	0.14
310	SLE RA 12	-509	21	5395	-4.83	-23.66	0.14
310	SLE RA 13	-505	21	5359	-4.8	-23.48	0.14
310	SLE RA 14	-500	21	5425	-4.9	-23.15	0.14
310	SLE RA 15	-500	21	5425	-4.9	-23.17	0.14
310	SLE RA 16	-496	21	5390	-4.87	-22.96	0.14
310	SLE RA 17	-496	21	5390	-4.86	-22.98	0.14
310	SLE RA 18	-536	21	5519	-4.91	-24.92	0.14
310	SLE RA 19	-536	21	5519	-4.91	-24.94	0.14
310	SLE RA 20	-526	21	5550	-4.97	-24.43	0.14
310	SLE RA 21	-526	21	5549	-4.97	-24.45	0.14
310	SLE FR 1	-466	19	4886	-4.36	-21.66	0.13
310	SLE FR 2	-466	19	4886	-4.36	-21.67	0.13
310	SLE FR 3	-462	19	4898	-4.39	-21.47	0.13
310	SLE FR 4	-487	19	5076	-4.52	-22.65	0.13
310	SLE FR 5	-483	19	5088	-4.55	-22.44	0.13
310	SLE FR 6	-501	20	5203	-4.63	-23.29	0.13
310	SLE QP 1	-466	19	4886	-4.36	-21.66	0.13
310	SLE QP 2	-487	19	5076	-4.53	-22.64	0.13
310	SLD 1	179	25	4494	-7.7	17.79	0.15
310	SLD 2	179	25	4494	-7.7	17.79	0.15
310	SLD 3	326	30	4932	-5.06	10.75	0.18
310	SLD 4	326	30	4932	-5.06	10.75	0.18
310	SLD 5	-510	14	4238	-9.48	0.18	0.08
310	SLD 6	-510	14	4238	-9.48	0.18	0.08
310	SLD 7	-20	30	5697	-0.69	-23.31	0.2
310	SLD 8	-20	30	5697	-0.69	-23.31	0.2
310	SLD 9	-953	9	4456	-8.36	-21.97	0.06
310	SLD 10	-953	9	4456	-8.36	-21.97	0.06
310	SLD 11	-463	25	5915	0.43	-45.45	0.18
310	SLD 12	-463	25	5915	0.43	-45.45	0.18
310	SLD 13	-1299	9	5221	-3.99	-56.03	0.08
310	SLD 14	-1299	9	5221	-3.99	-56.03	0.08
310	SLD 15	-1152	13	5658	-1.35	-63.07	0.12
310	SLD 16	-1152	13	5658	-1.35	-63.07	0.12
310	SLV 1	1018	32	3667	-12.02	69.81	0.16
310	SLV 2	1018	32	3667	-12.02	69.81	0.16
310	SLV 3	1371	44	4749	-5.6	52.82	0.25
310	SLV 4	1371	44	4749	-5.6	52.82	0.25
310	SLV 5	-571	6	3013	-16.51	30.87	0.01
310	SLV 6	-571	6	3013	-16.51	30.87	0.01
310	SLV 7	606	45	6618	4.89	-25.77	0.29
310	SLV 8	606	45	6618	4.89	-25.77	0.29
310	SLV 9	-1580	-6	3534	-13.94	-19.51	-0.03
310	SLV 10	-1580	-6	3534	-13.94	-19.51	-0.03
310	SLV 11	-402	33	7139	7.46	-76.15	0.25
310	SLV 12	-402	33	7139	7.46	-76.15	0.25
310	SLV 13	-2345	-5	5403	-3.45	-98.1	0.01
310	SLV 14	-2345	-5	5403	-3.45	-98.1	0.01
310	SLV 15	-1991	6	6485	2.97	-115.09	0.1
310	SLV 16	-1991	6	6485	2.97	-115.09	0.1
312	SLU 1	-766	159	7270	408.29	180.53	-44.5
312	SLU 2	-767	154	7279	410.1	180.57	-44.38
312	SLU 3	-774	168	7415	416.19	184.99	-45.9
312	SLU 4	-774	165	7421	417.27	185.01	-45.83
312	SLU 5	-765	162	7339	413.09	182.97	-45.31
312	SLU 6	-772	176	7475	419.17	187.39	-46.83
312	SLU 7	-772	173	7480	420.26	187.41	-46.76
312	SLU 8	-762	175	7390	414.27	185.35	-46.36
312	SLU 9	-763	172	7396	415.35	185.37	-46.29
312	SLU 10	-881	183	8312	466.35	206.2	-50.88
312	SLU 11	-889	197	8449	472.44	210.62	-52.4
312	SLU 12	-889	194	8454	473.52	210.63	-52.33
312	SLU 13	-880	191	8372	469.34	208.6	-51.82

Nodo	Cont.	Reazione a traslazione			Reazione a rotazione		
Ind.	N.br.	x	y	z	x	y	z
312	SLU 14	-887	205	8509	475.43	213.02	-53.33
312	SLU 15	-887	202	8514	476.51	213.04	-53.26
312	SLU 16	-877	204	8424	470.52	210.98	-52.87
312	SLU 17	-877	201	8429	471.6	211	-52.79
312	SLU 18	-931	200	8747	488.65	217.15	-53.79
312	SLU 19	-931	197	8752	489.73	217.17	-53.72
312	SLU 20	-929	209	8807	491.64	219.55	-54.72
312	SLU 21	-929	206	8812	492.72	219.57	-54.65
312	SLU 22	-869	186	8227	460.51	204.51	-50.59
312	SLU 23	-869	181	8236	462.32	204.54	-50.48
312	SLU 24	-877	195	8372	468.41	208.96	-51.99
312	SLU 25	-877	192	8377	469.49	208.98	-51.92
312	SLU 26	-867	189	8296	465.31	206.95	-51.41
312	SLU 27	-875	203	8432	471.39	211.37	-52.93
312	SLU 28	-875	200	8437	472.48	211.39	-52.86
312	SLU 29	-865	202	8347	466.49	209.32	-52.46
312	SLU 30	-865	199	8352	467.57	209.34	-52.39
312	SLU 31	-984	210	9269	518.57	230.17	-56.98
312	SLU 32	-992	224	9405	524.66	234.59	-58.5
312	SLU 33	-992	221	9410	525.74	234.61	-58.43
312	SLU 34	-982	218	9329	521.56	232.58	-57.91
312	SLU 35	-990	233	9465	527.65	237	-59.43
312	SLU 36	-990	230	9470	528.73	237.02	-59.36
312	SLU 37	-980	232	9380	522.74	234.95	-58.96
312	SLU 38	-980	229	9385	523.82	234.97	-58.89
312	SLU 39	-1034	228	9703	540.87	241.12	-59.88
312	SLU 40	-1034	225	9708	541.95	241.14	-59.81
312	SLU 41	-1032	236	9763	543.86	243.53	-60.81
312	SLU 42	-1032	233	9768	544.94	243.55	-60.74
312	SLU 43	-961	197	9124	512.87	226.47	-55.76
312	SLU 44	-961	192	9132	514.68	226.51	-55.64
312	SLU 45	-968	206	9269	520.77	230.93	-57.16
312	SLU 46	-968	203	9274	521.86	230.95	-57.09
312	SLU 47	-959	200	9192	517.67	228.91	-56.58
312	SLU 48	-966	214	9329	523.76	233.33	-58.09
312	SLU 49	-966	212	9334	524.84	233.35	-58.02
312	SLU 50	-957	213	9244	518.85	231.29	-57.62
312	SLU 51	-957	211	9249	519.94	231.31	-57.55
312	SLU 52	-1076	221	10166	570.93	252.14	-62.15
312	SLU 53	-1083	235	10302	577.02	256.56	-63.66
312	SLU 54	-1083	232	10307	578.11	256.58	-63.59
312	SLU 55	-1074	229	10226	573.92	254.54	-63.08
312	SLU 56	-1081	244	10362	580.01	258.96	-64.6
312	SLU 57	-1081	241	10367	581.09	258.98	-64.52
312	SLU 58	-1072	243	10277	575.1	256.92	-64.13
312	SLU 59	-1072	240	10282	576.19	256.94	-64.06
312	SLU 60	-1125	239	10600	593.23	263.09	-65.05
312	SLU 61	-1125	236	10605	594.32	263.11	-64.98
312	SLU 62	-1123	247	10660	596.22	265.5	-65.98
312	SLU 63	-1123	244	10665	597.31	265.51	-65.91
312	SLU 64	-1064	224	10080	565.09	250.45	-61.86
312	SLU 65	-1064	219	10089	566.9	250.48	-61.74
312	SLU 66	-1071	233	10225	572.99	254.9	-63.26
312	SLU 67	-1071	230	10230	574.08	254.92	-63.19
312	SLU 68	-1062	228	10149	569.89	252.89	-62.67
312	SLU 69	-1069	242	10285	575.98	257.31	-64.19
312	SLU 70	-1069	239	10290	577.06	257.33	-64.12
312	SLU 71	-1060	241	10200	571.07	255.26	-63.72
312	SLU 72	-1060	238	10205	572.16	255.28	-63.65
312	SLU 73	-1179	248	11122	623.15	276.11	-68.24
312	SLU 74	-1186	263	11258	629.24	280.53	-69.76
312	SLU 75	-1186	260	11264	630.33	280.55	-69.69
312	SLU 76	-1177	257	11182	626.14	278.52	-69.17
312	SLU 77	-1184	271	11318	632.23	282.94	-70.69
312	SLU 78	-1184	268	11324	633.31	282.96	-70.62
312	SLU 79	-1175	270	11234	627.32	280.89	-70.22
312	SLU 80	-1175	267	11239	628.41	280.91	-70.15
312	SLU 81	-1228	266	11556	645.45	287.06	-71.14
312	SLU 82	-1228	263	11562	646.54	287.08	-71.07
312	SLU 83	-1226	274	11616	648.44	289.47	-72.07
312	SLU 84	-1226	271	11622	649.53	289.49	-72
312	SLE RA 1	-796	166	7544	423.21	187.38	-46.24
312	SLE RA 2	-796	163	7549	424.42	187.4	-46.16
312	SLE RA 3	-801	173	7640	428.47	190.35	-47.18
312	SLE RA 4	-801	171	7644	429.2	190.36	-47.13
312	SLE RA 5	-795	169	7589	426.41	189.01	-46.78
312	SLE RA 6	-799	178	7680	430.47	191.96	-47.8
312	SLE RA 7	-799	176	7684	431.19	191.97	-47.75
312	SLE RA 8	-793	177	7624	427.19	190.59	-47.48
312	SLE RA 9	-793	175	7627	427.92	190.61	-47.44
312	SLE RA 10	-873	183	8238	461.92	204.49	-50.5
312	SLE RA 11	-877	192	8329	465.97	207.44	-51.51
312	SLE RA 12	-877	190	8333	466.7	207.45	-51.46
312	SLE RA 13	-871	188	8278	463.91	206.1	-51.12
312	SLE RA 14	-876	198	8369	467.97	209.04	-52.13
312	SLE RA 15	-876	196	8373	468.69	209.06	-52.08
312	SLE RA 16	-870	197	8313	464.69	207.68	-51.82
312	SLE RA 17	-870	195	8316	465.42	207.69	-51.77
312	SLE RA 18	-905	194	8528	476.78	211.79	-52.43
312	SLE RA 19	-905	192	8531	477.51	211.81	-52.39
312	SLE RA 20	-904	200	8568	478.77	213.4	-53.05

Nodo	Cont.	Reazione a traslazione			Reazione a rotazione		
Ind.	N.br.	x	y	z	x	y	z
312	SLE RA 21	-904	198	8571	479.5	213.41	-53.01
312	SLE FR 1	-796	166	7544	423.21	187.38	-46.24
312	SLE FR 2	-796	166	7545	423.45	187.39	-46.23
312	SLE FR 3	-795	169	7560	424.01	188.03	-46.49
312	SLE FR 4	-829	174	7840	439.52	194.71	-48.08
312	SLE FR 5	-828	177	7855	440.08	195.35	-48.35
312	SLE FR 6	-851	180	8036	450	199.59	-49.34
312	SLE QP 1	-796	166	7544	423.21	187.38	-46.24
312	SLE QP 2	-829	175	7839	439.28	194.71	-48.1
312	SLD 1	-403	847	6653	277.89	215.32	-83.52
312	SLD 2	-403	847	6653	277.89	215.32	-83.52
312	SLD 3	-489	469	7526	405.05	238.36	-68.11
312	SLD 4	-489	469	7526	405.05	238.36	-68.11
312	SLD 5	-570	951	6160	198	165.95	-82.1
312	SLD 6	-570	951	6160	198	165.95	-82.1
312	SLD 7	-857	-312	9069	621.88	242.75	-30.73
312	SLD 8	-857	-312	9069	621.88	242.75	-30.73
312	SLD 9	-800	661	6609	256.69	146.67	-65.47
312	SLD 10	-800	661	6609	256.69	146.67	-65.47
312	SLD 11	-1087	-602	9518	680.56	223.47	-14.1
312	SLD 12	-1087	-602	9518	680.56	223.47	-14.1
312	SLD 13	-1169	-119	8152	473.51	151.05	-28.09
312	SLD 14	-1169	-119	8152	473.51	151.05	-28.09
312	SLD 15	-1255	-498	9025	600.67	174.09	-12.68
312	SLD 16	-1255	-498	9025	600.67	174.09	-12.68
312	SLV 1	155	1722	5020	64.47	240.4	-129.41
312	SLV 2	155	1722	5020	64.47	240.4	-129.41
312	SLV 3	-65	833	7143	363.94	295.93	-92.9
312	SLV 4	-65	833	7143	363.94	295.93	-92.9
312	SLV 5	-200	1987	3773	-127.36	124.19	-127.86
312	SLV 6	-200	1987	3773	-127.36	124.19	-127.86
312	SLV 7	-933	-976	10850	870.88	309.3	-6.17
312	SLV 8	-933	-976	10850	870.88	309.3	-6.17
312	SLV 9	-724	1326	4828	7.68	80.12	-90.03
312	SLV 10	-724	1326	4828	7.68	80.12	-90.03
312	SLV 11	-1457	-1638	11905	1005.93	265.22	31.66
312	SLV 12	-1457	-1638	11905	1005.93	265.22	31.66
312	SLV 13	-1592	-483	8535	514.62	93.48	-3.3
312	SLV 14	-1592	-483	8535	514.62	93.48	-3.3
312	SLV 15	-1812	-1372	10658	814.09	149.02	33.21
312	SLV 16	-1812	-1372	10658	814.09	149.02	33.21
313	SLU 1	942	5	3610	-6.89	29.71	0.98
313	SLU 2	945	5	3622	-6.79	29.76	0.96
313	SLU 3	961	5	3688	-7.19	30.27	1.02
313	SLU 4	962	5	3695	-7.13	30.3	1.01
313	SLU 5	953	5	3663	-7.01	29.98	0.99
313	SLU 6	969	6	3728	-7.4	30.5	1.05
313	SLU 7	971	5	3735	-7.35	30.53	1.04
313	SLU 8	959	6	3690	-7.32	30.16	1.04
313	SLU 9	961	5	3698	-7.26	30.19	1.03
313	SLU 10	1084	6	4148	-7.78	34.19	1.11
313	SLU 11	1100	6	4213	-8.17	34.7	1.16
313	SLU 12	1101	6	4221	-8.12	34.73	1.15
313	SLU 13	1092	6	4188	-8	34.41	1.14
313	SLU 14	1108	7	4253	-8.39	34.93	1.2
313	SLU 15	1110	6	4261	-8.33	34.95	1.19
313	SLU 16	1098	7	4216	-8.31	34.59	1.18
313	SLU 17	1100	6	4223	-8.25	34.62	1.17
313	SLU 18	1141	6	4361	-8.3	36.04	1.18
313	SLU 19	1142	6	4368	-8.24	36.06	1.17
313	SLU 20	1149	7	4401	-8.51	36.26	1.21
313	SLU 21	1151	6	4408	-8.46	36.29	1.2
313	SLU 22	1067	6	4088	-7.89	33.7	1.12
313	SLU 23	1070	6	4101	-7.8	33.75	1.11
313	SLU 24	1086	6	4166	-8.19	34.26	1.17
313	SLU 25	1087	6	4174	-8.13	34.29	1.16
313	SLU 26	1078	6	4141	-8.01	33.97	1.14
313	SLU 27	1094	7	4206	-8.4	34.49	1.2
313	SLU 28	1096	6	4214	-8.35	34.52	1.19
313	SLU 29	1084	7	4168	-8.32	34.15	1.19
313	SLU 30	1086	6	4176	-8.26	34.18	1.18
313	SLU 31	1209	7	4627	-8.78	38.17	1.25
313	SLU 32	1225	7	4692	-9.18	38.69	1.31
313	SLU 33	1226	7	4699	-9.12	38.72	1.3
313	SLU 34	1218	7	4667	-9	38.4	1.28
313	SLU 35	1233	8	4732	-9.39	38.92	1.34
313	SLU 36	1235	7	4740	-9.33	38.94	1.33
313	SLU 37	1223	8	4694	-9.31	38.58	1.33
313	SLU 38	1225	7	4702	-9.25	38.61	1.32
313	SLU 39	1266	8	4839	-9.3	40.03	1.33
313	SLU 40	1268	7	4847	-9.24	40.05	1.32
313	SLU 41	1274	8	4879	-9.52	40.25	1.36
313	SLU 42	1276	7	4887	-9.46	40.28	1.35
313	SLU 43	1182	6	4528	-8.61	37.26	1.22
313	SLU 44	1185	6	4541	-8.52	37.3	1.21
313	SLU 45	1200	7	4607	-8.91	37.82	1.27
313	SLU 46	1202	6	4614	-8.85	37.85	1.26
313	SLU 47	1193	6	4581	-8.73	37.53	1.24
313	SLU 48	1209	7	4647	-9.13	38.05	1.3
313	SLU 49	1210	7	4654	-9.07	38.07	1.29
313	SLU 50	1199	7	4609	-9.04	37.71	1.29

Nodo	Cont.	Reazione a traslazione			Reazione a rotazione		
Ind.	N.br.	x	y	z	x	y	z
313	SLU 51	1200	6	4616	-8.99	37.74	1.28
313	SLU 52	1324	7	5067	-9.5	41.73	1.35
313	SLU 53	1339	8	5132	-9.9	42.25	1.41
313	SLU 54	1341	7	5140	-9.84	42.27	1.4
313	SLU 55	1332	7	5107	-9.72	41.96	1.38
313	SLU 56	1348	8	5172	-10.11	42.47	1.44
313	SLU 57	1349	8	5180	-10.06	42.5	1.43
313	SLU 58	1338	8	5134	-10.03	42.14	1.43
313	SLU 59	1339	7	5142	-9.97	42.16	1.42
313	SLU 60	1380	8	5279	-10.02	43.58	1.43
313	SLU 61	1382	7	5287	-9.96	43.61	1.42
313	SLU 62	1389	8	5320	-10.24	43.81	1.46
313	SLU 63	1391	8	5327	-10.18	43.84	1.45
313	SLU 64	1307	7	5007	-9.61	41.25	1.37
313	SLU 65	1310	7	5020	-9.52	41.29	1.35
313	SLU 66	1325	8	5085	-9.91	41.81	1.41
313	SLU 67	1327	7	5093	-9.86	41.84	1.4
313	SLU 68	1318	7	5060	-9.73	41.52	1.38
313	SLU 69	1334	8	5125	-10.13	42.04	1.44
313	SLU 70	1336	8	5133	-10.07	42.06	1.43
313	SLU 71	1324	8	5087	-10.04	41.7	1.43
313	SLU 72	1326	7	5095	-9.99	41.73	1.42
313	SLU 73	1449	8	5545	-10.51	45.72	1.49
313	SLU 74	1465	9	5611	-10.9	46.24	1.55
313	SLU 75	1466	8	5618	-10.84	46.26	1.54
313	SLU 76	1457	8	5586	-10.72	45.95	1.53
313	SLU 77	1473	9	5651	-11.11	46.46	1.58
313	SLU 78	1475	9	5658	-11.06	46.49	1.57
313	SLU 79	1463	9	5613	-11.03	46.13	1.57
313	SLU 80	1465	8	5621	-10.97	46.15	1.56
313	SLU 81	1506	9	5758	-11.02	47.57	1.57
313	SLU 82	1507	8	5766	-10.97	47.6	1.56
313	SLU 83	1514	9	5798	-11.24	47.8	1.6
313	SLU 84	1516	9	5806	-11.18	47.83	1.59
313	SLE RA 1	978	5	3746	-7.17	30.85	1.02
313	SLE RA 2	980	5	3755	-7.11	30.88	1.01
313	SLE RA 3	990	6	3798	-7.37	31.23	1.05
313	SLE RA 4	991	5	3803	-7.34	31.25	1.04
313	SLE RA 5	985	5	3782	-7.26	31.03	1.03
313	SLE RA 6	996	6	3825	-7.52	31.38	1.07
313	SLE RA 7	997	6	3830	-7.48	31.4	1.06
313	SLE RA 8	989	6	3800	-7.46	31.15	1.06
313	SLE RA 9	990	6	3805	-7.42	31.17	1.06
313	SLE RA 10	1072	6	4105	-7.77	33.83	1.1
313	SLE RA 11	1083	6	4149	-8.03	34.18	1.14
313	SLE RA 12	1084	6	4154	-7.99	34.2	1.14
313	SLE RA 13	1078	6	4132	-7.91	33.98	1.13
313	SLE RA 14	1089	6	4176	-8.18	34.33	1.16
313	SLE RA 15	1090	6	4181	-8.14	34.35	1.16
313	SLE RA 16	1082	6	4150	-8.12	34.1	1.16
313	SLE RA 17	1083	6	4155	-8.08	34.12	1.15
313	SLE RA 18	1110	6	4247	-8.11	35.07	1.16
313	SLE RA 19	1111	6	4252	-8.08	35.09	1.15
313	SLE RA 20	1116	6	4274	-8.26	35.22	1.18
313	SLE RA 21	1117	6	4279	-8.22	35.24	1.17
313	SLE FR 1	978	5	3746	-7.17	30.85	1.02
313	SLE FR 2	978	5	3748	-7.16	30.86	1.02
313	SLE FR 3	980	5	3757	-7.23	30.91	1.03
313	SLE FR 4	1018	6	3898	-7.44	32.12	1.06
313	SLE FR 5	1020	6	3907	-7.51	32.18	1.07
313	SLE FR 6	1044	6	3997	-7.64	32.96	1.09
313	SLE QP 1	978	5	3746	-7.17	30.85	1.02
313	SLE QP 2	1018	6	3897	-7.46	32.12	1.06
313	SLD 1	1488	2	5242	-2.62	49.54	0.17
313	SLD 2	1488	2	5242	-2.62	49.54	0.17
313	SLD 3	1595	38	5673	-8.04	52.49	1.19
313	SLD 4	1595	38	5673	-8.04	52.49	1.19
313	SLD 5	996	-51	3646	2.21	32.87	-0.74
313	SLD 6	996	-51	3646	2.21	32.87	-0.74
313	SLD 7	1353	71	5084	-15.84	42.7	2.64
313	SLD 8	1353	71	5084	-15.84	42.7	2.64
313	SLD 9	682	-60	2709	0.93	21.53	-0.52
313	SLD 10	682	-60	2709	0.93	21.53	-0.52
313	SLD 11	1039	62	4147	-17.12	31.36	2.86
313	SLD 12	1039	62	4147	-17.12	31.36	2.86
313	SLD 13	440	-27	2120	-6.88	11.74	0.93
313	SLD 14	440	-27	2120	-6.88	11.74	0.93
313	SLD 15	547	10	2551	-12.29	14.69	1.95
313	SLD 16	547	10	2551	-12.29	14.69	1.95
313	SLV 1	2079	-6	6929	4.66	71.4	-1.18
313	SLV 2	2079	-6	6929	4.66	71.4	-1.18
313	SLV 3	2341	88	7970	-9.15	78.88	1.42
313	SLV 4	2341	88	7970	-9.15	78.88	1.42
313	SLV 5	939	-140	3227	17.11	32.55	-3.54
313	SLV 6	939	-140	3227	17.11	32.55	-3.54
313	SLV 7	1812	173	6698	-28.9	57.5	5.1
313	SLV 8	1812	173	6698	-28.9	57.5	5.1
313	SLV 9	223	-162	1095	13.99	6.74	-2.98
313	SLV 10	223	-162	1095	13.99	6.74	-2.98
313	SLV 11	1097	152	4566	-32.03	31.68	5.66
313	SLV 12	1097	152	4566	-32.03	31.68	5.66

Nodo	Cont.	Reazione a traslazione			Reazione a rotazione		
Ind.	N.br.	x	y	z	x	y	z
313	SLV 13	-306	-77	-177	-5.76	-14.65	0.71
313	SLV 14	-306	-77	-177	-5.76	-14.65	0.71
313	SLV 15	-44	17	864	-19.57	-7.17	3.3
313	SLV 16	-44	17	864	-19.57	-7.17	3.3
314	SLU 1	453	21	5941	-14.51	14.19	-0.05
314	SLU 2	455	21	5957	-14.42	14.39	-0.05
314	SLU 3	455	22	6086	-15.12	13.99	-0.05
314	SLU 4	456	22	6096	-15.06	14.11	-0.05
314	SLU 5	453	21	6041	-14.85	14.09	-0.05
314	SLU 6	453	22	6170	-15.55	13.69	-0.05
314	SLU 7	454	22	6180	-15.49	13.81	-0.05
314	SLU 8	449	22	6110	-15.37	13.6	-0.05
314	SLU 9	450	22	6119	-15.32	13.71	-0.05
314	SLU 10	524	24	6809	-16.41	16.65	-0.05
314	SLU 11	524	25	6938	-17.1	16.25	-0.06
314	SLU 12	525	25	6948	-17.05	16.37	-0.06
314	SLU 13	522	24	6893	-16.84	16.35	-0.06
314	SLU 14	522	25	7023	-17.54	15.95	-0.06
314	SLU 15	523	25	7032	-17.48	16.07	-0.06
314	SLU 16	518	25	6962	-17.36	15.85	-0.06
314	SLU 17	519	25	6971	-17.31	15.97	-0.06
314	SLU 18	551	25	7158	-17.35	17.42	-0.06
314	SLU 19	553	25	7168	-17.3	17.54	-0.06
314	SLU 20	549	26	7243	-17.78	17.12	-0.06
314	SLU 21	551	26	7252	-17.73	17.24	-0.06
314	SLU 22	510	24	6726	-16.53	15.86	-0.06
314	SLU 23	512	24	6742	-16.44	16.06	-0.05
314	SLU 24	512	25	6871	-17.14	15.66	-0.06
314	SLU 25	513	25	6881	-17.08	15.78	-0.06
314	SLU 26	510	24	6826	-16.87	15.76	-0.06
314	SLU 27	510	25	6956	-17.57	15.36	-0.06
314	SLU 28	511	25	6965	-17.51	15.48	-0.06
314	SLU 29	506	25	6895	-17.4	15.27	-0.06
314	SLU 30	507	25	6904	-17.34	15.38	-0.06
314	SLU 31	581	27	7594	-18.43	18.32	-0.06
314	SLU 32	581	28	7724	-19.13	17.92	-0.06
314	SLU 33	582	28	7733	-19.07	18.04	-0.06
314	SLU 34	579	27	7679	-18.86	18.02	-0.06
314	SLU 35	579	28	7808	-19.56	17.62	-0.07
314	SLU 36	580	28	7817	-19.5	17.74	-0.07
314	SLU 37	575	28	7747	-19.38	17.52	-0.06
314	SLU 38	576	28	7757	-19.33	17.64	-0.06
314	SLU 39	608	28	7944	-19.37	19.09	-0.06
314	SLU 40	609	28	7953	-19.32	19.21	-0.06
314	SLU 41	606	29	8028	-19.8	18.79	-0.07
314	SLU 42	607	29	8038	-19.75	18.91	-0.07
314	SLU 43	570	26	7454	-18.17	17.87	-0.06
314	SLU 44	572	26	7470	-18.08	18.07	-0.06
314	SLU 45	572	27	7599	-18.78	17.68	-0.06
314	SLU 46	573	27	7609	-18.72	17.8	-0.06
314	SLU 47	570	27	7554	-18.51	17.77	-0.06
314	SLU 48	570	28	7683	-19.21	17.38	-0.06
314	SLU 49	571	28	7693	-19.15	17.5	-0.06
314	SLU 50	566	27	7623	-19.04	17.28	-0.06
314	SLU 51	567	27	7632	-18.98	17.4	-0.06
314	SLU 52	640	29	8322	-20.07	20.33	-0.07
314	SLU 53	641	30	8451	-20.77	19.93	-0.07
314	SLU 54	642	30	8461	-20.71	20.05	-0.07
314	SLU 55	638	29	8406	-20.5	20.03	-0.07
314	SLU 56	639	31	8536	-21.2	19.64	-0.07
314	SLU 57	640	30	8545	-21.14	19.76	-0.07
314	SLU 58	634	30	8475	-21.02	19.54	-0.07
314	SLU 59	636	30	8484	-20.97	19.66	-0.07
314	SLU 60	668	30	8671	-21.01	21.1	-0.07
314	SLU 61	669	30	8681	-20.96	21.22	-0.07
314	SLU 62	666	31	8756	-21.44	20.8	-0.07
314	SLU 63	667	31	8765	-21.39	20.92	-0.07
314	SLU 64	626	29	8239	-20.19	19.54	-0.07
314	SLU 65	628	29	8255	-20.1	19.74	-0.07
314	SLU 66	628	30	8385	-20.8	19.35	-0.07
314	SLU 67	630	30	8394	-20.74	19.47	-0.07
314	SLU 68	626	30	8339	-20.53	19.45	-0.07
314	SLU 69	626	31	8469	-21.23	19.05	-0.07
314	SLU 70	628	30	8478	-21.17	19.17	-0.07
314	SLU 71	622	30	8408	-21.06	18.95	-0.07
314	SLU 72	624	30	8418	-21	19.07	-0.07
314	SLU 73	697	32	9107	-22.09	22	-0.07
314	SLU 74	697	33	9237	-22.79	21.61	-0.08
314	SLU 75	698	33	9246	-22.73	21.72	-0.08
314	SLU 76	695	32	9192	-22.52	21.7	-0.08
314	SLU 77	695	34	9321	-23.22	21.31	-0.08
314	SLU 78	696	33	9330	-23.16	21.43	-0.08
314	SLU 79	691	33	9260	-23.04	21.21	-0.08
314	SLU 80	692	33	9270	-22.99	21.33	-0.08
314	SLU 81	725	33	9457	-23.03	22.77	-0.08
314	SLU 82	726	33	9466	-22.98	22.89	-0.08
314	SLU 83	723	34	9541	-23.47	22.47	-0.08
314	SLU 84	724	34	9551	-23.41	22.59	-0.08
314	SLE RA 1	469	22	6165	-15.09	14.67	-0.05
314	SLE RA 2	471	22	6176	-15.03	14.8	-0.05
314	SLE RA 3	471	22	6262	-15.49	14.54	-0.05

Nodo	Cont.	Reazione a traslazione			Reazione a rotazione		
Ind.	N.br.	x	y	z	x	y	z
314	SLE RA 4	472	22	6268	-15.46	14.61	-0.05
314	SLE RA 5	469	22	6232	-15.32	14.6	-0.05
314	SLE RA 6	469	23	6318	-15.78	14.34	-0.05
314	SLE RA 7	470	23	6325	-15.74	14.42	-0.05
314	SLE RA 8	467	23	6278	-15.66	14.27	-0.05
314	SLE RA 9	467	22	6284	-15.63	14.35	-0.05
314	SLE RA 10	517	24	6744	-16.35	16.3	-0.05
314	SLE RA 11	517	24	6830	-16.82	16.04	-0.06
314	SLE RA 12	517	24	6837	-16.78	16.12	-0.06
314	SLE RA 13	515	24	6800	-16.64	16.11	-0.06
314	SLE RA 14	515	25	6886	-17.11	15.84	-0.06
314	SLE RA 15	516	25	6893	-17.07	15.92	-0.06
314	SLE RA 16	513	25	6846	-16.99	15.78	-0.06
314	SLE RA 17	513	24	6852	-16.95	15.86	-0.06
314	SLE RA 18	535	24	6977	-16.98	16.82	-0.06
314	SLE RA 19	536	24	6983	-16.95	16.9	-0.06
314	SLE RA 20	534	25	7033	-17.27	16.62	-0.06
314	SLE RA 21	534	25	7040	-17.23	16.7	-0.06
314	SLE FR 1	469	22	6165	-15.09	14.67	-0.05
314	SLE FR 2	470	22	6168	-15.08	14.69	-0.05
314	SLE FR 3	469	22	6188	-15.2	14.59	-0.05
314	SLE FR 4	489	23	6411	-15.64	15.34	-0.05
314	SLE FR 5	488	23	6431	-15.77	15.23	-0.05
314	SLE FR 6	502	23	6571	-16.04	15.74	-0.05
314	SLE QP 1	469	22	6165	-15.09	14.67	-0.05
314	SLE QP 2	489	23	6409	-15.66	15.31	-0.05
314	SLD 1	1014	13	7680	-10.34	42.21	-0.03
314	SLD 2	1014	13	7680	-10.34	42.21	-0.03
314	SLD 3	1116	22	8353	-13.91	48.8	-0.05
314	SLD 4	1116	22	8353	-13.91	48.8	-0.05
314	SLD 5	492	7	5770	-8.66	13.38	-0.01
314	SLD 6	492	7	5770	-8.66	13.38	-0.01
314	SLD 7	831	35	8013	-20.54	35.36	-0.09
314	SLD 8	831	35	8013	-20.54	35.36	-0.09
314	SLD 9	147	10	4805	-10.78	-4.73	-0.02
314	SLD 10	147	10	4805	-10.78	-4.73	-0.02
314	SLD 11	486	38	7048	-22.66	17.24	-0.1
314	SLD 12	486	38	7048	-22.66	17.24	-0.1
314	SLD 13	-138	23	4465	-17.41	-18.17	-0.05
314	SLD 14	-138	23	4465	-17.41	-18.17	-0.05
314	SLD 15	-36	32	5138	-20.97	-11.58	-0.08
314	SLD 16	-36	32	5138	-20.97	-11.58	-0.08
314	SLV 1	1677	0	9270	-3.16	76.15	0.01
314	SLV 2	1677	0	9270	-3.16	76.15	0.01
314	SLV 3	1921	21	10877	-11.66	91.74	-0.05
314	SLV 4	1921	21	10877	-11.66	91.74	-0.05
314	SLV 5	475	-17	4830	0.98	9.91	0.06
314	SLV 6	475	-17	4830	0.98	9.91	0.06
314	SLV 7	1289	55	10187	-27.35	61.9	-0.15
314	SLV 8	1289	55	10187	-27.35	61.9	-0.15
314	SLV 9	-311	-9	2631	-3.97	-31.27	0.04
314	SLV 10	-311	-9	2631	-3.97	-31.27	0.04
314	SLV 11	503	62	7988	-32.3	20.72	-0.16
314	SLV 12	503	62	7988	-32.3	20.72	-0.16
314	SLV 13	-943	24	1940	-19.66	-61.12	-0.05
314	SLV 14	-943	24	1940	-19.66	-61.12	-0.05
314	SLV 15	-699	45	3548	-28.16	-45.52	-0.11
314	SLV 16	-699	45	3548	-28.16	-45.52	-0.11
315	SLU 1	309	17	5443	-14.1	23.34	0.02
315	SLU 2	310	17	5449	-14.12	23.34	0.02
315	SLU 3	304	18	5591	-14.67	23.38	0.02
315	SLU 4	305	18	5595	-14.68	23.38	0.02
315	SLU 5	301	18	5544	-14.52	23.09	0.02
315	SLU 6	296	18	5686	-15.07	23.13	0.02
315	SLU 7	296	18	5690	-15.08	23.13	0.02
315	SLU 8	293	18	5633	-14.9	22.84	0.02
315	SLU 9	293	18	5636	-14.92	22.84	0.02
315	SLU 10	358	19	6219	-15.96	26.91	0.02
315	SLU 11	353	20	6360	-16.5	26.95	0.02
315	SLU 12	353	20	6364	-16.52	26.95	0.02
315	SLU 13	350	20	6314	-16.36	26.66	0.02
315	SLU 14	344	21	6455	-16.9	26.7	0.02
315	SLU 15	344	21	6459	-16.92	26.7	0.02
315	SLU 16	341	20	6402	-16.74	26.41	0.02
315	SLU 17	341	20	6406	-16.75	26.41	0.02
315	SLU 18	378	20	6542	-16.73	28.44	0.02
315	SLU 19	379	20	6546	-16.74	28.44	0.02
315	SLU 20	370	21	6637	-17.13	28.19	0.02
315	SLU 21	370	21	6641	-17.14	28.19	0.02
315	SLU 22	346	19	6160	-15.97	26.34	0.02
315	SLU 23	346	19	6166	-15.99	26.34	0.02
315	SLU 24	341	20	6307	-16.54	26.38	0.02
315	SLU 25	341	20	6311	-16.55	26.38	0.02
315	SLU 26	338	20	6261	-16.39	26.09	0.02
315	SLU 27	332	21	6402	-16.94	26.13	0.02
315	SLU 28	333	21	6406	-16.95	26.13	0.02
315	SLU 29	329	20	6349	-16.77	25.84	0.02
315	SLU 30	329	20	6353	-16.79	25.84	0.02
315	SLU 31	394	22	6936	-17.83	29.91	0.03
315	SLU 32	389	22	7077	-18.37	29.95	0.03
315	SLU 33	389	22	7081	-18.39	29.95	0.03

Nodo	Cont.	Reazione a traslazione			Reazione a rotazione		
Ind.	N.br.	x	y	z	x	y	z
315	SLU 34	386	22	7030	-18.23	29.66	0.03
315	SLU 35	381	23	7172	-18.77	29.7	0.03
315	SLU 36	381	23	7176	-18.79	29.7	0.03
315	SLU 37	377	23	7119	-18.61	29.41	0.03
315	SLU 38	378	23	7123	-18.62	29.41	0.03
315	SLU 39	415	23	7259	-18.6	31.44	0.03
315	SLU 40	415	23	7263	-18.61	31.44	0.03
315	SLU 41	406	23	7354	-19	31.19	0.03
315	SLU 42	407	23	7358	-19.01	31.19	0.03
315	SLU 43	390	21	6830	-17.7	29.32	0.02
315	SLU 44	390	21	6837	-17.71	29.32	0.02
315	SLU 45	385	22	6978	-18.26	29.36	0.03
315	SLU 46	385	22	6982	-18.27	29.36	0.03
315	SLU 47	382	22	6931	-18.11	29.07	0.03
315	SLU 48	376	23	7073	-18.66	29.11	0.03
315	SLU 49	376	23	7077	-18.67	29.11	0.03
315	SLU 50	373	22	7020	-18.49	28.82	0.03
315	SLU 51	373	22	7024	-18.51	28.82	0.03
315	SLU 52	438	24	7606	-19.55	32.89	0.03
315	SLU 53	433	24	7748	-20.1	32.93	0.03
315	SLU 54	433	24	7751	-20.11	32.93	0.03
315	SLU 55	430	24	7701	-19.95	32.64	0.03
315	SLU 56	425	25	7842	-20.5	32.68	0.03
315	SLU 57	425	25	7846	-20.51	32.68	0.03
315	SLU 58	421	25	7789	-20.33	32.39	0.03
315	SLU 59	421	25	7793	-20.34	32.39	0.03
315	SLU 60	459	25	7929	-20.32	34.41	0.03
315	SLU 61	459	25	7933	-20.33	34.42	0.03
315	SLU 62	450	25	8024	-20.72	34.17	0.03
315	SLU 63	450	25	8028	-20.73	34.17	0.03
315	SLU 64	426	24	7547	-19.56	32.31	0.03
315	SLU 65	427	24	7553	-19.58	32.31	0.03
315	SLU 66	421	24	7695	-20.13	32.35	0.03
315	SLU 67	421	24	7699	-20.14	32.35	0.03
315	SLU 68	418	24	7648	-19.98	32.06	0.03
315	SLU 69	413	25	7789	-20.53	32.1	0.03
315	SLU 70	413	25	7793	-20.54	32.1	0.03
315	SLU 71	409	25	7736	-20.36	31.81	0.03
315	SLU 72	410	25	7740	-20.38	31.81	0.03
315	SLU 73	475	26	8323	-21.42	35.88	0.03
315	SLU 74	469	27	8464	-21.96	35.92	0.03
315	SLU 75	470	27	8468	-21.98	35.92	0.03
315	SLU 76	466	26	8418	-21.82	35.63	0.03
315	SLU 77	461	27	8559	-22.36	35.67	0.03
315	SLU 78	461	27	8563	-22.38	35.67	0.03
315	SLU 79	458	27	8506	-22.2	35.38	0.03
315	SLU 80	458	27	8510	-22.21	35.38	0.03
315	SLU 81	495	27	8646	-22.19	37.41	0.03
315	SLU 82	495	27	8650	-22.2	37.41	0.03
315	SLU 83	487	27	8741	-22.59	37.16	0.03
315	SLU 84	487	27	8745	-22.6	37.16	0.03
315	SLE RA 1	320	18	5648	-14.64	24.2	0.02
315	SLE RA 2	320	18	5652	-14.65	24.2	0.02
315	SLE RA 3	316	18	5746	-15.02	24.22	0.02
315	SLE RA 4	317	18	5749	-15.02	24.22	0.02
315	SLE RA 5	314	18	5715	-14.92	24.03	0.02
315	SLE RA 6	311	19	5809	-15.28	24.06	0.02
315	SLE RA 7	311	19	5812	-15.29	24.06	0.02
315	SLE RA 8	309	18	5774	-15.17	23.86	0.02
315	SLE RA 9	309	18	5777	-15.18	23.86	0.02
315	SLE RA 10	352	19	6165	-15.88	26.58	0.02
315	SLE RA 11	349	20	6259	-16.24	26.6	0.02
315	SLE RA 12	349	20	6262	-16.25	26.6	0.02
315	SLE RA 13	347	20	6228	-16.14	26.41	0.02
315	SLE RA 14	343	20	6322	-16.51	26.44	0.02
315	SLE RA 15	343	20	6325	-16.51	26.44	0.02
315	SLE RA 16	341	20	6287	-16.4	26.24	0.02
315	SLE RA 17	341	20	6290	-16.4	26.24	0.02
315	SLE RA 18	366	20	6381	-16.39	27.6	0.02
315	SLE RA 19	366	20	6383	-16.4	27.6	0.02
315	SLE RA 20	360	20	6444	-16.65	27.43	0.02
315	SLE RA 21	360	20	6446	-16.66	27.43	0.02
315	SLE FR 1	320	18	5648	-14.64	24.2	0.02
315	SLE FR 2	320	18	5649	-14.64	24.2	0.02
315	SLE FR 3	318	18	5673	-14.75	24.13	0.02
315	SLE FR 4	334	18	5868	-15.17	25.22	0.02
315	SLE FR 5	331	19	5893	-15.27	25.15	0.02
315	SLE FR 6	343	19	6014	-15.51	25.9	0.02
315	SLE QP 1	320	18	5648	-14.64	24.2	0.02
315	SLE QP 2	334	18	5868	-15.16	25.22	0.02
315	SLD 1	1146	5	6159	-3.59	65.09	0.01
315	SLD 2	1146	5	6159	-3.59	65.09	0.01
315	SLD 3	1046	16	6761	-14.33	59.74	0.02
315	SLD 4	1046	16	6761	-14.33	59.74	0.02
315	SLD 5	729	-1	5042	4.59	45.28	0
315	SLD 6	729	-1	5042	4.59	45.28	0
315	SLD 7	395	33	7048	-31.19	27.47	0.04
315	SLD 8	395	33	7048	-31.19	27.47	0.04
315	SLD 9	272	3	4687	0.86	22.96	0
315	SLD 10	272	3	4687	0.86	22.96	0
315	SLD 11	-62	38	6693	-34.91	5.15	0.05

Nodo	Cont.	Reazione a traslazione			Reazione a rotazione		
Ind.	N.br.	x	y	z	x	y	z
315	SLD 12	-62	38	6693	-34.91	5.15	0.05
315	SLD 13	-378	21	4974	-16	-9.31	0.02
315	SLD 14	-378	21	4974	-16	-9.31	0.02
315	SLD 15	-479	32	5576	-26.73	-14.66	0.03
315	SLD 16	-479	32	5576	-26.73	-14.66	0.03
315	SLV 1	2191	-14	6520	13.52	116.53	-0.01
315	SLV 2	2191	-14	6520	13.52	116.53	-0.01
315	SLV 3	1943	13	7942	-13.82	103.15	0.02
315	SLV 4	1943	13	7942	-13.82	103.15	0.02
315	SLV 5	1267	-32	3906	34.91	72.89	-0.04
315	SLV 6	1267	-32	3906	34.91	72.89	-0.04
315	SLV 7	440	57	8647	-56.23	28.31	0.07
315	SLV 8	440	57	8647	-56.23	28.31	0.07
315	SLV 9	227	-20	3088	25.9	22.12	-0.03
315	SLV 10	227	-20	3088	25.9	22.12	-0.03
315	SLV 11	-600	68	7829	-65.23	-22.46	0.08
315	SLV 12	-600	68	7829	-65.23	-22.46	0.08
315	SLV 13	-1275	24	3793	-16.5	-52.72	0.02
315	SLV 14	-1275	24	3793	-16.5	-52.72	0.02
315	SLV 15	-1524	51	5215	-43.84	-66.1	0.05
315	SLV 16	-1524	51	5215	-43.84	-66.1	0.05
316	SLU 1	-148	16	5129	-13.35	-12.42	0.02
316	SLU 2	-147	16	5128	-13.46	-12.3	0.02
316	SLU 3	-169	17	5276	-13.87	-13.56	0.02
316	SLU 4	-169	17	5276	-13.93	-13.48	0.02
316	SLU 5	-167	17	5227	-13.82	-13.28	0.02
316	SLU 6	-189	17	5376	-14.23	-14.53	0.03
316	SLU 7	-188	17	5376	-14.3	-14.46	0.03
316	SLU 8	-187	17	5328	-14.08	-14.37	0.03
316	SLU 9	-187	17	5328	-14.15	-14.3	0.02
316	SLU 10	-167	18	5845	-15.11	-14.03	0.03
316	SLU 11	-190	19	5994	-15.52	-15.29	0.03
316	SLU 12	-189	19	5993	-15.58	-15.21	0.03
316	SLU 13	-187	19	5945	-15.48	-15	0.03
316	SLU 14	-209	19	6094	-15.89	-16.26	0.03
316	SLU 15	-209	19	6093	-15.95	-16.19	0.03
316	SLU 16	-208	19	6046	-15.73	-16.1	0.03
316	SLU 17	-207	19	6045	-15.8	-16.03	0.03
316	SLU 18	-177	19	6154	-15.71	-14.9	0.03
316	SLU 19	-176	19	6153	-15.77	-14.82	0.03
316	SLU 20	-197	20	6254	-16.08	-15.87	0.03
316	SLU 21	-196	20	6253	-16.14	-15.8	0.03
316	SLU 22	-177	18	5800	-15.04	-14.55	0.03
316	SLU 23	-176	18	5799	-15.15	-14.42	0.03
316	SLU 24	-199	19	5948	-15.56	-15.68	0.03
316	SLU 25	-198	19	5947	-15.62	-15.6	0.03
316	SLU 26	-196	19	5899	-15.52	-15.4	0.03
316	SLU 27	-219	19	6048	-15.93	-16.65	0.03
316	SLU 28	-218	19	6047	-15.99	-16.58	0.03
316	SLU 29	-217	19	6000	-15.77	-16.5	0.03
316	SLU 30	-216	19	5999	-15.84	-16.42	0.03
316	SLU 31	-197	20	6517	-16.8	-16.15	0.03
316	SLU 32	-219	21	6665	-17.21	-17.41	0.03
316	SLU 33	-219	21	6665	-17.28	-17.33	0.03
316	SLU 34	-217	21	6616	-17.17	-17.13	0.03
316	SLU 35	-239	21	6765	-17.58	-18.38	0.03
316	SLU 36	-238	21	6765	-17.64	-18.31	0.03
316	SLU 37	-237	21	6717	-17.43	-18.23	0.03
316	SLU 38	-237	21	6717	-17.49	-18.15	0.03
316	SLU 39	-207	21	6825	-17.4	-17.02	0.03
316	SLU 40	-206	21	6824	-17.47	-16.94	0.03
316	SLU 41	-226	22	6925	-17.77	-17.99	0.03
316	SLU 42	-226	22	6924	-17.83	-17.92	0.03
316	SLU 43	-182	20	6437	-16.77	-15.42	0.03
316	SLU 44	-181	20	6436	-16.88	-15.3	0.03
316	SLU 45	-203	21	6585	-17.29	-16.56	0.03
316	SLU 46	-203	21	6584	-17.36	-16.48	0.03
316	SLU 47	-201	21	6536	-17.25	-16.28	0.03
316	SLU 48	-223	21	6684	-17.66	-17.53	0.03
316	SLU 49	-223	21	6684	-17.72	-17.46	0.03
316	SLU 50	-221	21	6637	-17.51	-17.37	0.03
316	SLU 51	-221	21	6636	-17.57	-17.3	0.03
316	SLU 52	-201	22	7153	-18.53	-17.03	0.03
316	SLU 53	-224	23	7302	-18.94	-18.29	0.03
316	SLU 54	-223	23	7301	-19.01	-18.21	0.03
316	SLU 55	-221	23	7253	-18.9	-18	0.03
316	SLU 56	-244	23	7402	-19.31	-19.26	0.03
316	SLU 57	-243	24	7401	-19.38	-19.19	0.03
316	SLU 58	-242	23	7354	-19.16	-19.1	0.03
316	SLU 59	-241	23	7354	-19.22	-19.03	0.03
316	SLU 60	-211	23	7462	-19.13	-17.9	0.03
316	SLU 61	-210	23	7461	-19.2	-17.82	0.03
316	SLU 62	-231	24	7562	-19.5	-18.87	0.03
316	SLU 63	-230	24	7561	-19.57	-18.8	0.03
316	SLU 64	-212	22	7108	-18.46	-17.55	0.03
316	SLU 65	-211	22	7107	-18.57	-17.42	0.03
316	SLU 66	-233	23	7256	-18.98	-18.68	0.03
316	SLU 67	-233	23	7255	-19.05	-18.6	0.03
316	SLU 68	-230	23	7207	-18.94	-18.4	0.03
316	SLU 69	-253	24	7356	-19.35	-19.65	0.03
316	SLU 70	-252	24	7355	-19.42	-19.58	0.03

Nodo	Cont.	Reazione a traslazione			Reazione a rotazione		
Ind.	N.br.	x	y	z	x	y	z
316	SLU 71	-251	23	7308	-19.2	-19.5	0.03
316	SLU 72	-251	23	7308	-19.26	-19.42	0.03
316	SLU 73	-231	25	7825	-20.22	-19.15	0.04
316	SLU 74	-253	25	7974	-20.64	-20.41	0.04
316	SLU 75	-253	25	7973	-20.7	-20.33	0.04
316	SLU 76	-251	25	7925	-20.59	-20.13	0.04
316	SLU 77	-273	26	8074	-21	-21.38	0.04
316	SLU 78	-273	26	8073	-21.07	-21.31	0.04
316	SLU 79	-271	25	8026	-20.85	-21.23	0.04
316	SLU 80	-271	25	8025	-20.92	-21.15	0.04
316	SLU 81	-241	25	8133	-20.82	-20.02	0.04
316	SLU 82	-240	25	8133	-20.89	-19.94	0.04
316	SLU 83	-260	26	8233	-21.19	-20.99	0.04
316	SLU 84	-260	26	8233	-21.26	-20.92	0.04
316	SLE RA 1	-156	17	5320	-13.83	-13.03	0.02
316	SLE RA 2	-156	17	5320	-13.9	-12.95	0.02
316	SLE RA 3	-171	17	5419	-14.18	-13.79	0.03
316	SLE RA 4	-170	17	5418	-14.22	-13.74	0.03
316	SLE RA 5	-169	17	5386	-14.15	-13.6	0.02
316	SLE RA 6	-184	18	5485	-14.42	-14.44	0.03
316	SLE RA 7	-183	18	5485	-14.47	-14.39	0.03
316	SLE RA 8	-183	17	5454	-14.32	-14.33	0.03
316	SLE RA 9	-182	17	5453	-14.36	-14.28	0.03
316	SLE RA 10	-169	18	5798	-15.01	-14.1	0.03
316	SLE RA 11	-184	19	5897	-15.28	-14.94	0.03
316	SLE RA 12	-184	19	5897	-15.32	-14.89	0.03
316	SLE RA 13	-182	18	5865	-15.25	-14.75	0.03
316	SLE RA 14	-197	19	5964	-15.52	-15.59	0.03
316	SLE RA 15	-197	19	5963	-15.57	-15.54	0.03
316	SLE RA 16	-196	19	5932	-15.42	-15.48	0.03
316	SLE RA 17	-196	19	5932	-15.47	-15.43	0.03
316	SLE RA 18	-176	19	6004	-15.4	-14.68	0.03
316	SLE RA 19	-175	19	6003	-15.45	-14.63	0.03
316	SLE RA 20	-189	19	6070	-15.65	-15.33	0.03
316	SLE RA 21	-188	19	6070	-15.69	-15.28	0.03
316	SLE FR 1	-156	17	5320	-13.83	-13.03	0.02
316	SLE FR 2	-156	17	5320	-13.85	-13.01	0.02
316	SLE FR 3	-162	17	5347	-13.93	-13.29	0.02
316	SLE FR 4	-162	17	5525	-14.32	-13.51	0.03
316	SLE FR 5	-167	18	5552	-14.4	-13.78	0.03
316	SLE FR 6	-166	18	5662	-14.62	-13.85	0.03
316	SLE QP 1	-156	17	5320	-13.83	-13.03	0.02
316	SLE QP 2	-162	17	5525	-14.3	-13.52	0.03
316	SLD 1	773	0	5423	-14.87	27.13	0
316	SLD 2	773	0	5423	-14.87	27.13	0
316	SLD 3	651	16	5990	2.97	21.26	0.02
316	SLD 4	651	16	5990	2.97	21.26	0.02
316	SLD 5	304	-13	4635	-41.54	7.57	-0.01
316	SLD 6	304	-13	4635	-41.54	7.57	-0.01
316	SLD 7	-104	42	6525	17.94	-11.99	0.06
316	SLD 8	-104	42	6525	17.94	-11.99	0.06
316	SLD 9	-221	-7	4526	-46.55	-15.06	-0.01
316	SLD 10	-221	-7	4526	-46.55	-15.06	-0.01
316	SLD 11	-628	47	6416	12.93	-34.62	0.06
316	SLD 12	-628	47	6416	12.93	-34.62	0.06
316	SLD 13	-975	19	5061	-31.58	-48.31	0.03
316	SLD 14	-975	19	5061	-31.58	-48.31	0.03
316	SLD 15	-1097	35	5627	-13.74	-54.18	0.05
316	SLD 16	-1097	35	5627	-13.74	-54.18	0.05
316	SLV 1	1972	-27	5301	-16.63	79.14	-0.03
316	SLV 2	1972	-27	5301	-16.63	79.14	-0.03
316	SLV 3	1678	15	6636	29.05	65.2	0.02
316	SLV 4	1678	15	6636	29.05	65.2	0.02
316	SLV 5	925	-59	3433	-84.28	35.42	-0.07
316	SLV 6	925	-59	3433	-84.28	35.42	-0.07
316	SLV 7	-56	80	7883	67.98	-11.05	0.1
316	SLV 8	-56	80	7883	67.98	-11.05	0.1
316	SLV 9	-268	-45	3167	-96.59	-16	-0.05
316	SLV 10	-268	-45	3167	-96.59	-16	-0.05
316	SLV 11	-1249	94	7617	55.67	-62.47	0.12
316	SLV 12	-1249	94	7617	55.67	-62.47	0.12
316	SLV 13	-2002	20	4414	-57.66	-92.25	0.03
316	SLV 14	-2002	20	4414	-57.66	-92.25	0.03
316	SLV 15	-2296	62	5749	-11.98	-106.19	0.08
316	SLV 16	-2296	62	5749	-11.98	-106.19	0.08
317	SLU 1	-186	15	4726	-12.35	0.95	0.02
317	SLU 2	-187	15	4718	-12.54	0.92	0.02
317	SLU 3	-212	16	4867	-12.82	0.11	0.02
317	SLU 4	-212	16	4862	-12.93	0.1	0.02
317	SLU 5	-211	16	4817	-12.87	0.02	0.02
317	SLU 6	-236	16	4966	-13.15	-0.79	0.02
317	SLU 7	-236	16	4961	-13.27	-0.81	0.02
317	SLU 8	-235	16	4924	-13.01	-0.87	0.02
317	SLU 9	-235	16	4919	-13.13	-0.88	0.02
317	SLU 10	-216	17	5370	-13.98	0.99	0.02
317	SLU 11	-241	17	5519	-14.26	0.18	0.02
317	SLU 12	-242	17	5514	-14.38	0.16	0.02
317	SLU 13	-241	17	5469	-14.32	0.08	0.02
317	SLU 14	-266	18	5618	-14.6	-0.73	0.02
317	SLU 15	-266	18	5613	-14.71	-0.74	0.02
317	SLU 16	-264	18	5576	-14.46	-0.8	0.02

Nodo	Cont.	Reazione a traslazione			Reazione a rotazione		
Ind.	N.br.	x	y	z	x	y	z
317	SLU 17	-265	18	5571	-14.57	-0.82	0.02
317	SLU 18	-229	18	5658	-14.41	1.04	0.02
317	SLU 19	-229	18	5653	-14.52	1.02	0.02
317	SLU 20	-253	18	5757	-14.74	0.13	0.02
317	SLU 21	-253	18	5752	-14.86	0.12	0.02
317	SLU 22	-225	17	5338	-13.84	0.59	0.02
317	SLU 23	-225	17	5330	-14.03	0.57	0.02
317	SLU 24	-250	17	5479	-14.31	-0.24	0.02
317	SLU 25	-250	18	5474	-14.42	-0.25	0.02
317	SLU 26	-249	17	5429	-14.36	-0.33	0.02
317	SLU 27	-274	18	5578	-14.64	-1.15	0.02
317	SLU 28	-274	18	5573	-14.76	-1.16	0.02
317	SLU 29	-273	18	5536	-14.51	-1.22	0.02
317	SLU 30	-273	18	5531	-14.62	-1.23	0.02
317	SLU 31	-255	19	5982	-15.47	0.64	0.02
317	SLU 32	-280	19	6131	-15.75	-0.18	0.02
317	SLU 33	-280	19	6126	-15.87	-0.19	0.02
317	SLU 34	-279	19	6081	-15.81	-0.27	0.02
317	SLU 35	-304	20	6230	-16.09	-1.08	0.02
317	SLU 36	-304	20	6225	-16.2	-1.1	0.02
317	SLU 37	-302	20	6188	-15.95	-1.16	0.02
317	SLU 38	-303	20	6183	-16.06	-1.17	0.02
317	SLU 39	-267	19	6269	-15.9	0.69	0.02
317	SLU 40	-267	20	6265	-16.02	0.67	0.02
317	SLU 41	-291	20	6368	-16.23	-0.22	0.02
317	SLU 42	-291	20	6364	-16.35	-0.24	0.02
317	SLU 43	-229	19	5934	-15.54	1.35	0.02
317	SLU 44	-230	19	5926	-15.73	1.33	0.02
317	SLU 45	-255	19	6075	-16.01	0.52	0.02
317	SLU 46	-255	20	6070	-16.13	0.51	0.02
317	SLU 47	-254	19	6025	-16.06	0.42	0.02
317	SLU 48	-279	20	6174	-16.34	-0.39	0.02
317	SLU 49	-279	20	6169	-16.46	-0.4	0.02
317	SLU 50	-278	20	6132	-16.21	-0.46	0.02
317	SLU 51	-278	20	6127	-16.32	-0.48	0.02
317	SLU 52	-259	21	6578	-17.17	1.39	0.03
317	SLU 53	-284	21	6727	-17.45	0.58	0.03
317	SLU 54	-284	21	6722	-17.57	0.57	0.03
317	SLU 55	-283	21	6677	-17.51	0.49	0.03
317	SLU 56	-308	22	6826	-17.79	-0.33	0.03
317	SLU 57	-309	22	6821	-17.9	-0.34	0.03
317	SLU 58	-307	22	6784	-17.65	-0.4	0.03
317	SLU 59	-307	22	6779	-17.77	-0.41	0.03
317	SLU 60	-272	21	6866	-17.6	1.44	0.03
317	SLU 61	-272	22	6861	-17.72	1.43	0.03
317	SLU 62	-296	22	6965	-17.94	0.53	0.03
317	SLU 63	-296	22	6960	-18.05	0.52	0.03
317	SLU 64	-267	21	6546	-17.03	1	0.03
317	SLU 65	-268	21	6538	-17.22	0.98	0.03
317	SLU 66	-293	21	6687	-17.5	0.17	0.03
317	SLU 67	-293	21	6682	-17.62	0.15	0.03
317	SLU 68	-292	21	6637	-17.56	0.07	0.03
317	SLU 69	-317	22	6786	-17.84	-0.74	0.03
317	SLU 70	-317	22	6781	-17.95	-0.75	0.03
317	SLU 71	-316	22	6744	-17.7	-0.82	0.03
317	SLU 72	-316	22	6739	-17.81	-0.83	0.03
317	SLU 73	-297	23	7190	-18.67	1.04	0.03
317	SLU 74	-322	23	7339	-18.95	0.23	0.03
317	SLU 75	-323	23	7334	-19.06	0.22	0.03
317	SLU 76	-322	23	7289	-19	0.13	0.03
317	SLU 77	-347	24	7438	-19.28	-0.68	0.03
317	SLU 78	-347	24	7433	-19.39	-0.69	0.03
317	SLU 79	-345	23	7396	-19.14	-0.75	0.03
317	SLU 80	-346	23	7391	-19.26	-0.77	0.03
317	SLU 81	-310	23	7477	-19.09	1.09	0.03
317	SLU 82	-310	23	7473	-19.21	1.08	0.03
317	SLU 83	-334	24	7576	-19.43	0.18	0.03
317	SLU 84	-334	24	7572	-19.54	0.17	0.03
317	SLE RA 1	-197	16	4901	-12.77	0.85	0.02
317	SLE RA 2	-198	16	4895	-12.9	0.83	0.02
317	SLE RA 3	-214	16	4995	-13.09	0.29	0.02
317	SLE RA 4	-214	16	4991	-13.16	0.28	0.02
317	SLE RA 5	-214	16	4961	-13.12	0.23	0.02
317	SLE RA 6	-230	16	5061	-13.31	-0.31	0.02
317	SLE RA 7	-230	16	5057	-13.39	-0.32	0.02
317	SLE RA 8	-230	16	5033	-13.22	-0.36	0.02
317	SLE RA 9	-230	16	5030	-13.29	-0.37	0.02
317	SLE RA 10	-217	17	5330	-13.86	0.87	0.02
317	SLE RA 11	-234	17	5429	-14.05	0.33	0.02
317	SLE RA 12	-234	17	5426	-14.13	0.32	0.02
317	SLE RA 13	-233	17	5396	-14.09	0.27	0.02
317	SLE RA 14	-250	17	5495	-14.27	-0.27	0.02
317	SLE RA 15	-250	17	5492	-14.35	-0.28	0.02
317	SLE RA 16	-249	17	5467	-14.18	-0.32	0.02
317	SLE RA 17	-249	17	5464	-14.26	-0.33	0.02
317	SLE RA 18	-226	17	5522	-14.15	0.91	0.02
317	SLE RA 19	-226	17	5519	-14.22	0.9	0.02
317	SLE RA 20	-242	18	5588	-14.37	0.3	0.02
317	SLE RA 21	-242	18	5585	-14.45	0.29	0.02
317	SLE FR 1	-197	16	4901	-12.77	0.85	0.02
317	SLE FR 2	-197	16	4900	-12.8	0.84	0.02

Nodo	Cont.	Reazione a traslazione			Reazione a rotazione		
Ind.	N.br.	x	y	z	x	y	z
317	SLE FR 3	-204	16	4927	-12.86	0.6	0.02
317	SLE FR 4	-206	16	5086	-13.21	0.86	0.02
317	SLE FR 5	-212	16	5113	-13.27	0.62	0.02
317	SLE FR 6	-211	16	5211	-13.46	0.88	0.02
317	SLE QP 1	-197	16	4901	-12.77	0.85	0.02
317	SLE QP 2	-206	16	5087	-13.18	0.86	0.02
317	SLD 1	927	16	4439	-15.18	52.02	0.02
317	SLD 2	927	16	4439	-15.18	52.02	0.02
317	SLD 3	777	-5	4979	8.02	45.07	-0.01
317	SLD 4	777	-5	4979	8.02	45.07	-0.01
317	SLD 5	362	48	4073	-48.97	26.74	0.06
317	SLD 6	362	48	4073	-48.97	26.74	0.06
317	SLD 7	-139	-22	5874	28.36	3.6	-0.03
317	SLD 8	-139	-22	5874	28.36	3.6	-0.03
317	SLD 9	-273	54	4300	-54.73	-1.87	0.07
317	SLD 10	-273	54	4300	-54.73	-1.87	0.07
317	SLD 11	-773	-16	6101	22.6	-25.01	-0.02
317	SLD 12	-773	-16	6101	22.6	-25.01	-0.02
317	SLD 13	-1188	37	5195	-34.39	-43.35	0.05
317	SLD 14	-1188	37	5195	-34.39	-43.35	0.05
317	SLD 15	-1338	16	5735	-11.19	-50.29	0.02
317	SLD 16	-1338	16	5735	-11.19	-50.29	0.02
317	SLV 1	2379	18	3584	-19.1	117.73	0.03
317	SLV 2	2379	18	3584	-19.1	117.73	0.03
317	SLV 3	2015	-36	4856	40.36	100.75	-0.05
317	SLV 4	2015	-36	4856	40.36	100.75	-0.05
317	SLV 5	1121	99	2707	-105.14	61.67	0.13
317	SLV 6	1121	99	2707	-105.14	61.67	0.13
317	SLV 7	-91	-82	6947	93.06	5.08	-0.11
317	SLV 8	-91	-82	6947	93.06	5.08	-0.11
317	SLV 9	-321	114	3227	-119.43	-3.36	0.15
317	SLV 10	-321	114	3227	-119.43	-3.36	0.15
317	SLV 11	-1533	-67	7467	78.77	-59.94	-0.09
317	SLV 12	-1533	-67	7467	78.77	-59.94	-0.09
317	SLV 13	-2427	68	5318	-66.73	-99.02	0.09
317	SLV 14	-2427	68	5318	-66.73	-99.02	0.09
317	SLV 15	-2790	14	6590	-7.27	-116	0.01
317	SLV 16	-2790	14	6590	-7.27	-116	0.01
318	SLU 1	-408	13	4356	-11.02	-21.32	0.01
318	SLU 2	-408	13	4341	-11.29	-21.28	0.01
318	SLU 3	-441	14	4488	-11.44	-22.89	0.01
318	SLU 4	-442	14	4479	-11.6	-22.87	0.01
318	SLU 5	-439	14	4437	-11.59	-22.64	0.01
318	SLU 6	-472	14	4583	-11.73	-24.25	0.01
318	SLU 7	-472	14	4574	-11.89	-24.23	0.01
318	SLU 8	-468	14	4547	-11.61	-24.04	0.01
318	SLU 9	-469	14	4538	-11.77	-24.02	0.01
318	SLU 10	-474	15	4931	-12.49	-24.6	0.01
318	SLU 11	-507	15	5078	-12.64	-26.21	0.01
318	SLU 12	-507	15	5069	-12.8	-26.19	0.01
318	SLU 13	-504	15	5026	-12.79	-25.96	0.01
318	SLU 14	-537	15	5173	-12.94	-27.57	0.01
318	SLU 15	-538	16	5164	-13.1	-27.55	0.01
318	SLU 16	-534	15	5137	-12.82	-27.36	0.01
318	SLU 17	-534	15	5128	-12.98	-27.34	0.01
318	SLU 18	-501	15	5199	-12.74	-26.06	0.01
318	SLU 19	-502	15	5190	-12.9	-26.04	0.01
318	SLU 20	-532	16	5294	-13.04	-27.42	0.01
318	SLU 21	-532	16	5285	-13.2	-27.4	0.01
318	SLU 22	-480	15	4911	-12.28	-24.93	0.01
318	SLU 23	-481	15	4896	-12.55	-24.89	0.01
318	SLU 24	-514	15	5043	-12.7	-26.5	0.01
318	SLU 25	-514	15	5034	-12.86	-26.48	0.01
318	SLU 26	-511	15	4991	-12.85	-26.25	0.01
318	SLU 27	-544	15	5138	-12.99	-27.86	0.01
318	SLU 28	-545	16	5129	-13.16	-27.84	0.01
318	SLU 29	-540	15	5101	-12.87	-27.65	0.01
318	SLU 30	-541	15	5092	-13.04	-27.63	0.01
318	SLU 31	-546	16	5486	-13.75	-28.21	0.01
318	SLU 32	-579	17	5632	-13.9	-29.82	0.01
318	SLU 33	-580	17	5623	-14.06	-29.79	0.01
318	SLU 34	-577	17	5581	-14.05	-29.57	0.01
318	SLU 35	-610	17	5728	-14.2	-31.18	0.01
318	SLU 36	-610	17	5719	-14.36	-31.16	0.01
318	SLU 37	-606	17	5691	-14.08	-30.97	0.01
318	SLU 38	-607	17	5682	-14.24	-30.95	0.01
318	SLU 39	-574	17	5753	-14	-29.67	0.01
318	SLU 40	-574	17	5744	-14.16	-29.65	0.01
318	SLU 41	-604	17	5849	-14.3	-31.03	0.01
318	SLU 42	-604	17	5840	-14.46	-31.01	0.01
318	SLU 43	-505	16	5473	-13.89	-26.48	0.01
318	SLU 44	-506	17	5458	-14.16	-26.44	0.01
318	SLU 45	-539	17	5605	-14.31	-28.05	0.01
318	SLU 46	-539	17	5596	-14.47	-28.03	0.01
318	SLU 47	-536	17	5553	-14.46	-27.8	0.01
318	SLU 48	-569	17	5700	-14.61	-29.41	0.01
318	SLU 49	-570	17	5691	-14.77	-29.39	0.01
318	SLU 50	-566	17	5664	-14.48	-29.2	0.01
318	SLU 51	-566	17	5655	-14.65	-29.18	0.01
318	SLU 52	-571	18	6048	-15.37	-29.76	0.01
318	SLU 53	-604	18	6195	-15.51	-31.37	0.01

Nodo	Cont.	Reazione a traslazione			Reazione a rotazione		
Ind.	N.br.	x	y	z	x	y	z
318	SLU 54	-605	19	6186	-15.67	-31.35	0.01
318	SLU 55	-602	18	6143	-15.66	-31.12	0.01
318	SLU 56	-635	19	6290	-15.81	-32.73	0.01
318	SLU 57	-635	19	6281	-15.97	-32.71	0.01
318	SLU 58	-631	19	6253	-15.69	-32.52	0.01
318	SLU 59	-632	19	6244	-15.85	-32.5	0.01
318	SLU 60	-599	19	6316	-15.61	-31.22	0.01
318	SLU 61	-599	19	6307	-15.77	-31.2	0.01
318	SLU 62	-629	19	6411	-15.91	-32.58	0.01
318	SLU 63	-629	19	6402	-16.07	-32.56	0.01
318	SLU 64	-577	18	6028	-15.15	-30.09	0.01
318	SLU 65	-578	18	6013	-15.42	-30.05	0.01
318	SLU 66	-611	19	6159	-15.57	-31.66	0.01
318	SLU 67	-612	19	6150	-15.73	-31.64	0.01
318	SLU 68	-608	19	6108	-15.72	-31.41	0.01
318	SLU 69	-642	19	6255	-15.87	-33.02	0.01
318	SLU 70	-642	19	6246	-16.03	-33	0.01
318	SLU 71	-638	19	6218	-15.75	-32.81	0.01
318	SLU 72	-638	19	6209	-15.91	-32.79	0.01
318	SLU 73	-644	20	6602	-16.63	-33.37	0.01
318	SLU 74	-677	20	6749	-16.77	-34.98	0.01
318	SLU 75	-677	20	6740	-16.94	-34.95	0.01
318	SLU 76	-674	20	6698	-16.92	-34.73	0.01
318	SLU 77	-707	20	6844	-17.07	-36.34	0.01
318	SLU 78	-708	20	6835	-17.23	-36.31	0.01
318	SLU 79	-704	20	6808	-16.95	-36.13	0.01
318	SLU 80	-704	20	6799	-17.11	-36.11	0.01
318	SLU 81	-671	20	6870	-16.87	-34.83	0.01
318	SLU 82	-672	20	6861	-17.04	-34.81	0.01
318	SLU 83	-701	20	6965	-17.17	-36.19	0.01
318	SLU 84	-702	21	6956	-17.33	-36.17	0.01
318	SLE RA 1	-428	14	4515	-11.38	-22.35	0.01
318	SLE RA 2	-429	14	4505	-11.56	-22.33	0.01
318	SLE RA 3	-451	14	4603	-11.66	-23.4	0.01
318	SLE RA 4	-451	14	4597	-11.76	-23.38	0.01
318	SLE RA 5	-449	14	4568	-11.76	-23.23	0.01
318	SLE RA 6	-471	14	4666	-11.85	-24.31	0.01
318	SLE RA 7	-471	14	4660	-11.96	-24.29	0.01
318	SLE RA 8	-469	14	4642	-11.77	-24.17	0.01
318	SLE RA 9	-469	14	4636	-11.88	-24.15	0.01
318	SLE RA 10	-472	15	4898	-12.36	-24.54	0.01
318	SLE RA 11	-495	15	4996	-12.46	-25.61	0.01
318	SLE RA 12	-495	15	4990	-12.57	-25.6	0.01
318	SLE RA 13	-493	15	4961	-12.56	-25.45	0.01
318	SLE RA 14	-515	15	5059	-12.66	-26.52	0.01
318	SLE RA 15	-515	15	5053	-12.77	-26.5	0.01
318	SLE RA 16	-512	15	5035	-12.58	-26.38	0.01
318	SLE RA 17	-513	15	5029	-12.69	-26.36	0.01
318	SLE RA 18	-491	15	5076	-12.53	-25.51	0.01
318	SLE RA 19	-491	15	5070	-12.63	-25.5	0.01
318	SLE RA 20	-511	15	5140	-12.72	-26.42	0.01
318	SLE RA 21	-511	15	5134	-12.83	-26.4	0.01
318	SLE FR 1	-428	14	4515	-11.38	-22.35	0.01
318	SLE FR 2	-428	14	4513	-11.41	-22.35	0.01
318	SLE FR 3	-436	14	4540	-11.46	-22.72	0.01
318	SLE FR 4	-447	14	4681	-11.76	-23.3	0.01
318	SLE FR 5	-455	14	4709	-11.8	-23.66	0.01
318	SLE FR 6	-459	14	4796	-11.95	-23.93	0.01
318	SLE QP 1	-428	14	4515	-11.38	-22.35	0.01
318	SLE QP 2	-447	14	4683	-11.72	-23.3	0.01
318	SLD 1	793	16	3908	-15.03	29.03	0.01
318	SLD 2	793	16	3908	-15.03	29.03	0.01
318	SLD 3	623	-9	4425	11.63	21.57	-0.01
318	SLD 4	623	-9	4425	11.63	21.57	-0.01
318	SLD 5	184	52	3668	-53.16	3.71	0.03
318	SLD 6	184	52	3668	-53.16	3.71	0.03
318	SLD 7	-385	-30	5389	35.73	-21.15	-0.02
318	SLD 8	-385	-30	5389	35.73	-21.15	-0.02
318	SLD 9	-509	58	3978	-59.17	-25.45	0.04
318	SLD 10	-509	58	3978	-59.17	-25.45	0.04
318	SLD 11	-1077	-24	5699	29.71	-50.31	-0.02
318	SLD 12	-1077	-24	5699	29.71	-50.31	-0.02
318	SLD 13	-1516	36	4942	-35.08	-68.17	0.03
318	SLD 14	-1516	36	4942	-35.08	-68.17	0.03
318	SLD 15	-1687	12	5458	-8.41	-75.63	0.01
318	SLD 16	-1687	12	5458	-8.41	-75.63	0.01
318	SLV 1	2380	21	2897	-20.82	95.96	0.01
318	SLV 2	2380	21	2897	-20.82	95.96	0.01
318	SLV 3	1972	-43	4114	47.54	78.21	-0.04
318	SLV 4	1972	-43	4114	47.54	78.21	-0.04
318	SLV 5	1020	112	2302	-118.14	39.39	0.07
318	SLV 6	1020	112	2302	-118.14	39.39	0.07
318	SLV 7	-340	-99	6358	109.75	-19.76	-0.07
318	SLV 8	-340	-99	6358	109.75	-19.76	-0.07
318	SLV 9	-554	127	3009	-133.19	-26.84	0.09
318	SLV 10	-554	127	3009	-133.19	-26.84	0.09
318	SLV 11	-1914	-84	7065	94.7	-85.99	-0.06
318	SLV 12	-1914	-84	7065	94.7	-85.99	-0.06
318	SLV 13	-2866	71	5253	-70.99	-124.81	0.05
318	SLV 14	-2866	71	5253	-70.99	-124.81	0.05
318	SLV 15	-3274	7	6469	-2.62	-142.56	0.01

Nodo	Cont.	Reazione a traslazione			Reazione a rotazione		
Ind.	N.br.	x	y	z	x	y	z
318	SLV 16	-3274	7	6469	-2.62	-142.56	0.01
319	SLU 1	-308	11	4033	-9.53	-7.37	0
319	SLU 2	-311	11	4010	-9.87	-7.5	0
319	SLU 3	-339	11	4156	-9.89	-8.54	0
319	SLU 4	-341	12	4142	-10.1	-8.62	0
319	SLU 5	-341	12	4101	-10.13	-8.67	0
319	SLU 6	-369	12	4247	-10.15	-9.72	0
319	SLU 7	-371	12	4233	-10.36	-9.79	0
319	SLU 8	-367	12	4215	-10.05	-9.72	0
319	SLU 9	-369	12	4201	-10.26	-9.79	0
319	SLU 10	-366	12	4543	-10.84	-8.94	0
319	SLU 11	-394	13	4689	-10.86	-9.98	0
319	SLU 12	-396	13	4675	-11.06	-10.06	0
319	SLU 13	-395	13	4634	-11.1	-10.11	0
319	SLU 14	-424	13	4780	-11.12	-11.16	0
319	SLU 15	-426	13	4766	-11.32	-11.23	0
319	SLU 16	-422	13	4747	-11.02	-11.16	0
319	SLU 17	-424	13	4734	-11.22	-11.24	0
319	SLU 18	-386	13	4794	-10.91	-9.43	0
319	SLU 19	-388	13	4780	-11.12	-9.51	0
319	SLU 20	-416	13	4885	-11.17	-10.61	0
319	SLU 21	-418	13	4871	-11.37	-10.68	0
319	SLU 22	-369	12	4534	-10.56	-9.11	0
319	SLU 23	-372	12	4511	-10.9	-9.24	0
319	SLU 24	-400	13	4657	-10.92	-10.28	0
319	SLU 25	-402	13	4643	-11.13	-10.36	0
319	SLU 26	-402	13	4602	-11.16	-10.41	0
319	SLU 27	-430	13	4748	-11.18	-11.46	0
319	SLU 28	-432	13	4734	-11.39	-11.53	0
319	SLU 29	-428	13	4716	-11.08	-11.46	0
319	SLU 30	-430	13	4702	-11.29	-11.54	0
319	SLU 31	-427	14	5044	-11.87	-10.68	0
319	SLU 32	-455	14	5190	-11.89	-11.73	0
319	SLU 33	-457	14	5176	-12.09	-11.8	0
319	SLU 34	-456	14	5135	-12.13	-11.86	0
319	SLU 35	-484	14	5281	-12.15	-12.9	0
319	SLU 36	-486	14	5267	-12.35	-12.98	0
319	SLU 37	-482	14	5249	-12.05	-12.9	0
319	SLU 38	-484	14	5235	-12.25	-12.98	0
319	SLU 39	-447	14	5295	-11.94	-11.18	0
319	SLU 40	-449	14	5282	-12.15	-11.25	0
319	SLU 41	-476	14	5386	-12.2	-12.35	0
319	SLU 42	-478	14	5372	-12.41	-12.43	0
319	SLU 43	-380	14	5071	-12.04	-8.98	0
319	SLU 44	-383	14	5048	-12.38	-9.11	0
319	SLU 45	-411	14	5194	-12.4	-10.16	0
319	SLU 46	-413	14	5180	-12.6	-10.23	0
319	SLU 47	-412	14	5139	-12.64	-10.29	0
319	SLU 48	-441	15	5285	-12.66	-11.33	0
319	SLU 49	-443	15	5271	-12.86	-11.41	0
319	SLU 50	-439	15	5253	-12.56	-11.33	0
319	SLU 51	-441	15	5239	-12.76	-11.41	0
319	SLU 52	-438	15	5581	-13.34	-10.55	0
319	SLU 53	-466	15	5727	-13.36	-11.6	0
319	SLU 54	-468	16	5713	-13.57	-11.67	0
319	SLU 55	-467	16	5672	-13.6	-11.73	0
319	SLU 56	-495	16	5818	-13.62	-12.77	0
319	SLU 57	-497	16	5804	-13.83	-12.85	0
319	SLU 58	-493	16	5786	-13.52	-12.78	0
319	SLU 59	-495	16	5772	-13.73	-12.85	0
319	SLU 60	-458	16	5832	-13.42	-11.05	0
319	SLU 61	-460	16	5818	-13.62	-11.12	0
319	SLU 62	-487	16	5923	-13.68	-12.22	0
319	SLU 63	-489	16	5909	-13.88	-12.3	0
319	SLU 64	-440	15	5573	-13.07	-10.73	0
319	SLU 65	-444	15	5549	-13.41	-10.85	0
319	SLU 66	-472	16	5695	-13.43	-11.9	0
319	SLU 67	-474	16	5682	-13.63	-11.97	0
319	SLU 68	-473	16	5640	-13.67	-12.03	0
319	SLU 69	-501	16	5786	-13.69	-13.07	0
319	SLU 70	-503	16	5772	-13.89	-13.15	0
319	SLU 71	-499	16	5754	-13.59	-13.08	0
319	SLU 72	-501	16	5740	-13.79	-13.15	0
319	SLU 73	-498	16	6082	-14.37	-12.3	0
319	SLU 74	-526	17	6228	-14.39	-13.34	0
319	SLU 75	-528	17	6214	-14.6	-13.42	0
319	SLU 76	-528	17	6173	-14.63	-13.47	0
319	SLU 77	-556	17	6319	-14.65	-14.52	0
319	SLU 78	-558	17	6305	-14.86	-14.59	0
319	SLU 79	-554	17	6287	-14.55	-14.52	0
319	SLU 80	-556	17	6273	-14.76	-14.59	0
319	SLU 81	-518	17	6334	-14.45	-12.79	0
319	SLU 82	-520	17	6320	-14.65	-12.86	0
319	SLU 83	-548	17	6424	-14.71	-13.96	0
319	SLU 84	-550	17	6410	-14.91	-14.04	0
319	SLE RA 1	-325	11	4176	-9.83	-7.87	0
319	SLE RA 2	-328	12	4161	-10.05	-7.95	0
319	SLE RA 3	-346	12	4258	-10.07	-8.65	0
319	SLE RA 4	-348	12	4249	-10.2	-8.7	0
319	SLE RA 5	-347	12	4222	-10.23	-8.74	0
319	SLE RA 6	-366	12	4319	-10.24	-9.43	0

Nodo	Cont.	Reazione a traslazione			Reazione a rotazione		
Ind.	N.br.	x	y	z	x	y	z
319	SLE RA 7	-367	12	4310	-10.38	-9.48	0
319	SLE RA 8	-365	12	4297	-10.17	-9.43	0
319	SLE RA 9	-366	12	4288	-10.31	-9.48	0
319	SLE RA 10	-364	12	4516	-10.7	-8.92	0
319	SLE RA 11	-383	12	4613	-10.71	-9.61	0
319	SLE RA 12	-384	12	4604	-10.85	-9.66	0
319	SLE RA 13	-384	12	4577	-10.87	-9.7	0
319	SLE RA 14	-402	13	4674	-10.88	-10.39	0
319	SLE RA 15	-404	13	4665	-11.02	-10.44	0
319	SLE RA 16	-401	13	4653	-10.82	-10.4	0
319	SLE RA 17	-402	13	4643	-10.95	-10.45	0
319	SLE RA 18	-377	12	4684	-10.74	-9.24	0
319	SLE RA 19	-379	13	4675	-10.88	-9.29	0
319	SLE RA 20	-397	13	4744	-10.92	-10.03	0
319	SLE RA 21	-398	13	4735	-11.05	-10.08	0
319	SLE FR 1	-325	11	4176	-9.83	-7.87	0
319	SLE FR 2	-326	11	4173	-9.87	-7.89	0
319	SLE FR 3	-333	11	4201	-9.89	-8.18	0
319	SLE FR 4	-341	12	4326	-10.15	-8.3	0
319	SLE FR 5	-349	12	4353	-10.17	-8.59	0
319	SLE FR 6	-351	12	4430	-10.28	-8.56	0
319	SLE QP 1	-325	11	4176	-9.83	-7.87	0
319	SLE QP 2	-341	12	4329	-10.1	-8.28	0
319	SLD 1	995	15	3510	-14.29	49.81	-0.01
319	SLD 2	995	15	3510	-14.29	49.81	-0.01
319	SLD 3	811	-11	4027	13.53	42.05	0
319	SLD 4	811	-11	4027	13.53	42.05	0
319	SLD 5	339	52	3298	-53.55	20.92	-0.01
319	SLD 6	339	52	3298	-53.55	20.92	-0.01
319	SLD 7	-275	-35	5023	39.18	-4.96	0
319	SLD 8	-275	-35	5023	39.18	-4.96	0
319	SLD 9	-407	58	3634	-59.38	-11.6	0
319	SLD 10	-407	58	3634	-59.38	-11.6	0
319	SLD 11	-1021	-29	5359	33.34	-37.49	0
319	SLD 12	-1021	-29	5359	33.34	-37.49	0
319	SLD 13	-1493	34	4630	-33.73	-58.61	0
319	SLD 14	-1493	34	4630	-33.73	-58.61	0
319	SLD 15	-1677	8	5147	-5.91	-66.37	0.01
319	SLD 16	-1677	8	5147	-5.91	-66.37	0.01
319	SLV 1	2706	21	2444	-21.25	124.3	-0.02
319	SLV 2	2706	21	2444	-21.25	124.3	-0.02
319	SLV 3	2263	-45	3662	50.08	105.49	-0.01
319	SLV 4	2263	-45	3662	50.08	105.49	-0.01
319	SLV 5	1244	116	1916	-121.63	60.02	-0.02
319	SLV 6	1244	116	1916	-121.63	60.02	-0.02
319	SLV 7	-231	-107	5976	116.14	-2.68	0.01
319	SLV 8	-231	-107	5976	116.14	-2.68	0.01
319	SLV 9	-451	130	2681	-136.34	-13.88	-0.01
319	SLV 10	-451	130	2681	-136.34	-13.88	-0.01
319	SLV 11	-1926	-92	6741	101.43	-76.59	0.01
319	SLV 12	-1926	-92	6741	101.43	-76.59	0.01
319	SLV 13	-2946	69	4995	-70.28	-122.05	0.01
319	SLV 14	-2946	69	4995	-70.28	-122.05	0.01
319	SLV 15	-3388	2	6213	1.05	-140.86	0.01
319	SLV 16	-3388	2	6213	1.05	-140.86	0.01
320	SLU 1	-335	9	3898	-8.02	-17.67	-0.01
320	SLU 2	-340	10	3864	-8.42	-17.81	-0.01
320	SLU 3	-366	10	4017	-8.33	-19.11	-0.01
320	SLU 4	-369	10	3997	-8.57	-19.2	-0.01
320	SLU 5	-369	10	3954	-8.65	-19.12	-0.01
320	SLU 6	-395	10	4108	-8.56	-20.42	-0.01
320	SLU 7	-398	10	4088	-8.8	-20.51	-0.01
320	SLU 8	-392	10	4078	-8.47	-20.28	-0.01
320	SLU 9	-396	10	4058	-8.71	-20.37	-0.01
320	SLU 10	-401	11	4366	-9.18	-20.84	-0.01
320	SLU 11	-427	11	4519	-9.09	-22.14	-0.01
320	SLU 12	-430	11	4499	-9.33	-22.23	-0.01
320	SLU 13	-430	11	4456	-9.4	-22.15	-0.01
320	SLU 14	-456	11	4610	-9.31	-23.45	-0.01
320	SLU 15	-459	11	4589	-9.55	-23.54	-0.01
320	SLU 16	-453	11	4580	-9.23	-23.31	-0.01
320	SLU 17	-457	11	4560	-9.47	-23.4	-0.01
320	SLU 18	-422	11	4615	-9.1	-21.99	-0.01
320	SLU 19	-425	11	4594	-9.34	-22.08	-0.01
320	SLU 20	-451	11	4705	-9.33	-23.3	-0.01
320	SLU 21	-454	11	4685	-9.57	-23.39	-0.01
320	SLU 22	-401	10	4371	-8.85	-20.91	-0.01
320	SLU 23	-406	11	4337	-9.25	-21.05	-0.01
320	SLU 24	-432	11	4491	-9.16	-22.35	-0.01
320	SLU 25	-435	11	4471	-9.4	-22.44	-0.01
320	SLU 26	-435	11	4428	-9.47	-22.36	-0.01
320	SLU 27	-460	11	4581	-9.38	-23.66	-0.01
320	SLU 28	-464	11	4561	-9.62	-23.75	-0.01
320	SLU 29	-458	11	4552	-9.3	-23.52	-0.01
320	SLU 30	-461	11	4531	-9.54	-23.61	-0.01
320	SLU 31	-467	12	4839	-10	-24.08	-0.01
320	SLU 32	-493	12	4993	-9.91	-25.38	-0.01
320	SLU 33	-496	12	4973	-10.15	-25.47	-0.01
320	SLU 34	-496	12	4930	-10.23	-25.39	-0.01
320	SLU 35	-521	12	5083	-10.14	-26.69	-0.01
320	SLU 36	-525	12	5063	-10.38	-26.78	-0.01

Nodo	Cont.	Reazione a traslazione			Reazione a rotazione		
Ind.	N.br.	x	y	z	x	y	z
320	SLU 37	-519	12	5054	-10.05	-26.55	-0.01
320	SLU 38	-522	12	5033	-10.29	-26.64	-0.01
320	SLU 39	-488	12	5088	-9.93	-25.23	-0.01
320	SLU 40	-491	12	5068	-10.17	-25.32	-0.01
320	SLU 41	-516	12	5179	-10.15	-26.54	-0.01
320	SLU 42	-520	12	5158	-10.39	-26.63	-0.01
320	SLU 43	-413	12	4905	-10.15	-21.86	-0.01
320	SLU 44	-418	12	4871	-10.55	-22	-0.01
320	SLU 45	-444	12	5024	-10.46	-23.3	-0.01
320	SLU 46	-447	12	5004	-10.7	-23.39	-0.01
320	SLU 47	-447	12	4961	-10.77	-23.31	-0.01
320	SLU 48	-473	13	5115	-10.68	-24.61	-0.01
320	SLU 49	-476	13	5094	-10.92	-24.7	-0.01
320	SLU 50	-470	12	5085	-10.6	-24.47	-0.01
320	SLU 51	-474	13	5065	-10.84	-24.56	-0.01
320	SLU 52	-479	13	5373	-11.3	-25.03	-0.01
320	SLU 53	-505	13	5526	-11.21	-26.33	-0.01
320	SLU 54	-508	13	5506	-11.45	-26.42	-0.01
320	SLU 55	-508	13	5463	-11.53	-26.34	-0.01
320	SLU 56	-534	13	5617	-11.44	-27.64	-0.01
320	SLU 57	-537	14	5596	-11.68	-27.73	-0.01
320	SLU 58	-531	13	5587	-11.35	-27.5	-0.01
320	SLU 59	-535	14	5567	-11.59	-27.59	-0.01
320	SLU 60	-500	13	5622	-11.23	-26.18	-0.01
320	SLU 61	-503	13	5601	-11.47	-26.27	-0.01
320	SLU 62	-529	13	5712	-11.45	-27.49	-0.01
320	SLU 63	-532	14	5692	-11.69	-27.58	-0.01
320	SLU 64	-479	13	5378	-10.97	-25.1	-0.01
320	SLU 65	-484	13	5344	-11.37	-25.24	-0.01
320	SLU 66	-510	13	5498	-11.28	-26.54	-0.01
320	SLU 67	-513	13	5478	-11.52	-26.63	-0.01
320	SLU 68	-513	13	5435	-11.6	-26.55	-0.01
320	SLU 69	-538	14	5588	-11.51	-27.85	-0.01
320	SLU 70	-542	14	5568	-11.75	-27.94	-0.01
320	SLU 71	-536	13	5559	-11.42	-27.71	-0.01
320	SLU 72	-539	14	5538	-11.66	-27.8	-0.01
320	SLU 73	-545	14	5846	-12.13	-28.27	-0.01
320	SLU 74	-571	14	6000	-12.04	-29.57	-0.01
320	SLU 75	-574	14	5980	-12.28	-29.66	-0.01
320	SLU 76	-574	14	5937	-12.35	-29.58	-0.01
320	SLU 77	-599	14	6090	-12.26	-30.88	-0.01
320	SLU 78	-603	15	6070	-12.5	-30.97	-0.01
320	SLU 79	-597	14	6061	-12.18	-30.74	-0.01
320	SLU 80	-600	15	6040	-12.42	-30.83	-0.01
320	SLU 81	-566	14	6095	-12.05	-29.42	-0.01
320	SLU 82	-569	14	6075	-12.29	-29.51	-0.01
320	SLU 83	-594	14	6185	-12.28	-30.73	-0.01
320	SLU 84	-598	15	6165	-12.52	-30.82	-0.01
320	SLE RA 1	-354	10	4033	-8.26	-18.59	-0.01
320	SLE RA 2	-357	10	4010	-8.53	-18.69	-0.01
320	SLE RA 3	-374	10	4113	-8.47	-19.56	-0.01
320	SLE RA 4	-377	10	4099	-8.63	-19.61	-0.01
320	SLE RA 5	-377	10	4071	-8.68	-19.56	-0.01
320	SLE RA 6	-394	10	4173	-8.61	-20.43	-0.01
320	SLE RA 7	-396	10	4159	-8.77	-20.49	-0.01
320	SLE RA 8	-392	10	4153	-8.56	-20.34	-0.01
320	SLE RA 9	-394	10	4140	-8.72	-20.39	-0.01
320	SLE RA 10	-398	10	4345	-9.03	-20.71	-0.01
320	SLE RA 11	-415	11	4447	-8.97	-21.58	-0.01
320	SLE RA 12	-417	11	4434	-9.13	-21.63	-0.01
320	SLE RA 13	-417	11	4405	-9.18	-21.58	-0.01
320	SLE RA 14	-434	11	4508	-9.12	-22.45	-0.01
320	SLE RA 15	-436	11	4494	-9.28	-22.51	-0.01
320	SLE RA 16	-433	11	4488	-9.06	-22.36	-0.01
320	SLE RA 17	-435	11	4474	-9.22	-22.41	-0.01
320	SLE RA 18	-412	11	4511	-8.98	-21.48	-0.01
320	SLE RA 19	-414	11	4497	-9.14	-21.54	-0.01
320	SLE RA 20	-431	11	4571	-9.13	-22.35	-0.01
320	SLE RA 21	-433	11	4558	-9.29	-22.41	-0.01
320	SLE FR 1	-354	10	4033	-8.26	-18.59	-0.01
320	SLE FR 2	-354	10	4028	-8.31	-18.61	-0.01
320	SLE FR 3	-361	10	4057	-8.32	-18.94	-0.01
320	SLE FR 4	-372	10	4172	-8.53	-19.48	-0.01
320	SLE FR 5	-379	10	4200	-8.54	-19.81	-0.01
320	SLE FR 6	-383	10	4272	-8.62	-20.04	-0.01
320	SLE QP 1	-354	10	4033	-8.26	-18.59	-0.01
320	SLE QP 2	-371	10	4176	-8.48	-19.46	-0.01
320	SLD 1	947	14	3327	-12.85	36.66	-0.01
320	SLD 2	947	14	3327	-12.85	36.66	-0.01
320	SLD 3	750	-10	3875	13.55	28.24	0.01
320	SLD 4	750	-10	3875	13.55	28.24	0.01
320	SLD 5	322	48	3090	-49.83	10.15	-0.05
320	SLD 6	322	48	3090	-49.83	10.15	-0.05
320	SLD 7	-332	-33	4918	38.17	-17.92	0.04
320	SLD 8	-332	-33	4918	38.17	-17.92	0.04
320	SLD 9	-410	53	3435	-55.12	-21	-0.05
320	SLD 10	-410	53	3435	-55.12	-21	-0.05
320	SLD 11	-1064	-28	5263	32.87	-49.06	0.03
320	SLD 12	-1064	-28	5263	32.87	-49.06	0.03
320	SLD 13	-1493	30	4477	-30.5	-67.16	-0.03
320	SLD 14	-1493	30	4477	-30.5	-67.16	-0.03

Nodo	Cont.	Reazione a traslazione			Reazione a rotazione		
Ind.	N.br.	x	y	z	x	y	z
320	SLD 15	-1689	6	5025	-4.1	-75.58	-0.01
320	SLD 16	-1689	6	5025	-4.1	-75.58	-0.01
320	SLV 1	2634	20	2222	-19.92	108.47	-0.02
320	SLV 2	2634	20	2222	-19.92	108.47	-0.02
320	SLV 3	2166	-42	3508	47.78	88.45	0.05
320	SLV 4	2166	-42	3508	47.78	88.45	0.05
320	SLV 5	1240	107	1639	-114.59	49.29	-0.11
320	SLV 6	1240	107	1639	-114.59	49.29	-0.11
320	SLV 7	-319	-100	5926	111.09	-17.46	0.11
320	SLV 8	-319	-100	5926	111.09	-17.46	0.11
320	SLV 9	-423	120	2426	-128.04	-21.46	-0.12
320	SLV 10	-423	120	2426	-128.04	-21.46	-0.12
320	SLV 11	-1982	-87	6713	97.64	-88.21	0.09
320	SLV 12	-1982	-87	6713	97.64	-88.21	0.09
320	SLV 13	-2908	62	4845	-64.74	-127.36	-0.06
320	SLV 14	-2908	62	4845	-64.74	-127.36	-0.06
320	SLV 15	-3376	0	6131	2.97	-147.39	0
320	SLV 16	-3376	0	6131	2.97	-147.39	0
321	SLU 1	-246	8	3916	-6.4	-8.44	-0.01
321	SLU 2	-255	8	3868	-6.84	-8.77	-0.01
321	SLU 3	-272	8	4040	-6.65	-9.51	-0.01
321	SLU 4	-277	8	4012	-6.91	-9.7	-0.01
321	SLU 5	-280	9	3964	-7.02	-9.83	-0.01
321	SLU 6	-297	8	4136	-6.83	-10.57	-0.01
321	SLU 7	-302	9	4107	-7.1	-10.76	-0.01
321	SLU 8	-296	8	4107	-6.76	-10.57	-0.01
321	SLU 9	-301	9	4079	-7.03	-10.76	-0.01
321	SLU 10	-306	9	4361	-7.4	-10.58	-0.01
321	SLU 11	-323	9	4533	-7.21	-11.31	-0.01
321	SLU 12	-328	9	4504	-7.47	-11.51	-0.01
321	SLU 13	-331	9	4457	-7.58	-11.64	-0.01
321	SLU 14	-348	9	4629	-7.39	-12.38	-0.01
321	SLU 15	-353	9	4600	-7.66	-12.57	-0.01
321	SLU 16	-347	9	4600	-7.33	-12.37	-0.01
321	SLU 17	-352	9	4571	-7.59	-12.57	-0.01
321	SLU 18	-318	9	4620	-7.2	-11.02	-0.01
321	SLU 19	-324	9	4591	-7.47	-11.22	-0.01
321	SLU 20	-343	9	4716	-7.39	-12.09	-0.01
321	SLU 21	-349	9	4687	-7.65	-12.28	-0.01
321	SLU 22	-300	9	4384	-7.03	-10.4	-0.01
321	SLU 23	-309	9	4336	-7.47	-10.72	-0.01
321	SLU 24	-326	9	4508	-7.28	-11.46	-0.01
321	SLU 25	-331	9	4479	-7.54	-11.66	-0.01
321	SLU 26	-334	9	4431	-7.65	-11.79	-0.01
321	SLU 27	-350	9	4603	-7.46	-12.52	-0.01
321	SLU 28	-356	10	4575	-7.73	-12.72	-0.01
321	SLU 29	-350	9	4575	-7.39	-12.52	-0.01
321	SLU 30	-355	9	4546	-7.66	-12.72	-0.01
321	SLU 31	-359	10	4829	-8.03	-12.53	-0.01
321	SLU 32	-376	10	5001	-7.84	-13.27	-0.01
321	SLU 33	-382	10	4972	-8.1	-13.46	-0.01
321	SLU 34	-384	10	4924	-8.21	-13.59	-0.01
321	SLU 35	-401	10	5096	-8.02	-14.33	-0.01
321	SLU 36	-406	10	5068	-8.29	-14.53	-0.01
321	SLU 37	-400	10	5068	-7.96	-14.33	-0.01
321	SLU 38	-406	10	5039	-8.22	-14.53	-0.01
321	SLU 39	-372	10	5088	-7.83	-12.98	-0.01
321	SLU 40	-377	10	5059	-8.1	-13.17	-0.01
321	SLU 41	-397	10	5183	-8.02	-14.04	-0.01
321	SLU 42	-402	10	5155	-8.28	-14.24	-0.01
321	SLU 43	-302	10	4930	-8.1	-10.3	-0.01
321	SLU 44	-311	10	4883	-8.54	-10.63	-0.01
321	SLU 45	-327	10	5055	-8.35	-11.37	-0.01
321	SLU 46	-333	11	5026	-8.61	-11.56	-0.01
321	SLU 47	-336	11	4978	-8.72	-11.69	-0.01
321	SLU 48	-352	11	5150	-8.53	-12.43	-0.01
321	SLU 49	-358	11	5122	-8.8	-12.63	-0.01
321	SLU 50	-352	10	5122	-8.47	-12.43	-0.01
321	SLU 51	-357	11	5093	-8.73	-12.63	-0.01
321	SLU 52	-361	11	5376	-9.1	-12.44	-0.01
321	SLU 53	-378	11	5548	-8.91	-13.17	-0.01
321	SLU 54	-383	11	5519	-9.18	-13.37	-0.01
321	SLU 55	-386	11	5471	-9.29	-13.5	-0.01
321	SLU 56	-403	11	5643	-9.1	-14.24	-0.01
321	SLU 57	-408	12	5614	-9.36	-14.43	-0.01
321	SLU 58	-402	11	5615	-9.03	-14.24	-0.01
321	SLU 59	-408	11	5586	-9.3	-14.43	-0.01
321	SLU 60	-374	11	5635	-8.9	-12.89	-0.01
321	SLU 61	-379	11	5606	-9.17	-13.08	-0.01
321	SLU 62	-399	11	5730	-9.09	-13.95	-0.01
321	SLU 63	-404	12	5701	-9.35	-14.14	-0.01
321	SLU 64	-355	11	5398	-8.73	-12.26	-0.01
321	SLU 65	-364	11	5350	-9.17	-12.59	-0.01
321	SLU 66	-381	11	5522	-8.98	-13.32	-0.01
321	SLU 67	-386	11	5494	-9.24	-13.52	-0.01
321	SLU 68	-389	11	5446	-9.35	-13.65	-0.01
321	SLU 69	-406	11	5618	-9.16	-14.39	-0.01
321	SLU 70	-411	12	5589	-9.43	-14.58	-0.01
321	SLU 71	-405	11	5589	-9.1	-14.39	-0.01
321	SLU 72	-410	12	5561	-9.36	-14.58	-0.01
321	SLU 73	-415	12	5843	-9.73	-14.39	-0.01

Nodo	Cont.	Reazione a traslazione			Reazione a rotazione		
Ind.	N.br.	x	y	z	x	y	z
321	SLU 74	-432	12	6015	-9.54	-15.13	-0.01
321	SLU 75	-437	12	5986	-9.81	-15.33	-0.01
321	SLU 76	-440	12	5939	-9.92	-15.46	-0.01
321	SLU 77	-457	12	6111	-9.73	-16.19	-0.01
321	SLU 78	-462	12	6082	-9.99	-16.39	-0.01
321	SLU 79	-456	12	6082	-9.66	-16.19	-0.01
321	SLU 80	-461	12	6053	-9.93	-16.39	-0.01
321	SLU 81	-427	12	6102	-9.53	-14.84	-0.01
321	SLU 82	-433	12	6073	-9.8	-15.04	-0.01
321	SLU 83	-452	12	6198	-9.72	-15.9	-0.01
321	SLU 84	-458	12	6169	-9.98	-16.1	-0.01
321	SLE RA 1	-261	8	4050	-6.58	-9	-0.01
321	SLE RA 2	-267	8	4018	-6.87	-9.22	-0.01
321	SLE RA 3	-279	8	4132	-6.74	-9.71	-0.01
321	SLE RA 4	-282	9	4113	-6.92	-9.84	-0.01
321	SLE RA 5	-284	9	4081	-6.99	-9.93	-0.01
321	SLE RA 6	-295	9	4196	-6.87	-10.42	-0.01
321	SLE RA 7	-299	9	4177	-7.04	-10.55	-0.01
321	SLE RA 8	-295	8	4177	-6.82	-10.42	-0.01
321	SLE RA 9	-298	9	4158	-7	-10.55	-0.01
321	SLE RA 10	-301	9	4346	-7.25	-10.42	-0.01
321	SLE RA 11	-312	9	4461	-7.12	-10.91	-0.01
321	SLE RA 12	-316	9	4442	-7.3	-11.05	-0.01
321	SLE RA 13	-318	9	4410	-7.37	-11.13	-0.01
321	SLE RA 14	-329	9	4525	-7.24	-11.62	-0.01
321	SLE RA 15	-333	9	4506	-7.42	-11.75	-0.01
321	SLE RA 16	-328	9	4506	-7.2	-11.62	-0.01
321	SLE RA 17	-332	9	4486	-7.37	-11.75	-0.01
321	SLE RA 18	-310	9	4519	-7.11	-10.72	-0.01
321	SLE RA 19	-313	9	4500	-7.29	-10.85	-0.01
321	SLE RA 20	-326	9	4583	-7.24	-11.43	-0.01
321	SLE RA 21	-330	9	4564	-7.41	-11.56	-0.01
321	SLE FR 1	-261	8	4050	-6.58	-9	-0.01
321	SLE FR 2	-263	8	4043	-6.64	-9.04	-0.01
321	SLE FR 3	-268	8	4075	-6.63	-9.28	-0.01
321	SLE FR 4	-277	8	4184	-6.8	-9.56	-0.01
321	SLE FR 5	-283	8	4216	-6.79	-9.8	-0.01
321	SLE FR 6	-286	8	4284	-6.85	-9.86	-0.01
321	SLE QP 1	-261	8	4050	-6.58	-9	-0.01
321	SLE QP 2	-276	8	4190	-6.74	-9.52	-0.01
321	SLD 1	979	11	3210	-10.4	44.87	-0.01
321	SLD 2	979	11	3210	-10.4	44.87	-0.01
321	SLD 3	785	-9	3837	12.19	37.1	0.02
321	SLD 4	785	-9	3837	12.19	37.1	0.02
321	SLD 5	394	38	2946	-42.09	18.57	-0.06
321	SLD 6	394	38	2946	-42.09	18.57	-0.06
321	SLD 7	-251	-26	5035	33.19	-7.31	0.05
321	SLD 8	-251	-26	5035	33.19	-7.31	0.05
321	SLD 9	-301	43	3346	-46.67	-11.73	-0.07
321	SLD 10	-301	43	3346	-46.67	-11.73	-0.07
321	SLD 11	-945	-22	5435	28.61	-37.61	0.04
321	SLD 12	-945	-22	5435	28.61	-37.61	0.04
321	SLD 13	-1337	25	4544	-25.67	-56.14	-0.04
321	SLD 14	-1337	25	4544	-25.67	-56.14	-0.04
321	SLD 15	-1530	6	5170	-3.08	-63.9	-0.01
321	SLD 16	-1530	6	5170	-3.08	-63.9	-0.01
321	SLV 1	2585	15	1937	-16.25	114.54	-0.02
321	SLV 2	2585	15	1937	-16.25	114.54	-0.02
321	SLV 3	2125	-35	3402	41.67	95.93	0.07
321	SLV 4	2125	-35	3402	41.67	95.93	0.07
321	SLV 5	1281	86	1293	-97.45	55.92	-0.15
321	SLV 6	1281	86	1293	-97.45	55.92	-0.15
321	SLV 7	-254	-80	6175	95.64	-6.1	0.15
321	SLV 8	-254	-80	6175	95.64	-6.1	0.15
321	SLV 9	-298	97	2205	-109.12	-12.93	-0.17
321	SLV 10	-298	97	2205	-109.12	-12.93	-0.17
321	SLV 11	-1833	-69	7088	83.97	-74.95	0.13
321	SLV 12	-1833	-69	7088	83.97	-74.95	0.13
321	SLV 13	-2677	51	4979	-55.15	-114.97	-0.09
321	SLV 14	-2677	51	4979	-55.15	-114.97	-0.09
321	SLV 15	-3137	2	6443	2.78	-133.57	0
321	SLV 16	-3137	2	6443	2.78	-133.57	0
322	SLU 1	-332	5	4079	-4.38	-17.35	-0.01
322	SLU 2	-344	6	4012	-4.83	-17.71	-0.01
322	SLU 3	-358	6	4215	-4.55	-18.61	-0.01
322	SLU 4	-365	6	4175	-4.82	-18.83	-0.01
322	SLU 5	-368	6	4119	-4.96	-18.86	-0.01
322	SLU 6	-383	6	4323	-4.68	-19.77	-0.01
322	SLU 7	-390	6	4283	-4.95	-19.98	-0.01
322	SLU 8	-381	6	4294	-4.63	-19.67	-0.01
322	SLU 9	-388	6	4254	-4.91	-19.88	-0.01
322	SLU 10	-409	6	4515	-5.18	-20.85	-0.01
322	SLU 11	-423	6	4718	-4.9	-21.75	-0.01
322	SLU 12	-430	6	4678	-5.17	-21.97	-0.01
322	SLU 13	-433	7	4622	-5.31	-22	-0.01
322	SLU 14	-448	6	4826	-5.03	-22.91	-0.01
322	SLU 15	-455	7	4786	-5.3	-23.12	-0.01
322	SLU 16	-446	6	4797	-4.98	-22.8	-0.01
322	SLU 17	-453	7	4757	-5.26	-23.02	-0.01
322	SLU 18	-425	6	4797	-4.88	-21.84	-0.01
322	SLU 19	-432	6	4757	-5.15	-22.05	-0.01

Nodo	Cont.	Reazione a traslazione			Reazione a rotazione		
Ind.	N.br.	x	y	z	x	y	z
322	SLU 20	-449	6	4905	-5	-22.99	-0.01
322	SLU 21	-456	7	4865	-5.28	-23.21	-0.01
322	SLU 22	-397	6	4561	-4.78	-20.53	-0.01
322	SLU 23	-409	6	4494	-5.24	-20.88	-0.01
322	SLU 24	-423	6	4697	-4.96	-21.79	-0.01
322	SLU 25	-430	7	4657	-5.23	-22	-0.01
322	SLU 26	-433	7	4601	-5.37	-22.04	-0.01
322	SLU 27	-448	6	4805	-5.08	-22.94	-0.01
322	SLU 28	-455	7	4765	-5.36	-23.16	-0.01
322	SLU 29	-446	6	4776	-5.04	-22.84	-0.01
322	SLU 30	-453	7	4736	-5.31	-23.05	-0.01
322	SLU 31	-474	7	4997	-5.59	-24.02	-0.01
322	SLU 32	-488	7	5200	-5.31	-24.93	-0.01
322	SLU 33	-495	7	5160	-5.58	-25.14	-0.01
322	SLU 34	-498	7	5104	-5.72	-25.18	-0.01
322	SLU 35	-513	7	5308	-5.43	-26.08	-0.01
322	SLU 36	-520	7	5268	-5.71	-26.3	-0.01
322	SLU 37	-511	7	5279	-5.39	-25.98	-0.01
322	SLU 38	-518	7	5239	-5.66	-26.19	-0.01
322	SLU 39	-490	7	5279	-5.28	-25.01	-0.01
322	SLU 40	-497	7	5239	-5.56	-25.22	-0.01
322	SLU 41	-514	7	5387	-5.41	-26.17	-0.01
322	SLU 42	-521	7	5347	-5.68	-26.38	-0.01
322	SLU 43	-410	7	5137	-5.55	-21.47	-0.01
322	SLU 44	-421	7	5070	-6.01	-21.82	-0.01
322	SLU 45	-436	7	5273	-5.73	-22.73	-0.01
322	SLU 46	-443	7	5233	-6	-22.94	-0.01
322	SLU 47	-446	8	5178	-6.14	-22.98	-0.01
322	SLU 48	-460	7	5381	-5.85	-23.89	-0.01
322	SLU 49	-467	8	5341	-6.13	-24.1	-0.01
322	SLU 50	-458	7	5352	-5.81	-23.78	-0.01
322	SLU 51	-465	8	5312	-6.08	-24	-0.01
322	SLU 52	-486	8	5573	-6.36	-24.96	-0.01
322	SLU 53	-501	8	5776	-6.07	-25.87	-0.01
322	SLU 54	-508	8	5736	-6.35	-26.08	-0.01
322	SLU 55	-510	8	5681	-6.48	-26.12	-0.01
322	SLU 56	-525	8	5884	-6.2	-27.03	-0.01
322	SLU 57	-532	8	5844	-6.48	-27.24	-0.01
322	SLU 58	-523	8	5855	-6.16	-26.92	-0.01
322	SLU 59	-530	8	5815	-6.43	-27.14	-0.01
322	SLU 60	-502	8	5855	-6.05	-25.95	-0.01
322	SLU 61	-509	8	5815	-6.32	-26.17	-0.01
322	SLU 62	-527	8	5963	-6.18	-27.11	-0.01
322	SLU 63	-534	8	5923	-6.45	-27.32	-0.01
322	SLU 64	-475	7	5619	-5.96	-24.64	-0.01
322	SLU 65	-486	8	5552	-6.41	-25	-0.01
322	SLU 66	-501	8	5755	-6.13	-25.9	-0.01
322	SLU 67	-508	8	5715	-6.41	-26.12	-0.01
322	SLU 68	-511	8	5660	-6.54	-26.16	-0.01
322	SLU 69	-525	8	5863	-6.26	-27.06	-0.01
322	SLU 70	-532	8	5823	-6.53	-27.27	-0.01
322	SLU 71	-524	8	5834	-6.21	-26.96	-0.01
322	SLU 72	-530	8	5794	-6.49	-27.17	-0.01
322	SLU 73	-551	8	6055	-6.76	-28.14	-0.01
322	SLU 74	-566	8	6259	-6.48	-29.04	-0.01
322	SLU 75	-573	8	6218	-6.75	-29.26	-0.01
322	SLU 76	-576	9	6163	-6.89	-29.29	-0.01
322	SLU 77	-590	8	6366	-6.61	-30.2	-0.01
322	SLU 78	-597	9	6326	-6.88	-30.41	-0.01
322	SLU 79	-588	8	6337	-6.56	-30.1	-0.01
322	SLU 80	-595	9	6297	-6.84	-30.31	-0.01
322	SLU 81	-567	8	6338	-6.46	-29.13	-0.01
322	SLU 82	-574	8	6297	-6.73	-29.34	-0.01
322	SLU 83	-592	8	6445	-6.58	-30.28	-0.01
322	SLU 84	-599	9	6405	-6.86	-30.5	-0.01
322	SLE RA 1	-351	6	4216	-4.49	-18.26	-0.01
322	SLE RA 2	-359	6	4172	-4.8	-18.5	-0.01
322	SLE RA 3	-368	6	4307	-4.61	-19.1	-0.01
322	SLE RA 4	-373	6	4281	-4.79	-19.24	-0.01
322	SLE RA 5	-375	6	4243	-4.88	-19.27	-0.01
322	SLE RA 6	-385	6	4379	-4.69	-19.87	-0.01
322	SLE RA 7	-389	6	4352	-4.88	-20.01	-0.01
322	SLE RA 8	-383	6	4360	-4.66	-19.8	-0.01
322	SLE RA 9	-388	6	4333	-4.85	-19.94	-0.01
322	SLE RA 10	-402	6	4507	-5.03	-20.59	-0.01
322	SLE RA 11	-412	6	4643	-4.84	-21.19	-0.01
322	SLE RA 12	-416	6	4616	-5.02	-21.33	-0.01
322	SLE RA 13	-418	6	4579	-5.12	-21.36	-0.01
322	SLE RA 14	-428	6	4714	-4.93	-21.96	-0.01
322	SLE RA 15	-432	6	4688	-5.11	-22.11	-0.01
322	SLE RA 16	-427	6	4695	-4.9	-21.89	-0.01
322	SLE RA 17	-431	6	4668	-5.08	-22.04	-0.01
322	SLE RA 18	-413	6	4695	-4.83	-21.25	-0.01
322	SLE RA 19	-417	6	4669	-5.01	-21.39	-0.01
322	SLE RA 20	-429	6	4767	-4.91	-22.02	-0.01
322	SLE RA 21	-434	6	4740	-5.09	-22.16	-0.01
322	SLE FR 1	-351	6	4216	-4.49	-18.26	-0.01
322	SLE FR 2	-352	6	4207	-4.55	-18.31	-0.01
322	SLE FR 3	-357	6	4245	-4.53	-18.57	-0.01
322	SLE FR 4	-371	6	4351	-4.65	-19.2	-0.01
322	SLE FR 5	-376	6	4389	-4.63	-19.46	-0.01

Nodo	Cont.	Reazione a traslazione			Reazione a rotazione		
Ind.	N.br.	x	y	z	x	y	z
322	SLE FR 6	-382	6	4456	-4.66	-19.75	-0.01
322	SLE QP 1	-351	6	4216	-4.49	-18.26	-0.01
322	SLE QP 2	-369	6	4360	-4.59	-19.16	-0.01
322	SLD 1	594	4	3104	-6.66	23.21	-0.01
322	SLD 2	594	4	3104	-6.66	23.21	-0.01
322	SLD 3	790	-8	3848	10.4	31.39	0.02
322	SLD 4	790	-8	3848	10.4	31.39	0.02
322	SLD 5	-378	24	2855	-31.09	-18.85	-0.06
322	SLD 6	-378	24	2855	-31.09	-18.85	-0.06
322	SLD 7	276	-17	5334	25.78	8.42	0.05
322	SLD 8	276	-17	5334	25.78	8.42	0.05
322	SLD 9	-1015	29	3386	-34.97	-46.73	-0.07
322	SLD 10	-1015	29	3386	-34.97	-46.73	-0.07
322	SLD 11	-361	-13	5865	21.9	-19.46	0.04
322	SLD 12	-361	-13	5865	21.9	-19.46	0.04
322	SLD 13	-1529	20	4872	-19.59	-69.7	-0.04
322	SLD 14	-1529	20	4872	-19.59	-69.7	-0.04
322	SLD 15	-1332	7	5616	-2.53	-61.52	-0.01
322	SLD 16	-1332	7	5616	-2.53	-61.52	-0.01
322	SLV 1	1809	2	1480	-10.07	76.69	-0.01
322	SLV 2	1809	2	1480	-10.07	76.69	-0.01
322	SLV 3	2274	-30	3215	33.69	96.07	0.07
322	SLV 4	2274	-30	3215	33.69	96.07	0.07
322	SLV 5	-421	53	864	-72.61	-19.8	-0.13
322	SLV 6	-421	53	864	-72.61	-19.8	-0.13
322	SLV 7	1129	-53	6648	73.26	44.8	0.14
322	SLV 8	1129	-53	6648	73.26	44.8	0.14
322	SLV 9	-1868	65	2072	-82.45	-83.11	-0.16
322	SLV 10	-1868	65	2072	-82.45	-83.11	-0.16
322	SLV 11	-318	-41	7856	63.42	-18.52	0.12
322	SLV 12	-318	-41	7856	63.42	-18.52	0.12
322	SLV 13	-3013	41	5505	-42.88	-134.38	-0.09
322	SLV 14	-3013	41	5505	-42.88	-134.38	-0.09
322	SLV 15	-2548	9	7240	0.88	-115	0
322	SLV 16	-2548	9	7240	0.88	-115	0
323	SLU 1	-423	1	4307	-1.72	-17.23	0
323	SLU 2	-437	1	4214	-2.16	-17.7	0
323	SLU 3	-450	1	4462	-1.79	-18.41	0
323	SLU 4	-458	1	4406	-2.05	-18.7	0
323	SLU 5	-462	1	4339	-2.21	-18.82	0
323	SLU 6	-475	1	4587	-1.83	-19.53	0
323	SLU 7	-484	1	4531	-2.1	-19.82	0
323	SLU 8	-473	1	4557	-1.81	-19.47	0
323	SLU 9	-482	1	4501	-2.08	-19.76	0
323	SLU 10	-516	1	4734	-2.24	-20.86	0
323	SLU 11	-528	1	4982	-1.86	-21.57	0
323	SLU 12	-537	1	4926	-2.13	-21.85	0
323	SLU 13	-541	1	4859	-2.28	-21.98	0
323	SLU 14	-553	1	5107	-1.91	-22.69	0
323	SLU 15	-562	1	5051	-2.17	-22.98	0
323	SLU 16	-552	1	5077	-1.89	-22.63	0
323	SLU 17	-560	1	5021	-2.15	-22.91	0
323	SLU 18	-535	1	5051	-1.83	-21.74	0
323	SLU 19	-544	1	4995	-2.09	-22.02	0
323	SLU 20	-560	1	5176	-1.87	-22.86	0
323	SLU 21	-569	1	5120	-2.14	-23.14	0
323	SLU 22	-499	1	4813	-1.84	-20.32	0
323	SLU 23	-513	1	4720	-2.28	-20.79	0
323	SLU 24	-526	1	4968	-1.9	-21.5	0
323	SLU 25	-534	1	4912	-2.17	-21.79	0
323	SLU 26	-538	1	4845	-2.32	-21.91	0
323	SLU 27	-551	1	5093	-1.95	-22.63	0
323	SLU 28	-560	1	5037	-2.21	-22.91	0
323	SLU 29	-549	1	5063	-1.93	-22.56	0
323	SLU 30	-558	1	5007	-2.19	-22.85	0
323	SLU 31	-592	1	5240	-2.35	-23.95	0
323	SLU 32	-604	1	5488	-1.98	-24.66	0
323	SLU 33	-613	1	5432	-2.24	-24.94	0
323	SLU 34	-617	1	5365	-2.39	-25.07	0
323	SLU 35	-630	1	5613	-2.02	-25.78	0
323	SLU 36	-638	1	5557	-2.28	-26.07	0
323	SLU 37	-628	1	5583	-2	-25.72	0
323	SLU 38	-636	1	5527	-2.26	-26	0
323	SLU 39	-611	1	5556	-1.94	-24.83	0
323	SLU 40	-620	1	5500	-2.21	-25.11	0
323	SLU 41	-636	1	5681	-1.99	-25.95	0
323	SLU 42	-645	1	5625	-2.25	-26.24	0
323	SLU 43	-523	1	5426	-2.2	-21.33	0
323	SLU 44	-538	2	5333	-2.64	-21.81	0
323	SLU 45	-550	1	5581	-2.27	-22.52	0
323	SLU 46	-559	1	5525	-2.53	-22.8	0
323	SLU 47	-563	2	5458	-2.68	-22.93	0
323	SLU 48	-576	1	5706	-2.31	-23.64	0
323	SLU 49	-584	1	5650	-2.58	-23.93	0
323	SLU 50	-574	1	5676	-2.29	-23.58	0
323	SLU 51	-582	1	5620	-2.55	-23.86	0
323	SLU 52	-616	2	5853	-2.71	-24.97	0
323	SLU 53	-629	1	6101	-2.34	-25.68	0
323	SLU 54	-638	1	6045	-2.6	-25.96	0
323	SLU 55	-642	2	5978	-2.76	-26.09	0
323	SLU 56	-654	1	6226	-2.39	-26.8	0

Nodo	Cont.	Reazione a traslazione			Reazione a rotazione		
Ind.	N.br.	x	y	z	x	y	z
323	SLU 57	-663	1	6170	-2.65	-27.08	0
323	SLU 58	-652	1	6196	-2.36	-26.74	0
323	SLU 59	-661	1	6140	-2.63	-27.02	0
323	SLU 60	-636	1	6169	-2.31	-25.84	0
323	SLU 61	-644	1	6113	-2.57	-26.13	0
323	SLU 62	-661	1	6294	-2.35	-26.97	0
323	SLU 63	-669	1	6238	-2.61	-27.25	0
323	SLU 64	-599	1	5932	-2.31	-24.43	0
323	SLU 65	-614	2	5839	-2.75	-24.9	0
323	SLU 66	-627	1	6087	-2.38	-25.61	0
323	SLU 67	-635	1	6031	-2.64	-25.9	0
323	SLU 68	-639	2	5964	-2.8	-26.02	0
323	SLU 69	-652	1	6212	-2.43	-26.73	0
323	SLU 70	-660	1	6156	-2.69	-27.02	0
323	SLU 71	-650	1	6182	-2.4	-26.67	0
323	SLU 72	-658	1	6126	-2.67	-26.96	0
323	SLU 73	-692	2	6359	-2.83	-28.06	0
323	SLU 74	-705	1	6607	-2.45	-28.77	0
323	SLU 75	-714	1	6551	-2.72	-29.05	0
323	SLU 76	-718	2	6484	-2.87	-29.18	0
323	SLU 77	-730	1	6732	-2.5	-29.89	0
323	SLU 78	-739	1	6676	-2.76	-30.18	0
323	SLU 79	-728	1	6702	-2.48	-29.83	0
323	SLU 80	-737	1	6646	-2.74	-30.11	0
323	SLU 81	-712	1	6675	-2.42	-28.94	0
323	SLU 82	-720	1	6619	-2.68	-29.22	0
323	SLU 83	-737	1	6800	-2.46	-30.06	0
323	SLU 84	-745	1	6744	-2.73	-30.34	0
323	SLE RA 1	-444	1	4452	-1.75	-18.11	0
323	SLE RA 2	-454	1	4390	-2.05	-18.43	0
323	SLE RA 3	-462	1	4555	-1.8	-18.9	0
323	SLE RA 4	-468	1	4518	-1.97	-19.09	0
323	SLE RA 5	-471	1	4473	-2.08	-19.17	0
323	SLE RA 6	-479	1	4638	-1.83	-19.65	0
323	SLE RA 7	-485	1	4601	-2	-19.84	0
323	SLE RA 8	-478	1	4618	-1.82	-19.61	0
323	SLE RA 9	-484	1	4581	-1.99	-19.8	0
323	SLE RA 10	-506	1	4736	-2.1	-20.53	0
323	SLE RA 11	-515	1	4902	-1.85	-21	0
323	SLE RA 12	-521	1	4865	-2.02	-21.19	0
323	SLE RA 13	-523	1	4820	-2.13	-21.28	0
323	SLE RA 14	-532	1	4985	-1.88	-21.75	0
323	SLE RA 15	-537	1	4948	-2.05	-21.94	0
323	SLE RA 16	-530	1	4965	-1.86	-21.71	0
323	SLE RA 17	-536	1	4928	-2.04	-21.9	0
323	SLE RA 18	-519	1	4947	-1.83	-21.12	0
323	SLE RA 19	-525	1	4910	-2	-21.31	0
323	SLE RA 20	-536	1	5031	-1.86	-21.86	0
323	SLE RA 21	-542	1	4993	-2.03	-22.05	0
323	SLE FR 1	-444	1	4452	-1.75	-18.11	0
323	SLE FR 2	-446	1	4439	-1.81	-18.17	0
323	SLE FR 3	-451	1	4485	-1.77	-18.41	0
323	SLE FR 4	-469	1	4588	-1.83	-19.08	0
323	SLE FR 5	-474	1	4634	-1.79	-19.31	0
323	SLE FR 6	-482	1	4700	-1.79	-19.61	0
323	SLE QP 1	-444	1	4452	-1.75	-18.11	0
323	SLE QP 2	-467	1	4600	-1.78	-19.01	0
323	SLD 1	623	-6	2886	-1.94	29.2	0
323	SLD 2	623	-6	2886	-1.94	29.2	0
323	SLD 3	433	-11	3794	9.01	21.73	0.02
323	SLD 4	433	-11	3794	9.01	21.73	0.02
323	SLD 5	148	8	2709	-18.43	6.78	-0.03
323	SLD 6	148	8	2709	-18.43	6.78	-0.03
323	SLD 7	-484	-12	5736	18.06	-18.12	0.03
323	SLD 8	-484	-12	5736	18.06	-18.12	0.03
323	SLD 9	-449	13	3465	-21.61	-19.9	-0.03
323	SLD 10	-449	13	3465	-21.61	-19.9	-0.03
323	SLD 11	-1081	-6	6492	14.87	-44.8	0.03
323	SLD 12	-1081	-6	6492	14.87	-44.8	0.03
323	SLD 13	-1367	13	5407	-12.56	-59.75	-0.02
323	SLD 14	-1367	13	5407	-12.56	-59.75	-0.02
323	SLD 15	-1556	7	6315	-1.62	-67.22	0
323	SLD 16	-1556	7	6315	-1.62	-67.22	0
323	SLV 1	2017	-15	674	-2.51	90.89	0
323	SLV 2	2017	-15	674	-2.51	90.89	0
323	SLV 3	1569	-29	2795	25.55	73.15	0.05
323	SLV 4	1569	-29	2795	25.55	73.15	0.05
323	SLV 5	957	19	206	-44.56	40.86	-0.07
323	SLV 6	957	19	206	-44.56	40.86	-0.07
323	SLV 7	-535	-31	7275	48.99	-18.26	0.09
323	SLV 8	-535	-31	7275	48.99	-18.26	0.09
323	SLV 9	-398	32	1926	-52.54	-19.76	-0.09
323	SLV 10	-398	32	1926	-52.54	-19.76	-0.09
323	SLV 11	-1891	-17	8995	41.01	-78.88	0.07
323	SLV 12	-1891	-17	8995	41.01	-78.88	0.07
323	SLV 13	-2503	31	6406	-29.1	-111.17	-0.05
323	SLV 14	-2503	31	6406	-29.1	-111.17	-0.05
323	SLV 15	-2950	16	8527	-1.04	-128.91	0
323	SLV 16	-2950	16	8527	-1.04	-128.91	0
324	SLU 1	-698	-7	4694	0.76	-34.21	0.13
324	SLU 2	-711	-6	4559	0.39	-34.44	0.13

Nodo	Cont.	Reazione a traslazione			Reazione a rotazione		
Ind.	N.br.	x	y	z	x	y	z
324	SLU 3	-734	-7	4878	0.8	-35.99	0.14
324	SLU 4	-742	-7	4797	0.57	-36.12	0.13
324	SLU 5	-743	-6	4711	0.42	-36	0.13
324	SLU 6	-766	-7	5029	0.83	-37.55	0.14
324	SLU 7	-774	-7	4948	0.61	-37.68	0.14
324	SLU 8	-762	-7	4997	0.83	-37.34	0.14
324	SLU 9	-770	-7	4916	0.6	-37.47	0.14
324	SLU 10	-824	-7	5118	0.56	-39.78	0.14
324	SLU 11	-847	-8	5436	0.97	-41.33	0.15
324	SLU 12	-855	-8	5355	0.75	-41.47	0.15
324	SLU 13	-856	-7	5269	0.59	-41.35	0.14
324	SLU 14	-879	-8	5588	1	-42.9	0.15
324	SLU 15	-887	-8	5507	0.78	-43.03	0.15
324	SLU 16	-875	-8	5555	1	-42.69	0.15
324	SLU 17	-883	-8	5474	0.77	-42.82	0.15
324	SLU 18	-860	-8	5492	1.01	-41.85	0.15
324	SLU 19	-867	-8	5412	0.78	-41.99	0.15
324	SLU 20	-892	-8	5644	1.04	-43.42	0.16
324	SLU 21	-899	-8	5563	0.82	-43.55	0.15
324	SLU 22	-807	-8	5247	0.91	-39.42	0.15
324	SLU 23	-820	-7	5112	0.54	-39.65	0.14
324	SLU 24	-843	-8	5430	0.95	-41.2	0.15
324	SLU 25	-851	-8	5349	0.73	-41.33	0.15
324	SLU 26	-852	-7	5263	0.57	-41.21	0.14
324	SLU 27	-875	-8	5581	0.98	-42.76	0.15
324	SLU 28	-882	-8	5500	0.76	-42.89	0.15
324	SLU 29	-871	-8	5549	0.98	-42.55	0.15
324	SLU 30	-879	-8	5468	0.76	-42.68	0.15
324	SLU 31	-933	-8	5671	0.71	-45	0.15
324	SLU 32	-956	-9	5989	1.12	-46.54	0.16
324	SLU 33	-964	-9	5908	0.9	-46.68	0.16
324	SLU 34	-965	-8	5822	0.75	-46.56	0.16
324	SLU 35	-988	-9	6140	1.16	-48.11	0.17
324	SLU 36	-996	-9	6059	0.93	-48.24	0.16
324	SLU 37	-984	-9	6108	1.15	-47.9	0.17
324	SLU 38	-992	-9	6027	0.93	-48.03	0.16
324	SLU 39	-969	-9	6045	1.16	-47.06	0.16
324	SLU 40	-976	-9	5964	0.94	-47.2	0.16
324	SLU 41	-1001	-9	6196	1.19	-48.63	0.17
324	SLU 42	-1008	-9	6115	0.97	-48.76	0.16
324	SLU 43	-871	-8	5913	0.94	-42.69	0.17
324	SLU 44	-883	-8	5778	0.56	-42.91	0.16
324	SLU 45	-906	-9	6096	0.97	-44.46	0.17
324	SLU 46	-914	-8	6016	0.75	-44.6	0.17
324	SLU 47	-915	-8	5929	0.6	-44.48	0.16
324	SLU 48	-938	-9	6248	1.01	-46.03	0.18
324	SLU 49	-946	-9	6167	0.78	-46.16	0.17
324	SLU 50	-934	-9	6215	1	-45.82	0.18
324	SLU 51	-942	-9	6135	0.78	-45.95	0.17
324	SLU 52	-996	-9	6337	0.74	-48.26	0.17
324	SLU 53	-1019	-10	6655	1.15	-49.81	0.19
324	SLU 54	-1027	-9	6574	0.92	-49.94	0.18
324	SLU 55	-1028	-9	6488	0.77	-49.82	0.18
324	SLU 56	-1051	-10	6806	1.18	-51.37	0.19
324	SLU 57	-1059	-10	6725	0.95	-51.51	0.19
324	SLU 58	-1047	-10	6774	1.17	-51.16	0.19
324	SLU 59	-1055	-10	6693	0.95	-51.3	0.18
324	SLU 60	-1032	-10	6711	1.18	-50.33	0.19
324	SLU 61	-1039	-9	6630	0.96	-50.46	0.18
324	SLU 62	-1064	-10	6862	1.22	-51.89	0.19
324	SLU 63	-1071	-10	6782	0.99	-52.03	0.19
324	SLU 64	-979	-9	6466	1.09	-47.9	0.18
324	SLU 65	-992	-9	6331	0.72	-48.12	0.17
324	SLU 66	-1015	-10	6649	1.13	-49.67	0.19
324	SLU 67	-1023	-9	6568	0.9	-49.81	0.18
324	SLU 68	-1024	-9	6482	0.75	-49.69	0.18
324	SLU 69	-1047	-10	6800	1.16	-51.24	0.19
324	SLU 70	-1055	-10	6719	0.94	-51.37	0.19
324	SLU 71	-1043	-10	6768	1.16	-51.03	0.19
324	SLU 72	-1051	-10	6687	0.93	-51.16	0.18
324	SLU 73	-1105	-10	6890	0.89	-53.47	0.19
324	SLU 74	-1128	-11	7208	1.3	-55.02	0.2
324	SLU 75	-1136	-10	7127	1.08	-55.16	0.19
324	SLU 76	-1137	-10	7041	0.92	-55.04	0.19
324	SLU 77	-1160	-11	7359	1.33	-56.58	0.2
324	SLU 78	-1168	-11	7278	1.11	-56.72	0.2
324	SLU 79	-1156	-11	7327	1.33	-56.38	0.2
324	SLU 80	-1164	-11	7246	1.1	-56.51	0.2
324	SLU 81	-1141	-11	7264	1.34	-55.54	0.2
324	SLU 82	-1148	-10	7183	1.11	-55.68	0.2
324	SLU 83	-1173	-11	7415	1.37	-57.1	0.2
324	SLU 84	-1180	-11	7334	1.15	-57.24	0.2
324	SLE RA 1	-729	-7	4852	0.8	-35.7	0.14
324	SLE RA 2	-738	-7	4762	0.56	-35.85	0.13
324	SLE RA 3	-753	-7	4974	0.83	-36.88	0.14
324	SLE RA 4	-758	-7	4920	0.68	-36.97	0.14
324	SLE RA 5	-759	-7	4863	0.58	-36.89	0.13
324	SLE RA 6	-775	-7	5075	0.85	-37.93	0.14
324	SLE RA 7	-780	-7	5021	0.7	-38.01	0.14
324	SLE RA 8	-772	-7	5054	0.85	-37.79	0.14
324	SLE RA 9	-777	-7	5000	0.7	-37.87	0.14

Nodo	Cont.	Reazione a traslazione			Reazione a rotazione		
Ind.	N.br.	x	y	z	x	y	z
324	SLE RA 10	-813	-7	5135	0.67	-39.42	0.14
324	SLE RA 11	-829	-8	5347	0.94	-40.45	0.15
324	SLE RA 12	-834	-8	5293	0.8	-40.54	0.15
324	SLE RA 13	-834	-7	5236	0.69	-40.46	0.14
324	SLE RA 14	-850	-8	5448	0.97	-41.49	0.15
324	SLE RA 15	-855	-8	5394	0.82	-41.58	0.15
324	SLE RA 16	-847	-8	5426	0.96	-41.35	0.15
324	SLE RA 17	-852	-8	5372	0.81	-41.44	0.15
324	SLE RA 18	-837	-8	5384	0.97	-40.8	0.15
324	SLE RA 19	-842	-8	5330	0.82	-40.88	0.15
324	SLE RA 20	-858	-8	5485	0.99	-41.84	0.15
324	SLE RA 21	-863	-8	5431	0.84	-41.93	0.15
324	SLE FR 1	-729	-7	4852	0.8	-35.7	0.14
324	SLE FR 2	-731	-7	4834	0.75	-35.73	0.14
324	SLE FR 3	-738	-7	4892	0.81	-36.12	0.14
324	SLE FR 4	-763	-7	4994	0.8	-37.26	0.14
324	SLE FR 5	-770	-7	5052	0.86	-37.65	0.14
324	SLE FR 6	-783	-8	5118	0.89	-38.25	0.14
324	SLE QP 1	-729	-7	4852	0.8	-35.7	0.14
324	SLE QP 2	-762	-7	5012	0.85	-37.23	0.14
324	SLD 1	305	4	2543	1.66	11.99	0.09
324	SLD 2	305	4	2543	1.66	11.99	0.09
324	SLD 3	122	0	3690	7.01	4.43	0.15
324	SLD 4	122	0	3690	7.01	4.43	0.15
324	SLD 5	-164	2	2532	-7.02	-11	0.03
324	SLD 6	-164	2	2532	-7.02	-11	0.03
324	SLD 7	-774	-11	6354	10.82	-36.19	0.24
324	SLD 8	-774	-11	6354	10.82	-36.19	0.24
324	SLD 9	-749	-4	3670	-9.11	-38.27	0.05
324	SLD 10	-749	-4	3670	-9.11	-38.27	0.05
324	SLD 11	-1359	-17	7491	8.73	-63.46	0.25
324	SLD 12	-1359	-17	7491	8.73	-63.46	0.25
324	SLD 13	-1646	-15	6334	-5.3	-78.89	0.13
324	SLD 14	-1646	-15	6334	-5.3	-78.89	0.13
324	SLD 15	-1829	-19	7480	0.05	-86.45	0.19
324	SLD 16	-1829	-19	7480	0.05	-86.45	0.19
324	SLV 1	1669	20	-632	2.57	74.89	0.01
324	SLV 2	1669	20	-632	2.57	74.89	0.01
324	SLV 3	1237	11	2050	16.25	56.96	0.16
324	SLV 4	1237	11	2050	16.25	56.96	0.16
324	SLV 5	622	16	-749	-19.39	23.59	-0.12
324	SLV 6	622	16	-749	-19.39	23.59	-0.12
324	SLV 7	-817	-17	8191	26.23	-36.16	0.36
324	SLV 8	-817	-17	8191	26.23	-36.16	0.36
324	SLV 9	-707	2	1833	-24.52	-38.3	-0.08
324	SLV 10	-707	2	1833	-24.52	-38.3	-0.08
324	SLV 11	-2145	-30	10772	21.1	-98.05	0.4
324	SLV 12	-2145	-30	10772	21.1	-98.05	0.4
324	SLV 13	-2761	-25	7974	-14.55	-131.42	0.12
324	SLV 14	-2761	-25	7974	-14.55	-131.42	0.12
324	SLV 15	-3192	-35	10655	-0.86	-149.35	0.27
324	SLV 16	-3192	-35	10655	-0.86	-149.35	0.27
325	SLU 1	-828	-701	7209	38.89	-24.13	0.7
325	SLU 2	-818	-638	6942	35.47	-24.05	0.66
325	SLU 3	-866	-727	7510	40.39	-25.32	0.73
325	SLU 4	-860	-689	7350	38.34	-25.28	0.71
325	SLU 5	-851	-658	7193	36.62	-25.11	0.69
325	SLU 6	-899	-746	7761	41.55	-26.38	0.75
325	SLU 7	-893	-709	7601	39.49	-26.34	0.73
325	SLU 8	-893	-740	7711	41.2	-26.25	0.75
325	SLU 9	-888	-702	7551	39.15	-26.2	0.73
325	SLU 10	-932	-714	7798	39.8	-27.56	0.75
325	SLU 11	-979	-802	8365	44.73	-28.84	0.81
325	SLU 12	-973	-765	8205	42.68	-28.79	0.8
325	SLU 13	-964	-733	8049	40.96	-28.62	0.78
325	SLU 14	-1012	-822	8617	45.88	-29.9	0.84
325	SLU 15	-1006	-784	8457	43.83	-29.85	0.82
325	SLU 16	-1007	-815	8567	45.54	-29.76	0.83
325	SLU 17	-1001	-778	8407	43.48	-29.71	0.82
325	SLU 18	-990	-809	8431	45.08	-29.15	0.82
325	SLU 19	-984	-771	8271	43.03	-29.1	0.8
325	SLU 20	-1023	-828	8682	46.24	-30.21	0.85
325	SLU 21	-1017	-791	8522	44.19	-30.16	0.83
325	SLU 22	-939	-778	8066	43.31	-27.56	0.78
325	SLU 23	-929	-716	7800	39.89	-27.49	0.75
325	SLU 24	-977	-804	8367	44.81	-28.76	0.81
325	SLU 25	-971	-767	8207	42.76	-28.71	0.79
325	SLU 26	-962	-735	8051	41.04	-28.55	0.78
325	SLU 27	-1010	-823	8618	45.97	-29.82	0.84
325	SLU 28	-1004	-786	8459	43.92	-29.77	0.82
325	SLU 29	-1005	-817	8569	45.62	-29.68	0.83
325	SLU 30	-999	-779	8409	43.57	-29.64	0.81
325	SLU 31	-1043	-791	8656	44.23	-31	0.84
325	SLU 32	-1091	-880	9223	49.15	-32.27	0.9
325	SLU 33	-1085	-842	9063	47.1	-32.23	0.88
325	SLU 34	-1076	-811	8907	45.38	-32.06	0.87
325	SLU 35	-1123	-899	9474	50.31	-33.33	0.93
325	SLU 36	-1118	-862	9314	48.25	-33.29	0.91
325	SLU 37	-1118	-892	9424	49.96	-33.2	0.92
325	SLU 38	-1112	-855	9264	47.91	-33.15	0.9
325	SLU 39	-1101	-886	9289	49.51	-32.58	0.91

Nodo	Cont.	Reazione a traslazione			Reazione a rotazione		
Ind.	N.br.	x	y	z	x	y	z
325	SLU 40	-1095	-848	9129	47.46	-32.54	0.89
325	SLU 41	-1134	-905	9540	50.66	-33.64	0.93
325	SLU 42	-1128	-868	9380	48.61	-33.6	0.92
325	SLU 43	-1038	-884	9077	49.04	-30.19	0.87
325	SLU 44	-1028	-822	8810	45.62	-30.11	0.84
325	SLU 45	-1076	-910	9378	50.54	-31.38	0.9
325	SLU 46	-1070	-873	9218	48.49	-31.34	0.89
325	SLU 47	-1061	-841	9061	46.77	-31.17	0.87
325	SLU 48	-1109	-930	9629	51.7	-32.44	0.93
325	SLU 49	-1103	-892	9469	49.64	-32.4	0.91
325	SLU 50	-1104	-923	9579	51.35	-32.31	0.92
325	SLU 51	-1098	-886	9419	49.29	-32.26	0.91
325	SLU 52	-1142	-898	9666	49.95	-33.62	0.93
325	SLU 53	-1189	-986	10234	54.88	-34.9	0.99
325	SLU 54	-1184	-948	10074	52.83	-34.85	0.97
325	SLU 55	-1175	-917	9917	51.11	-34.68	0.96
325	SLU 56	-1222	-1005	10485	56.03	-35.96	1.02
325	SLU 57	-1216	-968	10325	53.98	-35.91	1
325	SLU 58	-1217	-999	10435	55.69	-35.82	1.01
325	SLU 59	-1211	-961	10275	53.63	-35.77	0.99
325	SLU 60	-1200	-992	10300	55.23	-35.2	1
325	SLU 61	-1194	-955	10140	53.18	-35.16	0.98
325	SLU 62	-1233	-1012	10551	56.39	-36.27	1.03
325	SLU 63	-1227	-974	10391	54.34	-36.22	1.01
325	SLU 64	-1149	-962	9935	53.46	-33.62	0.96
325	SLU 65	-1140	-899	9668	50.04	-33.54	0.93
325	SLU 66	-1187	-988	10236	54.96	-34.82	0.99
325	SLU 67	-1181	-950	10076	52.91	-34.77	0.97
325	SLU 68	-1172	-919	9919	51.19	-34.61	0.96
325	SLU 69	-1220	-1007	10487	56.12	-35.88	1.02
325	SLU 70	-1214	-970	10327	54.07	-35.83	1
325	SLU 71	-1215	-1001	10437	55.77	-35.74	1.01
325	SLU 72	-1209	-963	10277	53.72	-35.7	0.99
325	SLU 73	-1253	-975	10524	54.38	-37.06	1.02
325	SLU 74	-1301	-1063	11092	59.3	-38.33	1.08
325	SLU 75	-1295	-1026	10932	57.25	-38.29	1.06
325	SLU 76	-1286	-994	10775	55.53	-38.12	1.04
325	SLU 77	-1334	-1083	11343	60.46	-39.39	1.11
325	SLU 78	-1328	-1045	11183	58.4	-39.35	1.09
325	SLU 79	-1328	-1076	11293	60.11	-39.26	1.1
325	SLU 80	-1323	-1039	11133	58.06	-39.21	1.08
325	SLU 81	-1311	-1070	11158	59.66	-38.64	1.09
325	SLU 82	-1306	-1032	10998	57.6	-38.59	1.07
325	SLU 83	-1344	-1089	11409	60.81	-39.7	1.11
325	SLU 84	-1338	-1052	11249	58.76	-39.66	1.09
325	SLE RA 1	-860	-723	7454	40.15	-25.11	0.72
325	SLE RA 2	-853	-681	7276	37.87	-25.06	0.7
325	SLE RA 3	-885	-740	7654	41.15	-25.91	0.74
325	SLE RA 4	-881	-715	7548	39.78	-25.88	0.73
325	SLE RA 5	-875	-694	7443	38.64	-25.76	0.72
325	SLE RA 6	-907	-753	7822	41.92	-26.61	0.76
325	SLE RA 7	-903	-728	7715	40.56	-26.58	0.75
325	SLE RA 8	-903	-749	7788	41.69	-26.52	0.75
325	SLE RA 9	-899	-724	7682	40.32	-26.49	0.74
325	SLE RA 10	-929	-732	7846	40.76	-27.4	0.76
325	SLE RA 11	-961	-790	8225	44.05	-28.25	0.8
325	SLE RA 12	-957	-766	8118	42.68	-28.22	0.79
325	SLE RA 13	-951	-745	8014	41.53	-28.11	0.78
325	SLE RA 14	-982	-803	8392	44.82	-28.96	0.82
325	SLE RA 15	-979	-778	8286	43.45	-28.92	0.8
325	SLE RA 16	-979	-799	8359	44.58	-28.86	0.81
325	SLE RA 17	-975	-774	8252	43.21	-28.83	0.8
325	SLE RA 18	-968	-795	8269	44.28	-28.45	0.8
325	SLE RA 19	-964	-770	8162	42.91	-28.42	0.79
325	SLE RA 20	-990	-808	8436	45.05	-29.16	0.82
325	SLE RA 21	-986	-783	8330	43.68	-29.13	0.81
325	SLE FR 1	-860	-723	7454	40.15	-25.11	0.72
325	SLE FR 2	-858	-714	7418	39.69	-25.1	0.72
325	SLE FR 3	-868	-728	7521	40.46	-25.39	0.73
325	SLE FR 4	-891	-736	7663	40.93	-26.1	0.74
325	SLE FR 5	-901	-750	7765	41.7	-26.39	0.75
325	SLE FR 6	-914	-759	7861	42.22	-26.78	0.76
325	SLE QP 1	-860	-723	7454	40.15	-25.11	0.72
325	SLE QP 2	-892	-744	7698	41.39	-26.11	0.75
325	SLD 1	-93	-417	3026	20.39	3.78	0.21
325	SLD 2	-93	-417	3026	20.39	3.78	0.21
325	SLD 3	-243	-769	5008	40.12	-0.85	0.41
325	SLD 4	-243	-769	5008	40.12	-0.85	0.41
325	SLD 5	-425	-111	3290	5.17	-10.11	0.28
325	SLD 6	-425	-111	3290	5.17	-10.11	0.28
325	SLD 7	-925	-1287	9898	70.93	-25.56	0.95
325	SLD 8	-925	-1287	9898	70.93	-25.56	0.95
325	SLD 9	-859	-202	5498	11.85	-26.66	0.54
325	SLD 10	-859	-202	5498	11.85	-26.66	0.54
325	SLD 11	-1359	-1378	12107	77.61	-42.11	1.21
325	SLD 12	-1359	-1378	12107	77.61	-42.11	1.21
325	SLD 13	-1540	-719	10388	42.66	-51.37	1.08
325	SLD 14	-1540	-719	10388	42.66	-51.37	1.08
325	SLD 15	-1690	-1072	12371	62.39	-56.01	1.28
325	SLD 16	-1690	-1072	12371	62.39	-56.01	1.28
325	SLV 1	927	17	-2975	-7.07	41.99	-0.48

Nodo	Cont.	Reazione a traslazione			Reazione a rotazione		
Ind.	N.br.	x	y	z	x	y	z
325	SLV 2	927	17	-2975	-7.07	41.99	-0.48
325	SLV 3	572	-805	1670	38.96	30.97	0
325	SLV 4	572	-805	1670	38.96	30.97	0
325	SLV 5	193	731	-2549	-42.95	11.04	-0.34
325	SLV 6	193	731	-2549	-42.95	11.04	-0.34
325	SLV 7	-992	-2010	12935	110.46	-25.7	1.24
325	SLV 8	-992	-2010	12935	110.46	-25.7	1.24
325	SLV 9	-792	521	2461	-27.68	-26.52	0.25
325	SLV 10	-792	521	2461	-27.68	-26.52	0.25
325	SLV 11	-1977	-2220	17946	125.73	-63.26	1.84
325	SLV 12	-1977	-2220	17946	125.73	-63.26	1.84
325	SLV 13	-2356	-683	13726	43.82	-83.2	1.5
325	SLV 14	-2356	-683	13726	43.82	-83.2	1.5
325	SLV 15	-2711	-1506	18372	89.85	-94.22	1.97
325	SLV 16	-2711	-1506	18372	89.85	-94.22	1.97
326	SLU 1	0	-427	3326	16.27	-1.4	0
326	SLU 2	0	-427	3330	16.29	-1.4	0
326	SLU 3	0	-435	3413	16.62	-1.44	0
326	SLU 4	0	-436	3415	16.63	-1.44	0
326	SLU 5	0	-429	3379	16.39	-1.41	0
326	SLU 6	0	-437	3463	16.72	-1.45	0
326	SLU 7	0	-438	3465	16.73	-1.45	0
326	SLU 8	0	-431	3426	16.47	-1.43	0
326	SLU 9	0	-431	3428	16.49	-1.43	0
326	SLU 10	0	-488	3796	18.61	-1.66	0
326	SLU 11	0	-496	3880	18.94	-1.7	0
326	SLU 12	0	-496	3882	18.95	-1.7	0
326	SLU 13	0	-490	3846	18.71	-1.67	0
326	SLU 14	0	-498	3930	19.04	-1.71	0
326	SLU 15	0	-498	3932	19.05	-1.71	0
326	SLU 16	0	-491	3892	18.79	-1.69	0
326	SLU 17	0	-491	3895	18.81	-1.69	0
326	SLU 18	0	-513	3993	19.58	-1.77	0
326	SLU 19	0	-514	3995	19.6	-1.77	0
326	SLU 20	0	-515	4043	19.69	-1.78	0
326	SLU 21	0	-515	4045	19.7	-1.78	0
326	SLU 22	0	-490	3776	18.63	-1.65	0
326	SLU 23	0	-490	3780	18.65	-1.65	0
326	SLU 24	0	-498	3863	18.98	-1.69	0
326	SLU 25	0	-499	3865	18.99	-1.69	0
326	SLU 26	0	-492	3830	18.75	-1.67	0
326	SLU 27	0	-500	3913	19.08	-1.71	0
326	SLU 28	0	-500	3915	19.09	-1.71	0
326	SLU 29	0	-493	3876	18.83	-1.68	0
326	SLU 30	0	-494	3878	18.85	-1.68	0
326	SLU 31	0	-551	4247	20.97	-1.91	0
326	SLU 32	0	-559	4330	21.3	-1.95	0
326	SLU 33	0	-559	4332	21.31	-1.95	0
326	SLU 34	0	-553	4296	21.07	-1.93	0
326	SLU 35	0	-561	4380	21.4	-1.97	0
326	SLU 36	0	-561	4382	21.41	-1.97	0
326	SLU 37	0	-554	4343	21.15	-1.94	0
326	SLU 38	0	-554	4345	21.17	-1.94	0
326	SLU 39	0	-576	4443	21.94	-2.03	0
326	SLU 40	0	-576	4445	21.96	-2.02	0
326	SLU 41	0	-578	4493	22.05	-2.04	0
326	SLU 42	0	-578	4495	22.06	-2.04	0
326	SLU 43	0	-533	4169	20.34	-1.73	0
326	SLU 44	0	-534	4173	20.36	-1.73	0
326	SLU 45	0	-542	4256	20.69	-1.77	0
326	SLU 46	0	-542	4259	20.7	-1.77	0
326	SLU 47	0	-536	4223	20.46	-1.75	0
326	SLU 48	0	-544	4306	20.79	-1.78	0
326	SLU 49	0	-544	4309	20.8	-1.78	0
326	SLU 50	0	-537	4269	20.54	-1.76	0
326	SLU 51	0	-537	4271	20.56	-1.76	0
326	SLU 52	0	-594	4640	22.68	-1.99	0
326	SLU 53	0	-603	4723	23.01	-2.03	0
326	SLU 54	0	-603	4725	23.02	-2.03	0
326	SLU 55	0	-596	4690	22.78	-2	0
326	SLU 56	0	-604	4773	23.11	-2.04	0
326	SLU 57	0	-605	4775	23.12	-2.04	0
326	SLU 58	0	-598	4736	22.86	-2.02	0
326	SLU 59	0	-598	4738	22.88	-2.02	0
326	SLU 60	0	-620	4836	23.66	-2.1	0
326	SLU 61	0	-620	4838	23.67	-2.1	0
326	SLU 62	0	-622	4886	23.76	-2.12	0
326	SLU 63	0	-622	4888	23.77	-2.12	0
326	SLU 64	0	-596	4619	22.7	-1.99	0
326	SLU 65	0	-597	4623	22.72	-1.99	0
326	SLU 66	0	-605	4707	23.05	-2.02	0
326	SLU 67	0	-605	4709	23.06	-2.02	0
326	SLU 68	0	-598	4673	22.82	-2	0
326	SLU 69	0	-607	4756	23.15	-2.04	0
326	SLU 70	0	-607	4759	23.16	-2.04	0
326	SLU 71	0	-600	4719	22.9	-2.02	0
326	SLU 72	0	-600	4721	22.92	-2.02	0
326	SLU 73	0	-657	5090	25.04	-2.25	0
326	SLU 74	0	-665	5173	25.37	-2.28	0
326	SLU 75	0	-666	5176	25.38	-2.28	0
326	SLU 76	0	-659	5140	25.14	-2.26	0

Nodo	Cont.	Reazione a traslazione			Reazione a rotazione		
Ind.	N.br.	x	y	z	x	y	z
326	SLU 77	0	-667	5223	25.47	-2.3	0
326	SLU 78	0	-667	5226	25.48	-2.3	0
326	SLU 79	0	-660	5186	25.23	-2.28	0
326	SLU 80	0	-661	5188	25.24	-2.28	0
326	SLU 81	0	-683	5286	26.02	-2.36	0
326	SLU 82	0	-683	5288	26.03	-2.36	0
326	SLU 83	0	-685	5336	26.12	-2.37	0
326	SLU 84	0	-685	5338	26.13	-2.37	0
326	SLE RA 1	0	-445	3454	16.94	-1.47	0
326	SLE RA 2	0	-445	3457	16.96	-1.47	0
326	SLE RA 3	0	-451	3513	17.17	-1.5	0
326	SLE RA 4	0	-451	3514	17.18	-1.5	0
326	SLE RA 5	0	-446	3490	17.03	-1.48	0
326	SLE RA 6	0	-452	3546	17.24	-1.51	0
326	SLE RA 7	0	-452	3547	17.25	-1.51	0
326	SLE RA 8	0	-447	3521	17.08	-1.49	0
326	SLE RA 9	0	-447	3522	17.09	-1.49	0
326	SLE RA 10	0	-485	3768	18.5	-1.64	0
326	SLE RA 11	0	-491	3824	18.72	-1.67	0
326	SLE RA 12	0	-491	3825	18.73	-1.67	0
326	SLE RA 13	0	-487	3801	18.57	-1.65	0
326	SLE RA 14	0	-492	3857	18.79	-1.68	0
326	SLE RA 15	0	-492	3859	18.8	-1.68	0
326	SLE RA 16	0	-488	3832	18.63	-1.67	0
326	SLE RA 17	0	-488	3834	18.63	-1.66	0
326	SLE RA 18	0	-502	3899	19.15	-1.72	0
326	SLE RA 19	0	-503	3900	19.16	-1.72	0
326	SLE RA 20	0	-504	3932	19.22	-1.73	0
326	SLE RA 21	0	-504	3934	19.23	-1.73	0
326	SLE FR 1	0	-445	3454	16.94	-1.47	0
326	SLE FR 2	0	-445	3455	16.95	-1.47	0
326	SLE FR 3	0	-445	3468	16.97	-1.48	0
326	SLE FR 4	0	-462	3588	17.61	-1.55	0
326	SLE FR 5	0	-463	3601	17.63	-1.55	0
326	SLE FR 6	0	-474	3677	18.05	-1.6	0
326	SLE QP 1	0	-445	3454	16.94	-1.47	0
326	SLE QP 2	0	-462	3588	17.61	-1.55	0
326	SLD 1	0	-122	3127	4.08	-0.36	-0.01
326	SLD 2	0	-122	3127	4.08	-0.36	-0.01
326	SLD 3	-1	-573	3599	22.23	-1.07	0
326	SLD 4	-1	-573	3599	22.23	-1.07	0
326	SLD 5	2	325	2734	-13.97	-0.11	0
326	SLD 6	2	325	2734	-13.97	-0.11	0
326	SLD 7	-2	-1180	4307	46.51	-2.49	0
326	SLD 8	-2	-1180	4307	46.51	-2.49	0
326	SLD 9	3	256	2869	-11.3	-0.61	0
326	SLD 10	3	256	2869	-11.3	-0.61	0
326	SLD 11	-2	-1249	4441	49.18	-2.98	0
326	SLD 12	-2	-1249	4441	49.18	-2.98	0
326	SLD 13	1	-351	3577	12.98	-2.02	0
326	SLD 14	1	-351	3577	12.98	-2.02	0
326	SLD 15	0	-803	4049	31.13	-2.73	0
326	SLD 16	0	-803	4049	31.13	-2.73	0
326	SLV 1	0	340	2498	-14.26	1.32	-0.01
326	SLV 2	0	340	2498	-14.26	1.32	-0.01
326	SLV 3	-3	-725	3622	28.57	-0.46	-0.01
326	SLV 4	-3	-725	3622	28.57	-0.46	-0.01
326	SLV 5	5	1394	1556	-56.92	2.02	-0.01
326	SLV 6	5	1394	1556	-56.92	2.02	-0.01
326	SLV 7	-6	-2157	5303	85.86	-3.92	0
326	SLV 8	-6	-2157	5303	85.86	-3.92	0
326	SLV 9	6	1233	1873	-50.65	0.83	0
326	SLV 10	6	1233	1873	-50.65	0.83	0
326	SLV 11	-5	-2318	5620	92.13	-5.11	0
326	SLV 12	-5	-2318	5620	92.13	-5.11	0
326	SLV 13	3	-199	3554	6.64	-2.64	0
326	SLV 14	3	-199	3554	6.64	-2.64	0
326	SLV 15	0	-1264	4678	49.47	-4.42	0.01
326	SLV 16	0	-1264	4678	49.47	-4.42	0.01
328	SLU 1	-3	-487	2022	12.33	1.98	0.22
328	SLU 2	-3	-494	2047	12.57	1.96	0.22
328	SLU 3	-3	-504	2088	12.8	2.06	0.23
328	SLU 4	-3	-508	2103	12.94	2.05	0.23
328	SLU 5	-3	-507	2094	12.93	2.01	0.22
328	SLU 6	-3	-517	2135	13.16	2.11	0.23
328	SLU 7	-3	-521	2150	13.3	2.1	0.23
328	SLU 8	-3	-512	2115	13.05	2.08	0.23
328	SLU 9	-3	-517	2130	13.19	2.07	0.23
328	SLU 10	-3	-555	2303	14.05	2.26	0.25
328	SLU 11	-3	-565	2345	14.28	2.36	0.26
328	SLU 12	-3	-569	2360	14.42	2.35	0.26
328	SLU 13	-3	-567	2350	14.41	2.31	0.25
328	SLU 14	-3	-577	2391	14.64	2.41	0.27
328	SLU 15	-3	-582	2406	14.79	2.39	0.26
328	SLU 16	-3	-573	2372	14.53	2.38	0.26
328	SLU 17	-3	-577	2387	14.68	2.37	0.26
328	SLU 18	-3	-573	2388	14.45	2.41	0.27
328	SLU 19	-3	-578	2403	14.59	2.4	0.26
328	SLU 20	-3	-586	2435	14.81	2.46	0.27
328	SLU 21	-3	-591	2450	14.95	2.45	0.27
328	SLU 22	-3	-547	2274	13.83	2.29	0.25

Nodo	Cont.	Reazione a traslazione			Reazione a rotazione		
Ind.	N.br.	x	y	z	x	y	z
328	SLU 23	-3	-555	2299	14.07	2.27	0.25
328	SLU 24	-3	-565	2340	14.3	2.37	0.26
328	SLU 25	-3	-569	2355	14.44	2.35	0.26
328	SLU 26	-3	-567	2346	14.43	2.32	0.26
328	SLU 27	-3	-577	2387	14.66	2.41	0.27
328	SLU 28	-3	-582	2402	14.81	2.4	0.27
328	SLU 29	-3	-573	2367	14.55	2.39	0.26
328	SLU 30	-3	-577	2382	14.7	2.37	0.26
328	SLU 31	-4	-615	2555	15.56	2.57	0.28
328	SLU 32	-4	-625	2597	15.79	2.67	0.3
328	SLU 33	-4	-630	2612	15.93	2.65	0.29
328	SLU 34	-4	-628	2602	15.92	2.61	0.29
328	SLU 35	-4	-638	2643	16.15	2.71	0.3
328	SLU 36	-4	-642	2658	16.29	2.7	0.3
328	SLU 37	-4	-633	2624	16.04	2.69	0.3
328	SLU 38	-4	-638	2639	16.18	2.67	0.3
328	SLU 39	-4	-634	2640	15.95	2.72	0.3
328	SLU 40	-4	-638	2655	16.1	2.7	0.3
328	SLU 41	-4	-647	2687	16.31	2.77	0.31
328	SLU 42	-4	-651	2702	16.46	2.75	0.3
328	SLU 43	-4	-612	2542	15.51	2.48	0.27
328	SLU 44	-4	-619	2567	15.75	2.45	0.27
328	SLU 45	-4	-629	2608	15.98	2.55	0.28
328	SLU 46	-4	-634	2623	16.12	2.54	0.28
328	SLU 47	-4	-632	2614	16.11	2.5	0.28
328	SLU 48	-4	-642	2655	16.34	2.6	0.29
328	SLU 49	-4	-646	2670	16.48	2.59	0.29
328	SLU 50	-4	-637	2635	16.23	2.57	0.28
328	SLU 51	-4	-642	2650	16.38	2.56	0.28
328	SLU 52	-4	-680	2824	17.23	2.75	0.3
328	SLU 53	-4	-690	2865	17.46	2.85	0.31
328	SLU 54	-4	-694	2880	17.61	2.84	0.31
328	SLU 55	-4	-693	2870	17.59	2.8	0.31
328	SLU 56	-4	-703	2911	17.82	2.9	0.32
328	SLU 57	-4	-707	2927	17.97	2.88	0.32
328	SLU 58	-4	-698	2892	17.72	2.87	0.32
328	SLU 59	-4	-702	2907	17.86	2.86	0.32
328	SLU 60	-4	-699	2908	17.63	2.9	0.32
328	SLU 61	-4	-703	2923	17.77	2.89	0.32
328	SLU 62	-4	-711	2955	17.99	2.95	0.33
328	SLU 63	-4	-716	2970	18.13	2.94	0.32
328	SLU 64	-4	-673	2794	17.01	2.78	0.31
328	SLU 65	-4	-680	2819	17.25	2.76	0.3
328	SLU 66	-4	-690	2860	17.48	2.86	0.32
328	SLU 67	-4	-694	2875	17.63	2.84	0.31
328	SLU 68	-4	-693	2866	17.61	2.81	0.31
328	SLU 69	-4	-703	2907	17.84	2.91	0.32
328	SLU 70	-4	-707	2922	17.99	2.89	0.32
328	SLU 71	-4	-698	2887	17.74	2.88	0.32
328	SLU 72	-4	-702	2902	17.88	2.86	0.32
328	SLU 73	-4	-741	3076	18.74	3.06	0.34
328	SLU 74	-4	-750	3117	18.97	3.16	0.35
328	SLU 75	-4	-755	3132	19.11	3.14	0.35
328	SLU 76	-4	-753	3122	19.1	3.11	0.34
328	SLU 77	-4	-763	3163	19.33	3.2	0.35
328	SLU 78	-4	-768	3178	19.47	3.19	0.35
328	SLU 79	-4	-759	3144	19.22	3.18	0.35
328	SLU 80	-4	-763	3159	19.36	3.16	0.35
328	SLU 81	-4	-759	3160	19.13	3.21	0.35
328	SLU 82	-4	-764	3175	19.28	3.19	0.35
328	SLU 83	-4	-772	3207	19.5	3.26	0.36
328	SLU 84	-4	-776	3222	19.64	3.24	0.36
328	SLE RA 1	-3	-504	2094	12.76	2.07	0.23
328	SLE RA 2	-3	-509	2111	12.92	2.06	0.23
328	SLE RA 3	-3	-516	2138	13.07	2.12	0.23
328	SLE RA 4	-3	-518	2148	13.17	2.11	0.23
328	SLE RA 5	-3	-517	2142	13.16	2.09	0.23
328	SLE RA 6	-3	-524	2169	13.31	2.15	0.24
328	SLE RA 7	-3	-527	2179	13.41	2.15	0.24
328	SLE RA 8	-3	-521	2156	13.24	2.14	0.24
328	SLE RA 9	-3	-524	2166	13.33	2.13	0.24
328	SLE RA 10	-3	-549	2282	13.91	2.26	0.25
328	SLE RA 11	-3	-556	2309	14.06	2.32	0.26
328	SLE RA 12	-3	-559	2319	14.16	2.31	0.26
328	SLE RA 13	-3	-558	2313	14.15	2.29	0.25
328	SLE RA 14	-3	-564	2340	14.3	2.35	0.26
328	SLE RA 15	-3	-567	2350	14.4	2.35	0.26
328	SLE RA 16	-3	-561	2327	14.23	2.34	0.26
328	SLE RA 17	-3	-564	2337	14.32	2.33	0.26
328	SLE RA 18	-3	-562	2338	14.17	2.36	0.26
328	SLE RA 19	-3	-565	2348	14.27	2.35	0.26
328	SLE RA 20	-3	-570	2369	14.41	2.39	0.26
328	SLE RA 21	-3	-573	2379	14.51	2.38	0.26
328	SLE FR 1	-3	-504	2094	12.76	2.07	0.23
328	SLE FR 2	-3	-505	2097	12.79	2.07	0.23
328	SLE FR 3	-3	-507	2106	12.85	2.09	0.23
328	SLE FR 4	-3	-522	2170	13.21	2.15	0.24
328	SLE FR 5	-3	-525	2179	13.28	2.17	0.24
328	SLE FR 6	-3	-533	2216	13.46	2.21	0.24
328	SLE QP 1	-3	-504	2094	12.76	2.07	0.23
328	SLE QP 2	-3	-521	2167	13.18	2.16	0.24

Nodo	Cont.	Reazione a traslazione			Reazione a rotazione		
Ind.	N.br.	x	y	z	x	y	z
328	SLD 1	-14	-465	2008	11.26	0.2	-0.08
328	SLD 2	-14	-465	2008	11.26	0.2	-0.08
328	SLD 3	-11	-842	3140	24.05	0.65	-0.01
328	SLD 4	-11	-842	3140	24.05	0.65	-0.01
328	SLD 5	-10	68	402	-6.79	0.9	0.03
328	SLD 6	-10	68	402	-6.79	0.9	0.03
328	SLD 7	-1	-1190	4176	35.83	2.38	0.28
328	SLD 8	-1	-1190	4176	35.83	2.38	0.28
328	SLD 9	-5	147	158	-9.47	1.94	0.2
328	SLD 10	-5	147	158	-9.47	1.94	0.2
328	SLD 11	4	-1111	3932	33.15	3.42	0.45
328	SLD 12	4	-1111	3932	33.15	3.42	0.45
328	SLD 13	5	-201	1194	2.31	3.67	0.48
328	SLD 14	5	-201	1194	2.31	3.67	0.48
328	SLD 15	8	-578	2326	15.1	4.11	0.56
328	SLD 16	8	-578	2326	15.1	4.11	0.56
328	SLV 1	-30	-389	1787	8.71	-2.6	-0.55
328	SLV 2	-30	-389	1787	8.71	-2.6	-0.55
328	SLV 3	-23	-1279	4458	38.9	-1.5	-0.36
328	SLV 4	-23	-1279	4458	38.9	-1.5	-0.36
328	SLV 5	-21	869	-1998	-33.95	-0.95	-0.28
328	SLV 6	-21	869	-1998	-33.95	-0.95	-0.28
328	SLV 7	1	-2100	6905	66.68	2.74	0.35
328	SLV 8	1	-2100	6905	66.68	2.74	0.35
328	SLV 9	-7	1057	-2571	-40.32	1.58	0.13
328	SLV 10	-7	1057	-2571	-40.32	1.58	0.13
328	SLV 11	15	-1912	6332	60.31	5.26	0.76
328	SLV 12	15	-1912	6332	60.31	5.26	0.76
328	SLV 13	17	236	-124	-12.54	5.81	0.84
328	SLV 14	17	236	-124	-12.54	5.81	0.84
328	SLV 15	24	-654	2547	17.65	6.92	1.02
328	SLV 16	24	-654	2547	17.65	6.92	1.02
329	SLU 1	10	639	2992	-8.55	0.63	-0.19
329	SLU 2	10	640	2996	-8.49	0.62	-0.18
329	SLU 3	10	659	3085	-8.81	0.65	-0.19
329	SLU 4	10	660	3088	-8.78	0.64	-0.19
329	SLU 5	10	653	3057	-8.66	0.62	-0.19
329	SLU 6	10	673	3146	-8.97	0.65	-0.19
329	SLU 7	10	673	3149	-8.94	0.64	-0.19
329	SLU 8	10	666	3113	-8.88	0.64	-0.19
329	SLU 9	10	666	3116	-8.84	0.63	-0.19
329	SLU 10	12	728	3407	-9.63	0.7	-0.21
329	SLU 11	12	747	3496	-9.94	0.72	-0.22
329	SLU 12	12	748	3499	-9.91	0.71	-0.22
329	SLU 13	12	741	3468	-9.79	0.7	-0.21
329	SLU 14	12	760	3557	-10.11	0.73	-0.22
329	SLU 15	12	761	3560	-10.08	0.72	-0.22
329	SLU 16	12	754	3525	-10.01	0.71	-0.22
329	SLU 17	12	754	3527	-9.98	0.71	-0.21
329	SLU 18	12	765	3579	-10.16	0.74	-0.22
329	SLU 19	12	765	3582	-10.13	0.74	-0.22
329	SLU 20	12	778	3640	-10.33	0.75	-0.23
329	SLU 21	12	778	3643	-10.3	0.74	-0.22
329	SLU 22	11	723	3384	-9.63	0.71	-0.21
329	SLU 23	11	724	3389	-9.58	0.7	-0.21
329	SLU 24	12	743	3477	-9.9	0.73	-0.22
329	SLU 25	12	744	3480	-9.87	0.72	-0.22
329	SLU 26	12	737	3449	-9.75	0.7	-0.21
329	SLU 27	12	757	3538	-10.06	0.73	-0.22
329	SLU 28	12	757	3541	-10.03	0.72	-0.22
329	SLU 29	12	750	3506	-9.96	0.72	-0.22
329	SLU 30	12	750	3508	-9.93	0.71	-0.21
329	SLU 31	13	812	3800	-10.72	0.78	-0.24
329	SLU 32	13	831	3888	-11.03	0.81	-0.24
329	SLU 33	13	832	3891	-11	0.8	-0.24
329	SLU 34	13	825	3861	-10.88	0.78	-0.24
329	SLU 35	13	844	3949	-11.2	0.81	-0.24
329	SLU 36	13	845	3952	-11.17	0.8	-0.24
329	SLU 37	13	837	3917	-11.1	0.8	-0.24
329	SLU 38	13	838	3920	-11.07	0.79	-0.24
329	SLU 39	14	849	3971	-11.25	0.83	-0.25
329	SLU 40	14	849	3974	-11.22	0.82	-0.25
329	SLU 41	14	862	4032	-11.42	0.83	-0.25
329	SLU 42	14	862	4035	-11.39	0.82	-0.25
329	SLU 43	12	802	3755	-10.74	0.79	-0.23
329	SLU 44	12	803	3759	-10.68	0.78	-0.23
329	SLU 45	13	822	3848	-11	0.81	-0.24
329	SLU 46	13	823	3851	-10.97	0.8	-0.24
329	SLU 47	13	816	3820	-10.85	0.78	-0.23
329	SLU 48	13	836	3909	-11.16	0.81	-0.24
329	SLU 49	13	836	3912	-11.13	0.8	-0.24
329	SLU 50	13	829	3876	-11.07	0.8	-0.24
329	SLU 51	13	829	3879	-11.03	0.79	-0.24
329	SLU 52	14	891	4171	-11.82	0.86	-0.26
329	SLU 53	14	910	4259	-12.13	0.89	-0.26
329	SLU 54	14	911	4262	-12.1	0.88	-0.26
329	SLU 55	14	904	4231	-11.98	0.86	-0.26
329	SLU 56	14	923	4320	-12.3	0.89	-0.27
329	SLU 57	14	924	4323	-12.27	0.88	-0.26
329	SLU 58	14	917	4288	-12.2	0.88	-0.26
329	SLU 59	14	917	4290	-12.17	0.87	-0.26

Nodo	Cont.	Reazione a traslazione			Reazione a rotazione		
Ind.	N.br.	x	y	z	x	y	z
329	SLU 60	15	928	4342	-12.35	0.91	-0.27
329	SLU 61	15	928	4345	-12.32	0.9	-0.27
329	SLU 62	15	941	4403	-12.52	0.91	-0.27
329	SLU 63	15	941	4406	-12.49	0.9	-0.27
329	SLU 64	14	886	4147	-11.82	0.88	-0.26
329	SLU 65	14	887	4152	-11.77	0.86	-0.26
329	SLU 66	14	906	4240	-12.09	0.89	-0.26
329	SLU 67	14	907	4243	-12.06	0.88	-0.26
329	SLU 68	14	900	4213	-11.94	0.86	-0.26
329	SLU 69	14	920	4301	-12.25	0.89	-0.27
329	SLU 70	14	920	4304	-12.22	0.88	-0.27
329	SLU 71	14	913	4269	-12.15	0.88	-0.26
329	SLU 72	14	913	4272	-12.12	0.87	-0.26
329	SLU 73	15	975	4563	-12.91	0.94	-0.28
329	SLU 74	16	994	4651	-13.22	0.97	-0.29
329	SLU 75	16	995	4654	-13.19	0.96	-0.29
329	SLU 76	16	988	4624	-13.07	0.94	-0.28
329	SLU 77	16	1007	4712	-13.39	0.97	-0.29
329	SLU 78	16	1008	4715	-13.36	0.96	-0.29
329	SLU 79	16	1000	4680	-13.29	0.96	-0.29
329	SLU 80	16	1001	4683	-13.26	0.95	-0.29
329	SLU 81	16	1012	4734	-13.44	0.99	-0.3
329	SLU 82	16	1012	4737	-13.41	0.98	-0.3
329	SLU 83	16	1025	4795	-13.61	0.99	-0.3
329	SLU 84	16	1025	4798	-13.58	0.98	-0.3
329	SLE RA 1	10	663	3104	-8.86	0.66	-0.19
329	SLE RA 2	10	664	3107	-8.82	0.65	-0.19
329	SLE RA 3	11	677	3166	-9.03	0.66	-0.2
329	SLE RA 4	11	677	3168	-9.01	0.66	-0.2
329	SLE RA 5	11	673	3147	-8.93	0.65	-0.19
329	SLE RA 6	11	685	3206	-9.14	0.67	-0.2
329	SLE RA 7	11	686	3208	-9.12	0.66	-0.2
329	SLE RA 8	11	681	3185	-9.08	0.66	-0.2
329	SLE RA 9	11	681	3187	-9.06	0.65	-0.2
329	SLE RA 10	11	722	3381	-9.58	0.7	-0.21
329	SLE RA 11	12	735	3440	-9.79	0.72	-0.21
329	SLE RA 12	12	736	3442	-9.77	0.71	-0.21
329	SLE RA 13	12	731	3422	-9.69	0.7	-0.21
329	SLE RA 14	12	744	3481	-9.9	0.72	-0.22
329	SLE RA 15	12	744	3482	-9.88	0.71	-0.21
329	SLE RA 16	12	739	3459	-9.83	0.71	-0.21
329	SLE RA 17	12	740	3461	-9.81	0.7	-0.21
329	SLE RA 18	12	747	3495	-9.94	0.73	-0.22
329	SLE RA 19	12	747	3497	-9.91	0.72	-0.22
329	SLE RA 20	12	756	3536	-10.05	0.73	-0.22
329	SLE RA 21	12	756	3538	-10.02	0.73	-0.22
329	SLE FR 1	10	663	3104	-8.86	0.66	-0.19
329	SLE FR 2	10	663	3104	-8.85	0.65	-0.19
329	SLE FR 3	10	667	3120	-8.9	0.66	-0.2
329	SLE FR 4	11	688	3222	-9.17	0.68	-0.2
329	SLE FR 5	11	692	3237	-9.22	0.68	-0.2
329	SLE FR 6	11	705	3300	-9.4	0.69	-0.21
329	SLE QP 1	10	663	3104	-8.86	0.66	-0.19
329	SLE QP 2	11	688	3221	-9.18	0.68	-0.2
329	SLD 1	10	515	2510	-7.37	1.77	-0.35
329	SLD 2	10	515	2510	-7.37	1.77	-0.35
329	SLD 3	21	619	2956	-3.46	3.34	-0.7
329	SLD 4	21	619	2956	-3.46	3.34	-0.7
329	SLD 5	-6	478	2331	-14.57	-1.36	0.28
329	SLD 6	-6	478	2331	-14.57	-1.36	0.28
329	SLD 7	30	826	3818	-1.53	3.84	-0.88
329	SLD 8	30	826	3818	-1.53	3.84	-0.88
329	SLD 9	-9	551	2624	-16.83	-2.49	0.48
329	SLD 10	-9	551	2624	-16.83	-2.49	0.48
329	SLD 11	27	899	4111	-3.79	2.72	-0.69
329	SLD 12	27	899	4111	-3.79	2.72	-0.69
329	SLD 13	0	758	3487	-14.9	-1.98	0.3
329	SLD 14	0	758	3487	-14.9	-1.98	0.3
329	SLD 15	11	862	3933	-10.99	-0.42	-0.05
329	SLD 16	11	862	3933	-10.99	-0.42	-0.05
329	SLV 1	10	288	1576	-5.19	3.11	-0.53
329	SLV 2	10	288	1576	-5.19	3.11	-0.53
329	SLV 3	36	534	2632	4.06	6.96	-1.39
329	SLV 4	36	534	2632	4.06	6.96	-1.39
329	SLV 5	-30	194	1126	-22.01	-4.43	1
329	SLV 6	-30	194	1126	-22.01	-4.43	1
329	SLV 7	59	1016	4646	8.82	8.4	-1.86
329	SLV 8	59	1016	4646	8.82	8.4	-1.86
329	SLV 9	-37	361	1796	-27.18	-7.05	1.46
329	SLV 10	-37	361	1796	-27.18	-7.05	1.46
329	SLV 11	51	1182	5317	3.65	5.79	-1.4
329	SLV 12	51	1182	5317	3.65	5.79	-1.4
329	SLV 13	-15	842	3811	-22.42	-5.61	0.99
329	SLV 14	-15	842	3811	-22.42	-5.61	0.99
329	SLV 15	12	1089	4867	-13.17	-1.76	0.13
329	SLV 16	12	1089	4867	-13.17	-1.76	0.13
330	SLU 1	-3	-767	2093	15.26	-0.94	-0.22
330	SLU 2	-2	-724	1984	14.21	-0.89	-0.21
330	SLU 3	-3	-799	2181	15.88	-0.99	-0.23
330	SLU 4	-3	-773	2115	15.25	-0.96	-0.22
330	SLU 5	-2	-750	2056	14.7	-0.93	-0.22

Nodo	Cont.	Reazione a traslazione			Reazione a rotazione		
Ind.	N.br.	x	y	z	x	y	z
330	SLU 6	-3	-825	2252	16.36	-1.03	-0.24
330	SLU 7	-3	-799	2187	15.74	-1	-0.23
330	SLU 8	-3	-819	2237	16.24	-1.02	-0.24
330	SLU 9	-3	-793	2172	15.61	-0.99	-0.23
330	SLU 10	-3	-814	2230	15.98	-1.04	-0.24
330	SLU 11	-4	-889	2426	17.64	-1.14	-0.27
330	SLU 12	-3	-863	2360	17.01	-1.11	-0.26
330	SLU 13	-3	-840	2301	16.47	-1.08	-0.25
330	SLU 14	-4	-915	2498	18.13	-1.18	-0.28
330	SLU 15	-3	-889	2432	17.5	-1.15	-0.27
330	SLU 16	-4	-909	2482	18	-1.17	-0.28
330	SLU 17	-3	-883	2417	17.38	-1.15	-0.27
330	SLU 18	-4	-896	2444	17.79	-1.15	-0.27
330	SLU 19	-3	-870	2378	17.16	-1.12	-0.27
330	SLU 20	-4	-922	2515	18.27	-1.2	-0.28
330	SLU 21	-4	-895	2450	17.64	-1.17	-0.28
330	SLU 22	-3	-858	2341	17.05	-1.08	-0.26
330	SLU 23	-3	-815	2232	16	-1.03	-0.24
330	SLU 24	-4	-890	2428	17.67	-1.13	-0.27
330	SLU 25	-3	-864	2362	17.04	-1.1	-0.26
330	SLU 26	-3	-840	2303	16.49	-1.08	-0.25
330	SLU 27	-4	-916	2500	18.15	-1.17	-0.28
330	SLU 28	-3	-890	2434	17.52	-1.14	-0.27
330	SLU 29	-4	-910	2484	18.03	-1.17	-0.28
330	SLU 30	-3	-884	2419	17.4	-1.14	-0.27
330	SLU 31	-4	-904	2477	17.77	-1.19	-0.28
330	SLU 32	-4	-980	2673	19.43	-1.28	-0.3
330	SLU 33	-4	-954	2608	18.8	-1.25	-0.3
330	SLU 34	-4	-930	2549	18.26	-1.23	-0.29
330	SLU 35	-4	-1005	2745	19.92	-1.32	-0.32
330	SLU 36	-4	-979	2679	19.29	-1.3	-0.31
330	SLU 37	-4	-1000	2729	19.79	-1.32	-0.31
330	SLU 38	-4	-973	2664	19.17	-1.29	-0.31
330	SLU 39	-4	-986	2691	19.58	-1.3	-0.31
330	SLU 40	-4	-960	2625	18.95	-1.27	-0.3
330	SLU 41	-4	-1012	2763	20.06	-1.34	-0.32
330	SLU 42	-4	-986	2697	19.43	-1.31	-0.31
330	SLU 43	-4	-967	2637	19.23	-1.17	-0.28
330	SLU 44	-3	-923	2528	18.18	-1.12	-0.26
330	SLU 45	-4	-998	2724	19.84	-1.22	-0.29
330	SLU 46	-3	-972	2658	19.21	-1.19	-0.28
330	SLU 47	-3	-949	2599	18.67	-1.16	-0.27
330	SLU 48	-4	-1024	2796	20.33	-1.26	-0.3
330	SLU 49	-4	-998	2730	19.7	-1.23	-0.29
330	SLU 50	-4	-1018	2780	20.2	-1.25	-0.3
330	SLU 51	-3	-992	2715	19.57	-1.23	-0.29
330	SLU 52	-4	-1013	2773	19.94	-1.27	-0.3
330	SLU 53	-4	-1088	2969	21.61	-1.37	-0.32
330	SLU 54	-4	-1062	2904	20.98	-1.34	-0.32
330	SLU 55	-4	-1039	2845	20.43	-1.31	-0.31
330	SLU 56	-4	-1114	3041	22.1	-1.41	-0.33
330	SLU 57	-4	-1088	2975	21.47	-1.38	-0.33
330	SLU 58	-4	-1108	3025	21.97	-1.41	-0.33
330	SLU 59	-4	-1082	2960	21.34	-1.38	-0.32
330	SLU 60	-4	-1095	2987	21.75	-1.39	-0.33
330	SLU 61	-4	-1069	2921	21.12	-1.36	-0.32
330	SLU 62	-5	-1121	3059	22.24	-1.43	-0.34
330	SLU 63	-4	-1095	2993	21.61	-1.4	-0.33
330	SLU 64	-4	-1057	2884	21.02	-1.31	-0.31
330	SLU 65	-4	-1014	2775	19.97	-1.27	-0.3
330	SLU 66	-4	-1089	2971	21.63	-1.36	-0.32
330	SLU 67	-4	-1063	2906	21	-1.33	-0.31
330	SLU 68	-4	-1040	2847	20.45	-1.31	-0.31
330	SLU 69	-4	-1115	3043	22.12	-1.41	-0.33
330	SLU 70	-4	-1089	2978	21.49	-1.38	-0.32
330	SLU 71	-4	-1109	3027	21.99	-1.4	-0.33
330	SLU 72	-4	-1083	2962	21.36	-1.37	-0.32
330	SLU 73	-4	-1104	3020	21.73	-1.42	-0.33
330	SLU 74	-5	-1179	3216	23.4	-1.51	-0.36
330	SLU 75	-5	-1153	3151	22.77	-1.48	-0.35
330	SLU 76	-4	-1129	3092	22.22	-1.46	-0.34
330	SLU 77	-5	-1205	3288	23.89	-1.56	-0.37
330	SLU 78	-5	-1179	3223	23.26	-1.53	-0.36
330	SLU 79	-5	-1199	3273	23.76	-1.55	-0.37
330	SLU 80	-5	-1173	3207	23.13	-1.52	-0.36
330	SLU 81	-5	-1186	3234	23.54	-1.53	-0.36
330	SLU 82	-5	-1160	3169	22.91	-1.5	-0.36
330	SLU 83	-5	-1211	3306	24.03	-1.57	-0.37
330	SLU 84	-5	-1185	3240	23.4	-1.54	-0.37
330	SLE RA 1	-3	-793	2164	15.77	-0.98	-0.23
330	SLE RA 2	-3	-764	2091	15.07	-0.95	-0.22
330	SLE RA 3	-3	-814	2222	16.18	-1.01	-0.24
330	SLE RA 4	-3	-797	2179	15.76	-0.99	-0.23
330	SLE RA 5	-3	-782	2139	15.4	-0.98	-0.23
330	SLE RA 6	-3	-832	2270	16.51	-1.04	-0.25
330	SLE RA 7	-3	-814	2226	16.09	-1.02	-0.24
330	SLE RA 8	-3	-828	2260	16.42	-1.04	-0.25
330	SLE RA 9	-3	-810	2216	16	-1.02	-0.24
330	SLE RA 10	-3	-824	2255	16.25	-1.05	-0.25
330	SLE RA 11	-4	-874	2386	17.36	-1.11	-0.26
330	SLE RA 12	-3	-857	2342	16.94	-1.09	-0.26

Nodo	Cont.	Reazione a traslazione			Reazione a rotazione		
Ind.	N.br.	x	y	z	x	y	z
330	SLE RA 13	-3	-841	2303	16.58	-1.08	-0.25
330	SLE RA 14	-4	-892	2433	17.69	-1.14	-0.27
330	SLE RA 15	-3	-874	2390	17.27	-1.12	-0.26
330	SLE RA 16	-4	-888	2423	17.6	-1.14	-0.27
330	SLE RA 17	-3	-870	2380	17.18	-1.12	-0.26
330	SLE RA 18	-4	-879	2397	17.46	-1.12	-0.27
330	SLE RA 19	-3	-862	2354	17.04	-1.1	-0.26
330	SLE RA 20	-4	-896	2445	17.78	-1.15	-0.27
330	SLE RA 21	-3	-879	2402	17.36	-1.13	-0.27
330	SLE FR 1	-3	-793	2164	15.77	-0.98	-0.23
330	SLE FR 2	-3	-788	2149	15.63	-0.97	-0.23
330	SLE FR 3	-3	-800	2183	15.9	-0.99	-0.23
330	SLE FR 4	-3	-813	2219	16.14	-1.02	-0.24
330	SLE FR 5	-3	-826	2253	16.41	-1.03	-0.24
330	SLE FR 6	-3	-836	2281	16.61	-1.05	-0.25
330	SLE QP 1	-3	-793	2164	15.77	-0.98	-0.23
330	SLE QP 2	-3	-819	2234	16.28	-1.02	-0.24
330	SLD 1	-6	-339	877	7.29	0.78	0.25
330	SLD 2	-6	-339	877	7.29	0.78	0.25
330	SLD 3	-19	-617	1608	13.55	-0.27	-0.07
330	SLD 4	-19	-617	1608	13.55	-0.27	-0.07
330	SLD 5	14	-254	719	4.08	1.1	0.38
330	SLD 6	14	-254	719	4.08	1.1	0.38
330	SLD 7	-27	-1180	3154	24.96	-2.38	-0.66
330	SLD 8	-27	-1180	3154	24.96	-2.38	-0.66
330	SLD 9	20	-458	1314	7.59	0.33	0.18
330	SLD 10	20	-458	1314	7.59	0.33	0.18
330	SLD 11	-21	-1385	3749	28.48	-3.14	-0.86
330	SLD 12	-21	-1385	3749	28.48	-3.14	-0.86
330	SLD 13	12	-1021	2860	19	-1.78	-0.42
330	SLD 14	12	-1021	2860	19	-1.78	-0.42
330	SLD 15	0	-1299	3591	25.27	-2.82	-0.73
330	SLD 16	0	-1299	3591	25.27	-2.82	-0.73
330	SLV 1	-10	280	-869	-4.35	3.27	0.94
330	SLV 2	-10	280	-869	-4.35	3.27	0.94
330	SLV 3	-42	-369	839	10.27	0.61	0.14
330	SLV 4	-42	-369	839	10.27	0.61	0.14
330	SLV 5	42	496	-1288	-12.09	4.3	1.32
330	SLV 6	42	496	-1288	-12.09	4.3	1.32
330	SLV 7	-63	-1669	4406	36.66	-4.57	-1.34
330	SLV 8	-63	-1669	4406	36.66	-4.57	-1.34
330	SLV 9	56	31	62	-4.1	2.52	0.86
330	SLV 10	56	31	62	-4.1	2.52	0.86
330	SLV 11	-49	-2134	5756	44.65	-6.35	-1.81
330	SLV 12	-49	-2134	5756	44.65	-6.35	-1.81
330	SLV 13	36	-1269	3629	22.28	-2.66	-0.62
330	SLV 14	36	-1269	3629	22.28	-2.66	-0.62
330	SLV 15	4	-1918	5337	36.91	-5.32	-1.42
330	SLV 16	4	-1918	5337	36.91	-5.32	-1.42
331	SLU 1	-1	-648	3098	42.19	0.98	0
331	SLU 2	-1	-648	3099	42.23	0.98	0
331	SLU 3	-1	-665	3179	43.43	1.01	0
331	SLU 4	-1	-665	3180	43.45	1.01	0
331	SLU 5	-1	-656	3148	42.91	0.99	0
331	SLU 6	-1	-673	3227	44.11	1.02	0
331	SLU 7	-1	-673	3228	44.13	1.02	0
331	SLU 8	-1	-664	3194	43.55	1.01	0
331	SLU 9	-1	-664	3195	43.57	1.01	0
331	SLU 10	-1	-737	3536	48.17	1.15	0
331	SLU 11	-1	-753	3615	49.37	1.18	0
331	SLU 12	-1	-753	3616	49.39	1.18	0
331	SLU 13	-1	-745	3584	48.85	1.16	0
331	SLU 14	-1	-761	3663	50.05	1.19	0
331	SLU 15	-1	-761	3664	50.07	1.19	0
331	SLU 16	-1	-752	3631	49.49	1.18	0
331	SLU 17	-1	-752	3632	49.51	1.18	0
331	SLU 18	-1	-774	3721	50.68	1.22	0
331	SLU 19	-1	-774	3722	50.7	1.22	0
331	SLU 20	-1	-782	3769	51.36	1.24	0
331	SLU 21	-1	-782	3770	51.38	1.24	0
331	SLU 22	-1	-738	3511	48.15	1.15	0
331	SLU 23	-1	-739	3513	48.19	1.15	0
331	SLU 24	-1	-755	3592	49.39	1.18	0
331	SLU 25	-1	-755	3593	49.41	1.18	0
331	SLU 26	-1	-746	3561	48.87	1.16	0
331	SLU 27	-1	-763	3640	50.06	1.19	0
331	SLU 28	-1	-763	3642	50.09	1.19	0
331	SLU 29	-1	-754	3608	49.5	1.18	0
331	SLU 30	-1	-754	3609	49.53	1.18	0
331	SLU 31	-1	-827	3949	54.13	1.32	0
331	SLU 32	-1	-843	4028	55.33	1.35	0
331	SLU 33	-1	-843	4030	55.35	1.35	0
331	SLU 34	-1	-835	3998	54.81	1.33	0
331	SLU 35	-1	-851	4077	56.01	1.36	0
331	SLU 36	-1	-851	4078	56.03	1.36	0
331	SLU 37	-1	-842	4044	55.45	1.35	0
331	SLU 38	-1	-842	4045	55.47	1.35	0
331	SLU 39	-1	-864	4134	56.64	1.39	0
331	SLU 40	-1	-864	4136	56.66	1.39	0
331	SLU 41	-1	-872	4183	57.31	1.41	0
331	SLU 42	-1	-872	4184	57.34	1.41	0

Nodo	Cont.	Reazione a traslazione			Reazione a rotazione		
Ind.	N.br.	x	y	z	x	y	z
331	SLU 43	-1	-811	3885	52.8	1.22	0
331	SLU 44	-1	-812	3887	52.84	1.22	0
331	SLU 45	-1	-828	3966	54.04	1.25	0
331	SLU 46	-1	-828	3967	54.07	1.24	0
331	SLU 47	-1	-820	3935	53.52	1.23	0
331	SLU 48	-1	-836	4014	54.72	1.26	0
331	SLU 49	-1	-836	4016	54.74	1.26	0
331	SLU 50	-1	-827	3982	54.16	1.24	0
331	SLU 51	-1	-828	3983	54.18	1.24	0
331	SLU 52	-1	-900	4323	58.79	1.39	0
331	SLU 53	-1	-916	4402	59.98	1.42	0
331	SLU 54	-1	-917	4403	60.01	1.41	0
331	SLU 55	-1	-908	4372	59.46	1.4	0
331	SLU 56	-1	-924	4451	60.66	1.43	0
331	SLU 57	-1	-925	4452	60.69	1.43	0
331	SLU 58	-1	-915	4418	60.1	1.41	0
331	SLU 59	-1	-916	4419	60.13	1.41	0
331	SLU 60	-1	-937	4508	61.29	1.46	0
331	SLU 61	-1	-938	4510	61.32	1.46	0
331	SLU 62	-1	-945	4557	61.97	1.47	0
331	SLU 63	-1	-946	4558	61.99	1.47	0
331	SLU 64	-1	-901	4299	58.76	1.39	0
331	SLU 65	-1	-902	4301	58.8	1.39	0
331	SLU 66	-1	-918	4380	60	1.42	0
331	SLU 67	-1	-919	4381	60.02	1.41	0
331	SLU 68	-1	-910	4349	59.48	1.4	0
331	SLU 69	-1	-926	4428	60.68	1.43	0
331	SLU 70	-1	-926	4429	60.7	1.43	0
331	SLU 71	-1	-917	4395	60.12	1.41	0
331	SLU 72	-1	-918	4397	60.14	1.41	0
331	SLU 73	-1	-990	4737	64.74	1.56	0
331	SLU 74	-2	-1006	4816	65.94	1.59	0
331	SLU 75	-2	-1007	4817	65.97	1.58	0
331	SLU 76	-1	-998	4785	65.42	1.57	0
331	SLU 77	-2	-1014	4864	66.62	1.6	0
331	SLU 78	-2	-1015	4865	66.65	1.6	0
331	SLU 79	-1	-1005	4832	66.06	1.58	0
331	SLU 80	-1	-1006	4833	66.09	1.58	0
331	SLU 81	-2	-1027	4922	67.25	1.63	0
331	SLU 82	-2	-1028	4923	67.27	1.63	0
331	SLU 83	-2	-1035	4970	67.93	1.64	0
331	SLU 84	-2	-1036	4971	67.95	1.64	0
331	SLE RA 1	-1	-674	3216	43.89	1.03	0
331	SLE RA 2	-1	-674	3217	43.92	1.03	0
331	SLE RA 3	-1	-685	3270	44.72	1.05	0
331	SLE RA 4	-1	-685	3270	44.73	1.05	0
331	SLE RA 5	-1	-679	3249	44.37	1.04	0
331	SLE RA 6	-1	-690	3302	45.17	1.06	0
331	SLE RA 7	-1	-690	3303	45.19	1.06	0
331	SLE RA 8	-1	-684	3280	44.8	1.05	0
331	SLE RA 9	-1	-684	3281	44.81	1.05	0
331	SLE RA 10	-1	-733	3508	47.88	1.14	0
331	SLE RA 11	-1	-744	3561	48.68	1.16	0
331	SLE RA 12	-1	-744	3561	48.7	1.16	0
331	SLE RA 13	-1	-738	3540	48.33	1.15	0
331	SLE RA 14	-1	-749	3593	49.13	1.17	0
331	SLE RA 15	-1	-749	3594	49.15	1.17	0
331	SLE RA 16	-1	-743	3571	48.76	1.16	0
331	SLE RA 17	-1	-743	3572	48.77	1.16	0
331	SLE RA 18	-1	-758	3631	49.55	1.19	0
331	SLE RA 19	-1	-758	3632	49.57	1.19	0
331	SLE RA 20	-1	-763	3664	50	1.2	0
331	SLE RA 21	-1	-763	3664	50.02	1.2	0
331	SLE FR 1	-1	-674	3216	43.89	1.03	0
331	SLE FR 2	-1	-674	3216	43.9	1.03	0
331	SLE FR 3	-1	-676	3229	44.07	1.03	0
331	SLE FR 4	-1	-699	3341	45.59	1.08	0
331	SLE FR 5	-1	-701	3353	45.77	1.08	0
331	SLE FR 6	-1	-716	3424	46.72	1.11	0
331	SLE QP 1	-1	-674	3216	43.89	1.03	0
331	SLE QP 2	-1	-699	3340	45.59	1.08	0
331	SLD 1	1	-636	3318	42.58	1.5	0
331	SLD 2	1	-636	3318	42.58	1.5	0
331	SLD 3	0	-1024	3683	61.49	1.81	0
331	SLD 4	0	-1024	3683	61.49	1.81	0
331	SLD 5	1	-91	2781	16.01	0.74	0
331	SLD 6	1	-91	2781	16.01	0.74	0
331	SLD 7	-2	-1385	3996	79.04	1.77	0
331	SLD 8	-2	-1385	3996	79.04	1.77	0
331	SLD 9	0	-12	2684	12.14	0.39	0
331	SLD 10	0	-12	2684	12.14	0.39	0
331	SLD 11	-3	-1306	3900	75.17	1.42	0
331	SLD 12	-3	-1306	3900	75.17	1.42	0
331	SLD 13	-2	-373	2998	29.68	0.35	0.01
331	SLD 14	-2	-373	2998	29.68	0.35	0.01
331	SLD 15	-3	-762	3363	48.59	0.65	0
331	SLD 16	-3	-762	3363	48.59	0.65	0
331	SLV 1	3	-543	3277	38.06	2.05	-0.01
331	SLV 2	3	-543	3277	38.06	2.05	-0.01
331	SLV 3	2	-1464	4148	82.99	2.8	-0.01
331	SLV 4	2	-1464	4148	82.99	2.8	-0.01

Nodo	Cont.	Reazione a traslazione			Reazione a rotazione		
Ind.	N.br.	x	y	z	x	y	z
331	SLV 5	3	744	2001	-24.81	0.22	0
331	SLV 6	3	744	2001	-24.81	0.22	0
331	SLV 7	-3	-2325	4903	124.95	2.74	-0.01
331	SLV 8	-3	-2325	4903	124.95	2.74	-0.01
331	SLV 9	1	927	1777	-33.77	-0.59	0.01
331	SLV 10	1	927	1777	-33.77	-0.59	0.01
331	SLV 11	-5	-2142	4680	115.98	1.93	0
331	SLV 12	-5	-2142	4680	115.98	1.93	0
331	SLV 13	-4	66	2533	8.19	-0.65	0.01
331	SLV 14	-4	66	2533	8.19	-0.65	0.01
331	SLV 15	-5	-855	3404	53.11	0.11	0.01
331	SLV 16	-5	-855	3404	53.11	0.11	0.01
332	SLU 1	26	62	5230	2.61	3.12	0.09
332	SLU 2	26	57	5237	2.87	3.13	0.09
332	SLU 3	27	72	5350	2.36	3.25	0.1
332	SLU 4	27	70	5354	2.51	3.26	0.1
332	SLU 5	27	69	5297	2.52	3.23	0.09
332	SLU 6	27	84	5409	2.02	3.35	0.1
332	SLU 7	28	81	5414	2.17	3.36	0.1
332	SLU 8	27	85	5349	1.93	3.32	0.1
332	SLU 9	27	82	5354	2.08	3.32	0.1
332	SLU 10	30	73	5997	3.02	3.57	0.1
332	SLU 11	30	89	6109	2.52	3.69	0.11
332	SLU 12	31	86	6114	2.67	3.7	0.11
332	SLU 13	30	85	6057	2.68	3.67	0.11
332	SLU 14	31	100	6169	2.18	3.79	0.11
332	SLU 15	31	97	6174	2.33	3.8	0.11
332	SLU 16	31	101	6109	2.08	3.76	0.11
332	SLU 17	31	98	6114	2.24	3.77	0.11
332	SLU 18	31	85	6315	2.84	3.75	0.11
332	SLU 19	31	82	6320	2.99	3.76	0.11
332	SLU 20	32	96	6375	2.49	3.85	0.11
332	SLU 21	32	94	6379	2.65	3.86	0.11
332	SLU 22	29	77	5932	2.76	3.55	0.1
332	SLU 23	30	72	5940	3.01	3.56	0.1
332	SLU 24	30	87	6053	2.51	3.68	0.11
332	SLU 25	30	85	6057	2.66	3.69	0.11
332	SLU 26	30	84	6000	2.67	3.66	0.11
332	SLU 27	31	99	6112	2.16	3.78	0.11
332	SLU 28	31	96	6117	2.32	3.79	0.11
332	SLU 29	31	100	6052	2.07	3.75	0.11
332	SLU 30	31	97	6057	2.23	3.75	0.11
332	SLU 31	33	88	6700	3.17	4	0.12
332	SLU 32	34	104	6812	2.67	4.12	0.12
332	SLU 33	34	101	6817	2.82	4.13	0.12
332	SLU 34	34	100	6760	2.83	4.1	0.12
332	SLU 35	34	115	6872	2.32	4.22	0.12
332	SLU 36	35	112	6877	2.48	4.23	0.12
332	SLU 37	34	116	6812	2.23	4.19	0.12
332	SLU 38	34	113	6817	2.38	4.2	0.12
332	SLU 39	35	100	7018	2.98	4.18	0.12
332	SLU 40	35	97	7022	3.14	4.19	0.12
332	SLU 41	35	111	7078	2.64	4.28	0.12
332	SLU 42	35	109	7082	2.79	4.29	0.12
332	SLU 43	33	75	6557	3.34	3.91	0.12
332	SLU 44	33	70	6565	3.6	3.92	0.12
332	SLU 45	34	86	6677	3.09	4.04	0.12
332	SLU 46	34	83	6682	3.25	4.05	0.12
332	SLU 47	33	82	6625	3.26	4.02	0.12
332	SLU 48	34	97	6737	2.75	4.14	0.12
332	SLU 49	34	95	6742	2.9	4.15	0.12
332	SLU 50	34	98	6677	2.66	4.11	0.12
332	SLU 51	34	95	6682	2.81	4.11	0.12
332	SLU 52	36	87	7325	3.76	4.36	0.13
332	SLU 53	37	102	7437	3.25	4.48	0.13
332	SLU 54	37	99	7442	3.4	4.49	0.13
332	SLU 55	37	98	7385	3.41	4.46	0.13
332	SLU 56	38	113	7497	2.91	4.58	0.13
332	SLU 57	38	111	7502	3.06	4.59	0.13
332	SLU 58	37	114	7437	2.82	4.55	0.13
332	SLU 59	37	111	7441	2.97	4.56	0.13
332	SLU 60	38	98	7643	3.57	4.54	0.13
332	SLU 61	38	95	7647	3.72	4.55	0.13
332	SLU 62	38	110	7703	3.23	4.64	0.14
332	SLU 63	38	107	7707	3.38	4.65	0.14
332	SLU 64	36	90	7260	3.49	4.34	0.13
332	SLU 65	36	85	7268	3.75	4.35	0.13
332	SLU 66	37	101	7380	3.24	4.47	0.13
332	SLU 67	37	98	7385	3.39	4.48	0.13
332	SLU 68	37	97	7328	3.4	4.45	0.13
332	SLU 69	38	112	7440	2.9	4.57	0.13
332	SLU 70	38	110	7445	3.05	4.57	0.13
332	SLU 71	37	113	7380	2.81	4.54	0.13
332	SLU 72	37	110	7385	2.96	4.54	0.13
332	SLU 73	40	102	8028	3.9	4.79	0.14
332	SLU 74	41	117	8140	3.4	4.91	0.14
332	SLU 75	41	114	8145	3.55	4.92	0.14
332	SLU 76	40	113	8088	3.56	4.89	0.14
332	SLU 77	41	128	8200	3.06	5.01	0.14
332	SLU 78	41	126	8205	3.21	5.02	0.14
332	SLU 79	41	129	8140	2.96	4.98	0.14

Nodo	Cont.	Reazione a traslazione			Reazione a rotazione		
Ind.	N.br.	x	y	z	x	y	z
332	SLU 80	41	126	8144	3.12	4.99	0.14
332	SLU 81	41	113	8346	3.72	4.97	0.14
332	SLU 82	41	110	8350	3.87	4.98	0.14
332	SLU 83	42	125	8406	3.37	5.07	0.15
332	SLU 84	42	122	8410	3.53	5.08	0.15
332	SLE RA 1	27	66	5430	2.65	3.24	0.1
332	SLE RA 2	27	63	5436	2.82	3.25	0.1
332	SLE RA 3	28	73	5510	2.49	3.33	0.1
332	SLE RA 4	28	71	5514	2.59	3.33	0.1
332	SLE RA 5	27	71	5475	2.59	3.32	0.1
332	SLE RA 6	28	81	5550	2.26	3.4	0.1
332	SLE RA 7	28	79	5553	2.36	3.4	0.1
332	SLE RA 8	28	81	5510	2.2	3.38	0.1
332	SLE RA 9	28	79	5513	2.3	3.38	0.1
332	SLE RA 10	29	74	5942	2.93	3.54	0.1
332	SLE RA 11	30	84	6017	2.59	3.63	0.11
332	SLE RA 12	30	82	6020	2.69	3.63	0.11
332	SLE RA 13	30	81	5982	2.7	3.61	0.11
332	SLE RA 14	30	92	6057	2.36	3.69	0.11
332	SLE RA 15	30	90	6060	2.46	3.7	0.11
332	SLE RA 16	30	92	6017	2.3	3.67	0.11
332	SLE RA 17	30	90	6020	2.4	3.67	0.11
332	SLE RA 18	30	81	6154	2.8	3.66	0.11
332	SLE RA 19	30	80	6157	2.91	3.67	0.11
332	SLE RA 20	31	89	6194	2.58	3.73	0.11
332	SLE RA 21	31	87	6197	2.68	3.73	0.11
332	SLE FR 1	27	66	5430	2.65	3.24	0.1
332	SLE FR 2	27	65	5431	2.69	3.24	0.1
332	SLE FR 3	27	69	5446	2.56	3.27	0.1
332	SLE FR 4	28	70	5648	2.73	3.37	0.1
332	SLE FR 5	28	74	5663	2.61	3.4	0.1
332	SLE FR 6	29	74	5792	2.73	3.45	0.1
332	SLE QP 1	27	66	5430	2.65	3.24	0.1
332	SLE QP 2	28	71	5647	2.7	3.37	0.1
332	SLD 1	35	945	5725	-34.8	5.61	0.13
332	SLD 2	35	945	5725	-34.8	5.61	0.13
332	SLD 3	45	595	6527	-13.39	6.95	0.16
332	SLD 4	45	595	6527	-13.39	6.95	0.16
332	SLD 5	14	864	4454	-41.03	2.01	0.05
332	SLD 6	14	864	4454	-41.03	2.01	0.05
332	SLD 7	49	-303	7128	30.35	6.48	0.17
332	SLD 8	49	-303	7128	30.35	6.48	0.17
332	SLD 9	7	445	4167	-24.96	0.26	0.02
332	SLD 10	7	445	4167	-24.96	0.26	0.02
332	SLD 11	42	-723	6841	46.43	4.73	0.15
332	SLD 12	42	-723	6841	46.43	4.73	0.15
332	SLD 13	11	-454	4768	18.78	-0.21	0.04
332	SLD 14	11	-454	4768	18.78	-0.21	0.04
332	SLD 15	21	-804	5570	40.2	1.13	0.07
332	SLD 16	21	-804	5570	40.2	1.13	0.07
332	SLV 1	43	2072	5799	-83.58	8.39	0.16
332	SLV 2	43	2072	5799	-83.58	8.39	0.16
332	SLV 3	67	1250	7696	-33.16	11.59	0.25
332	SLV 4	67	1250	7696	-33.16	11.59	0.25
332	SLV 5	-5	1918	2816	-99.66	0.03	-0.02
332	SLV 6	-5	1918	2816	-99.66	0.03	-0.02
332	SLV 7	77	-822	9139	68.41	10.69	0.28
332	SLV 8	77	-822	9139	68.41	10.69	0.28
332	SLV 9	-21	963	2156	-63.02	-3.95	-0.08
332	SLV 10	-21	963	2156	-63.02	-3.95	-0.08
332	SLV 11	61	-1777	8479	105.06	6.71	0.22
332	SLV 12	61	-1777	8479	105.06	6.71	0.22
332	SLV 13	-11	-1109	3599	38.56	-4.85	-0.05
332	SLV 14	-11	-1109	3599	38.56	-4.85	-0.05
332	SLV 15	13	-1931	5496	88.98	-1.65	0.04
332	SLV 16	13	-1931	5496	88.98	-1.65	0.04
334	SLU 1	-2	-8	5887	4.5	-1.32	0.01
334	SLU 2	-2	-7	5917	4.61	-1.35	0.01
334	SLU 3	-2	-8	6076	4.66	-1.37	0.01
334	SLU 4	-2	-7	6094	4.73	-1.39	0.01
334	SLU 5	-2	-7	6042	4.71	-1.39	0.01
334	SLU 6	-2	-7	6201	4.76	-1.42	0.01
334	SLU 7	-2	-7	6219	4.82	-1.43	0.01
334	SLU 8	-2	-7	6137	4.69	-1.4	0.01
334	SLU 9	-2	-7	6155	4.76	-1.42	0.01
334	SLU 10	-3	-8	6721	5.11	-1.59	0.01
334	SLU 11	-3	-9	6880	5.16	-1.61	0.01
334	SLU 12	-3	-8	6898	5.23	-1.63	0.01
334	SLU 13	-3	-8	6846	5.21	-1.63	0.01
334	SLU 14	-3	-8	7005	5.26	-1.66	0.01
334	SLU 15	-3	-8	7023	5.32	-1.68	0.01
334	SLU 16	-3	-8	6942	5.19	-1.65	0.01
334	SLU 17	-3	-8	6959	5.26	-1.66	0.01
334	SLU 18	-3	-10	7036	5.21	-1.66	0.01
334	SLU 19	-3	-9	7054	5.28	-1.68	0.01
334	SLU 20	-3	-9	7161	5.31	-1.71	0.01
334	SLU 21	-3	-9	7179	5.38	-1.72	0.01
334	SLU 22	-3	-9	6662	5.09	-1.54	0.01
334	SLU 23	-3	-8	6691	5.2	-1.57	0.01
334	SLU 24	-3	-9	6850	5.25	-1.59	0.01
334	SLU 25	-3	-8	6868	5.31	-1.61	0.01

Nodo	Cont.	Reazione a traslazione			Reazione a rotazione		
Ind.	N.br.	x	y	z	x	y	z
334	SLU 26	-3	-8	6816	5.29	-1.61	0.01
334	SLU 27	-3	-9	6975	5.34	-1.63	0.01
334	SLU 28	-3	-8	6993	5.41	-1.65	0.01
334	SLU 29	-3	-8	6912	5.28	-1.62	0.01
334	SLU 30	-3	-8	6930	5.35	-1.64	0.01
334	SLU 31	-3	-9	7496	5.7	-1.81	0.01
334	SLU 32	-3	-10	7655	5.75	-1.83	0.01
334	SLU 33	-3	-9	7672	5.81	-1.85	0.01
334	SLU 34	-3	-9	7621	5.79	-1.85	0.01
334	SLU 35	-3	-10	7780	5.84	-1.88	0.01
334	SLU 36	-3	-9	7797	5.91	-1.89	0.01
334	SLU 37	-3	-9	7716	5.78	-1.86	0.01
334	SLU 38	-3	-9	7734	5.85	-1.88	0.01
334	SLU 39	-3	-11	7811	5.8	-1.88	0.01
334	SLU 40	-3	-10	7828	5.87	-1.9	0.01
334	SLU 41	-3	-10	7936	5.9	-1.92	0.01
334	SLU 42	-3	-10	7953	5.96	-1.94	0.01
334	SLU 43	-3	-10	7388	5.65	-1.64	0.01
334	SLU 44	-3	-9	7417	5.76	-1.67	0.01
334	SLU 45	-3	-10	7576	5.81	-1.69	0.01
334	SLU 46	-3	-9	7594	5.87	-1.71	0.01
334	SLU 47	-3	-9	7542	5.85	-1.71	0.01
334	SLU 48	-3	-10	7701	5.9	-1.74	0.01
334	SLU 49	-3	-9	7719	5.97	-1.75	0.01
334	SLU 50	-3	-9	7638	5.84	-1.72	0.01
334	SLU 51	-3	-9	7656	5.91	-1.74	0.01
334	SLU 52	-3	-10	8222	6.26	-1.91	0.01
334	SLU 53	-3	-11	8381	6.31	-1.93	0.01
334	SLU 54	-3	-10	8398	6.37	-1.95	0.01
334	SLU 55	-3	-10	8347	6.35	-1.95	0.01
334	SLU 56	-3	-11	8506	6.4	-1.98	0.01
334	SLU 57	-3	-10	8523	6.47	-2	0.01
334	SLU 58	-3	-10	8442	6.34	-1.97	0.01
334	SLU 59	-3	-10	8460	6.41	-1.98	0.01
334	SLU 60	-3	-12	8537	6.36	-1.98	0.01
334	SLU 61	-3	-11	8555	6.43	-2	0.01
334	SLU 62	-3	-11	8662	6.46	-2.03	0.01
334	SLU 63	-3	-11	8680	6.52	-2.04	0.01
334	SLU 64	-3	-12	8162	6.23	-1.86	0.01
334	SLU 65	-3	-10	8192	6.34	-1.89	0.01
334	SLU 66	-3	-11	8351	6.39	-1.91	0.01
334	SLU 67	-3	-11	8369	6.46	-1.93	0.01
334	SLU 68	-3	-10	8317	6.44	-1.93	0.01
334	SLU 69	-3	-11	8476	6.49	-1.95	0.01
334	SLU 70	-3	-10	8494	6.56	-1.97	0.01
334	SLU 71	-3	-10	8413	6.43	-1.94	0.01
334	SLU 72	-3	-10	8430	6.49	-1.96	0.01
334	SLU 73	-4	-11	8996	6.84	-2.13	0.01
334	SLU 74	-4	-12	9155	6.89	-2.15	0.01
334	SLU 75	-4	-12	9173	6.96	-2.17	0.01
334	SLU 76	-4	-11	9121	6.94	-2.17	0.01
334	SLU 77	-4	-12	9280	6.99	-2.2	0.01
334	SLU 78	-4	-11	9298	7.06	-2.21	0.01
334	SLU 79	-4	-11	9217	6.93	-2.18	0.01
334	SLU 80	-4	-11	9234	6.99	-2.2	0.01
334	SLU 81	-4	-13	9311	6.95	-2.2	0.02
334	SLU 82	-4	-12	9329	7.01	-2.22	0.02
334	SLU 83	-4	-12	9436	7.05	-2.24	0.02
334	SLU 84	-4	-12	9454	7.11	-2.26	0.02
334	SLE RA 1	-2	-9	6109	4.67	-1.38	0.01
334	SLE RA 2	-2	-8	6128	4.74	-1.4	0.01
334	SLE RA 3	-2	-8	6234	4.77	-1.42	0.01
334	SLE RA 4	-2	-8	6246	4.82	-1.43	0.01
334	SLE RA 5	-2	-8	6212	4.8	-1.43	0.01
334	SLE RA 6	-2	-8	6318	4.84	-1.45	0.01
334	SLE RA 7	-2	-8	6329	4.88	-1.46	0.01
334	SLE RA 8	-2	-8	6275	4.8	-1.44	0.01
334	SLE RA 9	-2	-7	6287	4.84	-1.45	0.01
334	SLE RA 10	-3	-9	6664	5.07	-1.56	0.01
334	SLE RA 11	-3	-9	6770	5.11	-1.58	0.01
334	SLE RA 12	-3	-9	6782	5.15	-1.59	0.01
334	SLE RA 13	-3	-8	6748	5.14	-1.59	0.01
334	SLE RA 14	-3	-9	6854	5.17	-1.61	0.01
334	SLE RA 15	-3	-8	6866	5.22	-1.62	0.01
334	SLE RA 16	-3	-9	6811	5.13	-1.6	0.01
334	SLE RA 17	-3	-8	6823	5.17	-1.61	0.01
334	SLE RA 18	-3	-10	6875	5.14	-1.61	0.01
334	SLE RA 19	-3	-9	6886	5.19	-1.62	0.01
334	SLE RA 20	-3	-9	6958	5.21	-1.64	0.01
334	SLE RA 21	-3	-9	6970	5.25	-1.65	0.01
334	SLE FR 1	-2	-9	6109	4.67	-1.38	0.01
334	SLE FR 2	-2	-9	6113	4.68	-1.38	0.01
334	SLE FR 3	-2	-9	6142	4.69	-1.39	0.01
334	SLE FR 4	-2	-9	6342	4.82	-1.45	0.01
334	SLE FR 5	-2	-9	6372	4.83	-1.46	0.01
334	SLE FR 6	-3	-9	6492	4.9	-1.49	0.01
334	SLE QP 1	-2	-9	6109	4.67	-1.38	0.01
334	SLE QP 2	-2	-9	6338	4.81	-1.45	0.01
334	SLD 1	6	-51	6102	7.52	3.1	0.01
334	SLD 2	6	-51	6102	7.52	3.1	0.01
334	SLD 3	4	-18	7216	17.19	2.19	0.02

Nodo	Cont.	Reazione a traslazione			Reazione a rotazione		
Ind.	N.br.	x	y	z	x	y	z
334	SLD 4	4	-18	7216	17.19	2.19	0.02
334	SLD 5	2	-72	4577	-9.04	1.3	0
334	SLD 6	2	-72	4577	-9.04	1.3	0
334	SLD 7	-3	39	8292	23.18	-1.74	0.03
334	SLD 8	-3	39	8292	23.18	-1.74	0.03
334	SLD 9	-2	-56	4385	-13.57	-1.15	-0.01
334	SLD 10	-2	-56	4385	-13.57	-1.15	-0.01
334	SLD 11	-7	54	8099	18.66	-4.2	0.02
334	SLD 12	-7	54	8099	18.66	-4.2	0.02
334	SLD 13	-9	0	5461	-7.57	-5.09	0
334	SLD 14	-9	0	5461	-7.57	-5.09	0
334	SLD 15	-10	33	6575	2.1	-6	0.01
334	SLD 16	-10	33	6575	2.1	-6	0.01
334	SLV 1	16	-108	5764	10.71	9.05	0.01
334	SLV 2	16	-108	5764	10.71	9.05	0.01
334	SLV 3	12	-28	8420	33.69	6.82	0.03
334	SLV 4	12	-28	8420	33.69	6.82	0.03
334	SLV 5	9	-160	2139	-28.27	5.08	-0.02
334	SLV 6	9	-160	2139	-28.27	5.08	-0.02
334	SLV 7	-4	107	10990	48.33	-2.35	0.05
334	SLV 8	-4	107	10990	48.33	-2.35	0.05
334	SLV 9	-1	-125	1687	-38.71	-0.55	-0.03
334	SLV 10	-1	-125	1687	-38.71	-0.55	-0.03
334	SLV 11	-14	142	10538	37.89	-7.98	0.04
334	SLV 12	-14	142	10538	37.89	-7.98	0.04
334	SLV 13	-17	10	4257	-24.08	-9.72	-0.01
334	SLV 14	-17	10	4257	-24.08	-9.72	-0.01
334	SLV 15	-21	90	6912	-1.1	-11.95	0.01
334	SLV 16	-21	90	6912	-1.1	-11.95	0.01
335	SLU 1	930	-561	6145	6.59	25.77	0.17
335	SLU 2	930	-565	6160	6.73	25.75	0.17
335	SLU 3	956	-570	6293	6.53	26.55	0.18
335	SLU 4	956	-573	6302	6.61	26.54	0.18
335	SLU 5	947	-567	6238	6.56	26.29	0.17
335	SLU 6	972	-572	6371	6.37	27.09	0.18
335	SLU 7	972	-575	6380	6.45	27.08	0.18
335	SLU 8	963	-565	6302	6.26	26.84	0.18
335	SLU 9	963	-567	6310	6.34	26.83	0.18
335	SLU 10	1079	-645	7078	7.59	30.02	0.2
335	SLU 11	1105	-650	7212	7.39	30.82	0.21
335	SLU 12	1105	-652	7221	7.48	30.81	0.21
335	SLU 13	1095	-646	7157	7.43	30.56	0.2
335	SLU 14	1121	-652	7290	7.23	31.36	0.21
335	SLU 15	1121	-654	7299	7.31	31.35	0.21
335	SLU 16	1111	-644	7220	7.12	31.12	0.21
335	SLU 17	1112	-647	7229	7.21	31.11	0.21
335	SLU 18	1143	-675	7457	7.82	31.87	0.21
335	SLU 19	1143	-677	7466	7.9	31.86	0.21
335	SLU 20	1159	-677	7536	7.66	32.41	0.22
335	SLU 21	1159	-679	7544	7.74	32.4	0.22
335	SLU 22	1065	-635	6990	7.36	29.61	0.2
335	SLU 23	1065	-639	7004	7.5	29.6	0.19
335	SLU 24	1090	-644	7138	7.31	30.4	0.2
335	SLU 25	1091	-646	7146	7.39	30.39	0.2
335	SLU 26	1081	-640	7082	7.34	30.14	0.2
335	SLU 27	1107	-646	7216	7.15	30.94	0.21
335	SLU 28	1107	-648	7224	7.23	30.93	0.21
335	SLU 29	1097	-638	7146	7.04	30.69	0.21
335	SLU 30	1098	-641	7154	7.12	30.68	0.21
335	SLU 31	1214	-718	7923	8.37	33.87	0.22
335	SLU 32	1239	-723	8056	8.17	34.67	0.23
335	SLU 33	1239	-726	8065	8.25	34.66	0.23
335	SLU 34	1230	-720	8001	8.2	34.41	0.23
335	SLU 35	1256	-725	8134	8.01	35.21	0.24
335	SLU 36	1256	-727	8143	8.09	35.2	0.24
335	SLU 37	1246	-718	8064	7.9	34.96	0.24
335	SLU 38	1246	-720	8073	7.98	34.95	0.24
335	SLU 39	1277	-748	8302	8.6	35.72	0.24
335	SLU 40	1277	-751	8310	8.68	35.71	0.24
335	SLU 41	1293	-750	8380	8.43	36.26	0.25
335	SLU 42	1294	-752	8389	8.52	36.25	0.24
335	SLU 43	1163	-705	7700	8.3	32.18	0.21
335	SLU 44	1163	-709	7714	8.44	32.16	0.21
335	SLU 45	1189	-714	7848	8.24	32.96	0.22
335	SLU 46	1189	-716	7856	8.32	32.95	0.22
335	SLU 47	1180	-710	7792	8.27	32.7	0.21
335	SLU 48	1205	-715	7926	8.08	33.5	0.22
335	SLU 49	1205	-718	7934	8.16	33.49	0.22
335	SLU 50	1196	-708	7856	7.97	33.26	0.22
335	SLU 51	1196	-711	7864	8.05	33.25	0.22
335	SLU 52	1312	-788	8633	9.3	36.43	0.24
335	SLU 53	1337	-793	8766	9.1	37.23	0.25
335	SLU 54	1338	-795	8775	9.19	37.22	0.25
335	SLU 55	1328	-790	8711	9.14	36.97	0.25
335	SLU 56	1354	-795	8844	8.94	37.77	0.25
335	SLU 57	1354	-797	8853	9.02	37.76	0.25
335	SLU 58	1344	-788	8774	8.83	37.53	0.25
335	SLU 59	1345	-790	8783	8.92	37.52	0.25
335	SLU 60	1375	-818	9012	9.53	38.28	0.25
335	SLU 61	1376	-820	9020	9.61	38.27	0.25
335	SLU 62	1392	-820	9090	9.37	38.82	0.26

Nodo	Cont.	Reazione a traslazione			Reazione a rotazione		
Ind.	N.br.	x	y	z	x	y	z
335	SLU 63	1392	-822	9098	9.45	38.81	0.26
335	SLU 64	1298	-778	8544	9.07	36.03	0.24
335	SLU 65	1298	-782	8558	9.21	36.01	0.24
335	SLU 66	1323	-787	8692	9.02	36.81	0.24
335	SLU 67	1324	-789	8700	9.1	36.8	0.24
335	SLU 68	1314	-784	8636	9.05	36.55	0.24
335	SLU 69	1340	-789	8770	8.85	37.35	0.25
335	SLU 70	1340	-791	8779	8.94	37.34	0.25
335	SLU 71	1330	-782	8700	8.75	37.1	0.25
335	SLU 72	1330	-784	8709	8.83	37.09	0.25
335	SLU 73	1447	-861	9477	10.08	40.28	0.27
335	SLU 74	1472	-866	9610	9.88	41.08	0.27
335	SLU 75	1472	-869	9619	9.96	41.07	0.27
335	SLU 76	1463	-863	9555	9.91	40.82	0.27
335	SLU 77	1488	-868	9688	9.72	41.62	0.28
335	SLU 78	1489	-871	9697	9.8	41.61	0.28
335	SLU 79	1479	-861	9618	9.61	41.38	0.28
335	SLU 80	1479	-863	9627	9.69	41.37	0.28
335	SLU 81	1510	-891	9856	10.31	42.13	0.28
335	SLU 82	1510	-894	9865	10.39	42.12	0.28
335	SLU 83	1526	-893	9934	10.14	42.67	0.29
335	SLU 84	1527	-896	9943	10.23	42.66	0.29
335	SLE RA 1	969	-582	6387	6.81	26.87	0.18
335	SLE RA 2	969	-585	6396	6.9	26.86	0.18
335	SLE RA 3	986	-588	6485	6.77	27.39	0.18
335	SLE RA 4	986	-590	6491	6.83	27.38	0.18
335	SLE RA 5	980	-586	6448	6.79	27.21	0.18
335	SLE RA 6	997	-590	6537	6.66	27.75	0.19
335	SLE RA 7	997	-591	6543	6.72	27.74	0.18
335	SLE RA 8	990	-585	6491	6.59	27.58	0.18
335	SLE RA 9	990	-586	6496	6.65	27.58	0.18
335	SLE RA 10	1068	-638	7009	7.48	29.7	0.2
335	SLE RA 11	1085	-641	7098	7.35	30.24	0.2
335	SLE RA 12	1085	-643	7103	7.4	30.23	0.2
335	SLE RA 13	1079	-639	7061	7.37	30.06	0.2
335	SLE RA 14	1096	-642	7150	7.24	30.6	0.21
335	SLE RA 15	1096	-644	7155	7.29	30.59	0.21
335	SLE RA 16	1089	-638	7103	7.17	30.43	0.21
335	SLE RA 17	1090	-639	7109	7.22	30.43	0.2
335	SLE RA 18	1110	-658	7261	7.63	30.94	0.21
335	SLE RA 19	1110	-660	7267	7.69	30.93	0.2
335	SLE RA 20	1121	-659	7313	7.52	31.3	0.21
335	SLE RA 21	1121	-661	7319	7.58	31.29	0.21
335	SLE FR 1	969	-582	6387	6.81	26.87	0.18
335	SLE FR 2	969	-583	6388	6.83	26.86	0.18
335	SLE FR 3	973	-583	6407	6.77	27.01	0.18
335	SLE FR 4	1011	-606	6651	7.07	28.09	0.18
335	SLE FR 5	1015	-606	6670	7.01	28.23	0.19
335	SLE FR 6	1039	-620	6824	7.22	28.9	0.19
335	SLE QP 1	969	-582	6387	6.81	26.87	0.18
335	SLE QP 2	1011	-605	6649	7.06	28.09	0.19
335	SLD 1	1500	-143	6805	-14.14	49.93	0.62
335	SLD 2	1500	-143	6805	-14.14	49.93	0.62
335	SLD 3	1631	-475	8426	-1.69	52.79	0.48
335	SLD 4	1631	-475	8426	-1.69	52.79	0.48
335	SLD 5	959	38	4238	-18.2	30.31	0.53
335	SLD 6	959	38	4238	-18.2	30.31	0.53
335	SLD 7	1396	-1071	9640	23.33	39.82	0.06
335	SLD 8	1396	-1071	9640	23.33	39.82	0.06
335	SLD 9	626	-140	3658	-9.21	16.35	0.31
335	SLD 10	626	-140	3658	-9.21	16.35	0.31
335	SLD 11	1063	-1248	9060	32.31	25.86	-0.15
335	SLD 12	1063	-1248	9060	32.31	25.86	-0.15
335	SLD 13	391	-735	4872	15.8	3.39	-0.11
335	SLD 14	391	-735	4872	15.8	3.39	-0.11
335	SLD 15	522	-1068	6493	28.25	6.24	-0.25
335	SLD 16	522	-1068	6493	28.25	6.24	-0.25
335	SLV 1	2116	463	6934	-41.72	77.62	1.18
335	SLV 2	2116	463	6934	-41.72	77.62	1.18
335	SLV 3	2427	-320	10771	-12.37	84.35	0.85
335	SLV 4	2427	-320	10771	-12.37	84.35	0.85
335	SLV 5	872	904	915	-52.09	32.75	0.98
335	SLV 6	872	904	915	-52.09	32.75	0.98
335	SLV 7	1907	-1708	13705	45.74	55.17	-0.11
335	SLV 8	1907	-1708	13705	45.74	55.17	-0.11
335	SLV 9	115	498	-407	-31.63	1.01	0.48
335	SLV 10	115	498	-407	-31.63	1.01	0.48
335	SLV 11	1150	-2114	12383	66.2	23.43	-0.61
335	SLV 12	1150	-2114	12383	66.2	23.43	-0.61
335	SLV 13	-405	-890	2527	26.49	-28.17	-0.48
335	SLV 14	-405	-890	2527	26.49	-28.17	-0.48
335	SLV 15	-94	-1673	6364	55.83	-21.45	-0.81
335	SLV 16	-94	-1673	6364	55.83	-21.45	-0.81
336	SLU 1	689	-5	5029	-2.12	35.5	0.02
336	SLU 2	688	-5	5040	-2.12	35.45	0.02
336	SLU 3	712	-5	5150	-2.23	36.62	0.02
336	SLU 4	711	-5	5156	-2.22	36.59	0.02
336	SLU 5	705	-5	5104	-2.19	36.26	0.02
336	SLU 6	729	-5	5215	-2.3	37.44	0.02
336	SLU 7	728	-5	5221	-2.3	37.4	0.02
336	SLU 8	724	-5	5159	-2.27	37.13	0.02

Nodo	Cont.	Reazione a traslazione			Reazione a rotazione		
Ind.	N.br.	x	y	z	x	y	z
336	SLU 9	722	-5	5165	-2.27	37.1	0.02
336	SLU 10	809	-6	5786	-2.36	41.6	0.02
336	SLU 11	833	-6	5897	-2.47	42.77	0.02
336	SLU 12	832	-6	5903	-2.47	42.74	0.02
336	SLU 13	826	-6	5851	-2.44	42.41	0.02
336	SLU 14	850	-6	5961	-2.54	43.59	0.02
336	SLU 15	849	-6	5968	-2.54	43.56	0.02
336	SLU 16	845	-6	5905	-2.52	43.28	0.02
336	SLU 17	844	-6	5912	-2.51	43.25	0.02
336	SLU 18	863	-7	6096	-2.47	44.29	0.02
336	SLU 19	862	-7	6102	-2.47	44.26	0.02
336	SLU 20	880	-7	6161	-2.54	45.11	0.02
336	SLU 21	879	-7	6167	-2.54	45.07	0.02
336	SLU 22	797	-6	5714	-2.39	40.97	0.02
336	SLU 23	795	-6	5724	-2.39	40.92	0.02
336	SLU 24	819	-6	5835	-2.5	42.09	0.02
336	SLU 25	818	-6	5841	-2.49	42.06	0.02
336	SLU 26	812	-6	5789	-2.46	41.73	0.02
336	SLU 27	836	-6	5899	-2.57	42.91	0.02
336	SLU 28	835	-6	5906	-2.57	42.87	0.02
336	SLU 29	831	-6	5843	-2.54	42.6	0.02
336	SLU 30	830	-6	5850	-2.54	42.57	0.02
336	SLU 31	916	-7	6471	-2.63	47.07	0.03
336	SLU 32	941	-7	6581	-2.74	48.24	0.03
336	SLU 33	940	-7	6587	-2.74	48.21	0.03
336	SLU 34	933	-7	6535	-2.71	47.88	0.03
336	SLU 35	958	-7	6646	-2.81	49.06	0.03
336	SLU 36	957	-7	6652	-2.81	49.03	0.03
336	SLU 37	952	-7	6590	-2.79	48.75	0.03
336	SLU 38	951	-7	6596	-2.78	48.72	0.03
336	SLU 39	970	-7	6780	-2.74	49.76	0.03
336	SLU 40	969	-7	6787	-2.74	49.73	0.03
336	SLU 41	987	-7	6845	-2.81	50.57	0.03
336	SLU 42	986	-7	6851	-2.81	50.54	0.03
336	SLU 43	859	-7	6303	-2.67	44.28	0.02
336	SLU 44	858	-7	6314	-2.66	44.23	0.02
336	SLU 45	882	-7	6424	-2.77	45.4	0.02
336	SLU 46	881	-7	6430	-2.77	45.37	0.02
336	SLU 47	875	-7	6378	-2.74	45.04	0.02
336	SLU 48	899	-7	6489	-2.85	46.21	0.02
336	SLU 49	898	-7	6495	-2.84	46.18	0.02
336	SLU 50	894	-7	6433	-2.82	45.91	0.02
336	SLU 51	893	-7	6439	-2.81	45.88	0.02
336	SLU 52	979	-8	7060	-2.9	50.38	0.03
336	SLU 53	1003	-8	7171	-3.01	51.55	0.03
336	SLU 54	1002	-8	7177	-3.01	51.52	0.03
336	SLU 55	996	-8	7125	-2.98	51.19	0.03
336	SLU 56	1021	-8	7236	-3.09	52.36	0.03
336	SLU 57	1019	-8	7242	-3.09	52.33	0.03
336	SLU 58	1015	-8	7180	-3.06	52.06	0.03
336	SLU 59	1014	-8	7186	-3.06	52.03	0.03
336	SLU 60	1033	-8	7370	-3.01	53.07	0.03
336	SLU 61	1032	-8	7376	-3.01	53.04	0.03
336	SLU 62	1050	-8	7435	-3.09	53.88	0.03
336	SLU 63	1049	-8	7441	-3.09	53.85	0.03
336	SLU 64	967	-7	6988	-2.94	49.75	0.03
336	SLU 65	965	-7	6998	-2.93	49.7	0.03
336	SLU 66	989	-8	7109	-3.04	50.87	0.03
336	SLU 67	988	-8	7115	-3.04	50.84	0.03
336	SLU 68	982	-7	7063	-3.01	50.51	0.03
336	SLU 69	1006	-8	7174	-3.12	51.68	0.03
336	SLU 70	1005	-8	7180	-3.11	51.65	0.03
336	SLU 71	1001	-7	7118	-3.09	51.38	0.03
336	SLU 72	1000	-7	7124	-3.08	51.34	0.03
336	SLU 73	1086	-8	7745	-3.17	55.85	0.03
336	SLU 74	1111	-8	7855	-3.28	57.02	0.03
336	SLU 75	1110	-8	7861	-3.28	56.99	0.03
336	SLU 76	1103	-8	7810	-3.25	56.66	0.03
336	SLU 77	1128	-8	7920	-3.36	57.83	0.03
336	SLU 78	1127	-8	7926	-3.36	57.8	0.03
336	SLU 79	1122	-8	7864	-3.33	57.53	0.03
336	SLU 80	1121	-8	7870	-3.33	57.5	0.03
336	SLU 81	1140	-9	8055	-3.28	58.54	0.03
336	SLU 82	1139	-9	8061	-3.28	58.5	0.03
336	SLU 83	1157	-9	8119	-3.36	59.35	0.03
336	SLU 84	1156	-9	8125	-3.36	59.32	0.03
336	SLE RA 1	720	-6	5225	-2.2	37.07	0.02
336	SLE RA 2	719	-6	5232	-2.2	37.03	0.02
336	SLE RA 3	735	-6	5305	-2.27	37.81	0.02
336	SLE RA 4	734	-6	5310	-2.27	37.79	0.02
336	SLE RA 5	730	-6	5275	-2.25	37.57	0.02
336	SLE RA 6	746	-6	5349	-2.32	38.36	0.02
336	SLE RA 7	746	-6	5353	-2.32	38.33	0.02
336	SLE RA 8	743	-6	5311	-2.3	38.15	0.02
336	SLE RA 9	742	-6	5315	-2.3	38.13	0.02
336	SLE RA 10	800	-6	5729	-2.36	41.13	0.02
336	SLE RA 11	816	-6	5803	-2.43	41.91	0.02
336	SLE RA 12	815	-6	5807	-2.43	41.89	0.02
336	SLE RA 13	811	-6	5773	-2.41	41.67	0.02
336	SLE RA 14	827	-6	5846	-2.48	42.46	0.02
336	SLE RA 15	827	-6	5850	-2.48	42.43	0.02

Nodo	Cont.	Reazione a traslazione			Reazione a rotazione		
Ind.	N.br.	x	y	z	x	y	z
336	SLE RA 16	824	-6	5809	-2.46	42.25	0.02
336	SLE RA 17	823	-6	5813	-2.46	42.23	0.02
336	SLE RA 18	836	-6	5936	-2.43	42.93	0.02
336	SLE RA 19	835	-6	5940	-2.43	42.9	0.02
336	SLE RA 20	847	-6	5979	-2.48	43.47	0.02
336	SLE RA 21	846	-6	5983	-2.48	43.45	0.02
336	SLE FR 1	720	-6	5225	-2.2	37.07	0.02
336	SLE FR 2	720	-6	5226	-2.2	37.06	0.02
336	SLE FR 3	725	-6	5242	-2.22	37.28	0.02
336	SLE FR 4	755	-6	5440	-2.27	38.82	0.02
336	SLE FR 5	759	-6	5455	-2.29	39.04	0.02
336	SLE FR 6	778	-6	5580	-2.31	40	0.02
336	SLE QP 1	720	-6	5225	-2.2	37.07	0.02
336	SLE QP 2	755	-6	5438	-2.27	38.82	0.02
336	SLD 1	1747	-1	5444	-4.68	79.38	0.01
336	SLD 2	1747	-1	5444	-4.68	79.38	0.01
336	SLD 3	1626	-5	6671	-1.74	83.49	0.02
336	SLD 4	1626	-5	6671	-1.74	83.49	0.02
336	SLD 5	1236	2	3579	-7.45	44.77	0.01
336	SLD 6	1236	2	3579	-7.45	44.77	0.01
336	SLD 7	832	-11	7669	2.35	58.45	0.03
336	SLD 8	832	-11	7669	2.35	58.45	0.03
336	SLD 9	677	0	3207	-6.88	19.2	0.01
336	SLD 10	677	0	3207	-6.88	19.2	0.01
336	SLD 11	273	-13	7298	2.91	32.88	0.04
336	SLD 12	273	-13	7298	2.91	32.88	0.04
336	SLD 13	-116	-7	4205	-2.8	-5.84	0.02
336	SLD 14	-116	-7	4205	-2.8	-5.84	0.02
336	SLD 15	-238	-11	5432	0.14	-1.73	0.03
336	SLD 16	-238	-11	5432	0.14	-1.73	0.03
336	SLV 1	3017	6	5397	-7.92	130.87	0.01
336	SLV 2	3017	6	5397	-7.92	130.87	0.01
336	SLV 3	2730	-3	8311	-0.96	140.56	0.02
336	SLV 4	2730	-3	8311	-0.96	140.56	0.02
336	SLV 5	1868	12	1007	-14.51	51.75	-0.01
336	SLV 6	1868	12	1007	-14.51	51.75	-0.01
336	SLV 7	913	-19	10719	8.67	84.03	0.05
336	SLV 8	913	-19	10719	8.67	84.03	0.05
336	SLV 9	597	8	157	-13.21	-6.38	-0.01
336	SLV 10	597	8	157	-13.21	-6.38	-0.01
336	SLV 11	-358	-23	9870	9.98	25.9	0.05
336	SLV 12	-358	-23	9870	9.98	25.9	0.05
336	SLV 13	-1221	-8	2566	-3.58	-62.91	0.02
336	SLV 14	-1221	-8	2566	-3.58	-62.91	0.02
336	SLV 15	-1507	-18	5480	3.38	-53.22	0.04
336	SLV 16	-1507	-18	5480	3.38	-53.22	0.04
337	SLU 1	453	8	4407	-7.36	22.38	0.02
337	SLU 2	451	8	4415	-7.37	22.31	0.02
337	SLU 3	469	8	4510	-7.63	23.19	0.02
337	SLU 4	468	8	4514	-7.64	23.15	0.02
337	SLU 5	465	8	4470	-7.54	22.97	0.02
337	SLU 6	483	8	4565	-7.8	23.85	0.02
337	SLU 7	482	8	4570	-7.81	23.81	0.02
337	SLU 8	481	8	4518	-7.7	23.7	0.02
337	SLU 9	480	8	4522	-7.71	23.65	0.02
337	SLU 10	538	9	5066	-8.31	26.47	0.02
337	SLU 11	556	9	5162	-8.57	27.36	0.02
337	SLU 12	555	9	5166	-8.58	27.32	0.02
337	SLU 13	552	9	5122	-8.48	27.13	0.02
337	SLU 14	570	9	5217	-8.74	28.02	0.02
337	SLU 15	569	9	5221	-8.75	27.98	0.02
337	SLU 16	567	9	5170	-8.64	27.87	0.02
337	SLU 17	566	9	5174	-8.65	27.82	0.02
337	SLU 18	577	9	5338	-8.7	28.33	0.02
337	SLU 19	575	9	5343	-8.71	28.29	0.02
337	SLU 20	591	9	5394	-8.87	28.99	0.02
337	SLU 21	589	9	5398	-8.88	28.95	0.02
337	SLU 22	528	9	5001	-8.33	26.04	0.02
337	SLU 23	526	9	5009	-8.34	25.97	0.02
337	SLU 24	545	9	5104	-8.6	26.86	0.02
337	SLU 25	544	9	5108	-8.6	26.82	0.02
337	SLU 26	540	9	5064	-8.51	26.63	0.02
337	SLU 27	559	9	5159	-8.77	27.52	0.02
337	SLU 28	558	9	5163	-8.77	27.48	0.02
337	SLU 29	556	9	5112	-8.67	27.36	0.02
337	SLU 30	555	9	5116	-8.67	27.32	0.02
337	SLU 31	613	10	5660	-9.28	30.14	0.02
337	SLU 32	631	10	5755	-9.54	31.03	0.03
337	SLU 33	630	10	5760	-9.54	30.98	0.03
337	SLU 34	627	10	5716	-9.45	30.8	0.02
337	SLU 35	645	10	5811	-9.71	31.69	0.03
337	SLU 36	644	10	5815	-9.71	31.64	0.03
337	SLU 37	643	10	5764	-9.61	31.53	0.03
337	SLU 38	641	10	5768	-9.61	31.49	0.03
337	SLU 39	652	10	5932	-9.67	32	0.03
337	SLU 40	651	10	5937	-9.68	31.95	0.03
337	SLU 41	666	10	5988	-9.84	32.66	0.03
337	SLU 42	665	10	5992	-9.84	32.61	0.03
337	SLU 43	563	10	5526	-9.24	27.83	0.02
337	SLU 44	561	10	5533	-9.25	27.76	0.02
337	SLU 45	580	10	5628	-9.51	28.65	0.02

Nodo	Cont.	Reazione a traslazione			Reazione a rotazione		
Ind.	N.br.	x	y	z	x	y	z
337	SLU 46	578	10	5633	-9.52	28.61	0.02
337	SLU 47	575	10	5589	-9.42	28.42	0.02
337	SLU 48	594	10	5684	-9.68	29.31	0.03
337	SLU 49	592	10	5688	-9.69	29.27	0.03
337	SLU 50	591	10	5637	-9.58	29.15	0.02
337	SLU 51	590	10	5641	-9.58	29.11	0.02
337	SLU 52	648	11	6185	-10.19	31.93	0.03
337	SLU 53	666	11	6280	-10.45	32.82	0.03
337	SLU 54	665	11	6285	-10.46	32.78	0.03
337	SLU 55	662	11	6240	-10.36	32.59	0.03
337	SLU 56	680	11	6336	-10.62	33.48	0.03
337	SLU 57	679	11	6340	-10.63	33.44	0.03
337	SLU 58	677	11	6288	-10.52	33.32	0.03
337	SLU 59	676	11	6293	-10.52	33.28	0.03
337	SLU 60	687	11	6457	-10.58	33.79	0.03
337	SLU 61	685	11	6461	-10.59	33.75	0.03
337	SLU 62	701	11	6512	-10.75	34.45	0.03
337	SLU 63	699	11	6517	-10.76	34.41	0.03
337	SLU 64	638	11	6120	-10.2	31.5	0.03
337	SLU 65	636	11	6127	-10.21	31.43	0.03
337	SLU 66	655	11	6222	-10.48	32.32	0.03
337	SLU 67	654	11	6227	-10.48	32.27	0.03
337	SLU 68	650	11	6182	-10.38	32.09	0.03
337	SLU 69	669	11	6278	-10.64	32.98	0.03
337	SLU 70	668	11	6282	-10.65	32.93	0.03
337	SLU 71	666	11	6230	-10.54	32.82	0.03
337	SLU 72	665	11	6235	-10.55	32.78	0.03
337	SLU 73	723	12	6779	-11.15	35.59	0.03
337	SLU 74	741	12	6874	-11.42	36.48	0.03
337	SLU 75	740	12	6878	-11.42	36.44	0.03
337	SLU 76	737	12	6834	-11.32	36.25	0.03
337	SLU 77	755	12	6929	-11.58	37.14	0.03
337	SLU 78	754	12	6934	-11.59	37.1	0.03
337	SLU 79	753	12	6882	-11.48	36.99	0.03
337	SLU 80	752	12	6887	-11.49	36.94	0.03
337	SLU 81	762	12	7051	-11.55	37.45	0.03
337	SLU 82	761	12	7055	-11.55	37.41	0.03
337	SLU 83	776	12	7106	-11.72	38.11	0.03
337	SLU 84	775	12	7111	-11.72	38.07	0.03
337	SLE RA 1	474	8	4577	-7.64	23.42	0.02
337	SLE RA 2	473	8	4582	-7.64	23.38	0.02
337	SLE RA 3	485	8	4645	-7.82	23.97	0.02
337	SLE RA 4	485	8	4648	-7.82	23.94	0.02
337	SLE RA 5	482	8	4619	-7.76	23.82	0.02
337	SLE RA 6	495	8	4682	-7.93	24.41	0.02
337	SLE RA 7	494	8	4685	-7.93	24.38	0.02
337	SLE RA 8	493	8	4651	-7.86	24.3	0.02
337	SLE RA 9	492	8	4654	-7.87	24.28	0.02
337	SLE RA 10	531	9	5016	-8.27	26.15	0.02
337	SLE RA 11	543	9	5080	-8.44	26.75	0.02
337	SLE RA 12	542	9	5083	-8.45	26.72	0.02
337	SLE RA 13	540	9	5053	-8.38	26.6	0.02
337	SLE RA 14	552	9	5117	-8.56	27.19	0.02
337	SLE RA 15	552	9	5120	-8.56	27.16	0.02
337	SLE RA 16	551	9	5085	-8.49	27.08	0.02
337	SLE RA 17	550	9	5088	-8.49	27.05	0.02
337	SLE RA 18	557	9	5198	-8.53	27.39	0.02
337	SLE RA 19	556	9	5201	-8.54	27.37	0.02
337	SLE RA 20	566	9	5235	-8.65	27.83	0.02
337	SLE RA 21	565	9	5238	-8.65	27.81	0.02
337	SLE FR 1	474	8	4577	-7.64	23.42	0.02
337	SLE FR 2	474	8	4578	-7.64	23.41	0.02
337	SLE FR 3	478	8	4592	-7.68	23.6	0.02
337	SLE FR 4	499	8	4764	-7.91	24.61	0.02
337	SLE FR 5	503	8	4778	-7.95	24.79	0.02
337	SLE FR 6	516	8	4887	-8.09	25.41	0.02
337	SLE QP 1	474	8	4577	-7.64	23.42	0.02
337	SLE QP 2	499	8	4763	-7.91	24.61	0.02
337	SLD 1	1513	9	4633	-6.25	70.06	0.02
337	SLD 2	1513	9	4633	-6.25	70.06	0.02
337	SLD 3	1410	11	5571	-12.13	66.3	0.03
337	SLD 4	1410	11	5571	-12.13	66.3	0.03
337	SLD 5	960	4	3301	1.5	43.95	-0.01
337	SLD 6	960	4	3301	1.5	43.95	-0.01
337	SLD 7	616	13	6428	-18.09	31.42	0.05
337	SLD 8	616	13	6428	-18.09	31.42	0.05
337	SLD 9	382	3	3098	2.28	17.81	-0.01
337	SLD 10	382	3	3098	2.28	17.81	-0.01
337	SLD 11	38	12	6225	-17.32	5.28	0.05
337	SLD 12	38	12	6225	-17.32	5.28	0.05
337	SLD 13	-412	5	3955	-3.68	-17.07	0.01
337	SLD 14	-412	5	3955	-3.68	-17.07	0.01
337	SLD 15	-515	8	4894	-9.56	-20.83	0.02
337	SLD 16	-515	8	4894	-9.56	-20.83	0.02
337	SLV 1	2812	9	4429	-4	128.19	0.01
337	SLV 2	2812	9	4429	-4	128.19	0.01
337	SLV 3	2566	16	6659	-17.86	119.19	0.05
337	SLV 4	2566	16	6659	-17.86	119.19	0.05
337	SLV 5	1567	-2	1280	14.29	69.34	-0.05
337	SLV 6	1567	-2	1280	14.29	69.34	-0.05
337	SLV 7	745	21	8715	-31.92	39.34	0.09

Nodo	Cont.	Reazione a traslazione			Reazione a rotazione		
Ind.	N.br.	x	y	z	x	y	z
337	SLV 8	745	21	8715	-31.92	39.34	0.09
337	SLV 9	253	-4	812	16.1	9.89	-0.05
337	SLV 10	253	-4	812	16.1	9.89	-0.05
337	SLV 11	-569	18	8246	-30.1	-20.11	0.09
337	SLV 12	-569	18	8246	-30.1	-20.11	0.09
337	SLV 13	-1568	1	2867	2.05	-69.96	-0.01
337	SLV 14	-1568	1	2867	2.05	-69.96	-0.01
337	SLV 15	-1814	8	5097	-11.81	-78.96	0.03
337	SLV 16	-1814	8	5097	-11.81	-78.96	0.03
338	SLU 1	326	18	3945	-12.28	16.77	0.04
338	SLU 2	324	18	3951	-12.3	16.7	0.04
338	SLU 3	340	18	4033	-12.71	17.46	0.04
338	SLU 4	339	18	4037	-12.72	17.42	0.04
338	SLU 5	337	18	3999	-12.56	17.29	0.04
338	SLU 6	353	19	4081	-12.97	18.06	0.04
338	SLU 7	352	19	4085	-12.98	18.02	0.04
338	SLU 8	351	18	4041	-12.8	17.96	0.04
338	SLU 9	350	18	4045	-12.81	17.91	0.04
338	SLU 10	389	20	4536	-13.88	19.93	0.04
338	SLU 11	405	21	4618	-14.3	20.69	0.04
338	SLU 12	404	21	4621	-14.31	20.65	0.04
338	SLU 13	402	21	4583	-14.15	20.52	0.04
338	SLU 14	418	21	4666	-14.56	21.29	0.04
338	SLU 15	417	21	4669	-14.57	21.25	0.04
338	SLU 16	417	21	4626	-14.39	21.19	0.04
338	SLU 17	416	21	4629	-14.4	21.14	0.04
338	SLU 18	419	21	4780	-14.54	21.38	0.04
338	SLU 19	418	21	4784	-14.56	21.34	0.04
338	SLU 20	432	22	4828	-14.81	21.98	0.04
338	SLU 21	431	22	4832	-14.82	21.93	0.04
338	SLU 22	383	20	4473	-13.89	19.61	0.04
338	SLU 23	381	20	4479	-13.91	19.54	0.04
338	SLU 24	397	21	4561	-14.33	20.31	0.04
338	SLU 25	396	21	4565	-14.34	20.27	0.04
338	SLU 26	394	21	4527	-14.17	20.14	0.04
338	SLU 27	410	21	4609	-14.59	20.9	0.04
338	SLU 28	409	21	4613	-14.6	20.86	0.04
338	SLU 29	408	21	4569	-14.42	20.8	0.04
338	SLU 30	407	21	4572	-14.43	20.76	0.04
338	SLU 31	446	23	5064	-15.5	22.77	0.04
338	SLU 32	462	23	5146	-15.91	23.54	0.05
338	SLU 33	461	23	5149	-15.92	23.5	0.05
338	SLU 34	459	23	5111	-15.76	23.37	0.05
338	SLU 35	475	23	5194	-16.18	24.13	0.05
338	SLU 36	474	23	5197	-16.19	24.09	0.05
338	SLU 37	474	23	5153	-16.01	24.03	0.05
338	SLU 38	473	23	5157	-16.02	23.99	0.05
338	SLU 39	476	24	5308	-16.16	24.23	0.05
338	SLU 40	475	24	5312	-16.17	24.18	0.05
338	SLU 41	489	24	5356	-16.42	24.82	0.05
338	SLU 42	488	24	5360	-16.43	24.78	0.05
338	SLU 43	404	22	4948	-15.4	20.82	0.04
338	SLU 44	402	22	4954	-15.42	20.75	0.04
338	SLU 45	418	23	5036	-15.84	21.52	0.05
338	SLU 46	417	23	5040	-15.85	21.48	0.05
338	SLU 47	415	23	5002	-15.69	21.35	0.04
338	SLU 48	431	23	5084	-16.1	22.11	0.05
338	SLU 49	430	23	5087	-16.11	22.07	0.05
338	SLU 50	429	23	5044	-15.93	22.01	0.05
338	SLU 51	428	23	5047	-15.94	21.97	0.05
338	SLU 52	468	25	5538	-17.01	23.98	0.05
338	SLU 53	484	25	5621	-17.43	24.75	0.05
338	SLU 54	483	25	5624	-17.44	24.71	0.05
338	SLU 55	480	25	5586	-17.27	24.58	0.05
338	SLU 56	496	26	5668	-17.69	25.34	0.05
338	SLU 57	495	26	5672	-17.7	25.3	0.05
338	SLU 58	495	25	5628	-17.52	25.24	0.05
338	SLU 59	494	25	5632	-17.53	25.2	0.05
338	SLU 60	497	26	5783	-17.67	25.44	0.05
338	SLU 61	496	26	5786	-17.68	25.4	0.05
338	SLU 62	510	26	5831	-17.94	26.03	0.05
338	SLU 63	509	26	5834	-17.95	25.99	0.05
338	SLU 64	461	25	5476	-17.02	23.67	0.05
338	SLU 65	459	25	5482	-17.04	23.6	0.05
338	SLU 66	475	25	5564	-17.45	24.36	0.05
338	SLU 67	474	25	5567	-17.47	24.32	0.05
338	SLU 68	472	25	5530	-17.3	24.19	0.05
338	SLU 69	488	26	5612	-17.72	24.96	0.05
338	SLU 70	487	26	5615	-17.73	24.92	0.05
338	SLU 71	486	25	5572	-17.55	24.85	0.05
338	SLU 72	485	25	5575	-17.56	24.81	0.05
338	SLU 73	524	27	6066	-18.63	26.83	0.05
338	SLU 74	541	28	6148	-19.04	27.59	0.05
338	SLU 75	539	28	6152	-19.05	27.55	0.05
338	SLU 76	537	27	6114	-18.89	27.42	0.05
338	SLU 77	553	28	6196	-19.3	28.19	0.06
338	SLU 78	552	28	6200	-19.32	28.15	0.06
338	SLU 79	552	28	6156	-19.13	28.08	0.05
338	SLU 80	551	28	6160	-19.15	28.04	0.05
338	SLU 81	554	28	6311	-19.29	28.28	0.06
338	SLU 82	553	28	6314	-19.3	28.24	0.06

Nodo	Cont.	Reazione a traslazione			Reazione a rotazione		
Ind.	N.br.	x	y	z	x	y	z
338	SLU 83	567	28	6359	-19.55	28.88	0.06
338	SLU 84	566	28	6362	-19.56	28.83	0.06
338	SLE RA 1	342	18	4096	-12.74	17.58	0.04
338	SLE RA 2	341	18	4100	-12.75	17.53	0.04
338	SLE RA 3	351	19	4155	-13.03	18.04	0.04
338	SLE RA 4	351	19	4157	-13.03	18.02	0.04
338	SLE RA 5	349	19	4132	-12.93	17.93	0.04
338	SLE RA 6	360	19	4187	-13.2	18.44	0.04
338	SLE RA 7	359	19	4189	-13.21	18.41	0.04
338	SLE RA 8	359	19	4160	-13.09	18.37	0.04
338	SLE RA 9	358	19	4162	-13.1	18.34	0.04
338	SLE RA 10	384	20	4490	-13.81	19.69	0.04
338	SLE RA 11	395	20	4545	-14.08	20.2	0.04
338	SLE RA 12	394	20	4547	-14.09	20.17	0.04
338	SLE RA 13	393	20	4522	-13.98	20.08	0.04
338	SLE RA 14	404	21	4576	-14.26	20.59	0.04
338	SLE RA 15	403	21	4579	-14.27	20.57	0.04
338	SLE RA 16	403	20	4550	-14.15	20.53	0.04
338	SLE RA 17	402	21	4552	-14.15	20.5	0.04
338	SLE RA 18	404	21	4653	-14.25	20.66	0.04
338	SLE RA 19	404	21	4655	-14.26	20.63	0.04
338	SLE RA 20	413	21	4685	-14.43	21.05	0.04
338	SLE RA 21	412	21	4687	-14.43	21.02	0.04
338	SLE FR 1	342	18	4096	-12.74	17.58	0.04
338	SLE FR 2	342	18	4097	-12.74	17.57	0.04
338	SLE FR 3	345	19	4109	-12.81	17.74	0.04
338	SLE FR 4	360	19	4264	-13.19	18.49	0.04
338	SLE FR 5	364	19	4276	-13.26	18.66	0.04
338	SLE FR 6	373	20	4374	-13.49	19.12	0.04
338	SLE QP 1	342	18	4096	-12.74	17.58	0.04
338	SLE QP 2	361	19	4263	-13.19	18.5	0.04
338	SLD 1	1412	18	4069	-10.22	64.98	0.03
338	SLD 2	1412	18	4069	-10.22	64.98	0.03
338	SLD 3	1323	25	4839	-20.19	61.69	0.06
338	SLD 4	1323	25	4839	-20.19	61.69	0.06
338	SLD 5	811	9	3037	2.83	37.43	0
338	SLD 6	811	9	3037	2.83	37.43	0
338	SLD 7	514	31	5603	-30.42	26.47	0.08
338	SLD 8	514	31	5603	-30.42	26.47	0.08
338	SLD 9	207	7	2923	4.04	10.53	-0.01
338	SLD 10	207	7	2923	4.04	10.53	-0.01
338	SLD 11	-90	29	5489	-29.21	-0.42	0.08
338	SLD 12	-90	29	5489	-29.21	-0.42	0.08
338	SLD 13	-601	13	3687	-6.19	-24.68	0.02
338	SLD 14	-601	13	3687	-6.19	-24.68	0.02
338	SLD 15	-690	20	4457	-16.16	-27.97	0.04
338	SLD 16	-690	20	4457	-16.16	-27.97	0.04
338	SLV 1	2758	17	3798	-6.18	124.43	0.03
338	SLV 2	2758	17	3798	-6.18	124.43	0.03
338	SLV 3	2543	33	5629	-29.67	116.51	0.09
338	SLV 4	2543	33	5629	-29.67	116.51	0.09
338	SLV 5	1405	-5	1347	24.54	62.29	-0.05
338	SLV 6	1405	-5	1347	24.54	62.29	-0.05
338	SLV 7	690	47	7449	-53.76	35.9	0.14
338	SLV 8	690	47	7449	-53.76	35.9	0.14
338	SLV 9	32	-9	1077	27.38	1.11	-0.06
338	SLV 10	32	-9	1077	27.38	1.11	-0.06
338	SLV 11	-684	44	7179	-50.92	-25.28	0.13
338	SLV 12	-684	44	7179	-50.92	-25.28	0.13
338	SLV 13	-1822	5	2898	3.29	-79.5	-0.01
338	SLV 14	-1822	5	2898	3.29	-79.5	-0.01
338	SLV 15	-2036	21	4728	-20.2	-87.42	0.05
338	SLV 16	-2036	21	4728	-20.2	-87.42	0.05
339	SLU 1	321	23	3541	-15.78	16.4	0.05
339	SLU 2	319	23	3545	-15.8	16.33	0.05
339	SLU 3	337	24	3617	-16.33	17.17	0.05
339	SLU 4	336	24	3620	-16.35	17.13	0.05
339	SLU 5	333	24	3587	-16.14	16.98	0.05
339	SLU 6	351	25	3659	-16.66	17.82	0.05
339	SLU 7	350	25	3662	-16.68	17.78	0.05
339	SLU 8	349	24	3625	-16.45	17.71	0.05
339	SLU 9	348	24	3627	-16.46	17.66	0.05
339	SLU 10	381	27	4071	-17.84	19.39	0.05
339	SLU 11	399	27	4142	-18.36	20.22	0.05
339	SLU 12	397	27	4145	-18.38	20.18	0.05
339	SLU 13	395	27	4112	-18.17	20.04	0.05
339	SLU 14	412	28	4184	-18.7	20.87	0.05
339	SLU 15	411	28	4187	-18.71	20.83	0.06
339	SLU 16	411	27	4150	-18.48	20.76	0.05
339	SLU 17	409	27	4153	-18.5	20.72	0.05
339	SLU 18	409	28	4291	-18.68	20.77	0.05
339	SLU 19	408	28	4294	-18.7	20.72	0.06
339	SLU 20	423	28	4333	-19.02	21.42	0.06
339	SLU 21	422	28	4336	-19.03	21.38	0.06
339	SLU 22	377	26	4011	-17.85	19.17	0.05
339	SLU 23	375	27	4016	-17.87	19.1	0.05
339	SLU 24	392	27	4087	-18.4	19.94	0.05
339	SLU 25	391	27	4090	-18.42	19.89	0.05
339	SLU 26	389	27	4058	-18.21	19.75	0.05
339	SLU 27	406	28	4129	-18.74	20.59	0.06
339	SLU 28	405	28	4132	-18.75	20.54	0.06

Nodo	Cont.	Reazione a traslazione			Reazione a rotazione		
Ind.	N.br.	x	y	z	x	y	z
339	SLU 29	404	27	4095	-18.52	20.47	0.05
339	SLU 30	403	27	4098	-18.53	20.43	0.05
339	SLU 31	436	30	4541	-19.91	22.15	0.06
339	SLU 32	454	30	4613	-20.44	22.99	0.06
339	SLU 33	453	30	4616	-20.45	22.95	0.06
339	SLU 34	450	30	4583	-20.24	22.8	0.06
339	SLU 35	468	31	4655	-20.77	23.64	0.06
339	SLU 36	467	31	4657	-20.79	23.6	0.06
339	SLU 37	466	31	4620	-20.55	23.53	0.06
339	SLU 38	465	31	4623	-20.57	23.48	0.06
339	SLU 39	464	31	4762	-20.75	23.53	0.06
339	SLU 40	463	31	4764	-20.77	23.49	0.06
339	SLU 41	478	31	4804	-21.09	24.19	0.06
339	SLU 42	477	31	4806	-21.1	24.14	0.06
339	SLU 43	399	29	4442	-19.8	20.38	0.06
339	SLU 44	397	29	4446	-19.82	20.3	0.06
339	SLU 45	414	30	4518	-20.35	21.14	0.06
339	SLU 46	413	30	4520	-20.37	21.1	0.06
339	SLU 47	411	30	4488	-20.16	20.96	0.06
339	SLU 48	428	31	4560	-20.69	21.79	0.06
339	SLU 49	427	31	4562	-20.7	21.75	0.06
339	SLU 50	426	30	4525	-20.47	21.68	0.06
339	SLU 51	425	30	4528	-20.48	21.63	0.06
339	SLU 52	458	32	4971	-21.86	23.36	0.06
339	SLU 53	476	33	5043	-22.39	24.2	0.07
339	SLU 54	475	33	5046	-22.4	24.15	0.07
339	SLU 55	472	33	5013	-22.19	24.01	0.07
339	SLU 56	490	34	5085	-22.72	24.85	0.07
339	SLU 57	489	34	5088	-22.74	24.8	0.07
339	SLU 58	488	33	5051	-22.5	24.73	0.07
339	SLU 59	487	33	5053	-22.52	24.69	0.07
339	SLU 60	487	34	5192	-22.7	24.74	0.07
339	SLU 61	485	34	5195	-22.72	24.7	0.07
339	SLU 62	500	34	5234	-23.04	25.39	0.07
339	SLU 63	499	34	5237	-23.05	25.35	0.07
339	SLU 64	454	32	4912	-21.87	23.14	0.06
339	SLU 65	452	32	4917	-21.9	23.07	0.06
339	SLU 66	470	33	4988	-22.42	23.91	0.07
339	SLU 67	469	33	4991	-22.44	23.87	0.07
339	SLU 68	466	33	4959	-22.23	23.72	0.07
339	SLU 69	484	34	5030	-22.76	24.56	0.07
339	SLU 70	483	34	5033	-22.77	24.52	0.07
339	SLU 71	482	33	4996	-22.54	24.45	0.07
339	SLU 72	481	33	4999	-22.55	24.4	0.07
339	SLU 73	514	36	5442	-23.93	26.13	0.07
339	SLU 74	531	36	5514	-24.46	26.96	0.07
339	SLU 75	530	36	5516	-24.47	26.92	0.07
339	SLU 76	528	36	5484	-24.26	26.78	0.07
339	SLU 77	545	37	5556	-24.79	27.61	0.07
339	SLU 78	544	37	5558	-24.81	27.57	0.07
339	SLU 79	543	36	5521	-24.57	27.5	0.07
339	SLU 80	542	36	5524	-24.59	27.46	0.07
339	SLU 81	542	37	5663	-24.78	27.51	0.07
339	SLU 82	541	37	5665	-24.79	27.46	0.07
339	SLU 83	556	37	5705	-25.11	28.16	0.07
339	SLU 84	555	37	5707	-25.13	28.11	0.07
339	SLE RA 1	337	24	3675	-16.37	17.19	0.05
339	SLE RA 2	336	24	3678	-16.38	17.15	0.05
339	SLE RA 3	348	25	3726	-16.74	17.7	0.05
339	SLE RA 4	347	25	3728	-16.75	17.68	0.05
339	SLE RA 5	345	25	3706	-16.61	17.58	0.05
339	SLE RA 6	357	25	3754	-16.96	18.14	0.05
339	SLE RA 7	356	25	3756	-16.97	18.11	0.05
339	SLE RA 8	356	25	3731	-16.81	18.06	0.05
339	SLE RA 9	355	25	3733	-16.82	18.03	0.05
339	SLE RA 10	377	26	4028	-17.74	19.18	0.05
339	SLE RA 11	389	27	4076	-18.09	19.74	0.05
339	SLE RA 12	388	27	4078	-18.1	19.71	0.05
339	SLE RA 13	386	27	4056	-17.96	19.62	0.05
339	SLE RA 14	398	27	4104	-18.32	20.18	0.05
339	SLE RA 15	397	27	4106	-18.33	20.15	0.05
339	SLE RA 16	397	27	4081	-18.17	20.1	0.05
339	SLE RA 17	396	27	4083	-18.18	20.07	0.05
339	SLE RA 18	396	27	4175	-18.31	20.1	0.05
339	SLE RA 19	395	27	4177	-18.32	20.07	0.05
339	SLE RA 20	405	28	4203	-18.53	20.54	0.05
339	SLE RA 21	404	28	4205	-18.54	20.51	0.05
339	SLE FR 1	337	24	3675	-16.37	17.19	0.05
339	SLE FR 2	337	24	3676	-16.37	17.18	0.05
339	SLE FR 3	341	24	3686	-16.46	17.37	0.05
339	SLE FR 4	354	25	3826	-16.95	18.06	0.05
339	SLE FR 5	358	25	3836	-17.04	18.24	0.05
339	SLE FR 6	366	26	3925	-17.34	18.65	0.05
339	SLE QP 1	337	24	3675	-16.37	17.19	0.05
339	SLE QP 2	355	25	3825	-16.95	18.07	0.05
339	SLD 1	1478	22	3358	-12.5	68.33	0.04
339	SLD 2	1478	22	3358	-12.5	68.33	0.04
339	SLD 3	1403	35	4007	-26.44	65.26	0.07
339	SLD 4	1403	35	4007	-26.44	65.26	0.07
339	SLD 5	807	5	2700	5.53	37.8	0
339	SLD 6	807	5	2700	5.53	37.8	0

Nodo	Cont.	Reazione a traslazione			Reazione a rotazione		
Ind.	N.br.	x	y	z	x	y	z
339	SLD 7	554	47	4865	-40.94	27.57	0.11
339	SLD 8	554	47	4865	-40.94	27.57	0.11
339	SLD 9	155	3	2786	7.05	8.57	-0.01
339	SLD 10	155	3	2786	7.05	8.57	-0.01
339	SLD 11	-97	45	4950	-39.43	-1.67	0.1
339	SLD 12	-97	45	4950	-39.43	-1.67	0.1
339	SLD 13	-693	15	3643	-7.45	-29.12	0.03
339	SLD 14	-693	15	3643	-7.45	-29.12	0.03
339	SLD 15	-769	28	4292	-21.4	-32.19	0.06
339	SLD 16	-769	28	4292	-21.4	-32.19	0.06
339	SLV 1	2915	19	2713	-6.47	132.58	0.03
339	SLV 2	2915	19	2713	-6.47	132.58	0.03
339	SLV 3	2733	48	4256	-39.29	125.17	0.11
339	SLV 4	2733	48	4256	-39.29	125.17	0.11
339	SLV 5	1400	-22	1151	35.97	63.66	-0.08
339	SLV 6	1400	-22	1151	35.97	63.66	-0.08
339	SLV 7	791	77	6295	-73.42	38.95	0.19
339	SLV 8	791	77	6295	-73.42	38.95	0.19
339	SLV 9	-82	-27	1355	39.53	-2.82	-0.09
339	SLV 10	-82	-27	1355	39.53	-2.82	-0.09
339	SLV 11	-691	72	6500	-69.87	-27.53	0.18
339	SLV 12	-691	72	6500	-69.87	-27.53	0.18
339	SLV 13	-2023	2	3394	5.39	-89.03	-0.01
339	SLV 14	-2023	2	3394	5.39	-89.03	-0.01
339	SLV 15	-2206	32	4938	-27.43	-96.45	0.07
339	SLV 16	-2206	32	4938	-27.43	-96.45	0.07
340	SLU 1	393	25	3247	-17.66	18.55	0.05
340	SLU 2	391	25	3251	-17.69	18.49	0.05
340	SLU 3	412	26	3316	-18.28	19.42	0.05
340	SLU 4	411	26	3318	-18.3	19.38	0.05
340	SLU 5	407	26	3290	-18.07	19.2	0.05
340	SLU 6	428	27	3355	-18.66	20.13	0.05
340	SLU 7	427	27	3357	-18.68	20.1	0.05
340	SLU 8	425	26	3325	-18.42	19.98	0.05
340	SLU 9	424	26	3327	-18.44	19.94	0.05
340	SLU 10	460	29	3733	-19.95	21.71	0.06
340	SLU 11	481	29	3798	-20.55	22.64	0.06
340	SLU 12	480	29	3800	-20.56	22.6	0.06
340	SLU 13	476	29	3771	-20.33	22.42	0.06
340	SLU 14	497	30	3836	-20.93	23.35	0.06
340	SLU 15	496	30	3839	-20.94	23.32	0.06
340	SLU 16	494	30	3806	-20.68	23.2	0.06
340	SLU 17	493	30	3809	-20.7	23.16	0.06
340	SLU 18	491	30	3935	-20.89	23.15	0.06
340	SLU 19	490	30	3938	-20.91	23.11	0.06
340	SLU 20	507	30	3974	-21.27	23.86	0.06
340	SLU 21	506	30	3976	-21.29	23.82	0.06
340	SLU 22	457	29	3676	-19.97	21.55	0.06
340	SLU 23	455	29	3680	-20	21.49	0.06
340	SLU 24	476	29	3745	-20.59	22.42	0.06
340	SLU 25	475	29	3747	-20.61	22.38	0.06
340	SLU 26	471	29	3719	-20.38	22.2	0.06
340	SLU 27	492	30	3784	-20.97	23.13	0.06
340	SLU 28	491	30	3786	-20.99	23.1	0.06
340	SLU 29	489	30	3754	-20.73	22.98	0.06
340	SLU 30	488	30	3756	-20.74	22.94	0.06
340	SLU 31	524	32	4162	-22.26	24.71	0.06
340	SLU 32	545	33	4227	-22.85	25.64	0.06
340	SLU 33	544	33	4229	-22.87	25.6	0.06
340	SLU 34	540	32	4200	-22.64	25.42	0.06
340	SLU 35	561	33	4265	-23.23	26.35	0.06
340	SLU 36	560	33	4267	-23.25	26.32	0.06
340	SLU 37	558	33	4235	-22.99	26.2	0.06
340	SLU 38	557	33	4238	-23	26.16	0.06
340	SLU 39	555	33	4364	-23.2	26.15	0.06
340	SLU 40	554	33	4367	-23.21	26.11	0.06
340	SLU 41	571	34	4403	-23.58	26.86	0.07
340	SLU 42	570	34	4405	-23.59	26.82	0.07
340	SLU 43	488	32	4075	-22.17	23.09	0.06
340	SLU 44	487	32	4078	-22.2	23.02	0.06
340	SLU 45	507	32	4143	-22.79	23.96	0.06
340	SLU 46	507	33	4145	-22.81	23.92	0.06
340	SLU 47	503	32	4117	-22.57	23.74	0.06
340	SLU 48	523	33	4182	-23.17	24.67	0.06
340	SLU 49	523	33	4184	-23.19	24.63	0.06
340	SLU 50	520	33	4152	-22.93	24.51	0.06
340	SLU 51	519	33	4154	-22.94	24.48	0.06
340	SLU 52	556	35	4560	-24.46	26.24	0.07
340	SLU 53	576	36	4625	-25.05	27.18	0.07
340	SLU 54	575	36	4627	-25.07	27.14	0.07
340	SLU 55	572	35	4599	-24.84	26.96	0.07
340	SLU 56	592	36	4664	-25.43	27.89	0.07
340	SLU 57	591	36	4666	-25.45	27.85	0.07
340	SLU 58	589	36	4634	-25.19	27.73	0.07
340	SLU 59	588	36	4636	-25.2	27.7	0.07
340	SLU 60	587	36	4763	-25.4	27.68	0.07
340	SLU 61	586	36	4765	-25.41	27.65	0.07
340	SLU 62	603	37	4801	-25.78	28.4	0.07
340	SLU 63	602	37	4803	-25.79	28.36	0.07
340	SLU 64	552	35	4504	-24.47	26.09	0.07
340	SLU 65	551	35	4507	-24.5	26.02	0.07

Nodo	Cont.	Reazione a traslazione			Reazione a rotazione		
Ind.	N.br.	x	y	z	x	y	z
340	SLU 66	572	36	4572	-25.1	26.96	0.07
340	SLU 67	571	36	4574	-25.12	26.92	0.07
340	SLU 68	567	36	4546	-24.88	26.74	0.07
340	SLU 69	588	36	4611	-25.48	27.67	0.07
340	SLU 70	587	36	4613	-25.5	27.63	0.07
340	SLU 71	585	36	4581	-25.23	27.51	0.07
340	SLU 72	584	36	4583	-25.25	27.48	0.07
340	SLU 73	620	38	4989	-26.76	29.24	0.07
340	SLU 74	641	39	5054	-27.36	30.18	0.08
340	SLU 75	640	39	5056	-27.38	30.14	0.08
340	SLU 76	636	39	5027	-27.14	29.96	0.08
340	SLU 77	657	40	5092	-27.74	30.89	0.08
340	SLU 78	656	40	5095	-27.76	30.85	0.08
340	SLU 79	654	39	5063	-27.49	30.73	0.08
340	SLU 80	653	39	5065	-27.51	30.7	0.08
340	SLU 81	651	40	5192	-27.7	30.68	0.08
340	SLU 82	650	40	5194	-27.72	30.65	0.08
340	SLU 83	667	40	5230	-28.08	31.4	0.08
340	SLU 84	666	40	5232	-28.1	31.36	0.08
340	SLE RA 1	411	26	3370	-18.32	19.41	0.05
340	SLE RA 2	410	26	3372	-18.34	19.36	0.05
340	SLE RA 3	424	27	3416	-18.74	19.99	0.05
340	SLE RA 4	423	27	3417	-18.75	19.96	0.05
340	SLE RA 5	421	27	3398	-18.59	19.84	0.05
340	SLE RA 6	434	27	3442	-18.99	20.46	0.05
340	SLE RA 7	434	27	3443	-19	20.44	0.05
340	SLE RA 8	432	27	3422	-18.83	20.36	0.05
340	SLE RA 9	432	27	3423	-18.84	20.33	0.05
340	SLE RA 10	456	28	3693	-19.85	21.51	0.06
340	SLE RA 11	470	29	3737	-20.24	22.13	0.06
340	SLE RA 12	469	29	3738	-20.25	22.11	0.06
340	SLE RA 13	467	29	3719	-20.1	21.99	0.06
340	SLE RA 14	480	29	3763	-20.5	22.61	0.06
340	SLE RA 15	480	29	3764	-20.51	22.58	0.06
340	SLE RA 16	478	29	3743	-20.33	22.5	0.06
340	SLE RA 17	478	29	3744	-20.34	22.48	0.06
340	SLE RA 18	477	29	3829	-20.47	22.47	0.06
340	SLE RA 19	476	29	3830	-20.48	22.45	0.06
340	SLE RA 20	487	30	3854	-20.73	22.95	0.06
340	SLE RA 21	487	30	3856	-20.74	22.92	0.06
340	SLE FR 1	411	26	3370	-18.32	19.41	0.05
340	SLE FR 2	411	26	3371	-18.32	19.4	0.05
340	SLE FR 3	415	26	3380	-18.42	19.6	0.05
340	SLE FR 4	430	27	3508	-18.97	20.32	0.05
340	SLE FR 5	435	27	3518	-19.07	20.52	0.05
340	SLE FR 6	444	28	3599	-19.4	20.94	0.05
340	SLE QP 1	411	26	3370	-18.32	19.41	0.05
340	SLE QP 2	431	27	3508	-18.97	20.33	0.05
340	SLD 1	1621	22	3099	-13.2	69.79	0.04
340	SLD 2	1621	22	3099	-13.2	69.79	0.04
340	SLD 3	1553	39	3671	-30.04	72.62	0.08
340	SLD 4	1553	39	3671	-30.04	72.62	0.08
340	SLD 5	890	0	2518	8.31	30.87	0
340	SLD 6	890	0	2518	8.31	30.87	0
340	SLD 7	665	56	4423	-47.84	40.31	0.11
340	SLD 8	665	56	4423	-47.84	40.31	0.11
340	SLD 9	196	-2	2592	9.91	0.35	-0.01
340	SLD 10	196	-2	2592	9.91	0.35	-0.01
340	SLD 11	-29	54	4497	-46.24	9.78	0.11
340	SLD 12	-29	54	4497	-46.24	9.78	0.11
340	SLD 13	-692	15	3345	-7.89	-31.97	0.03
340	SLD 14	-692	15	3345	-7.89	-31.97	0.03
340	SLD 15	-760	32	3916	-24.73	-29.13	0.06
340	SLD 16	-760	32	3916	-24.73	-29.13	0.06
340	SLV 1	3141	15	2536	-5.39	132.61	0.03
340	SLV 2	3141	15	2536	-5.39	132.61	0.03
340	SLV 3	2979	55	3894	-45.03	139.41	0.11
340	SLV 4	2979	55	3894	-45.03	139.41	0.11
340	SLV 5	1490	-37	1157	45.23	43.69	-0.08
340	SLV 6	1490	-37	1157	45.23	43.69	-0.08
340	SLV 7	949	96	5682	-86.9	66.37	0.19
340	SLV 8	949	96	5682	-86.9	66.37	0.19
340	SLV 9	-88	-42	1333	48.97	-25.72	-0.09
340	SLV 10	-88	-42	1333	48.97	-25.72	-0.09
340	SLV 11	-629	91	5858	-83.16	-3.04	0.18
340	SLV 12	-629	91	5858	-83.16	-3.04	0.18
340	SLV 13	-2118	-1	3122	7.1	-98.76	0
340	SLV 14	-2118	-1	3122	7.1	-98.76	0
340	SLV 15	-2280	39	4479	-32.54	-91.95	0.08
340	SLV 16	-2280	39	4479	-32.54	-91.95	0.08
341	SLU 1	520	25	3105	-18.26	23.82	0.06
341	SLU 2	519	25	3108	-18.29	23.76	0.06
341	SLU 3	544	26	3171	-18.92	24.9	0.06
341	SLU 4	543	26	3173	-18.94	24.86	0.06
341	SLU 5	538	26	3147	-18.69	24.61	0.06
341	SLU 6	563	27	3210	-19.32	25.75	0.06
341	SLU 7	562	27	3212	-19.34	25.71	0.06
341	SLU 8	558	26	3183	-19.07	25.51	0.06
341	SLU 9	557	26	3184	-19.09	25.48	0.06
341	SLU 10	605	28	3568	-20.61	27.71	0.06
341	SLU 11	630	29	3631	-21.24	28.85	0.07

Nodo	Cont.	Reazione a traslazione			Reazione a rotazione		
Ind.	N.br.	x	y	z	x	y	z
341	SLU 12	629	29	3633	-21.26	28.81	0.07
341	SLU 13	624	29	3607	-21.02	28.56	0.06
341	SLU 14	649	30	3670	-21.64	29.7	0.07
341	SLU 15	648	30	3672	-21.66	29.66	0.07
341	SLU 16	644	29	3643	-21.39	29.46	0.07
341	SLU 17	643	29	3644	-21.41	29.43	0.07
341	SLU 18	643	30	3762	-21.58	29.46	0.07
341	SLU 19	642	30	3764	-21.6	29.42	0.07
341	SLU 20	662	30	3801	-21.98	30.31	0.07
341	SLU 21	661	30	3803	-22	30.27	0.07
341	SLU 22	602	28	3514	-20.64	27.56	0.06
341	SLU 23	601	28	3517	-20.67	27.51	0.06
341	SLU 24	626	29	3580	-21.3	28.65	0.07
341	SLU 25	625	29	3582	-21.31	28.61	0.07
341	SLU 26	620	29	3556	-21.07	28.35	0.06
341	SLU 27	645	30	3619	-21.7	29.49	0.07
341	SLU 28	644	30	3621	-21.72	29.46	0.07
341	SLU 29	640	29	3592	-21.45	29.26	0.07
341	SLU 30	639	29	3593	-21.46	29.23	0.07
341	SLU 31	687	32	3977	-22.99	31.45	0.07
341	SLU 32	712	33	4040	-23.62	32.59	0.07
341	SLU 33	711	33	4042	-23.63	32.56	0.07
341	SLU 34	706	32	4016	-23.39	32.3	0.07
341	SLU 35	731	33	4079	-24.02	33.44	0.07
341	SLU 36	730	33	4081	-24.04	33.41	0.07
341	SLU 37	726	33	4052	-23.77	33.21	0.07
341	SLU 38	725	33	4053	-23.78	33.17	0.07
341	SLU 39	725	33	4171	-23.96	33.2	0.07
341	SLU 40	724	33	4173	-23.97	33.17	0.07
341	SLU 41	744	34	4210	-24.36	34.05	0.08
341	SLU 42	743	34	4212	-24.38	34.02	0.08
341	SLU 43	648	31	3896	-22.93	29.68	0.07
341	SLU 44	647	32	3899	-22.96	29.62	0.07
341	SLU 45	672	32	3963	-23.58	30.76	0.07
341	SLU 46	671	32	3964	-23.6	30.73	0.07
341	SLU 47	666	32	3938	-23.36	30.47	0.07
341	SLU 48	691	33	4001	-23.99	31.61	0.07
341	SLU 49	690	33	4003	-24	31.57	0.07
341	SLU 50	686	33	3974	-23.73	31.38	0.07
341	SLU 51	685	33	3976	-23.75	31.34	0.07
341	SLU 52	733	35	4359	-25.28	33.57	0.08
341	SLU 53	758	36	4423	-25.9	34.71	0.08
341	SLU 54	757	36	4424	-25.92	34.67	0.08
341	SLU 55	752	35	4398	-25.68	34.42	0.08
341	SLU 56	777	36	4462	-26.31	35.56	0.08
341	SLU 57	776	36	4463	-26.32	35.52	0.08
341	SLU 58	772	36	4434	-26.05	35.32	0.08
341	SLU 59	771	36	4436	-26.07	35.29	0.08
341	SLU 60	771	36	4554	-26.24	35.32	0.08
341	SLU 61	770	36	4555	-26.26	35.28	0.08
341	SLU 62	790	37	4592	-26.65	36.17	0.08
341	SLU 63	789	37	4594	-26.66	36.13	0.08
341	SLU 64	730	35	4305	-25.3	33.43	0.08
341	SLU 65	729	35	4308	-25.33	33.37	0.08
341	SLU 66	754	36	4372	-25.96	34.51	0.08
341	SLU 67	753	36	4373	-25.98	34.47	0.08
341	SLU 68	748	35	4347	-25.74	34.22	0.08
341	SLU 69	773	36	4410	-26.36	35.35	0.08
341	SLU 70	772	36	4412	-26.38	35.32	0.08
341	SLU 71	768	36	4383	-26.11	35.12	0.08
341	SLU 72	767	36	4385	-26.13	35.09	0.08
341	SLU 73	815	38	4768	-27.66	37.32	0.09
341	SLU 74	840	39	4832	-28.28	38.45	0.09
341	SLU 75	839	39	4833	-28.3	38.42	0.09
341	SLU 76	834	39	4807	-28.06	38.16	0.09
341	SLU 77	859	39	4870	-28.68	39.3	0.09
341	SLU 78	858	39	4872	-28.7	39.27	0.09
341	SLU 79	854	39	4843	-28.43	39.07	0.09
341	SLU 80	853	39	4845	-28.45	39.03	0.09
341	SLU 81	853	39	4963	-28.62	39.07	0.09
341	SLU 82	852	39	4964	-28.64	39.03	0.09
341	SLU 83	872	40	5001	-29.02	39.91	0.09
341	SLU 84	871	40	5003	-29.04	39.88	0.09
341	SLE RA 1	543	26	3222	-18.94	24.89	0.06
341	SLE RA 2	543	26	3224	-18.96	24.85	0.06
341	SLE RA 3	560	27	3266	-19.38	25.61	0.06
341	SLE RA 4	559	27	3267	-19.39	25.59	0.06
341	SLE RA 5	555	26	3250	-19.23	25.42	0.06
341	SLE RA 6	572	27	3292	-19.65	26.17	0.06
341	SLE RA 7	572	27	3293	-19.66	26.15	0.06
341	SLE RA 8	569	27	3274	-19.48	26.02	0.06
341	SLE RA 9	568	27	3275	-19.49	26	0.06
341	SLE RA 10	600	28	3530	-20.51	27.48	0.06
341	SLE RA 11	617	29	3573	-20.93	28.24	0.06
341	SLE RA 12	616	29	3574	-20.94	28.22	0.06
341	SLE RA 13	613	29	3556	-20.78	28.05	0.06
341	SLE RA 14	630	29	3599	-21.2	28.81	0.07
341	SLE RA 15	629	29	3600	-21.21	28.78	0.07
341	SLE RA 16	626	29	3580	-21.03	28.65	0.06
341	SLE RA 17	626	29	3581	-21.04	28.63	0.06
341	SLE RA 18	625	29	3660	-21.15	28.65	0.07

Nodo	Cont.	Reazione a traslazione			Reazione a rotazione		
Ind.	N.br.	x	y	z	x	y	z
341	SLE RA 19	625	29	3661	-21.17	28.63	0.07
341	SLE RA 20	638	29	3686	-21.42	29.21	0.07
341	SLE RA 21	638	30	3687	-21.43	29.19	0.07
341	SLE FR 1	543	26	3222	-18.94	24.89	0.06
341	SLE FR 2	543	26	3222	-18.95	24.88	0.06
341	SLE FR 3	549	26	3232	-19.05	25.11	0.06
341	SLE FR 4	568	27	3354	-19.61	26.01	0.06
341	SLE FR 5	573	27	3364	-19.71	26.24	0.06
341	SLE FR 6	584	28	3441	-20.05	26.77	0.06
341	SLE QP 1	543	26	3222	-18.94	24.89	0.06
341	SLE QP 2	568	27	3353	-19.61	26.02	0.06
341	SLD 1	1753	21	3205	-13.06	78.53	0.05
341	SLD 2	1753	21	3205	-13.06	78.53	0.05
341	SLD 3	1828	39	3734	-31.2	81.94	0.09
341	SLD 4	1828	39	3734	-31.2	81.94	0.09
341	SLD 5	808	-4	2507	9.87	36.6	0
341	SLD 6	808	-4	2507	9.87	36.6	0
341	SLD 7	1061	59	4270	-50.6	47.96	0.13
341	SLD 8	1061	59	4270	-50.6	47.96	0.13
341	SLD 9	75	-5	2437	11.38	4.07	-0.01
341	SLD 10	75	-5	2437	11.38	4.07	-0.01
341	SLD 11	328	57	4200	-49.08	15.43	0.12
341	SLD 12	328	57	4200	-49.08	15.43	0.12
341	SLD 13	-692	15	2972	-8.02	-29.91	0.03
341	SLD 14	-692	15	2972	-8.02	-29.91	0.03
341	SLD 15	-616	33	3501	-26.16	-26.5	0.07
341	SLD 16	-616	33	3501	-26.16	-26.5	0.07
341	SLV 1	3256	12	3000	-4.2	145.2	0.03
341	SLV 2	3256	12	3000	-4.2	145.2	0.03
341	SLV 3	3438	56	4255	-46.88	153.36	0.12
341	SLV 4	3438	56	4255	-46.88	153.36	0.12
341	SLV 5	1099	-45	1343	49.75	49.4	-0.09
341	SLV 6	1099	-45	1343	49.75	49.4	-0.09
341	SLV 7	1705	103	5528	-92.52	76.59	0.22
341	SLV 8	1705	103	5528	-92.52	76.59	0.22
341	SLV 9	-569	-49	1178	53.31	-24.55	-0.1
341	SLV 10	-569	-49	1178	53.31	-24.55	-0.1
341	SLV 11	37	99	5364	-88.96	2.63	0.21
341	SLV 12	37	99	5364	-88.96	2.63	0.21
341	SLV 13	-2302	-2	2451	7.67	-101.33	0
341	SLV 14	-2302	-2	2451	7.67	-101.33	0
341	SLV 15	-2120	42	3707	-35.01	-93.17	0.09
341	SLV 16	-2120	42	3707	-35.01	-93.17	0.09
342	SLU 1	643	25	3127	-17.93	27.87	0.06
342	SLU 2	642	25	3130	-17.96	27.82	0.06
342	SLU 3	672	25	3197	-18.58	29.08	0.06
342	SLU 4	671	25	3198	-18.6	29.05	0.06
342	SLU 5	664	25	3172	-18.36	28.74	0.06
342	SLU 6	693	26	3239	-18.99	30	0.06
342	SLU 7	692	26	3240	-19.01	29.97	0.06
342	SLU 8	686	26	3212	-18.74	29.7	0.06
342	SLU 9	686	26	3213	-18.76	29.68	0.06
342	SLU 10	745	28	3593	-20.23	32.24	0.06
342	SLU 11	774	29	3660	-20.85	33.5	0.06
342	SLU 12	773	29	3662	-20.87	33.48	0.06
342	SLU 13	766	28	3635	-20.64	33.16	0.06
342	SLU 14	795	29	3702	-21.26	34.42	0.07
342	SLU 15	795	29	3704	-21.28	34.39	0.07
342	SLU 16	789	29	3675	-21.02	34.13	0.06
342	SLU 17	788	29	3677	-21.03	34.1	0.06
342	SLU 18	790	29	3789	-21.18	34.19	0.07
342	SLU 19	789	29	3791	-21.19	34.16	0.07
342	SLU 20	811	30	3832	-21.58	35.1	0.07
342	SLU 21	810	30	3833	-21.6	35.08	0.07
342	SLU 22	742	28	3540	-20.26	32.12	0.06
342	SLU 23	741	28	3543	-20.29	32.07	0.06
342	SLU 24	770	29	3610	-20.91	33.33	0.06
342	SLU 25	769	29	3611	-20.93	33.3	0.06
342	SLU 26	762	28	3585	-20.69	32.99	0.06
342	SLU 27	791	29	3652	-21.32	34.25	0.07
342	SLU 28	791	29	3653	-21.34	34.22	0.07
342	SLU 29	785	29	3625	-21.07	33.95	0.06
342	SLU 30	784	29	3626	-21.09	33.92	0.06
342	SLU 31	843	31	4006	-22.56	36.49	0.07
342	SLU 32	872	32	4073	-23.18	37.75	0.07
342	SLU 33	872	32	4075	-23.2	37.72	0.07
342	SLU 34	865	32	4048	-22.96	37.41	0.07
342	SLU 35	894	32	4115	-23.59	38.67	0.07
342	SLU 36	893	32	4117	-23.61	38.64	0.07
342	SLU 37	887	32	4088	-23.34	38.37	0.07
342	SLU 38	886	32	4090	-23.36	38.35	0.07
342	SLU 39	888	32	4202	-23.5	38.43	0.07
342	SLU 40	887	32	4204	-23.52	38.41	0.07
342	SLU 41	909	33	4245	-23.91	39.35	0.07
342	SLU 42	909	33	4246	-23.93	39.32	0.07
342	SLU 43	803	31	3924	-22.51	34.77	0.07
342	SLU 44	802	31	3926	-22.54	34.72	0.07
342	SLU 45	831	32	3993	-23.16	35.98	0.07
342	SLU 46	830	32	3995	-23.18	35.96	0.07
342	SLU 47	823	31	3968	-22.94	35.64	0.07
342	SLU 48	852	32	4035	-23.57	36.9	0.07

Nodo	Cont.	Reazione a traslazione			Reazione a rotazione		
Ind.	N.br.	x	y	z	x	y	z
342	SLU 49	852	32	4037	-23.59	36.87	0.07
342	SLU 50	846	32	4008	-23.32	36.61	0.07
342	SLU 51	845	32	4009	-23.34	36.58	0.07
342	SLU 52	904	34	4390	-24.81	39.15	0.08
342	SLU 53	933	35	4457	-25.44	40.41	0.08
342	SLU 54	933	35	4458	-25.45	40.38	0.08
342	SLU 55	926	35	4432	-25.22	40.07	0.08
342	SLU 56	955	35	4499	-25.84	41.32	0.08
342	SLU 57	954	35	4500	-25.86	41.3	0.08
342	SLU 58	948	35	4472	-25.6	41.03	0.08
342	SLU 59	947	35	4473	-25.61	41	0.08
342	SLU 60	949	35	4586	-25.76	41.09	0.08
342	SLU 61	948	35	4587	-25.77	41.06	0.08
342	SLU 62	970	36	4628	-26.16	42.01	0.08
342	SLU 63	970	36	4630	-26.18	41.98	0.08
342	SLU 64	901	34	4337	-24.84	39.02	0.08
342	SLU 65	900	34	4339	-24.87	38.97	0.08
342	SLU 66	929	35	4406	-25.49	40.23	0.08
342	SLU 67	929	35	4408	-25.51	40.2	0.08
342	SLU 68	921	35	4381	-25.27	39.89	0.08
342	SLU 69	951	36	4448	-25.9	41.15	0.08
342	SLU 70	950	36	4450	-25.92	41.12	0.08
342	SLU 71	944	35	4421	-25.65	40.85	0.08
342	SLU 72	943	35	4422	-25.67	40.83	0.08
342	SLU 73	1002	37	4803	-27.14	43.4	0.08
342	SLU 74	1032	38	4870	-27.76	44.66	0.09
342	SLU 75	1031	38	4871	-27.78	44.63	0.09
342	SLU 76	1024	38	4845	-27.55	44.31	0.08
342	SLU 77	1053	39	4912	-28.17	45.57	0.09
342	SLU 78	1052	39	4913	-28.19	45.55	0.09
342	SLU 79	1046	38	4885	-27.92	45.28	0.09
342	SLU 80	1046	38	4886	-27.94	45.25	0.09
342	SLU 81	1047	39	4999	-28.08	45.34	0.09
342	SLU 82	1047	39	5000	-28.1	45.31	0.09
342	SLU 83	1069	39	5041	-28.49	46.26	0.09
342	SLU 84	1068	39	5043	-28.51	46.23	0.09
342	SLE RA 1	672	26	3245	-18.6	29.08	0.06
342	SLE RA 2	671	26	3247	-18.61	29.05	0.06
342	SLE RA 3	690	26	3292	-19.03	29.89	0.06
342	SLE RA 4	690	26	3292	-19.04	29.87	0.06
342	SLE RA 5	685	26	3275	-18.88	29.66	0.06
342	SLE RA 6	705	26	3320	-19.3	30.5	0.06
342	SLE RA 7	704	26	3321	-19.31	30.48	0.06
342	SLE RA 8	700	26	3301	-19.14	30.3	0.06
342	SLE RA 9	700	26	3302	-19.15	30.29	0.06
342	SLE RA 10	739	28	3556	-20.13	32	0.06
342	SLE RA 11	759	28	3601	-20.55	32.84	0.06
342	SLE RA 12	758	28	3602	-20.56	32.82	0.06
342	SLE RA 13	753	28	3584	-20.4	32.61	0.06
342	SLE RA 14	773	29	3629	-20.82	33.45	0.06
342	SLE RA 15	772	29	3630	-20.83	33.43	0.06
342	SLE RA 16	768	28	3610	-20.65	33.25	0.06
342	SLE RA 17	768	28	3611	-20.66	33.24	0.06
342	SLE RA 18	769	29	3687	-20.76	33.29	0.06
342	SLE RA 19	769	29	3688	-20.77	33.28	0.06
342	SLE RA 20	783	29	3715	-21.03	33.91	0.06
342	SLE RA 21	783	29	3716	-21.04	33.89	0.06
342	SLE FR 1	672	26	3245	-18.6	29.08	0.06
342	SLE FR 2	671	26	3246	-18.6	29.07	0.06
342	SLE FR 3	677	26	3256	-18.7	29.33	0.06
342	SLE FR 4	701	26	3378	-19.25	30.34	0.06
342	SLE FR 5	707	27	3389	-19.35	30.59	0.06
342	SLE FR 6	720	27	3466	-19.68	31.19	0.06
342	SLE QP 1	672	26	3245	-18.6	29.08	0.06
342	SLE QP 2	701	26	3378	-19.24	30.34	0.06
342	SLD 1	1890	20	3314	-12.8	82.37	0.05
342	SLD 2	1890	20	3314	-12.8	82.37	0.05
342	SLD 3	1985	38	3827	-30.42	86.56	0.08
342	SLD 4	1985	38	3827	-30.42	86.56	0.08
342	SLD 5	914	-3	2582	9.42	39.6	0
342	SLD 6	914	-3	2582	9.42	39.6	0
342	SLD 7	1230	57	4289	-49.33	53.56	0.12
342	SLD 8	1230	57	4289	-49.33	53.56	0.12
342	SLD 9	172	-4	2466	10.84	7.13	0
342	SLD 10	172	-4	2466	10.84	7.13	0
342	SLD 11	488	56	4173	-47.91	21.09	0.12
342	SLD 12	488	56	4173	-47.91	21.09	0.12
342	SLD 13	-584	15	2929	-8.07	-25.87	0.03
342	SLD 14	-584	15	2929	-8.07	-25.87	0.03
342	SLD 15	-489	33	3441	-25.69	-21.68	0.07
342	SLD 16	-489	33	3441	-25.69	-21.68	0.07
342	SLV 1	3399	11	3210	-4.06	148.36	0.03
342	SLV 2	3399	11	3210	-4.06	148.36	0.03
342	SLV 3	3626	54	4426	-45.53	158.36	0.12
342	SLV 4	3626	54	4426	-45.53	158.36	0.12
342	SLV 5	1167	-42	1484	48.2	50.57	-0.08
342	SLV 6	1167	-42	1484	48.2	50.57	-0.08
342	SLV 7	1922	99	5536	-90.02	83.93	0.2
342	SLV 8	1922	99	5536	-90.02	83.93	0.2
342	SLV 9	-520	-46	1220	51.53	-23.24	-0.09
342	SLV 10	-520	-46	1220	51.53	-23.24	-0.09

Nodo	Cont.	Reazione a traslazione			Reazione a rotazione		
Ind.	N.br.	x	y	z	x	y	z
342	SLV 11	235	95	5272	-86.69	10.12	0.19
342	SLV 12	235	95	5272	-86.69	10.12	0.19
342	SLV 13	-2224	-1	2329	7.04	-97.67	0
342	SLV 14	-2224	-1	2329	7.04	-97.67	0
342	SLV 15	-1998	41	3545	-34.42	-87.67	0.08
342	SLV 16	-1998	41	3545	-34.42	-87.67	0.08
343	SLU 1	731	23	3285	-16.61	31.31	0.05
343	SLU 2	730	24	3288	-16.63	31.27	0.05
343	SLU 3	762	24	3362	-17.22	32.62	0.06
343	SLU 4	762	24	3364	-17.23	32.6	0.06
343	SLU 5	753	24	3336	-17.02	32.24	0.05
343	SLU 6	785	25	3410	-17.61	33.6	0.06
343	SLU 7	784	25	3411	-17.62	33.57	0.06
343	SLU 8	777	25	3381	-17.38	33.25	0.06
343	SLU 9	776	25	3383	-17.4	33.23	0.06
343	SLU 10	844	27	3776	-18.73	36.15	0.06
343	SLU 11	876	27	3850	-19.32	37.5	0.06
343	SLU 12	875	27	3851	-19.34	37.48	0.06
343	SLU 13	867	27	3823	-19.12	37.12	0.06
343	SLU 14	898	28	3898	-19.71	38.48	0.06
343	SLU 15	898	28	3899	-19.72	38.45	0.06
343	SLU 16	890	28	3869	-19.48	38.13	0.06
343	SLU 17	890	28	3870	-19.5	38.11	0.06
343	SLU 18	894	28	3982	-19.61	38.28	0.06
343	SLU 19	893	28	3984	-19.62	38.25	0.06
343	SLU 20	916	28	4030	-20	39.25	0.06
343	SLU 21	916	28	4032	-20.01	39.23	0.06
343	SLU 22	841	27	3722	-18.76	36.01	0.06
343	SLU 23	840	27	3724	-18.78	35.98	0.06
343	SLU 24	872	27	3799	-19.37	37.33	0.06
343	SLU 25	871	27	3800	-19.39	37.31	0.06
343	SLU 26	863	27	3772	-19.17	36.95	0.06
343	SLU 27	895	28	3847	-19.76	38.31	0.06
343	SLU 28	894	28	3848	-19.78	38.28	0.06
343	SLU 29	886	28	3818	-19.54	37.96	0.06
343	SLU 30	886	28	3819	-19.55	37.94	0.06
343	SLU 31	954	30	4212	-20.89	40.86	0.07
343	SLU 32	986	31	4287	-21.48	42.21	0.07
343	SLU 33	985	31	4288	-21.49	42.19	0.07
343	SLU 34	977	30	4260	-21.28	41.83	0.07
343	SLU 35	1008	31	4335	-21.87	43.19	0.07
343	SLU 36	1008	31	4336	-21.88	43.16	0.07
343	SLU 37	1000	31	4306	-21.64	42.84	0.07
343	SLU 38	1000	31	4307	-21.65	42.82	0.07
343	SLU 39	1003	31	4419	-21.76	42.98	0.07
343	SLU 40	1003	31	4421	-21.78	42.96	0.07
343	SLU 41	1026	31	4467	-22.15	43.96	0.07
343	SLU 42	1026	32	4468	-22.17	43.93	0.07
343	SLU 43	913	29	4121	-20.85	39.08	0.07
343	SLU 44	912	30	4124	-20.87	39.05	0.07
343	SLU 45	944	30	4198	-21.46	40.4	0.07
343	SLU 46	943	30	4199	-21.48	40.38	0.07
343	SLU 47	935	30	4171	-21.26	40.02	0.07
343	SLU 48	967	31	4246	-21.85	41.37	0.07
343	SLU 49	966	31	4247	-21.86	41.35	0.07
343	SLU 50	958	31	4217	-21.62	41.03	0.07
343	SLU 51	958	31	4218	-21.64	41.01	0.07
343	SLU 52	1026	33	4611	-22.98	43.92	0.07
343	SLU 53	1058	33	4686	-23.57	45.28	0.08
343	SLU 54	1057	33	4687	-23.58	45.26	0.08
343	SLU 55	1049	33	4659	-23.36	44.9	0.07
343	SLU 56	1080	34	4734	-23.95	46.25	0.08
343	SLU 57	1080	34	4735	-23.97	46.23	0.08
343	SLU 58	1072	34	4705	-23.73	45.91	0.08
343	SLU 59	1072	34	4706	-23.74	45.88	0.08
343	SLU 60	1075	34	4818	-23.85	46.05	0.08
343	SLU 61	1075	34	4820	-23.87	46.03	0.08
343	SLU 62	1098	34	4866	-24.24	47.03	0.08
343	SLU 63	1098	34	4868	-24.26	47	0.08
343	SLU 64	1023	33	4558	-23	43.79	0.07
343	SLU 65	1022	33	4560	-23.03	43.75	0.07
343	SLU 66	1054	33	4635	-23.62	45.11	0.08
343	SLU 67	1053	33	4636	-23.63	45.09	0.08
343	SLU 68	1045	33	4608	-23.41	44.73	0.08
343	SLU 69	1076	34	4683	-24	46.08	0.08
343	SLU 70	1076	34	4684	-24.02	46.06	0.08
343	SLU 71	1068	34	4654	-23.78	45.74	0.08
343	SLU 72	1068	34	4655	-23.79	45.71	0.08
343	SLU 73	1136	36	5048	-25.13	48.63	0.08
343	SLU 74	1167	36	5123	-25.72	49.99	0.08
343	SLU 75	1167	37	5124	-25.73	49.97	0.08
343	SLU 76	1158	36	5096	-25.52	49.61	0.08
343	SLU 77	1190	37	5171	-26.11	50.96	0.08
343	SLU 78	1189	37	5172	-26.12	50.94	0.08
343	SLU 79	1182	37	5142	-25.88	50.62	0.08
343	SLU 80	1181	37	5143	-25.9	50.59	0.08
343	SLU 81	1185	37	5255	-26.01	50.76	0.08
343	SLU 82	1185	37	5256	-26.02	50.74	0.08
343	SLU 83	1208	37	5303	-26.4	51.73	0.08
343	SLU 84	1207	37	5304	-26.41	51.71	0.08
343	SLE RA 1	763	24	3410	-17.22	32.65	0.06

Nodo	Cont.	Reazione a traslazione			Reazione a rotazione		
Ind.	N.br.	x	y	z	x	y	z
343	SLE RA 2	762	24	3412	-17.24	32.63	0.06
343	SLE RA 3	783	25	3461	-17.63	33.53	0.06
343	SLE RA 4	783	25	3462	-17.64	33.52	0.06
343	SLE RA 5	777	25	3444	-17.5	33.27	0.06
343	SLE RA 6	798	25	3493	-17.89	34.18	0.06
343	SLE RA 7	798	25	3494	-17.9	34.16	0.06
343	SLE RA 8	793	25	3474	-17.74	33.95	0.06
343	SLE RA 9	793	25	3475	-17.75	33.93	0.06
343	SLE RA 10	838	26	3737	-18.64	35.88	0.06
343	SLE RA 11	859	27	3787	-19.03	36.78	0.06
343	SLE RA 12	859	27	3788	-19.04	36.77	0.06
343	SLE RA 13	853	27	3769	-18.9	36.53	0.06
343	SLE RA 14	874	27	3819	-19.29	37.43	0.06
343	SLE RA 15	874	27	3819	-19.3	37.42	0.06
343	SLE RA 16	869	27	3799	-19.14	37.2	0.06
343	SLE RA 17	868	27	3800	-19.15	37.19	0.06
343	SLE RA 18	871	27	3875	-19.22	37.3	0.06
343	SLE RA 19	871	27	3876	-19.23	37.28	0.06
343	SLE RA 20	886	28	3907	-19.48	37.95	0.06
343	SLE RA 21	886	28	3908	-19.49	37.93	0.06
343	SLE FR 1	763	24	3410	-17.22	32.65	0.06
343	SLE FR 2	763	24	3411	-17.22	32.65	0.06
343	SLE FR 3	769	25	3423	-17.32	32.91	0.06
343	SLE FR 4	795	25	3550	-17.82	34.04	0.06
343	SLE FR 5	801	25	3562	-17.93	34.3	0.06
343	SLE FR 6	817	26	3643	-18.22	34.97	0.06
343	SLE QP 1	763	24	3410	-17.22	32.65	0.06
343	SLE QP 2	795	25	3550	-17.82	34.05	0.06
343	SLD 1	1954	21	3589	-12.54	85.19	0.05
343	SLD 2	1954	21	3589	-12.54	85.19	0.05
343	SLD 3	2066	36	4100	-27.93	90.04	0.08
343	SLD 4	2066	36	4100	-27.93	90.04	0.08
343	SLD 5	972	2	2787	7.11	42.04	0.02
343	SLD 6	972	2	2787	7.11	42.04	0.02
343	SLD 7	1347	50	4490	-44.2	58.2	0.1
343	SLD 8	1347	50	4490	-44.2	58.2	0.1
343	SLD 9	243	0	2610	8.56	9.89	0.01
343	SLD 10	243	0	2610	8.56	9.89	0.01
343	SLD 11	618	49	4313	-42.75	26.05	0.1
343	SLD 12	618	49	4313	-42.75	26.05	0.1
343	SLD 13	-476	15	2999	-7.71	-21.95	0.04
343	SLD 14	-476	15	2999	-7.71	-21.95	0.04
343	SLD 15	-363	29	3510	-23.1	-17.1	0.06
343	SLD 16	-363	29	3510	-23.1	-17.1	0.06
343	SLV 1	3421	15	3614	-5.33	150.01	0.04
343	SLV 2	3421	15	3614	-5.33	150.01	0.04
343	SLV 3	3690	50	4826	-41.54	161.59	0.1
343	SLV 4	3690	50	4826	-41.54	161.59	0.1
343	SLV 5	1175	-30	1729	40.85	51.27	-0.04
343	SLV 6	1175	-30	1729	40.85	51.27	-0.04
343	SLV 7	2071	85	5772	-79.86	89.87	0.16
343	SLV 8	2071	85	5772	-79.86	89.87	0.16
343	SLV 9	-481	-34	1327	44.22	-21.78	-0.05
343	SLV 10	-481	-34	1327	44.22	-21.78	-0.05
343	SLV 11	415	80	5370	-76.49	16.82	0.15
343	SLV 12	415	80	5370	-76.49	16.82	0.15
343	SLV 13	-2100	1	2273	5.9	-93.5	0.01
343	SLV 14	-2100	1	2273	5.9	-93.5	0.01
343	SLV 15	-1831	35	3486	-30.31	-81.92	0.07
343	SLV 16	-1831	35	3486	-30.31	-81.92	0.07
344	SLU 1	752	20	3530	-13.86	31.85	0.03
344	SLU 2	751	20	3532	-13.88	31.83	0.03
344	SLU 3	783	21	3616	-14.38	33.17	0.03
344	SLU 4	782	21	3618	-14.39	33.15	0.03
344	SLU 5	774	20	3587	-14.21	32.78	0.03
344	SLU 6	805	21	3671	-14.71	34.12	0.03
344	SLU 7	805	21	3672	-14.73	34.1	0.03
344	SLU 8	797	21	3640	-14.53	33.76	0.03
344	SLU 9	796	21	3641	-14.54	33.74	0.03
344	SLU 10	865	22	4057	-15.63	36.65	0.04
344	SLU 11	897	23	4141	-16.13	37.99	0.04
344	SLU 12	896	23	4142	-16.14	37.98	0.04
344	SLU 13	887	23	4112	-15.96	37.6	0.04
344	SLU 14	919	24	4196	-16.46	38.94	0.04
344	SLU 15	919	24	4197	-16.48	38.93	0.04
344	SLU 16	910	23	4164	-16.28	38.58	0.04
344	SLU 17	910	23	4166	-16.29	38.56	0.04
344	SLU 18	914	24	4280	-16.36	38.75	0.04
344	SLU 19	914	24	4281	-16.37	38.73	0.04
344	SLU 20	937	24	4334	-16.69	39.7	0.04
344	SLU 21	936	24	4336	-16.71	39.68	0.04
344	SLU 22	863	22	4003	-15.65	36.55	0.04
344	SLU 23	862	22	4005	-15.67	36.52	0.04
344	SLU 24	894	23	4089	-16.17	37.86	0.04
344	SLU 25	893	23	4090	-16.18	37.85	0.04
344	SLU 26	884	23	4060	-16	37.47	0.04
344	SLU 27	916	24	4144	-16.51	38.81	0.04
344	SLU 28	916	24	4145	-16.52	38.8	0.04
344	SLU 29	907	23	4112	-16.32	38.45	0.04
344	SLU 30	907	23	4113	-16.33	38.43	0.04
344	SLU 31	976	25	4530	-17.42	41.34	0.04

Nodo	Cont.	Reazione a traslazione			Reazione a rotazione		
Ind.	N.br.	x	y	z	x	y	z
344	SLU 32	1007	26	4614	-17.92	42.69	0.04
344	SLU 33	1007	26	4615	-17.93	42.67	0.04
344	SLU 34	998	26	4584	-17.75	42.3	0.04
344	SLU 35	1030	26	4668	-18.26	43.64	0.04
344	SLU 36	1029	26	4670	-18.27	43.62	0.04
344	SLU 37	1021	26	4637	-18.07	43.27	0.04
344	SLU 38	1021	26	4638	-18.08	43.26	0.04
344	SLU 39	1025	26	4752	-18.15	43.44	0.04
344	SLU 40	1025	26	4754	-18.16	43.42	0.04
344	SLU 41	1047	27	4807	-18.49	44.39	0.04
344	SLU 42	1047	27	4808	-18.5	44.37	0.04
344	SLU 43	940	25	4427	-17.4	39.8	0.04
344	SLU 44	939	25	4429	-17.42	39.78	0.04
344	SLU 45	970	26	4513	-17.92	41.12	0.04
344	SLU 46	970	26	4515	-17.93	41.1	0.04
344	SLU 47	961	25	4484	-17.76	40.73	0.04
344	SLU 48	993	26	4568	-18.26	42.07	0.04
344	SLU 49	992	26	4569	-18.27	42.05	0.04
344	SLU 50	984	26	4536	-18.07	41.7	0.04
344	SLU 51	984	26	4538	-18.08	41.69	0.04
344	SLU 52	1053	28	4954	-19.17	44.6	0.04
344	SLU 53	1084	28	5038	-19.67	45.94	0.05
344	SLU 54	1084	28	5039	-19.69	45.92	0.05
344	SLU 55	1075	28	5009	-19.51	45.55	0.04
344	SLU 56	1107	29	5093	-20.01	46.89	0.05
344	SLU 57	1106	29	5094	-20.02	46.87	0.05
344	SLU 58	1098	28	5061	-19.82	46.53	0.05
344	SLU 59	1098	28	5063	-19.83	46.51	0.05
344	SLU 60	1102	29	5177	-19.9	46.69	0.05
344	SLU 61	1102	29	5178	-19.91	46.68	0.05
344	SLU 62	1124	29	5231	-20.24	47.64	0.05
344	SLU 63	1124	29	5233	-20.25	47.63	0.05
344	SLU 64	1050	28	4900	-19.19	44.5	0.04
344	SLU 65	1050	28	4902	-19.21	44.47	0.04
344	SLU 66	1081	28	4986	-19.71	45.81	0.05
344	SLU 67	1081	28	4987	-19.73	45.79	0.05
344	SLU 68	1072	28	4957	-19.55	45.42	0.04
344	SLU 69	1103	29	5041	-20.05	46.76	0.05
344	SLU 70	1103	29	5042	-20.06	46.74	0.05
344	SLU 71	1095	28	5009	-19.86	46.4	0.05
344	SLU 72	1095	29	5010	-19.87	46.38	0.05
344	SLU 73	1163	30	5427	-20.96	49.29	0.05
344	SLU 74	1195	31	5511	-21.47	50.63	0.05
344	SLU 75	1195	31	5512	-21.48	50.62	0.05
344	SLU 76	1186	31	5481	-21.3	50.24	0.05
344	SLU 77	1217	31	5565	-21.8	51.58	0.05
344	SLU 78	1217	31	5567	-21.81	51.57	0.05
344	SLU 79	1209	31	5534	-21.61	51.22	0.05
344	SLU 80	1208	31	5535	-21.62	51.2	0.05
344	SLU 81	1213	31	5649	-21.69	51.39	0.05
344	SLU 82	1212	31	5651	-21.71	51.37	0.05
344	SLU 83	1235	32	5704	-22.03	52.34	0.05
344	SLU 84	1235	32	5705	-22.04	52.32	0.05
344	SLE RA 1	784	21	3665	-14.37	33.2	0.03
344	SLE RA 2	783	21	3666	-14.38	33.18	0.03
344	SLE RA 3	804	21	3723	-14.72	34.07	0.03
344	SLE RA 4	804	21	3723	-14.73	34.06	0.03
344	SLE RA 5	798	21	3703	-14.61	33.81	0.03
344	SLE RA 6	819	21	3759	-14.94	34.71	0.03
344	SLE RA 7	819	21	3760	-14.95	34.69	0.03
344	SLE RA 8	813	21	3738	-14.82	34.46	0.03
344	SLE RA 9	813	21	3739	-14.82	34.45	0.03
344	SLE RA 10	859	22	4016	-15.55	36.39	0.04
344	SLE RA 11	880	23	4072	-15.89	37.29	0.04
344	SLE RA 12	880	23	4073	-15.89	37.28	0.04
344	SLE RA 13	874	23	4053	-15.77	37.03	0.04
344	SLE RA 14	895	23	4109	-16.11	37.92	0.04
344	SLE RA 15	895	23	4110	-16.12	37.91	0.04
344	SLE RA 16	889	23	4088	-15.98	37.68	0.04
344	SLE RA 17	889	23	4089	-15.99	37.67	0.04
344	SLE RA 18	892	23	4165	-16.04	37.79	0.04
344	SLE RA 19	892	23	4166	-16.05	37.78	0.04
344	SLE RA 20	907	23	4201	-16.26	38.42	0.04
344	SLE RA 21	907	23	4202	-16.27	38.41	0.04
344	SLE FR 1	784	21	3665	-14.37	33.2	0.03
344	SLE FR 2	783	21	3665	-14.37	33.19	0.03
344	SLE FR 3	789	21	3680	-14.46	33.45	0.03
344	SLE FR 4	816	21	3815	-14.87	34.57	0.03
344	SLE FR 5	822	21	3830	-14.96	34.83	0.03
344	SLE FR 6	838	22	3915	-15.2	35.49	0.03
344	SLE QP 1	784	21	3665	-14.37	33.2	0.03
344	SLE QP 2	816	21	3815	-14.87	34.57	0.03
344	SLD 1	1912	21	3918	-11.55	82.86	0.04
344	SLD 2	1912	21	3918	-11.55	82.86	0.04
344	SLD 3	2038	30	4440	-23.38	88.22	0.05
344	SLD 4	2038	30	4440	-23.38	88.22	0.05
344	SLD 5	955	7	3055	4.07	40.92	0.02
344	SLD 6	955	7	3055	4.07	40.92	0.02
344	SLD 7	1372	38	4793	-35.37	58.81	0.05
344	SLD 8	1372	38	4793	-35.37	58.81	0.05
344	SLD 9	260	5	2837	5.63	10.34	0.02

Nodo	Cont.	Reazione a traslazione			Reazione a rotazione		
Ind.	N.br.	x	y	z	x	y	z
344	SLD 10	260	5	2837	5.63	10.34	0.02
344	SLD 11	677	35	4575	-33.81	28.23	0.04
344	SLD 12	677	35	4575	-33.81	28.23	0.04
344	SLD 13	-406	13	3190	-6.36	-19.08	0.02
344	SLD 14	-406	13	3190	-6.36	-19.08	0.02
344	SLD 15	-280	22	3712	-18.19	-13.71	0.03
344	SLD 16	-280	22	3712	-18.19	-13.71	0.03
344	SLV 1	3300	20	4021	-6.95	144	0.05
344	SLV 2	3300	20	4021	-6.95	144	0.05
344	SLV 3	3600	41	5260	-34.79	156.82	0.06
344	SLV 4	3600	41	5260	-34.79	156.82	0.06
344	SLV 5	1108	-12	1997	29.73	47.96	0.01
344	SLV 6	1108	-12	1997	29.73	47.96	0.01
344	SLV 7	2105	60	6129	-63.07	90.69	0.07
344	SLV 8	2105	60	6129	-63.07	90.69	0.07
344	SLV 9	-473	-17	1501	33.33	-21.54	0
344	SLV 10	-473	-17	1501	33.33	-21.54	0
344	SLV 11	524	54	5633	-59.47	21.18	0.06
344	SLV 12	524	54	5633	-59.47	21.18	0.06
344	SLV 13	-1967	1	2370	5.05	-87.67	0
344	SLV 14	-1967	1	2370	5.05	-87.67	0
344	SLV 15	-1668	23	3609	-22.79	-74.85	0.02
344	SLV 16	-1668	23	3609	-22.79	-74.85	0.02
345	SLU 1	696	12	3791	-9.4	29.17	0.01
345	SLU 2	696	12	3794	-9.42	29.14	0.01
345	SLU 3	725	12	3887	-9.77	30.38	0.01
345	SLU 4	725	12	3889	-9.78	30.36	0.01
345	SLU 5	716	12	3855	-9.65	30.01	0.01
345	SLU 6	745	12	3949	-10	31.24	0.01
345	SLU 7	745	12	3950	-10.01	31.23	0.01
345	SLU 8	737	12	3914	-9.88	30.9	0.01
345	SLU 9	737	12	3915	-9.89	30.89	0.01
345	SLU 10	798	13	4356	-10.58	33.42	0.01
345	SLU 11	827	13	4449	-10.93	34.65	0.01
345	SLU 12	826	13	4451	-10.94	34.64	0.01
345	SLU 13	818	13	4417	-10.82	34.29	0.01
345	SLU 14	847	14	4511	-11.17	35.52	0.01
345	SLU 15	847	14	4512	-11.18	35.51	0.01
345	SLU 16	839	14	4476	-11.05	35.18	0.01
345	SLU 17	839	14	4477	-11.05	35.16	0.01
345	SLU 18	842	14	4594	-11.07	35.27	0.01
345	SLU 19	841	14	4596	-11.08	35.26	0.01
345	SLU 20	862	14	4656	-11.31	36.14	0.01
345	SLU 21	862	14	4657	-11.32	36.13	0.01
345	SLU 22	796	13	4301	-10.6	33.38	0.01
345	SLU 23	796	13	4303	-10.61	33.35	0.01
345	SLU 24	825	13	4397	-10.96	34.58	0.01
345	SLU 25	825	13	4398	-10.97	34.57	0.01
345	SLU 26	817	13	4364	-10.85	34.22	0.01
345	SLU 27	846	14	4458	-11.2	35.45	0.01
345	SLU 28	845	14	4459	-11.21	35.44	0.01
345	SLU 29	837	14	4423	-11.08	35.11	0.01
345	SLU 30	837	14	4425	-11.08	35.1	0.01
345	SLU 31	898	14	4865	-11.78	37.63	0.01
345	SLU 32	927	15	4959	-12.13	38.86	0.01
345	SLU 33	927	15	4960	-12.14	38.85	0.01
345	SLU 34	918	15	4926	-12.02	38.5	0.01
345	SLU 35	947	15	5020	-12.37	39.73	0.01
345	SLU 36	947	15	5021	-12.38	39.71	0.01
345	SLU 37	939	15	4985	-12.24	39.39	0.01
345	SLU 38	939	15	4987	-12.25	39.37	0.01
345	SLU 39	942	15	5104	-12.27	39.48	0.01
345	SLU 40	942	15	5105	-12.27	39.47	0.01
345	SLU 41	962	15	5165	-12.5	40.35	0.01
345	SLU 42	962	15	5166	-12.51	40.34	0.01
345	SLU 43	871	14	4754	-11.82	36.47	0.01
345	SLU 44	870	14	4756	-11.83	36.45	0.01
345	SLU 45	899	15	4850	-12.18	37.68	0.01
345	SLU 46	899	15	4851	-12.19	37.67	0.01
345	SLU 47	891	15	4818	-12.07	37.32	0.01
345	SLU 48	920	15	4911	-12.42	38.55	0.01
345	SLU 49	920	15	4913	-12.42	38.54	0.01
345	SLU 50	912	15	4877	-12.29	38.21	0.01
345	SLU 51	911	15	4878	-12.3	38.2	0.01
345	SLU 52	972	16	5318	-13	40.73	0.01
345	SLU 53	1001	16	5412	-13.35	41.96	0.01
345	SLU 54	1001	16	5413	-13.35	41.94	0.01
345	SLU 55	993	16	5380	-13.23	41.59	0.01
345	SLU 56	1022	17	5473	-13.58	42.83	0.01
345	SLU 57	1021	17	5475	-13.59	42.81	0.01
345	SLU 58	1014	17	5439	-13.46	42.48	0.01
345	SLU 59	1013	17	5440	-13.46	42.47	0.01
345	SLU 60	1016	17	5557	-13.48	42.58	0.01
345	SLU 61	1016	17	5558	-13.49	42.57	0.01
345	SLU 62	1037	17	5618	-13.72	43.45	0.01
345	SLU 63	1036	17	5620	-13.73	43.44	0.01
345	SLU 64	971	16	5263	-13.01	40.68	0.01
345	SLU 65	971	16	5266	-13.02	40.66	0.01
345	SLU 66	1000	16	5359	-13.37	41.89	0.01
345	SLU 67	999	16	5361	-13.38	41.88	0.01
345	SLU 68	991	16	5327	-13.26	41.53	0.01

Nodo	Cont.	Reazione a traslazione			Reazione a rotazione		
Ind.	N.br.	x	y	z	x	y	z
345	SLU 69	1020	17	5421	-13.61	42.76	0.01
345	SLU 70	1020	17	5422	-13.62	42.75	0.01
345	SLU 71	1012	17	5386	-13.49	42.42	0.01
345	SLU 72	1012	17	5387	-13.49	42.41	0.01
345	SLU 73	1072	17	5828	-14.19	44.94	0.01
345	SLU 74	1101	18	5921	-14.54	46.17	0.01
345	SLU 75	1101	18	5923	-14.55	46.15	0.01
345	SLU 76	1093	18	5889	-14.43	45.8	0.01
345	SLU 77	1122	18	5983	-14.78	47.03	0.01
345	SLU 78	1122	18	5984	-14.79	47.02	0.01
345	SLU 79	1114	18	5948	-14.65	46.69	0.01
345	SLU 80	1113	18	5950	-14.66	46.68	0.01
345	SLU 81	1116	18	6066	-14.68	46.79	0.01
345	SLU 82	1116	18	6068	-14.69	46.78	0.01
345	SLU 83	1137	18	6128	-14.92	47.66	0.01
345	SLU 84	1137	18	6129	-14.92	47.64	0.01
345	SLE RA 1	725	12	3937	-9.75	30.37	0.01
345	SLE RA 2	725	12	3938	-9.75	30.35	0.01
345	SLE RA 3	744	12	4001	-9.99	31.18	0.01
345	SLE RA 4	744	12	4002	-9.99	31.17	0.01
345	SLE RA 5	738	12	3979	-9.91	30.93	0.01
345	SLE RA 6	758	12	4042	-10.15	31.75	0.01
345	SLE RA 7	757	12	4043	-10.15	31.74	0.01
345	SLE RA 8	752	12	4019	-10.06	31.53	0.01
345	SLE RA 9	752	12	4020	-10.07	31.52	0.01
345	SLE RA 10	792	13	4313	-10.53	33.2	0.01
345	SLE RA 11	812	13	4375	-10.77	34.03	0.01
345	SLE RA 12	812	13	4376	-10.77	34.02	0.01
345	SLE RA 13	806	13	4354	-10.69	33.78	0.01
345	SLE RA 14	825	13	4416	-10.92	34.6	0.01
345	SLE RA 15	825	13	4417	-10.93	34.59	0.01
345	SLE RA 16	820	13	4393	-10.84	34.38	0.01
345	SLE RA 17	820	13	4394	-10.85	34.37	0.01
345	SLE RA 18	822	13	4472	-10.86	34.44	0.01
345	SLE RA 19	822	13	4473	-10.86	34.43	0.01
345	SLE RA 20	835	14	4513	-11.02	35.02	0.01
345	SLE RA 21	835	14	4514	-11.02	35.01	0.01
345	SLE FR 1	725	12	3937	-9.75	30.37	0.01
345	SLE FR 2	725	12	3937	-9.75	30.37	0.01
345	SLE FR 3	730	12	3953	-9.81	30.6	0.01
345	SLE FR 4	754	12	4098	-10.08	31.59	0.01
345	SLE FR 5	759	12	4114	-10.14	31.82	0.01
345	SLE FR 6	773	13	4204	-10.3	32.41	0.01
345	SLE QP 1	725	12	3937	-9.75	30.37	0.01
345	SLE QP 2	754	12	4097	-10.08	31.59	0.01
345	SLD 1	1794	15	4201	-8.87	77.74	0.01
345	SLD 2	1794	15	4201	-8.87	77.74	0.01
345	SLD 3	1921	19	4748	-16.51	83.11	0.02
345	SLD 4	1921	19	4748	-16.51	83.11	0.02
345	SLD 5	872	9	3300	1.87	37.29	-0.02
345	SLD 6	872	9	3300	1.87	37.29	-0.02
345	SLD 7	1298	19	5121	-23.6	55.19	0.03
345	SLD 8	1298	19	5121	-23.6	55.19	0.03
345	SLD 9	210	6	3074	3.44	8	-0.02
345	SLD 10	210	6	3074	3.44	8	-0.02
345	SLD 11	636	16	4895	-22.03	25.89	0.03
345	SLD 12	636	16	4895	-22.03	25.89	0.03
345	SLD 13	-413	6	3447	-3.65	-19.92	-0.01
345	SLD 14	-413	6	3447	-3.65	-19.92	-0.01
345	SLD 15	-286	9	3993	-11.29	-14.56	0.01
345	SLD 16	-286	9	3993	-11.29	-14.56	0.01
345	SLV 1	3109	19	4304	-7.11	136.16	0.01
345	SLV 2	3109	19	4304	-7.11	136.16	0.01
345	SLV 3	3414	27	5603	-25.09	148.99	0.04
345	SLV 4	3414	27	5603	-25.09	148.99	0.04
345	SLV 5	998	3	2188	18.08	43.51	-0.05
345	SLV 6	998	3	2188	18.08	43.51	-0.05
345	SLV 7	2015	28	6520	-41.85	86.26	0.07
345	SLV 8	2015	28	6520	-41.85	86.26	0.07
345	SLV 9	-507	-3	1674	21.7	-23.08	-0.06
345	SLV 10	-507	-3	1674	21.7	-23.08	-0.06
345	SLV 11	510	22	6007	-38.24	19.67	0.06
345	SLV 12	510	22	6007	-38.24	19.67	0.06
345	SLV 13	-1906	-2	2592	4.93	-85.81	-0.03
345	SLV 14	-1906	-2	2592	4.93	-85.81	-0.03
345	SLV 15	-1601	5	3891	-13.05	-72.98	0
345	SLV 16	-1601	5	3891	-13.05	-72.98	0
346	SLU 1	594	-2	4021	-3.77	24.8	-0.01
346	SLU 2	593	-2	4024	-3.78	24.78	-0.01
346	SLU 3	619	-2	4126	-3.93	25.84	-0.01
346	SLU 4	618	-2	4127	-3.93	25.83	-0.01
346	SLU 5	611	-2	4091	-3.89	25.53	-0.01
346	SLU 6	636	-2	4193	-4.04	26.59	-0.01
346	SLU 7	636	-2	4194	-4.05	26.58	-0.01
346	SLU 8	629	-2	4155	-3.99	26.3	-0.01
346	SLU 9	629	-2	4157	-4	26.29	-0.01
346	SLU 10	677	-2	4616	-4.2	28.28	-0.01
346	SLU 11	702	-2	4718	-4.35	29.34	-0.01
346	SLU 12	702	-2	4719	-4.36	29.33	-0.01
346	SLU 13	694	-2	4683	-4.31	29.03	-0.01
346	SLU 14	719	-2	4785	-4.46	30.09	-0.01

Nodo	Cont.	Reazione a traslazione			Reazione a rotazione		
Ind.	N.br.	x	y	z	x	y	z
346	SLU 15	719	-2	4786	-4.47	30.08	-0.01
346	SLU 16	712	-2	4747	-4.41	29.8	-0.01
346	SLU 17	712	-2	4749	-4.42	29.79	-0.01
346	SLU 18	713	-3	4867	-4.37	29.8	-0.01
346	SLU 19	712	-3	4869	-4.37	29.79	-0.01
346	SLU 20	730	-3	4934	-4.48	30.55	-0.01
346	SLU 21	730	-3	4936	-4.49	30.54	-0.01
346	SLU 22	677	-2	4561	-4.21	28.3	-0.01
346	SLU 23	677	-2	4564	-4.22	28.28	-0.01
346	SLU 24	702	-2	4666	-4.37	29.34	-0.01
346	SLU 25	702	-2	4667	-4.38	29.33	-0.01
346	SLU 26	694	-2	4631	-4.33	29.03	-0.01
346	SLU 27	720	-2	4732	-4.48	30.09	-0.01
346	SLU 28	719	-2	4734	-4.49	30.08	-0.01
346	SLU 29	712	-2	4695	-4.43	29.79	-0.01
346	SLU 30	712	-2	4697	-4.44	29.78	-0.01
346	SLU 31	760	-3	5156	-4.64	31.78	-0.02
346	SLU 32	785	-3	5258	-4.79	32.84	-0.02
346	SLU 33	785	-3	5259	-4.8	32.83	-0.02
346	SLU 34	778	-3	5223	-4.75	32.53	-0.02
346	SLU 35	803	-3	5324	-4.9	33.59	-0.02
346	SLU 36	803	-3	5326	-4.91	33.58	-0.02
346	SLU 37	796	-3	5287	-4.85	33.29	-0.02
346	SLU 38	795	-3	5289	-4.86	33.28	-0.02
346	SLU 39	796	-3	5407	-4.81	33.3	-0.02
346	SLU 40	796	-3	5409	-4.82	33.29	-0.02
346	SLU 41	814	-3	5474	-4.92	34.05	-0.02
346	SLU 42	813	-3	5475	-4.93	34.04	-0.02
346	SLU 43	743	-2	5043	-4.75	31.04	-0.01
346	SLU 44	743	-2	5046	-4.75	31.02	-0.01
346	SLU 45	768	-2	5147	-4.91	32.09	-0.02
346	SLU 46	768	-2	5149	-4.91	32.07	-0.02
346	SLU 47	761	-2	5112	-4.87	31.77	-0.02
346	SLU 48	786	-2	5214	-5.02	32.83	-0.02
346	SLU 49	786	-2	5215	-5.03	32.82	-0.02
346	SLU 50	779	-2	5176	-4.97	32.54	-0.02
346	SLU 51	779	-2	5178	-4.97	32.53	-0.02
346	SLU 52	826	-3	5638	-5.18	34.52	-0.02
346	SLU 53	851	-3	5739	-5.33	35.59	-0.02
346	SLU 54	851	-3	5741	-5.33	35.58	-0.02
346	SLU 55	844	-3	5704	-5.29	35.27	-0.02
346	SLU 56	869	-3	5806	-5.44	36.33	-0.02
346	SLU 57	869	-3	5807	-5.45	36.32	-0.02
346	SLU 58	862	-3	5768	-5.39	36.04	-0.02
346	SLU 59	862	-3	5770	-5.4	36.03	-0.02
346	SLU 60	862	-3	5889	-5.35	36.04	-0.02
346	SLU 61	862	-3	5890	-5.35	36.03	-0.02
346	SLU 62	880	-3	5955	-5.46	36.79	-0.02
346	SLU 63	880	-3	5957	-5.46	36.78	-0.02
346	SLU 64	827	-3	5583	-5.19	34.54	-0.02
346	SLU 65	826	-3	5585	-5.2	34.52	-0.02
346	SLU 66	851	-3	5687	-5.35	35.58	-0.02
346	SLU 67	851	-3	5688	-5.36	35.57	-0.02
346	SLU 68	844	-3	5652	-5.31	35.27	-0.02
346	SLU 69	869	-3	5754	-5.46	36.33	-0.02
346	SLU 70	869	-3	5755	-5.47	36.32	-0.02
346	SLU 71	862	-3	5716	-5.41	36.03	-0.02
346	SLU 72	862	-3	5718	-5.42	36.02	-0.02
346	SLU 73	909	-3	6177	-5.62	38.02	-0.02
346	SLU 74	935	-3	6279	-5.77	39.08	-0.02
346	SLU 75	934	-3	6281	-5.78	39.07	-0.02
346	SLU 76	927	-3	6244	-5.73	38.77	-0.02
346	SLU 77	952	-3	6346	-5.88	39.83	-0.02
346	SLU 78	952	-3	6347	-5.89	39.82	-0.02
346	SLU 79	945	-3	6308	-5.83	39.54	-0.02
346	SLU 80	945	-3	6310	-5.84	39.52	-0.02
346	SLU 81	945	-3	6428	-5.79	39.54	-0.02
346	SLU 82	945	-3	6430	-5.8	39.53	-0.02
346	SLU 83	963	-3	6495	-5.9	40.29	-0.02
346	SLU 84	963	-3	6497	-5.91	40.28	-0.02
346	SLE RA 1	618	-2	4176	-3.9	25.8	-0.01
346	SLE RA 2	617	-2	4178	-3.9	25.79	-0.01
346	SLE RA 3	634	-2	4245	-4	26.5	-0.01
346	SLE RA 4	634	-2	4246	-4.01	26.49	-0.01
346	SLE RA 5	629	-2	4222	-3.97	26.29	-0.01
346	SLE RA 6	646	-2	4290	-4.08	26.99	-0.01
346	SLE RA 7	646	-2	4291	-4.08	26.99	-0.01
346	SLE RA 8	641	-2	4265	-4.04	26.8	-0.01
346	SLE RA 9	641	-2	4266	-4.05	26.79	-0.01
346	SLE RA 10	673	-2	4572	-4.18	28.12	-0.01
346	SLE RA 11	690	-2	4640	-4.28	28.83	-0.01
346	SLE RA 12	689	-2	4641	-4.29	28.82	-0.01
346	SLE RA 13	685	-2	4617	-4.25	28.62	-0.01
346	SLE RA 14	701	-2	4684	-4.36	29.33	-0.01
346	SLE RA 15	701	-2	4685	-4.36	29.32	-0.01
346	SLE RA 16	697	-2	4659	-4.32	29.13	-0.01
346	SLE RA 17	696	-2	4661	-4.33	29.12	-0.01
346	SLE RA 18	697	-2	4740	-4.3	29.13	-0.01
346	SLE RA 19	697	-2	4741	-4.3	29.13	-0.01
346	SLE RA 20	709	-2	4784	-4.37	29.63	-0.01
346	SLE RA 21	708	-2	4785	-4.37	29.63	-0.01

Nodo	Cont.	Reazione a traslazione			Reazione a rotazione		
Ind.	N.br.	x	y	z	x	y	z
346	SLE FR 1	618	-2	4176	-3.9	25.8	-0.01
346	SLE FR 2	618	-2	4176	-3.9	25.8	-0.01
346	SLE FR 3	622	-2	4194	-3.93	26	-0.01
346	SLE FR 4	641	-2	4345	-4.02	26.8	-0.01
346	SLE FR 5	646	-2	4363	-4.05	27	-0.01
346	SLE FR 6	657	-2	4458	-4.1	27.47	-0.01
346	SLE QP 1	618	-2	4176	-3.9	25.8	-0.01
346	SLE QP 2	641	-2	4345	-4.02	26.8	-0.01
346	SLD 1	1637	-5	4397	-4.29	70.6	0
346	SLD 2	1637	-5	4397	-4.29	70.6	0
346	SLD 3	1761	-9	4985	-8.14	75.69	-0.02
346	SLD 4	1761	-9	4985	-8.14	75.69	-0.02
346	SLD 5	751	3	3470	1.75	32.22	0.02
346	SLD 6	751	3	3470	1.75	32.22	0.02
346	SLD 7	1166	-11	5428	-11.1	49.19	-0.04
346	SLD 8	1166	-11	5428	-11.1	49.19	-0.04
346	SLD 9	116	6	3262	3.07	4.41	0.02
346	SLD 10	116	6	3262	3.07	4.41	0.02
346	SLD 11	532	-8	5220	-9.78	21.38	-0.05
346	SLD 12	532	-8	5220	-9.78	21.38	-0.05
346	SLD 13	-479	4	3705	0.11	-22.09	-0.01
346	SLD 14	-479	4	3705	0.11	-22.09	-0.01
346	SLD 15	-354	0	4293	-3.75	-17	-0.03
346	SLD 16	-354	0	4293	-3.75	-17	-0.03
346	SLV 1	2897	-8	4432	-4.55	126.08	0.03
346	SLV 2	2897	-8	4432	-4.55	126.08	0.03
346	SLV 3	3195	-18	5832	-13.63	138.24	-0.02
346	SLV 4	3195	-18	5832	-13.63	138.24	-0.02
346	SLV 5	866	11	2249	9.59	38.14	0.07
346	SLV 6	866	11	2249	9.59	38.14	0.07
346	SLV 7	1859	-22	6913	-20.67	78.67	-0.09
346	SLV 8	1859	-22	6913	-20.67	78.67	-0.09
346	SLV 9	-577	18	1776	12.64	-25.07	0.06
346	SLV 10	-577	18	1776	12.64	-25.07	0.06
346	SLV 11	417	-16	6441	-17.62	15.46	-0.1
346	SLV 12	417	-16	6441	-17.62	15.46	-0.1
346	SLV 13	-1912	13	2858	5.6	-84.64	0
346	SLV 14	-1912	13	2858	5.6	-84.64	0
346	SLV 15	-1614	3	4257	-3.48	-72.48	-0.05
346	SLV 16	-1614	3	4257	-3.48	-72.48	-0.05
347	SLU 1	471	-17	4243	1.13	19.17	-0.03
347	SLU 2	470	-17	4246	1.13	19.15	-0.03
347	SLU 3	491	-17	4355	1.14	20.01	-0.03
347	SLU 4	491	-18	4357	1.14	20	-0.03
347	SLU 5	485	-17	4318	1.12	19.76	-0.03
347	SLU 6	505	-18	4426	1.13	20.61	-0.03
347	SLU 7	505	-18	4428	1.13	20.6	-0.03
347	SLU 8	500	-18	4386	1.12	20.38	-0.03
347	SLU 9	499	-18	4388	1.12	20.37	-0.03
347	SLU 10	533	-19	4864	1.34	21.72	-0.04
347	SLU 11	553	-20	4972	1.35	22.58	-0.04
347	SLU 12	553	-20	4974	1.35	22.56	-0.04
347	SLU 13	547	-20	4935	1.34	22.32	-0.04
347	SLU 14	568	-20	5044	1.35	23.18	-0.04
347	SLU 15	568	-20	5046	1.35	23.17	-0.04
347	SLU 16	562	-20	5003	1.34	22.95	-0.04
347	SLU 17	562	-20	5005	1.34	22.94	-0.04
347	SLU 18	560	-20	5125	1.43	22.84	-0.04
347	SLU 19	560	-21	5127	1.43	22.83	-0.04
347	SLU 20	574	-21	5197	1.43	23.44	-0.04
347	SLU 21	574	-21	5199	1.43	23.43	-0.04
347	SLU 22	535	-19	4810	1.32	21.8	-0.04
347	SLU 23	534	-19	4814	1.32	21.78	-0.04
347	SLU 24	555	-20	4922	1.33	22.63	-0.04
347	SLU 25	555	-20	4924	1.34	22.62	-0.04
347	SLU 26	549	-20	4885	1.32	22.38	-0.04
347	SLU 27	569	-20	4993	1.33	23.24	-0.04
347	SLU 28	569	-20	4995	1.33	23.22	-0.04
347	SLU 29	564	-20	4953	1.32	23.01	-0.04
347	SLU 30	563	-20	4955	1.32	22.99	-0.04
347	SLU 31	597	-22	5431	1.54	24.34	-0.04
347	SLU 32	617	-22	5540	1.55	25.2	-0.04
347	SLU 33	617	-22	5541	1.55	25.19	-0.04
347	SLU 34	611	-22	5502	1.54	24.95	-0.04
347	SLU 35	632	-23	5611	1.55	25.8	-0.04
347	SLU 36	632	-23	5613	1.55	25.79	-0.04
347	SLU 37	626	-22	5571	1.53	25.57	-0.04
347	SLU 38	626	-22	5572	1.53	25.56	-0.04
347	SLU 39	624	-23	5692	1.63	25.46	-0.04
347	SLU 40	624	-23	5694	1.63	25.45	-0.04
347	SLU 41	638	-23	5764	1.63	26.07	-0.04
347	SLU 42	638	-23	5766	1.63	26.05	-0.04
347	SLU 43	590	-21	5322	1.39	24.03	-0.04
347	SLU 44	590	-21	5325	1.4	24.01	-0.04
347	SLU 45	610	-22	5433	1.41	24.86	-0.04
347	SLU 46	610	-22	5435	1.41	24.85	-0.04
347	SLU 47	604	-22	5396	1.39	24.61	-0.04
347	SLU 48	625	-22	5505	1.4	25.47	-0.04
347	SLU 49	624	-22	5507	1.4	25.45	-0.04
347	SLU 50	619	-22	5465	1.39	25.23	-0.04
347	SLU 51	619	-22	5466	1.39	25.22	-0.04

Nodo	Cont.	Reazione a traslazione			Reazione a rotazione		
Ind.	N.br.	x	y	z	x	y	z
347	SLU 52	652	-24	5942	1.61	26.57	-0.04
347	SLU 53	673	-24	6051	1.62	27.43	-0.04
347	SLU 54	672	-24	6053	1.62	27.42	-0.04
347	SLU 55	667	-24	6014	1.61	27.18	-0.04
347	SLU 56	687	-25	6122	1.62	28.03	-0.04
347	SLU 57	687	-25	6124	1.62	28.02	-0.04
347	SLU 58	681	-24	6082	1.6	27.8	-0.04
347	SLU 59	681	-24	6084	1.61	27.79	-0.04
347	SLU 60	679	-25	6204	1.7	27.69	-0.05
347	SLU 61	679	-25	6206	1.7	27.68	-0.05
347	SLU 62	694	-25	6275	1.7	28.3	-0.05
347	SLU 63	693	-25	6277	1.7	28.28	-0.05
347	SLU 64	654	-24	5889	1.59	26.65	-0.04
347	SLU 65	654	-24	5892	1.59	26.63	-0.04
347	SLU 66	674	-24	6001	1.6	27.49	-0.04
347	SLU 67	674	-24	6002	1.6	27.47	-0.04
347	SLU 68	668	-24	5963	1.59	27.23	-0.04
347	SLU 69	689	-24	6072	1.6	28.09	-0.04
347	SLU 70	688	-24	6074	1.6	28.08	-0.04
347	SLU 71	683	-24	6032	1.59	27.86	-0.04
347	SLU 72	683	-24	6034	1.59	27.85	-0.04
347	SLU 73	716	-26	6509	1.81	29.2	-0.05
347	SLU 74	737	-27	6618	1.82	30.05	-0.05
347	SLU 75	736	-27	6620	1.82	30.04	-0.05
347	SLU 76	731	-26	6581	1.81	29.8	-0.05
347	SLU 77	751	-27	6689	1.82	30.66	-0.05
347	SLU 78	751	-27	6691	1.82	30.64	-0.05
347	SLU 79	745	-27	6649	1.8	30.42	-0.05
347	SLU 80	745	-27	6651	1.8	30.41	-0.05
347	SLU 81	743	-27	6771	1.9	30.32	-0.05
347	SLU 82	743	-27	6773	1.9	30.3	-0.05
347	SLU 83	758	-27	6842	1.9	30.92	-0.05
347	SLU 84	757	-27	6844	1.9	30.91	-0.05
347	SLE RA 1	489	-18	4405	1.18	19.92	-0.03
347	SLE RA 2	489	-18	4407	1.18	19.91	-0.03
347	SLE RA 3	502	-18	4480	1.19	20.48	-0.03
347	SLE RA 4	502	-18	4481	1.19	20.47	-0.03
347	SLE RA 5	498	-18	4455	1.18	20.31	-0.03
347	SLE RA 6	512	-18	4527	1.19	20.88	-0.03
347	SLE RA 7	512	-18	4529	1.19	20.87	-0.03
347	SLE RA 8	508	-18	4500	1.18	20.73	-0.03
347	SLE RA 9	508	-18	4502	1.18	20.72	-0.03
347	SLE RA 10	530	-19	4819	1.32	21.62	-0.04
347	SLE RA 11	544	-20	4891	1.33	22.19	-0.04
347	SLE RA 12	544	-20	4893	1.33	22.18	-0.04
347	SLE RA 13	540	-20	4867	1.32	22.02	-0.04
347	SLE RA 14	554	-20	4939	1.33	22.59	-0.04
347	SLE RA 15	554	-20	4940	1.33	22.59	-0.04
347	SLE RA 16	550	-20	4912	1.32	22.44	-0.04
347	SLE RA 17	550	-20	4913	1.32	22.43	-0.04
347	SLE RA 18	549	-20	4993	1.39	22.37	-0.04
347	SLE RA 19	548	-20	4995	1.39	22.36	-0.04
347	SLE RA 20	558	-20	5041	1.38	22.77	-0.04
347	SLE RA 21	558	-20	5042	1.38	22.76	-0.04
347	SLE FR 1	489	-18	4405	1.18	19.92	-0.03
347	SLE FR 2	489	-18	4406	1.18	19.92	-0.03
347	SLE FR 3	493	-18	4424	1.18	20.08	-0.03
347	SLE FR 4	507	-18	4582	1.24	20.65	-0.03
347	SLE FR 5	511	-18	4601	1.24	20.82	-0.03
347	SLE FR 6	519	-19	4699	1.28	21.15	-0.03
347	SLE QP 1	489	-18	4405	1.18	19.92	-0.03
347	SLE QP 2	507	-18	4582	1.24	20.66	-0.03
347	SLD 1	1487	-19	4556	1.58	64.16	-0.02
347	SLD 2	1487	-19	4556	1.58	64.16	-0.02
347	SLD 3	1611	-24	5227	3.35	68.96	-0.04
347	SLD 4	1611	-24	5227	3.35	68.96	-0.04
347	SLD 5	614	-12	3556	-1.35	26.42	-0.01
347	SLD 6	614	-12	3556	-1.35	26.42	-0.01
347	SLD 7	1025	-27	5793	4.57	42.44	-0.05
347	SLD 8	1025	-27	5793	4.57	42.44	-0.05
347	SLD 9	-11	-10	3370	-2.09	-1.13	-0.01
347	SLD 10	-11	-10	3370	-2.09	-1.13	-0.01
347	SLD 11	400	-25	5607	3.84	14.9	-0.05
347	SLD 12	400	-25	5607	3.84	14.9	-0.05
347	SLD 13	-597	-13	3936	-0.87	-27.65	-0.03
347	SLD 14	-597	-13	3936	-0.87	-27.65	-0.03
347	SLD 15	-474	-18	4608	0.91	-22.84	-0.04
347	SLD 16	-474	-18	4608	0.91	-22.84	-0.04
347	SLV 1	2729	-20	4491	1.99	119.29	-0.01
347	SLV 2	2729	-20	4491	1.99	119.29	-0.01
347	SLV 3	3023	-31	6091	6.19	130.75	-0.04
347	SLV 4	3023	-31	6091	6.19	130.75	-0.04
347	SLV 5	728	-2	2127	-4.91	32.85	0.02
347	SLV 6	728	-2	2127	-4.91	32.85	0.02
347	SLV 7	1708	-39	7462	9.11	71.08	-0.08
347	SLV 8	1708	-39	7462	9.11	71.08	-0.08
347	SLV 9	-694	2	1702	-6.62	-29.76	0.01
347	SLV 10	-694	2	1702	-6.62	-29.76	0.01
347	SLV 11	286	-35	7036	7.4	8.46	-0.08
347	SLV 12	286	-35	7036	7.4	8.46	-0.08
347	SLV 13	-2009	-6	3072	-3.71	-89.44	-0.03

Nodo	Cont.	Reazione a traslazione			Reazione a rotazione		
Ind.	N.br.	x	y	z	x	y	z
347	SLV 14	-2009	-6	3072	-3.71	-89.44	-0.03
347	SLV 15	-1715	-17	4672	0.5	-77.97	-0.06
347	SLV 16	-1715	-17	4672	0.5	-77.97	-0.06
348	SLU 1	257	-503	6451	8.79	11.75	0
348	SLU 2	257	-503	6456	8.81	11.72	0
348	SLU 3	270	-515	6622	8.92	12.33	0
348	SLU 4	270	-515	6625	8.93	12.31	0
348	SLU 5	267	-510	6564	8.84	12.16	0
348	SLU 6	280	-522	6729	8.95	12.77	0
348	SLU 7	280	-522	6733	8.96	12.75	0
348	SLU 8	277	-516	6666	8.86	12.63	0
348	SLU 9	277	-516	6669	8.87	12.61	0
348	SLU 10	288	-572	7380	9.92	13.22	0
348	SLU 11	302	-584	7546	10.03	13.83	0
348	SLU 12	302	-584	7549	10.04	13.81	0
348	SLU 13	298	-579	7488	9.95	13.66	0
348	SLU 14	312	-591	7653	10.06	14.27	0
348	SLU 15	312	-591	7657	10.07	14.25	0
348	SLU 16	309	-585	7590	9.97	14.13	0
348	SLU 17	309	-585	7593	9.98	14.11	0
348	SLU 18	302	-601	7771	10.38	13.89	0
348	SLU 19	302	-602	7774	10.39	13.87	0
348	SLU 20	313	-608	7879	10.41	14.33	0
348	SLU 21	312	-608	7882	10.42	14.31	0
348	SLU 22	291	-570	7309	9.88	13.32	0
348	SLU 23	290	-570	7314	9.89	13.29	0
348	SLU 24	304	-582	7480	10.01	13.9	0
348	SLU 25	304	-582	7483	10.01	13.88	0
348	SLU 26	300	-577	7421	9.92	13.73	0
348	SLU 27	314	-589	7587	10.04	14.34	0
348	SLU 28	314	-589	7590	10.05	14.32	0
348	SLU 29	311	-583	7524	9.94	14.2	0
348	SLU 30	311	-583	7527	9.95	14.19	0
348	SLU 31	322	-639	8238	11	14.79	0
348	SLU 32	336	-651	8404	11.12	15.4	0
348	SLU 33	335	-651	8407	11.12	15.38	0
348	SLU 34	332	-646	8345	11.03	15.23	0
348	SLU 35	346	-658	8511	11.15	15.84	0
348	SLU 36	345	-658	8514	11.16	15.82	0
348	SLU 37	343	-652	8448	11.05	15.7	0
348	SLU 38	342	-652	8451	11.06	15.69	0
348	SLU 39	336	-668	8629	11.46	15.46	0
348	SLU 40	336	-669	8632	11.47	15.45	0
348	SLU 41	346	-675	8736	11.5	15.9	0
348	SLU 42	346	-675	8739	11.5	15.89	0
348	SLU 43	323	-631	8093	11.06	14.73	0
348	SLU 44	322	-631	8098	11.07	14.71	0
348	SLU 45	336	-643	8263	11.19	15.31	0
348	SLU 46	335	-643	8266	11.2	15.3	0
348	SLU 47	332	-638	8205	11.11	15.15	0
348	SLU 48	346	-649	8371	11.22	15.75	0.01
348	SLU 49	346	-650	8374	11.23	15.74	0
348	SLU 50	343	-644	8308	11.12	15.62	0
348	SLU 51	343	-644	8311	11.13	15.6	0
348	SLU 52	354	-700	9022	12.18	16.21	0
348	SLU 53	368	-712	9187	12.3	16.81	0
348	SLU 54	367	-712	9190	12.31	16.8	0
348	SLU 55	364	-707	9129	12.22	16.65	0
348	SLU 56	378	-718	9295	12.33	17.25	0.01
348	SLU 57	377	-719	9298	12.34	17.24	0.01
348	SLU 58	375	-713	9232	12.23	17.11	0.01
348	SLU 59	374	-713	9235	12.24	17.1	0.01
348	SLU 60	368	-729	9413	12.64	16.87	0
348	SLU 61	368	-730	9416	12.65	16.86	0
348	SLU 62	378	-736	9520	12.68	17.32	0.01
348	SLU 63	378	-736	9523	12.69	17.3	0
348	SLU 64	356	-698	8950	12.14	16.3	0
348	SLU 65	356	-698	8955	12.16	16.28	0
348	SLU 66	370	-710	9121	12.27	16.88	0.01
348	SLU 67	369	-710	9124	12.28	16.87	0.01
348	SLU 68	366	-705	9063	12.19	16.72	0
348	SLU 69	380	-716	9228	12.31	17.33	0.01
348	SLU 70	379	-717	9231	12.31	17.31	0.01
348	SLU 71	377	-711	9165	12.21	17.19	0.01
348	SLU 72	376	-711	9168	12.22	17.17	0.01
348	SLU 73	388	-767	9879	13.27	17.78	0
348	SLU 74	401	-779	10045	13.38	18.38	0.01
348	SLU 75	401	-779	10048	13.39	18.37	0.01
348	SLU 76	398	-774	9987	13.3	18.22	0.01
348	SLU 77	411	-785	10152	13.42	18.83	0.01
348	SLU 78	411	-786	10155	13.42	18.81	0.01
348	SLU 79	408	-780	10089	13.32	18.69	0.01
348	SLU 80	408	-780	10092	13.33	18.67	0.01
348	SLU 81	402	-796	10270	13.73	18.45	0.01
348	SLU 82	401	-797	10273	13.74	18.43	0.01
348	SLU 83	412	-803	10378	13.76	18.89	0.01
348	SLU 84	411	-803	10381	13.77	18.87	0.01
348	SLE RA 1	267	-522	6696	9.1	12.2	0
348	SLE RA 2	266	-522	6700	9.11	12.18	0
348	SLE RA 3	276	-530	6810	9.19	12.58	0
348	SLE RA 4	275	-530	6812	9.19	12.57	0

Nodo	Cont.	Reazione a traslazione			Reazione a rotazione		
Ind.	N.br.	x	y	z	x	y	z
348	SLE RA 5	273	-527	6771	9.13	12.47	0
348	SLE RA 6	282	-534	6882	9.21	12.88	0
348	SLE RA 7	282	-535	6884	9.22	12.87	0
348	SLE RA 8	280	-531	6840	9.15	12.79	0
348	SLE RA 9	280	-531	6842	9.15	12.77	0
348	SLE RA 10	288	-568	7316	9.85	13.18	0
348	SLE RA 11	297	-576	7426	9.93	13.58	0
348	SLE RA 12	296	-576	7428	9.93	13.57	0
348	SLE RA 13	294	-573	7387	9.87	13.47	0
348	SLE RA 14	303	-580	7498	9.95	13.88	0
348	SLE RA 15	303	-581	7500	9.96	13.87	0
348	SLE RA 16	301	-577	7456	9.89	13.78	0
348	SLE RA 17	301	-577	7458	9.89	13.77	0
348	SLE RA 18	297	-588	7576	10.16	13.62	0
348	SLE RA 19	297	-588	7578	10.17	13.61	0
348	SLE RA 20	304	-592	7648	10.18	13.92	0
348	SLE RA 21	303	-592	7650	10.19	13.91	0
348	SLE FR 1	267	-522	6696	9.1	12.2	0
348	SLE FR 2	267	-522	6697	9.1	12.19	0
348	SLE FR 3	269	-524	6725	9.11	12.31	0
348	SLE FR 4	276	-542	6961	9.42	12.62	0
348	SLE FR 5	279	-543	6989	9.43	12.74	0
348	SLE FR 6	282	-555	7136	9.63	12.91	0
348	SLE QP 1	267	-522	6696	9.1	12.2	0
348	SLE QP 2	276	-542	6960	9.42	12.62	0
348	SLD 1	1336	-508	6809	7.92	58.09	0.08
348	SLD 2	1336	-508	6809	7.92	58.09	0.08
348	SLD 3	1396	-733	7942	17.18	60.9	0.07
348	SLD 4	1396	-733	7942	17.18	60.9	0.07
348	SLD 5	502	-190	5197	-5.08	22.01	0.03
348	SLD 6	502	-190	5197	-5.08	22.01	0.03
348	SLD 7	703	-941	8973	25.8	31.36	0.02
348	SLD 8	703	-941	8973	25.8	31.36	0.02
348	SLD 9	-152	-143	4948	-6.96	-6.11	-0.01
348	SLD 10	-152	-143	4948	-6.96	-6.11	-0.01
348	SLD 11	49	-894	8724	23.92	3.24	-0.03
348	SLD 12	49	-894	8724	23.92	3.24	-0.03
348	SLD 13	-844	-350	5979	1.66	-35.65	-0.06
348	SLD 14	-844	-350	5979	1.66	-35.65	-0.06
348	SLD 15	-784	-576	7111	10.92	-32.84	-0.07
348	SLD 16	-784	-576	7111	10.92	-32.84	-0.07
348	SLV 1	2683	-457	6572	5.73	115.9	0.17
348	SLV 2	2683	-457	6572	5.73	115.9	0.17
348	SLV 3	2827	-992	9274	27.67	122.57	0.16
348	SLV 4	2827	-992	9274	27.67	122.57	0.16
348	SLV 5	780	295	2746	-24.97	33.48	0.07
348	SLV 6	780	295	2746	-24.97	33.48	0.07
348	SLV 7	1259	-1488	11752	48.18	55.73	0.03
348	SLV 8	1259	-1488	11752	48.18	55.73	0.03
348	SLV 9	-707	405	2168	-29.34	-30.48	-0.03
348	SLV 10	-707	405	2168	-29.34	-30.48	-0.03
348	SLV 11	-229	-1379	11175	43.81	-8.23	-0.06
348	SLV 12	-229	-1379	11175	43.81	-8.23	-0.06
348	SLV 13	-2275	-91	4646	-8.83	-97.32	-0.15
348	SLV 14	-2275	-91	4646	-8.83	-97.32	-0.15
348	SLV 15	-2132	-626	7348	13.11	-90.65	-0.16
348	SLV 16	-2132	-626	7348	13.11	-90.65	-0.16
349	SLU 1	34	-11	4781	-1.87	3.29	0.04
349	SLU 2	33	-11	4785	-1.87	3.25	0.04
349	SLU 3	40	-11	4907	-1.95	3.58	0.04
349	SLU 4	39	-11	4909	-1.95	3.56	0.04
349	SLU 5	39	-11	4866	-1.92	3.52	0.04
349	SLU 6	45	-11	4988	-2	3.85	0.04
349	SLU 7	45	-11	4990	-1.99	3.83	0.04
349	SLU 8	45	-11	4943	-1.97	3.82	0.04
349	SLU 9	45	-11	4945	-1.97	3.8	0.04
349	SLU 10	34	-12	5469	-2.21	3.56	0.05
349	SLU 11	41	-12	5591	-2.29	3.89	0.05
349	SLU 12	40	-12	5594	-2.29	3.87	0.05
349	SLU 13	40	-12	5550	-2.26	3.82	0.05
349	SLU 14	46	-12	5672	-2.34	4.15	0.05
349	SLU 15	46	-12	5675	-2.34	4.13	0.05
349	SLU 16	46	-12	5627	-2.31	4.12	0.05
349	SLU 17	45	-12	5629	-2.31	4.1	0.05
349	SLU 18	35	-12	5758	-2.36	3.72	0.05
349	SLU 19	35	-12	5761	-2.36	3.7	0.05
349	SLU 20	41	-13	5839	-2.41	3.99	0.05
349	SLU 21	40	-13	5842	-2.41	3.96	0.05
349	SLU 22	37	-12	5412	-2.2	3.68	0.05
349	SLU 23	36	-12	5416	-2.2	3.64	0.05
349	SLU 24	43	-12	5538	-2.28	3.97	0.05
349	SLU 25	42	-12	5540	-2.28	3.95	0.05
349	SLU 26	42	-12	5496	-2.25	3.9	0.05
349	SLU 27	48	-12	5619	-2.33	4.23	0.05
349	SLU 28	48	-12	5621	-2.33	4.21	0.05
349	SLU 29	48	-12	5573	-2.3	4.2	0.05
349	SLU 30	47	-12	5576	-2.3	4.18	0.05
349	SLU 31	37	-13	6100	-2.55	3.94	0.05
349	SLU 32	43	-13	6222	-2.62	4.27	0.05
349	SLU 33	43	-13	6224	-2.62	4.25	0.05
349	SLU 34	42	-13	6181	-2.6	4.21	0.05

Nodo	Cont.	Reazione a traslazione			Reazione a rotazione		
Ind.	N.br.	x	y	z	x	y	z
349	SLU 35	49	-14	6303	-2.67	4.54	0.05
349	SLU 36	48	-14	6305	-2.67	4.52	0.05
349	SLU 37	49	-14	6258	-2.65	4.51	0.05
349	SLU 38	48	-14	6260	-2.65	4.48	0.05
349	SLU 39	38	-14	6389	-2.7	4.11	0.05
349	SLU 40	37	-14	6391	-2.7	4.09	0.05
349	SLU 41	44	-14	6470	-2.74	4.37	0.06
349	SLU 42	43	-14	6472	-2.74	4.35	0.06
349	SLU 43	44	-13	5999	-2.32	4.14	0.05
349	SLU 44	43	-13	6003	-2.32	4.11	0.05
349	SLU 45	49	-14	6125	-2.39	4.44	0.05
349	SLU 46	49	-14	6127	-2.39	4.42	0.05
349	SLU 47	48	-13	6084	-2.37	4.37	0.05
349	SLU 48	55	-14	6206	-2.44	4.7	0.05
349	SLU 49	54	-14	6208	-2.44	4.68	0.05
349	SLU 50	55	-14	6161	-2.41	4.67	0.05
349	SLU 51	54	-14	6163	-2.41	4.65	0.05
349	SLU 52	43	-15	6687	-2.66	4.41	0.06
349	SLU 53	50	-15	6809	-2.74	4.74	0.06
349	SLU 54	49	-15	6812	-2.74	4.72	0.06
349	SLU 55	49	-15	6768	-2.71	4.67	0.06
349	SLU 56	55	-15	6890	-2.79	5.01	0.06
349	SLU 57	55	-15	6893	-2.79	4.98	0.06
349	SLU 58	55	-15	6845	-2.76	4.98	0.06
349	SLU 59	55	-15	6847	-2.76	4.95	0.06
349	SLU 60	45	-15	6976	-2.81	4.58	0.06
349	SLU 61	44	-15	6979	-2.81	4.55	0.06
349	SLU 62	50	-15	7057	-2.86	4.84	0.06
349	SLU 63	50	-15	7060	-2.86	4.82	0.06
349	SLU 64	46	-15	6630	-2.65	4.53	0.06
349	SLU 65	45	-15	6634	-2.65	4.49	0.06
349	SLU 66	52	-15	6756	-2.73	4.82	0.06
349	SLU 67	51	-15	6758	-2.73	4.8	0.06
349	SLU 68	51	-15	6714	-2.7	4.76	0.06
349	SLU 69	57	-15	6837	-2.78	5.09	0.06
349	SLU 70	57	-15	6839	-2.78	5.07	0.06
349	SLU 71	57	-15	6791	-2.75	5.06	0.06
349	SLU 72	57	-15	6794	-2.75	5.04	0.06
349	SLU 73	46	-16	7318	-2.99	4.8	0.06
349	SLU 74	53	-16	7440	-3.07	5.13	0.06
349	SLU 75	52	-16	7442	-3.07	5.11	0.06
349	SLU 76	52	-16	7399	-3.04	5.06	0.06
349	SLU 77	58	-16	7521	-3.12	5.39	0.06
349	SLU 78	58	-16	7523	-3.12	5.37	0.06
349	SLU 79	58	-16	7476	-3.09	5.36	0.06
349	SLU 80	57	-16	7478	-3.09	5.34	0.06
349	SLU 81	47	-16	7607	-3.14	4.96	0.06
349	SLU 82	47	-16	7609	-3.14	4.94	0.06
349	SLU 83	53	-17	7688	-3.19	5.23	0.07
349	SLU 84	52	-17	7690	-3.19	5.21	0.07
349	SLE RA 1	35	-11	4961	-1.97	3.4	0.04
349	SLE RA 2	34	-11	4964	-1.97	3.37	0.04
349	SLE RA 3	39	-11	5045	-2.02	3.6	0.04
349	SLE RA 4	38	-11	5047	-2.02	3.58	0.04
349	SLE RA 5	38	-11	5018	-2	3.55	0.04
349	SLE RA 6	42	-11	5099	-2.05	3.77	0.04
349	SLE RA 7	42	-11	5101	-2.05	3.76	0.04
349	SLE RA 8	42	-11	5069	-2.03	3.75	0.04
349	SLE RA 9	42	-11	5070	-2.03	3.74	0.04
349	SLE RA 10	35	-12	5420	-2.2	3.58	0.05
349	SLE RA 11	39	-12	5501	-2.25	3.8	0.05
349	SLE RA 12	39	-12	5503	-2.25	3.78	0.05
349	SLE RA 13	39	-12	5474	-2.23	3.75	0.05
349	SLE RA 14	43	-12	5555	-2.28	3.97	0.05
349	SLE RA 15	43	-12	5557	-2.28	3.96	0.05
349	SLE RA 16	43	-12	5525	-2.26	3.95	0.05
349	SLE RA 17	42	-12	5527	-2.26	3.94	0.05
349	SLE RA 18	36	-12	5613	-2.29	3.69	0.05
349	SLE RA 19	35	-12	5614	-2.29	3.67	0.05
349	SLE RA 20	39	-12	5667	-2.33	3.86	0.05
349	SLE RA 21	39	-12	5668	-2.33	3.85	0.05
349	SLE FR 1	35	-11	4961	-1.97	3.4	0.04
349	SLE FR 2	35	-11	4962	-1.97	3.39	0.04
349	SLE FR 3	37	-11	4983	-1.98	3.47	0.04
349	SLE FR 4	35	-11	5157	-2.06	3.48	0.04
349	SLE FR 5	37	-11	5178	-2.08	3.56	0.04
349	SLE FR 6	35	-12	5287	-2.13	3.54	0.04
349	SLE QP 1	35	-11	4961	-1.97	3.4	0.04
349	SLE QP 2	35	-11	5157	-2.06	3.49	0.04
349	SLD 1	1212	-12	4991	-0.61	53.65	0.04
349	SLD 2	1212	-12	4991	-0.61	53.65	0.04
349	SLD 3	1159	-19	5721	0.65	51.73	0.06
349	SLD 4	1159	-19	5721	0.65	51.73	0.06
349	SLD 5	468	-1	4000	-3.55	21.44	0.01
349	SLD 6	468	-1	4000	-3.55	21.44	0.01
349	SLD 7	293	-24	6433	0.67	15.05	0.08
349	SLD 8	293	-24	6433	0.67	15.05	0.08
349	SLD 9	-222	2	3880	-4.8	-8.08	0.01
349	SLD 10	-222	2	3880	-4.8	-8.08	0.01
349	SLD 11	-398	-22	6313	-0.58	-14.47	0.08
349	SLD 12	-398	-22	6313	-0.58	-14.47	0.08

Nodo	Cont.	Reazione a traslazione			Reazione a rotazione		
Ind.	N.br.	x	y	z	x	y	z
349	SLD 13	-1089	-3	4592	-4.78	-44.76	0.03
349	SLD 14	-1089	-3	4592	-4.78	-44.76	0.03
349	SLD 15	-1141	-11	5322	-3.51	-46.68	0.05
349	SLD 16	-1141	-11	5322	-3.51	-46.68	0.05
349	SLV 1	2717	-13	4761	1.22	117.77	0.04
349	SLV 2	2717	-13	4761	1.22	117.77	0.04
349	SLV 3	2590	-30	6500	4.26	113.14	0.09
349	SLV 4	2590	-30	6500	4.26	113.14	0.09
349	SLV 5	1033	14	2400	-5.7	44.79	-0.03
349	SLV 6	1033	14	2400	-5.7	44.79	-0.03
349	SLV 7	608	-42	8198	4.45	29.36	0.13
349	SLV 8	608	-42	8198	4.45	29.36	0.13
349	SLV 9	-538	20	2116	-8.58	-22.39	-0.04
349	SLV 10	-538	20	2116	-8.58	-22.39	-0.04
349	SLV 11	-963	-36	7913	1.57	-37.82	0.12
349	SLV 12	-963	-36	7913	1.57	-37.82	0.12
349	SLV 13	-2519	7	3813	-8.39	-106.17	0
349	SLV 14	-2519	7	3813	-8.39	-106.17	0
349	SLV 15	-2647	-10	5552	-5.35	-110.8	0.05
349	SLV 16	-2647	-10	5552	-5.35	-110.8	0.05
350	SLU 1	-96	11	4470	-9.78	-2.62	0.02
350	SLU 2	-97	11	4474	-9.78	-2.66	0.02
350	SLU 3	-95	11	4587	-10.12	-2.56	0.02
350	SLU 4	-96	11	4589	-10.12	-2.58	0.02
350	SLU 5	-95	11	4549	-10	-2.56	0.02
350	SLU 6	-93	11	4662	-10.34	-2.45	0.03
350	SLU 7	-94	11	4664	-10.34	-2.48	0.03
350	SLU 8	-92	11	4621	-10.21	-2.41	0.03
350	SLU 9	-92	11	4623	-10.21	-2.44	0.03
350	SLU 10	-115	12	5111	-11.29	-3.2	0.03
350	SLU 11	-113	13	5224	-11.62	-3.1	0.03
350	SLU 12	-114	13	5226	-11.63	-3.12	0.03
350	SLU 13	-113	13	5186	-11.5	-3.1	0.03
350	SLU 14	-111	13	5299	-11.84	-2.99	0.03
350	SLU 15	-112	13	5301	-11.84	-3.02	0.03
350	SLU 16	-110	13	5258	-11.71	-2.95	0.03
350	SLU 17	-110	13	5260	-11.72	-2.98	0.03
350	SLU 18	-121	13	5381	-11.92	-3.39	0.03
350	SLU 19	-122	13	5383	-11.93	-3.42	0.03
350	SLU 20	-119	13	5456	-12.14	-3.29	0.03
350	SLU 21	-120	13	5458	-12.14	-3.31	0.03
350	SLU 22	-111	12	5055	-11.25	-3.07	0.03
350	SLU 23	-112	12	5059	-11.25	-3.1	0.03
350	SLU 24	-111	13	5172	-11.59	-3	0.03
350	SLU 25	-111	13	5174	-11.6	-3.03	0.03
350	SLU 26	-110	12	5134	-11.47	-3	0.03
350	SLU 27	-109	13	5247	-11.81	-2.9	0.03
350	SLU 28	-109	13	5249	-11.81	-2.92	0.03
350	SLU 29	-107	13	5205	-11.68	-2.86	0.03
350	SLU 30	-108	13	5208	-11.69	-2.88	0.03
350	SLU 31	-130	14	5696	-12.76	-3.65	0.03
350	SLU 32	-129	14	5809	-13.09	-3.54	0.03
350	SLU 33	-129	14	5811	-13.1	-3.57	0.03
350	SLU 34	-128	14	5771	-12.97	-3.54	0.03
350	SLU 35	-127	15	5884	-13.31	-3.44	0.03
350	SLU 36	-127	15	5886	-13.32	-3.46	0.03
350	SLU 37	-125	14	5843	-13.18	-3.4	0.03
350	SLU 38	-126	14	5845	-13.19	-3.42	0.03
350	SLU 39	-137	15	5966	-13.39	-3.84	0.03
350	SLU 40	-137	15	5968	-13.4	-3.86	0.03
350	SLU 41	-135	15	6041	-13.61	-3.73	0.03
350	SLU 42	-135	15	6043	-13.61	-3.76	0.03
350	SLU 43	-119	13	5611	-12.2	-3.26	0.03
350	SLU 44	-120	13	5615	-12.21	-3.3	0.03
350	SLU 45	-119	14	5727	-12.55	-3.19	0.03
350	SLU 46	-119	14	5730	-12.55	-3.22	0.03
350	SLU 47	-118	13	5690	-12.43	-3.19	0.03
350	SLU 48	-117	14	5802	-12.77	-3.09	0.03
350	SLU 49	-117	14	5805	-12.77	-3.11	0.03
350	SLU 50	-115	14	5761	-12.64	-3.05	0.03
350	SLU 51	-116	14	5763	-12.64	-3.07	0.03
350	SLU 52	-138	15	6252	-13.71	-3.84	0.03
350	SLU 53	-137	15	6365	-14.05	-3.73	0.03
350	SLU 54	-137	15	6367	-14.06	-3.76	0.03
350	SLU 55	-136	15	6327	-13.93	-3.73	0.03
350	SLU 56	-135	15	6440	-14.27	-3.63	0.03
350	SLU 57	-135	15	6442	-14.27	-3.65	0.03
350	SLU 58	-133	15	6398	-14.14	-3.59	0.03
350	SLU 59	-134	15	6401	-14.15	-3.61	0.03
350	SLU 60	-145	16	6521	-14.35	-4.03	0.03
350	SLU 61	-145	16	6524	-14.35	-4.05	0.03
350	SLU 62	-143	16	6596	-14.57	-3.93	0.04
350	SLU 63	-143	16	6599	-14.57	-3.95	0.04
350	SLU 64	-134	15	6196	-13.67	-3.7	0.03
350	SLU 65	-135	15	6200	-13.68	-3.74	0.03
350	SLU 66	-134	15	6312	-14.02	-3.64	0.03
350	SLU 67	-135	15	6315	-14.02	-3.66	0.03
350	SLU 68	-134	15	6275	-13.9	-3.64	0.03
350	SLU 69	-132	15	6387	-14.24	-3.53	0.03
350	SLU 70	-133	15	6390	-14.24	-3.56	0.03
350	SLU 71	-131	15	6346	-14.11	-3.49	0.03

Nodo	Cont.	Reazione a traslazione			Reazione a rotazione		
Ind.	N.br.	x	y	z	x	y	z
350	SLU 72	-131	15	6348	-14.11	-3.51	0.03
350	SLU 73	-153	17	6837	-15.18	-4.28	0.04
350	SLU 74	-152	17	6949	-15.52	-4.18	0.04
350	SLU 75	-153	17	6952	-15.53	-4.2	0.04
350	SLU 76	-152	17	6912	-15.4	-4.18	0.04
350	SLU 77	-150	17	7024	-15.74	-4.07	0.04
350	SLU 78	-151	17	7027	-15.74	-4.1	0.04
350	SLU 79	-149	17	6983	-15.61	-4.03	0.04
350	SLU 80	-149	17	6985	-15.62	-4.05	0.04
350	SLU 81	-160	17	7106	-15.82	-4.47	0.04
350	SLU 82	-161	17	7108	-15.83	-4.5	0.04
350	SLU 83	-158	17	7181	-16.04	-4.37	0.04
350	SLU 84	-159	17	7183	-16.04	-4.39	0.04
350	SLE RA 1	-100	11	4638	-10.2	-2.75	0.02
350	SLE RA 2	-101	11	4640	-10.2	-2.78	0.02
350	SLE RA 3	-100	11	4715	-10.43	-2.71	0.03
350	SLE RA 4	-100	11	4717	-10.43	-2.72	0.03
350	SLE RA 5	-99	11	4690	-10.35	-2.71	0.03
350	SLE RA 6	-98	11	4765	-10.57	-2.64	0.03
350	SLE RA 7	-99	11	4767	-10.57	-2.65	0.03
350	SLE RA 8	-98	11	4738	-10.49	-2.61	0.03
350	SLE RA 9	-98	11	4739	-10.49	-2.63	0.03
350	SLE RA 10	-113	12	5065	-11.2	-3.14	0.03
350	SLE RA 11	-112	12	5140	-11.43	-3.07	0.03
350	SLE RA 12	-112	12	5141	-11.43	-3.08	0.03
350	SLE RA 13	-111	12	5115	-11.35	-3.07	0.03
350	SLE RA 14	-110	13	5190	-11.57	-3	0.03
350	SLE RA 15	-111	13	5191	-11.57	-3.01	0.03
350	SLE RA 16	-110	12	5162	-11.49	-2.97	0.03
350	SLE RA 17	-110	12	5164	-11.49	-2.99	0.03
350	SLE RA 18	-117	13	5244	-11.63	-3.26	0.03
350	SLE RA 19	-118	13	5246	-11.63	-3.28	0.03
350	SLE RA 20	-116	13	5294	-11.77	-3.19	0.03
350	SLE RA 21	-116	13	5296	-11.77	-3.21	0.03
350	SLE FR 1	-100	11	4638	-10.2	-2.75	0.02
350	SLE FR 2	-100	11	4638	-10.2	-2.75	0.02
350	SLE FR 3	-100	11	4658	-10.25	-2.72	0.02
350	SLE FR 4	-105	12	4820	-10.63	-2.91	0.03
350	SLE FR 5	-105	12	4840	-10.68	-2.88	0.03
350	SLE FR 6	-109	12	4941	-10.91	-3.01	0.03
350	SLE QP 1	-100	11	4638	-10.2	-2.75	0.02
350	SLE QP 2	-105	12	4820	-10.62	-2.9	0.03
350	SLD 1	1083	2	4346	-5.9	47.53	0.02
350	SLD 2	1083	2	4346	-5.9	47.53	0.02
350	SLD 3	1029	10	4961	-9.01	45.45	0.04
350	SLD 4	1029	10	4961	-9.01	45.45	0.04
350	SLD 5	334	-2	3744	-4.48	15.38	0
350	SLD 6	334	-2	3744	-4.48	15.38	0
350	SLD 7	152	22	5795	-14.86	8.45	0.06
350	SLD 8	152	22	5795	-14.86	8.45	0.06
350	SLD 9	-363	1	3844	-6.39	-14.26	-0.01
350	SLD 10	-363	1	3844	-6.39	-14.26	-0.01
350	SLD 11	-544	25	5895	-16.77	-21.19	0.05
350	SLD 12	-544	25	5895	-16.77	-21.19	0.05
350	SLD 13	-1239	13	4678	-12.24	-51.26	0.01
350	SLD 14	-1239	13	4678	-12.24	-51.26	0.01
350	SLD 15	-1293	21	5293	-15.35	-53.34	0.03
350	SLD 16	-1293	21	5293	-15.35	-53.34	0.03
350	SLV 1	2604	-10	3690	0.45	112.02	0.02
350	SLV 2	2604	-10	3690	0.45	112.02	0.02
350	SLV 3	2471	8	5153	-7.02	106.99	0.06
350	SLV 4	2471	8	5153	-7.02	106.99	0.06
350	SLV 5	908	-21	2262	4.02	39.19	-0.04
350	SLV 6	908	-21	2262	4.02	39.19	-0.04
350	SLV 7	467	37	7138	-20.86	22.44	0.1
350	SLV 8	467	37	7138	-20.86	22.44	0.1
350	SLV 9	-678	-14	2501	-0.39	-28.25	-0.05
350	SLV 10	-678	-14	2501	-0.39	-28.25	-0.05
350	SLV 11	-1118	44	7377	-25.27	-45	0.09
350	SLV 12	-1118	44	7377	-25.27	-45	0.09
350	SLV 13	-2682	15	4486	-14.23	-112.8	-0.01
350	SLV 14	-2682	15	4486	-14.23	-112.8	-0.01
350	SLV 15	-2814	33	5949	-21.7	-117.82	0.04
350	SLV 16	-2814	33	5949	-21.7	-117.82	0.04
351	SLU 1	-184	26	4163	-16.97	-6.08	0.03
351	SLU 2	-185	26	4167	-16.98	-6.13	0.03
351	SLU 3	-187	26	4269	-17.57	-6.15	0.04
351	SLU 4	-188	27	4272	-17.58	-6.17	0.04
351	SLU 5	-186	26	4236	-17.37	-6.11	0.04
351	SLU 6	-188	27	4338	-17.95	-6.13	0.04
351	SLU 7	-188	27	4340	-17.96	-6.15	0.04
351	SLU 8	-185	27	4301	-17.73	-6.05	0.04
351	SLU 9	-186	27	4303	-17.74	-6.07	0.04
351	SLU 10	-216	29	4757	-19.51	-7.18	0.04
351	SLU 11	-218	30	4859	-20.1	-7.2	0.04
351	SLU 12	-219	30	4861	-20.11	-7.22	0.04
351	SLU 13	-217	30	4825	-19.9	-7.16	0.04
351	SLU 14	-219	31	4928	-20.48	-7.18	0.04
351	SLU 15	-219	31	4930	-20.49	-7.2	0.04
351	SLU 16	-216	31	4890	-20.26	-7.1	0.04
351	SLU 17	-217	31	4892	-20.27	-7.12	0.04

Nodo	Cont.	Reazione a traslazione			Reazione a rotazione		
Ind.	N.br.	x	y	z	x	y	z
351	SLU 18	-229	31	5005	-20.58	-7.58	0.04
351	SLU 19	-229	31	5008	-20.59	-7.61	0.04
351	SLU 20	-229	32	5074	-20.97	-7.56	0.04
351	SLU 21	-230	32	5076	-20.97	-7.59	0.04
351	SLU 22	-212	29	4703	-19.45	-7.02	0.04
351	SLU 23	-213	29	4706	-19.47	-7.06	0.04
351	SLU 24	-215	30	4809	-20.06	-7.08	0.04
351	SLU 25	-216	30	4811	-20.06	-7.11	0.04
351	SLU 26	-214	30	4775	-19.85	-7.04	0.04
351	SLU 27	-216	31	4877	-20.44	-7.06	0.04
351	SLU 28	-216	31	4880	-20.45	-7.09	0.04
351	SLU 29	-213	30	4840	-20.22	-6.98	0.04
351	SLU 30	-214	31	4842	-20.23	-7.01	0.04
351	SLU 31	-244	33	5296	-22	-8.11	0.04
351	SLU 32	-246	34	5398	-22.59	-8.13	0.05
351	SLU 33	-247	34	5400	-22.6	-8.16	0.05
351	SLU 34	-245	34	5364	-22.38	-8.09	0.05
351	SLU 35	-247	35	5467	-22.97	-8.11	0.05
351	SLU 36	-247	35	5469	-22.98	-8.14	0.05
351	SLU 37	-244	34	5429	-22.75	-8.03	0.05
351	SLU 38	-245	34	5432	-22.76	-8.05	0.05
351	SLU 39	-257	35	5545	-23.07	-8.52	0.05
351	SLU 40	-257	35	5547	-23.08	-8.54	0.05
351	SLU 41	-257	35	5613	-23.45	-8.5	0.05
351	SLU 42	-258	35	5616	-23.46	-8.52	0.05
351	SLU 43	-230	32	5227	-21.2	-7.59	0.04
351	SLU 44	-231	32	5231	-21.22	-7.63	0.04
351	SLU 45	-233	33	5334	-21.81	-7.65	0.04
351	SLU 46	-233	33	5336	-21.82	-7.68	0.04
351	SLU 47	-231	33	5300	-21.6	-7.61	0.04
351	SLU 48	-233	33	5402	-22.19	-7.64	0.05
351	SLU 49	-234	33	5404	-22.2	-7.66	0.05
351	SLU 50	-231	33	5365	-21.97	-7.55	0.04
351	SLU 51	-231	33	5367	-21.98	-7.58	0.04
351	SLU 52	-262	36	5821	-23.75	-8.68	0.05
351	SLU 53	-264	37	5923	-24.34	-8.7	0.05
351	SLU 54	-264	37	5925	-24.35	-8.73	0.05
351	SLU 55	-262	36	5889	-24.13	-8.66	0.05
351	SLU 56	-264	37	5992	-24.72	-8.68	0.05
351	SLU 57	-265	37	5994	-24.73	-8.71	0.05
351	SLU 58	-262	37	5954	-24.5	-8.6	0.05
351	SLU 59	-262	37	5956	-24.51	-8.63	0.05
351	SLU 60	-274	37	6070	-24.82	-9.09	0.05
351	SLU 61	-275	37	6072	-24.83	-9.11	0.05
351	SLU 62	-275	38	6138	-25.2	-9.07	0.05
351	SLU 63	-275	38	6140	-25.21	-9.1	0.05
351	SLU 64	-258	36	5767	-23.69	-8.52	0.05
351	SLU 65	-259	36	5770	-23.71	-8.57	0.05
351	SLU 66	-261	37	5873	-24.29	-8.59	0.05
351	SLU 67	-261	37	5875	-24.3	-8.61	0.05
351	SLU 68	-259	36	5839	-24.09	-8.55	0.05
351	SLU 69	-261	37	5941	-24.68	-8.57	0.05
351	SLU 70	-262	37	5944	-24.69	-8.59	0.05
351	SLU 71	-259	37	5904	-24.46	-8.49	0.05
351	SLU 72	-259	37	5906	-24.47	-8.51	0.05
351	SLU 73	-290	40	6360	-26.24	-9.61	0.05
351	SLU 74	-292	40	6462	-26.82	-9.64	0.05
351	SLU 75	-292	40	6465	-26.83	-9.66	0.05
351	SLU 76	-290	40	6428	-26.62	-9.6	0.05
351	SLU 77	-292	41	6531	-27.21	-9.62	0.06
351	SLU 78	-293	41	6533	-27.22	-9.64	0.06
351	SLU 79	-290	41	6493	-26.99	-9.54	0.05
351	SLU 80	-290	41	6496	-27	-9.56	0.05
351	SLU 81	-302	41	6609	-27.31	-10.02	0.06
351	SLU 82	-303	41	6611	-27.32	-10.05	0.06
351	SLU 83	-303	42	6677	-27.69	-10	0.06
351	SLU 84	-303	42	6680	-27.7	-10.03	0.06
351	SLE RA 1	-192	27	4317	-17.68	-6.35	0.04
351	SLE RA 2	-193	27	4320	-17.69	-6.38	0.04
351	SLE RA 3	-194	27	4388	-18.08	-6.39	0.04
351	SLE RA 4	-195	27	4390	-18.08	-6.41	0.04
351	SLE RA 5	-193	27	4366	-17.94	-6.37	0.04
351	SLE RA 6	-194	28	4434	-18.33	-6.38	0.04
351	SLE RA 7	-195	28	4435	-18.34	-6.4	0.04
351	SLE RA 8	-193	27	4409	-18.19	-6.33	0.04
351	SLE RA 9	-193	27	4410	-18.19	-6.34	0.04
351	SLE RA 10	-214	29	4713	-19.38	-7.08	0.04
351	SLE RA 11	-215	30	4781	-19.77	-7.09	0.04
351	SLE RA 12	-215	30	4783	-19.77	-7.11	0.04
351	SLE RA 13	-214	30	4759	-19.63	-7.07	0.04
351	SLE RA 14	-215	30	4827	-20.02	-7.08	0.04
351	SLE RA 15	-216	30	4828	-20.03	-7.1	0.04
351	SLE RA 16	-214	30	4802	-19.88	-7.03	0.04
351	SLE RA 17	-214	30	4803	-19.88	-7.04	0.04
351	SLE RA 18	-222	30	4879	-20.09	-7.35	0.04
351	SLE RA 19	-222	30	4880	-20.09	-7.37	0.04
351	SLE RA 20	-222	31	4925	-20.34	-7.34	0.04
351	SLE RA 21	-222	31	4926	-20.35	-7.36	0.04
351	SLE FR 1	-192	27	4317	-17.68	-6.35	0.04
351	SLE FR 2	-192	27	4318	-17.68	-6.36	0.04
351	SLE FR 3	-192	27	4336	-17.78	-6.35	0.04

Nodo	Cont.	Reazione a traslazione			Reazione a rotazione		
Ind.	N.br.	x	y	z	x	y	z
351	SLE FR 4	-201	28	4486	-18.4	-6.66	0.04
351	SLE FR 5	-201	28	4504	-18.5	-6.65	0.04
351	SLE FR 6	-207	28	4598	-18.88	-6.85	0.04
351	SLE QP 1	-192	27	4317	-17.68	-6.35	0.04
351	SLE QP 2	-201	28	4486	-18.4	-6.65	0.04
351	SLD 1	1032	20	3997	-11.05	46.09	0.03
351	SLD 2	1032	20	3997	-11.05	46.09	0.03
351	SLD 3	965	24	4545	-18.52	43.42	0.05
351	SLD 4	965	24	4545	-18.52	43.42	0.05
351	SLD 5	269	19	3509	-4.87	13.22	0.01
351	SLD 6	269	19	3509	-4.87	13.22	0.01
351	SLD 7	48	33	5334	-29.76	4.32	0.07
351	SLD 8	48	33	5334	-29.76	4.32	0.07
351	SLD 9	-451	22	3638	-7.04	-17.63	0
351	SLD 10	-451	22	3638	-7.04	-17.63	0
351	SLD 11	-671	36	5463	-31.93	-26.52	0.07
351	SLD 12	-671	36	5463	-31.93	-26.52	0.07
351	SLD 13	-1368	31	4427	-18.28	-56.73	0.02
351	SLD 14	-1368	31	4427	-18.28	-56.73	0.02
351	SLD 15	-1434	35	4974	-25.75	-59.4	0.04
351	SLD 16	-1434	35	4974	-25.75	-59.4	0.04
351	SLV 1	2609	10	3336	-1.13	113.53	0.02
351	SLV 2	2609	10	3336	-1.13	113.53	0.02
351	SLV 3	2450	20	4635	-18.85	107.15	0.07
351	SLV 4	2450	20	4635	-18.85	107.15	0.07
351	SLV 5	883	7	2170	13.65	39.08	-0.04
351	SLV 6	883	7	2170	13.65	39.08	-0.04
351	SLV 7	353	41	6502	-45.41	17.81	0.12
351	SLV 8	353	41	6502	-45.41	17.81	0.12
351	SLV 9	-756	15	2470	8.6	-31.11	-0.04
351	SLV 10	-756	15	2470	8.6	-31.11	-0.04
351	SLV 11	-1285	48	6802	-50.45	-52.38	0.11
351	SLV 12	-1285	48	6802	-50.45	-52.38	0.11
351	SLV 13	-2852	35	4336	-17.95	-120.46	0
351	SLV 14	-2852	35	4336	-17.95	-120.46	0
351	SLV 15	-3011	46	5636	-35.67	-126.84	0.05
351	SLV 16	-3011	46	5636	-35.67	-126.84	0.05
352	SLU 1	-210	32	3843	-21.43	-7.46	0.03
352	SLU 2	-211	32	3847	-21.45	-7.5	0.03
352	SLU 3	-214	33	3939	-22.19	-7.58	0.03
352	SLU 4	-215	33	3941	-22.2	-7.61	0.03
352	SLU 5	-212	33	3909	-21.94	-7.53	0.03
352	SLU 6	-215	34	4001	-22.68	-7.61	0.03
352	SLU 7	-216	34	4003	-22.69	-7.63	0.03
352	SLU 8	-213	34	3967	-22.4	-7.51	0.03
352	SLU 9	-213	34	3969	-22.42	-7.53	0.03
352	SLU 10	-246	37	4386	-24.6	-8.75	0.03
352	SLU 11	-249	38	4478	-25.34	-8.83	0.03
352	SLU 12	-250	38	4480	-25.35	-8.86	0.03
352	SLU 13	-247	38	4448	-25.09	-8.77	0.03
352	SLU 14	-250	39	4540	-25.83	-8.85	0.03
352	SLU 15	-251	39	4542	-25.84	-8.88	0.03
352	SLU 16	-248	38	4507	-25.55	-8.76	0.03
352	SLU 17	-248	38	4509	-25.57	-8.78	0.03
352	SLU 18	-260	39	4614	-25.93	-9.25	0.03
352	SLU 19	-261	39	4616	-25.94	-9.27	0.03
352	SLU 20	-261	40	4676	-26.42	-9.27	0.03
352	SLU 21	-262	40	4678	-26.43	-9.29	0.03
352	SLU 22	-242	37	4335	-24.53	-8.59	0.03
352	SLU 23	-243	37	4338	-24.55	-8.63	0.03
352	SLU 24	-246	38	4430	-25.3	-8.71	0.03
352	SLU 25	-246	38	4433	-25.31	-8.73	0.03
352	SLU 26	-244	37	4400	-25.04	-8.65	0.03
352	SLU 27	-247	39	4492	-25.78	-8.73	0.03
352	SLU 28	-248	39	4495	-25.8	-8.75	0.03
352	SLU 29	-244	38	4459	-25.51	-8.63	0.03
352	SLU 30	-245	38	4461	-25.52	-8.66	0.03
352	SLU 31	-278	41	4878	-27.7	-9.87	0.04
352	SLU 32	-281	43	4970	-28.45	-9.95	0.04
352	SLU 33	-281	43	4972	-28.46	-9.98	0.04
352	SLU 34	-279	42	4940	-28.19	-9.9	0.04
352	SLU 35	-282	43	5032	-28.94	-9.98	0.04
352	SLU 36	-282	43	5034	-28.95	-10	0.04
352	SLU 37	-279	43	4998	-28.66	-9.88	0.04
352	SLU 38	-280	43	5000	-28.67	-9.9	0.04
352	SLU 39	-292	43	5106	-29.03	-10.37	0.04
352	SLU 40	-292	43	5108	-29.04	-10.39	0.04
352	SLU 41	-293	44	5168	-29.52	-10.39	0.04
352	SLU 42	-293	44	5170	-29.53	-10.41	0.04
352	SLU 43	-262	40	4827	-26.79	-9.32	0.03
352	SLU 44	-263	40	4831	-26.81	-9.36	0.03
352	SLU 45	-266	41	4923	-27.56	-9.44	0.04
352	SLU 46	-267	41	4925	-27.57	-9.46	0.04
352	SLU 47	-265	41	4893	-27.3	-9.38	0.04
352	SLU 48	-268	42	4985	-28.04	-9.46	0.04
352	SLU 49	-268	42	4987	-28.06	-9.49	0.04
352	SLU 50	-265	42	4951	-27.77	-9.36	0.04
352	SLU 51	-266	42	4953	-27.78	-9.39	0.04
352	SLU 52	-298	45	5371	-29.96	-10.61	0.04
352	SLU 53	-301	46	5463	-30.71	-10.69	0.04
352	SLU 54	-302	46	5465	-30.72	-10.71	0.04

Nodo	Cont.	Reazione a traslazione			Reazione a rotazione		
Ind.	N.br.	x	y	z	x	y	z
352	SLU 55	-299	46	5432	-30.45	-10.63	0.04
352	SLU 56	-302	47	5525	-31.19	-10.71	0.04
352	SLU 57	-303	47	5527	-31.21	-10.73	0.04
352	SLU 58	-300	46	5491	-30.92	-10.61	0.04
352	SLU 59	-300	46	5493	-30.93	-10.63	0.04
352	SLU 60	-312	47	5598	-31.29	-11.1	0.04
352	SLU 61	-313	47	5600	-31.3	-11.12	0.04
352	SLU 62	-313	48	5660	-31.78	-11.12	0.04
352	SLU 63	-314	48	5662	-31.79	-11.15	0.04
352	SLU 64	-294	45	5319	-29.9	-10.44	0.04
352	SLU 65	-295	45	5323	-29.92	-10.48	0.04
352	SLU 66	-298	46	5415	-30.66	-10.56	0.04
352	SLU 67	-299	46	5417	-30.67	-10.58	0.04
352	SLU 68	-296	46	5385	-30.41	-10.5	0.04
352	SLU 69	-299	47	5477	-31.15	-10.58	0.04
352	SLU 70	-300	47	5479	-31.16	-10.61	0.04
352	SLU 71	-296	46	5443	-30.87	-10.49	0.04
352	SLU 72	-297	46	5445	-30.89	-10.51	0.04
352	SLU 73	-330	49	5862	-33.07	-11.73	0.04
352	SLU 74	-333	51	5954	-33.81	-11.81	0.04
352	SLU 75	-333	51	5956	-33.82	-11.83	0.04
352	SLU 76	-331	50	5924	-33.56	-11.75	0.04
352	SLU 77	-334	51	6016	-34.3	-11.83	0.04
352	SLU 78	-335	51	6018	-34.31	-11.85	0.04
352	SLU 79	-331	51	5983	-34.02	-11.73	0.04
352	SLU 80	-332	51	5985	-34.04	-11.76	0.04
352	SLU 81	-344	51	6090	-34.4	-12.22	0.04
352	SLU 82	-344	51	6092	-34.41	-12.25	0.04
352	SLU 83	-345	52	6152	-34.88	-12.24	0.05
352	SLU 84	-346	52	6154	-34.9	-12.27	0.05
352	SLE RA 1	-219	33	3984	-22.31	-7.78	0.03
352	SLE RA 2	-220	33	3986	-22.33	-7.81	0.03
352	SLE RA 3	-222	34	4047	-22.82	-7.86	0.03
352	SLE RA 4	-222	34	4049	-22.83	-7.88	0.03
352	SLE RA 5	-221	34	4027	-22.65	-7.83	0.03
352	SLE RA 6	-223	35	4089	-23.15	-7.88	0.03
352	SLE RA 7	-223	35	4090	-23.16	-7.9	0.03
352	SLE RA 8	-221	34	4066	-22.97	-7.81	0.03
352	SLE RA 9	-221	34	4068	-22.97	-7.83	0.03
352	SLE RA 10	-243	37	4346	-24.43	-8.64	0.03
352	SLE RA 11	-245	37	4407	-24.92	-8.7	0.03
352	SLE RA 12	-245	37	4408	-24.93	-8.71	0.03
352	SLE RA 13	-244	37	4387	-24.75	-8.66	0.03
352	SLE RA 14	-246	38	4448	-25.25	-8.71	0.03
352	SLE RA 15	-246	38	4450	-25.26	-8.73	0.03
352	SLE RA 16	-244	38	4426	-25.07	-8.65	0.03
352	SLE RA 17	-244	38	4427	-25.07	-8.66	0.03
352	SLE RA 18	-252	38	4497	-25.31	-8.97	0.03
352	SLE RA 19	-253	38	4499	-25.32	-8.99	0.03
352	SLE RA 20	-253	38	4539	-25.64	-8.99	0.03
352	SLE RA 21	-254	38	4540	-25.65	-9	0.03
352	SLE FR 1	-219	33	3984	-22.31	-7.78	0.03
352	SLE FR 2	-219	33	3984	-22.32	-7.79	0.03
352	SLE FR 3	-220	34	4000	-22.44	-7.79	0.03
352	SLE FR 4	-229	35	4138	-23.22	-8.15	0.03
352	SLE FR 5	-229	35	4154	-23.34	-8.15	0.03
352	SLE FR 6	-236	36	4241	-23.81	-8.38	0.03
352	SLE QP 1	-219	33	3984	-22.31	-7.78	0.03
352	SLE QP 2	-229	35	4138	-23.21	-8.14	0.03
352	SLD 1	1067	25	3649	-13.51	47.07	0.02
352	SLD 2	1067	25	3649	-13.51	47.07	0.02
352	SLD 3	1001	35	4149	-25.94	44.57	0.04
352	SLD 4	1001	35	4149	-25.94	44.57	0.04
352	SLD 5	260	18	3233	-1.46	12.22	0
352	SLD 6	260	18	3233	-1.46	12.22	0
352	SLD 7	40	49	4899	-42.88	3.87	0.07
352	SLD 8	40	49	4899	-42.88	3.87	0.07
352	SLD 9	-498	21	3376	-3.55	-20.16	-0.01
352	SLD 10	-498	21	3376	-3.55	-20.16	-0.01
352	SLD 11	-718	52	5043	-44.97	-28.5	0.06
352	SLD 12	-718	52	5043	-44.97	-28.5	0.06
352	SLD 13	-1459	35	4127	-20.49	-60.85	0.02
352	SLD 14	-1459	35	4127	-20.49	-60.85	0.02
352	SLD 15	-1525	44	4627	-32.92	-63.35	0.04
352	SLD 16	-1525	44	4627	-32.92	-63.35	0.04
352	SLV 1	2724	12	2995	-0.31	117.63	0.01
352	SLV 2	2724	12	2995	-0.31	117.63	0.01
352	SLV 3	2566	35	4180	-29.69	111.66	0.06
352	SLV 4	2566	35	4180	-29.69	111.66	0.06
352	SLV 5	895	-6	1999	28.23	38.66	-0.05
352	SLV 6	895	-6	1999	28.23	38.66	-0.05
352	SLV 7	371	69	5947	-69.73	18.73	0.12
352	SLV 8	371	69	5947	-69.73	18.73	0.12
352	SLV 9	-829	1	2329	23.3	-35.02	-0.06
352	SLV 10	-829	1	2329	23.3	-35.02	-0.06
352	SLV 11	-1354	75	6277	-74.65	-54.94	0.11
352	SLV 12	-1354	75	6277	-74.65	-54.94	0.11
352	SLV 13	-3024	35	4096	-16.73	-127.94	0
352	SLV 14	-3024	35	4096	-16.73	-127.94	0
352	SLV 15	-3182	57	5280	-46.12	-133.92	0.05
352	SLV 16	-3182	57	5280	-46.12	-133.92	0.05

Nodo	Cont.	Reazione a traslazione			Reazione a rotazione		
Ind.	N.br.	x	y	z	x	y	z
353	SLU 1	-149	32	3569	-23.27	-5.25	0.01
353	SLU 2	-150	32	3572	-23.3	-5.29	0.01
353	SLU 3	-151	34	3656	-24.11	-5.31	0.01
353	SLU 4	-152	34	3658	-24.12	-5.33	0.01
353	SLU 5	-150	33	3629	-23.83	-5.27	0.01
353	SLU 6	-151	34	3712	-24.64	-5.29	0.01
353	SLU 7	-152	34	3714	-24.66	-5.31	0.01
353	SLU 8	-149	34	3682	-24.34	-5.22	0.01
353	SLU 9	-150	34	3684	-24.36	-5.24	0.01
353	SLU 10	-175	37	4069	-26.69	-6.21	0.01
353	SLU 11	-177	38	4152	-27.5	-6.22	0.01
353	SLU 12	-177	38	4154	-27.51	-6.24	0.01
353	SLU 13	-175	38	4125	-27.22	-6.19	0.01
353	SLU 14	-177	39	4208	-28.03	-6.2	0.01
353	SLU 15	-177	39	4210	-28.05	-6.22	0.01
353	SLU 16	-175	39	4178	-27.73	-6.13	0.01
353	SLU 17	-175	39	4180	-27.75	-6.15	0.01
353	SLU 18	-185	39	4278	-28.12	-6.56	0.01
353	SLU 19	-186	39	4280	-28.13	-6.58	0.01
353	SLU 20	-185	40	4334	-28.65	-6.54	0.01
353	SLU 21	-186	40	4336	-28.67	-6.56	0.01
353	SLU 22	-172	37	4020	-26.63	-6.06	0.01
353	SLU 23	-173	37	4023	-26.65	-6.09	0.01
353	SLU 24	-174	38	4107	-27.46	-6.11	0.01
353	SLU 25	-174	38	4109	-27.47	-6.13	0.01
353	SLU 26	-173	38	4080	-27.18	-6.08	0.01
353	SLU 27	-174	39	4163	-27.99	-6.09	0.01
353	SLU 28	-174	39	4165	-28.01	-6.11	0.01
353	SLU 29	-172	39	4133	-27.69	-6.02	0.01
353	SLU 30	-172	39	4135	-27.71	-6.04	0.01
353	SLU 31	-198	42	4520	-30.04	-7.01	0.01
353	SLU 32	-199	43	4603	-30.85	-7.02	0.01
353	SLU 33	-200	43	4605	-30.87	-7.05	0.01
353	SLU 34	-198	42	4576	-30.58	-6.99	0.01
353	SLU 35	-199	44	4659	-31.39	-7	0.01
353	SLU 36	-200	44	4661	-31.4	-7.03	0.01
353	SLU 37	-197	43	4629	-31.08	-6.93	0.01
353	SLU 38	-198	43	4631	-31.1	-6.96	0.01
353	SLU 39	-208	44	4729	-31.47	-7.36	0.01
353	SLU 40	-208	44	4731	-31.49	-7.38	0.01
353	SLU 41	-208	44	4785	-32	-7.34	0.01
353	SLU 42	-208	44	4787	-32.02	-7.37	0.01
353	SLU 43	-186	41	4485	-29.11	-6.56	0.01
353	SLU 44	-187	41	4489	-29.13	-6.59	0.01
353	SLU 45	-188	42	4572	-29.94	-6.61	0.01
353	SLU 46	-189	42	4574	-29.96	-6.63	0.01
353	SLU 47	-187	41	4545	-29.67	-6.57	0.01
353	SLU 48	-188	42	4628	-30.47	-6.59	0.01
353	SLU 49	-189	42	4630	-30.49	-6.61	0.01
353	SLU 50	-186	42	4598	-30.17	-6.52	0.01
353	SLU 51	-187	42	4600	-30.19	-6.54	0.01
353	SLU 52	-212	45	4985	-32.52	-7.51	0.01
353	SLU 53	-214	46	5068	-33.33	-7.52	0.01
353	SLU 54	-214	46	5070	-33.35	-7.55	0.01
353	SLU 55	-212	46	5041	-33.06	-7.49	0.01
353	SLU 56	-214	47	5125	-33.87	-7.5	0.01
353	SLU 57	-214	47	5127	-33.88	-7.53	0.01
353	SLU 58	-212	47	5094	-33.57	-7.43	0.01
353	SLU 59	-212	47	5096	-33.58	-7.45	0.01
353	SLU 60	-222	47	5194	-33.95	-7.86	0.01
353	SLU 61	-223	47	5196	-33.97	-7.88	0.01
353	SLU 62	-222	48	5250	-34.49	-7.84	0.01
353	SLU 63	-223	48	5252	-34.5	-7.87	0.01
353	SLU 64	-209	45	4936	-32.46	-7.36	0.01
353	SLU 65	-210	45	4939	-32.48	-7.4	0.01
353	SLU 66	-211	46	5023	-33.29	-7.41	0.01
353	SLU 67	-211	46	5025	-33.31	-7.43	0.01
353	SLU 68	-210	46	4996	-33.02	-7.38	0.01
353	SLU 69	-211	47	5079	-33.83	-7.39	0.01
353	SLU 70	-211	47	5081	-33.84	-7.41	0.01
353	SLU 71	-209	47	5049	-33.53	-7.32	0.01
353	SLU 72	-209	47	5051	-33.54	-7.34	0.01
353	SLU 73	-235	50	5436	-35.87	-8.31	0.01
353	SLU 74	-236	51	5519	-36.68	-8.32	0.01
353	SLU 75	-237	51	5521	-36.7	-8.35	0.01
353	SLU 76	-235	51	5492	-36.41	-8.29	0.01
353	SLU 77	-236	52	5576	-37.22	-8.31	0.01
353	SLU 78	-237	52	5578	-37.23	-8.33	0.01
353	SLU 79	-234	51	5545	-36.92	-8.23	0.01
353	SLU 80	-235	51	5547	-36.93	-8.26	0.01
353	SLU 81	-245	52	5645	-37.3	-8.66	0.01
353	SLU 82	-245	52	5647	-37.32	-8.69	0.01
353	SLU 83	-245	53	5701	-37.84	-8.64	0.01
353	SLU 84	-245	53	5703	-37.85	-8.67	0.01
353	SLE RA 1	-156	34	3698	-24.23	-5.48	0.01
353	SLE RA 2	-156	34	3700	-24.25	-5.51	0.01
353	SLE RA 3	-157	34	3756	-24.79	-5.52	0.01
353	SLE RA 4	-157	35	3757	-24.8	-5.53	0.01
353	SLE RA 5	-156	34	3738	-24.6	-5.5	0.01
353	SLE RA 6	-157	35	3793	-25.14	-5.51	0.01
353	SLE RA 7	-157	35	3795	-25.15	-5.52	0.01

Nodo	Cont.	Reazione a traslazione			Reazione a rotazione		
Ind.	N.br.	x	y	z	x	y	z
353	SLE RA 8	-156	35	3773	-24.94	-5.46	0.01
353	SLE RA 9	-156	35	3774	-24.95	-5.47	0.01
353	SLE RA 10	-173	37	4031	-26.51	-6.12	0.01
353	SLE RA 11	-174	38	4087	-27.05	-6.13	0.01
353	SLE RA 12	-174	38	4088	-27.06	-6.14	0.01
353	SLE RA 13	-173	37	4069	-26.86	-6.11	0.01
353	SLE RA 14	-174	38	4124	-27.4	-6.12	0.01
353	SLE RA 15	-174	38	4126	-27.41	-6.13	0.01
353	SLE RA 16	-173	38	4104	-27.2	-6.07	0.01
353	SLE RA 17	-173	38	4105	-27.21	-6.08	0.01
353	SLE RA 18	-180	38	4170	-27.46	-6.35	0.01
353	SLE RA 19	-180	38	4172	-27.47	-6.37	0.01
353	SLE RA 20	-180	39	4208	-27.82	-6.34	0.01
353	SLE RA 21	-180	39	4209	-27.83	-6.36	0.01
353	SLE FR 1	-156	34	3698	-24.23	-5.48	0.01
353	SLE FR 2	-156	34	3698	-24.23	-5.49	0.01
353	SLE FR 3	-156	34	3713	-24.37	-5.48	0.01
353	SLE FR 4	-163	35	3840	-25.2	-5.75	0.01
353	SLE FR 5	-163	35	3855	-25.34	-5.74	0.01
353	SLE FR 6	-168	36	3934	-25.85	-5.92	0.01
353	SLE QP 1	-156	34	3698	-24.23	-5.48	0.01
353	SLE QP 2	-163	35	3840	-25.2	-5.75	0.01
353	SLD 1	1207	24	3415	-19.98	52.53	0
353	SLD 2	1207	24	3415	-19.98	52.53	0
353	SLD 3	1146	39	3889	-36.51	49.94	0.02
353	SLD 4	1146	39	3889	-36.51	49.94	0.02
353	SLD 5	341	9	2994	1.44	15.66	-0.01
353	SLD 6	341	9	2994	1.44	15.66	-0.01
353	SLD 7	137	59	4573	-53.67	7.04	0.03
353	SLD 8	137	59	4573	-53.67	7.04	0.03
353	SLD 9	-463	11	3106	3.27	-18.53	-0.01
353	SLD 10	-463	11	3106	3.27	-18.53	-0.01
353	SLD 11	-666	61	4686	-51.84	-27.15	0.03
353	SLD 12	-666	61	4686	-51.84	-27.15	0.03
353	SLD 13	-1471	31	3791	-13.89	-61.43	0
353	SLD 14	-1471	31	3791	-13.89	-61.43	0
353	SLD 15	-1532	46	4265	-30.42	-64.02	0.01
353	SLD 16	-1532	46	4265	-30.42	-64.02	0.01
353	SLV 1	2956	9	2848	-13.01	126.98	0
353	SLV 2	2956	9	2848	-13.01	126.98	0
353	SLV 3	2811	44	3969	-52.06	120.83	0.03
353	SLV 4	2811	44	3969	-52.06	120.83	0.03
353	SLV 5	993	-27	1842	37.69	43.39	-0.04
353	SLV 6	993	-27	1842	37.69	43.39	-0.04
353	SLV 7	509	92	5579	-92.49	22.9	0.06
353	SLV 8	509	92	5579	-92.49	22.9	0.06
353	SLV 9	-835	-22	2101	42.09	-34.39	-0.04
353	SLV 10	-835	-22	2101	42.09	-34.39	-0.04
353	SLV 11	-1318	97	5837	-88.09	-54.88	0.06
353	SLV 12	-1318	97	5837	-88.09	-54.88	0.06
353	SLV 13	-3136	26	3710	1.66	-132.32	-0.01
353	SLV 14	-3136	26	3710	1.66	-132.32	-0.01
353	SLV 15	-3282	62	4831	-37.39	-138.47	0.02
353	SLV 16	-3282	62	4831	-37.39	-138.47	0.02
354	SLU 1	-20	31	3418	-23.72	-0.33	-0.01
354	SLU 2	-21	31	3421	-23.74	-0.35	-0.01
354	SLU 3	-18	32	3500	-24.57	-0.22	-0.01
354	SLU 4	-19	32	3502	-24.59	-0.24	-0.01
354	SLU 5	-19	32	3475	-24.29	-0.24	-0.01
354	SLU 6	-16	33	3554	-25.12	-0.11	-0.01
354	SLU 7	-16	33	3556	-25.13	-0.12	-0.01
354	SLU 8	-15	32	3525	-24.81	-0.09	-0.01
354	SLU 9	-16	32	3527	-24.83	-0.11	-0.01
354	SLU 10	-26	35	3893	-27.18	-0.47	-0.01
354	SLU 11	-23	36	3972	-28.01	-0.34	-0.01
354	SLU 12	-24	36	3974	-28.03	-0.35	-0.01
354	SLU 13	-24	36	3947	-27.73	-0.35	-0.01
354	SLU 14	-21	37	4026	-28.56	-0.22	-0.01
354	SLU 15	-21	37	4028	-28.57	-0.24	-0.01
354	SLU 16	-20	37	3997	-28.25	-0.21	-0.01
354	SLU 17	-21	37	3999	-28.27	-0.22	-0.01
354	SLU 18	-27	37	4092	-28.63	-0.49	-0.01
354	SLU 19	-28	37	4094	-28.65	-0.51	-0.01
354	SLU 20	-25	38	4146	-29.18	-0.37	-0.01
354	SLU 21	-25	38	4148	-29.2	-0.39	-0.01
354	SLU 22	-24	35	3846	-27.12	-0.38	-0.01
354	SLU 23	-24	35	3849	-27.15	-0.41	-0.01
354	SLU 24	-22	36	3928	-27.98	-0.28	-0.01
354	SLU 25	-22	36	3930	-27.99	-0.29	-0.01
354	SLU 26	-22	36	3903	-27.7	-0.29	-0.01
354	SLU 27	-19	37	3982	-28.52	-0.16	-0.01
354	SLU 28	-20	37	3984	-28.54	-0.17	-0.01
354	SLU 29	-19	37	3954	-28.22	-0.14	-0.01
354	SLU 30	-19	37	3956	-28.23	-0.16	-0.01
354	SLU 31	-29	40	4321	-30.59	-0.52	-0.01
354	SLU 32	-27	41	4401	-31.42	-0.39	-0.01
354	SLU 33	-27	41	4402	-31.43	-0.41	-0.01
354	SLU 34	-27	40	4375	-31.14	-0.4	-0.01
354	SLU 35	-24	42	4454	-31.96	-0.27	-0.01
354	SLU 36	-24	42	4456	-31.98	-0.29	-0.01
354	SLU 37	-24	41	4426	-31.66	-0.26	-0.01

Nodo	Cont.	Reazione a traslazione			Reazione a rotazione		
Ind.	N.br.	x	y	z	x	y	z
354	SLU 38	-24	41	4428	-31.67	-0.27	-0.01
354	SLU 39	-31	42	4520	-32.04	-0.54	-0.01
354	SLU 40	-31	42	4522	-32.06	-0.56	-0.01
354	SLU 41	-28	42	4574	-32.59	-0.42	-0.01
354	SLU 42	-29	42	4576	-32.6	-0.44	-0.01
354	SLU 43	-25	39	4296	-29.66	-0.41	-0.01
354	SLU 44	-26	39	4300	-29.69	-0.43	-0.01
354	SLU 45	-23	40	4379	-30.52	-0.3	-0.01
354	SLU 46	-24	40	4381	-30.53	-0.32	-0.01
354	SLU 47	-24	39	4353	-30.24	-0.32	-0.01
354	SLU 48	-21	41	4432	-31.06	-0.19	-0.01
354	SLU 49	-21	41	4434	-31.08	-0.2	-0.01
354	SLU 50	-20	40	4404	-30.76	-0.17	-0.01
354	SLU 51	-21	40	4406	-30.77	-0.19	-0.01
354	SLU 52	-31	43	4772	-33.13	-0.55	-0.01
354	SLU 53	-28	44	4851	-33.96	-0.42	-0.01
354	SLU 54	-29	44	4853	-33.97	-0.43	-0.01
354	SLU 55	-29	44	4825	-33.68	-0.43	-0.01
354	SLU 56	-26	45	4904	-34.5	-0.3	-0.02
354	SLU 57	-26	45	4906	-34.52	-0.32	-0.02
354	SLU 58	-25	45	4876	-34.2	-0.29	-0.02
354	SLU 59	-26	45	4878	-34.21	-0.3	-0.02
354	SLU 60	-33	45	4971	-34.58	-0.57	-0.02
354	SLU 61	-33	45	4973	-34.6	-0.59	-0.02
354	SLU 62	-30	46	5024	-35.13	-0.45	-0.02
354	SLU 63	-30	46	5026	-35.14	-0.47	-0.02
354	SLU 64	-29	43	4725	-33.07	-0.46	-0.01
354	SLU 65	-29	43	4728	-33.1	-0.49	-0.01
354	SLU 66	-27	44	4807	-33.92	-0.36	-0.01
354	SLU 67	-27	44	4809	-33.94	-0.37	-0.01
354	SLU 68	-27	44	4782	-33.64	-0.37	-0.01
354	SLU 69	-24	45	4861	-34.47	-0.24	-0.02
354	SLU 70	-25	45	4863	-34.49	-0.25	-0.02
354	SLU 71	-24	45	4832	-34.16	-0.22	-0.02
354	SLU 72	-24	45	4834	-34.18	-0.24	-0.02
354	SLU 73	-34	48	5200	-36.54	-0.6	-0.02
354	SLU 74	-32	49	5279	-37.36	-0.47	-0.02
354	SLU 75	-32	49	5281	-37.38	-0.49	-0.02
354	SLU 76	-32	48	5254	-37.09	-0.48	-0.02
354	SLU 77	-29	49	5333	-37.91	-0.35	-0.02
354	SLU 78	-29	49	5335	-37.93	-0.37	-0.02
354	SLU 79	-29	49	5304	-37.6	-0.34	-0.02
354	SLU 80	-29	49	5306	-37.62	-0.35	-0.02
354	SLU 81	-36	49	5399	-37.99	-0.62	-0.02
354	SLU 82	-36	49	5401	-38	-0.64	-0.02
354	SLU 83	-33	50	5453	-38.53	-0.5	-0.02
354	SLU 84	-34	50	5455	-38.55	-0.52	-0.02
354	SLE RA 1	-21	32	3540	-24.69	-0.34	-0.01
354	SLE RA 2	-22	32	3542	-24.71	-0.36	-0.01
354	SLE RA 3	-20	33	3595	-25.26	-0.27	-0.01
354	SLE RA 4	-20	33	3596	-25.27	-0.28	-0.01
354	SLE RA 5	-20	33	3578	-25.07	-0.28	-0.01
354	SLE RA 6	-18	33	3631	-25.62	-0.19	-0.01
354	SLE RA 7	-19	33	3632	-25.63	-0.21	-0.01
354	SLE RA 8	-18	33	3612	-25.42	-0.18	-0.01
354	SLE RA 9	-18	33	3613	-25.43	-0.2	-0.01
354	SLE RA 10	-25	35	3857	-27	-0.44	-0.01
354	SLE RA 11	-23	36	3910	-27.55	-0.35	-0.01
354	SLE RA 12	-24	36	3911	-27.56	-0.36	-0.01
354	SLE RA 13	-23	36	3893	-27.37	-0.36	-0.01
354	SLE RA 14	-22	36	3946	-27.92	-0.27	-0.01
354	SLE RA 15	-22	36	3947	-27.93	-0.28	-0.01
354	SLE RA 16	-21	36	3927	-27.71	-0.26	-0.01
354	SLE RA 17	-22	36	3928	-27.72	-0.27	-0.01
354	SLE RA 18	-26	36	3990	-27.97	-0.45	-0.01
354	SLE RA 19	-26	36	3991	-27.98	-0.46	-0.01
354	SLE RA 20	-24	37	4026	-28.33	-0.37	-0.01
354	SLE RA 21	-25	37	4027	-28.34	-0.38	-0.01
354	SLE FR 1	-21	32	3540	-24.69	-0.34	-0.01
354	SLE FR 2	-21	32	3541	-24.69	-0.34	-0.01
354	SLE FR 3	-21	32	3555	-24.84	-0.31	-0.01
354	SLE FR 4	-23	33	3675	-25.68	-0.38	-0.01
354	SLE FR 5	-22	34	3689	-25.82	-0.34	-0.01
354	SLE FR 6	-24	34	3765	-26.33	-0.4	-0.01
354	SLE QP 1	-21	32	3540	-24.69	-0.34	-0.01
354	SLE QP 2	-23	33	3675	-25.67	-0.37	-0.01
354	SLD 1	1341	22	3374	-18.99	57.44	-0.01
354	SLD 2	1341	22	3374	-18.99	57.44	-0.01
354	SLD 3	1395	40	3841	-37.84	59.68	-0.01
354	SLD 4	1395	40	3841	-37.84	59.68	-0.01
354	SLD 5	303	2	2876	4.94	13.57	-0.01
354	SLD 6	303	2	2876	4.94	13.57	-0.01
354	SLD 7	486	63	4433	-57.93	21.04	-0.02
354	SLD 8	486	63	4433	-57.93	21.04	-0.02
354	SLD 9	-531	4	2917	6.58	-21.79	-0.01
354	SLD 10	-531	4	2917	6.58	-21.79	-0.01
354	SLD 11	-349	65	4474	-56.28	-14.32	-0.02
354	SLD 12	-349	65	4474	-56.28	-14.32	-0.02
354	SLD 13	-1441	27	3509	-13.5	-60.43	-0.01
354	SLD 14	-1441	27	3509	-13.5	-60.43	-0.01
354	SLD 15	-1386	45	3976	-32.36	-58.19	-0.02

Nodo	Cont.	Reazione a traslazione			Reazione a rotazione		
Ind.	N.br.	x	y	z	x	y	z
354	SLD 16	-1386	45	3976	-32.36	-58.19	-0.02
354	SLV 1	3076	5	2966	-10.19	131.03	0
354	SLV 2	3076	5	2966	-10.19	131.03	0
354	SLV 3	3206	48	4070	-54.72	136.36	-0.01
354	SLV 4	3206	48	4070	-54.72	136.36	-0.01
354	SLV 5	709	-41	1788	46.52	30.96	0
354	SLV 6	709	-41	1788	46.52	30.96	0
354	SLV 7	1143	104	5468	-101.94	48.73	-0.02
354	SLV 8	1143	104	5468	-101.94	48.73	-0.02
354	SLV 9	-1189	-37	1882	50.59	-49.48	0
354	SLV 10	-1189	-37	1882	50.59	-49.48	0
354	SLV 11	-755	108	5562	-97.87	-31.71	-0.02
354	SLV 12	-755	108	5562	-97.87	-31.71	-0.02
354	SLV 13	-3252	18	3280	3.38	-137.11	-0.01
354	SLV 14	-3252	18	3280	3.38	-137.11	-0.01
354	SLV 15	-3122	62	4384	-41.16	-131.78	-0.02
354	SLV 16	-3122	62	4384	-41.16	-131.78	-0.02
355	SLU 1	131	31	3434	-23.81	4.85	-0.03
355	SLU 2	131	31	3438	-23.84	4.83	-0.03
355	SLU 3	138	32	3518	-24.67	5.11	-0.03
355	SLU 4	138	32	3520	-24.69	5.1	-0.03
355	SLU 5	136	32	3493	-24.39	5.05	-0.03
355	SLU 6	143	33	3573	-25.22	5.33	-0.03
355	SLU 7	143	33	3575	-25.24	5.32	-0.03
355	SLU 8	142	33	3544	-24.91	5.28	-0.03
355	SLU 9	142	33	3546	-24.93	5.27	-0.03
355	SLU 10	150	36	3912	-27.3	5.51	-0.04
355	SLU 11	157	37	3992	-28.13	5.79	-0.04
355	SLU 12	157	37	3994	-28.15	5.78	-0.04
355	SLU 13	155	36	3967	-27.85	5.73	-0.04
355	SLU 14	162	37	4047	-28.68	6.01	-0.04
355	SLU 15	162	37	4049	-28.7	6	-0.04
355	SLU 16	161	37	4018	-28.37	5.96	-0.04
355	SLU 17	161	37	4021	-28.39	5.95	-0.04
355	SLU 18	158	37	4112	-28.75	5.82	-0.04
355	SLU 19	158	37	4114	-28.77	5.81	-0.04
355	SLU 20	164	38	4167	-29.3	6.04	-0.04
355	SLU 21	163	38	4169	-29.32	6.03	-0.04
355	SLU 22	150	35	3865	-27.24	5.55	-0.04
355	SLU 23	150	36	3869	-27.26	5.53	-0.04
355	SLU 24	157	37	3949	-28.09	5.81	-0.04
355	SLU 25	157	37	3951	-28.11	5.8	-0.04
355	SLU 26	155	36	3924	-27.82	5.75	-0.04
355	SLU 27	163	37	4004	-28.64	6.03	-0.04
355	SLU 28	162	37	4006	-28.66	6.02	-0.04
355	SLU 29	161	37	3975	-28.34	5.98	-0.04
355	SLU 30	161	37	3977	-28.35	5.97	-0.04
355	SLU 31	169	40	4343	-30.72	6.21	-0.04
355	SLU 32	176	41	4423	-31.55	6.49	-0.04
355	SLU 33	176	41	4425	-31.57	6.48	-0.04
355	SLU 34	174	41	4398	-31.27	6.43	-0.04
355	SLU 35	182	42	4478	-32.1	6.71	-0.04
355	SLU 36	181	42	4480	-32.12	6.7	-0.04
355	SLU 37	180	41	4449	-31.8	6.66	-0.04
355	SLU 38	180	41	4452	-31.81	6.65	-0.04
355	SLU 39	177	42	4543	-32.18	6.52	-0.04
355	SLU 40	177	42	4545	-32.2	6.51	-0.04
355	SLU 41	183	43	4598	-32.73	6.74	-0.04
355	SLU 42	183	43	4600	-32.75	6.73	-0.04
355	SLU 43	164	39	4317	-29.78	6.06	-0.04
355	SLU 44	163	39	4320	-29.81	6.04	-0.04
355	SLU 45	170	40	4400	-30.64	6.32	-0.04
355	SLU 46	170	40	4402	-30.66	6.31	-0.04
355	SLU 47	169	40	4375	-30.36	6.26	-0.04
355	SLU 48	176	41	4455	-31.19	6.54	-0.04
355	SLU 49	176	41	4457	-31.21	6.53	-0.04
355	SLU 50	175	40	4426	-30.88	6.5	-0.04
355	SLU 51	175	40	4428	-30.9	6.49	-0.04
355	SLU 52	182	43	4795	-33.27	6.72	-0.05
355	SLU 53	189	44	4875	-34.1	7	-0.05
355	SLU 54	189	44	4877	-34.11	6.99	-0.05
355	SLU 55	188	44	4850	-33.82	6.94	-0.05
355	SLU 56	195	45	4930	-34.65	7.22	-0.05
355	SLU 57	195	45	4932	-34.66	7.21	-0.05
355	SLU 58	194	45	4901	-34.34	7.18	-0.05
355	SLU 59	194	45	4903	-34.36	7.17	-0.05
355	SLU 60	191	45	4995	-34.72	7.03	-0.05
355	SLU 61	191	45	4997	-34.74	7.02	-0.05
355	SLU 62	196	46	5050	-35.27	7.25	-0.05
355	SLU 63	196	46	5052	-35.29	7.24	-0.05
355	SLU 64	183	43	4748	-33.21	6.76	-0.05
355	SLU 65	183	43	4751	-33.23	6.74	-0.05
355	SLU 66	190	44	4831	-34.06	7.02	-0.05
355	SLU 67	189	44	4833	-34.08	7.01	-0.05
355	SLU 68	188	44	4806	-33.78	6.96	-0.05
355	SLU 69	195	45	4886	-34.61	7.24	-0.05
355	SLU 70	195	45	4888	-34.63	7.23	-0.05
355	SLU 71	194	45	4857	-34.31	7.2	-0.05
355	SLU 72	194	45	4859	-34.32	7.19	-0.05
355	SLU 73	202	48	5226	-36.69	7.42	-0.05
355	SLU 74	209	49	5306	-37.52	7.7	-0.05

Nodo	Cont.	Reazione a traslazione			Reazione a rotazione		
Ind.	N.br.	x	y	z	x	y	z
355	SLU 75	208	49	5308	-37.54	7.69	-0.05
355	SLU 76	207	49	5281	-37.24	7.64	-0.05
355	SLU 77	214	50	5361	-38.07	7.92	-0.05
355	SLU 78	214	50	5363	-38.09	7.91	-0.05
355	SLU 79	213	49	5332	-37.77	7.88	-0.05
355	SLU 80	213	49	5334	-37.78	7.87	-0.05
355	SLU 81	210	50	5426	-38.15	7.73	-0.05
355	SLU 82	210	50	5428	-38.16	7.72	-0.05
355	SLU 83	216	50	5481	-38.7	7.95	-0.05
355	SLU 84	215	50	5483	-38.71	7.94	-0.05
355	SLE RA 1	136	32	3558	-24.79	5.05	-0.03
355	SLE RA 2	136	32	3560	-24.81	5.03	-0.03
355	SLE RA 3	141	33	3613	-25.36	5.22	-0.03
355	SLE RA 4	141	33	3615	-25.37	5.21	-0.03
355	SLE RA 5	140	33	3596	-25.18	5.18	-0.03
355	SLE RA 6	145	34	3650	-25.73	5.37	-0.04
355	SLE RA 7	145	34	3651	-25.74	5.36	-0.04
355	SLE RA 8	144	33	3631	-25.52	5.34	-0.04
355	SLE RA 9	144	33	3632	-25.54	5.33	-0.04
355	SLE RA 10	149	35	3876	-27.11	5.49	-0.04
355	SLE RA 11	154	36	3930	-27.67	5.68	-0.04
355	SLE RA 12	154	36	3931	-27.68	5.67	-0.04
355	SLE RA 13	153	36	3913	-27.48	5.63	-0.04
355	SLE RA 14	157	37	3966	-28.03	5.82	-0.04
355	SLE RA 15	157	37	3967	-28.05	5.81	-0.04
355	SLE RA 16	157	36	3947	-27.83	5.79	-0.04
355	SLE RA 17	156	36	3948	-27.84	5.78	-0.04
355	SLE RA 18	155	37	4010	-28.08	5.7	-0.04
355	SLE RA 19	154	37	4011	-28.1	5.69	-0.04
355	SLE RA 20	158	37	4046	-28.45	5.84	-0.04
355	SLE RA 21	158	37	4047	-28.46	5.83	-0.04
355	SLE FR 1	136	32	3558	-24.79	5.05	-0.03
355	SLE FR 2	136	32	3558	-24.79	5.04	-0.03
355	SLE FR 3	138	33	3572	-24.94	5.1	-0.03
355	SLE FR 4	142	34	3694	-25.78	5.24	-0.04
355	SLE FR 5	143	34	3708	-25.92	5.3	-0.04
355	SLE FR 6	146	34	3784	-26.44	5.37	-0.04
355	SLE QP 1	136	32	3558	-24.79	5.05	-0.03
355	SLE QP 2	142	34	3693	-25.78	5.24	-0.04
355	SLD 1	1502	27	3576	-19.32	63.12	-0.03
355	SLD 2	1502	27	3576	-19.32	63.12	-0.03
355	SLD 3	1572	46	4050	-38.26	66.06	-0.05
355	SLD 4	1572	46	4050	-38.26	66.06	-0.05
355	SLD 5	444	4	2939	4.87	18.15	0
355	SLD 6	444	4	2939	4.87	18.15	0
355	SLD 7	677	65	4519	-58.24	27.95	-0.07
355	SLD 8	677	65	4519	-58.24	27.95	-0.07
355	SLD 9	-393	2	2867	6.68	-17.46	0
355	SLD 10	-393	2	2867	6.68	-17.46	0
355	SLD 11	-160	64	4448	-56.43	-7.67	-0.07
355	SLD 12	-160	64	4448	-56.43	-7.67	-0.07
355	SLD 13	-1288	21	3336	-13.3	-55.58	-0.02
355	SLD 14	-1288	21	3336	-13.3	-55.58	-0.02
355	SLD 15	-1218	40	3811	-32.23	-52.64	-0.04
355	SLD 16	-1218	40	3811	-32.23	-52.64	-0.04
355	SLV 1	3233	19	3406	-10.83	136.76	-0.02
355	SLV 2	3233	19	3406	-10.83	136.76	-0.02
355	SLV 3	3399	63	4527	-55.55	143.76	-0.07
355	SLV 4	3399	63	4527	-55.55	143.76	-0.07
355	SLV 5	817	-37	1906	46.54	34.08	0.04
355	SLV 6	817	-37	1906	46.54	34.08	0.04
355	SLV 7	1371	109	5644	-102.55	57.41	-0.12
355	SLV 8	1371	109	5644	-102.55	57.41	-0.12
355	SLV 9	-1087	-42	1742	50.99	-46.93	0.05
355	SLV 10	-1087	-42	1742	50.99	-46.93	0.05
355	SLV 11	-533	104	5480	-98.1	-23.6	-0.11
355	SLV 12	-533	104	5480	-98.1	-23.6	-0.11
355	SLV 13	-3115	4	2859	4	-133.28	0
355	SLV 14	-3115	4	2859	4	-133.28	0
355	SLV 15	-2949	48	3980	-40.73	-126.28	-0.05
355	SLV 16	-2949	48	3980	-40.73	-126.28	-0.05
356	SLU 1	257	33	3618	-23.54	9.85	-0.05
356	SLU 2	257	33	3622	-23.57	9.84	-0.05
356	SLU 3	267	34	3709	-24.39	10.26	-0.05
356	SLU 4	267	34	3711	-24.41	10.26	-0.05
356	SLU 5	265	34	3682	-24.12	10.15	-0.05
356	SLU 6	275	35	3768	-24.94	10.57	-0.05
356	SLU 7	275	35	3770	-24.95	10.57	-0.05
356	SLU 8	273	34	3737	-24.63	10.47	-0.05
356	SLU 9	273	34	3739	-24.65	10.47	-0.05
356	SLU 10	296	38	4126	-27.01	11.34	-0.06
356	SLU 11	307	39	4213	-27.83	11.76	-0.06
356	SLU 12	307	39	4215	-27.85	11.76	-0.06
356	SLU 13	304	38	4186	-27.56	11.65	-0.06
356	SLU 14	315	40	4272	-28.38	12.07	-0.06
356	SLU 15	314	40	4274	-28.4	12.07	-0.06
356	SLU 16	312	39	4241	-28.07	11.97	-0.06
356	SLU 17	312	39	4243	-28.09	11.97	-0.06
356	SLU 18	313	40	4338	-28.46	11.99	-0.06
356	SLU 19	313	40	4341	-28.48	11.99	-0.06
356	SLU 20	321	40	4398	-29	12.3	-0.06

Nodo	Cont.	Reazione a traslazione			Reazione a rotazione		
Ind.	N.br.	x	y	z	x	y	z
356	SLU 21	321	40	4400	-29.02	12.3	-0.06
356	SLU 22	295	38	4077	-26.95	11.31	-0.06
356	SLU 23	295	38	4081	-26.97	11.31	-0.06
356	SLU 24	306	39	4167	-27.79	11.73	-0.06
356	SLU 25	306	39	4170	-27.81	11.72	-0.06
356	SLU 26	303	38	4140	-27.52	11.62	-0.06
356	SLU 27	314	40	4227	-28.34	12.04	-0.06
356	SLU 28	314	40	4229	-28.36	12.04	-0.06
356	SLU 29	311	39	4196	-28.04	11.94	-0.06
356	SLU 30	311	39	4198	-28.05	11.93	-0.06
356	SLU 31	334	42	4585	-30.42	12.81	-0.06
356	SLU 32	345	43	4671	-31.24	13.23	-0.07
356	SLU 33	345	44	4674	-31.25	13.23	-0.07
356	SLU 34	342	43	4644	-30.96	13.12	-0.07
356	SLU 35	353	44	4731	-31.78	13.54	-0.07
356	SLU 36	353	44	4733	-31.8	13.54	-0.07
356	SLU 37	350	44	4700	-31.48	13.44	-0.07
356	SLU 38	350	44	4702	-31.49	13.43	-0.07
356	SLU 39	351	44	4797	-31.86	13.46	-0.07
356	SLU 40	351	44	4799	-31.88	13.45	-0.07
356	SLU 41	359	45	4857	-32.41	13.77	-0.07
356	SLU 42	359	45	4859	-32.43	13.77	-0.07
356	SLU 43	321	41	4547	-29.44	12.3	-0.06
356	SLU 44	321	41	4550	-29.47	12.29	-0.06
356	SLU 45	331	42	4637	-30.29	12.71	-0.06
356	SLU 46	331	42	4639	-30.3	12.71	-0.06
356	SLU 47	329	42	4610	-30.01	12.61	-0.06
356	SLU 48	339	43	4696	-30.83	13.02	-0.07
356	SLU 49	339	43	4698	-30.85	13.02	-0.07
356	SLU 50	337	43	4665	-30.53	12.92	-0.06
356	SLU 51	337	43	4668	-30.55	12.92	-0.06
356	SLU 52	360	46	5054	-32.91	13.79	-0.07
356	SLU 53	371	47	5141	-33.73	14.21	-0.07
356	SLU 54	371	47	5143	-33.75	14.21	-0.07
356	SLU 55	368	47	5114	-33.45	14.11	-0.07
356	SLU 56	378	48	5200	-34.27	14.52	-0.07
356	SLU 57	378	48	5202	-34.29	14.52	-0.07
356	SLU 58	376	47	5169	-33.97	14.42	-0.07
356	SLU 59	376	47	5172	-33.99	14.42	-0.07
356	SLU 60	377	48	5267	-34.36	14.44	-0.07
356	SLU 61	377	48	5269	-34.37	14.44	-0.07
356	SLU 62	385	49	5326	-34.9	14.75	-0.07
356	SLU 63	385	49	5328	-34.92	14.75	-0.07
356	SLU 64	359	46	5006	-32.84	13.76	-0.07
356	SLU 65	359	46	5009	-32.87	13.76	-0.07
356	SLU 66	370	47	5096	-33.69	14.18	-0.07
356	SLU 67	370	47	5098	-33.71	14.18	-0.07
356	SLU 68	367	47	5069	-33.42	14.07	-0.07
356	SLU 69	378	48	5155	-34.24	14.49	-0.07
356	SLU 70	377	48	5157	-34.25	14.49	-0.07
356	SLU 71	375	47	5124	-33.93	14.39	-0.07
356	SLU 72	375	47	5126	-33.95	14.39	-0.07
356	SLU 73	398	51	5513	-36.31	15.26	-0.08
356	SLU 74	409	52	5600	-37.13	15.68	-0.08
356	SLU 75	409	52	5602	-37.15	15.68	-0.08
356	SLU 76	406	51	5573	-36.86	15.57	-0.08
356	SLU 77	417	53	5659	-37.68	15.99	-0.08
356	SLU 78	417	53	5661	-37.69	15.99	-0.08
356	SLU 79	414	52	5628	-37.37	15.89	-0.08
356	SLU 80	414	52	5630	-37.39	15.89	-0.08
356	SLU 81	415	53	5725	-37.76	15.91	-0.08
356	SLU 82	415	53	5728	-37.78	15.9	-0.08
356	SLU 83	423	53	5785	-38.3	16.22	-0.08
356	SLU 84	423	53	5787	-38.32	16.22	-0.08
356	SLE RA 1	268	34	3750	-24.52	10.27	-0.05
356	SLE RA 2	268	34	3752	-24.53	10.26	-0.05
356	SLE RA 3	275	35	3810	-25.08	10.54	-0.05
356	SLE RA 4	275	35	3811	-25.09	10.54	-0.05
356	SLE RA 5	273	35	3792	-24.9	10.47	-0.05
356	SLE RA 6	280	36	3849	-25.44	10.75	-0.05
356	SLE RA 7	280	36	3851	-25.46	10.75	-0.05
356	SLE RA 8	278	35	3829	-25.24	10.68	-0.05
356	SLE RA 9	278	35	3830	-25.25	10.68	-0.05
356	SLE RA 10	294	37	4088	-26.83	11.26	-0.06
356	SLE RA 11	301	38	4146	-27.38	11.54	-0.06
356	SLE RA 12	301	38	4147	-27.39	11.54	-0.06
356	SLE RA 13	299	38	4128	-27.19	11.47	-0.06
356	SLE RA 14	306	39	4185	-27.74	11.75	-0.06
356	SLE RA 15	306	39	4187	-27.75	11.75	-0.06
356	SLE RA 16	304	38	4165	-27.54	11.68	-0.06
356	SLE RA 17	304	38	4166	-27.55	11.68	-0.06
356	SLE RA 18	305	39	4230	-27.79	11.69	-0.06
356	SLE RA 19	305	39	4231	-27.8	11.69	-0.06
356	SLE RA 20	310	39	4269	-28.16	11.9	-0.06
356	SLE RA 21	310	39	4271	-28.17	11.9	-0.06
356	SLE FR 1	268	34	3750	-24.52	10.27	-0.05
356	SLE FR 2	268	34	3750	-24.52	10.26	-0.05
356	SLE FR 3	270	34	3765	-24.66	10.35	-0.05
356	SLE FR 4	279	36	3894	-25.5	10.69	-0.05
356	SLE FR 5	281	36	3909	-25.64	10.78	-0.05
356	SLE FR 6	286	36	3990	-26.15	10.98	-0.06

Nodo	Cont.	Reazione a traslazione			Reazione a rotazione		
Ind.	N.br.	x	y	z	x	y	z
356	SLE QP 1	268	34	3750	-24.52	10.27	-0.05
356	SLE QP 2	279	36	3894	-25.5	10.69	-0.05
356	SLD 1	1575	32	3885	-20.8	65.77	-0.03
356	SLD 2	1575	32	3885	-20.8	65.77	-0.03
356	SLD 3	1666	48	4380	-37.54	69.44	-0.06
356	SLD 4	1666	48	4380	-37.54	69.44	-0.06
356	SLD 5	530	11	3141	1.31	21.66	0
356	SLD 6	530	11	3141	1.31	21.66	0
356	SLD 7	832	63	4790	-54.51	33.88	-0.1
356	SLD 8	832	63	4790	-54.51	33.88	-0.1
356	SLD 9	-274	9	2998	3.51	-12.49	0
356	SLD 10	-274	9	2998	3.51	-12.49	0
356	SLD 11	27	60	4646	-52.31	-0.27	-0.11
356	SLD 12	27	60	4646	-52.31	-0.27	-0.11
356	SLD 13	-1108	23	3407	-13.46	-48.05	-0.04
356	SLD 14	-1108	23	3407	-13.46	-48.05	-0.04
356	SLD 15	-1017	39	3902	-30.2	-44.38	-0.08
356	SLD 16	-1017	39	3902	-30.2	-44.38	-0.08
356	SLV 1	3223	28	3854	-14.54	135.81	0
356	SLV 2	3223	28	3854	-14.54	135.81	0
356	SLV 3	3438	64	5024	-54.14	144.53	-0.08
356	SLV 4	3438	64	5024	-54.14	144.53	-0.08
356	SLV 5	835	-22	2107	37.85	34.99	0.07
356	SLV 6	835	-22	2107	37.85	34.99	0.07
356	SLV 7	1554	100	6007	-94.15	64.08	-0.17
356	SLV 8	1554	100	6007	-94.15	64.08	-0.17
356	SLV 9	-996	-28	1780	43.15	-42.69	0.06
356	SLV 10	-996	-28	1780	43.15	-42.69	0.06
356	SLV 11	-277	93	5680	-88.84	-13.61	-0.18
356	SLV 12	-277	93	5680	-88.84	-13.61	-0.18
356	SLV 13	-2881	7	2763	3.14	-123.14	-0.03
356	SLV 14	-2881	7	2763	3.14	-123.14	-0.03
356	SLV 15	-2665	43	3933	-36.46	-114.42	-0.1
356	SLV 16	-2665	43	3933	-36.46	-114.42	-0.1
357	SLU 1	306	33	3917	-21.84	11.35	-0.06
357	SLU 2	306	33	3921	-21.87	11.35	-0.06
357	SLU 3	318	34	4018	-22.63	11.79	-0.07
357	SLU 4	318	34	4020	-22.64	11.8	-0.07
357	SLU 5	315	34	3988	-22.37	11.68	-0.06
357	SLU 6	326	35	4084	-23.13	12.12	-0.07
357	SLU 7	327	35	4087	-23.15	12.13	-0.07
357	SLU 8	323	34	4050	-22.85	12	-0.07
357	SLU 9	323	34	4052	-22.87	12	-0.07
357	SLU 10	353	38	4473	-25.1	13.07	-0.07
357	SLU 11	365	39	4569	-25.86	13.51	-0.07
357	SLU 12	365	39	4572	-25.87	13.51	-0.07
357	SLU 13	361	38	4539	-25.6	13.39	-0.07
357	SLU 14	373	40	4635	-26.36	13.84	-0.08
357	SLU 15	373	40	4638	-26.38	13.84	-0.08
357	SLU 16	370	39	4601	-26.08	13.72	-0.08
357	SLU 17	370	39	4604	-26.09	13.72	-0.08
357	SLU 18	373	40	4705	-26.46	13.8	-0.08
357	SLU 19	373	40	4707	-26.47	13.8	-0.08
357	SLU 20	381	40	4771	-26.96	14.13	-0.08
357	SLU 21	381	40	4774	-26.97	14.13	-0.08
357	SLU 22	351	38	4421	-25.03	13.02	-0.07
357	SLU 23	351	38	4425	-25.05	13.02	-0.07
357	SLU 24	363	39	4521	-25.81	13.47	-0.07
357	SLU 25	363	39	4524	-25.83	13.47	-0.07
357	SLU 26	360	38	4491	-25.56	13.35	-0.07
357	SLU 27	372	40	4588	-26.32	13.8	-0.08
357	SLU 28	372	40	4590	-26.33	13.8	-0.08
357	SLU 29	368	39	4553	-26.03	13.67	-0.08
357	SLU 30	369	39	4556	-26.05	13.68	-0.08
357	SLU 31	398	42	4976	-28.28	14.74	-0.08
357	SLU 32	410	44	5073	-29.04	15.19	-0.08
357	SLU 33	410	44	5075	-29.06	15.19	-0.08
357	SLU 34	407	43	5043	-28.79	15.07	-0.08
357	SLU 35	419	44	5139	-29.54	15.51	-0.09
357	SLU 36	419	44	5142	-29.56	15.52	-0.09
357	SLU 37	415	44	5105	-29.26	15.39	-0.08
357	SLU 38	415	44	5107	-29.28	15.39	-0.08
357	SLU 39	418	44	5208	-29.64	15.47	-0.09
357	SLU 40	418	44	5211	-29.66	15.48	-0.09
357	SLU 41	427	45	5275	-30.14	15.8	-0.09
357	SLU 42	427	45	5277	-30.16	15.8	-0.09
357	SLU 43	382	41	4919	-27.31	14.18	-0.08
357	SLU 44	382	41	4924	-27.33	14.18	-0.08
357	SLU 45	394	42	5020	-28.09	14.62	-0.08
357	SLU 46	394	42	5023	-28.11	14.63	-0.08
357	SLU 47	391	42	4990	-27.83	14.51	-0.08
357	SLU 48	403	43	5086	-28.59	14.95	-0.08
357	SLU 49	403	43	5089	-28.61	14.95	-0.08
357	SLU 50	399	43	5052	-28.31	14.83	-0.08
357	SLU 51	399	43	5055	-28.33	14.83	-0.08
357	SLU 52	429	46	5475	-30.56	15.9	-0.09
357	SLU 53	441	47	5571	-31.32	16.34	-0.09
357	SLU 54	441	47	5574	-31.33	16.34	-0.09
357	SLU 55	438	47	5541	-31.06	16.22	-0.09
357	SLU 56	449	48	5638	-31.82	16.67	-0.09
357	SLU 57	449	48	5640	-31.84	16.67	-0.09

Nodo	Cont.	Reazione a traslazione			Reazione a rotazione		
Ind.	N.br.	x	y	z	x	y	z
357	SLU 58	446	47	5603	-31.54	16.55	-0.09
357	SLU 59	446	47	5606	-31.56	16.55	-0.09
357	SLU 60	449	48	5707	-31.92	16.63	-0.09
357	SLU 61	449	48	5710	-31.93	16.63	-0.09
357	SLU 62	457	49	5773	-32.42	16.96	-0.09
357	SLU 63	458	49	5776	-32.44	16.96	-0.09
357	SLU 64	428	46	5423	-30.49	15.85	-0.09
357	SLU 65	428	46	5427	-30.52	15.85	-0.09
357	SLU 66	439	47	5524	-31.27	16.3	-0.09
357	SLU 67	440	47	5526	-31.29	16.3	-0.09
357	SLU 68	436	47	5494	-31.02	16.18	-0.09
357	SLU 69	448	48	5590	-31.78	16.63	-0.09
357	SLU 70	448	48	5593	-31.79	16.63	-0.09
357	SLU 71	445	47	5556	-31.5	16.5	-0.09
357	SLU 72	445	47	5558	-31.51	16.51	-0.09
357	SLU 73	474	51	5979	-33.74	17.57	-0.1
357	SLU 74	486	52	6075	-34.5	18.02	-0.1
357	SLU 75	486	52	6078	-34.52	18.02	-0.1
357	SLU 76	483	51	6045	-34.25	17.9	-0.1
357	SLU 77	495	53	6141	-35.01	18.34	-0.1
357	SLU 78	495	53	6144	-35.02	18.35	-0.1
357	SLU 79	491	52	6107	-34.72	18.22	-0.1
357	SLU 80	492	52	6110	-34.74	18.22	-0.1
357	SLU 81	494	53	6211	-35.1	18.3	-0.1
357	SLU 82	494	53	6213	-35.12	18.31	-0.1
357	SLU 83	503	53	6277	-35.6	18.63	-0.1
357	SLU 84	503	53	6280	-35.62	18.63	-0.1
357	SLE RA 1	319	34	4061	-22.75	11.82	-0.07
357	SLE RA 2	319	34	4064	-22.77	11.83	-0.07
357	SLE RA 3	327	35	4128	-23.28	12.12	-0.07
357	SLE RA 4	327	35	4130	-23.29	12.13	-0.07
357	SLE RA 5	325	35	4108	-23.11	12.05	-0.07
357	SLE RA 6	333	35	4172	-23.61	12.34	-0.07
357	SLE RA 7	333	35	4174	-23.62	12.34	-0.07
357	SLE RA 8	330	35	4149	-23.42	12.26	-0.07
357	SLE RA 9	330	35	4151	-23.44	12.26	-0.07
357	SLE RA 10	350	37	4431	-24.92	12.97	-0.07
357	SLE RA 11	358	38	4495	-25.43	13.27	-0.07
357	SLE RA 12	358	38	4497	-25.44	13.27	-0.07
357	SLE RA 13	356	38	4476	-25.26	13.19	-0.07
357	SLE RA 14	364	39	4540	-25.76	13.49	-0.07
357	SLE RA 15	364	39	4541	-25.78	13.49	-0.07
357	SLE RA 16	361	38	4517	-25.58	13.41	-0.07
357	SLE RA 17	362	38	4519	-25.59	13.41	-0.07
357	SLE RA 18	363	39	4586	-25.83	13.46	-0.07
357	SLE RA 19	363	39	4588	-25.84	13.46	-0.07
357	SLE RA 20	369	39	4630	-26.16	13.68	-0.08
357	SLE RA 21	369	39	4632	-26.17	13.68	-0.08
357	SLE FR 1	319	34	4061	-22.75	11.82	-0.07
357	SLE FR 2	319	34	4061	-22.76	11.82	-0.07
357	SLE FR 3	321	34	4079	-22.89	11.91	-0.07
357	SLE FR 4	332	36	4219	-23.68	12.32	-0.07
357	SLE FR 5	335	36	4236	-23.81	12.4	-0.07
357	SLE FR 6	341	36	4323	-24.29	12.64	-0.07
357	SLE QP 1	319	34	4061	-22.75	11.82	-0.07
357	SLE QP 2	332	36	4218	-23.68	12.31	-0.07
357	SLD 1	1559	36	4231	-21.53	65.08	-0.05
357	SLD 2	1559	36	4231	-21.53	65.08	-0.05
357	SLD 3	1663	46	4761	-34.28	69.25	-0.08
357	SLD 4	1663	46	4761	-34.28	69.25	-0.08
357	SLD 5	541	21	3419	-3.7	21.81	-0.01
357	SLD 6	541	21	3419	-3.7	21.81	-0.01
357	SLD 7	890	54	5185	-46.19	35.73	-0.12
357	SLD 8	890	54	5185	-46.19	35.73	-0.12
357	SLD 9	-226	17	3252	-1.16	-11.1	-0.02
357	SLD 10	-226	17	3252	-1.16	-11.1	-0.02
357	SLD 11	123	50	5018	-43.65	2.82	-0.12
357	SLD 12	123	50	5018	-43.65	2.82	-0.12
357	SLD 13	-999	25	3676	-13.07	-44.62	-0.06
357	SLD 14	-999	25	3676	-13.07	-44.62	-0.06
357	SLD 15	-894	35	4206	-25.82	-40.45	-0.09
357	SLD 16	-894	35	4206	-25.82	-40.45	-0.09
357	SLV 1	3117	37	4226	-18.6	132.13	-0.01
357	SLV 2	3117	37	4226	-18.6	132.13	-0.01
357	SLV 3	3367	61	5480	-48.82	142.09	-0.09
357	SLV 4	3367	61	5480	-48.82	142.09	-0.09
357	SLV 5	789	0	2318	23.68	33.15	0.06
357	SLV 6	789	0	2318	23.68	33.15	0.06
357	SLV 7	1621	79	6500	-77.05	66.36	-0.19
357	SLV 8	1621	79	6500	-77.05	66.36	-0.19
357	SLV 9	-957	-8	1937	29.7	-41.73	0.05
357	SLV 10	-957	-8	1937	29.7	-41.73	0.05
357	SLV 11	-124	71	6119	-71.03	-8.52	-0.2
357	SLV 12	-124	71	6119	-71.03	-8.52	-0.2
357	SLV 13	-2702	10	2957	1.47	-117.46	-0.05
357	SLV 14	-2702	10	2957	1.47	-117.46	-0.05
357	SLV 15	-2452	34	4211	-28.75	-107.5	-0.12
357	SLV 16	-2452	34	4211	-28.75	-107.5	-0.12
358	SLU 1	270	26	4250	-17.48	9.74	-0.06
358	SLU 2	270	27	4256	-17.5	9.75	-0.06
358	SLU 3	280	27	4363	-18.11	10.12	-0.06

Nodo	Cont.	Reazione a traslazione			Reazione a rotazione		
Ind.	N.br.	x	y	z	x	y	z
358	SLU 4	280	27	4366	-18.12	10.12	-0.06
358	SLU 5	277	27	4330	-17.9	10.02	-0.06
358	SLU 6	287	28	4437	-18.5	10.39	-0.06
358	SLU 7	287	28	4440	-18.51	10.39	-0.06
358	SLU 8	284	28	4398	-18.28	10.28	-0.06
358	SLU 9	285	28	4402	-18.29	10.29	-0.06
358	SLU 10	312	30	4860	-20.13	11.25	-0.06
358	SLU 11	322	31	4967	-20.73	11.62	-0.07
358	SLU 12	322	31	4970	-20.74	11.63	-0.07
358	SLU 13	319	31	4934	-20.52	11.53	-0.07
358	SLU 14	329	32	5041	-21.13	11.89	-0.07
358	SLU 15	329	32	5044	-21.14	11.9	-0.07
358	SLU 16	326	32	5002	-20.9	11.79	-0.07
358	SLU 17	326	32	5006	-20.91	11.79	-0.07
358	SLU 18	329	32	5113	-21.23	11.89	-0.07
358	SLU 19	329	32	5116	-21.25	11.89	-0.07
358	SLU 20	336	33	5187	-21.63	12.16	-0.07
358	SLU 21	337	33	5190	-21.64	12.17	-0.07
358	SLU 22	310	30	4804	-20.07	11.2	-0.06
358	SLU 23	310	30	4809	-20.08	11.21	-0.06
358	SLU 24	320	31	4916	-20.69	11.58	-0.07
358	SLU 25	321	31	4920	-20.7	11.59	-0.07
358	SLU 26	318	31	4883	-20.48	11.49	-0.07
358	SLU 27	328	32	4990	-21.09	11.85	-0.07
358	SLU 28	328	32	4994	-21.1	11.86	-0.07
358	SLU 29	325	32	4952	-20.86	11.75	-0.07
358	SLU 30	325	32	4955	-20.87	11.75	-0.07
358	SLU 31	352	34	5413	-22.71	12.72	-0.07
358	SLU 32	362	35	5520	-23.32	13.08	-0.08
358	SLU 33	362	35	5524	-23.33	13.09	-0.08
358	SLU 34	359	35	5487	-23.11	12.99	-0.07
358	SLU 35	369	36	5594	-23.71	13.36	-0.08
358	SLU 36	369	36	5598	-23.72	13.36	-0.08
358	SLU 37	366	36	5556	-23.49	13.25	-0.08
358	SLU 38	366	36	5559	-23.5	13.26	-0.08
358	SLU 39	369	36	5667	-23.82	13.35	-0.08
358	SLU 40	370	36	5670	-23.83	13.36	-0.08
358	SLU 41	377	37	5741	-24.21	13.62	-0.08
358	SLU 42	377	37	5744	-24.23	13.63	-0.08
358	SLU 43	337	33	5336	-21.84	12.16	-0.07
358	SLU 44	337	33	5341	-21.86	12.17	-0.07
358	SLU 45	347	34	5448	-22.47	12.54	-0.07
358	SLU 46	347	34	5451	-22.48	12.54	-0.07
358	SLU 47	344	34	5415	-22.26	12.44	-0.07
358	SLU 48	354	35	5522	-22.86	12.81	-0.07
358	SLU 49	355	35	5525	-22.87	12.81	-0.07
358	SLU 50	351	34	5484	-22.64	12.7	-0.07
358	SLU 51	352	34	5487	-22.65	12.71	-0.07
358	SLU 52	379	37	5945	-24.49	13.67	-0.08
358	SLU 53	389	38	6052	-25.09	14.04	-0.08
358	SLU 54	389	38	6055	-25.1	14.05	-0.08
358	SLU 55	386	38	6019	-24.88	13.95	-0.08
358	SLU 56	396	39	6126	-25.49	14.31	-0.08
358	SLU 57	396	39	6129	-25.5	14.32	-0.08
358	SLU 58	393	38	6088	-25.26	14.21	-0.08
358	SLU 59	393	38	6091	-25.27	14.21	-0.08
358	SLU 60	396	39	6199	-25.59	14.31	-0.08
358	SLU 61	396	39	6202	-25.6	14.31	-0.08
358	SLU 62	403	39	6273	-25.99	14.58	-0.08
358	SLU 63	404	39	6276	-26	14.59	-0.08
358	SLU 64	377	37	5890	-24.43	13.62	-0.08
358	SLU 65	377	37	5895	-24.44	13.63	-0.08
358	SLU 66	387	38	6002	-25.05	14	-0.08
358	SLU 67	388	38	6005	-25.06	14.01	-0.08
358	SLU 68	385	38	5969	-24.84	13.91	-0.08
358	SLU 69	395	39	6076	-25.45	14.27	-0.08
358	SLU 70	395	39	6079	-25.46	14.28	-0.08
358	SLU 71	392	38	6037	-25.22	14.17	-0.08
358	SLU 72	392	38	6041	-25.23	14.17	-0.08
358	SLU 73	419	41	6499	-27.07	15.14	-0.09
358	SLU 74	429	42	6606	-27.67	15.5	-0.09
358	SLU 75	429	42	6609	-27.69	15.51	-0.09
358	SLU 76	426	42	6573	-27.47	15.41	-0.09
358	SLU 77	436	43	6680	-28.07	15.78	-0.09
358	SLU 78	436	43	6683	-28.08	15.78	-0.09
358	SLU 79	433	42	6641	-27.85	15.67	-0.09
358	SLU 80	434	42	6645	-27.86	15.68	-0.09
358	SLU 81	436	43	6752	-28.18	15.77	-0.09
358	SLU 82	437	43	6755	-28.19	15.78	-0.09
358	SLU 83	444	43	6826	-28.57	16.04	-0.09
358	SLU 84	444	43	6829	-28.58	16.05	-0.09
358	SLE RA 1	281	28	4409	-18.22	10.16	-0.06
358	SLE RA 2	281	28	4412	-18.23	10.17	-0.06
358	SLE RA 3	288	28	4483	-18.64	10.41	-0.06
358	SLE RA 4	288	28	4486	-18.64	10.41	-0.06
358	SLE RA 5	286	28	4461	-18.5	10.35	-0.06
358	SLE RA 6	293	29	4533	-18.9	10.59	-0.06
358	SLE RA 7	293	29	4535	-18.91	10.59	-0.06
358	SLE RA 8	291	28	4507	-18.75	10.52	-0.06
358	SLE RA 9	291	28	4509	-18.76	10.52	-0.06
358	SLE RA 10	309	30	4815	-19.98	11.17	-0.06

Nodo	Cont.	Reazione a traslazione			Reazione a rotazione		
Ind.	N.br.	x	y	z	x	y	z
358	SLE RA 11	316	31	4886	-20.39	11.41	-0.07
358	SLE RA 12	316	31	4888	-20.39	11.42	-0.07
358	SLE RA 13	314	31	4864	-20.25	11.35	-0.07
358	SLE RA 14	321	31	4935	-20.65	11.59	-0.07
358	SLE RA 15	321	31	4938	-20.66	11.6	-0.07
358	SLE RA 16	319	31	4910	-20.5	11.52	-0.07
358	SLE RA 17	319	31	4912	-20.51	11.53	-0.07
358	SLE RA 18	321	31	4984	-20.72	11.59	-0.07
358	SLE RA 19	321	31	4986	-20.73	11.59	-0.07
358	SLE RA 20	326	32	5033	-20.99	11.77	-0.07
358	SLE RA 21	326	32	5035	-20.99	11.78	-0.07
358	SLE FR 1	281	28	4409	-18.22	10.16	-0.06
358	SLE FR 2	281	28	4409	-18.22	10.16	-0.06
358	SLE FR 3	283	28	4428	-18.33	10.23	-0.06
358	SLE FR 4	293	29	4582	-18.97	10.59	-0.06
358	SLE FR 5	295	29	4601	-19.08	10.66	-0.06
358	SLE FR 6	301	29	4696	-19.47	10.87	-0.06
358	SLE QP 1	281	28	4409	-18.22	10.16	-0.06
358	SLE QP 2	293	29	4581	-18.97	10.59	-0.06
358	SLD 1	1462	33	4529	-19.3	60.68	-0.04
358	SLD 2	1462	33	4529	-19.3	60.68	-0.04
358	SLD 3	1569	37	5108	-27.17	64.9	-0.06
358	SLD 4	1569	37	5108	-27.17	64.9	-0.06
358	SLD 5	481	23	3687	-7.14	19.22	-0.02
358	SLD 6	481	23	3687	-7.14	19.22	-0.02
358	SLD 7	838	38	5618	-33.36	33.28	-0.1
358	SLD 8	838	38	5618	-33.36	33.28	-0.1
358	SLD 9	-252	19	3545	-4.58	-12.1	-0.03
358	SLD 10	-252	19	3545	-4.58	-12.1	-0.03
358	SLD 11	105	34	5475	-30.8	1.96	-0.1
358	SLD 12	105	34	5475	-30.8	1.96	-0.1
358	SLD 13	-983	20	4054	-10.77	-43.72	-0.06
358	SLD 14	-983	20	4054	-10.77	-43.72	-0.06
358	SLD 15	-876	25	4633	-18.64	-39.5	-0.08
358	SLD 16	-876	25	4633	-18.64	-39.5	-0.08
358	SLV 1	2947	38	4440	-19.61	124.33	-0.01
358	SLV 2	2947	38	4440	-19.61	124.33	-0.01
358	SLV 3	3203	49	5813	-38.39	134.41	-0.06
358	SLV 4	3203	49	5813	-38.39	134.41	-0.06
358	SLV 5	701	14	2457	9.32	29.43	0.03
358	SLV 6	701	14	2457	9.32	29.43	0.03
358	SLV 7	1554	52	7033	-53.27	63.02	-0.14
358	SLV 8	1554	52	7033	-53.27	63.02	-0.14
358	SLV 9	-968	5	2129	15.33	-41.84	0.02
358	SLV 10	-968	5	2129	15.33	-41.84	0.02
358	SLV 11	-115	43	6706	-47.26	-8.25	-0.16
358	SLV 12	-115	43	6706	-47.26	-8.25	-0.16
358	SLV 13	-2617	8	3349	0.45	-113.23	-0.06
358	SLV 14	-2617	8	3349	0.45	-113.23	-0.06
358	SLV 15	-2361	20	4722	-18.33	-103.15	-0.11
358	SLV 16	-2361	20	4722	-18.33	-103.15	-0.11
359	SLU 1	161	12	4556	-10.37	5.51	-0.03
359	SLU 2	162	12	4562	-10.38	5.52	-0.03
359	SLU 3	167	12	4679	-10.74	5.72	-0.03
359	SLU 4	168	12	4683	-10.74	5.72	-0.03
359	SLU 5	166	12	4643	-10.61	5.67	-0.03
359	SLU 6	172	12	4760	-10.97	5.87	-0.04
359	SLU 7	172	12	4763	-10.97	5.88	-0.04
359	SLU 8	170	12	4718	-10.83	5.82	-0.04
359	SLU 9	170	12	4722	-10.84	5.82	-0.04
359	SLU 10	187	14	5215	-11.99	6.38	-0.04
359	SLU 11	193	14	5331	-12.35	6.58	-0.04
359	SLU 12	193	14	5335	-12.35	6.59	-0.04
359	SLU 13	192	14	5296	-12.22	6.53	-0.04
359	SLU 14	197	14	5412	-12.58	6.74	-0.04
359	SLU 15	197	14	5416	-12.58	6.74	-0.04
359	SLU 16	196	14	5370	-12.44	6.68	-0.04
359	SLU 17	196	14	5374	-12.45	6.69	-0.04
359	SLU 18	198	15	5488	-12.67	6.74	-0.04
359	SLU 19	198	15	5492	-12.67	6.74	-0.04
359	SLU 20	202	15	5569	-12.9	6.89	-0.04
359	SLU 21	202	15	5573	-12.9	6.9	-0.04
359	SLU 22	186	14	5157	-11.95	6.35	-0.04
359	SLU 23	187	14	5163	-11.96	6.36	-0.04
359	SLU 24	192	14	5279	-12.32	6.57	-0.04
359	SLU 25	193	14	5283	-12.32	6.57	-0.04
359	SLU 26	191	14	5243	-12.19	6.52	-0.04
359	SLU 27	197	14	5360	-12.55	6.72	-0.04
359	SLU 28	197	14	5364	-12.55	6.73	-0.04
359	SLU 29	195	14	5318	-12.41	6.67	-0.04
359	SLU 30	195	14	5322	-12.41	6.67	-0.04
359	SLU 31	212	16	5815	-13.56	7.23	-0.04
359	SLU 32	218	16	5932	-13.92	7.43	-0.04
359	SLU 33	218	16	5935	-13.93	7.43	-0.04
359	SLU 34	216	16	5896	-13.79	7.38	-0.04
359	SLU 35	222	16	6012	-14.15	7.58	-0.05
359	SLU 36	222	16	6016	-14.16	7.59	-0.05
359	SLU 37	221	16	5970	-14.02	7.53	-0.05
359	SLU 38	221	16	5974	-14.02	7.53	-0.05
359	SLU 39	223	16	6088	-14.24	7.59	-0.05
359	SLU 40	223	16	6092	-14.25	7.59	-0.05

Nodo	Cont.	Reazione a traslazione			Reazione a rotazione		
Ind.	N.br.	x	y	z	x	y	z
359	SLU 41	227	17	6169	-14.47	7.74	-0.05
359	SLU 42	227	17	6173	-14.48	7.75	-0.05
359	SLU 43	201	15	5717	-12.95	6.87	-0.04
359	SLU 44	202	15	5723	-12.95	6.88	-0.04
359	SLU 45	207	15	5840	-13.31	7.08	-0.04
359	SLU 46	207	15	5844	-13.32	7.08	-0.04
359	SLU 47	206	15	5804	-13.18	7.03	-0.04
359	SLU 48	212	15	5921	-13.54	7.24	-0.04
359	SLU 49	212	15	5925	-13.55	7.24	-0.04
359	SLU 50	210	15	5879	-13.41	7.18	-0.04
359	SLU 51	210	15	5883	-13.41	7.19	-0.04
359	SLU 52	227	17	6376	-14.56	7.74	-0.05
359	SLU 53	233	17	6493	-14.92	7.94	-0.05
359	SLU 54	233	17	6496	-14.92	7.95	-0.05
359	SLU 55	231	17	6457	-14.79	7.9	-0.05
359	SLU 56	237	17	6573	-15.15	8.1	-0.05
359	SLU 57	237	17	6577	-15.15	8.1	-0.05
359	SLU 58	235	17	6531	-15.01	8.04	-0.05
359	SLU 59	236	17	6535	-15.02	8.05	-0.05
359	SLU 60	238	17	6649	-15.24	8.1	-0.05
359	SLU 61	238	17	6653	-15.25	8.1	-0.05
359	SLU 62	242	18	6730	-15.47	8.26	-0.05
359	SLU 63	242	18	6734	-15.48	8.26	-0.05
359	SLU 64	226	17	6318	-14.52	7.71	-0.05
359	SLU 65	226	17	6324	-14.53	7.72	-0.05
359	SLU 66	232	17	6440	-14.89	7.93	-0.05
359	SLU 67	232	17	6444	-14.89	7.93	-0.05
359	SLU 68	231	17	6404	-14.76	7.88	-0.05
359	SLU 69	237	17	6521	-15.12	8.08	-0.05
359	SLU 70	237	17	6525	-15.12	8.09	-0.05
359	SLU 71	235	17	6479	-14.98	8.03	-0.05
359	SLU 72	235	17	6483	-14.99	8.03	-0.05
359	SLU 73	252	19	6976	-16.14	8.59	-0.05
359	SLU 74	258	19	7093	-16.49	8.79	-0.05
359	SLU 75	258	19	7096	-16.5	8.79	-0.05
359	SLU 76	256	19	7057	-16.37	8.74	-0.05
359	SLU 77	262	19	7174	-16.72	8.95	-0.05
359	SLU 78	262	19	7177	-16.73	8.95	-0.05
359	SLU 79	260	19	7132	-16.59	8.89	-0.05
359	SLU 80	261	19	7135	-16.59	8.9	-0.05
359	SLU 81	263	19	7250	-16.82	8.95	-0.05
359	SLU 82	263	19	7253	-16.82	8.95	-0.05
359	SLU 83	267	20	7330	-17.05	9.1	-0.05
359	SLU 84	267	20	7334	-17.05	9.11	-0.06
359	SLE RA 1	168	12	4728	-10.82	5.75	-0.03
359	SLE RA 2	169	12	4732	-10.83	5.75	-0.04
359	SLE RA 3	172	13	4810	-11.07	5.89	-0.04
359	SLE RA 4	173	13	4812	-11.07	5.89	-0.04
359	SLE RA 5	172	13	4786	-10.98	5.86	-0.04
359	SLE RA 6	175	13	4864	-11.22	5.99	-0.04
359	SLE RA 7	176	13	4866	-11.22	6	-0.04
359	SLE RA 8	174	13	4836	-11.13	5.96	-0.04
359	SLE RA 9	174	13	4838	-11.13	5.96	-0.04
359	SLE RA 10	186	14	5167	-11.9	6.33	-0.04
359	SLE RA 11	190	14	5245	-12.14	6.46	-0.04
359	SLE RA 12	190	14	5247	-12.14	6.47	-0.04
359	SLE RA 13	189	14	5221	-12.05	6.43	-0.04
359	SLE RA 14	192	14	5298	-12.29	6.57	-0.04
359	SLE RA 15	193	14	5301	-12.3	6.57	-0.04
359	SLE RA 16	191	14	5270	-12.2	6.53	-0.04
359	SLE RA 17	191	14	5273	-12.2	6.54	-0.04
359	SLE RA 18	193	14	5349	-12.35	6.57	-0.04
359	SLE RA 19	193	14	5352	-12.36	6.57	-0.04
359	SLE RA 20	196	14	5403	-12.51	6.67	-0.04
359	SLE RA 21	196	14	5405	-12.51	6.68	-0.04
359	SLE FR 1	168	12	4728	-10.82	5.75	-0.03
359	SLE FR 2	169	12	4729	-10.82	5.75	-0.03
359	SLE FR 3	170	12	4749	-10.89	5.79	-0.04
359	SLE FR 4	176	13	4915	-11.28	6	-0.04
359	SLE FR 5	177	13	4936	-11.34	6.04	-0.04
359	SLE FR 6	181	13	5038	-11.59	6.16	-0.04
359	SLE QP 1	168	12	4728	-10.82	5.75	-0.03
359	SLE QP 2	176	13	4914	-11.28	5.99	-0.04
359	SLD 1	1322	15	4750	-13.07	55.02	-0.02
359	SLD 2	1322	15	4750	-13.07	55.02	-0.02
359	SLD 3	1424	22	5388	-16.67	58.97	-0.04
359	SLD 4	1424	22	5388	-16.67	58.97	-0.04
359	SLD 5	365	2	3897	-6.36	14.7	0
359	SLD 6	365	2	3897	-6.36	14.7	0
359	SLD 7	705	27	6024	-18.36	27.89	-0.06
359	SLD 8	705	27	6024	-18.36	27.89	-0.06
359	SLD 9	-353	-1	3804	-4.21	-15.9	-0.01
359	SLD 10	-353	-1	3804	-4.21	-15.9	-0.01
359	SLD 11	-13	24	5931	-16.21	-2.71	-0.07
359	SLD 12	-13	24	5931	-16.21	-2.71	-0.07
359	SLD 13	-1073	3	4440	-5.9	-46.98	-0.04
359	SLD 14	-1073	3	4440	-5.9	-46.98	-0.04
359	SLD 15	-970	11	5078	-9.5	-43.03	-0.05
359	SLD 16	-970	11	5078	-9.5	-43.03	-0.05
359	SLV 1	2778	17	4520	-15.28	117.31	0
359	SLV 2	2778	17	4520	-15.28	117.31	0

Nodo	Cont.	Reazione a traslazione			Reazione a rotazione		
Ind.	N.br.	x	y	z	x	y	z
359	SLV 3	3023	35	6035	-24.05	126.79	-0.04
359	SLV 4	3023	35	6035	-24.05	126.79	-0.04
359	SLV 5	586	-13	2498	0.82	25.01	0.04
359	SLV 6	586	-13	2498	0.82	25.01	0.04
359	SLV 7	1401	47	7549	-28.42	56.61	-0.1
359	SLV 8	1401	47	7549	-28.42	56.61	-0.1
359	SLV 9	-1049	-21	2280	5.85	-44.62	0.03
359	SLV 10	-1049	-21	2280	5.85	-44.62	0.03
359	SLV 11	-234	39	7331	-23.38	-13.02	-0.11
359	SLV 12	-234	39	7331	-23.38	-13.02	-0.11
359	SLV 13	-2671	-9	3793	1.49	-114.8	-0.03
359	SLV 14	-2671	-9	3793	1.49	-114.8	-0.03
359	SLV 15	-2427	9	5308	-7.28	-105.32	-0.08
359	SLV 16	-2427	9	5308	-7.28	-105.32	-0.08
360	SLU 1	0	-9	4813	-2.29	-1.45	-0.04
360	SLU 2	0	-9	4820	-2.29	-1.44	-0.04
360	SLU 3	-1	-10	4944	-2.38	-1.5	-0.04
360	SLU 4	-1	-10	4948	-2.38	-1.5	-0.04
360	SLU 5	0	-10	4905	-2.35	-1.47	-0.04
360	SLU 6	-1	-10	5030	-2.44	-1.53	-0.04
360	SLU 7	-1	-10	5034	-2.44	-1.53	-0.04
360	SLU 8	0	-10	4984	-2.41	-1.5	-0.04
360	SLU 9	0	-10	4988	-2.41	-1.5	-0.04
360	SLU 10	2	-11	5513	-2.7	-1.56	-0.04
360	SLU 11	2	-11	5637	-2.79	-1.62	-0.04
360	SLU 12	2	-11	5641	-2.79	-1.62	-0.04
360	SLU 13	2	-11	5599	-2.76	-1.59	-0.04
360	SLU 14	2	-11	5723	-2.85	-1.65	-0.04
360	SLU 15	2	-11	5727	-2.85	-1.65	-0.04
360	SLU 16	2	-11	5678	-2.82	-1.62	-0.04
360	SLU 17	2	-11	5682	-2.82	-1.62	-0.04
360	SLU 18	3	-11	5803	-2.88	-1.62	-0.04
360	SLU 19	3	-11	5807	-2.88	-1.62	-0.04
360	SLU 20	3	-11	5889	-2.94	-1.64	-0.04
360	SLU 21	3	-11	5893	-2.94	-1.64	-0.04
360	SLU 22	2	-11	5453	-2.69	-1.57	-0.04
360	SLU 23	2	-11	5459	-2.69	-1.56	-0.04
360	SLU 24	2	-11	5584	-2.78	-1.62	-0.04
360	SLU 25	2	-11	5588	-2.78	-1.62	-0.04
360	SLU 26	2	-11	5545	-2.75	-1.59	-0.04
360	SLU 27	2	-11	5669	-2.84	-1.65	-0.04
360	SLU 28	2	-11	5674	-2.84	-1.65	-0.04
360	SLU 29	2	-11	5624	-2.81	-1.62	-0.04
360	SLU 30	2	-11	5628	-2.81	-1.62	-0.04
360	SLU 31	4	-12	6153	-3.1	-1.68	-0.05
360	SLU 32	4	-12	6277	-3.19	-1.74	-0.05
360	SLU 33	4	-12	6281	-3.19	-1.74	-0.05
360	SLU 34	4	-12	6239	-3.16	-1.71	-0.05
360	SLU 35	4	-12	6363	-3.25	-1.77	-0.05
360	SLU 36	4	-12	6367	-3.25	-1.77	-0.05
360	SLU 37	4	-12	6318	-3.22	-1.74	-0.05
360	SLU 38	4	-12	6322	-3.22	-1.74	-0.05
360	SLU 39	5	-12	6443	-3.28	-1.74	-0.05
360	SLU 40	5	-12	6447	-3.28	-1.73	-0.05
360	SLU 41	5	-12	6529	-3.34	-1.76	-0.05
360	SLU 42	5	-12	6533	-3.33	-1.76	-0.05
360	SLU 43	-1	-12	6037	-2.84	-1.84	-0.05
360	SLU 44	-1	-12	6044	-2.84	-1.83	-0.05
360	SLU 45	-2	-12	6168	-2.93	-1.89	-0.05
360	SLU 46	-1	-12	6172	-2.93	-1.89	-0.05
360	SLU 47	-1	-12	6130	-2.9	-1.86	-0.05
360	SLU 48	-2	-12	6254	-2.99	-1.92	-0.05
360	SLU 49	-1	-12	6258	-2.99	-1.92	-0.05
360	SLU 50	-1	-12	6209	-2.96	-1.89	-0.05
360	SLU 51	-1	-12	6213	-2.96	-1.89	-0.05
360	SLU 52	1	-13	6738	-3.25	-1.96	-0.05
360	SLU 53	1	-13	6862	-3.34	-2.01	-0.05
360	SLU 54	1	-13	6866	-3.34	-2.01	-0.05
360	SLU 55	1	-13	6823	-3.31	-1.98	-0.05
360	SLU 56	1	-14	6948	-3.4	-2.04	-0.05
360	SLU 57	1	-14	6952	-3.4	-2.04	-0.05
360	SLU 58	1	-13	6902	-3.37	-2.01	-0.05
360	SLU 59	1	-13	6906	-3.37	-2.01	-0.05
360	SLU 60	2	-14	7028	-3.43	-2.01	-0.05
360	SLU 61	2	-14	7032	-3.43	-2.01	-0.05
360	SLU 62	2	-14	7114	-3.49	-2.04	-0.05
360	SLU 63	2	-14	7118	-3.49	-2.04	-0.05
360	SLU 64	1	-13	6677	-3.24	-1.96	-0.05
360	SLU 65	1	-13	6684	-3.24	-1.95	-0.05
360	SLU 66	1	-13	6808	-3.33	-2.01	-0.05
360	SLU 67	1	-13	6812	-3.33	-2.01	-0.05
360	SLU 68	1	-13	6770	-3.3	-1.98	-0.05
360	SLU 69	1	-14	6894	-3.39	-2.04	-0.05
360	SLU 70	1	-14	6898	-3.39	-2.04	-0.05
360	SLU 71	1	-13	6849	-3.36	-2.01	-0.05
360	SLU 72	1	-13	6853	-3.36	-2.01	-0.05
360	SLU 73	3	-14	7377	-3.65	-2.07	-0.06
360	SLU 74	3	-14	7502	-3.74	-2.13	-0.06
360	SLU 75	3	-15	7506	-3.74	-2.13	-0.06
360	SLU 76	3	-14	7463	-3.71	-2.1	-0.06
360	SLU 77	3	-15	7587	-3.8	-2.16	-0.06

Nodo	Cont.	Reazione a traslazione			Reazione a rotazione		
Ind.	N.br.	x	y	z	x	y	z
360	SLU 78	3	-15	7591	-3.8	-2.16	-0.06
360	SLU 79	3	-15	7542	-3.77	-2.13	-0.06
360	SLU 80	3	-15	7546	-3.77	-2.13	-0.06
360	SLU 81	4	-15	7668	-3.83	-2.13	-0.06
360	SLU 82	4	-15	7672	-3.83	-2.13	-0.06
360	SLU 83	4	-15	7753	-3.89	-2.16	-0.06
360	SLU 84	4	-15	7758	-3.89	-2.15	-0.06
360	SLE RA 1	0	-10	4996	-2.41	-1.48	-0.04
360	SLE RA 2	0	-10	5000	-2.4	-1.48	-0.04
360	SLE RA 3	0	-10	5083	-2.47	-1.52	-0.04
360	SLE RA 4	0	-10	5086	-2.46	-1.52	-0.04
360	SLE RA 5	0	-10	5057	-2.44	-1.5	-0.04
360	SLE RA 6	0	-10	5140	-2.5	-1.54	-0.04
360	SLE RA 7	0	-10	5143	-2.5	-1.53	-0.04
360	SLE RA 8	0	-10	5110	-2.48	-1.52	-0.04
360	SLE RA 9	0	-10	5113	-2.48	-1.51	-0.04
360	SLE RA 10	2	-11	5462	-2.68	-1.56	-0.04
360	SLE RA 11	2	-11	5545	-2.74	-1.6	-0.04
360	SLE RA 12	2	-11	5548	-2.74	-1.6	-0.04
360	SLE RA 13	2	-11	5520	-2.72	-1.58	-0.04
360	SLE RA 14	2	-11	5602	-2.78	-1.62	-0.04
360	SLE RA 15	2	-11	5605	-2.78	-1.61	-0.04
360	SLE RA 16	2	-11	5572	-2.76	-1.6	-0.04
360	SLE RA 17	2	-11	5575	-2.76	-1.59	-0.04
360	SLE RA 18	2	-11	5656	-2.8	-1.59	-0.04
360	SLE RA 19	3	-11	5659	-2.8	-1.59	-0.04
360	SLE RA 20	2	-11	5713	-2.84	-1.61	-0.04
360	SLE RA 21	2	-11	5716	-2.84	-1.61	-0.04
360	SLE FR 1	0	-10	4996	-2.41	-1.48	-0.04
360	SLE FR 2	0	-10	4997	-2.41	-1.48	-0.04
360	SLE FR 3	0	-10	5018	-2.42	-1.49	-0.04
360	SLE FR 4	1	-10	5195	-2.52	-1.51	-0.04
360	SLE FR 5	1	-10	5217	-2.54	-1.52	-0.04
360	SLE FR 6	1	-10	5326	-2.6	-1.54	-0.04
360	SLE QP 1	0	-10	4996	-2.41	-1.48	-0.04
360	SLE QP 2	1	-10	5194	-2.52	-1.51	-0.04
360	SLD 1	1145	-2	4707	-5.61	47.64	-0.02
360	SLD 2	1145	-2	4707	-5.61	47.64	-0.02
360	SLD 3	1244	-10	5424	-3.83	51.15	-0.04
360	SLD 4	1244	-10	5424	-3.83	51.15	-0.04
360	SLD 5	194	3	3961	-6.15	7.91	0
360	SLD 6	194	3	3961	-6.15	7.91	0
360	SLD 7	524	-21	6350	-0.21	19.61	-0.08
360	SLD 8	524	-21	6350	-0.21	19.61	-0.08
360	SLD 9	-522	1	4037	-4.83	-22.64	0
360	SLD 10	-522	1	4037	-4.83	-22.64	0
360	SLD 11	-192	-23	6427	1.1	-10.94	-0.08
360	SLD 12	-192	-23	6427	1.1	-10.94	-0.08
360	SLD 13	-1243	-11	4963	-1.21	-54.18	-0.04
360	SLD 14	-1243	-11	4963	-1.21	-54.18	-0.04
360	SLD 15	-1144	-18	5680	0.57	-50.67	-0.06
360	SLD 16	-1144	-18	5680	0.57	-50.67	-0.06
360	SLV 1	2600	8	4035	-9.82	110.14	0.01
360	SLV 2	2600	8	4035	-9.82	110.14	0.01
360	SLV 3	2837	-9	5741	-5.48	118.53	-0.04
360	SLV 4	2837	-9	5741	-5.48	118.53	-0.04
360	SLV 5	422	21	2259	-11.29	19.26	0.06
360	SLV 6	422	21	2259	-11.29	19.26	0.06
360	SLV 7	1210	-35	7945	3.17	47.23	-0.13
360	SLV 8	1210	-35	7945	3.17	47.23	-0.13
360	SLV 9	-1208	15	2443	-8.22	-50.25	0.05
360	SLV 10	-1208	15	2443	-8.22	-50.25	0.05
360	SLV 11	-420	-41	8128	6.25	-22.29	-0.14
360	SLV 12	-420	-41	8128	6.25	-22.29	-0.14
360	SLV 13	-2835	-11	4646	0.43	-121.56	-0.04
360	SLV 14	-2835	-11	4646	0.43	-121.56	-0.04
360	SLV 15	-2598	-28	6352	4.77	-113.17	-0.09
360	SLV 16	-2598	-28	6352	4.77	-113.17	-0.09
361	SLU 1	-216	-629	6619	-406.36	-9.94	-0.08
361	SLU 2	-216	-630	6629	-406.89	-9.95	-0.08
361	SLU 3	-224	-645	6798	-417.17	-10.3	-0.09
361	SLU 4	-224	-645	6804	-417.49	-10.31	-0.09
361	SLU 5	-221	-638	6741	-413.26	-10.17	-0.09
361	SLU 6	-228	-652	6911	-423.54	-10.52	-0.09
361	SLU 7	-228	-653	6917	-423.86	-10.53	-0.09
361	SLU 8	-225	-644	6845	-419.09	-10.38	-0.09
361	SLU 9	-225	-645	6850	-419.41	-10.39	-0.09
361	SLU 10	-244	-719	7581	-464.31	-11.33	-0.09
361	SLU 11	-252	-733	7751	-474.59	-11.68	-0.1
361	SLU 12	-252	-734	7757	-474.91	-11.69	-0.1
361	SLU 13	-249	-726	7694	-470.68	-11.55	-0.1
361	SLU 14	-257	-741	7864	-480.95	-11.9	-0.1
361	SLU 15	-257	-741	7869	-481.28	-11.91	-0.1
361	SLU 16	-254	-733	7797	-476.51	-11.76	-0.1
361	SLU 17	-254	-733	7803	-476.83	-11.77	-0.1
361	SLU 18	-257	-756	7980	-488.38	-11.92	-0.1
361	SLU 19	-257	-756	7986	-488.7	-11.92	-0.1
361	SLU 20	-261	-763	8093	-494.75	-12.14	-0.1
361	SLU 21	-262	-764	8099	-495.07	-12.14	-0.1
361	SLU 22	-244	-717	7509	-461.25	-11.3	-0.09
361	SLU 23	-244	-718	7518	-461.78	-11.31	-0.09

Nodo	Cont.	Reazione a traslazione			Reazione a rotazione		
Ind.	N.br.	x	y	z	x	y	z
361	SLU 24	-252	-733	7688	-472.06	-11.66	-0.1
361	SLU 25	-252	-733	7693	-472.38	-11.67	-0.1
361	SLU 26	-249	-725	7631	-468.15	-11.53	-0.1
361	SLU 27	-257	-740	7800	-478.42	-11.88	-0.1
361	SLU 28	-257	-741	7806	-478.75	-11.89	-0.1
361	SLU 29	-254	-732	7734	-473.98	-11.74	-0.1
361	SLU 30	-254	-732	7740	-474.3	-11.75	-0.1
361	SLU 31	-273	-806	8471	-519.2	-12.69	-0.1
361	SLU 32	-281	-821	8640	-529.48	-13.04	-0.11
361	SLU 33	-281	-822	8646	-529.8	-13.05	-0.11
361	SLU 34	-278	-814	8584	-525.56	-12.91	-0.11
361	SLU 35	-286	-829	8753	-535.84	-13.26	-0.11
361	SLU 36	-286	-829	8759	-536.16	-13.27	-0.11
361	SLU 37	-283	-820	8687	-531.39	-13.12	-0.11
361	SLU 38	-283	-821	8693	-531.72	-13.13	-0.11
361	SLU 39	-285	-843	8870	-543.27	-13.28	-0.11
361	SLU 40	-285	-844	8875	-543.59	-13.28	-0.11
361	SLU 41	-290	-851	8983	-549.64	-13.5	-0.11
361	SLU 42	-290	-851	8988	-549.96	-13.5	-0.11
361	SLU 43	-271	-788	8300	-509.45	-12.46	-0.1
361	SLU 44	-271	-789	8309	-509.98	-12.47	-0.1
361	SLU 45	-278	-804	8479	-520.26	-12.82	-0.11
361	SLU 46	-279	-804	8484	-520.58	-12.82	-0.11
361	SLU 47	-276	-796	8422	-516.35	-12.69	-0.11
361	SLU 48	-283	-811	8592	-526.63	-13.04	-0.11
361	SLU 49	-283	-811	8597	-526.95	-13.04	-0.11
361	SLU 50	-280	-803	8525	-522.18	-12.9	-0.11
361	SLU 51	-280	-803	8531	-522.5	-12.9	-0.11
361	SLU 52	-299	-877	9262	-567.4	-13.85	-0.12
361	SLU 53	-307	-892	9432	-577.68	-14.2	-0.12
361	SLU 54	-307	-893	9437	-578	-14.2	-0.12
361	SLU 55	-304	-885	9375	-573.76	-14.07	-0.12
361	SLU 56	-312	-899	9544	-584.04	-14.42	-0.12
361	SLU 57	-312	-900	9550	-584.36	-14.42	-0.12
361	SLU 58	-309	-891	9478	-579.59	-14.28	-0.12
361	SLU 59	-309	-892	9484	-579.92	-14.29	-0.12
361	SLU 60	-311	-914	9661	-591.47	-14.43	-0.12
361	SLU 61	-312	-915	9667	-591.79	-14.44	-0.12
361	SLU 62	-316	-922	9774	-597.84	-14.65	-0.12
361	SLU 63	-316	-922	9779	-598.16	-14.66	-0.12
361	SLU 64	-299	-876	9189	-564.34	-13.82	-0.11
361	SLU 65	-299	-877	9199	-564.87	-13.83	-0.11
361	SLU 66	-307	-891	9368	-575.15	-14.18	-0.12
361	SLU 67	-307	-892	9374	-575.47	-14.18	-0.12
361	SLU 68	-304	-884	9312	-571.23	-14.05	-0.12
361	SLU 69	-312	-899	9481	-581.51	-14.4	-0.12
361	SLU 70	-312	-899	9487	-581.83	-14.4	-0.12
361	SLU 71	-309	-891	9415	-577.07	-14.26	-0.12
361	SLU 72	-309	-891	9421	-577.39	-14.26	-0.12
361	SLU 73	-328	-965	10152	-622.29	-15.21	-0.13
361	SLU 74	-336	-980	10321	-632.57	-15.56	-0.13
361	SLU 75	-336	-980	10327	-632.89	-15.56	-0.13
361	SLU 76	-333	-972	10264	-628.65	-15.43	-0.13
361	SLU 77	-340	-987	10434	-638.93	-15.78	-0.13
361	SLU 78	-341	-988	10440	-639.25	-15.78	-0.13
361	SLU 79	-337	-979	10368	-634.48	-15.64	-0.13
361	SLU 80	-338	-980	10373	-634.8	-15.65	-0.13
361	SLU 81	-340	-1002	10550	-646.36	-15.79	-0.13
361	SLU 82	-340	-1003	10556	-646.68	-15.8	-0.13
361	SLU 83	-345	-1010	10663	-652.73	-16.01	-0.13
361	SLU 84	-345	-1010	10669	-653.05	-16.02	-0.13
361	SLE RA 1	-224	-654	6873	-422.04	-10.33	-0.09
361	SLE RA 2	-224	-655	6880	-422.4	-10.34	-0.09
361	SLE RA 3	-229	-665	6993	-429.25	-10.57	-0.09
361	SLE RA 4	-229	-665	6996	-429.46	-10.57	-0.09
361	SLE RA 5	-227	-660	6955	-426.64	-10.48	-0.09
361	SLE RA 6	-232	-670	7068	-433.49	-10.72	-0.09
361	SLE RA 7	-232	-670	7072	-433.71	-10.72	-0.09
361	SLE RA 8	-230	-664	7024	-430.53	-10.62	-0.09
361	SLE RA 9	-230	-665	7027	-430.74	-10.63	-0.09
361	SLE RA 10	-243	-714	7515	-460.68	-11.26	-0.09
361	SLE RA 11	-248	-724	7628	-467.53	-11.49	-0.1
361	SLE RA 12	-248	-724	7632	-467.74	-11.49	-0.1
361	SLE RA 13	-246	-719	7590	-464.92	-11.4	-0.1
361	SLE RA 14	-251	-729	7703	-471.77	-11.64	-0.1
361	SLE RA 15	-251	-729	7707	-471.99	-11.64	-0.1
361	SLE RA 16	-249	-723	7659	-468.81	-11.55	-0.1
361	SLE RA 17	-249	-724	7663	-469.02	-11.55	-0.1
361	SLE RA 18	-251	-739	7781	-476.72	-11.65	-0.1
361	SLE RA 19	-251	-739	7784	-476.94	-11.65	-0.1
361	SLE RA 20	-254	-744	7856	-480.97	-11.79	-0.1
361	SLE RA 21	-254	-744	7860	-481.18	-11.8	-0.1
361	SLE FR 1	-224	-654	6873	-422.04	-10.33	-0.09
361	SLE FR 2	-224	-654	6874	-422.11	-10.33	-0.09
361	SLE FR 3	-225	-656	6903	-423.74	-10.39	-0.09
361	SLE FR 4	-232	-680	7147	-438.52	-10.73	-0.09
361	SLE FR 5	-233	-682	7175	-440.14	-10.78	-0.09
361	SLE FR 6	-237	-696	7327	-449.38	-10.99	-0.09
361	SLE QP 1	-224	-654	6873	-422.04	-10.33	-0.09
361	SLE QP 2	-232	-680	7145	-438.45	-10.73	-0.09
361	SLD 1	936	-408	6222	-368.78	39.25	0.5

Nodo	Cont.	Reazione a traslazione			Reazione a rotazione		
Ind.	N.br.	x	y	z	x	y	z
361	SLD 2	936	-408	6222	-368.78	39.25	0.5
361	SLD 3	884	-763	7388	-453.04	37.18	0.37
361	SLD 4	884	-763	7388	-453.04	37.18	0.37
361	SLD 5	198	-60	5099	-289.76	7.41	0.28
361	SLD 6	198	-60	5099	-289.76	7.41	0.28
361	SLD 7	23	-1243	8987	-570.61	0.5	-0.15
361	SLD 8	23	-1243	8987	-570.61	0.5	-0.15
361	SLD 9	-487	-116	5304	-306.28	-21.95	-0.03
361	SLD 10	-487	-116	5304	-306.28	-21.95	-0.03
361	SLD 11	-662	-1300	9191	-587.13	-28.86	-0.46
361	SLD 12	-662	-1300	9191	-587.13	-28.86	-0.46
361	SLD 13	-1348	-596	6903	-423.85	-58.63	-0.55
361	SLD 14	-1348	-596	6903	-423.85	-58.63	-0.55
361	SLD 15	-1400	-951	8069	-508.11	-60.71	-0.68
361	SLD 16	-1400	-951	8069	-508.11	-60.71	-0.68
361	SLV 1	2429	-39	4967	-273.9	103.11	1.27
361	SLV 2	2429	-39	4967	-273.9	103.11	1.27
361	SLV 3	2304	-879	7747	-474.44	98.1	0.95
361	SLV 4	2304	-879	7747	-474.44	98.1	0.95
361	SLV 5	757	787	2276	-84.94	31.02	0.81
361	SLV 6	757	787	2276	-84.94	31.02	0.81
361	SLV 7	338	-2014	11541	-753.39	14.32	-0.27
361	SLV 8	338	-2014	11541	-753.39	14.32	-0.27
361	SLV 9	-802	654	2749	-123.51	-35.78	0.09
361	SLV 10	-802	654	2749	-123.51	-35.78	0.09
361	SLV 11	-1221	-2146	12015	-791.95	-52.47	-0.99
361	SLV 12	-1221	-2146	12015	-791.95	-52.47	-0.99
361	SLV 13	-2767	-480	6544	-402.45	-119.55	-1.13
361	SLV 14	-2767	-480	6544	-402.45	-119.55	-1.13
361	SLV 15	-2893	-1320	9324	-602.99	-124.56	-1.45
361	SLV 16	-2893	-1320	9324	-602.99	-124.56	-1.45
362	SLU 1	-425	-17	4352	1.35	-17.34	0.03
362	SLU 2	-426	-17	4358	1.35	-17.36	0.03
362	SLU 3	-441	-17	4470	1.36	-17.96	0.03
362	SLU 4	-441	-17	4474	1.36	-17.97	0.03
362	SLU 5	-435	-17	4436	1.34	-17.74	0.03
362	SLU 6	-450	-17	4547	1.35	-18.35	0.03
362	SLU 7	-450	-17	4551	1.35	-18.36	0.03
362	SLU 8	-444	-17	4506	1.33	-18.12	0.03
362	SLU 9	-445	-17	4510	1.33	-18.13	0.03
362	SLU 10	-486	-19	4996	1.62	-19.81	0.04
362	SLU 11	-500	-20	5108	1.63	-20.41	0.04
362	SLU 12	-501	-20	5112	1.63	-20.42	0.04
362	SLU 13	-495	-19	5074	1.6	-20.2	0.04
362	SLU 14	-510	-20	5185	1.62	-20.8	0.04
362	SLU 15	-510	-20	5189	1.62	-20.81	0.04
362	SLU 16	-504	-20	5144	1.6	-20.57	0.04
362	SLU 17	-504	-20	5148	1.59	-20.58	0.04
362	SLU 18	-511	-20	5263	1.73	-20.85	0.04
362	SLU 19	-511	-20	5267	1.73	-20.86	0.04
362	SLU 20	-520	-20	5340	1.72	-21.24	0.04
362	SLU 21	-520	-20	5344	1.72	-21.25	0.04
362	SLU 22	-484	-19	4938	1.61	-19.76	0.04
362	SLU 23	-485	-19	4945	1.6	-19.77	0.04
362	SLU 24	-500	-20	5056	1.62	-20.38	0.04
362	SLU 25	-500	-20	5060	1.62	-20.39	0.04
362	SLU 26	-494	-19	5022	1.59	-20.16	0.04
362	SLU 27	-509	-20	5134	1.61	-20.77	0.04
362	SLU 28	-509	-20	5138	1.6	-20.78	0.04
362	SLU 29	-503	-20	5093	1.58	-20.53	0.04
362	SLU 30	-504	-20	5097	1.58	-20.55	0.04
362	SLU 31	-545	-22	5583	1.87	-22.23	0.04
362	SLU 32	-559	-22	5694	1.88	-22.83	0.04
362	SLU 33	-560	-22	5698	1.88	-22.84	0.04
362	SLU 34	-554	-22	5660	1.86	-22.62	0.04
362	SLU 35	-569	-22	5772	1.87	-23.22	0.04
362	SLU 36	-569	-22	5776	1.87	-23.23	0.04
362	SLU 37	-563	-22	5731	1.85	-22.99	0.04
362	SLU 38	-563	-22	5735	1.85	-23	0.04
362	SLU 39	-570	-23	5849	1.99	-23.26	0.04
362	SLU 40	-570	-23	5854	1.98	-23.28	0.04
362	SLU 41	-579	-23	5927	1.97	-23.65	0.04
362	SLU 42	-579	-23	5931	1.97	-23.66	0.04
362	SLU 43	-533	-21	5456	1.67	-21.71	0.04
362	SLU 44	-533	-21	5463	1.67	-21.73	0.04
362	SLU 45	-548	-21	5574	1.68	-22.33	0.04
362	SLU 46	-548	-21	5578	1.68	-22.34	0.04
362	SLU 47	-543	-21	5540	1.66	-22.12	0.04
362	SLU 48	-557	-22	5652	1.67	-22.72	0.04
362	SLU 49	-558	-22	5656	1.67	-22.73	0.04
362	SLU 50	-552	-21	5611	1.65	-22.49	0.04
362	SLU 51	-552	-21	5615	1.65	-22.5	0.04
362	SLU 52	-593	-23	6101	1.93	-24.18	0.05
362	SLU 53	-608	-24	6212	1.95	-24.79	0.05
362	SLU 54	-608	-24	6216	1.95	-24.8	0.05
362	SLU 55	-602	-24	6178	1.92	-24.57	0.05
362	SLU 56	-617	-24	6290	1.94	-25.18	0.05
362	SLU 57	-617	-24	6294	1.94	-25.19	0.05
362	SLU 58	-611	-24	6249	1.92	-24.94	0.05
362	SLU 59	-612	-24	6253	1.91	-24.96	0.05
362	SLU 60	-618	-24	6368	2.05	-25.22	0.05

Nodo	Cont.	Reazione a traslazione			Reazione a rotazione		
Ind.	N.br.	x	y	z	x	y	z
362	SLU 61	-618	-24	6372	2.05	-25.23	0.05
362	SLU 62	-628	-25	6445	2.04	-25.61	0.05
362	SLU 63	-628	-25	6449	2.04	-25.62	0.05
362	SLU 64	-592	-23	6043	1.93	-24.13	0.05
362	SLU 65	-592	-23	6049	1.92	-24.15	0.05
362	SLU 66	-607	-24	6161	1.94	-24.75	0.05
362	SLU 67	-607	-24	6165	1.93	-24.76	0.05
362	SLU 68	-602	-24	6127	1.91	-24.54	0.05
362	SLU 69	-616	-24	6238	1.93	-25.14	0.05
362	SLU 70	-617	-24	6242	1.92	-25.15	0.05
362	SLU 71	-611	-24	6197	1.9	-24.91	0.05
362	SLU 72	-611	-24	6201	1.9	-24.92	0.05
362	SLU 73	-652	-26	6687	2.19	-26.6	0.05
362	SLU 74	-667	-26	6799	2.2	-27.2	0.05
362	SLU 75	-667	-26	6803	2.2	-27.22	0.05
362	SLU 76	-661	-26	6765	2.18	-26.99	0.05
362	SLU 77	-676	-26	6876	2.19	-27.59	0.05
362	SLU 78	-676	-27	6880	2.19	-27.6	0.05
362	SLU 79	-670	-26	6835	2.17	-27.36	0.05
362	SLU 80	-671	-26	6839	2.17	-27.37	0.05
362	SLU 81	-677	-27	6954	2.31	-27.64	0.05
362	SLU 82	-677	-27	6958	2.3	-27.65	0.05
362	SLU 83	-687	-27	7031	2.29	-28.03	0.05
362	SLU 84	-687	-27	7035	2.29	-28.04	0.05
362	SLE RA 1	-442	-17	4519	1.43	-18.03	0.03
362	SLE RA 2	-443	-17	4524	1.42	-18.04	0.03
362	SLE RA 3	-452	-18	4598	1.43	-18.44	0.03
362	SLE RA 4	-453	-18	4601	1.43	-18.45	0.03
362	SLE RA 5	-449	-18	4575	1.42	-18.3	0.03
362	SLE RA 6	-459	-18	4650	1.43	-18.7	0.04
362	SLE RA 7	-459	-18	4652	1.42	-18.71	0.04
362	SLE RA 8	-455	-18	4622	1.41	-18.55	0.03
362	SLE RA 9	-455	-18	4625	1.41	-18.55	0.03
362	SLE RA 10	-482	-19	4949	1.6	-19.68	0.04
362	SLE RA 11	-492	-19	5023	1.61	-20.08	0.04
362	SLE RA 12	-492	-19	5026	1.61	-20.09	0.04
362	SLE RA 13	-489	-19	5001	1.59	-19.94	0.04
362	SLE RA 14	-498	-20	5075	1.6	-20.34	0.04
362	SLE RA 15	-499	-20	5078	1.6	-20.35	0.04
362	SLE RA 16	-495	-19	5048	1.59	-20.18	0.04
362	SLE RA 17	-495	-19	5050	1.59	-20.19	0.04
362	SLE RA 18	-499	-20	5127	1.68	-20.37	0.04
362	SLE RA 19	-499	-20	5130	1.68	-20.37	0.04
362	SLE RA 20	-505	-20	5178	1.67	-20.63	0.04
362	SLE RA 21	-506	-20	5181	1.67	-20.63	0.04
362	SLE FR 1	-442	-17	4519	1.43	-18.03	0.03
362	SLE FR 2	-442	-17	4520	1.43	-18.03	0.03
362	SLE FR 3	-445	-17	4540	1.42	-18.13	0.03
362	SLE FR 4	-459	-18	4702	1.5	-18.73	0.04
362	SLE FR 5	-462	-18	4722	1.5	-18.83	0.04
362	SLE FR 6	-471	-19	4823	1.55	-19.2	0.04
362	SLE QP 1	-442	-17	4519	1.43	-18.03	0.03
362	SLE QP 2	-459	-18	4702	1.5	-18.73	0.04
362	SLD 1	671	-12	4116	-1.27	30.72	0.03
362	SLD 2	671	-12	4116	-1.27	30.72	0.03
362	SLD 3	610	-17	4767	1.21	28.34	0.05
362	SLD 4	610	-17	4767	1.21	28.34	0.05
362	SLD 5	-28	-8	3539	-3.1	-0.28	0.01
362	SLD 6	-28	-8	3539	-3.1	-0.28	0.01
362	SLD 7	-231	-25	5708	5.18	-8.22	0.07
362	SLD 8	-231	-25	5708	5.18	-8.22	0.07
362	SLD 9	-688	-11	3695	-2.18	-29.24	0
362	SLD 10	-688	-11	3695	-2.18	-29.24	0
362	SLD 11	-891	-28	5864	6.1	-37.18	0.06
362	SLD 12	-891	-28	5864	6.1	-37.18	0.06
362	SLD 13	-1528	-19	4636	1.79	-65.8	0.02
362	SLD 14	-1528	-19	4636	1.79	-65.8	0.02
362	SLD 15	-1589	-24	5287	4.27	-68.18	0.04
362	SLD 16	-1589	-24	5287	4.27	-68.18	0.04
362	SLV 1	2114	-3	3335	-5.04	93.91	0.03
362	SLV 2	2114	-3	3335	-5.04	93.91	0.03
362	SLV 3	1966	-16	4885	0.88	88.11	0.07
362	SLV 4	1966	-16	4885	0.88	88.11	0.07
362	SLV 5	537	5	1940	-9.44	23.85	-0.03
362	SLV 6	537	5	1940	-9.44	23.85	-0.03
362	SLV 7	44	-36	7108	10.29	4.53	0.11
362	SLV 8	44	-36	7108	10.29	4.53	0.11
362	SLV 9	-963	0	2295	-7.29	-41.99	-0.04
362	SLV 10	-963	0	2295	-7.29	-41.99	-0.04
362	SLV 11	-1456	-41	7463	12.44	-61.31	0.1
362	SLV 12	-1456	-41	7463	12.44	-61.31	0.1
362	SLV 13	-2885	-21	4518	2.12	-125.57	0
362	SLV 14	-2885	-21	4518	2.12	-125.57	0
362	SLV 15	-3033	-33	6069	8.04	-131.37	0.04
362	SLV 16	-3033	-33	6069	8.04	-131.37	0.04
363	SLU 1	-591	-3	4155	-3.36	-24.58	0.02
363	SLU 2	-591	-3	4161	-3.37	-24.61	0.02
363	SLU 3	-612	-3	4266	-3.52	-25.47	0.02
363	SLU 4	-612	-3	4270	-3.53	-25.48	0.02
363	SLU 5	-605	-2	4235	-3.5	-25.18	0.02
363	SLU 6	-625	-3	4340	-3.65	-26.03	0.02

Nodo	Cont.	Reazione a traslazione			Reazione a rotazione		
Ind.	N.br.	x	y	z	x	y	z
363	SLU 7	-626	-3	4344	-3.66	-26.05	0.02
363	SLU 8	-618	-2	4301	-3.61	-25.72	0.02
363	SLU 9	-618	-2	4305	-3.62	-25.73	0.02
363	SLU 10	-678	-3	4776	-3.71	-28.27	0.02
363	SLU 11	-699	-3	4881	-3.86	-29.12	0.02
363	SLU 12	-699	-3	4885	-3.87	-29.14	0.02
363	SLU 13	-692	-3	4849	-3.84	-28.84	0.02
363	SLU 14	-713	-3	4954	-3.99	-29.69	0.02
363	SLU 15	-713	-3	4958	-4	-29.71	0.02
363	SLU 16	-705	-3	4916	-3.95	-29.38	0.02
363	SLU 17	-705	-3	4920	-3.96	-29.39	0.02
363	SLU 18	-715	-3	5033	-3.84	-29.81	0.02
363	SLU 19	-716	-3	5037	-3.85	-29.83	0.02
363	SLU 20	-729	-3	5106	-3.96	-30.38	0.02
363	SLU 21	-729	-3	5110	-3.98	-30.4	0.02
363	SLU 22	-675	-3	4716	-3.71	-28.13	0.02
363	SLU 23	-676	-3	4723	-3.73	-28.16	0.02
363	SLU 24	-697	-3	4828	-3.88	-29.01	0.02
363	SLU 25	-697	-3	4832	-3.89	-29.03	0.02
363	SLU 26	-690	-3	4796	-3.86	-28.72	0.02
363	SLU 27	-710	-3	4901	-4.01	-29.58	0.02
363	SLU 28	-711	-3	4905	-4.02	-29.59	0.02
363	SLU 29	-703	-3	4863	-3.97	-29.26	0.02
363	SLU 30	-703	-3	4867	-3.98	-29.28	0.02
363	SLU 31	-763	-4	5338	-4.07	-31.82	0.02
363	SLU 32	-784	-4	5443	-4.22	-32.67	0.02
363	SLU 33	-784	-4	5447	-4.23	-32.69	0.02
363	SLU 34	-777	-4	5411	-4.2	-32.38	0.02
363	SLU 35	-797	-4	5516	-4.35	-33.24	0.02
363	SLU 36	-798	-4	5520	-4.36	-33.25	0.02
363	SLU 37	-790	-4	5478	-4.31	-32.92	0.02
363	SLU 38	-790	-4	5482	-4.32	-32.94	0.02
363	SLU 39	-800	-4	5595	-4.2	-33.36	0.02
363	SLU 40	-800	-4	5599	-4.21	-33.37	0.02
363	SLU 41	-813	-4	5668	-4.32	-33.92	0.02
363	SLU 42	-814	-4	5672	-4.33	-33.94	0.02
363	SLU 43	-739	-3	5209	-4.24	-30.74	0.02
363	SLU 44	-740	-3	5215	-4.26	-30.77	0.02
363	SLU 45	-760	-3	5320	-4.41	-31.62	0.02
363	SLU 46	-761	-3	5324	-4.42	-31.64	0.02
363	SLU 47	-753	-3	5288	-4.38	-31.34	0.02
363	SLU 48	-774	-3	5393	-4.53	-32.19	0.02
363	SLU 49	-774	-3	5397	-4.54	-32.21	0.02
363	SLU 50	-766	-3	5355	-4.5	-31.88	0.02
363	SLU 51	-767	-3	5359	-4.51	-31.89	0.02
363	SLU 52	-827	-4	5830	-4.59	-34.43	0.02
363	SLU 53	-847	-4	5935	-4.74	-35.28	0.02
363	SLU 54	-848	-4	5939	-4.75	-35.3	0.02
363	SLU 55	-840	-4	5903	-4.72	-35	0.02
363	SLU 56	-861	-4	6008	-4.87	-35.85	0.02
363	SLU 57	-861	-4	6012	-4.88	-35.87	0.02
363	SLU 58	-853	-4	5970	-4.83	-35.54	0.02
363	SLU 59	-854	-4	5974	-4.84	-35.55	0.02
363	SLU 60	-863	-4	6087	-4.72	-35.97	0.02
363	SLU 61	-864	-4	6091	-4.73	-35.99	0.02
363	SLU 62	-877	-4	6160	-4.85	-36.54	0.02
363	SLU 63	-877	-4	6164	-4.86	-36.56	0.02
363	SLU 64	-824	-4	5770	-4.6	-34.29	0.02
363	SLU 65	-824	-4	5777	-4.62	-34.32	0.02
363	SLU 66	-845	-4	5882	-4.76	-35.17	0.02
363	SLU 67	-845	-4	5886	-4.77	-35.19	0.02
363	SLU 68	-838	-4	5850	-4.74	-34.88	0.02
363	SLU 69	-858	-4	5955	-4.89	-35.74	0.02
363	SLU 70	-859	-4	5959	-4.9	-35.75	0.02
363	SLU 71	-851	-4	5917	-4.85	-35.42	0.02
363	SLU 72	-851	-4	5921	-4.86	-35.44	0.02
363	SLU 73	-911	-4	6392	-4.95	-37.98	0.02
363	SLU 74	-932	-4	6497	-5.1	-38.83	0.03
363	SLU 75	-932	-4	6501	-5.11	-38.85	0.03
363	SLU 76	-925	-4	6465	-5.08	-38.54	0.03
363	SLU 77	-945	-4	6570	-5.23	-39.4	0.03
363	SLU 78	-946	-4	6574	-5.24	-39.41	0.03
363	SLU 79	-938	-4	6532	-5.19	-39.08	0.03
363	SLU 80	-938	-4	6536	-5.2	-39.1	0.03
363	SLU 81	-948	-4	6649	-5.08	-39.52	0.03
363	SLU 82	-948	-4	6652	-5.09	-39.53	0.03
363	SLU 83	-962	-4	6722	-5.21	-40.08	0.03
363	SLU 84	-962	-4	6726	-5.22	-40.1	0.03
363	SLE RA 1	-615	-3	4315	-3.46	-25.6	0.02
363	SLE RA 2	-615	-3	4320	-3.47	-25.61	0.02
363	SLE RA 3	-629	-3	4390	-3.57	-26.18	0.02
363	SLE RA 4	-629	-3	4392	-3.58	-26.2	0.02
363	SLE RA 5	-624	-3	4368	-3.56	-25.99	0.02
363	SLE RA 6	-638	-3	4438	-3.65	-26.56	0.02
363	SLE RA 7	-638	-3	4441	-3.66	-26.57	0.02
363	SLE RA 8	-633	-3	4413	-3.63	-26.35	0.02
363	SLE RA 9	-633	-3	4416	-3.64	-26.36	0.02
363	SLE RA 10	-673	-3	4729	-3.69	-28.05	0.02
363	SLE RA 11	-687	-3	4799	-3.79	-28.62	0.02
363	SLE RA 12	-687	-3	4802	-3.8	-28.63	0.02
363	SLE RA 13	-682	-3	4778	-3.78	-28.43	0.02

Nodo	Cont.	Reazione a traslazione			Reazione a rotazione		
Ind.	N.br.	x	y	z	x	y	z
363	SLE RA 14	-696	-3	4848	-3.88	-29	0.02
363	SLE RA 15	-696	-3	4851	-3.89	-29.01	0.02
363	SLE RA 16	-691	-3	4823	-3.85	-28.79	0.02
363	SLE RA 17	-691	-3	4825	-3.86	-28.8	0.02
363	SLE RA 18	-698	-3	4901	-3.78	-29.08	0.02
363	SLE RA 19	-698	-3	4903	-3.79	-29.09	0.02
363	SLE RA 20	-707	-3	4950	-3.86	-29.46	0.02
363	SLE RA 21	-707	-3	4952	-3.87	-29.47	0.02
363	SLE FR 1	-615	-3	4315	-3.46	-25.6	0.02
363	SLE FR 2	-615	-3	4316	-3.46	-25.6	0.02
363	SLE FR 3	-619	-3	4335	-3.49	-25.75	0.02
363	SLE FR 4	-640	-3	4492	-3.56	-26.65	0.02
363	SLE FR 5	-643	-3	4510	-3.59	-26.79	0.02
363	SLE FR 6	-656	-3	4608	-3.62	-27.34	0.02
363	SLE QP 1	-615	-3	4315	-3.46	-25.6	0.02
363	SLE QP 2	-640	-3	4491	-3.55	-26.64	0.02
363	SLD 1	521	5	3873	1.57	23.83	0.04
363	SLD 2	521	5	3873	1.57	23.83	0.04
363	SLD 3	436	0	4454	-3.44	20.42	0.02
363	SLD 4	436	0	4454	-3.44	20.42	0.02
363	SLD 5	-162	7	3425	5.58	-6.33	0.06
363	SLD 6	-162	7	3425	5.58	-6.33	0.06
363	SLD 7	-447	-10	5361	-11.12	-17.69	-0.02
363	SLD 8	-447	-10	5361	-11.12	-17.69	-0.02
363	SLD 9	-833	4	3621	4.01	-35.59	0.06
363	SLD 10	-833	4	3621	4.01	-35.59	0.06
363	SLD 11	-1118	-13	5557	-12.69	-46.95	-0.03
363	SLD 12	-1118	-13	5557	-12.69	-46.95	-0.03
363	SLD 13	-1715	-5	4528	-3.67	-73.7	0.02
363	SLD 14	-1715	-5	4528	-3.67	-73.7	0.02
363	SLD 15	-1801	-10	5108	-8.68	-77.11	-0.01
363	SLD 16	-1801	-10	5108	-8.68	-77.11	-0.01
363	SLV 1	2005	15	3057	8.49	88.31	0.08
363	SLV 2	2005	15	3057	8.49	88.31	0.08
363	SLV 3	1800	3	4441	-3.4	80.11	0.01
363	SLV 4	1800	3	4441	-3.4	80.11	0.01
363	SLV 5	466	20	1962	18.09	20.28	0.13
363	SLV 6	466	20	1962	18.09	20.28	0.13
363	SLV 7	-220	-19	6574	-21.54	-7.05	-0.08
363	SLV 8	-220	-19	6574	-21.54	-7.05	-0.08
363	SLV 9	-1060	13	2407	14.44	-46.23	0.11
363	SLV 10	-1060	13	2407	14.44	-46.23	0.11
363	SLV 11	-1745	-26	7019	-25.2	-73.57	-0.09
363	SLV 12	-1745	-26	7019	-25.2	-73.57	-0.09
363	SLV 13	-3079	-9	4541	-3.71	-133.4	0.02
363	SLV 14	-3079	-9	4541	-3.71	-133.4	0.02
363	SLV 15	-3285	-21	5925	-15.6	-141.6	-0.04
363	SLV 16	-3285	-21	5925	-15.6	-141.6	-0.04
364	SLU 1	-722	10	3895	-8.73	-29.93	-0.03
364	SLU 2	-723	10	3902	-8.76	-29.96	-0.03
364	SLU 3	-748	10	3998	-9.1	-31	-0.03
364	SLU 4	-748	10	4002	-9.12	-31.02	-0.03
364	SLU 5	-740	10	3969	-9.03	-30.66	-0.03
364	SLU 6	-765	11	4065	-9.36	-31.7	-0.03
364	SLU 7	-765	11	4069	-9.38	-31.71	-0.03
364	SLU 8	-756	11	4031	-9.26	-31.32	-0.03
364	SLU 9	-756	11	4034	-9.28	-31.34	-0.03
364	SLU 10	-833	11	4482	-9.81	-34.54	-0.03
364	SLU 11	-858	12	4578	-10.14	-35.58	-0.03
364	SLU 12	-858	12	4581	-10.16	-35.6	-0.03
364	SLU 13	-850	12	4549	-10.07	-35.23	-0.03
364	SLU 14	-875	12	4645	-10.41	-36.27	-0.03
364	SLU 15	-875	12	4649	-10.43	-36.29	-0.03
364	SLU 16	-866	12	4610	-10.3	-35.9	-0.03
364	SLU 17	-866	12	4614	-10.32	-35.91	-0.03
364	SLU 18	-879	12	4724	-10.22	-36.47	-0.03
364	SLU 19	-880	12	4727	-10.24	-36.49	-0.03
364	SLU 20	-896	12	4791	-10.48	-37.16	-0.03
364	SLU 21	-897	12	4795	-10.5	-37.18	-0.03
364	SLU 22	-828	11	4422	-9.81	-34.33	-0.03
364	SLU 23	-829	11	4428	-9.84	-34.36	-0.03
364	SLU 24	-854	12	4524	-10.18	-35.39	-0.03
364	SLU 25	-854	12	4528	-10.2	-35.41	-0.03
364	SLU 26	-845	12	4496	-10.1	-35.05	-0.03
364	SLU 27	-870	12	4592	-10.44	-36.09	-0.03
364	SLU 28	-871	12	4596	-10.46	-36.11	-0.03
364	SLU 29	-861	12	4557	-10.34	-35.71	-0.03
364	SLU 30	-862	12	4561	-10.36	-35.73	-0.03
364	SLU 31	-939	12	5008	-10.88	-38.93	-0.03
364	SLU 32	-964	13	5104	-11.22	-39.97	-0.03
364	SLU 33	-964	13	5108	-11.24	-39.99	-0.03
364	SLU 34	-955	13	5076	-11.15	-39.62	-0.03
364	SLU 35	-981	13	5172	-11.49	-40.66	-0.03
364	SLU 36	-981	13	5175	-11.51	-40.68	-0.03
364	SLU 37	-971	13	5137	-11.38	-40.29	-0.03
364	SLU 38	-972	13	5140	-11.4	-40.31	-0.03
364	SLU 39	-985	13	5250	-11.3	-40.86	-0.03
364	SLU 40	-986	13	5254	-11.32	-40.88	-0.03
364	SLU 41	-1002	13	5318	-11.56	-41.56	-0.03
364	SLU 42	-1002	13	5321	-11.58	-41.57	-0.03
364	SLU 43	-903	13	4884	-10.98	-37.41	-0.03

Nodo	Cont.	Reazione a traslazione			Reazione a rotazione		
Ind.	N.br.	x	y	z	x	y	z
364	SLU 44	-903	13	4890	-11.01	-37.44	-0.03
364	SLU 45	-928	13	4986	-11.35	-38.48	-0.03
364	SLU 46	-929	13	4990	-11.37	-38.49	-0.03
364	SLU 47	-920	13	4958	-11.27	-38.13	-0.03
364	SLU 48	-945	13	5054	-11.61	-39.17	-0.03
364	SLU 49	-945	13	5058	-11.63	-39.19	-0.03
364	SLU 50	-936	13	5019	-11.51	-38.79	-0.03
364	SLU 51	-936	13	5023	-11.53	-38.81	-0.03
364	SLU 52	-1013	14	5470	-12.05	-42.01	-0.04
364	SLU 53	-1038	14	5566	-12.39	-43.05	-0.04
364	SLU 54	-1039	14	5570	-12.41	-43.07	-0.04
364	SLU 55	-1030	14	5537	-12.32	-42.71	-0.04
364	SLU 56	-1055	15	5633	-12.66	-43.75	-0.04
364	SLU 57	-1056	15	5637	-12.68	-43.76	-0.04
364	SLU 58	-1046	14	5598	-12.55	-43.37	-0.04
364	SLU 59	-1047	14	5602	-12.57	-43.39	-0.04
364	SLU 60	-1060	14	5712	-12.47	-43.94	-0.04
364	SLU 61	-1060	14	5716	-12.49	-43.96	-0.04
364	SLU 62	-1077	15	5779	-12.73	-44.64	-0.04
364	SLU 63	-1077	15	5783	-12.75	-44.66	-0.04
364	SLU 64	-1008	14	5410	-12.06	-41.8	-0.04
364	SLU 65	-1009	14	5417	-12.09	-41.83	-0.04
364	SLU 66	-1034	14	5513	-12.43	-42.87	-0.04
364	SLU 67	-1035	14	5516	-12.45	-42.89	-0.04
364	SLU 68	-1026	14	5484	-12.35	-42.52	-0.04
364	SLU 69	-1051	15	5580	-12.69	-43.56	-0.04
364	SLU 70	-1051	15	5584	-12.71	-43.58	-0.04
364	SLU 71	-1042	14	5545	-12.58	-43.19	-0.04
364	SLU 72	-1042	14	5549	-12.6	-43.2	-0.04
364	SLU 73	-1119	15	5996	-13.13	-46.41	-0.04
364	SLU 74	-1144	15	6092	-13.47	-47.44	-0.04
364	SLU 75	-1145	15	6096	-13.49	-47.46	-0.04
364	SLU 76	-1136	15	6064	-13.4	-47.1	-0.04
364	SLU 77	-1161	16	6160	-13.74	-48.14	-0.04
364	SLU 78	-1161	16	6164	-13.76	-48.16	-0.04
364	SLU 79	-1152	16	6125	-13.63	-47.76	-0.04
364	SLU 80	-1152	16	6129	-13.65	-47.78	-0.04
364	SLU 81	-1166	15	6238	-13.55	-48.34	-0.04
364	SLU 82	-1166	16	6242	-13.57	-48.35	-0.04
364	SLU 83	-1182	16	6306	-13.81	-49.03	-0.04
364	SLU 84	-1183	16	6310	-13.83	-49.05	-0.04
364	SLE RA 1	-752	10	4046	-9.04	-31.19	-0.03
364	SLE RA 2	-753	10	4050	-9.06	-31.21	-0.03
364	SLE RA 3	-770	11	4114	-9.29	-31.9	-0.03
364	SLE RA 4	-770	11	4117	-9.3	-31.91	-0.03
364	SLE RA 5	-764	11	4095	-9.24	-31.67	-0.03
364	SLE RA 6	-781	11	4159	-9.46	-32.36	-0.03
364	SLE RA 7	-781	11	4162	-9.47	-32.37	-0.03
364	SLE RA 8	-775	11	4136	-9.39	-32.11	-0.03
364	SLE RA 9	-775	11	4139	-9.4	-32.12	-0.03
364	SLE RA 10	-826	11	4437	-9.76	-34.26	-0.03
364	SLE RA 11	-843	11	4501	-9.98	-34.95	-0.03
364	SLE RA 12	-843	11	4503	-9.99	-34.96	-0.03
364	SLE RA 13	-837	11	4482	-9.93	-34.72	-0.03
364	SLE RA 14	-854	12	4546	-10.16	-35.41	-0.03
364	SLE RA 15	-854	12	4548	-10.17	-35.43	-0.03
364	SLE RA 16	-848	12	4522	-10.09	-35.16	-0.03
364	SLE RA 17	-848	12	4525	-10.1	-35.17	-0.03
364	SLE RA 18	-857	11	4598	-10.03	-35.55	-0.03
364	SLE RA 19	-858	11	4601	-10.04	-35.56	-0.03
364	SLE RA 20	-868	12	4643	-10.21	-36.01	-0.03
364	SLE RA 21	-869	12	4646	-10.22	-36.02	-0.03
364	SLE FR 1	-752	10	4046	-9.04	-31.19	-0.03
364	SLE FR 2	-753	10	4047	-9.04	-31.19	-0.03
364	SLE FR 3	-757	10	4064	-9.11	-31.37	-0.03
364	SLE FR 4	-784	11	4212	-9.34	-32.5	-0.03
364	SLE FR 5	-788	11	4230	-9.41	-32.68	-0.03
364	SLE FR 6	-805	11	4322	-9.53	-33.37	-0.03
364	SLE QP 1	-752	10	4046	-9.04	-31.19	-0.03
364	SLE QP 2	-784	11	4212	-9.34	-32.5	-0.03
364	SLD 1	433	3	3567	-1.48	21.06	0
364	SLD 2	433	3	3567	-1.48	21.06	0
364	SLD 3	330	8	4102	-11.03	16.89	-0.01
364	SLD 4	330	8	4102	-11.03	16.89	-0.01
364	SLD 5	-262	1	3206	7.5	-10.1	0
364	SLD 6	-262	1	3206	7.5	-10.1	0
364	SLD 7	-606	17	4991	-24.32	-24.01	-0.05
364	SLD 8	-606	17	4991	-24.32	-24.01	-0.05
364	SLD 9	-962	5	3432	5.65	-40.98	-0.01
364	SLD 10	-962	5	3432	5.65	-40.98	-0.01
364	SLD 11	-1305	20	5217	-26.17	-54.89	-0.06
364	SLD 12	-1305	20	5217	-26.17	-54.89	-0.06
364	SLD 13	-1898	14	4321	-7.64	-81.88	-0.04
364	SLD 14	-1898	14	4321	-7.64	-81.88	-0.04
364	SLD 15	-2001	18	4856	-17.19	-86.05	-0.06
364	SLD 16	-2001	18	4856	-17.19	-86.05	-0.06
364	SLV 1	1989	-7	2720	9.14	89.49	0.04
364	SLV 2	1989	-7	2720	9.14	89.49	0.04
364	SLV 3	1742	3	3995	-13.42	79.49	0
364	SLV 4	1742	3	3995	-13.42	79.49	0
364	SLV 5	423	-11	1830	30.44	19.27	0.04

Nodo	Cont.	Reazione a traslazione			Reazione a rotazione		
Ind.	N.br.	x	y	z	x	y	z
364	SLV 6	423	-11	1830	30.44	19.27	0.04
364	SLV 7	-401	25	6081	-44.79	-14.07	-0.07
364	SLV 8	-401	25	6081	-44.79	-14.07	-0.07
364	SLV 9	-1167	-4	2343	26.12	-50.92	0.02
364	SLV 10	-1167	-4	2343	26.12	-50.92	0.02
364	SLV 11	-1990	33	6593	-49.11	-84.27	-0.1
364	SLV 12	-1990	33	6593	-49.11	-84.27	-0.1
364	SLV 13	-3310	18	4428	-5.25	-144.48	-0.06
364	SLV 14	-3310	18	4428	-5.25	-144.48	-0.06
364	SLV 15	-3557	29	5703	-27.81	-154.49	-0.09
364	SLV 16	-3557	29	5703	-27.81	-154.49	-0.09
365	SLU 1	-799	18	3587	-13.1	-33.53	-0.08
365	SLU 2	-800	18	3593	-13.15	-33.56	-0.08
365	SLU 3	-828	18	3679	-13.64	-34.72	-0.08
365	SLU 4	-828	18	3682	-13.67	-34.74	-0.08
365	SLU 5	-819	18	3654	-13.52	-34.34	-0.08
365	SLU 6	-846	19	3739	-14.02	-35.5	-0.08
365	SLU 7	-847	19	3743	-14.04	-35.52	-0.08
365	SLU 8	-836	19	3708	-13.85	-35.09	-0.08
365	SLU 9	-837	19	3712	-13.88	-35.1	-0.08
365	SLU 10	-925	20	4128	-14.77	-38.84	-0.09
365	SLU 11	-953	20	4213	-15.26	-40	-0.09
365	SLU 12	-953	21	4217	-15.29	-40.01	-0.09
365	SLU 13	-944	20	4188	-15.14	-39.61	-0.09
365	SLU 14	-972	21	4274	-15.63	-40.77	-0.09
365	SLU 15	-972	21	4277	-15.66	-40.79	-0.09
365	SLU 16	-962	21	4243	-15.47	-40.36	-0.09
365	SLU 17	-962	21	4246	-15.5	-40.38	-0.09
365	SLU 18	-978	21	4351	-15.42	-41.07	-0.09
365	SLU 19	-979	21	4354	-15.44	-41.08	-0.09
365	SLU 20	-997	21	4411	-15.79	-41.84	-0.1
365	SLU 21	-997	21	4415	-15.82	-41.86	-0.1
365	SLU 22	-919	20	4069	-14.77	-38.54	-0.09
365	SLU 23	-919	20	4076	-14.82	-38.57	-0.09
365	SLU 24	-947	21	4161	-15.31	-39.73	-0.09
365	SLU 25	-947	21	4165	-15.34	-39.75	-0.09
365	SLU 26	-938	20	4136	-15.19	-39.35	-0.09
365	SLU 27	-965	21	4221	-15.68	-40.51	-0.09
365	SLU 28	-966	21	4225	-15.71	-40.53	-0.09
365	SLU 29	-956	21	4190	-15.52	-40.1	-0.09
365	SLU 30	-956	21	4194	-15.55	-40.12	-0.09
365	SLU 31	-1045	22	4610	-16.44	-43.85	-0.1
365	SLU 32	-1072	23	4696	-16.93	-45.01	-0.1
365	SLU 33	-1073	23	4699	-16.96	-45.03	-0.1
365	SLU 34	-1063	23	4671	-16.81	-44.63	-0.1
365	SLU 35	-1091	23	4756	-17.3	-45.79	-0.1
365	SLU 36	-1091	23	4760	-17.33	-45.8	-0.1
365	SLU 37	-1081	23	4725	-17.14	-45.37	-0.1
365	SLU 38	-1081	23	4729	-17.17	-45.39	-0.1
365	SLU 39	-1098	23	4833	-17.09	-46.08	-0.1
365	SLU 40	-1098	23	4837	-17.11	-46.1	-0.1
365	SLU 41	-1116	23	4893	-17.46	-46.86	-0.11
365	SLU 42	-1117	24	4897	-17.49	-46.87	-0.11
365	SLU 43	-998	22	4498	-16.46	-41.87	-0.1
365	SLU 44	-999	22	4504	-16.51	-41.9	-0.1
365	SLU 45	-1027	23	4589	-17	-43.06	-0.1
365	SLU 46	-1027	23	4593	-17.03	-43.08	-0.1
365	SLU 47	-1017	23	4564	-16.88	-42.68	-0.1
365	SLU 48	-1045	23	4650	-17.38	-43.84	-0.1
365	SLU 49	-1046	23	4654	-17.4	-43.86	-0.1
365	SLU 50	-1035	23	4619	-17.21	-43.43	-0.1
365	SLU 51	-1036	23	4622	-17.24	-43.45	-0.1
365	SLU 52	-1124	24	5038	-18.13	-47.18	-0.11
365	SLU 53	-1152	25	5124	-18.62	-48.34	-0.11
365	SLU 54	-1152	25	5128	-18.65	-48.35	-0.11
365	SLU 55	-1143	25	5099	-18.5	-47.95	-0.11
365	SLU 56	-1170	25	5184	-18.99	-49.11	-0.11
365	SLU 57	-1171	26	5188	-19.02	-49.13	-0.11
365	SLU 58	-1161	25	5153	-18.83	-48.7	-0.11
365	SLU 59	-1161	25	5157	-18.86	-48.72	-0.11
365	SLU 60	-1177	25	5261	-18.78	-49.41	-0.11
365	SLU 61	-1178	25	5265	-18.8	-49.42	-0.11
365	SLU 62	-1196	26	5322	-19.15	-50.18	-0.12
365	SLU 63	-1196	26	5326	-19.18	-50.2	-0.12
365	SLU 64	-1117	24	4980	-18.13	-46.89	-0.11
365	SLU 65	-1118	24	4986	-18.18	-46.92	-0.11
365	SLU 66	-1146	25	5072	-18.67	-48.08	-0.11
365	SLU 67	-1146	25	5075	-18.7	-48.09	-0.11
365	SLU 68	-1137	25	5047	-18.55	-47.69	-0.11
365	SLU 69	-1164	26	5132	-19.04	-48.85	-0.11
365	SLU 70	-1165	26	5136	-19.07	-48.87	-0.11
365	SLU 71	-1155	25	5101	-18.88	-48.44	-0.11
365	SLU 72	-1155	25	5105	-18.91	-48.46	-0.11
365	SLU 73	-1243	27	5521	-19.8	-52.19	-0.12
365	SLU 74	-1271	27	5606	-20.29	-53.35	-0.12
365	SLU 75	-1272	27	5610	-20.32	-53.37	-0.12
365	SLU 76	-1262	27	5581	-20.17	-52.97	-0.12
365	SLU 77	-1290	28	5667	-20.66	-54.13	-0.12
365	SLU 78	-1290	28	5670	-20.69	-54.15	-0.12
365	SLU 79	-1280	28	5636	-20.5	-53.71	-0.12
365	SLU 80	-1280	28	5639	-20.52	-53.73	-0.12

Nodo	Cont.	Reazione a traslazione			Reazione a rotazione		
Ind.	N.br.	x	y	z	x	y	z
365	SLU 81	-1296	27	5744	-20.44	-54.42	-0.12
365	SLU 82	-1297	28	5747	-20.47	-54.44	-0.12
365	SLU 83	-1315	28	5804	-20.82	-55.2	-0.13
365	SLU 84	-1315	28	5808	-20.85	-55.22	-0.13
365	SLE RA 1	-833	18	3725	-13.58	-34.96	-0.08
365	SLE RA 2	-834	18	3729	-13.61	-34.98	-0.08
365	SLE RA 3	-852	19	3786	-13.94	-35.76	-0.08
365	SLE RA 4	-853	19	3788	-13.96	-35.77	-0.08
365	SLE RA 5	-846	19	3769	-13.86	-35.5	-0.08
365	SLE RA 6	-865	19	3826	-14.19	-36.28	-0.09
365	SLE RA 7	-865	19	3829	-14.21	-36.29	-0.09
365	SLE RA 8	-858	19	3805	-14.08	-36	-0.08
365	SLE RA 9	-858	19	3808	-14.1	-36.01	-0.08
365	SLE RA 10	-917	20	4085	-14.69	-38.5	-0.09
365	SLE RA 11	-936	20	4142	-15.02	-39.27	-0.09
365	SLE RA 12	-936	20	4145	-15.04	-39.29	-0.09
365	SLE RA 13	-930	20	4126	-14.94	-39.02	-0.09
365	SLE RA 14	-948	20	4183	-15.27	-39.79	-0.09
365	SLE RA 15	-948	21	4185	-15.29	-39.8	-0.09
365	SLE RA 16	-942	20	4162	-15.16	-39.52	-0.09
365	SLE RA 17	-942	20	4164	-15.18	-39.53	-0.09
365	SLE RA 18	-953	20	4234	-15.12	-39.99	-0.09
365	SLE RA 19	-953	20	4236	-15.14	-40	-0.09
365	SLE RA 20	-965	21	4274	-15.37	-40.51	-0.09
365	SLE RA 21	-965	21	4277	-15.39	-40.52	-0.09
365	SLE FR 1	-833	18	3725	-13.58	-34.96	-0.08
365	SLE FR 2	-833	18	3726	-13.59	-34.97	-0.08
365	SLE FR 3	-838	18	3741	-13.68	-35.17	-0.08
365	SLE FR 4	-869	19	3878	-14.05	-36.48	-0.08
365	SLE FR 5	-874	19	3894	-14.14	-36.68	-0.08
365	SLE FR 6	-893	19	3979	-14.35	-37.48	-0.09
365	SLE QP 1	-833	18	3725	-13.58	-34.96	-0.08
365	SLE QP 2	-869	19	3877	-14.04	-36.47	-0.08
365	SLD 1	393	8	3243	-3.73	18.55	-0.03
365	SLD 2	393	8	3243	-3.73	18.55	-0.03
365	SLD 3	286	20	3746	-18.31	14.23	-0.07
365	SLD 4	286	20	3746	-18.31	14.23	-0.07
365	SLD 5	-329	-1	2923	11.16	-13.41	-0.01
365	SLD 6	-329	-1	2923	11.16	-13.41	-0.01
365	SLD 7	-684	36	4602	-37.43	-27.81	-0.14
365	SLD 8	-684	36	4602	-37.43	-27.81	-0.14
365	SLD 9	-1054	2	3153	9.34	-45.13	-0.03
365	SLD 10	-1054	2	3153	9.34	-45.13	-0.03
365	SLD 11	-1409	39	4831	-39.25	-59.53	-0.16
365	SLD 12	-1409	39	4831	-39.25	-59.53	-0.16
365	SLD 13	-2025	18	4008	-9.78	-87.17	-0.1
365	SLD 14	-2025	18	4008	-9.78	-87.17	-0.1
365	SLD 15	-2131	29	4512	-24.36	-91.49	-0.13
365	SLD 16	-2131	29	4512	-24.36	-91.49	-0.13
365	SLV 1	2006	-6	2411	10.28	88.85	0.03
365	SLV 2	2006	-6	2411	10.28	88.85	0.03
365	SLV 3	1751	21	3609	-24.13	78.48	-0.06
365	SLV 4	1751	21	3609	-24.13	78.48	-0.06
365	SLV 5	380	-29	1621	45.45	16.84	0.08
365	SLV 6	380	-29	1621	45.45	16.84	0.08
365	SLV 7	-470	60	5613	-69.27	-17.71	-0.21
365	SLV 8	-470	60	5613	-69.27	-17.71	-0.21
365	SLV 9	-1268	-22	2142	41.18	-55.24	0.04
365	SLV 10	-1268	-22	2142	41.18	-55.24	0.04
365	SLV 11	-2119	66	6134	-73.54	-89.79	-0.25
365	SLV 12	-2119	66	6134	-73.54	-89.79	-0.25
365	SLV 13	-3489	17	4146	-3.96	-151.42	-0.11
365	SLV 14	-3489	17	4146	-3.96	-151.42	-0.11
365	SLV 15	-3744	43	5344	-38.37	-161.79	-0.2
365	SLV 16	-3744	43	5344	-38.37	-161.79	-0.2
366	SLU 1	-799	20	3288	-16.04	-33.84	-0.12
366	SLU 2	-799	21	3294	-16.09	-33.86	-0.12
366	SLU 3	-827	21	3369	-16.68	-35.04	-0.12
366	SLU 4	-827	21	3373	-16.72	-35.05	-0.12
366	SLU 5	-818	21	3348	-16.54	-34.65	-0.12
366	SLU 6	-846	22	3423	-17.13	-35.82	-0.13
366	SLU 7	-846	22	3426	-17.17	-35.84	-0.13
366	SLU 8	-836	22	3395	-16.92	-35.41	-0.12
366	SLU 9	-836	22	3399	-16.96	-35.42	-0.12
366	SLU 10	-927	23	3783	-18.1	-39.28	-0.13
366	SLU 11	-954	24	3858	-18.69	-40.45	-0.14
366	SLU 12	-955	24	3862	-18.72	-40.47	-0.14
366	SLU 13	-945	24	3837	-18.54	-40.06	-0.14
366	SLU 14	-973	24	3912	-19.13	-41.24	-0.14
366	SLU 15	-973	24	3916	-19.17	-41.25	-0.14
366	SLU 16	-963	24	3884	-18.93	-40.82	-0.14
366	SLU 17	-963	24	3888	-18.96	-40.84	-0.14
366	SLU 18	-981	24	3987	-18.9	-41.57	-0.14
366	SLU 19	-981	24	3991	-18.93	-41.59	-0.14
366	SLU 20	-999	25	4041	-19.34	-42.36	-0.14
366	SLU 21	-1000	25	4044	-19.38	-42.37	-0.14
366	SLU 22	-919	23	3726	-18.1	-38.96	-0.13
366	SLU 23	-920	23	3733	-18.16	-38.98	-0.13
366	SLU 24	-948	24	3808	-18.75	-40.16	-0.14
366	SLU 25	-948	24	3811	-18.78	-40.17	-0.14
366	SLU 26	-938	24	3786	-18.6	-39.76	-0.14

Nodo	Cont.	Reazione a traslazione			Reazione a rotazione		
Ind.	N.br.	x	y	z	x	y	z
366	SLU 27	-966	24	3861	-19.19	-40.94	-0.14
366	SLU 28	-966	25	3865	-19.23	-40.95	-0.14
366	SLU 29	-956	24	3834	-18.99	-40.53	-0.14
366	SLU 30	-957	24	3838	-19.02	-40.54	-0.14
366	SLU 31	-1047	26	4222	-20.16	-44.39	-0.15
366	SLU 32	-1075	27	4297	-20.75	-45.57	-0.15
366	SLU 33	-1075	27	4301	-20.79	-45.58	-0.15
366	SLU 34	-1066	26	4276	-20.6	-45.18	-0.15
366	SLU 35	-1094	27	4351	-21.19	-46.36	-0.16
366	SLU 36	-1094	27	4354	-21.23	-46.37	-0.16
366	SLU 37	-1084	27	4323	-20.99	-45.94	-0.15
366	SLU 38	-1084	27	4327	-21.03	-45.96	-0.15
366	SLU 39	-1101	27	4426	-20.96	-46.69	-0.15
366	SLU 40	-1102	27	4429	-20.99	-46.71	-0.15
366	SLU 41	-1120	27	4479	-21.4	-47.48	-0.16
366	SLU 42	-1120	27	4483	-21.44	-47.49	-0.16
366	SLU 43	-997	26	4124	-20.14	-42.24	-0.15
366	SLU 44	-997	26	4130	-20.2	-42.26	-0.15
366	SLU 45	-1025	26	4205	-20.79	-43.43	-0.15
366	SLU 46	-1026	27	4208	-20.82	-43.45	-0.15
366	SLU 47	-1016	26	4183	-20.64	-43.04	-0.15
366	SLU 48	-1044	27	4258	-21.23	-44.22	-0.16
366	SLU 49	-1044	27	4262	-21.27	-44.23	-0.16
366	SLU 50	-1034	27	4231	-21.03	-43.81	-0.15
366	SLU 51	-1034	27	4235	-21.06	-43.82	-0.15
366	SLU 52	-1125	28	4619	-22.2	-47.67	-0.16
366	SLU 53	-1153	29	4694	-22.79	-48.85	-0.17
366	SLU 54	-1153	29	4698	-22.83	-48.86	-0.17
366	SLU 55	-1143	29	4673	-22.64	-48.46	-0.17
366	SLU 56	-1171	30	4748	-23.23	-49.63	-0.17
366	SLU 57	-1172	30	4752	-23.27	-49.65	-0.17
366	SLU 58	-1161	29	4720	-23.03	-49.22	-0.17
366	SLU 59	-1162	29	4724	-23.06	-49.23	-0.17
366	SLU 60	-1179	29	4823	-23	-49.97	-0.17
366	SLU 61	-1179	29	4826	-23.03	-49.98	-0.17
366	SLU 62	-1198	30	4876	-23.44	-50.76	-0.17
366	SLU 63	-1198	30	4880	-23.48	-50.77	-0.17
366	SLU 64	-1118	28	4562	-22.2	-47.35	-0.16
366	SLU 65	-1118	28	4568	-22.26	-47.38	-0.16
366	SLU 66	-1146	29	4643	-22.85	-48.55	-0.17
366	SLU 67	-1146	29	4647	-22.89	-48.57	-0.17
366	SLU 68	-1137	29	4622	-22.71	-48.16	-0.17
366	SLU 69	-1164	30	4697	-23.3	-49.34	-0.17
366	SLU 70	-1165	30	4701	-23.33	-49.35	-0.17
366	SLU 71	-1155	29	4670	-23.09	-48.92	-0.17
366	SLU 72	-1155	29	4673	-23.13	-48.94	-0.17
366	SLU 73	-1245	31	5058	-24.26	-52.79	-0.18
366	SLU 74	-1273	32	5133	-24.85	-53.97	-0.18
366	SLU 75	-1274	32	5137	-24.89	-53.98	-0.18
366	SLU 76	-1264	32	5112	-24.71	-53.58	-0.18
366	SLU 77	-1292	32	5187	-25.3	-54.75	-0.19
366	SLU 78	-1292	32	5190	-25.33	-54.77	-0.19
366	SLU 79	-1282	32	5159	-25.09	-54.34	-0.18
366	SLU 80	-1282	32	5163	-25.13	-54.35	-0.19
366	SLU 81	-1300	32	5261	-25.06	-55.09	-0.18
366	SLU 82	-1300	32	5265	-25.1	-55.1	-0.19
366	SLU 83	-1318	33	5315	-25.51	-55.87	-0.19
366	SLU 84	-1318	33	5319	-25.54	-55.89	-0.19
366	SLE RA 1	-833	21	3413	-16.63	-35.3	-0.12
366	SLE RA 2	-833	21	3417	-16.66	-35.32	-0.12
366	SLE RA 3	-852	22	3467	-17.06	-36.1	-0.13
366	SLE RA 4	-852	22	3470	-17.08	-36.11	-0.13
366	SLE RA 5	-846	22	3453	-16.96	-35.84	-0.12
366	SLE RA 6	-864	22	3503	-17.35	-36.62	-0.13
366	SLE RA 7	-865	22	3505	-17.38	-36.63	-0.13
366	SLE RA 8	-858	22	3485	-17.22	-36.35	-0.13
366	SLE RA 9	-858	22	3487	-17.24	-36.36	-0.13
366	SLE RA 10	-918	23	3743	-18	-38.93	-0.13
366	SLE RA 11	-937	23	3793	-18.39	-39.71	-0.14
366	SLE RA 12	-937	23	3796	-18.42	-39.72	-0.14
366	SLE RA 13	-931	23	3779	-18.3	-39.45	-0.13
366	SLE RA 14	-949	24	3829	-18.69	-40.23	-0.14
366	SLE RA 15	-950	24	3832	-18.71	-40.24	-0.14
366	SLE RA 16	-943	24	3811	-18.55	-39.96	-0.14
366	SLE RA 17	-943	24	3813	-18.58	-39.97	-0.14
366	SLE RA 18	-955	24	3879	-18.53	-40.46	-0.14
366	SLE RA 19	-955	24	3882	-18.56	-40.47	-0.14
366	SLE RA 20	-967	24	3915	-18.83	-40.98	-0.14
366	SLE RA 21	-967	24	3917	-18.85	-40.99	-0.14
366	SLE FR 1	-833	21	3413	-16.63	-35.3	-0.12
366	SLE FR 2	-833	21	3414	-16.63	-35.3	-0.12
366	SLE FR 3	-838	21	3427	-16.74	-35.51	-0.12
366	SLE FR 4	-870	22	3554	-17.2	-36.85	-0.13
366	SLE FR 5	-875	22	3567	-17.32	-37.06	-0.13
366	SLE FR 6	-894	22	3646	-17.58	-37.88	-0.13
366	SLE QP 1	-833	21	3413	-16.63	-35.3	-0.12
366	SLE QP 2	-870	22	3553	-17.2	-36.85	-0.13
366	SLD 1	420	9	2968	-4.96	20.29	-0.06
366	SLD 2	420	9	2968	-4.96	20.29	-0.06
366	SLD 3	320	27	3448	-23.93	16.08	-0.15
366	SLD 4	320	27	3448	-23.93	16.08	-0.15

Nodo	Cont.	Reazione a traslazione			Reazione a rotazione		
Ind.	N.br.	x	y	z	x	y	z
366	SLD 5	-331	-8	2648	15.24	-13.32	0.03
366	SLD 6	-331	-8	2648	15.24	-13.32	0.03
366	SLD 7	-664	50	4251	-47.98	-27.35	-0.26
366	SLD 8	-664	50	4251	-47.98	-27.35	-0.26
366	SLD 9	-1075	-6	2855	13.59	-46.34	0.01
366	SLD 10	-1075	-6	2855	13.59	-46.34	0.01
366	SLD 11	-1408	52	4458	-49.64	-60.37	-0.28
366	SLD 12	-1408	52	4458	-49.64	-60.37	-0.28
366	SLD 13	-2060	17	3657	-10.46	-89.78	-0.11
366	SLD 14	-2060	17	3657	-10.46	-89.78	-0.11
366	SLD 15	-2159	34	4138	-29.43	-93.98	-0.19
366	SLD 16	-2159	34	4138	-29.43	-93.98	-0.19
366	SLV 1	2068	-7	2199	11.75	93.27	0.03
366	SLV 2	2068	-7	2199	11.75	93.27	0.03
366	SLV 3	1828	34	3342	-33	83.17	-0.17
366	SLV 4	1828	34	3342	-33	83.17	-0.17
366	SLV 5	376	-50	1414	59.36	17.51	0.23
366	SLV 6	376	-50	1414	59.36	17.51	0.23
366	SLV 7	-424	88	5222	-89.81	-16.17	-0.45
366	SLV 8	-424	88	5222	-89.81	-16.17	-0.45
366	SLV 9	-1315	-44	1884	55.42	-57.53	0.2
366	SLV 10	-1315	-44	1884	55.42	-57.53	0.2
366	SLV 11	-2115	93	5691	-93.76	-91.21	-0.49
366	SLV 12	-2115	93	5691	-93.76	-91.21	-0.49
366	SLV 13	-3567	10	3764	-1.39	-156.87	-0.08
366	SLV 14	-3567	10	3764	-1.39	-156.87	-0.08
366	SLV 15	-3807	51	4906	-46.15	-166.97	-0.28
366	SLV 16	-3807	51	4906	-46.15	-166.97	-0.28
367	SLU 1	-740	21	3067	-18.09	-31.8	-0.13
367	SLU 2	-740	21	3073	-18.16	-31.81	-0.13
367	SLU 3	-766	22	3140	-18.81	-32.92	-0.14
367	SLU 4	-766	22	3144	-18.85	-32.93	-0.14
367	SLU 5	-757	22	3122	-18.65	-32.55	-0.14
367	SLU 6	-783	23	3189	-19.3	-33.65	-0.14
367	SLU 7	-783	23	3193	-19.35	-33.66	-0.14
367	SLU 8	-774	22	3164	-19.07	-33.27	-0.14
367	SLU 9	-774	22	3168	-19.11	-33.28	-0.14
367	SLU 10	-860	24	3530	-20.44	-36.97	-0.15
367	SLU 11	-886	25	3597	-21.09	-38.07	-0.15
367	SLU 12	-886	25	3601	-21.13	-38.08	-0.15
367	SLU 13	-877	25	3579	-20.93	-37.7	-0.15
367	SLU 14	-903	25	3646	-21.58	-38.8	-0.16
367	SLU 15	-903	25	3649	-21.62	-38.81	-0.16
367	SLU 16	-894	25	3621	-21.35	-38.42	-0.16
367	SLU 17	-894	25	3625	-21.39	-38.43	-0.16
367	SLU 18	-911	25	3719	-21.34	-39.16	-0.16
367	SLU 19	-911	25	3723	-21.38	-39.17	-0.16
367	SLU 20	-928	26	3768	-21.83	-39.89	-0.16
367	SLU 21	-928	26	3772	-21.88	-39.9	-0.16
367	SLU 22	-853	24	3474	-20.43	-36.64	-0.15
367	SLU 23	-853	24	3480	-20.5	-36.66	-0.15
367	SLU 24	-879	25	3547	-21.16	-37.76	-0.15
367	SLU 25	-879	25	3551	-21.2	-37.77	-0.15
367	SLU 26	-870	25	3529	-21	-37.39	-0.15
367	SLU 27	-896	25	3596	-21.65	-38.5	-0.16
367	SLU 28	-896	26	3599	-21.69	-38.51	-0.16
367	SLU 29	-887	25	3571	-21.42	-38.11	-0.16
367	SLU 30	-887	25	3575	-21.46	-38.12	-0.16
367	SLU 31	-973	27	3937	-22.78	-41.81	-0.17
367	SLU 32	-998	28	4004	-23.43	-42.91	-0.17
367	SLU 33	-999	28	4008	-23.48	-42.92	-0.17
367	SLU 34	-990	27	3985	-23.27	-42.55	-0.17
367	SLU 35	-1015	28	4052	-23.93	-43.65	-0.17
367	SLU 36	-1016	28	4056	-23.97	-43.66	-0.17
367	SLU 37	-1006	28	4028	-23.69	-43.26	-0.17
367	SLU 38	-1007	28	4031	-23.74	-43.27	-0.17
367	SLU 39	-1024	28	4126	-23.69	-44	-0.17
367	SLU 40	-1024	28	4130	-23.73	-44.01	-0.17
367	SLU 41	-1041	28	4175	-24.18	-44.74	-0.18
367	SLU 42	-1041	28	4179	-24.22	-44.75	-0.18
367	SLU 43	-923	27	3848	-22.71	-39.68	-0.17
367	SLU 44	-924	27	3854	-22.78	-39.69	-0.17
367	SLU 45	-949	28	3921	-23.43	-40.8	-0.17
367	SLU 46	-950	28	3925	-23.47	-40.81	-0.17
367	SLU 47	-941	27	3903	-23.27	-40.43	-0.17
367	SLU 48	-966	28	3969	-23.92	-41.53	-0.17
367	SLU 49	-967	28	3973	-23.97	-41.54	-0.17
367	SLU 50	-957	28	3945	-23.69	-41.15	-0.17
367	SLU 51	-958	28	3949	-23.73	-41.16	-0.17
367	SLU 52	-1043	29	4311	-25.06	-44.85	-0.18
367	SLU 53	-1069	30	4378	-25.71	-45.95	-0.19
367	SLU 54	-1069	30	4381	-25.75	-45.96	-0.19
367	SLU 55	-1060	30	4359	-25.55	-45.58	-0.19
367	SLU 56	-1086	31	4426	-26.2	-46.68	-0.19
367	SLU 57	-1086	31	4430	-26.25	-46.69	-0.19
367	SLU 58	-1077	31	4401	-25.97	-46.3	-0.19
367	SLU 59	-1077	31	4405	-26.01	-46.31	-0.19
367	SLU 60	-1094	31	4500	-25.96	-47.04	-0.19
367	SLU 61	-1094	31	4504	-26	-47.05	-0.19
367	SLU 62	-1111	31	4549	-26.45	-47.77	-0.19
367	SLU 63	-1112	31	4553	-26.5	-47.78	-0.19

Nodo	Cont.	Reazione a traslazione			Reazione a rotazione		
Ind.	N.br.	x	y	z	x	y	z
367	SLU 64	-1036	29	4254	-25.05	-44.52	-0.18
367	SLU 65	-1036	30	4261	-25.12	-44.54	-0.18
367	SLU 66	-1062	30	4328	-25.78	-45.64	-0.19
367	SLU 67	-1062	30	4331	-25.82	-45.65	-0.19
367	SLU 68	-1053	30	4309	-25.62	-45.27	-0.19
367	SLU 69	-1079	31	4376	-26.27	-46.38	-0.19
367	SLU 70	-1079	31	4380	-26.31	-46.38	-0.19
367	SLU 71	-1070	31	4352	-26.04	-45.99	-0.19
367	SLU 72	-1070	31	4355	-26.08	-46	-0.19
367	SLU 73	-1156	32	4717	-27.4	-49.69	-0.2
367	SLU 74	-1182	33	4784	-28.06	-50.79	-0.2
367	SLU 75	-1182	33	4788	-28.1	-50.8	-0.2
367	SLU 76	-1173	33	4766	-27.89	-50.42	-0.2
367	SLU 77	-1199	34	4833	-28.55	-51.53	-0.21
367	SLU 78	-1199	34	4837	-28.59	-51.54	-0.21
367	SLU 79	-1190	33	4808	-28.32	-51.14	-0.21
367	SLU 80	-1190	33	4812	-28.36	-51.15	-0.21
367	SLU 81	-1207	33	4907	-28.31	-51.88	-0.21
367	SLU 82	-1207	33	4911	-28.35	-51.89	-0.21
367	SLU 83	-1224	34	4955	-28.8	-52.62	-0.21
367	SLU 84	-1224	34	4959	-28.84	-52.63	-0.21
367	SLE RA 1	-772	22	3183	-18.76	-33.18	-0.14
367	SLE RA 2	-772	22	3187	-18.8	-33.19	-0.14
367	SLE RA 3	-790	23	3232	-19.24	-33.93	-0.14
367	SLE RA 4	-790	23	3235	-19.27	-33.94	-0.14
367	SLE RA 5	-784	22	3220	-19.13	-33.68	-0.14
367	SLE RA 6	-801	23	3264	-19.57	-34.42	-0.14
367	SLE RA 7	-801	23	3267	-19.6	-34.42	-0.14
367	SLE RA 8	-795	23	3248	-19.41	-34.16	-0.14
367	SLE RA 9	-795	23	3251	-19.44	-34.17	-0.14
367	SLE RA 10	-852	24	3492	-20.32	-36.63	-0.15
367	SLE RA 11	-869	24	3537	-20.76	-37.36	-0.15
367	SLE RA 12	-869	24	3539	-20.79	-37.37	-0.15
367	SLE RA 13	-864	24	3524	-20.65	-37.12	-0.15
367	SLE RA 14	-881	25	3569	-21.09	-37.85	-0.15
367	SLE RA 15	-881	25	3571	-21.11	-37.86	-0.15
367	SLE RA 16	-875	25	3552	-20.93	-37.6	-0.15
367	SLE RA 17	-875	25	3555	-20.96	-37.6	-0.15
367	SLE RA 18	-886	25	3618	-20.93	-38.09	-0.15
367	SLE RA 19	-886	25	3621	-20.95	-38.1	-0.15
367	SLE RA 20	-897	25	3651	-21.25	-38.58	-0.15
367	SLE RA 21	-898	25	3653	-21.28	-38.59	-0.16
367	SLE FR 1	-772	22	3183	-18.76	-33.18	-0.14
367	SLE FR 2	-772	22	3184	-18.77	-33.19	-0.14
367	SLE FR 3	-777	22	3196	-18.89	-33.38	-0.14
367	SLE FR 4	-806	23	3315	-19.42	-34.66	-0.14
367	SLE FR 5	-811	23	3327	-19.54	-34.85	-0.14
367	SLE FR 6	-829	23	3401	-19.84	-35.64	-0.14
367	SLE QP 1	-772	22	3183	-18.76	-33.18	-0.14
367	SLE QP 2	-806	23	3314	-19.41	-34.66	-0.14
367	SLD 1	444	9	2779	-5.67	20.01	-0.06
367	SLD 2	444	9	2779	-5.67	20.01	-0.06
367	SLD 3	354	31	3234	-27.64	16.19	-0.19
367	SLD 4	354	31	3234	-27.64	16.19	-0.19
367	SLD 5	-296	-15	2463	18.03	-12.47	0.07
367	SLD 6	-296	-15	2463	18.03	-12.47	0.07
367	SLD 7	-593	58	3980	-55.19	-25.19	-0.34
367	SLD 8	-593	58	3980	-55.19	-25.19	-0.34
367	SLD 9	-1019	-13	2647	16.38	-44.12	0.06
367	SLD 10	-1019	-13	2647	16.38	-44.12	0.06
367	SLD 11	-1317	60	4165	-56.84	-56.84	-0.35
367	SLD 12	-1317	60	4165	-56.84	-56.84	-0.35
367	SLD 13	-1967	15	3393	-11.17	-85.5	-0.1
367	SLD 14	-1967	15	3393	-11.17	-85.5	-0.1
367	SLD 15	-2056	37	3849	-33.14	-89.32	-0.22
367	SLD 16	-2056	37	3849	-33.14	-89.32	-0.22
367	SLV 1	2040	-10	2076	13.15	89.83	0.04
367	SLV 2	2040	-10	2076	13.15	89.83	0.04
367	SLV 3	1825	42	3156	-38.67	80.64	-0.25
367	SLV 4	1825	42	3156	-38.67	80.64	-0.25
367	SLV 5	374	-65	1304	68.94	16.63	0.35
367	SLV 6	374	-65	1304	68.94	16.63	0.35
367	SLV 7	-343	107	4905	-103.77	-14.01	-0.61
367	SLV 8	-343	107	4905	-103.77	-14.01	-0.61
367	SLV 9	-1270	-61	1723	64.95	-55.3	0.32
367	SLV 10	-1270	-61	1723	64.95	-55.3	0.32
367	SLV 11	-1987	111	5323	-107.75	-85.94	-0.63
367	SLV 12	-1987	111	5323	-107.75	-85.94	-0.63
367	SLV 13	-3438	4	3471	-0.15	-149.95	-0.04
367	SLV 14	-3438	4	3471	-0.15	-149.95	-0.04
367	SLV 15	-3653	56	4551	-51.96	-159.14	-0.32
367	SLV 16	-3653	56	4551	-51.96	-159.14	-0.32
368	SLU 1	-660	22	2966	-20	-29.31	-0.14
368	SLU 2	-660	22	2972	-20.09	-29.32	-0.14
368	SLU 3	-683	23	3035	-20.79	-30.32	-0.15
368	SLU 4	-683	23	3039	-20.84	-30.33	-0.15
368	SLU 5	-675	23	3019	-20.62	-29.99	-0.15
368	SLU 6	-698	24	3081	-21.33	-30.99	-0.15
368	SLU 7	-698	24	3085	-21.38	-30.99	-0.15
368	SLU 8	-690	23	3058	-21.07	-30.64	-0.15
368	SLU 9	-690	24	3062	-21.12	-30.65	-0.15

Nodo	Cont.	Reazione a traslazione			Reazione a rotazione		
Ind.	N.br.	x	y	z	x	y	z
368	SLU 10	-768	25	3416	-22.64	-34.17	-0.16
368	SLU 11	-791	26	3479	-23.35	-35.17	-0.17
368	SLU 12	-791	26	3483	-23.4	-35.18	-0.17
368	SLU 13	-783	26	3462	-23.18	-34.83	-0.16
368	SLU 14	-806	27	3525	-23.89	-35.84	-0.17
368	SLU 15	-806	27	3529	-23.94	-35.84	-0.17
368	SLU 16	-798	26	3502	-23.63	-35.49	-0.17
368	SLU 17	-798	26	3506	-23.68	-35.49	-0.17
368	SLU 18	-814	26	3599	-23.65	-36.24	-0.17
368	SLU 19	-815	26	3603	-23.7	-36.24	-0.17
368	SLU 20	-829	27	3645	-24.19	-36.9	-0.17
368	SLU 21	-830	27	3650	-24.24	-36.91	-0.17
368	SLU 22	-761	25	3359	-22.62	-33.83	-0.16
368	SLU 23	-761	25	3365	-22.71	-33.84	-0.16
368	SLU 24	-784	26	3428	-23.41	-34.84	-0.17
368	SLU 25	-784	26	3432	-23.47	-34.85	-0.17
368	SLU 26	-776	26	3412	-23.24	-34.5	-0.16
368	SLU 27	-799	27	3474	-23.95	-35.51	-0.17
368	SLU 28	-799	27	3478	-24	-35.51	-0.17
368	SLU 29	-791	26	3451	-23.69	-35.16	-0.17
368	SLU 30	-791	26	3455	-23.75	-35.16	-0.17
368	SLU 31	-869	28	3809	-25.26	-38.69	-0.18
368	SLU 32	-892	29	3872	-25.97	-39.69	-0.18
368	SLU 33	-892	29	3876	-26.02	-39.69	-0.18
368	SLU 34	-884	29	3855	-25.8	-39.35	-0.18
368	SLU 35	-907	30	3918	-26.51	-40.35	-0.19
368	SLU 36	-907	30	3922	-26.56	-40.36	-0.19
368	SLU 37	-899	29	3895	-26.25	-40.01	-0.19
368	SLU 38	-899	29	3899	-26.3	-40.01	-0.19
368	SLU 39	-916	29	3992	-26.27	-40.75	-0.19
368	SLU 40	-916	29	3996	-26.33	-40.76	-0.19
368	SLU 41	-931	30	4039	-26.81	-41.42	-0.19
368	SLU 42	-931	30	4043	-26.86	-41.42	-0.19
368	SLU 43	-823	28	3721	-25.1	-36.56	-0.18
368	SLU 44	-823	28	3727	-25.19	-36.57	-0.18
368	SLU 45	-846	29	3790	-25.89	-37.57	-0.18
368	SLU 46	-846	29	3794	-25.95	-37.57	-0.18
368	SLU 47	-838	29	3774	-25.72	-37.23	-0.18
368	SLU 48	-861	29	3836	-26.43	-38.23	-0.19
368	SLU 49	-861	30	3840	-26.48	-38.24	-0.19
368	SLU 50	-853	29	3813	-26.17	-37.89	-0.19
368	SLU 51	-853	29	3817	-26.23	-37.89	-0.19
368	SLU 52	-931	31	4171	-27.74	-41.41	-0.2
368	SLU 53	-954	32	4234	-28.45	-42.42	-0.2
368	SLU 54	-954	32	4238	-28.5	-42.42	-0.2
368	SLU 55	-946	31	4217	-28.28	-42.08	-0.2
368	SLU 56	-969	32	4280	-28.99	-43.08	-0.21
368	SLU 57	-969	32	4284	-29.04	-43.09	-0.21
368	SLU 58	-961	32	4256	-28.73	-42.73	-0.2
368	SLU 59	-961	32	4261	-28.78	-42.74	-0.2
368	SLU 60	-978	32	4354	-28.75	-43.48	-0.2
368	SLU 61	-978	32	4358	-28.81	-43.49	-0.2
368	SLU 62	-993	33	4400	-29.29	-44.15	-0.21
368	SLU 63	-993	33	4404	-29.34	-44.15	-0.21
368	SLU 64	-924	31	4114	-27.72	-41.07	-0.2
368	SLU 65	-924	31	4120	-27.81	-41.08	-0.2
368	SLU 66	-947	32	4183	-28.52	-42.09	-0.2
368	SLU 67	-947	32	4187	-28.57	-42.09	-0.2
368	SLU 68	-939	32	4167	-28.34	-41.75	-0.2
368	SLU 69	-962	32	4229	-29.05	-42.75	-0.21
368	SLU 70	-962	32	4233	-29.1	-42.76	-0.21
368	SLU 71	-954	32	4206	-28.8	-42.4	-0.2
368	SLU 72	-954	32	4210	-28.85	-42.41	-0.2
368	SLU 73	-1033	34	4564	-30.37	-45.93	-0.22
368	SLU 74	-1055	35	4627	-31.07	-46.93	-0.22
368	SLU 75	-1055	35	4631	-31.12	-46.94	-0.22
368	SLU 76	-1048	34	4610	-30.9	-46.6	-0.22
368	SLU 77	-1070	35	4673	-31.61	-47.6	-0.22
368	SLU 78	-1070	35	4677	-31.66	-47.6	-0.22
368	SLU 79	-1062	35	4650	-31.35	-47.25	-0.22
368	SLU 80	-1063	35	4654	-31.4	-47.26	-0.22
368	SLU 81	-1079	35	4747	-31.38	-48	-0.22
368	SLU 82	-1079	35	4751	-31.43	-48.01	-0.22
368	SLU 83	-1094	36	4793	-31.91	-48.66	-0.23
368	SLU 84	-1094	36	4798	-31.96	-48.67	-0.23
368	SLE RA 1	-689	23	3078	-20.75	-30.6	-0.15
368	SLE RA 2	-689	23	3082	-20.81	-30.61	-0.15
368	SLE RA 3	-704	24	3124	-21.28	-31.28	-0.15
368	SLE RA 4	-704	24	3127	-21.31	-31.28	-0.15
368	SLE RA 5	-699	24	3113	-21.16	-31.05	-0.15
368	SLE RA 6	-714	24	3155	-21.64	-31.72	-0.15
368	SLE RA 7	-714	24	3158	-21.67	-31.72	-0.15
368	SLE RA 8	-709	24	3139	-21.46	-31.49	-0.15
368	SLE RA 9	-709	24	3142	-21.5	-31.49	-0.15
368	SLE RA 10	-761	25	3378	-22.51	-33.84	-0.16
368	SLE RA 11	-776	26	3420	-22.98	-34.51	-0.16
368	SLE RA 12	-776	26	3423	-23.02	-34.51	-0.16
368	SLE RA 13	-771	25	3409	-22.87	-34.28	-0.16
368	SLE RA 14	-786	26	3451	-23.34	-34.95	-0.17
368	SLE RA 15	-786	26	3453	-23.37	-34.96	-0.17
368	SLE RA 16	-781	26	3435	-23.17	-34.72	-0.16

Nodo	Cont.	Reazione a traslazione			Reazione a rotazione		
Ind.	N.br.	x	y	z	x	y	z
368	SLE RA 17	-781	26	3438	-23.2	-34.72	-0.16
368	SLE RA 18	-792	26	3500	-23.18	-35.22	-0.16
368	SLE RA 19	-792	26	3503	-23.22	-35.22	-0.16
368	SLE RA 20	-802	26	3531	-23.54	-35.66	-0.17
368	SLE RA 21	-802	26	3534	-23.58	-35.67	-0.17
368	SLE FR 1	-689	23	3078	-20.75	-30.6	-0.15
368	SLE FR 2	-689	23	3079	-20.76	-30.6	-0.15
368	SLE FR 3	-693	23	3090	-20.89	-30.78	-0.15
368	SLE FR 4	-720	24	3206	-21.49	-31.99	-0.15
368	SLE FR 5	-724	24	3217	-21.62	-32.16	-0.15
368	SLE FR 6	-740	24	3289	-21.97	-32.91	-0.16
368	SLE QP 1	-689	23	3078	-20.75	-30.6	-0.15
368	SLE QP 2	-720	24	3205	-21.48	-31.99	-0.15
368	SLD 1	453	9	2669	-6.64	21.01	-0.07
368	SLD 2	453	9	2669	-6.64	21.01	-0.07
368	SLD 3	368	33	3088	-29.81	17.45	-0.2
368	SLD 4	368	33	3088	-29.81	17.45	-0.2
368	SLD 5	-239	-17	2408	18.12	-10.69	0.08
368	SLD 6	-239	-17	2408	18.12	-10.69	0.08
368	SLD 7	-522	63	3806	-59.12	-22.55	-0.37
368	SLD 8	-522	63	3806	-59.12	-22.55	-0.37
368	SLD 9	-917	-15	2604	16.16	-41.42	0.07
368	SLD 10	-917	-15	2604	16.16	-41.42	0.07
368	SLD 11	-1200	65	4001	-61.08	-53.28	-0.38
368	SLD 12	-1200	65	4001	-61.08	-53.28	-0.38
368	SLD 13	-1807	15	3321	-13.15	-81.43	-0.1
368	SLD 14	-1807	15	3321	-13.15	-81.43	-0.1
368	SLD 15	-1892	39	3741	-36.32	-84.98	-0.24
368	SLD 16	-1892	39	3741	-36.32	-84.98	-0.24
368	SLV 1	1951	-12	1967	13.64	88.7	0.05
368	SLV 2	1951	-12	1967	13.64	88.7	0.05
368	SLV 3	1747	44	2961	-41	80.15	-0.27
368	SLV 4	1747	44	2961	-41	80.15	-0.27
368	SLV 5	391	-73	1327	71.93	17.19	0.39
368	SLV 6	391	-73	1327	71.93	17.19	0.39
368	SLV 7	-289	116	4638	-110.2	-11.32	-0.67
368	SLV 8	-289	116	4638	-110.2	-11.32	-0.67
368	SLV 9	-1150	-68	1771	67.24	-52.66	0.37
368	SLV 10	-1150	-68	1771	67.24	-52.66	0.37
368	SLV 11	-1830	121	5082	-114.89	-81.17	-0.7
368	SLV 12	-1830	121	5082	-114.89	-81.17	-0.7
368	SLV 13	-3186	4	3449	-1.96	-144.12	-0.03
368	SLV 14	-3186	4	3449	-1.96	-144.12	-0.03
368	SLV 15	-3390	60	4442	-56.6	-152.68	-0.35
368	SLV 16	-3390	60	4442	-56.6	-152.68	-0.35
369	SLU 1	-593	24	2994	-22.26	-26.89	-0.14
369	SLU 2	-593	24	3001	-22.36	-26.9	-0.14
369	SLU 3	-612	25	3064	-23.14	-27.79	-0.15
369	SLU 4	-612	25	3069	-23.2	-27.79	-0.15
369	SLU 5	-606	25	3048	-22.95	-27.49	-0.15
369	SLU 6	-625	26	3111	-23.72	-28.38	-0.15
369	SLU 7	-625	26	3115	-23.78	-28.38	-0.15
369	SLU 8	-618	26	3088	-23.44	-28.07	-0.15
369	SLU 9	-618	26	3092	-23.5	-28.08	-0.15
369	SLU 10	-692	28	3453	-25.27	-31.41	-0.16
369	SLU 11	-711	28	3516	-26.04	-32.3	-0.17
369	SLU 12	-711	28	3520	-26.1	-32.3	-0.17
369	SLU 13	-705	28	3500	-25.86	-32	-0.17
369	SLU 14	-724	29	3563	-26.63	-32.88	-0.17
369	SLU 15	-724	29	3567	-26.69	-32.89	-0.17
369	SLU 16	-717	29	3540	-26.34	-32.58	-0.17
369	SLU 17	-717	29	3544	-26.4	-32.58	-0.17
369	SLU 18	-734	29	3639	-26.41	-33.33	-0.17
369	SLU 19	-734	29	3644	-26.47	-33.34	-0.17
369	SLU 20	-747	29	3686	-27	-33.92	-0.17
369	SLU 21	-747	29	3691	-27.06	-33.92	-0.17
369	SLU 22	-684	27	3393	-25.22	-31.05	-0.16
369	SLU 23	-684	28	3401	-25.32	-31.06	-0.16
369	SLU 24	-704	28	3463	-26.09	-31.95	-0.17
369	SLU 25	-704	28	3468	-26.15	-31.95	-0.17
369	SLU 26	-697	28	3448	-25.91	-31.65	-0.17
369	SLU 27	-717	29	3510	-26.68	-32.53	-0.17
369	SLU 28	-717	29	3515	-26.74	-32.54	-0.17
369	SLU 29	-710	29	3487	-26.4	-32.23	-0.17
369	SLU 30	-710	29	3492	-26.46	-32.23	-0.17
369	SLU 31	-783	31	3853	-28.23	-35.56	-0.18
369	SLU 32	-803	32	3915	-29	-36.45	-0.19
369	SLU 33	-803	32	3920	-29.06	-36.46	-0.19
369	SLU 34	-796	31	3899	-28.82	-36.15	-0.18
369	SLU 35	-816	32	3962	-29.59	-37.04	-0.19
369	SLU 36	-816	32	3967	-29.65	-37.05	-0.19
369	SLU 37	-809	32	3939	-29.3	-36.73	-0.19
369	SLU 38	-809	32	3943	-29.36	-36.74	-0.19
369	SLU 39	-825	32	4039	-29.37	-37.49	-0.19
369	SLU 40	-825	32	4043	-29.43	-37.49	-0.19
369	SLU 41	-838	33	4086	-29.96	-38.08	-0.19
369	SLU 42	-838	33	4090	-30.02	-38.08	-0.19
369	SLU 43	-739	30	3755	-27.93	-33.54	-0.18
369	SLU 44	-739	31	3762	-28.03	-33.54	-0.18
369	SLU 45	-759	31	3825	-28.8	-34.43	-0.18
369	SLU 46	-759	31	3830	-28.86	-34.44	-0.18

Nodo	Cont.	Reazione a traslazione			Reazione a rotazione		
Ind.	N.br.	x	y	z	x	y	z
369	SLU 47	-752	31	3809	-28.62	-34.13	-0.18
369	SLU 48	-772	32	3872	-29.39	-35.02	-0.19
369	SLU 49	-772	32	3877	-29.45	-35.03	-0.19
369	SLU 50	-765	32	3849	-29.1	-34.71	-0.19
369	SLU 51	-765	32	3853	-29.16	-34.72	-0.19
369	SLU 52	-838	34	4214	-30.93	-38.05	-0.2
369	SLU 53	-858	35	4277	-31.71	-38.94	-0.2
369	SLU 54	-858	35	4282	-31.77	-38.94	-0.2
369	SLU 55	-851	34	4261	-31.52	-38.64	-0.2
369	SLU 56	-871	35	4324	-32.29	-39.53	-0.21
369	SLU 57	-871	35	4329	-32.35	-39.53	-0.21
369	SLU 58	-864	35	4301	-32.01	-39.22	-0.2
369	SLU 59	-864	35	4305	-32.07	-39.23	-0.2
369	SLU 60	-880	35	4401	-32.08	-39.97	-0.2
369	SLU 61	-880	35	4405	-32.14	-39.98	-0.21
369	SLU 62	-893	36	4448	-32.67	-40.56	-0.21
369	SLU 63	-893	36	4452	-32.73	-40.57	-0.21
369	SLU 64	-830	34	4154	-30.89	-37.69	-0.2
369	SLU 65	-830	34	4162	-30.99	-37.7	-0.2
369	SLU 66	-850	35	4225	-31.76	-38.59	-0.2
369	SLU 67	-850	35	4229	-31.82	-38.59	-0.2
369	SLU 68	-843	34	4209	-31.57	-38.29	-0.2
369	SLU 69	-863	35	4272	-32.35	-39.18	-0.21
369	SLU 70	-863	35	4276	-32.41	-39.18	-0.21
369	SLU 71	-856	35	4248	-32.06	-38.87	-0.2
369	SLU 72	-856	35	4253	-32.12	-38.88	-0.21
369	SLU 73	-929	37	4614	-33.89	-42.21	-0.22
369	SLU 74	-949	38	4677	-34.66	-43.09	-0.22
369	SLU 75	-949	38	4681	-34.72	-43.1	-0.22
369	SLU 76	-942	38	4661	-34.48	-42.8	-0.22
369	SLU 77	-962	38	4724	-35.25	-43.68	-0.23
369	SLU 78	-962	38	4728	-35.31	-43.69	-0.23
369	SLU 79	-955	38	4700	-34.97	-43.38	-0.22
369	SLU 80	-955	38	4705	-35.03	-43.38	-0.22
369	SLU 81	-972	38	4800	-35.04	-44.13	-0.22
369	SLU 82	-972	38	4804	-35.1	-44.13	-0.22
369	SLU 83	-985	39	4847	-35.63	-44.72	-0.23
369	SLU 84	-985	39	4851	-35.69	-44.72	-0.23
369	SLE RA 1	-619	25	3108	-23.11	-28.08	-0.15
369	SLE RA 2	-619	25	3113	-23.18	-28.09	-0.15
369	SLE RA 3	-632	26	3155	-23.69	-28.68	-0.15
369	SLE RA 4	-632	26	3158	-23.73	-28.68	-0.15
369	SLE RA 5	-627	26	3144	-23.57	-28.48	-0.15
369	SLE RA 6	-640	26	3186	-24.08	-29.07	-0.15
369	SLE RA 7	-640	26	3189	-24.12	-29.07	-0.15
369	SLE RA 8	-636	26	3171	-23.89	-28.87	-0.15
369	SLE RA 9	-636	26	3173	-23.93	-28.87	-0.15
369	SLE RA 10	-685	27	3414	-25.11	-31.09	-0.16
369	SLE RA 11	-698	28	3456	-25.63	-31.68	-0.16
369	SLE RA 12	-698	28	3459	-25.67	-31.69	-0.16
369	SLE RA 13	-693	28	3445	-25.5	-31.48	-0.16
369	SLE RA 14	-706	28	3487	-26.02	-32.07	-0.17
369	SLE RA 15	-706	28	3490	-26.06	-32.08	-0.17
369	SLE RA 16	-702	28	3472	-25.83	-31.87	-0.17
369	SLE RA 17	-702	28	3475	-25.87	-31.87	-0.17
369	SLE RA 18	-713	28	3538	-25.88	-32.37	-0.17
369	SLE RA 19	-713	28	3541	-25.92	-32.38	-0.17
369	SLE RA 20	-722	29	3570	-26.27	-32.77	-0.17
369	SLE RA 21	-722	29	3573	-26.31	-32.77	-0.17
369	SLE FR 1	-619	25	3108	-23.11	-28.08	-0.15
369	SLE FR 2	-619	25	3109	-23.12	-28.08	-0.15
369	SLE FR 3	-622	25	3120	-23.27	-28.24	-0.15
369	SLE FR 4	-647	26	3238	-23.95	-29.37	-0.15
369	SLE FR 5	-650	26	3250	-24.1	-29.53	-0.15
369	SLE FR 6	-666	27	3323	-24.49	-30.23	-0.16
369	SLE QP 1	-619	25	3108	-23.11	-28.08	-0.15
369	SLE QP 2	-647	26	3237	-23.94	-29.37	-0.15
369	SLD 1	381	10	2570	-8.67	16.81	-0.07
369	SLD 2	381	10	2570	-8.67	16.81	-0.07
369	SLD 3	288	33	2945	-31.12	12.96	-0.2
369	SLD 4	288	33	2945	-31.12	12.96	-0.2
369	SLD 5	-197	-15	2468	14.68	-9.66	0.06
369	SLD 6	-197	-15	2468	14.68	-9.66	0.06
369	SLD 7	-508	64	3718	-60.13	-22.52	-0.35
369	SLD 8	-508	64	3718	-60.13	-22.52	-0.35
369	SLD 9	-786	-12	2756	12.26	-36.22	0.05
369	SLD 10	-786	-12	2756	12.26	-36.22	0.05
369	SLD 11	-1097	67	4006	-62.56	-49.07	-0.36
369	SLD 12	-1097	67	4006	-62.56	-49.07	-0.36
369	SLD 13	-1581	19	3529	-16.76	-71.69	-0.11
369	SLD 14	-1581	19	3529	-16.76	-71.69	-0.11
369	SLD 15	-1675	43	3904	-39.21	-75.55	-0.23
369	SLD 16	-1675	43	3904	-39.21	-75.55	-0.23
369	SLV 1	1695	-13	1705	12.08	75.82	0.04
369	SLV 2	1695	-13	1705	12.08	75.82	0.04
369	SLV 3	1472	43	2592	-40.83	66.6	-0.25
369	SLV 4	1472	43	2592	-40.83	66.6	-0.25
369	SLV 5	394	-70	1431	67.11	16.18	0.35
369	SLV 6	394	-70	1431	67.11	16.18	0.35
369	SLV 7	-349	116	4389	-109.25	-14.57	-0.62
369	SLV 8	-349	116	4389	-109.25	-14.57	-0.62

Nodo	Cont.	Reazione a traslazione			Reazione a rotazione		
Ind.	N.br.	x	y	z	x	y	z
369	SLV 9	-944	-64	2085	61.37	-44.17	0.32
369	SLV 10	-944	-64	2085	61.37	-44.17	0.32
369	SLV 11	-1687	123	5043	-114.99	-74.91	-0.65
369	SLV 12	-1687	123	5043	-114.99	-74.91	-0.65
369	SLV 13	-2766	9	3882	-7.05	-125.33	-0.05
369	SLV 14	-2766	9	3882	-7.05	-125.33	-0.05
369	SLV 15	-2988	65	4770	-59.95	-134.56	-0.34
369	SLV 16	-2988	65	4770	-59.95	-134.56	-0.34
370	SLU 1	-568	27	3144	-25.14	-25.99	-0.14
370	SLU 2	-568	27	3152	-25.26	-26.01	-0.14
370	SLU 3	-586	28	3220	-26.11	-26.81	-0.14
370	SLU 4	-586	28	3225	-26.18	-26.82	-0.14
370	SLU 5	-580	28	3203	-25.91	-26.55	-0.14
370	SLU 6	-598	29	3271	-26.76	-27.35	-0.15
370	SLU 7	-598	29	3276	-26.83	-27.36	-0.15
370	SLU 8	-591	29	3246	-26.45	-27.07	-0.15
370	SLU 9	-592	29	3251	-26.52	-27.08	-0.15
370	SLU 10	-665	31	3633	-28.61	-30.44	-0.16
370	SLU 11	-682	32	3701	-29.47	-31.24	-0.16
370	SLU 12	-682	32	3705	-29.54	-31.25	-0.16
370	SLU 13	-676	32	3684	-29.27	-30.98	-0.16
370	SLU 14	-694	33	3751	-30.12	-31.78	-0.17
370	SLU 15	-694	33	3756	-30.19	-31.79	-0.17
370	SLU 16	-688	32	3726	-29.8	-31.5	-0.16
370	SLU 17	-688	32	3731	-29.87	-31.51	-0.17
370	SLU 18	-706	32	3831	-29.93	-32.32	-0.17
370	SLU 19	-706	32	3836	-30.01	-32.33	-0.17
370	SLU 20	-718	33	3882	-30.59	-32.86	-0.17
370	SLU 21	-718	33	3886	-30.66	-32.87	-0.17
370	SLU 22	-656	31	3569	-28.53	-30.02	-0.16
370	SLU 23	-656	31	3577	-28.65	-30.04	-0.16
370	SLU 24	-674	32	3645	-29.5	-30.84	-0.16
370	SLU 25	-674	32	3650	-29.57	-30.85	-0.16
370	SLU 26	-668	32	3628	-29.3	-30.58	-0.16
370	SLU 27	-685	33	3696	-30.15	-31.38	-0.17
370	SLU 28	-685	33	3701	-30.22	-31.39	-0.17
370	SLU 29	-679	32	3671	-29.84	-31.1	-0.17
370	SLU 30	-679	32	3676	-29.91	-31.11	-0.17
370	SLU 31	-753	35	4058	-32	-34.47	-0.18
370	SLU 32	-770	35	4125	-32.86	-35.27	-0.18
370	SLU 33	-770	36	4130	-32.93	-35.28	-0.18
370	SLU 34	-764	35	4109	-32.66	-35.01	-0.18
370	SLU 35	-782	36	4176	-33.51	-35.81	-0.19
370	SLU 36	-782	36	4181	-33.58	-35.82	-0.19
370	SLU 37	-776	36	4151	-33.19	-35.53	-0.18
370	SLU 38	-776	36	4156	-33.26	-35.54	-0.18
370	SLU 39	-794	36	4256	-33.33	-36.35	-0.18
370	SLU 40	-794	36	4261	-33.4	-36.36	-0.18
370	SLU 41	-805	37	4306	-33.98	-36.89	-0.19
370	SLU 42	-805	37	4311	-34.05	-36.9	-0.19
370	SLU 43	-708	34	3942	-31.52	-32.41	-0.17
370	SLU 44	-709	34	3950	-31.63	-32.42	-0.17
370	SLU 45	-726	35	4018	-32.49	-33.23	-0.18
370	SLU 46	-726	35	4023	-32.56	-33.24	-0.18
370	SLU 47	-720	35	4001	-32.29	-32.96	-0.18
370	SLU 48	-738	36	4068	-33.14	-33.77	-0.18
370	SLU 49	-738	36	4073	-33.21	-33.78	-0.18
370	SLU 50	-732	35	4043	-32.82	-33.49	-0.18
370	SLU 51	-732	36	4048	-32.89	-33.5	-0.18
370	SLU 52	-805	38	4431	-34.99	-36.85	-0.19
370	SLU 53	-823	39	4498	-35.85	-37.66	-0.2
370	SLU 54	-823	39	4503	-35.92	-37.67	-0.2
370	SLU 55	-817	38	4481	-35.65	-37.39	-0.2
370	SLU 56	-834	39	4549	-36.5	-38.2	-0.2
370	SLU 57	-834	39	4554	-36.57	-38.21	-0.2
370	SLU 58	-828	39	4524	-36.18	-37.92	-0.2
370	SLU 59	-828	39	4529	-36.25	-37.93	-0.2
370	SLU 60	-846	39	4628	-36.31	-38.74	-0.2
370	SLU 61	-846	39	4633	-36.38	-38.75	-0.2
370	SLU 62	-858	40	4679	-36.97	-39.28	-0.2
370	SLU 63	-858	40	4684	-37.04	-39.29	-0.2
370	SLU 64	-796	38	4367	-34.91	-36.44	-0.19
370	SLU 65	-796	38	4375	-35.02	-36.45	-0.19
370	SLU 66	-814	39	4443	-35.88	-37.26	-0.2
370	SLU 67	-814	39	4447	-35.95	-37.27	-0.2
370	SLU 68	-808	39	4426	-35.68	-36.99	-0.2
370	SLU 69	-826	39	4493	-36.53	-37.8	-0.2
370	SLU 70	-826	40	4498	-36.6	-37.81	-0.2
370	SLU 71	-819	39	4468	-36.21	-37.52	-0.2
370	SLU 72	-820	39	4473	-36.29	-37.53	-0.2
370	SLU 73	-893	41	4855	-38.38	-40.88	-0.21
370	SLU 74	-910	42	4923	-39.24	-41.69	-0.22
370	SLU 75	-911	42	4928	-39.31	-41.7	-0.22
370	SLU 76	-905	42	4906	-39.04	-41.42	-0.22
370	SLU 77	-922	43	4974	-39.89	-42.23	-0.22
370	SLU 78	-922	43	4979	-39.96	-42.24	-0.22
370	SLU 79	-916	43	4949	-39.57	-41.95	-0.22
370	SLU 80	-916	43	4954	-39.64	-41.96	-0.22
370	SLU 81	-934	43	5053	-39.7	-42.77	-0.22
370	SLU 82	-934	43	5058	-39.77	-42.78	-0.22
370	SLU 83	-946	44	5104	-40.36	-43.31	-0.22

Nodo	Cont.	Reazione a traslazione			Reazione a rotazione		
Ind.	N.br.	x	y	z	x	y	z
370	SLU 84	-946	44	5109	-40.43	-43.32	-0.22
370	SLE RA 1	-593	28	3266	-26.11	-27.14	-0.14
370	SLE RA 2	-593	28	3271	-26.18	-27.15	-0.14
370	SLE RA 3	-605	29	3316	-26.75	-27.69	-0.15
370	SLE RA 4	-605	29	3319	-26.8	-27.7	-0.15
370	SLE RA 5	-601	29	3305	-26.62	-27.51	-0.15
370	SLE RA 6	-613	29	3350	-27.19	-28.05	-0.15
370	SLE RA 7	-613	29	3353	-27.24	-28.06	-0.15
370	SLE RA 8	-609	29	3333	-26.98	-27.86	-0.15
370	SLE RA 9	-609	29	3337	-27.03	-27.87	-0.15
370	SLE RA 10	-658	31	3591	-28.42	-30.11	-0.16
370	SLE RA 11	-669	31	3637	-28.99	-30.65	-0.16
370	SLE RA 12	-669	31	3640	-29.04	-30.65	-0.16
370	SLE RA 13	-665	31	3625	-28.86	-30.47	-0.16
370	SLE RA 14	-677	32	3670	-29.43	-31	-0.16
370	SLE RA 15	-677	32	3674	-29.48	-31.01	-0.16
370	SLE RA 16	-673	32	3654	-29.22	-30.82	-0.16
370	SLE RA 17	-673	32	3657	-29.26	-30.82	-0.16
370	SLE RA 18	-685	32	3723	-29.3	-31.36	-0.16
370	SLE RA 19	-685	32	3727	-29.35	-31.37	-0.16
370	SLE RA 20	-693	32	3757	-29.74	-31.72	-0.16
370	SLE RA 21	-693	32	3760	-29.79	-31.73	-0.16
370	SLE FR 1	-593	28	3266	-26.11	-27.14	-0.14
370	SLE FR 2	-593	28	3267	-26.12	-27.15	-0.14
370	SLE FR 3	-596	28	3279	-26.28	-27.29	-0.15
370	SLE FR 4	-621	29	3404	-27.08	-28.41	-0.15
370	SLE FR 5	-624	29	3417	-27.24	-28.55	-0.15
370	SLE FR 6	-639	30	3495	-27.71	-29.25	-0.15
370	SLE QP 1	-593	28	3266	-26.11	-27.14	-0.14
370	SLE QP 2	-621	29	3403	-27.07	-28.41	-0.15
370	SLD 1	273	24	2409	-21.91	13.76	-0.07
370	SLD 2	273	24	2409	-21.91	13.76	-0.07
370	SLD 3	172	46	2753	-41.74	9.91	-0.17
370	SLD 4	172	46	2753	-41.74	9.91	-0.17
370	SLD 5	-200	-5	2584	4.55	-9.91	0.02
370	SLD 6	-200	-5	2584	4.55	-9.91	0.02
370	SLD 7	-536	67	3729	-61.54	-22.76	-0.31
370	SLD 8	-536	67	3729	-61.54	-22.76	-0.31
370	SLD 9	-706	-8	3077	7.41	-34.06	0.01
370	SLD 10	-706	-8	3077	7.41	-34.06	0.01
370	SLD 11	-1042	63	4222	-58.68	-46.91	-0.32
370	SLD 12	-1042	63	4222	-58.68	-46.91	-0.32
370	SLD 13	-1414	13	4053	-12.39	-66.73	-0.13
370	SLD 14	-1414	13	4053	-12.39	-66.73	-0.13
370	SLD 15	-1514	34	4396	-32.22	-70.58	-0.23
370	SLD 16	-1514	34	4396	-32.22	-70.58	-0.23
370	SLV 1	1416	17	1131	-14.84	67.66	0.03
370	SLV 2	1416	17	1131	-14.84	67.66	0.03
370	SLV 3	1176	68	1942	-61.55	58.5	-0.2
370	SLV 4	1176	68	1942	-61.55	58.5	-0.2
370	SLV 5	354	-51	1492	47.46	14.31	0.26
370	SLV 6	354	-51	1492	47.46	14.31	0.26
370	SLV 7	-445	118	4194	-108.27	-16.23	-0.52
370	SLV 8	-445	118	4194	-108.27	-16.23	-0.52
370	SLV 9	-797	-59	2612	54.13	-40.59	0.22
370	SLV 10	-797	-59	2612	54.13	-40.59	0.22
370	SLV 11	-1595	110	5314	-101.59	-71.13	-0.56
370	SLV 12	-1595	110	5314	-101.59	-71.13	-0.56
370	SLV 13	-2418	-9	4864	7.42	-115.32	-0.1
370	SLV 14	-2418	-9	4864	7.42	-115.32	-0.1
370	SLV 15	-2657	41	5675	-39.3	-124.48	-0.33
370	SLV 16	-2657	41	5675	-39.3	-124.48	-0.33
371	SLU 1	-611	33	3398	-29.03	-28.91	-0.12
371	SLU 2	-612	33	3407	-29.16	-28.94	-0.12
371	SLU 3	-629	34	3483	-30.13	-29.77	-0.12
371	SLU 4	-630	34	3489	-30.22	-29.79	-0.12
371	SLU 5	-624	34	3464	-29.91	-29.51	-0.12
371	SLU 6	-641	35	3541	-30.88	-30.34	-0.12
371	SLU 7	-641	35	3546	-30.96	-30.36	-0.12
371	SLU 8	-635	34	3513	-30.52	-30.05	-0.12
371	SLU 9	-635	34	3518	-30.6	-30.07	-0.12
371	SLU 10	-716	37	3934	-33.13	-33.88	-0.13
371	SLU 11	-733	38	4010	-34.1	-34.72	-0.14
371	SLU 12	-734	38	4016	-34.19	-34.73	-0.14
371	SLU 13	-728	38	3991	-33.88	-34.45	-0.14
371	SLU 14	-745	39	4068	-34.85	-35.29	-0.14
371	SLU 15	-745	39	4073	-34.93	-35.3	-0.14
371	SLU 16	-739	39	4040	-34.48	-34.99	-0.14
371	SLU 17	-739	39	4045	-34.57	-35.01	-0.14
371	SLU 18	-760	39	4151	-34.69	-35.97	-0.14
371	SLU 19	-760	39	4156	-34.78	-35.99	-0.14
371	SLU 20	-772	40	4208	-35.44	-36.54	-0.14
371	SLU 21	-772	40	4214	-35.52	-36.56	-0.14
371	SLU 22	-705	37	3865	-33	-33.36	-0.13
371	SLU 23	-705	37	3874	-33.14	-33.39	-0.13
371	SLU 24	-723	38	3950	-34.11	-34.22	-0.14
371	SLU 25	-723	38	3956	-34.19	-34.24	-0.14
371	SLU 26	-717	38	3931	-33.88	-33.96	-0.14
371	SLU 27	-734	39	4008	-34.85	-34.79	-0.14
371	SLU 28	-735	39	4013	-34.94	-34.81	-0.14
371	SLU 29	-728	39	3980	-34.49	-34.5	-0.14

Nodo	Cont.	Reazione a traslazione			Reazione a rotazione		
Ind.	N.br.	x	y	z	x	y	z
371	SLU 30	-729	39	3985	-34.57	-34.52	-0.14
371	SLU 31	-809	42	4401	-37.11	-38.33	-0.15
371	SLU 32	-827	43	4478	-38.08	-39.16	-0.15
371	SLU 33	-827	43	4483	-38.16	-39.18	-0.15
371	SLU 34	-821	43	4458	-37.85	-38.9	-0.15
371	SLU 35	-839	44	4535	-38.82	-39.74	-0.16
371	SLU 36	-839	44	4540	-38.9	-39.75	-0.16
371	SLU 37	-832	43	4507	-38.46	-39.44	-0.16
371	SLU 38	-833	43	4512	-38.54	-39.46	-0.16
371	SLU 39	-853	44	4618	-38.67	-40.42	-0.16
371	SLU 40	-854	44	4624	-38.75	-40.44	-0.16
371	SLU 41	-865	44	4676	-39.41	-40.99	-0.16
371	SLU 42	-866	44	4681	-39.5	-41.01	-0.16
371	SLU 43	-763	41	4257	-36.37	-36.05	-0.15
371	SLU 44	-763	41	4266	-36.51	-36.08	-0.15
371	SLU 45	-780	42	4342	-37.48	-36.91	-0.15
371	SLU 46	-781	42	4348	-37.56	-36.93	-0.15
371	SLU 47	-775	42	4323	-37.25	-36.65	-0.15
371	SLU 48	-792	43	4400	-38.22	-37.49	-0.15
371	SLU 49	-793	43	4405	-38.31	-37.5	-0.15
371	SLU 50	-786	43	4372	-37.86	-37.19	-0.15
371	SLU 51	-787	43	4377	-37.94	-37.21	-0.15
371	SLU 52	-867	46	4793	-40.48	-41.03	-0.16
371	SLU 53	-885	47	4870	-41.45	-41.86	-0.17
371	SLU 54	-885	47	4875	-41.53	-41.88	-0.17
371	SLU 55	-879	46	4851	-41.22	-41.6	-0.17
371	SLU 56	-896	47	4927	-42.19	-42.43	-0.17
371	SLU 57	-897	48	4932	-42.28	-42.45	-0.17
371	SLU 58	-890	47	4899	-41.83	-42.14	-0.17
371	SLU 59	-891	47	4904	-41.91	-42.16	-0.17
371	SLU 60	-911	47	5010	-42.04	-43.12	-0.17
371	SLU 61	-912	47	5016	-42.12	-43.14	-0.17
371	SLU 62	-923	48	5068	-42.78	-43.69	-0.17
371	SLU 63	-923	48	5073	-42.87	-43.71	-0.17
371	SLU 64	-856	45	4724	-40.35	-40.5	-0.16
371	SLU 65	-857	46	4733	-40.48	-40.53	-0.16
371	SLU 66	-874	47	4810	-41.45	-41.36	-0.17
371	SLU 67	-874	47	4815	-41.54	-41.38	-0.17
371	SLU 68	-868	46	4791	-41.23	-41.1	-0.17
371	SLU 69	-886	47	4867	-42.2	-41.94	-0.17
371	SLU 70	-886	48	4872	-42.28	-41.95	-0.17
371	SLU 71	-880	47	4839	-41.83	-41.64	-0.17
371	SLU 72	-880	47	4844	-41.92	-41.66	-0.17
371	SLU 73	-961	50	5260	-44.45	-45.48	-0.18
371	SLU 74	-978	51	5337	-45.42	-46.31	-0.18
371	SLU 75	-978	51	5342	-45.51	-46.33	-0.18
371	SLU 76	-973	51	5318	-45.2	-46.05	-0.18
371	SLU 77	-990	52	5394	-46.17	-46.88	-0.19
371	SLU 78	-990	52	5399	-46.25	-46.9	-0.19
371	SLU 79	-984	52	5366	-45.8	-46.59	-0.18
371	SLU 80	-984	52	5371	-45.89	-46.61	-0.19
371	SLU 81	-1005	52	5477	-46.01	-47.57	-0.19
371	SLU 82	-1005	52	5483	-46.1	-47.59	-0.19
371	SLU 83	-1017	53	5535	-46.76	-48.14	-0.19
371	SLU 84	-1017	53	5540	-46.84	-48.16	-0.19
371	SLE RA 1	-638	34	3532	-30.16	-30.18	-0.12
371	SLE RA 2	-638	34	3537	-30.25	-30.2	-0.12
371	SLE RA 3	-650	35	3588	-30.9	-30.75	-0.12
371	SLE RA 4	-650	35	3592	-30.96	-30.76	-0.12
371	SLE RA 5	-646	35	3576	-30.75	-30.58	-0.12
371	SLE RA 6	-658	35	3627	-31.4	-31.13	-0.13
371	SLE RA 7	-658	35	3630	-31.45	-31.15	-0.13
371	SLE RA 8	-654	35	3608	-31.15	-30.94	-0.13
371	SLE RA 9	-654	35	3611	-31.21	-30.95	-0.13
371	SLE RA 10	-708	37	3889	-32.9	-33.5	-0.13
371	SLE RA 11	-719	38	3940	-33.55	-34.05	-0.14
371	SLE RA 12	-720	38	3943	-33.6	-34.06	-0.14
371	SLE RA 13	-716	38	3927	-33.4	-33.88	-0.13
371	SLE RA 14	-727	38	3978	-34.04	-34.43	-0.14
371	SLE RA 15	-727	38	3981	-34.1	-34.44	-0.14
371	SLE RA 16	-723	38	3959	-33.8	-34.24	-0.14
371	SLE RA 17	-723	38	3963	-33.85	-34.25	-0.14
371	SLE RA 18	-737	38	4034	-33.94	-34.89	-0.14
371	SLE RA 19	-737	38	4037	-34	-34.9	-0.14
371	SLE RA 20	-745	39	4072	-34.44	-35.27	-0.14
371	SLE RA 21	-745	39	4075	-34.49	-35.28	-0.14
371	SLE FR 1	-638	34	3532	-30.16	-30.18	-0.12
371	SLE FR 2	-638	34	3533	-30.18	-30.18	-0.12
371	SLE FR 3	-641	34	3547	-30.36	-30.33	-0.12
371	SLE FR 4	-668	35	3683	-31.31	-31.59	-0.13
371	SLE FR 5	-671	35	3697	-31.49	-31.74	-0.13
371	SLE FR 6	-687	36	3783	-32.05	-32.53	-0.13
371	SLE QP 1	-638	34	3532	-30.16	-30.18	-0.12
371	SLE QP 2	-668	35	3682	-31.29	-31.59	-0.13
371	SLD 1	93	33	2113	-28.89	4.98	-0.12
371	SLD 2	93	33	2113	-28.89	4.98	-0.12
371	SLD 3	-13	50	2470	-44.26	0.72	-0.16
371	SLD 4	-13	50	2470	-44.26	0.72	-0.16
371	SLD 5	-280	8	2669	-7.25	-14.15	-0.06
371	SLD 6	-280	8	2669	-7.25	-14.15	-0.06
371	SLD 7	-631	67	3861	-58.5	-28.36	-0.21

Nodo	Cont.	Reazione a traslazione			Reazione a rotazione		
Ind.	N.br.	x	y	z	x	y	z
371	SLD 8	-631	67	3861	-58.5	-28.36	-0.21
371	SLD 9	-705	4	3503	-4.08	-34.82	-0.05
371	SLD 10	-705	4	3503	-4.08	-34.82	-0.05
371	SLD 11	-1055	63	4695	-55.34	-49.03	-0.2
371	SLD 12	-1055	63	4695	-55.34	-49.03	-0.2
371	SLD 13	-1323	20	4894	-18.33	-63.9	-0.09
371	SLD 14	-1323	20	4894	-18.33	-63.9	-0.09
371	SLD 15	-1428	38	5251	-33.7	-68.16	-0.13
371	SLD 16	-1428	38	5251	-33.7	-68.16	-0.13
371	SLV 1	1066	29	102	-25.44	51.74	-0.11
371	SLV 2	1066	29	102	-25.44	51.74	-0.11
371	SLV 3	816	71	945	-61.65	41.64	-0.21
371	SLV 4	816	71	945	-61.65	41.64	-0.21
371	SLV 5	231	-30	1330	25.39	8.74	0.04
371	SLV 6	231	-30	1330	25.39	8.74	0.04
371	SLV 7	-601	109	4139	-95.33	-24.95	-0.31
371	SLV 8	-601	109	4139	-95.33	-24.95	-0.31
371	SLV 9	-734	-38	3225	32.74	-38.23	0.06
371	SLV 10	-734	-38	3225	32.74	-38.23	0.06
371	SLV 11	-1566	100	6034	-87.98	-71.92	-0.29
371	SLV 12	-1566	100	6034	-87.98	-71.92	-0.29
371	SLV 13	-2152	0	6419	-0.94	-104.82	-0.04
371	SLV 14	-2152	0	6419	-0.94	-104.82	-0.04
371	SLV 15	-2401	41	7262	-37.15	-114.92	-0.14
371	SLV 16	-2401	41	7262	-37.15	-114.92	-0.14
372	SLU 1	-658	50	4007	-33.64	-34.46	0.06
372	SLU 2	-659	51	4017	-33.8	-34.51	0.06
372	SLU 3	-676	52	4113	-34.91	-35.44	0.06
372	SLU 4	-677	52	4119	-35	-35.47	0.06
372	SLU 5	-671	52	4088	-34.65	-35.16	0.06
372	SLU 6	-688	53	4184	-35.76	-36.09	0.07
372	SLU 7	-689	54	4190	-35.86	-36.12	0.07
372	SLU 8	-682	53	4149	-35.34	-35.76	0.07
372	SLU 9	-683	53	4155	-35.44	-35.79	0.07
372	SLU 10	-769	58	4653	-38.5	-40.33	0.07
372	SLU 11	-786	59	4749	-39.61	-41.25	0.07
372	SLU 12	-787	59	4755	-39.7	-41.29	0.07
372	SLU 13	-781	59	4724	-39.35	-40.98	0.07
372	SLU 14	-799	61	4820	-40.46	-41.91	0.08
372	SLU 15	-799	61	4826	-40.56	-41.94	0.08
372	SLU 16	-792	60	4785	-40.04	-41.58	0.07
372	SLU 17	-793	60	4791	-40.14	-41.61	0.07
372	SLU 18	-815	60	4916	-40.35	-42.76	0.08
372	SLU 19	-816	61	4922	-40.45	-42.8	0.08
372	SLU 20	-827	62	4987	-41.2	-43.42	0.08
372	SLU 21	-828	62	4993	-41.3	-43.45	0.08
372	SLU 22	-756	57	4573	-38.31	-39.65	0.07
372	SLU 23	-757	58	4583	-38.47	-39.71	0.07
372	SLU 24	-775	59	4678	-39.58	-40.63	0.07
372	SLU 25	-775	59	4684	-39.68	-40.67	0.07
372	SLU 26	-769	59	4654	-39.32	-40.36	0.07
372	SLU 27	-787	60	4750	-40.43	-41.29	0.08
372	SLU 28	-787	61	4756	-40.53	-41.32	0.08
372	SLU 29	-781	60	4715	-40.01	-40.96	0.07
372	SLU 30	-781	60	4721	-40.11	-40.99	0.07
372	SLU 31	-867	65	5219	-43.17	-45.52	0.08
372	SLU 32	-885	66	5315	-44.28	-46.45	0.08
372	SLU 33	-885	66	5321	-44.38	-46.48	0.08
372	SLU 34	-880	66	5290	-44.02	-46.17	0.08
372	SLU 35	-897	68	5386	-45.13	-47.1	0.08
372	SLU 36	-898	68	5392	-45.23	-47.13	0.08
372	SLU 37	-891	67	5351	-44.71	-46.77	0.08
372	SLU 38	-891	67	5357	-44.81	-46.8	0.08
372	SLU 39	-914	67	5482	-45.02	-47.96	0.08
372	SLU 40	-914	68	5488	-45.12	-47.99	0.08
372	SLU 41	-926	69	5553	-45.87	-48.61	0.09
372	SLU 42	-926	69	5559	-45.97	-48.64	0.09
372	SLU 43	-822	63	5015	-42.12	-43.01	0.08
372	SLU 44	-823	63	5025	-42.29	-43.07	0.08
372	SLU 45	-840	65	5121	-43.4	-44	0.08
372	SLU 46	-841	65	5127	-43.49	-44.03	0.08
372	SLU 47	-835	64	5096	-43.14	-43.72	0.08
372	SLU 48	-852	66	5192	-44.25	-44.65	0.08
372	SLU 49	-853	66	5198	-44.35	-44.68	0.08
372	SLU 50	-846	66	5157	-43.83	-44.32	0.08
372	SLU 51	-847	66	5163	-43.93	-44.35	0.08
372	SLU 52	-933	70	5661	-46.99	-48.88	0.09
372	SLU 53	-950	72	5757	-48.09	-49.81	0.09
372	SLU 54	-951	72	5763	-48.19	-49.84	0.09
372	SLU 55	-945	72	5732	-47.84	-49.54	0.09
372	SLU 56	-962	73	5828	-48.95	-50.46	0.09
372	SLU 57	-963	73	5834	-49.04	-50.5	0.09
372	SLU 58	-956	73	5794	-48.53	-50.13	0.09
372	SLU 59	-957	73	5800	-48.63	-50.17	0.09
372	SLU 60	-979	73	5924	-48.84	-51.32	0.09
372	SLU 61	-980	73	5930	-48.94	-51.35	0.09
372	SLU 62	-991	74	5995	-49.69	-51.97	0.09
372	SLU 63	-992	74	6001	-49.79	-52.01	0.09
372	SLU 64	-920	70	5581	-46.8	-48.21	0.09
372	SLU 65	-921	70	5591	-46.96	-48.26	0.09
372	SLU 66	-938	72	5687	-48.07	-49.19	0.09

Nodo	Cont.	Reazione a traslazione			Reazione a rotazione		
Ind.	N.br.	x	y	z	x	y	z
372	SLU 67	-939	72	5693	-48.16	-49.22	0.09
372	SLU 68	-933	72	5662	-47.81	-48.92	0.09
372	SLU 69	-950	73	5758	-48.92	-49.84	0.09
372	SLU 70	-951	73	5764	-49.02	-49.87	0.09
372	SLU 71	-944	73	5723	-48.5	-49.51	0.09
372	SLU 72	-945	73	5729	-48.6	-49.55	0.09
372	SLU 73	-1031	77	6227	-51.66	-54.08	0.1
372	SLU 74	-1048	79	6323	-52.77	-55	0.1
372	SLU 75	-1049	79	6329	-52.86	-55.04	0.1
372	SLU 76	-1043	79	6298	-52.51	-54.73	0.1
372	SLU 77	-1061	80	6394	-53.62	-55.66	0.1
372	SLU 78	-1061	80	6400	-53.72	-55.69	0.1
372	SLU 79	-1054	80	6359	-53.2	-55.33	0.1
372	SLU 80	-1055	80	6365	-53.3	-55.36	0.1
372	SLU 81	-1077	80	6490	-53.51	-56.51	0.1
372	SLU 82	-1078	80	6496	-53.61	-56.55	0.1
372	SLU 83	-1089	81	6561	-54.36	-57.17	0.1
372	SLU 84	-1090	82	6567	-54.46	-57.2	0.1
372	SLE RA 1	-686	52	4169	-34.97	-35.94	0.06
372	SLE RA 2	-687	52	4175	-35.08	-35.98	0.07
372	SLE RA 3	-698	54	4239	-35.82	-36.6	0.07
372	SLE RA 4	-699	54	4243	-35.88	-36.62	0.07
372	SLE RA 5	-695	53	4223	-35.65	-36.41	0.07
372	SLE RA 6	-706	54	4287	-36.39	-37.03	0.07
372	SLE RA 7	-707	55	4291	-36.45	-37.05	0.07
372	SLE RA 8	-702	54	4263	-36.11	-36.81	0.07
372	SLE RA 9	-703	54	4267	-36.17	-36.83	0.07
372	SLE RA 10	-760	57	4599	-38.21	-39.85	0.07
372	SLE RA 11	-772	58	4663	-38.95	-40.47	0.07
372	SLE RA 12	-772	58	4667	-39.02	-40.49	0.07
372	SLE RA 13	-768	58	4647	-38.78	-40.29	0.07
372	SLE RA 14	-780	59	4711	-39.52	-40.91	0.07
372	SLE RA 15	-780	59	4715	-39.58	-40.93	0.07
372	SLE RA 16	-776	59	4688	-39.24	-40.69	0.07
372	SLE RA 17	-776	59	4692	-39.3	-40.71	0.07
372	SLE RA 18	-791	59	4775	-39.45	-41.48	0.07
372	SLE RA 19	-791	59	4779	-39.51	-41.5	0.07
372	SLE RA 20	-799	60	4822	-40.01	-41.91	0.07
372	SLE RA 21	-799	60	4826	-40.08	-41.94	0.07
372	SLE FR 1	-686	52	4169	-34.97	-35.94	0.06
372	SLE FR 2	-686	52	4170	-34.99	-35.95	0.06
372	SLE FR 3	-689	53	4188	-35.2	-36.12	0.07
372	SLE FR 4	-718	54	4352	-36.33	-37.61	0.07
372	SLE FR 5	-721	55	4369	-36.54	-37.78	0.07
372	SLE FR 6	-738	56	4472	-37.21	-38.71	0.07
372	SLE QP 1	-686	52	4169	-34.97	-35.94	0.06
372	SLE QP 2	-717	54	4350	-36.31	-37.6	0.07
372	SLD 1	-67	57	1700	-37.1	-0.26	0.07
372	SLD 2	-67	57	1700	-37.1	-0.26	0.07
372	SLD 3	-153	68	2143	-46.58	-4.04	0.09
372	SLD 4	-153	68	2143	-46.58	-4.04	0.09
372	SLD 5	-392	37	2883	-22.17	-20.68	0.04
372	SLD 6	-392	37	2883	-22.17	-20.68	0.04
372	SLD 7	-678	76	4360	-53.77	-33.25	0.1
372	SLD 8	-678	76	4360	-53.77	-33.25	0.1
372	SLD 9	-757	32	4340	-18.85	-41.95	0.04
372	SLD 10	-757	32	4340	-18.85	-41.95	0.04
372	SLD 11	-1043	72	5818	-50.46	-54.53	0.09
372	SLD 12	-1043	72	5818	-50.46	-54.53	0.09
372	SLD 13	-1282	40	6558	-26.04	-71.17	0.05
372	SLD 14	-1282	40	6558	-26.04	-71.17	0.05
372	SLD 15	-1368	52	7001	-35.52	-74.94	0.06
372	SLD 16	-1368	52	7001	-35.52	-74.94	0.06
372	SLV 1	765	59	-1692	-37.86	47.45	0.08
372	SLV 2	765	59	-1692	-37.86	47.45	0.08
372	SLV 3	562	87	-647	-60.27	38.54	0.12
372	SLV 4	562	87	-647	-60.27	38.54	0.12
372	SLV 5	35	13	954	-2.8	1.43	0.01
372	SLV 6	35	13	954	-2.8	1.43	0.01
372	SLV 7	-641	107	4435	-77.48	-28.27	0.14
372	SLV 8	-641	107	4435	-77.48	-28.27	0.14
372	SLV 9	-794	2	4265	4.85	-46.93	-0.01
372	SLV 10	-794	2	4265	4.85	-46.93	-0.01
372	SLV 11	-1470	95	7747	-69.83	-76.63	0.12
372	SLV 12	-1470	95	7747	-69.83	-76.63	0.12
372	SLV 13	-1997	22	9348	-12.36	-113.74	0.02
372	SLV 14	-1997	22	9348	-12.36	-113.74	0.02
372	SLV 15	-2200	50	10392	-34.76	-122.65	0.06
372	SLV 16	-2200	50	10392	-34.76	-122.65	0.06
373	SLU 1	-781	25	2674	-17.78	-21.64	-2.9
373	SLU 2	-783	25	2680	-17.86	-21.68	-2.92
373	SLU 3	-803	26	2747	-18.44	-22.25	-3.01
373	SLU 4	-804	26	2751	-18.5	-22.28	-3.02
373	SLU 5	-797	25	2729	-18.31	-22.09	-2.99
373	SLU 6	-817	26	2796	-18.89	-22.66	-3.09
373	SLU 7	-818	26	2800	-18.94	-22.69	-3.09
373	SLU 8	-810	26	2772	-18.67	-22.46	-3.05
373	SLU 9	-811	26	2776	-18.72	-22.48	-3.06
373	SLU 10	-912	29	3114	-20.39	-25.3	-3.33
373	SLU 11	-931	29	3180	-20.97	-25.88	-3.43
373	SLU 12	-932	30	3184	-21.02	-25.9	-3.44

Nodo	Cont.	Reazione a traslazione			Reazione a rotazione		
Ind.	N.br.	x	y	z	x	y	z
373	SLU 13	-926	29	3163	-20.83	-25.71	-3.4
373	SLU 14	-946	30	3229	-21.41	-26.28	-3.5
373	SLU 15	-947	30	3233	-21.46	-26.31	-3.51
373	SLU 16	-939	30	3206	-21.19	-26.08	-3.46
373	SLU 17	-940	30	3209	-21.25	-26.11	-3.47
373	SLU 18	-965	30	3293	-21.38	-26.82	-3.5
373	SLU 19	-966	30	3297	-21.43	-26.84	-3.5
373	SLU 20	-980	31	3342	-21.83	-27.22	-3.57
373	SLU 21	-981	31	3346	-21.88	-27.25	-3.58
373	SLU 22	-896	28	3060	-20.27	-24.88	-3.31
373	SLU 23	-898	29	3066	-20.36	-24.92	-3.33
373	SLU 24	-917	29	3133	-20.94	-25.49	-3.42
373	SLU 25	-918	29	3137	-20.99	-25.51	-3.43
373	SLU 26	-912	29	3115	-20.81	-25.33	-3.4
373	SLU 27	-932	30	3182	-21.39	-25.9	-3.49
373	SLU 28	-933	30	3186	-21.44	-25.92	-3.5
373	SLU 29	-925	30	3158	-21.17	-25.69	-3.46
373	SLU 30	-926	30	3162	-21.22	-25.72	-3.47
373	SLU 31	-1026	32	3500	-22.88	-28.54	-3.74
373	SLU 32	-1046	33	3567	-23.46	-29.11	-3.84
373	SLU 33	-1047	33	3570	-23.51	-29.13	-3.84
373	SLU 34	-1041	33	3549	-23.33	-28.95	-3.81
373	SLU 35	-1061	34	3616	-23.91	-29.52	-3.91
373	SLU 36	-1062	34	3619	-23.96	-29.54	-3.92
373	SLU 37	-1054	33	3592	-23.69	-29.32	-3.87
373	SLU 38	-1055	33	3595	-23.74	-29.34	-3.88
373	SLU 39	-1080	34	3679	-23.88	-30.05	-3.9
373	SLU 40	-1081	34	3683	-23.93	-30.07	-3.91
373	SLU 41	-1094	34	3729	-24.32	-30.46	-3.98
373	SLU 42	-1095	35	3732	-24.38	-30.48	-3.99
373	SLU 43	-976	31	3344	-22.26	-27.03	-3.63
373	SLU 44	-978	31	3350	-22.34	-27.07	-3.65
373	SLU 45	-998	32	3416	-22.92	-27.64	-3.74
373	SLU 46	-999	32	3420	-22.97	-27.66	-3.75
373	SLU 47	-992	32	3399	-22.79	-27.48	-3.72
373	SLU 48	-1012	32	3466	-23.37	-28.05	-3.82
373	SLU 49	-1013	33	3469	-23.42	-28.07	-3.82
373	SLU 50	-1005	32	3442	-23.15	-27.84	-3.78
373	SLU 51	-1006	32	3445	-23.2	-27.87	-3.79
373	SLU 52	-1106	35	3783	-24.86	-30.69	-4.06
373	SLU 53	-1126	36	3850	-25.44	-31.26	-4.16
373	SLU 54	-1127	36	3854	-25.5	-31.28	-4.17
373	SLU 55	-1121	35	3832	-25.31	-31.1	-4.14
373	SLU 56	-1141	36	3899	-25.89	-31.67	-4.23
373	SLU 57	-1142	36	3903	-25.94	-31.69	-4.24
373	SLU 58	-1134	36	3875	-25.67	-31.47	-4.19
373	SLU 59	-1135	36	3879	-25.72	-31.49	-4.2
373	SLU 60	-1160	36	3963	-25.86	-32.2	-4.23
373	SLU 61	-1161	36	3967	-25.91	-32.22	-4.24
373	SLU 62	-1175	37	4012	-26.31	-32.61	-4.3
373	SLU 63	-1175	37	4016	-26.36	-32.63	-4.31
373	SLU 64	-1091	35	3730	-24.75	-30.26	-4.04
373	SLU 65	-1093	35	3736	-24.84	-30.3	-4.06
373	SLU 66	-1112	36	3803	-25.42	-30.87	-4.15
373	SLU 67	-1113	36	3806	-25.47	-30.9	-4.16
373	SLU 68	-1107	35	3785	-25.28	-30.71	-4.13
373	SLU 69	-1127	36	3852	-25.86	-31.28	-4.23
373	SLU 70	-1128	36	3856	-25.91	-31.3	-4.23
373	SLU 71	-1120	36	3828	-25.64	-31.08	-4.19
373	SLU 72	-1121	36	3832	-25.7	-31.1	-4.2
373	SLU 73	-1221	39	4170	-27.36	-33.92	-4.47
373	SLU 74	-1241	39	4236	-27.94	-34.49	-4.57
373	SLU 75	-1242	39	4240	-27.99	-34.52	-4.58
373	SLU 76	-1236	39	4219	-27.81	-34.33	-4.54
373	SLU 77	-1256	40	4285	-28.39	-34.9	-4.64
373	SLU 78	-1257	40	4289	-28.44	-34.93	-4.65
373	SLU 79	-1249	40	4261	-28.17	-34.7	-4.6
373	SLU 80	-1250	40	4265	-28.22	-34.72	-4.61
373	SLU 81	-1275	40	4349	-28.36	-35.43	-4.64
373	SLU 82	-1276	40	4353	-28.41	-35.46	-4.64
373	SLU 83	-1289	41	4398	-28.8	-35.84	-4.71
373	SLU 84	-1290	41	4402	-28.85	-35.87	-4.72
373	SLE RA 1	-814	26	2784	-18.49	-22.57	-3.02
373	SLE RA 2	-815	26	2788	-18.55	-22.59	-3.03
373	SLE RA 3	-828	26	2833	-18.93	-22.97	-3.09
373	SLE RA 4	-829	26	2835	-18.97	-22.99	-3.1
373	SLE RA 5	-825	26	2821	-18.85	-22.87	-3.08
373	SLE RA 6	-838	27	2866	-19.23	-23.25	-3.14
373	SLE RA 7	-839	27	2868	-19.27	-23.26	-3.15
373	SLE RA 8	-833	27	2850	-19.09	-23.11	-3.12
373	SLE RA 9	-834	27	2852	-19.12	-23.13	-3.12
373	SLE RA 10	-901	28	3077	-20.23	-25.01	-3.31
373	SLE RA 11	-914	29	3122	-20.62	-25.39	-3.37
373	SLE RA 12	-915	29	3124	-20.65	-25.4	-3.37
373	SLE RA 13	-910	29	3110	-20.53	-25.28	-3.35
373	SLE RA 14	-924	29	3155	-20.91	-25.66	-3.42
373	SLE RA 15	-924	29	3157	-20.95	-25.68	-3.42
373	SLE RA 16	-919	29	3139	-20.77	-25.53	-3.39
373	SLE RA 17	-920	29	3141	-20.8	-25.54	-3.4
373	SLE RA 18	-937	29	3197	-20.89	-26.02	-3.42
373	SLE RA 19	-937	29	3200	-20.93	-26.03	-3.42

Nodo	Cont.	Reazione a traslazione			Reazione a rotazione		
Ind.	N.br.	x	y	z	x	y	z
373	SLE RA 20	-946	30	3230	-21.19	-26.29	-3.46
373	SLE RA 21	-947	30	3232	-21.23	-26.3	-3.47
373	SLE FR 1	-814	26	2784	-18.49	-22.57	-3.02
373	SLE FR 2	-814	26	2785	-18.5	-22.57	-3.02
373	SLE FR 3	-818	26	2797	-18.61	-22.67	-3.04
373	SLE FR 4	-851	27	2909	-19.22	-23.61	-3.14
373	SLE FR 5	-855	27	2921	-19.33	-23.71	-3.16
373	SLE FR 6	-875	28	2991	-19.69	-24.29	-3.22
373	SLE QP 1	-814	26	2784	-18.49	-22.57	-3.02
373	SLE QP 2	-851	27	2908	-19.21	-23.6	-3.14
373	SLD 1	-189	14	768	-19.68	-3.62	-3.15
373	SLD 2	-189	14	768	-19.68	-3.62	-3.15
373	SLD 3	-265	50	1058	-24.13	-5.78	-3.99
373	SLD 4	-265	50	1058	-24.13	-5.78	-3.99
373	SLD 5	-537	-31	1826	-12.6	-14.33	-1.88
373	SLD 6	-537	-31	1826	-12.6	-14.33	-1.88
373	SLD 7	-791	88	2793	-27.44	-21.53	-4.66
373	SLD 8	-791	88	2793	-27.44	-21.53	-4.66
373	SLD 9	-911	-34	3023	-10.99	-25.67	-1.62
373	SLD 10	-911	-34	3023	-10.99	-25.67	-1.62
373	SLD 11	-1165	84	3990	-25.82	-32.87	-4.4
373	SLD 12	-1165	84	3990	-25.82	-32.87	-4.4
373	SLD 13	-1436	4	4758	-14.3	-41.42	-2.29
373	SLD 14	-1436	4	4758	-14.3	-41.42	-2.29
373	SLD 15	-1512	39	5048	-18.75	-43.58	-3.12
373	SLD 16	-1512	39	5048	-18.75	-43.58	-3.12
373	SLV 1	656	-3	-1967	-20.1	21.89	-3.14
373	SLV 2	656	-3	-1967	-20.1	21.89	-3.14
373	SLV 3	476	81	-1283	-30.72	16.79	-5.14
373	SLV 4	476	81	-1283	-30.72	16.79	-5.14
373	SLV 5	-126	-109	408	-3.36	-2.22	-0.11
373	SLV 6	-126	-109	408	-3.36	-2.22	-0.11
373	SLV 7	-725	171	2688	-38.78	-19.21	-6.76
373	SLV 8	-725	171	2688	-38.78	-19.21	-6.76
373	SLV 9	-976	-117	3128	0.36	-27.99	0.49
373	SLV 10	-976	-117	3128	0.36	-27.99	0.49
373	SLV 11	-1575	163	5408	-35.06	-44.98	-6.16
373	SLV 12	-1575	163	5408	-35.06	-44.98	-6.16
373	SLV 13	-2178	-27	7100	-7.7	-63.99	-1.14
373	SLV 14	-2178	-27	7100	-7.7	-63.99	-1.14
373	SLV 15	-2358	56	7783	-18.33	-69.09	-3.14
373	SLV 16	-2358	56	7783	-18.33	-69.09	-3.14
374	SLU 1	-10	-726	3373	10.57	-1.85	-0.39
374	SLU 2	-10	-732	3400	10.72	-1.86	-0.4
374	SLU 3	-10	-750	3484	10.92	-1.91	-0.41
374	SLU 4	-10	-753	3500	11.01	-1.92	-0.41
374	SLU 5	-10	-748	3475	10.96	-1.91	-0.41
374	SLU 6	-10	-766	3559	11.17	-1.96	-0.42
374	SLU 7	-10	-769	3575	11.26	-1.96	-0.42
374	SLU 8	-10	-758	3522	11.06	-1.93	-0.41
374	SLU 9	-10	-762	3538	11.15	-1.94	-0.41
374	SLU 10	-12	-832	3860	12.22	-2.17	-0.46
374	SLU 11	-12	-850	3944	12.42	-2.22	-0.47
374	SLU 12	-12	-853	3960	12.51	-2.22	-0.47
374	SLU 13	-12	-848	3934	12.46	-2.21	-0.47
374	SLU 14	-12	-866	4018	12.67	-2.26	-0.48
374	SLU 15	-12	-869	4034	12.76	-2.27	-0.48
374	SLU 16	-12	-858	3982	12.56	-2.24	-0.48
374	SLU 17	-12	-861	3998	12.65	-2.24	-0.48
374	SLU 18	-12	-869	4030	12.71	-2.28	-0.49
374	SLU 19	-12	-872	4046	12.8	-2.29	-0.49
374	SLU 20	-12	-885	4104	12.96	-2.32	-0.49
374	SLU 21	-12	-888	4120	13.05	-2.33	-0.5
374	SLU 22	-11	-823	3819	12.02	-2.14	-0.46
374	SLU 23	-11	-829	3847	12.16	-2.15	-0.46
374	SLU 24	-12	-847	3930	12.37	-2.2	-0.47
374	SLU 25	-12	-850	3947	12.46	-2.21	-0.47
374	SLU 26	-12	-845	3921	12.41	-2.19	-0.47
374	SLU 27	-12	-863	4005	12.62	-2.24	-0.48
374	SLU 28	-12	-866	4021	12.7	-2.25	-0.48
374	SLU 29	-12	-855	3968	12.51	-2.22	-0.47
374	SLU 30	-12	-858	3985	12.59	-2.23	-0.47
374	SLU 31	-13	-929	4306	13.67	-2.45	-0.52
374	SLU 32	-13	-947	4390	13.87	-2.5	-0.53
374	SLU 33	-13	-950	4406	13.96	-2.51	-0.53
374	SLU 34	-13	-945	4380	13.91	-2.49	-0.53
374	SLU 35	-13	-963	4464	14.12	-2.54	-0.54
374	SLU 36	-13	-966	4480	14.2	-2.55	-0.54
374	SLU 37	-13	-955	4428	14.01	-2.52	-0.54
374	SLU 38	-13	-958	4444	14.09	-2.53	-0.54
374	SLU 39	-14	-966	4476	14.16	-2.57	-0.55
374	SLU 40	-14	-969	4492	14.25	-2.57	-0.55
374	SLU 41	-14	-982	4550	14.41	-2.61	-0.55
374	SLU 42	-14	-985	4566	14.49	-2.62	-0.56
374	SLU 43	-12	-911	4232	13.24	-2.31	-0.49
374	SLU 44	-12	-917	4259	13.39	-2.32	-0.49
374	SLU 45	-13	-935	4343	13.6	-2.37	-0.51
374	SLU 46	-13	-938	4359	13.69	-2.38	-0.51
374	SLU 47	-13	-933	4334	13.64	-2.36	-0.5
374	SLU 48	-13	-951	4418	13.84	-2.41	-0.51
374	SLU 49	-13	-954	4434	13.93	-2.42	-0.52

Nodo	Cont.	Reazione a traslazione			Reazione a rotazione		
Ind.	N.br.	x	y	z	x	y	z
374	SLU 50	-13	-943	4381	13.73	-2.39	-0.51
374	SLU 51	-13	-946	4397	13.82	-2.4	-0.51
374	SLU 52	-14	-1017	4719	14.89	-2.62	-0.56
374	SLU 53	-14	-1034	4803	15.1	-2.67	-0.57
374	SLU 54	-14	-1038	4819	15.19	-2.68	-0.57
374	SLU 55	-14	-1032	4793	15.14	-2.66	-0.57
374	SLU 56	-14	-1050	4877	15.34	-2.72	-0.58
374	SLU 57	-14	-1054	4893	15.43	-2.72	-0.58
374	SLU 58	-14	-1042	4841	15.23	-2.69	-0.57
374	SLU 59	-14	-1046	4857	15.32	-2.7	-0.57
374	SLU 60	-15	-1053	4889	15.39	-2.74	-0.58
374	SLU 61	-15	-1057	4905	15.48	-2.75	-0.58
374	SLU 62	-15	-1069	4963	15.63	-2.78	-0.59
374	SLU 63	-15	-1073	4979	15.72	-2.79	-0.59
374	SLU 64	-14	-1008	4678	14.69	-2.59	-0.55
374	SLU 65	-14	-1014	4706	14.84	-2.61	-0.56
374	SLU 66	-14	-1031	4789	15.05	-2.66	-0.57
374	SLU 67	-14	-1035	4806	15.13	-2.67	-0.57
374	SLU 68	-14	-1029	4780	15.08	-2.65	-0.56
374	SLU 69	-14	-1047	4864	15.29	-2.7	-0.57
374	SLU 70	-14	-1051	4880	15.38	-2.71	-0.58
374	SLU 71	-14	-1039	4827	15.18	-2.68	-0.57
374	SLU 72	-14	-1043	4844	15.27	-2.68	-0.57
374	SLU 73	-15	-1113	5165	16.34	-2.91	-0.62
374	SLU 74	-16	-1131	5249	16.55	-2.96	-0.63
374	SLU 75	-16	-1135	5265	16.64	-2.97	-0.63
374	SLU 76	-16	-1129	5239	16.58	-2.95	-0.63
374	SLU 77	-16	-1147	5323	16.79	-3	-0.64
374	SLU 78	-16	-1151	5339	16.88	-3.01	-0.64
374	SLU 79	-16	-1139	5287	16.68	-2.98	-0.63
374	SLU 80	-16	-1143	5303	16.77	-2.99	-0.63
374	SLU 81	-16	-1150	5335	16.84	-3.02	-0.64
374	SLU 82	-16	-1154	5351	16.92	-3.03	-0.65
374	SLU 83	-16	-1166	5409	17.08	-3.07	-0.65
374	SLU 84	-16	-1170	5425	17.17	-3.07	-0.65
374	SLE RA 1	-10	-754	3501	10.98	-1.93	-0.41
374	SLE RA 2	-10	-758	3519	11.08	-1.94	-0.41
374	SLE RA 3	-11	-770	3575	11.22	-1.97	-0.42
374	SLE RA 4	-11	-772	3586	11.28	-1.98	-0.42
374	SLE RA 5	-11	-768	3568	11.24	-1.97	-0.42
374	SLE RA 6	-11	-780	3624	11.38	-2	-0.43
374	SLE RA 7	-11	-783	3635	11.44	-2.01	-0.43
374	SLE RA 8	-11	-775	3600	11.31	-1.99	-0.42
374	SLE RA 9	-11	-777	3611	11.37	-1.99	-0.42
374	SLE RA 10	-11	-824	3825	12.08	-2.14	-0.46
374	SLE RA 11	-12	-836	3881	12.22	-2.18	-0.46
374	SLE RA 12	-12	-839	3892	12.28	-2.18	-0.46
374	SLE RA 13	-12	-835	3875	12.24	-2.17	-0.46
374	SLE RA 14	-12	-847	3931	12.38	-2.2	-0.47
374	SLE RA 15	-12	-849	3941	12.44	-2.21	-0.47
374	SLE RA 16	-12	-842	3906	12.31	-2.19	-0.47
374	SLE RA 17	-12	-844	3917	12.37	-2.19	-0.47
374	SLE RA 18	-12	-849	3938	12.41	-2.22	-0.47
374	SLE RA 19	-12	-851	3949	12.47	-2.22	-0.47
374	SLE RA 20	-12	-860	3988	12.58	-2.25	-0.48
374	SLE RA 21	-12	-862	3999	12.63	-2.25	-0.48
374	SLE FR 1	-10	-754	3501	10.98	-1.93	-0.41
374	SLE FR 2	-10	-755	3504	11	-1.93	-0.41
374	SLE FR 3	-10	-758	3521	11.05	-1.94	-0.41
374	SLE FR 4	-11	-783	3636	11.43	-2.02	-0.43
374	SLE FR 5	-11	-787	3652	11.48	-2.03	-0.43
374	SLE FR 6	-11	-801	3720	11.7	-2.08	-0.44
374	SLE QP 1	-10	-754	3501	10.98	-1.93	-0.41
374	SLE QP 2	-11	-782	3632	11.41	-2.02	-0.43
374	SLD 1	-11	-748	3427	11.6	0.73	-0.67
374	SLD 2	-11	-748	3427	11.6	0.73	-0.67
374	SLD 3	-21	-1004	4580	18.16	-0.51	-0.96
374	SLD 4	-21	-1004	4580	18.16	-0.51	-0.96
374	SLD 5	5	-384	1822	1.52	0.68	-0.05
374	SLD 6	5	-384	1822	1.52	0.68	-0.05
374	SLD 7	-30	-1237	5666	23.39	-3.44	-1.04
374	SLD 8	-30	-1237	5666	23.39	-3.44	-1.04
374	SLD 9	9	-327	1598	-0.56	-0.6	0.18
374	SLD 10	9	-327	1598	-0.56	-0.6	0.18
374	SLD 11	-27	-1181	5443	21.31	-4.72	-0.81
374	SLD 12	-27	-1181	5443	21.31	-4.72	-0.81
374	SLD 13	0	-561	2684	4.66	-3.53	0.1
374	SLD 14	0	-561	2684	4.66	-3.53	0.1
374	SLD 15	-11	-817	3837	11.22	-4.77	-0.2
374	SLD 16	-11	-817	3837	11.22	-4.77	-0.2
374	SLV 1	-10	-699	3146	11.67	4.35	-0.95
374	SLV 2	-10	-699	3146	11.67	4.35	-0.95
374	SLV 3	-37	-1308	5896	27.26	1.37	-1.67
374	SLV 4	-37	-1308	5896	27.26	1.37	-1.67
374	SLV 5	29	168	-684	-12.16	4.41	0.5
374	SLV 6	29	168	-684	-12.16	4.41	0.5
374	SLV 7	-58	-1865	8481	39.82	-5.52	-1.88
374	SLV 8	-58	-1865	8481	39.82	-5.52	-1.88
374	SLV 9	37	300	-1217	-17	1.48	1.02
374	SLV 10	37	300	-1217	-17	1.48	1.02
374	SLV 11	-51	-1732	7948	34.99	-8.45	-1.36

Nodo	Cont.	Reazione a traslazione			Reazione a rotazione		
Ind.	N.br.	x	y	z	x	y	z
374	SLV 12	-51	-1732	7948	34.99	-8.45	-1.36
374	SLV 13	15	-256	1368	-4.44	-5.41	0.81
374	SLV 14	15	-256	1368	-4.44	-5.41	0.81
374	SLV 15	-11	-866	4118	11.16	-8.39	0.09
374	SLV 16	-11	-866	4118	11.16	-8.39	0.09

1.3 Risposta modale

Modo: *identificativo del modo di vibrare.*
Periodo: *periodo. [s]*
Massa X: *massa partecipante in direzione globale X. Il valore è adimensionale.*
Massa Y: *massa partecipante in direzione globale Y. Il valore è adimensionale.*
Massa Z: *massa partecipante in direzione globale Z. Il valore è adimensionale.*
Massa rot. X: *massa rotazionale partecipante attorno la direzione globale X. Il valore è adimensionale.*
Massa rot. Y: *massa rotazionale partecipante attorno la direzione globale Y. Il valore è adimensionale.*
Massa rot. Z: *massa rotazionale partecipante attorno la direzione globale Z. Il valore è adimensionale.*
Massa sX: *massa partecipante in direzione Sisma X. Il valore è adimensionale.*
Massa sY: *massa partecipante in direzione Sisma Y. Il valore è adimensionale.*

Totale masse partecipanti:

Traslazione X: 0.864308
Traslazione Y: 0.904862
Traslazione Z: 0
Rotazione X: 0.826434
Rotazione Y: 0.91347
Rotazione Z: 0.678677

Modo	Periodo	Massa X	Massa Y	Massa Z	Massa rot. X	Massa rot. Y	Massa rot. Z	Massa sX	Massa sY
1	3.636428661	0.000000011	0.015713425	0	0.018523843	0.000000012	0.010971467	0.000000011	0.015713425
2	3.125194959	0.000000033	0.001062805	0	0.000322802	0.000000066	0.000739343	0.000000033	0.001062805
3	2.516610121	0.000000004	0.000613096	0	0.000166757	0.000000007	0.000431473	0.000000004	0.000613096
4	2.123247397	0.00000004	0.000020509	0	0.000078774	0.000000043	0.000011169	0.00000004	0.000020509
5	1.861469912	0.000035746	0.013800164	0	0.010609005	0.000025136	0.000271153	0.000035746	0.013800164
6	1.855125263	0.000026387	0.015440234	0	0.01240734	0.000021327	0.032460222	0.000026387	0.015440234
7	1.546366219	0.000075257	0.001563317	0	0.001593709	0.000084194	0.002456113	0.000075257	0.001563317
8	1.51813352	0.003134868	0.015448795	0	0.013972147	0.003620506	0.034629545	0.003134868	0.015448795
9	1.482025212	0.004109424	0.004329351	0	0.004116498	0.005059874	0.000227962	0.004109424	0.004329351
10	1.411259952	0.002710613	0.008532311	0	0.005935307	0.005254168	0.017585459	0.002710613	0.008532311
11	1.399416272	0.000014411	0.016176727	0	0.016352913	0.000102315	0.010121793	0.000014411	0.016176727
12	1.380813768	0.002846041	0.002379092	0	0.000729108	0.002250543	0.000440157	0.002846041	0.002379092
13	1.357464364	0.000168121	0.011505025	0	0.014547252	0.000190836	0.008803108	0.000168121	0.011505025
14	1.32021635	0.005926773	0.003051962	0	0.00386056	0.006143398	0.001415921	0.005926773	0.003051962
15	1.234930012	0.002682608	0.036060992	0	0.023636687	0.002744215	0.061449434	0.002682608	0.036060992
16	1.227187402	0.003944761	0.058838977	0	0.058216976	0.004169559	0.010487788	0.003944761	0.058838977
17	1.184291282	0.007700095	0.000906389	0	0.000001336	0.005156634	0.001109884	0.007700095	0.000906389
18	1.157856598	0.000044445	0.023383329	0	0.009641506	0.000078098	0.02526907	0.000044445	0.023383329
19	1.081316836	0.006965546	0.012460579	0	0.00982068	0.003719572	0.001871202	0.006965546	0.012460579
20	1.010905635	0.000206694	0.014023678	0	0.008917759	0.000073667	0.01048367	0.000206694	0.014023678
21	0.909771062	0.001527972	0.01623965	0	0.006044047	0.000047162	0.012535529	0.001527972	0.01623965
22	0.877648676	0.000831037	0.069143437	0	0.055224736	0.00016397	0.036539169	0.000831037	0.069143437
23	0.762882606	0.030027043	0.000176105	0	0.001197293	0.022757215	0.000439298	0.030027043	0.000176105
24	0.747780781	0.000147949	0.051037612	0	0.018672441	0.0000727	0.032070758	0.000147949	0.051037612
25	0.700936112	0.038343781	0.000023181	0	0.000265677	0.032168617	0.000000736	0.038343781	0.000023181
26	0.613716782	0.002759715	0.035026688	0	0.012145582	0.001717061	0.034062537	0.002759715	0.035026688
27	0.572082553	0.041813598	0.00036276	0	0.0002233	0.032966697	0.002635589	0.041813598	0.00036276
28	0.439228729	0.000359497	0.063512915	0	0.035022936	0.000257102	0.043361384	0.000359497	0.063512915
29	0.408369909	0.017011942	0.001511262	0	0.000250115	0.002562232	0.000759479	0.017011942	0.001511262
30	0.280799041	0.000368435	0.190920467	0	0.311596286	0.000327467	0.139306946	0.000368435	0.190920467
31	0.207786841	0.254368083	0.000074886	0	0.000019882	0.368526729	0.000002338	0.254368083	0.000074886
32	0.155924462	0.000010725	0.221104679	0	0.16995043	0.00001766	0.136484888	0.000010725	0.221104679
33	0.140920198	0.428194248	0.000327516	0	0.000299549	0.410508575	0.004259235	0.428194248	0.000327516
34	0.047946597	0.007940992	0.000089799	0	0.001895147	0.002680852	0.002319434	0.007940992	0.000089799
35	0.030753253	0.000011549	0.000000317	0	0.000175261	0.000001782	0.002663716	0.000011549	0.000000317

1.4 Equilibrio globale forze

Contributo: *Nome attribuito al sistema risultante.*
Fx: *Componente X di forza del sistema risultante. [daN]*
Fy: *Componente Y di forza del sistema risultante. [daN]*
Fz: *Componente Z di forza del sistema risultante. [daN]*
Mx: *Componente di momento attorno l'asse X del sistema risultante. [daN*m]*
My: *Componente di momento attorno l'asse Y del sistema risultante. [daN*m]*
Mz: *Componente di momento attorno l'asse Z del sistema risultante. [daN*m]*

Bilancio in condizione di carico: Pesi strutturali

Contributo	Fx	Fy	Fz	Mx	My	Mz
Forze applicate	-122.533	-228.406	-1264295.563	-1286353.93	-15630493.6	2156.5
Reazioni	122.533	228.406	1264295.563	1286353.93	15630493.6	-2156.5

Contributo	Fx	Fy	Fz	Mx	My	Mz
P-Delta	0	0	0	0	0	0
Totale	0	0	0	0	0	0

Bilancio in condizione di carico: Permanenti portati

Contributo	Fx	Fy	Fz	Mx	My	Mz
Forze applicate	0	0	-278540.933	-365778.49	-3445424.51	0
Reazioni	0	0	278540.933	365778.49	3445424.51	0
P-Delta	0	0	0	0	0	0
Totale	0	0	0	0	0	0

Bilancio in condizione di carico: Variabile A

Contributo	Fx	Fy	Fz	Mx	My	Mz
Forze applicate	0	0	-205456.091	-236362.13	-2539757.73	0
Reazioni	0	0	205456.091	236362.13	2539757.73	0
P-Delta	0	0	0	0	0	0
Totale	0	0	0	0	0	0

Bilancio in condizione di carico: Neve

Contributo	Fx	Fy	Fz	Mx	My	Mz
Forze applicate	0	0	-35205.871	-47884.2	-430552.31	0
Reazioni	0	0	35205.871	47884.2	430552.31	0
P-Delta	0	0	0	0	0	0
Totale	0	0	0	0	0	0

Bilancio in condizione di carico: Variabile H

Contributo	Fx	Fy	Fz	Mx	My	Mz
Forze applicate	0	0	-26713.804	-38080.8	-328266.18	0
Reazioni	0	0	26713.804	38080.8	328266.18	0
P-Delta	0	0	0	0	0	0
Totale	0	0	0	0	0	0

Bilancio in condizione di carico: Vento

Contributo	Fx	Fy	Fz	Mx	My	Mz
Forze applicate	0	-5906.221	0	44834.93	0	73268.97
Reazioni	0	5906.221	0	-44834.93	0	-73268.97
P-Delta	0	0	0	0	0	0
Totale	0	0	0	0	0	0

Bilancio in condizione di carico: Sisma X SLV

Contributo	Fx	Fy	Fz	Mx	My	Mz
Forze applicate	441444.007	0	0	0	4532179.64	-483909.01
Reazioni	-441444.007	0	0	0	-4532179.64	483909.01
P-Delta	0	0	0	0	0	0
Totale	0	0	0	0	0	0

Bilancio in condizione di carico: Sisma Y SLV

Contributo	Fx	Fy	Fz	Mx	My	Mz
Forze applicate	0	457672.795	0	-4698795.98	0	-5661163.22
Reazioni	0	-457672.795	0	4698795.98	0	5661163.22
P-Delta	0	0	0	0	0	0
Totale	0	0	0	0	0	0

Bilancio in condizione di carico: Sisma X SLD

Contributo	Fx	Fy	Fz	Mx	My	Mz
Forze applicate	194951.126	0	0	0	2001507.58	-213704.58
Reazioni	-194951.126	0	0	0	-2001507.58	213704.58
P-Delta	0	0	0	0	0	0
Totale	0	0	0	0	0	0

Bilancio in condizione di carico: Sisma Y SLD

Contributo	Fx	Fy	Fz	Mx	My	Mz
Forze applicate	0	197439.345	0	-2027053.41	0	-2442217.16
Reazioni	0	-197439.345	0	2027053.41	0	2442217.16
P-Delta	0	0	0	0	0	0
Totale	0	0	0	0	0	0

Bilancio in condizione di carico: Rig Ux

Contributo	Fx	Fy	Fz	Mx	My	Mz
Forze applicate	0	0	0	0	0	0
Reazioni	0	0	0	0	0	0
P-Delta	0	0	0	0	0	0
Totale	0	0	0	0	0	0

Bilancio in condizione di carico: Rig Uy

Contributo	Fx	Fy	Fz	Mx	My	Mz
Forze applicate	0	0	0	0	0	0
Reazioni	0	0	0	0	0	0
P-Delta	0	0	0	0	0	0
Totale	0	0	0	0	0	0

Bilancio in condizione di carico: Rig Rz

Contributo	Fx	Fy	Fz	Mx	My	Mz
Forze applicate	0	0	0	0	0	0
Reazioni	0	0	0	0	0	0
P-Delta	0	0	0	0	0	0
Totale	0	0	0	0	0	0

1.5 Risposta di spettro

Spettro: condizione elementare corrispondente allo spettro.
N.b.: nome breve della condizione elementare.
Fx: componente della forza lungo l'asse X. [daN]
Fy: componente della forza lungo l'asse Y. [daN]
Fz: componente della forza lungo l'asse Z. [daN]
*Mx: componente della coppia attorno all'asse X. [daN*m]*
*My: componente della coppia attorno all'asse Y. [daN*m]*
*Mz: componente della coppia attorno all'asse Z. [daN*m]*
Max X: massima reazione lungo l'asse X.
Valore: valore massimo della reazione. [daN]
Angolo: angolo d'ingresso del sisma che provoca il valore massimo della reazione. [deg]
Max Y: massima reazione lungo l'asse Y.
Valore: valore massimo della reazione. [daN]
Angolo: angolo d'ingresso del sisma che provoca il valore massimo della reazione. [deg]
Max Z: massima reazione lungo l'asse Z.
Valore: valore massimo della reazione. [daN]
Angolo: angolo d'ingresso del sisma che provoca il valore massimo della reazione. [deg]

Spettro	Fx	Fy	Fz	Mx	My	Mz	Max X		Max Y		Max Z	
N.b.							Valore	Angolo	Valore	Angolo	Valore	Angolo
SLV X	272194.47	9463.21	0	8.148E04	2.446E06	3.465E05	272222.62	1	175242.19	90	0	0
SLV Y	9463.21	175242.19	0	1.550E06	7.795E04	2.127E06	272222.62	1	175242.19	90	0	0
X SLD	118903.2	4044.98	0	3.494E04	1.066E06	1.522E05	118916.85	1	74575.83	90	0	0
Y SLD	4044.98	74575.83	0	6.613E05	3.352E04	9.048E05	118916.85	1	74575.83	90	0	0

1.6 Annotazioni solutore

Informazioni: informazioni fornite dal solutore al termine del calcolo del modello.

Informazioni

1.7 Statistiche soluzione

Tipo di equazioni	Lineari
Tecnica di soluzione	Intel MKL PARDISO
Numero equazioni	103926
Elemento min. diagonale	428.41410744
Elemento max diagonale	7856197280.43324
Rapporto max/min	18337858.497343
Elementi non nulli	4224750

2 Verifiche

2.1 Verifica regolarità strutturale

Le unità di misura elencate nel capitolo sono in [m, daN] ove non espressamente specificato.

Livello:
Descr: descrizione livello.
Quota: quota livello. [m]
Q: quota livello. [m]
Qinf: quota livello precedente. [m]
Comb: combinazione.
A1: a1 (Distribuzione masse).
A1n: a1 numeratore (distanza tra centro massa vs. centro rigidezza [se presente] o centro dell'ingombro del piano). [m]
A1d: a1 denominatore (ingombro del piano nella medesima direzione [x o y globale]). [m]
A1r: a1 rapporto (distanza centro massa/rigidezza su ingombro del piano).
A2: a2 (Distribuzione rigidezze).
A2n: a2 numeratore (rigidezza max [x o y globale]).
A2d: a2 denominatore (rigidezza min [x o y globale]).
A2r: a2 rapporto (rigidezza max/min).
A3: a3 (Forma compatta).
A3n: a3 numeratore (area convessa). [m²]
A3d: a3 denominatore (area piano). [m²]

A3r: a3 rapporto (area convessa/area piano).
B: b (Rapporto lati).
Bn: b numeratore (lato max [x o y globale]). [m]
Bd: b denominatore (lato min [x o y globale]). [m]
Br: b rapporto (lato max/min).
C: c (Rapporto rigidezze piano).
Cn: c numeratore (rigidezza elementi verticali).
Cd: c denominatore (rigidezza piano).
Cr: c rapporto (rigidezza elementi verticali/rigidezza piano).
E1: e1 (Variazione masse).
E1n: e1 numeratore (massa max). [daN]
E1d: e1 denominatore (massa min). [daN]
E1r: e1 rapporto (massa max/min).
E2: e2 (Riduzione rigidezze).
E2n: e2 numeratore (rigidezza relativa alla traslazione KUmax). [daN/m]
E2d: e2 denominatore (rigidezza relativa alla traslazione KUmin). [daN/m]
E2r: e2 rapporto (variazione massima in decremento Kmax/Kmin).
E3: e3 (Incremento rigidezze).
E3n: e3 numeratore (rigidezza relativa alla traslazione KUmax). [daN/m]
E3d: e3 denominatore (rigidezza relativa alla traslazione KUmin). [daN/m]
E3r: e3 rapporto (variazione massima in incremento Kmax/Kmin).
F: f (Rapporto Capacità/Domanda).
Fn: f numeratore (rapporto capacità/domanda massimo [c/d max]). [daN]
Fd: f denominatore (rapporto capacità/domanda minimo [c/d min]). [daN]
Fr: f rapporto (variazione massima [rapporto (c/d max)/(c/d min)]).
G1: g1 (Rastremazione di piano).
G1n: g1 numeratore (L1). [m]
G1d: g1 denominatore (L2). [m]
G1r: g1 rapporto (L1/L2).
G2: g2 (Rastremazione totale).
G2n: g2 numeratore (L0). [m]
G2d: g2 denominatore (Li). [m]
G2r: g2 rapporto (L0/Li).
Capacità/Domanda in X:
VrdX: taglio resistente complessivo in direzione X. [daN]
VedX: taglio agente complessivo in direzione X). [daN]
|Rd/Ed|: |Rd/Ed| (rapporto capacità/domanda in termini di resistenza a taglio).
Capacità/Domanda in Y:
VrdY: taglio resistente complessivo in direzione Y. [daN]
VedY: taglio agente complessivo in direzione Y). [daN]

Verifica regolarità strutturale

Controllo regolarità edificio secondo D.M. 17-01-18 (N.T.C.) §7.2.1 - §C7.2.1

Avvertenze

La seguente procedura valuta la regolarità della costruzione secondo quanto indicato nelle NTC 2018 §7.2.1.
Tali valutazioni sono a carattere puramente informativo e vengono condotte sulla base del modello e delle verifiche presenti alla sua generazione, con le limitazioni indicate nella manualistica.
In ogni caso l'impostazione di regolarità della costruzione, in pianta ed elevazione, va indicata nelle preferenze di analisi dall'utente utilizzatore del software.

Sintesi dei risultati

Orizzontamenti considerati nella valutazione
Nessun livello di fondazione trovato
Livelli di elevazione considerati: Terra(L2), Rialzato(L3), Primo(L4), Secondo(L5), Terzo(L6), Sottotetto(L7), Colmo maggiore(L9),

Regolarità in pianta - NO
L'edificio risulta NON regolare in pianta, in base alle condizioni indicate in NTC 2018 §7.2.1
N.V. - Criterio A1 (Distribuzione masse) non valutabile al livello Terra
N.V. - Criterio A2 (Distribuzione rigidezze) non valutabile al livello Terra
No - Criterio A3 (Forma compatta) NON rispettato, con rapporto massimo 2724620.4/2531574.5=1.1 (limite=1,05) al livello Terzo
Ok - Criterio B (Rapporto lati) rispettato, con rapporto massimo 2,14 (limite=4) al livello Rialzato
No - Criterio C (Rapporto rigidezze piano) NON rispettato, con rapporto massimo > 999 (limite=0) al livello Terra

Regolarità in altezza - NO
L'edificio risulta NON regolare in altezza, in base alle condizioni indicate in NTC 2018 §7.2.1
Ok - Criterio D (Altezza elementi sismoresistenti) rispettato, con rapporto massimo 1 (limite=1,01)
No - Criterio E1 (Variazione masse) NON rispettato, con rapporto massimo 177043/15927.7=11.1 (limite=1) tra il livello Rialzato ed il precedente
N.V. - Criterio E2 (Riduzione rigidezze) non valutabile tra il livello Rialzato ed il precedente
N.V. - Criterio E3 (Incremento rigidezze) non valutabile tra il livello Rialzato ed il precedente
N.V. - Criterio F (Rapporto Capacità/Domanda) non valutabile tra il livello Colmo maggiore ed il precedente
No - Criterio G1 (Rastremazione di piano) NON rispettato, con rapporto massimo 1111.6/276=4 (limite=0,1) tra il livello Rialzato ed il precedente
No - Criterio G2 (Rastremazione totale) NON rispettato, con rapporto massimo 1111.6/276=4 (limite=0,3) tra il livello Rialzato ed il precedente

Valori per piano

Verifiche di regolarità in pianta

Livello		A1			A2			A3			B			C		
Descr	Quota	A1n	A1d	A1r	A2n	A2d	A2r	A3n	A3d	A3r	Bn	Bd	Br	Cn	Cd	Cr
Terra	0							14.3988	28.4071	0.51	5.53	2.76	2	9999	1	9999
Rialzato	0.67							276.5958	258.1602	1.07	24.96	11.66	2.14	9999	1	9999
Primo	4.35							272.462	253.158	1.08	24.79	11.61	2.14	9999	1	9999
Secondo	7.9							272.462	253.1583	1.08	24.79	11.61	2.14	9999	1	9999
Terzo	11.45							272.462	253.1574	1.08	24.79	11.61	2.14	9999	1	9999
Sottotetto	14.6							278.1128	263.2433	1.06	24.91	11.76	2.12	9999	1	9999
Colmo maggiore	17.11							278.1128	263.1733	1.06	24.91	11.76	2.12	9999	1	9999

Verifiche di regolarità in elevazione

Rapporto di regolarità per la condizione D (Altezza elementi sismoresistenti): 17.11/17.11=0.01.

Livello			E1			E2			E3			F			G1			G2		
Descr	Q	Qinf	E1n	E1d	E1r	E2n	E2d	E2r	E3n	E3d	E3r	Fn	Fd	Fr	G1n	G1d	G1r	G2n	G2d	G2r
Rialzato	0.67	0	177043	15928	11.12							3.3	0	176.09	11.12	2.76	4.03	11.12	2.76	4.03
Primo	4.35	0.67	177043	133854	1.32							3.4	2.2	1.53	0.08	24.96	0	11.02	2.76	3.99
Secondo	7.9	4.35	133854	133854	1							3.6	2.6	1.36	0	11.61	0	11.02	2.76	3.99
Terzo	11.45	7.9	133854	133854	1							4.4	3.3	1.35	0	11.61	0	11.02	2.76	3.99
Sottotetto	14.6	11.45	133854	132971	1.01							10.8	4.4	2.45	0.03	24.79	0	11.06	2.76	4.01
Colmo maggiore	17.11	14.6	132971	72724	1.83										0	11.76	0	0	0.01	0

Dettaglio delle resistenze di piano a taglio (per valutazione punto F)

Livello			Capacità/Domanda in X			Capacità/Domanda in Y		
Descr	Q	Comb	VrdX	VedX	|Rd/Ed|	VrdY	VedY	|Rd/Ed|
Terra	0	SLV 1	17052	-435189	0	20549	-85954	0.2
Terra	0	SLV 2	17052	-435189	0	20549	-85954	0.2
Terra	0	SLV 3	14794	-436836	0	20026	80406	0.2
Terra	0	SLV 4	14794	-436836	0	20026	80406	0.2
Terra	0	SLV 5	19507	-128144	0.2	20549	-278257	0.1
Terra	0	SLV 6	19507	-128144	0.2	20549	-278257	0.1
Terra	0	SLV 7	11981	-133635	0.1	15061	276275	0.1
Terra	0	SLV 8	11981	-133635	0.1	15061	276275	0.1
Terra	0	SLV 9	19354	133390	0.1	20549	-276729	0.1
Terra	0	SLV 10	19354	133390	0.1	20549	-276729	0.1
Terra	0	SLV 11	2387	127899	0	14464	277804	0.1
Terra	0	SLV 12	2387	127899	0	14464	277804	0.1
Terra	0	SLV 13	16541	436591	0	20549	-80859	0.3
Terra	0	SLV 14	16541	436591	0	20549	-80859	0.3
Terra	0	SLV 15	12987	434944	0	18236	85501	0.2
Terra	0	SLV 16	12987	434944	0	18236	85501	0.2
Rialzato	0.67	SLV 1	362795	-415658	0.9	269153	-87252	3.1
Rialzato	0.67	SLV 2	362795	-415658	0.9	269153	-87252	3.1
Rialzato	0.67	SLV 3	368272	-434227	0.8	253950	90546	2.8
Rialzato	0.67	SLV 4	368272	-434227	0.8	253950	90546	2.8
Rialzato	0.67	SLV 5	349260	-96615	3.6	263913	-295989	0.9
Rialzato	0.67	SLV 6	349260	-96615	3.6	263913	-295989	0.9
Rialzato	0.67	SLV 7	327564	-158511	2.1	236917	296673	0.8
Rialzato	0.67	SLV 8	327564	-158511	2.1	236917	296673	0.8
Rialzato	0.67	SLV 9	347356	158282	2.2	254631	-297108	0.9
Rialzato	0.67	SLV 10	347356	158282	2.2	254631	-297108	0.9
Rialzato	0.67	SLV 11	316723	96386	3.3	232115	295554	0.8
Rialzato	0.67	SLV 12	316723	96386	3.3	232115	295554	0.8
Rialzato	0.67	SLV 13	368578	433998	0.8	252999	-90981	2.8
Rialzato	0.67	SLV 14	368578	433998	0.8	252999	-90981	2.8
Rialzato	0.67	SLV 15	361809	415429	0.9	244325	86817	2.8
Rialzato	0.67	SLV 16	361809	415429	0.9	244325	86817	2.8
Primo	4.35	SLV 1	234823	-259373	0.9	160664	-47550	3.4
Primo	4.35	SLV 2	234823	-259373	0.9	160664	-47550	3.4
Primo	4.35	SLV 3	227396	-255360	0.9	155388	56775	2.7
Primo	4.35	SLV 4	227396	-255360	0.9	155388	56775	2.7
Primo	4.35	SLV 5	237935	-83899	2.8	159526	-172494	0.9
Primo	4.35	SLV 6	237935	-83899	2.8	159526	-172494	0.9
Primo	4.35	SLV 7	221519	-70523	3.1	156102	175257	0.9
Primo	4.35	SLV 8	221519	-70523	3.1	156102	175257	0.9
Primo	4.35	SLV 9	236658	70520	3.4	153639	-175264	0.9
Primo	4.35	SLV 10	236658	70520	3.4	153639	-175264	0.9
Primo	4.35	SLV 11	220148	83896	2.6	153718	172487	0.9
Primo	4.35	SLV 12	220148	83896	2.6	153718	172487	0.9
Primo	4.35	SLV 13	235022	255358	0.9	157296	-56782	2.8
Primo	4.35	SLV 14	235022	255358	0.9	157296	-56782	2.8
Primo	4.35	SLV 15	227961	259371	0.9	154489	47543	3.2
Primo	4.35	SLV 16	227961	259371	0.9	154489	47543	3.2
Secondo	7.9	SLV 1	217247	-201907	1.1	139493	-42430	3.3
Secondo	7.9	SLV 2	217247	-201907	1.1	139493	-42430	3.3
Secondo	7.9	SLV 3	211447	-200870	1.1	133630	39563	3.4
Secondo	7.9	SLV 4	211447	-200870	1.1	133630	39563	3.4
Secondo	7.9	SLV 5	217717	-62145	3.5	137997	-137087	1
Secondo	7.9	SLV 6	217717	-62145	3.5	137997	-137087	1
Secondo	7.9	SLV 7	221606	-58687	3.8	138295	136222	1
Secondo	7.9	SLV 8	221606	-58687	3.8	138295	136222	1
Secondo	7.9	SLV 9	216679	58688	3.7	136184	-136229	1
Secondo	7.9	SLV 10	216679	58688	3.7	136184	-136229	1
Secondo	7.9	SLV 11	222194	62147	3.6	138972	137080	1
Secondo	7.9	SLV 12	222194	62147	3.6	138972	137080	1
Secondo	7.9	SLV 13	216650	200871	1.1	140905	-39570	3.6
Secondo	7.9	SLV 14	216650	200871	1.1	140905	-39570	3.6
Secondo	7.9	SLV 15	205855	201909	1	139266	42423	3.3

Livello			Capacità/Domanda in X			Capacità/Domanda in Y		
Descr	Q	Comb	VrdX	VedX	|Rd/Ed|	VrdY	VedY	|Rd/Ed|
Secondo	7.9	SLV 16	205855	201909	1	139266	42423	3.3
Terzo	11.45	SLV 1	177864	-137813	1.3	118797	-26707	4.4
Terzo	11.45	SLV 2	177864	-137813	1.3	118797	-26707	4.4
Terzo	11.45	SLV 3	171053	-138539	1.2	118458	30812	3.8
Terzo	11.45	SLV 4	171053	-138539	1.2	118458	30812	3.8
Terzo	11.45	SLV 5	188404	-40243	4.7	108417	-95252	1.1
Terzo	11.45	SLV 6	188404	-40243	4.7	108417	-95252	1.1
Terzo	11.45	SLV 7	187905	-42662	4.4	112882	96479	1.2
Terzo	11.45	SLV 8	187905	-42662	4.4	112882	96479	1.2
Terzo	11.45	SLV 9	188874	42663	4.4	109789	-96486	1.1
Terzo	11.45	SLV 10	188874	42663	4.4	109789	-96486	1.1
Terzo	11.45	SLV 11	183499	40244	4.6	115097	95245	1.2
Terzo	11.45	SLV 12	183499	40244	4.6	115097	95245	1.2
Terzo	11.45	SLV 13	178801	138540	1.3	113684	-30819	3.7
Terzo	11.45	SLV 14	178801	138540	1.3	113684	-30819	3.7
Terzo	11.45	SLV 15	168802	137815	1.2	115732	26700	4.3
Terzo	11.45	SLV 16	168802	137815	1.2	115732	26700	4.3
Sottotetto	14.6	SLV 1	119298	-40520	2.9	67718	-8132	8.3
Sottotetto	14.6	SLV 2	119298	-40520	2.9	67718	-8132	8.3
Sottotetto	14.6	SLV 3	115075	-40168	2.9	63890	13133	4.9
Sottotetto	14.6	SLV 4	115075	-40168	2.9	63890	13133	4.9
Sottotetto	14.6	SLV 5	126267	-12689	10	70236	-34641	2
Sottotetto	14.6	SLV 6	126267	-12689	10	70236	-34641	2
Sottotetto	14.6	SLV 7	124318	-11517	10.8	41994	36244	1.2
Sottotetto	14.6	SLV 8	124318	-11517	10.8	41994	36244	1.2
Sottotetto	14.6	SLV 9	115751	11517	10.1	69678	-36097	1.9
Sottotetto	14.6	SLV 10	115751	11517	10.1	69678	-36097	1.9
Sottotetto	14.6	SLV 11	124834	12689	9.8	53202	34788	1.5
Sottotetto	14.6	SLV 12	124834	12689	9.8	53202	34788	1.5
Sottotetto	14.6	SLV 13	109103	40168	2.7	65111	-12987	5
Sottotetto	14.6	SLV 14	109103	40168	2.7	65111	-12987	5
Sottotetto	14.6	SLV 15	112726	40520	2.8	61216	8279	7.4
Sottotetto	14.6	SLV 16	112726	40520	2.8	61216	8279	7.4

2.2 Verifica sismica globale

Desc.: *descrizione.*
Stato limite: *(muratura) V=Taglio; PF=Pressoflessione; PFFP=Pressoflessione fuori piano; R=Ribaltamento.*
Molt.: *moltiplicatore minimo della azione sismica che produce lo stato limite.*
Comb.: *combinazione.*
PGA: *accelerazione al suolo.*
iPGA (ζE): *indicatore di rischio sismico in termini di PGA ovvero rapporto tra l'azione sismica massima sopportabile dall'elemento e l'azione sismica massima che si utilizzerebbe nel progetto nuovo (§C8.3).*
TR: *tempo di ritorno.*
(TR/TRrif)^.41: *indicatore di rischio sismico in termini di periodo di ritorno.*
fa: *fattore di accelerazione.*
Stato limite: *(muratura) V=Taglio; PF=Presso flessione; PFFP=Pressoflessione fuori piano; R=Ribaltamento.*
Coeff.s.: *coefficiente minimo prodotto dallo stato limite.*
Verifica: *stato di verifica.*
Maschio: *maschio.*
Stato limite: *(maschio muratura) V=Taglio; PF=Presso flessione; PFFP=Presso flessione fuori piano; R=Ribaltamento.*
Trave: *trave di collegamento in muratura.*
Stato limite: *(trave muratura) V=Taglio; F=Flessione.*
S. L.: *stato limite di riferimento.*
TR,C: *periodo di ritorno di capacità.*
PGA,C: *accelerazione di aggancio di capacità.*
TR,Rif: *periodo di ritorno di riferimento.*
PGA,Rif: *accelerazione di aggancio di riferimento.*
Tipo rottura: *tipo di rottura che fornisce il valore minimo degli elementi considerati.*
PAM: *perdita media annua attesa.*
Classe PAM: *classe di rischio PAM.*
IS-V: *indice di sicurezza.*
Classe IS-V: *classe di rischio IS-V.*

Verifica di elementi dotati di indicatori di rischio sismico mediante analisi con fattore q

Verifiche condotte secondo D.M. 17-01-18 (N.T.C.) § C8.7.1

Accelerazioni e tempi di ritorno

Accelerazione di aggancio SLO (ag/g_SLO*S*ST) PGA,SLOrif = 0.081
Accelerazione di aggancio SLD (ag/g_SLD*S*ST) PGA,SLDrif = 0.101
Accelerazione di aggancio SLV (ag/g_SLV*S*ST) PGA,SLVrif = 0.244
Tr,SLOrif = 30 anni
Tr,SLDrif = 50 anni
Tr,SLVrif = 475 anni

Moltiplicatori minimi delle condizioni sismiche

(Il valore di ζE corrisponde al valore di I.R. PGA secondo quanto riportato nella Circolare 7 21-01-19 §C8.3)

Rottura a taglio

Moltiplicatore: 0
Maschio 18
Lunghezza: 0.304; altezza: 2.7; spessore: 0.3; sezione a quota: 0.67
Combinazione SLV 1 N= 5 V par.= 0 l'= 0 fvd= 8333 Vt scorrimento= 0 Vt fess. diag.= 0
Tempo di ritorno 0 anni
Indicatore iTr=(Tr/Tr,SLVrif)^.41 = 0
PGA 0
Indicatore iPGA=PGA/PGA,SLVrif = 0
Fattore di accelerazione fa = 0

Rottura a flessione

Moltiplicatore: 0
Maschio 18
Lunghezza: 0.304; altezza: 2.7; spessore: 0.3 sezione a quota 0.67
Combinazione SLV 1 N = 5 M = -0.74 σ0 = 0 fd = 143750 Mu = 0
Tempo di ritorno 0 anni
Indicatore iTr=(Tr/Tr,SLVrif)^.41 = 0
PGA 0
Indicatore iPGA=PGA/PGA,SLVrif = 0
Fattore di accelerazione fa = 0

Rottura a pressoflessione nel piano ortogonale

Moltiplicatore: 0.079
Maschio 272
Lunghezza: 0.245; altezza: 3.177; spessore: 0.3; sezione a quota: 13.008
Combinazione SLV 11 fd= 143750 Ta= 0.06 Wa= 540 N= -21 M= 2.3 Mc= 3.1
Tempo di ritorno 0 anni
Indicatore iTr=(Tr/Tr,SLVrif)^.41 = 0
PGA 0
Indicatore iPGA=PGA/PGA,SLVrif = 0
Fattore di accelerazione fa = 0

Rottura per meccanismi locali di collasso

Moltiplicatore: 0
Maschio 18
Lunghezza: 0.304; altezza: 2.7; spessore: 0.3 f.agg.= 0 a.lim.= 0
Combinazione SLV 1 N top= 5 N base= -300 T orto= 0 α0= 0 M*= 0 e*= 0 a0*= 0
Tempo di ritorno 0 anni
Indicatore iTr=(Tr/Tr,SLVrif)^.41 = 0
PGA 0
Indicatore iPGA=PGA/PGA,SLVrif = 0
Fattore di accelerazione fa = 0

Indicatori minimi riferiti al solo materiale muratura

Desc.	Stato limite	Molt.	Comb.	PGA	iPGA (ζE)	TR	(TR/TRrif)^.41	fa
Maschio 18	PF	0	SLV 1	0	0	0	0	0
Maschio 18	V	0	SLV 1	0	0	0	0	0
Maschio 272	PFFP	0.079	SLV 11	0	0	0	0	0
Maschio 18	R	0	SLV 1	0	0	0	0	0
Trave di accoppiamento 7	PF	0	SLV 1	0	0	0	0	0
Trave di accoppiamento 1	V	0	SLV 1	0	0	0	0	0

Coefficienti di sicurezza riferiti al solo materiale muratura

Desc.	Stato limite	Coeff.s.	Comb.	Verifica
Maschio 1	PF SLU	9.976	SLU 81	Si
Maschio 1	V SLU	23.725	SLU 2	Si
Maschio 1	PF	2.043	SLV 9	Si
Maschio 1	V	1.057	SLV 9	Si
Maschio 1	PFFP	16.778	SLV 15	Si
Maschio 1	R	0.35	SLV 1	No
Maschio 2	PF SLU	7.457	SLU 82	Si
Maschio 2	V SLU	22.212	SLU 38	Si
Maschio 2	PF	1.182	SLV 9	Si
Maschio 2	V	0.431	SLV 13	No
Maschio 2	PFFP	5.557	SLV 9	Si
Maschio 2	R	0.255	SLV 5	No
Maschio 3	PF SLU	12.139	SLU 79	Si
Maschio 3	V SLU	2.941	SLU 77	Si
Maschio 3	PF	2.857	SLV 13	Si
Maschio 3	V	0.676	SLV 13	No
Maschio 3	PFFP	22.301	SLV 9	Si
Maschio 3	R	0.289	SLV 9	No
Maschio 4	PF SLU	13.299	SLU 84	Si
Maschio 4	V SLU	3.697	SLU 82	Si
Maschio 4	PF	1.417	SLV 5	Si
Maschio 4	V	0.498	SLV 5	No
Maschio 4	PFFP	16.373	SLV 9	Si
Maschio 4	R	0.23	SLV 15	No
Maschio 5	PF SLU	4.353	SLU 82	Si
Maschio 5	V SLU	10.56	SLU 84	Si

Desc.	Stato limite	Coeff.s.	Comb.	Verifica
Maschio 5	PF	0	SLV 7	No
Maschio 5	V	0	SLV 7	No
Maschio 5	PFFP	9.466	SLV 3	Si
Maschio 5	R	0.117	SLV 15	No
Maschio 6	PF SLU	9.224	SLU 48	Si
Maschio 6	V SLU	5.307	SLU 5	Si
Maschio 6	PF	0	SLV 12	No
Maschio 6	V	0	SLV 7	No
Maschio 6	PFFP	4.318	SLV 11	Si
Maschio 6	R	0	SLV 12	No
Maschio 7	PF SLU	5.028	SLU 77	Si
Maschio 7	V SLU	3.756	SLU 79	Si
Maschio 7	PF	0	SLV 11	No
Maschio 7	V	0	SLV 11	No
Maschio 7	PFFP	12.088	SLV 11	Si
Maschio 7	R	0	SLV 12	No
Maschio 8	PF SLU	0.603	SLU 84	No
Maschio 8	V SLU	2.915	SLU 81	Si
Maschio 8	PF	1.194	SLV 9	Si
Maschio 8	V	0.836	SLV 15	No
Maschio 8	PFFP	28.986	SLV 7	Si
Maschio 8	R	0	SLV 7	No
Maschio 9	PF SLU	0.555	SLU 83	No
Maschio 9	V SLU	0.808	SLU 81	No
Maschio 9	PF	0	SLV 11	No
Maschio 9	V	0	SLV 11	No
Maschio 9	PFFP	39.327	SLV 7	Si
Maschio 9	R	0	SLV 1	No
Maschio 10	PF SLU	4.363	SLU 83	Si
Maschio 10	V SLU	4.929	SLU 2	Si
Maschio 10	PF	1.593	SLV 7	Si
Maschio 10	V	0.884	SLV 7	No
Maschio 10	PFFP	24.858	SLV 11	Si
Maschio 10	R	0.203	SLV 1	No
Maschio 11	PF SLU	2.699	SLU 41	Si
Maschio 11	V SLU	19.825	SLU 5	Si
Maschio 11	PF	0	SLV 5	No
Maschio 11	V	0	SLV 5	No
Maschio 11	PFFP	12.544	SLV 11	Si
Maschio 11	R	0.204	SLV 9	No
Maschio 12	PF SLU	7.629	SLU 84	Si
Maschio 12	V SLU	2.178	SLU 84	Si
Maschio 12	PF	0	SLV 11	No
Maschio 12	V	0	SLV 11	No
Maschio 12	PFFP	4.256	SLV 11	Si
Maschio 12	R	0.131	SLV 9	No
Maschio 13	PF SLU	11.946	SLU 51	Si
Maschio 13	V SLU	4.621	SLU 84	Si
Maschio 13	PF	0	SLV 11	No
Maschio 13	V	0	SLV 11	No
Maschio 13	PFFP	7.014	SLV 15	Si
Maschio 13	R	0.147	SLV 3	No
Maschio 14	PF SLU	4.206	SLU 84	Si
Maschio 14	V SLU	0.734	SLU 83	No
Maschio 14	PF	1.408	SLV 7	Si
Maschio 14	V	0.513	SLV 9	No
Maschio 14	PFFP	11.292	SLV 7	Si
Maschio 14	R	0.335	SLV 13	No
Maschio 15	PF SLU	0.381	SLU 84	No
Maschio 15	V SLU	1.44	SLU 84	Si
Maschio 15	PF	1.163	SLV 9	Si
Maschio 15	V	0.73	SLV 9	No
Maschio 15	PFFP	290.755	SLV 7	Si
Maschio 15	R	1.273	SLV 9	Si
Maschio 17	PF SLU	10.515	SLU 44	Si
Maschio 17	V SLU	5.977	SLU 84	Si
Maschio 17	PF	2.996	SLV 5	Si
Maschio 17	V	0.842	SLV 7	No
Maschio 17	PFFP	61.763	SLV 1	Si
Maschio 17	R	0.412	SLV 1	No
Maschio 18	PF SLU	0	SLU 84	No
Maschio 18	V SLU	0	SLU 1	No
Maschio 18	PF	0	SLV 16	No
Maschio 18	V	0	SLV 1	No
Maschio 18	PFFP	0	SLV 12	No
Maschio 18	R	0	SLV 16	No
Maschio 20	PF SLU	0	SLU 84	No
Maschio 20	V SLU	0	SLU 1	No
Maschio 20	PF	0	SLV 16	No
Maschio 20	V	0	SLV 1	No
Maschio 20	PFFP	7.097	SLV 11	Si
Maschio 20	R	0	SLV 16	No
Maschio 22	PF SLU	2.947	SLU 41	Si
Maschio 22	V SLU	2.761	SLU 69	Si
Maschio 22	PF	1.97	SLV 11	Si
Maschio 22	V	1.311	SLV 11	Si
Maschio 22	PFFP	10.439	SLV 7	Si
Maschio 22	R	0.761	SLV 9	No
Maschio 24	PF SLU	2.572	SLU 48	Si
Maschio 24	V SLU	3.118	SLU 83	Si
Maschio 24	PF	2.789	SLV 1	Si
Maschio 24	V	3.909	SLV 9	Si

Desc.	Stato limite	Coeff.s.	Comb.	Verifica
Maschio 24	PFFP	6.179	SLV 9	Si
Maschio 24	R	0.039	SLV 13	No
Maschio 25	PF SLU	10.36	SLU 48	Si
Maschio 25	V SLU	7.479	SLU 79	Si
Maschio 25	PF	2.211	SLV 9	Si
Maschio 25	V	0.562	SLV 1	No
Maschio 25	PFFP	12.197	SLV 5	Si
Maschio 25	R	0	SLV 6	No
Maschio 26	PF SLU	9.286	SLU 83	Si
Maschio 26	V SLU	4.612	SLU 77	Si
Maschio 26	PF	3.103	SLV 9	Si
Maschio 26	V	0.622	SLV 1	No
Maschio 26	PFFP	17.655	SLV 9	Si
Maschio 26	R	0	SLV 10	No
Maschio 27	PF SLU	8.36	SLU 84	Si
Maschio 27	V SLU	6.841	SLU 84	Si
Maschio 27	PF	3.094	SLV 13	Si
Maschio 27	V	0.616	SLV 13	No
Maschio 27	PFFP	17.899	SLV 5	Si
Maschio 27	R	0	SLV 10	No
Maschio 28	PF SLU	3.508	SLU 83	Si
Maschio 28	V SLU	3.322	SLU 83	Si
Maschio 28	PF	0	SLV 5	No
Maschio 28	V	0	SLV 5	No
Maschio 28	PFFP	9.851	SLV 5	Si
Maschio 28	R	0	SLV 10	No
Maschio 29	PF SLU	24.359	SLU 64	Si
Maschio 29	V SLU	187.958	SLU 81	Si
Maschio 29	PF	0	SLV 12	No
Maschio 29	V	0	SLV 7	No
Maschio 29	PFFP	2.362	SLV 7	Si
Maschio 29	R	0	SLV 12	No
Maschio 30	PF SLU	4.685	SLU 83	Si
Maschio 30	V SLU	1.744	SLU 83	Si
Maschio 30	PF	1.613	SLV 3	Si
Maschio 30	V	0.679	SLV 3	No
Maschio 30	PFFP	39.725	SLV 15	Si
Maschio 30	R	0.352	SLV 11	No
Maschio 31	PF SLU	4.486	SLU 84	Si
Maschio 31	V SLU	5.446	SLU 84	Si
Maschio 31	PF	1.564	SLV 13	Si
Maschio 31	V	0.742	SLV 1	No
Maschio 31	PFFP	33.887	SLV 5	Si
Maschio 31	R	0.336	SLV 9	No
Maschio 32	PF SLU	0	SLU 81	No
Maschio 32	V SLU	3.504	SLU 83	Si
Maschio 32	PF	0	SLV 1	No
Maschio 32	V	0	SLV 1	No
Maschio 32	PFFP	22.204	SLV 1	Si
Maschio 32	R	0	SLV 5	No
Maschio 33	PF SLU	2.935	SLU 78	Si
Maschio 33	V SLU	9.905	SLU 80	Si
Maschio 33	PF	0	SLV 1	No
Maschio 33	V	0	SLV 1	No
Maschio 33	PFFP	24.02	SLV 5	Si
Maschio 33	R	0.392	SLV 3	No
Maschio 34	PF SLU	5.118	SLU 83	Si
Maschio 34	V SLU	8.058	SLU 81	Si
Maschio 34	PF	1.339	SLV 13	Si
Maschio 34	V	0.65	SLV 13	No
Maschio 34	PFFP	32.258	SLV 9	Si
Maschio 34	R	0.362	SLV 3	No
Maschio 35	PF SLU	0	SLU 35	No
Maschio 35	V SLU	5.64	SLU 84	Si
Maschio 35	PF	0.67	SLV 13	No
Maschio 35	V	0.179	SLV 13	No
Maschio 35	PFFP	46.138	SLV 5	Si
Maschio 35	R	0	SLV 5	No
Maschio 36	PF SLU	13.642	SLU 83	Si
Maschio 36	V SLU	1.298	SLU 83	Si
Maschio 36	PF	2.302	SLV 3	Si
Maschio 36	V	0.651	SLV 15	No
Maschio 36	PFFP	38.464	SLV 3	Si
Maschio 36	R	0.327	SLV 5	No
Maschio 37	PF SLU	6.935	SLU 83	Si
Maschio 37	V SLU	1.388	SLU 84	Si
Maschio 37	PF	2.45	SLV 11	Si
Maschio 37	V	0.658	SLV 5	No
Maschio 37	PFFP	29.851	SLV 11	Si
Maschio 37	R	0.337	SLV 1	No
Maschio 38	PF SLU	4.519	SLU 84	Si
Maschio 38	V SLU	4.209	SLU 84	Si
Maschio 38	PF	2.479	SLV 11	Si
Maschio 38	V	0.738	SLV 11	No
Maschio 38	PFFP	292.512	SLV 11	Si
Maschio 38	R	1.265	SLV 1	Si
Maschio 39	PF SLU	78.864	SLU 83	Si
Maschio 39	V SLU	2.57	SLU 83	Si
Maschio 39	PF	3.729	SLV 9	Si
Maschio 39	V	0.807	SLV 11	No
Maschio 39	PFFP	31.575	SLV 13	Si
Maschio 39	R	0.255	SLV 3	No

Desc.	Stato limite	Coeff.s.	Comb.	Verifica
Maschio 41	PF SLU	4.36	SLU 83	Si
Maschio 41	V SLU	1.047	SLU 83	Si
Maschio 41	PF	1.804	SLV 9	Si
Maschio 41	V	0.674	SLV 11	No
Maschio 41	PFFP	12.395	SLV 13	Si
Maschio 41	R	0.163	SLV 3	No
Maschio 42	PF SLU	39.179	SLU 39	Si
Maschio 42	V SLU	11.707	SLU 82	Si
Maschio 42	PF	0	SLV 3	No
Maschio 42	V	0	SLV 3	No
Maschio 42	PFFP	6.588	SLV 7	Si
Maschio 42	R	0.135	SLV 15	No
Maschio 43	PF SLU	2.659	SLU 44	Si
Maschio 43	V SLU	2.077	SLU 84	Si
Maschio 43	PF	0	SLV 8	No
Maschio 43	V	0	SLV 7	No
Maschio 43	PFFP	3.708	SLV 7	Si
Maschio 43	R	0	SLV 8	No
Maschio 44	PF SLU	0.794	SLU 83	No
Maschio 44	V SLU	0.737	SLU 83	No
Maschio 44	PF	0	SLV 3	No
Maschio 44	V	0	SLV 3	No
Maschio 44	PFFP	42.377	SLV 11	Si
Maschio 44	R	0.319	SLV 5	No
Maschio 45	PF SLU	0.947	SLU 83	No
Maschio 45	V SLU	0.256	SLU 77	No
Maschio 45	PF	0	SLV 10	No
Maschio 45	V	0	SLV 1	No
Maschio 45	PFFP	1.409	SLV 5	Si
Maschio 45	R	0	SLV 10	No
Maschio 46	PF SLU	2.646	SLU 83	Si
Maschio 46	V SLU	4.669	SLU 2	Si
Maschio 46	PF	1.781	SLV 11	Si
Maschio 46	V	0.868	SLV 7	No
Maschio 46	PFFP	26.484	SLV 11	Si
Maschio 46	R	0.202	SLV 1	No
Maschio 47	PF SLU	0.45	SLU 84	No
Maschio 47	V SLU	3.805	SLU 84	Si
Maschio 47	PF	1.411	SLV 3	Si
Maschio 47	V	0.953	SLV 13	No
Maschio 47	PFFP	36.36	SLV 11	Si
Maschio 47	R	0.118	SLV 7	No
Maschio 48	PF SLU	10.742	SLU 76	Si
Maschio 48	V SLU	25.136	SLU 80	Si
Maschio 48	PF	0.856	SLV 7	No
Maschio 48	V	0.086	SLV 7	No
Maschio 48	PFFP	16.247	SLV 15	Si
Maschio 48	R	0.196	SLV 15	No
Maschio 49	PF SLU	5.823	SLU 84	Si
Maschio 49	V SLU	20.824	SLU 84	Si
Maschio 49	PF	0	SLV 9	No
Maschio 49	V	0	SLV 9	No
Maschio 49	PFFP	15.029	SLV 9	Si
Maschio 49	R	0.367	SLV 15	No
Maschio 50	PF SLU	7.962	SLU 83	Si
Maschio 50	V SLU	5.668	SLU 83	Si
Maschio 50	PF	2.4	SLV 3	Si
Maschio 50	V	0.692	SLV 15	No
Maschio 50	PFFP	16.744	SLV 7	Si
Maschio 50	R	0.199	SLV 11	No
Maschio 51	PF SLU	2.566	SLU 83	Si
Maschio 51	V SLU	2.197	SLU 83	Si
Maschio 51	PF	2.308	SLV 3	Si
Maschio 51	V	0.903	SLV 3	No
Maschio 51	PFFP	13.703	SLV 3	Si
Maschio 51	R	0.302	SLV 7	No
Maschio 52	PF SLU	5.522	SLU 83	Si
Maschio 52	V SLU	3.669	SLU 77	Si
Maschio 52	PF	3.443	SLV 13	Si
Maschio 52	V	0.747	SLV 1	No
Maschio 52	PFFP	23.526	SLV 5	Si
Maschio 52	R	0.333	SLV 13	No
Maschio 53	PF SLU	3.83	SLU 82	Si
Maschio 53	V SLU	5.973	SLU 80	Si
Maschio 53	PF	1.012	SLV 5	Si
Maschio 53	V	0.36	SLV 1	No
Maschio 53	PFFP	3.24	SLV 5	Si
Maschio 53	R	0.369	SLV 5	No
Maschio 54	PF SLU	2.08	SLU 77	Si
Maschio 54	V SLU	22.442	SLU 2	Si
Maschio 54	PF	1.564	SLV 7	Si
Maschio 54	V	0.934	SLV 7	No
Maschio 54	PFFP	9.754	SLV 1	Si
Maschio 54	R	0.373	SLV 3	No
Maschio 55	PF SLU	4.368	SLU 83	Si
Maschio 55	V SLU	16.727	SLU 2	Si
Maschio 55	PF	1.825	SLV 9	Si
Maschio 55	V	0.884	SLV 9	No
Maschio 55	PFFP	6.161	SLV 15	Si
Maschio 55	R	0.058	SLV 3	No
Maschio 56	PF SLU	4.51	SLU 84	Si
Maschio 56	V SLU	1.626	SLU 80	Si

Desc.	Stato limite	Coeff.s.	Comb.	Verifica
Maschio 56	PF	0	SLV 10	No
Maschio 56	V	0	SLV 5	No
Maschio 56	PFFP	1.077	SLV 9	Si
Maschio 56	R	0	SLV 10	No
Maschio 57	PF SLU	2.858	SLU 83	Si
Maschio 57	V SLU	5.898	SLU 72	Si
Maschio 57	PF	1.626	SLV 13	Si
Maschio 57	V	0.587	SLV 13	No
Maschio 57	PFFP	6.69	SLV 9	Si
Maschio 57	R	0.054	SLV 15	No
Maschio 58	PF SLU	2.037	SLU 83	Si
Maschio 58	V SLU	0.858	SLU 83	No
Maschio 58	PF	0	SLV 16	No
Maschio 58	V	0	SLV 7	No
Maschio 58	PFFP	0	SLV 11	No
Maschio 58	R	0	SLV 12	No
Maschio 59	PF SLU	2.309	SLU 83	Si
Maschio 59	V SLU	1.459	SLU 81	Si
Maschio 59	PF	0	SLV 7	No
Maschio 59	V	0	SLV 7	No
Maschio 59	PFFP	0	SLV 12	No
Maschio 59	R	0	SLV 12	No
Maschio 60	PF SLU	0	SLU 81	No
Maschio 60	V SLU	1.465	SLU 81	Si
Maschio 60	PF	0	SLV 15	No
Maschio 60	V	0	SLV 15	No
Maschio 60	PFFP	7.625	SLV 11	Si
Maschio 60	R	0	SLV 3	No
Maschio 61	PF SLU	0	SLU 32	No
Maschio 61	V SLU	2.11	SLU 83	Si
Maschio 61	PF	1.533	SLV 11	Si
Maschio 61	V	0.556	SLV 5	No
Maschio 61	PFFP	5.882	SLV 9	Si
Maschio 61	R	0	SLV 5	No
Maschio 62	PF SLU	0	SLU 41	No
Maschio 62	V SLU	0.427	SLU 77	No
Maschio 62	PF	0	SLV 1	No
Maschio 62	V	0	SLV 1	No
Maschio 62	PFFP	0	SLV 5	No
Maschio 62	R	0	SLV 10	No
Maschio 63	PF SLU	2.757	SLU 84	Si
Maschio 63	V SLU	3.118	SLU 84	Si
Maschio 63	PF	0	SLV 9	No
Maschio 63	V	0	SLV 9	No
Maschio 63	PFFP	2.442	SLV 9	Si
Maschio 63	R	0.021	SLV 13	No
Maschio 64	PF SLU	0.867	SLU 83	No
Maschio 64	V SLU	1.358	SLU 83	Si
Maschio 64	PF	0	SLV 12	No
Maschio 64	V	0	SLV 7	No
Maschio 64	PFFP	1.864	SLV 11	Si
Maschio 64	R	0.044	SLV 11	No
Maschio 65	PF SLU	0	SLU 74	No
Maschio 65	V SLU	2.699	SLU 2	Si
Maschio 65	PF	2.379	SLV 9	Si
Maschio 65	V	0.616	SLV 9	No
Maschio 65	PFFP	5.941	SLV 1	Si
Maschio 65	R	0.022	SLV 3	No
Maschio 66	PF SLU	0	SLU 47	No
Maschio 66	V SLU	3.218	SLU 44	Si
Maschio 66	PF	0	SLV 14	No
Maschio 66	V	0	SLV 3	No
Maschio 66	PFFP	0	SLV 12	No
Maschio 66	R	0	SLV 14	No
Maschio 67	PF SLU	0.092	SLU 83	No
Maschio 67	V SLU	1.641	SLU 76	Si
Maschio 67	PF	0	SLV 10	No
Maschio 67	V	0	SLV 5	No
Maschio 67	PFFP	0	SLV 14	No
Maschio 67	R	0.072	SLV 3	No
Maschio 68	PF SLU	1.811	SLU 81	Si
Maschio 68	V SLU	0.74	SLU 82	No
Maschio 68	PF	0	SLV 3	No
Maschio 68	V	0	SLV 3	No
Maschio 68	PFFP	0	SLV 7	No
Maschio 68	R	0.032	SLV 11	No
Maschio 69	PF SLU	5.816	SLU 76	Si
Maschio 69	V SLU	6.969	SLU 76	Si
Maschio 69	PF	0	SLV 5	No
Maschio 69	V	0	SLV 5	No
Maschio 69	PFFP	5.736	SLV 15	Si
Maschio 69	R	0.066	SLV 3	No
Maschio 70	PF SLU	11.112	SLU 76	Si
Maschio 70	V SLU	10.132	SLU 83	Si
Maschio 70	PF	0	SLV 16	No
Maschio 70	V	0	SLV 11	No
Maschio 70	PFFP	4.93	SLV 7	Si
Maschio 70	R	0	SLV 16	No
Maschio 71	PF SLU	0.399	SLU 83	No
Maschio 71	V SLU	5.544	SLU 82	Si
Maschio 71	PF	0	SLV 11	No
Maschio 71	V	0	SLV 11	No

Desc.	Stato limite	Coeff.s.	Comb.	Verifica
Maschio 71	PFFP	1.073	SLV 15	Si
Maschio 71	R	0.021	SLV 1	No
Maschio 72	PF SLU	2.623	SLU 84	Si
Maschio 72	V SLU	3.015	SLU 83	Si
Maschio 72	PF	3.678	SLV 7	Si
Maschio 72	V	0.895	SLV 7	No
Maschio 72	PFFP	22.852	SLV 11	Si
Maschio 72	R	0.271	SLV 1	No
Maschio 73	PF SLU	13.122	SLU 83	Si
Maschio 73	V SLU	3.648	SLU 83	Si
Maschio 73	PF	4.127	SLV 7	Si
Maschio 73	V	1.285	SLV 7	Si
Maschio 73	PFFP	26.045	SLV 11	Si
Maschio 73	R	0.359	SLV 1	No
Maschio 75	PF SLU	7.969	SLU 83	Si
Maschio 75	V SLU	7.974	SLU 82	Si
Maschio 75	PF	3.965	SLV 11	Si
Maschio 75	V	0.968	SLV 7	No
Maschio 75	PFFP	16.488	SLV 3	Si
Maschio 75	R	0.141	SLV 1	No
Maschio 76	PF SLU	11.049	SLU 84	Si
Maschio 76	V SLU	9.714	SLU 57	Si
Maschio 76	PF	3.321	SLV 5	Si
Maschio 76	V	0.775	SLV 9	No
Maschio 76	PFFP	9.686	SLV 5	Si
Maschio 76	R	0.031	SLV 1	No
Maschio 77	PF SLU	3.085	SLU 83	Si
Maschio 77	V SLU	1.701	SLU 83	Si
Maschio 77	PF	3.425	SLV 13	Si
Maschio 77	V	0.763	SLV 3	No
Maschio 77	PFFP	10.01	SLV 13	Si
Maschio 77	R	0.052	SLV 11	No
Maschio 78	PF SLU	4.244	SLU 83	Si
Maschio 78	V SLU	8.657	SLU 73	Si
Maschio 78	PF	3.54	SLV 1	Si
Maschio 78	V	0.827	SLV 3	No
Maschio 78	PFFP	10.349	SLV 5	Si
Maschio 78	R	0.054	SLV 9	No
Maschio 79	PF SLU	0	SLU 20	No
Maschio 79	V SLU	3.805	SLU 83	Si
Maschio 79	PF	0	SLV 1	No
Maschio 79	V	0	SLV 1	No
Maschio 79	PFFP	8.114	SLV 11	Si
Maschio 79	R	0	SLV 3	No
Maschio 80	PF SLU	3.402	SLU 83	Si
Maschio 80	V SLU	4.546	SLU 78	Si
Maschio 80	PF	2.423	SLV 3	Si
Maschio 80	V	0.78	SLV 15	No
Maschio 80	PFFP	9.809	SLV 9	Si
Maschio 80	R	0.053	SLV 9	No
Maschio 81	PF SLU	0	SLU 77	No
Maschio 81	V SLU	1.393	SLU 83	Si
Maschio 81	PF	1.81	SLV 13	Si
Maschio 81	V	0.723	SLV 15	No
Maschio 81	PFFP	9.42	SLV 1	Si
Maschio 81	R	0.05	SLV 3	No
Maschio 82	PF SLU	2.938	SLU 81	Si
Maschio 82	V SLU	1.87	SLU 81	Si
Maschio 82	PF	0	SLV 12	No
Maschio 82	V	0	SLV 3	No
Maschio 82	PFFP	0	SLV 12	No
Maschio 82	R	0	SLV 12	No
Maschio 83	PF SLU	1.452	SLU 83	Si
Maschio 83	V SLU	0.801	SLU 81	No
Maschio 83	PF	0	SLV 12	No
Maschio 83	V	0	SLV 1	No
Maschio 83	PFFP	0	SLV 8	No
Maschio 83	R	0	SLV 12	No
Maschio 84	PF SLU	4.424	SLU 83	Si
Maschio 84	V SLU	1.237	SLU 83	Si
Maschio 84	PF	0	SLV 5	No
Maschio 84	V	0	SLV 5	No
Maschio 84	PFFP	3.851	SLV 9	Si
Maschio 84	R	0.054	SLV 5	No
Maschio 85	PF SLU	8.208	SLU 83	Si
Maschio 85	V SLU	6.657	SLU 77	Si
Maschio 85	PF	1.808	SLV 5	Si
Maschio 85	V	0.608	SLV 1	No
Maschio 85	PFFP	4.806	SLV 9	Si
Maschio 85	R	0.058	SLV 3	No
Maschio 86	PF SLU	8.909	SLU 84	Si
Maschio 86	V SLU	8.219	SLU 78	Si
Maschio 86	PF	1.697	SLV 9	Si
Maschio 86	V	0.621	SLV 13	No
Maschio 86	PFFP	4.235	SLV 5	Si
Maschio 86	R	0.057	SLV 15	No
Maschio 87	PF SLU	7.096	SLU 84	Si
Maschio 87	V SLU	1.192	SLU 83	Si
Maschio 87	PF	0	SLV 10	No
Maschio 87	V	0	SLV 9	No
Maschio 87	PFFP	2.269	SLV 5	Si
Maschio 87	R	0	SLV 10	No

Desc.	Stato limite	Coeff.s.	Comb.	Verifica
Maschio 88	PF SLU	1.285	SLU 84	Si
Maschio 88	V SLU	3.305	SLU 83	Si
Maschio 88	PF	2.09	SLV 9	Si
Maschio 88	V	0.87	SLV 11	No
Maschio 88	PFFP	19.085	SLV 7	Si
Maschio 88	R	0.268	SLV 13	No
Maschio 89	PF SLU	23.345	SLU 42	Si
Maschio 89	V SLU	14.739	SLU 42	Si
Maschio 89	PF	3.735	SLV 11	Si
Maschio 89	V	1.064	SLV 11	Si
Maschio 89	PFFP	21.097	SLV 7	Si
Maschio 89	R	0.355	SLV 13	No
Maschio 90	PF SLU	0	SLU 1	No
Maschio 90	V SLU	0	SLU 1	No
Maschio 90	PF	0	SLV 1	No
Maschio 90	V	0	SLV 1	No
Maschio 90	PFFP	9.659	SLV 7	Si
Maschio 90	R	0.01	SLV 11	No
Maschio 91	PF SLU	5.563	SLU 84	Si
Maschio 91	V SLU	10.833	SLU 82	Si
Maschio 91	PF	4.174	SLV 9	Si
Maschio 91	V	0.865	SLV 11	No
Maschio 91	PFFP	17.468	SLV 15	Si
Maschio 91	R	0.119	SLV 1	No
Maschio 93	PF SLU	2.4	SLU 83	Si
Maschio 93	V SLU	3.881	SLU 77	Si
Maschio 93	PF	2.255	SLV 11	Si
Maschio 93	V	0.883	SLV 11	No
Maschio 93	PFFP	7.661	SLV 13	Si
Maschio 93	R	0.048	SLV 15	No
Maschio 94	PF SLU	1.757	SLU 84	Si
Maschio 94	V SLU	6.138	SLU 82	Si
Maschio 94	PF	0	SLV 3	No
Maschio 94	V	0	SLV 3	No
Maschio 94	PFFP	1.82	SLV 7	Si
Maschio 94	R	0.021	SLV 9	No
Maschio 95	PF SLU	9.029	SLU 76	Si
Maschio 95	V SLU	14.709	SLU 81	Si
Maschio 95	PF	0	SLV 4	No
Maschio 95	V	0	SLV 1	No
Maschio 95	PFFP	5.271	SLV 11	Si
Maschio 95	R	0	SLV 4	No
Maschio 96	PF SLU	0.784	SLU 83	No
Maschio 96	V SLU	8.033	SLU 2	Si
Maschio 96	PF	0	SLV 16	No
Maschio 96	V	0	SLV 1	No
Maschio 96	PFFP	3.131	SLV 1	Si
Maschio 96	R	0	SLV 16	No
Maschio 97	PF SLU	1.503	SLU 83	Si
Maschio 97	V SLU	1.364	SLU 83	Si
Maschio 97	PF	0	SLV 3	No
Maschio 97	V	0	SLV 3	No
Maschio 97	PFFP	2.988	SLV 11	Si
Maschio 97	R	0.047	SLV 7	No
Maschio 98	PF SLU	0	SLU 1	No
Maschio 98	V SLU	0	SLU 1	No
Maschio 98	PF	0	SLV 10	No
Maschio 98	V	0	SLV 1	No
Maschio 98	PFFP	0	SLV 16	No
Maschio 98	R	0	SLV 10	No
Maschio 99	PF SLU	0	SLU 1	No
Maschio 99	V SLU	0	SLU 1	No
Maschio 99	PF	0	SLV 1	No
Maschio 99	V	0	SLV 1	No
Maschio 99	PFFP	0	SLV 10	No
Maschio 99	R	0	SLV 5	No
Maschio 100	PF SLU	0	SLU 73	No
Maschio 100	V SLU	2.676	SLU 2	Si
Maschio 100	PF	2.347	SLV 5	Si
Maschio 100	V	0.58	SLV 11	No
Maschio 100	PFFP	5.746	SLV 7	Si
Maschio 100	R	0.022	SLV 13	No
Maschio 101	PF SLU	0.655	SLU 83	No
Maschio 101	V SLU	0.806	SLU 83	No
Maschio 101	PF	0	SLV 12	No
Maschio 101	V	0	SLV 7	No
Maschio 101	PFFP	1.676	SLV 7	Si
Maschio 101	R	0.056	SLV 3	No
Maschio 102	PF SLU	0	SLU 73	No
Maschio 102	V SLU	3.527	SLU 83	Si
Maschio 102	PF	0	SLV 16	No
Maschio 102	V	0	SLV 1	No
Maschio 102	PFFP	0	SLV 16	No
Maschio 102	R	0	SLV 10	No
Maschio 103	PF SLU	2.935	SLU 84	Si
Maschio 103	V SLU	2.464	SLU 78	Si
Maschio 103	PF	1.664	SLV 11	Si
Maschio 103	V	0.394	SLV 11	No
Maschio 103	PFFP	4.004	SLV 9	Si
Maschio 103	R	0.021	SLV 1	No
Maschio 104	PF SLU	0	SLU 62	No
Maschio 104	V SLU	1.523	SLU 83	Si

Desc.	Stato limite	Coeff.s.	Comb.	Verifica
Maschio 104	PF	0.952	SLV 11	No
Maschio 104	V	0.522	SLV 7	No
Maschio 104	PFFP	4.822	SLV 5	Si
Maschio 104	R	0.059	SLV 15	No
Maschio 105	PF SLU	0	SLU 20	No
Maschio 105	V SLU	1.905	SLU 76	Si
Maschio 105	PF	0.58	SLV 13	No
Maschio 105	V	0.49	SLV 3	No
Maschio 105	PFFP	8.715	SLV 7	Si
Maschio 105	R	0.058	SLV 15	No
Maschio 106	PF SLU	2.687	SLU 83	Si
Maschio 106	V SLU	2.561	SLU 83	Si
Maschio 106	PF	1.838	SLV 7	Si
Maschio 106	V	0.544	SLV 7	No
Maschio 106	PFFP	3.649	SLV 7	Si
Maschio 106	R	0.055	SLV 13	No
Maschio 107	PF SLU	1.381	SLU 83	Si
Maschio 107	V SLU	3.567	SLU 47	Si
Maschio 107	PF	0	SLV 3	No
Maschio 107	V	0	SLV 3	No
Maschio 107	PFFP	3.253	SLV 7	Si
Maschio 107	R	0.056	SLV 15	No
Maschio 108	PF SLU	6.772	SLU 83	Si
Maschio 108	V SLU	3.705	SLU 77	Si
Maschio 108	PF	2.141	SLV 1	Si
Maschio 108	V	0.684	SLV 1	No
Maschio 108	PFFP	7.142	SLV 5	Si
Maschio 108	R	0.054	SLV 13	No
Maschio 109	PF SLU	3.609	SLU 83	Si
Maschio 109	V SLU	2.206	SLU 84	Si
Maschio 109	PF	1.304	SLV 1	Si
Maschio 109	V	0.602	SLV 1	No
Maschio 109	PFFP	2.211	SLV 5	Si
Maschio 109	R	0.058	SLV 13	No
Maschio 110	PF SLU	1.867	SLU 83	Si
Maschio 110	V SLU	12.277	SLU 83	Si
Maschio 110	PF	1.705	SLV 7	Si
Maschio 110	V	0.805	SLV 7	No
Maschio 110	PFFP	4.545	SLV 1	Si
Maschio 110	R	0.058	SLV 13	No
Maschio 111	PF SLU	8.089	SLU 83	Si
Maschio 111	V SLU	4.132	SLU 79	Si
Maschio 111	PF	2.391	SLV 11	Si
Maschio 111	V	1.014	SLV 11	Si
Maschio 111	PFFP	3.794	SLV 15	Si
Maschio 111	R	0.058	SLV 1	No
Maschio 112	PF SLU	6.654	SLU 84	Si
Maschio 112	V SLU	3.141	SLU 76	Si
Maschio 112	PF	1.87	SLV 9	Si
Maschio 112	V	0.854	SLV 9	No
Maschio 112	PFFP	4.011	SLV 9	Si
Maschio 112	R	0.058	SLV 3	No
Maschio 113	PF SLU	4.218	SLU 78	Si
Maschio 113	V SLU	1.881	SLU 80	Si
Maschio 113	PF	2.398	SLV 13	Si
Maschio 113	V	1.057	SLV 1	Si
Maschio 113	PFFP	2.744	SLV 9	Si
Maschio 113	R	0.057	SLV 3	No
Maschio 114	PF SLU	7.965	SLU 79	Si
Maschio 114	V SLU	3.613	SLU 72	Si
Maschio 114	PF	2.951	SLV 13	Si
Maschio 114	V	1.039	SLV 13	Si
Maschio 114	PFFP	4.016	SLV 9	Si
Maschio 114	R	0.047	SLV 5	No
Maschio 115	PF SLU	4.772	SLU 84	Si
Maschio 115	V SLU	1.377	SLU 83	Si
Maschio 115	PF	0	SLV 15	No
Maschio 115	V	0	SLV 15	No
Maschio 115	PFFP	2.704	SLV 15	Si
Maschio 115	R	0.039	SLV 15	No
Maschio 116	PF SLU	7.293	SLU 81	Si
Maschio 116	V SLU	4.863	SLU 81	Si
Maschio 116	PF	1.67	SLV 3	Si
Maschio 116	V	0.564	SLV 15	No
Maschio 116	PFFP	2.843	SLV 11	Si
Maschio 116	R	0.037	SLV 11	No
Maschio 117	PF SLU	4.521	SLU 81	Si
Maschio 117	V SLU	6.722	SLU 81	Si
Maschio 117	PF	0	SLV 11	No
Maschio 117	V	0	SLV 11	No
Maschio 117	PFFP	3.849	SLV 11	Si
Maschio 117	R	0	SLV 3	No
Maschio 118	PF SLU	8.506	SLU 83	Si
Maschio 118	V SLU	2.324	SLU 83	Si
Maschio 118	PF	1.348	SLV 5	Si
Maschio 118	V	0.669	SLV 5	No
Maschio 118	PFFP	4.192	SLV 9	Si
Maschio 118	R	0	SLV 5	No
Maschio 119	PF SLU	2.788	SLU 69	Si
Maschio 119	V SLU	7.014	SLU 48	Si
Maschio 119	PF	0	SLV 16	No
Maschio 119	V	0	SLV 1	No

Desc.	Stato limite	Coeff.s.	Comb.	Verifica
Maschio 119	PFFP	0	SLV 12	No
Maschio 119	R	0	SLV 10	No
Maschio 120	PF SLU	20.892	SLU 82	Si
Maschio 120	V SLU	5.332	SLU 84	Si
Maschio 120	PF	0	SLV 9	No
Maschio 120	V	0	SLV 9	No
Maschio 120	PFFP	1.337	SLV 9	Si
Maschio 120	R	0.019	SLV 7	No
Maschio 121	PF SLU	3.432	SLU 77	Si
Maschio 121	V SLU	5.076	SLU 81	Si
Maschio 121	PF	0	SLV 3	No
Maschio 121	V	0	SLV 3	No
Maschio 121	PFFP	1.908	SLV 11	Si
Maschio 121	R	0	SLV 8	No
Maschio 122	PF SLU	2.69	SLU 84	Si
Maschio 122	V SLU	2.379	SLU 2	Si
Maschio 122	PF	1.861	SLV 7	Si
Maschio 122	V	0.471	SLV 7	No
Maschio 122	PFFP	3.508	SLV 11	Si
Maschio 122	R	0.019	SLV 1	No
Maschio 123	PF SLU	0	SLU 57	No
Maschio 123	V SLU	3.417	SLU 76	Si
Maschio 123	PF	0	SLV 6	No
Maschio 123	V	0	SLV 1	No
Maschio 123	PFFP	0	SLV 6	No
Maschio 123	R	0.02	SLV 3	No
Maschio 124	PF SLU	5.809	SLU 2	Si
Maschio 124	V SLU	17.686	SLU 43	Si
Maschio 124	PF	0	SLV 14	No
Maschio 124	V	0	SLV 1	No
Maschio 124	PFFP	2.097	SLV 11	Si
Maschio 124	R	0	SLV 14	No
Maschio 125	PF SLU	2.655	SLU 83	Si
Maschio 125	V SLU	10.394	SLU 36	Si
Maschio 125	PF	0	SLV 12	No
Maschio 125	V	0	SLV 1	No
Maschio 125	PFFP	3.086	SLV 9	Si
Maschio 125	R	0	SLV 12	No
Maschio 126	PF SLU	4.11	SLU 82	Si
Maschio 126	V SLU	1.816	SLU 82	Si
Maschio 126	PF	0	SLV 11	No
Maschio 126	V	0	SLV 11	No
Maschio 126	PFFP	4.288	SLV 7	Si
Maschio 126	R	0.018	SLV 11	No
Maschio 127	PF SLU	1.903	SLU 76	Si
Maschio 127	V SLU	10.841	SLU 81	Si
Maschio 127	PF	0	SLV 10	No
Maschio 127	V	0	SLV 5	No
Maschio 127	PFFP	6.755	SLV 15	Si
Maschio 127	R	0	SLV 10	No
Maschio 128	PF SLU	7.336	SLU 77	Si
Maschio 128	V SLU	4.574	SLU 84	Si
Maschio 128	PF	0	SLV 15	No
Maschio 128	V	0	SLV 15	No
Maschio 128	PFFP	3.118	SLV 7	Si
Maschio 128	R	0.057	SLV 3	No
Maschio 129	PF SLU	21.709	SLU 81	Si
Maschio 129	V SLU	197.427	SLU 40	Si
Maschio 129	PF	0	SLV 11	No
Maschio 129	V	0	SLV 11	No
Maschio 129	PFFP	1.219	SLV 15	Si
Maschio 129	R	0.02	SLV 1	No
Maschio 130	PF SLU	2.324	SLU 83	Si
Maschio 130	V SLU	3.812	SLU 82	Si
Maschio 130	PF	3.181	SLV 7	Si
Maschio 130	V	1.201	SLV 7	Si
Maschio 130	PFFP	18.615	SLV 7	Si
Maschio 130	R	0.286	SLV 13	No
Maschio 131	PF SLU	12.506	SLU 40	Si
Maschio 131	V SLU	4.066	SLU 82	Si
Maschio 131	PF	3.835	SLV 7	Si
Maschio 131	V	1.392	SLV 7	Si
Maschio 131	PFFP	14.86	SLV 7	Si
Maschio 131	R	0.273	SLV 13	No
Maschio 133	PF SLU	4.891	SLU 83	Si
Maschio 133	V SLU	5.746	SLU 40	Si
Maschio 133	PF	3.874	SLV 11	Si
Maschio 133	V	0.885	SLV 11	No
Maschio 133	PFFP	10.757	SLV 3	Si
Maschio 133	R	0.118	SLV 13	No
Maschio 134	PF SLU	2.599	SLU 83	Si
Maschio 134	V SLU	4.286	SLU 83	Si
Maschio 134	PF	2.674	SLV 11	Si
Maschio 134	V	1.24	SLV 9	Si
Maschio 134	PFFP	7.389	SLV 1	Si
Maschio 134	R	0.034	SLV 11	No
Maschio 135	PF SLU	7.58	SLU 83	Si
Maschio 135	V SLU	2.782	SLU 83	Si
Maschio 135	PF	2.787	SLV 13	Si
Maschio 135	V	0.987	SLV 3	No
Maschio 135	PFFP	6.693	SLV 13	Si
Maschio 135	R	0.05	SLV 9	No

Desc.	Stato limite	Coeff.s.	Comb.	Verifica
Maschio 136	PF SLU	14.404	SLU 83	Si
Maschio 136	V SLU	13.802	SLU 44	Si
Maschio 136	PF	2.456	SLV 13	Si
Maschio 136	V	0.889	SLV 3	No
Maschio 136	PFFP	8.26	SLV 5	Si
Maschio 136	R	0.051	SLV 9	No
Maschio 137	PF SLU	1.115	SLU 77	Si
Maschio 137	V SLU	10.464	SLU 83	Si
Maschio 137	PF	0.816	SLV 13	No
Maschio 137	V	0.917	SLV 13	No
Maschio 137	PFFP	10.275	SLV 3	Si
Maschio 137	R	0.055	SLV 13	No
Maschio 138	PF SLU	0.6	SLU 83	No
Maschio 138	V SLU	2.27	SLU 83	Si
Maschio 138	PF	0.851	SLV 13	No
Maschio 138	V	0.646	SLV 1	No
Maschio 138	PFFP	8.963	SLV 5	Si
Maschio 138	R	0.023	SLV 9	No
Maschio 139	PF SLU	7.557	SLU 78	Si
Maschio 139	V SLU	4.591	SLU 78	Si
Maschio 139	PF	3.459	SLV 3	Si
Maschio 139	V	0.97	SLV 15	No
Maschio 139	PFFP	7.288	SLV 5	Si
Maschio 139	R	0.048	SLV 9	No
Maschio 140	PF SLU	6.972	SLU 81	Si
Maschio 140	V SLU	13.486	SLU 82	Si
Maschio 140	PF	0	SLV 12	No
Maschio 140	V	0	SLV 7	No
Maschio 140	PFFP	0	SLV 12	No
Maschio 140	R	0	SLV 12	No
Maschio 141	PF SLU	0.752	SLU 81	No
Maschio 141	V SLU	3.6	SLU 82	Si
Maschio 141	PF	0	SLV 12	No
Maschio 141	V	0	SLV 3	No
Maschio 141	PFFP	0	SLV 12	No
Maschio 141	R	0	SLV 16	No
Maschio 142	PF SLU	0	SLU 74	No
Maschio 142	V SLU	0.875	SLU 40	No
Maschio 142	PF	0	SLV 16	No
Maschio 142	V	0	SLV 1	No
Maschio 142	PFFP	0	SLV 4	No
Maschio 142	R	0	SLV 16	No
Maschio 143	PF SLU	5.004	SLU 83	Si
Maschio 143	V SLU	2.401	SLU 83	Si
Maschio 143	PF	2.317	SLV 13	Si
Maschio 143	V	0.693	SLV 1	No
Maschio 143	PFFP	4.618	SLV 9	Si
Maschio 143	R	0.043	SLV 9	No
Maschio 144	PF SLU	37.048	SLU 48	Si
Maschio 144	V SLU	9.905	SLU 48	Si
Maschio 144	PF	2.831	SLV 13	Si
Maschio 144	V	1.062	SLV 1	Si
Maschio 144	PFFP	4.511	SLV 9	Si
Maschio 144	R	0.056	SLV 3	No
Maschio 145	PF SLU	48.005	SLU 49	Si
Maschio 145	V SLU	11.89	SLU 49	Si
Maschio 145	PF	2.798	SLV 13	Si
Maschio 145	V	1.077	SLV 13	Si
Maschio 145	PFFP	4.135	SLV 5	Si
Maschio 145	R	0.058	SLV 15	No
Maschio 146	PF SLU	5.305	SLU 83	Si
Maschio 146	V SLU	2.365	SLU 83	Si
Maschio 146	PF	2.209	SLV 13	Si
Maschio 146	V	0.672	SLV 13	No
Maschio 146	PFFP	4.085	SLV 5	Si
Maschio 146	R	0.035	SLV 5	No
Maschio 147	PF SLU	23.698	SLU 41	Si
Maschio 147	V SLU	15.207	SLU 42	Si
Maschio 147	PF	4.059	SLV 11	Si
Maschio 147	V	1.139	SLV 11	Si
Maschio 147	PFFP	17.091	SLV 11	Si
Maschio 147	R	0.222	SLV 11	No
Maschio 148	PF SLU	24.236	SLU 41	Si
Maschio 148	V SLU	14.987	SLU 43	Si
Maschio 148	PF	3.438	SLV 11	Si
Maschio 148	V	1.182	SLV 11	Si
Maschio 148	PFFP	14.175	SLV 7	Si
Maschio 148	R	0.279	SLV 1	No
Maschio 149	PF SLU	0	SLU 1	No
Maschio 149	V SLU	0	SLU 1	No
Maschio 149	PF	0	SLV 1	No
Maschio 149	V	0	SLV 1	No
Maschio 149	PFFP	3.167	SLV 7	Si
Maschio 149	R	0	SLV 11	No
Maschio 150	PF SLU	8.675	SLU 77	Si
Maschio 150	V SLU	10.599	SLU 40	Si
Maschio 150	PF	3.573	SLV 7	Si
Maschio 150	V	0.961	SLV 7	No
Maschio 150	PFFP	13.158	SLV 15	Si
Maschio 150	R	0.133	SLV 1	No
Maschio 152	PF SLU	3.233	SLU 83	Si
Maschio 152	V SLU	6.928	SLU 39	Si

Desc.	Stato limite	Coeff.s.	Comb.	Verifica
Maschio 152	PF	2.681	SLV 7	Si
Maschio 152	V	1.134	SLV 5	Si
Maschio 152	PFFP	7.514	SLV 13	Si
Maschio 152	R	0.032	SLV 13	No
Maschio 153	PF SLU	6.574	SLU 81	Si
Maschio 153	V SLU	89.005	SLU 50	Si
Maschio 153	PF	0	SLV 3	No
Maschio 153	V	0	SLV 3	No
Maschio 153	PFFP	1.184	SLV 3	Si
Maschio 153	R	0.019	SLV 13	No
Maschio 154	PF SLU	11.661	SLU 83	Si
Maschio 154	V SLU	9.981	SLU 41	Si
Maschio 154	PF	1.593	SLV 7	Si
Maschio 154	V	0.742	SLV 3	No
Maschio 154	PFFP	2.847	SLV 11	Si
Maschio 154	R	0.062	SLV 1	No
Maschio 155	PF SLU	3.238	SLU 47	Si
Maschio 155	V SLU	14.902	SLU 71	Si
Maschio 155	PF	0	SLV 5	No
Maschio 155	V	0	SLV 5	No
Maschio 155	PFFP	1.373	SLV 7	Si
Maschio 155	R	0	SLV 12	No
Maschio 156	PF SLU	7.042	SLU 84	Si
Maschio 156	V SLU	3.482	SLU 40	Si
Maschio 156	PF	1.023	SLV 3	Si
Maschio 156	V	0.209	SLV 3	No
Maschio 156	PFFP	4.326	SLV 11	Si
Maschio 156	R	0.035	SLV 7	No
Maschio 157	PF SLU	6.188	SLU 2	Si
Maschio 157	V SLU	7.597	SLU 44	Si
Maschio 157	PF	0	SLV 6	No
Maschio 157	V	0	SLV 1	No
Maschio 157	PFFP	3.164	SLV 11	Si
Maschio 157	R	0	SLV 6	No
Maschio 158	PF SLU	3.49	SLU 2	Si
Maschio 158	V SLU	6.442	SLU 2	Si
Maschio 158	PF	0	SLV 12	No
Maschio 158	V	0	SLV 7	No
Maschio 158	PFFP	6.166	SLV 5	Si
Maschio 158	R	0	SLV 12	No
Maschio 159	PF SLU	12.61	SLU 78	Si
Maschio 159	V SLU	2.75	SLU 2	Si
Maschio 159	PF	6.279	SLV 5	Si
Maschio 159	V	0.687	SLV 7	No
Maschio 159	PFFP	3.333	SLV 3	Si
Maschio 159	R	0.02	SLV 9	No
Maschio 160	PF SLU	3.816	SLU 84	Si
Maschio 160	V SLU	3.562	SLU 84	Si
Maschio 160	PF	0	SLV 12	No
Maschio 160	V	0	SLV 3	No
Maschio 160	PFFP	2.085	SLV 7	Si
Maschio 160	R	0.008	SLV 11	No
Maschio 161	PF SLU	1.73	SLU 84	Si
Maschio 161	V SLU	4.411	SLU 42	Si
Maschio 161	PF	0	SLV 12	No
Maschio 161	V	0	SLV 1	No
Maschio 161	PFFP	0	SLV 12	No
Maschio 161	R	0	SLV 10	No
Maschio 162	PF SLU	8.331	SLU 83	Si
Maschio 162	V SLU	3.76	SLU 78	Si
Maschio 162	PF	1.456	SLV 5	Si
Maschio 162	V	0.278	SLV 5	No
Maschio 162	PFFP	2.111	SLV 5	Si
Maschio 162	R	0.02	SLV 15	No
Maschio 163	PF SLU	5.996	SLU 83	Si
Maschio 163	V SLU	1.7	SLU 83	Si
Maschio 163	PF	1.42	SLV 9	Si
Maschio 163	V	0.658	SLV 9	No
Maschio 163	PFFP	3.981	SLV 5	Si
Maschio 163	R	0.06	SLV 15	No
Maschio 164	PF SLU	2.266	SLU 76	Si
Maschio 164	V SLU	3.628	SLU 76	Si
Maschio 164	PF	0	SLV 1	No
Maschio 164	V	0	SLV 1	No
Maschio 164	PFFP	4.822	SLV 7	Si
Maschio 164	R	0.002	SLV 3	No
Maschio 165	PF SLU	7.821	SLU 83	Si
Maschio 165	V SLU	3.517	SLU 83	Si
Maschio 165	PF	2.613	SLV 3	Si
Maschio 165	V	0.745	SLV 3	No
Maschio 165	PFFP	4.569	SLV 7	Si
Maschio 165	R	0.052	SLV 7	No
Maschio 166	PF SLU	5.324	SLU 76	Si
Maschio 166	V SLU	4.168	SLU 44	Si
Maschio 166	PF	1.254	SLV 3	Si
Maschio 166	V	0.712	SLV 3	No
Maschio 166	PFFP	2.653	SLV 7	Si
Maschio 166	R	0.058	SLV 13	No
Maschio 167	PF SLU	7.463	SLU 78	Si
Maschio 167	V SLU	3.848	SLU 72	Si
Maschio 167	PF	3.038	SLV 1	Si
Maschio 167	V	0.998	SLV 1	No

Desc.	Stato limite	Coeff.s.	Comb.	Verifica
Maschio 167	PFFP	4.452	SLV 5	Si
Maschio 167	R	0.041	SLV 9	No
Maschio 168	PF SLU	4.272	SLU 83	Si
Maschio 168	V SLU	2.2	SLU 84	Si
Maschio 168	PF	2.282	SLV 1	Si
Maschio 168	V	1.11	SLV 13	Si
Maschio 168	PFFP	3.454	SLV 5	Si
Maschio 168	R	0.049	SLV 1	No
Maschio 169	PF SLU	5.144	SLU 83	Si
Maschio 169	V SLU	6.041	SLU 79	Si
Maschio 169	PF	2.13	SLV 7	Si
Maschio 169	V	1.052	SLV 7	Si
Maschio 169	PFFP	3.321	SLV 3	Si
Maschio 169	R	0.059	SLV 15	No
Maschio 170	PF SLU	7.459	SLU 83	Si
Maschio 170	V SLU	5.177	SLU 76	Si
Maschio 170	PF	2.275	SLV 5	Si
Maschio 170	V	1.096	SLV 5	Si
Maschio 170	PFFP	4.418	SLV 1	Si
Maschio 170	R	0.058	SLV 13	No
Maschio 171	PF SLU	40.468	SLU 2	Si
Maschio 171	V SLU	22.951	SLU 2	Si
Maschio 171	PF	4.172	SLV 11	Si
Maschio 171	V	1.818	SLV 9	Si
Maschio 171	PFFP	2.865	SLV 13	Si
Maschio 171	R	0.051	SLV 1	No
Maschio 172	PF SLU	4.32	SLU 80	Si
Maschio 172	V SLU	1.553	SLU 80	Si
Maschio 172	PF	2.02	SLV 9	Si
Maschio 172	V	1.236	SLV 3	Si
Maschio 172	PFFP	1.801	SLV 9	Si
Maschio 172	R	0.018	SLV 9	No
Maschio 173	PF SLU	7.053	SLU 80	Si
Maschio 173	V SLU	3.109	SLU 72	Si
Maschio 173	PF	2.452	SLV 1	Si
Maschio 173	V	1.367	SLV 3	Si
Maschio 173	PFFP	1.436	SLV 9	Si
Maschio 173	R	0	SLV 5	No
Maschio 174	PF SLU	4.688	SLU 31	Si
Maschio 174	V SLU	1.778	SLU 84	Si
Maschio 174	PF	1.126	SLV 15	Si
Maschio 174	V	0.817	SLV 15	No
Maschio 174	PFFP	2.079	SLV 11	Si
Maschio 174	R	0.048	SLV 1	No
Maschio 175	PF SLU	16.26	SLU 81	Si
Maschio 175	V SLU	26.757	SLU 9	Si
Maschio 175	PF	1.326	SLV 3	Si
Maschio 175	V	0.515	SLV 3	No
Maschio 175	PFFP	1.948	SLV 11	Si
Maschio 175	R	0	SLV 7	No
Maschio 176	PF SLU	7.32	SLU 47	Si
Maschio 176	V SLU	16.201	SLU 39	Si
Maschio 176	PF	0	SLV 16	No
Maschio 176	V	0	SLV 1	No
Maschio 176	PFFP	1.257	SLV 11	Si
Maschio 176	R	0	SLV 7	No
Maschio 177	PF SLU	8.871	SLU 35	Si
Maschio 177	V SLU	2.815	SLU 77	Si
Maschio 177	PF	1.806	SLV 9	Si
Maschio 177	V	1.174	SLV 5	Si
Maschio 177	PFFP	2.472	SLV 9	Si
Maschio 177	R	0.057	SLV 1	No
Maschio 178	PF SLU	2.365	SLU 83	Si
Maschio 178	V SLU	5.251	SLU 40	Si
Maschio 178	PF	0	SLV 16	No
Maschio 178	V	0	SLV 1	No
Maschio 178	PFFP	0	SLV 16	No
Maschio 178	R	0	SLV 10	No
Maschio 179	PF SLU	7.16	SLU 42	Si
Maschio 179	V SLU	7.361	SLU 78	Si
Maschio 179	PF	0	SLV 9	No
Maschio 179	V	0	SLV 9	No
Maschio 179	PFFP	0	SLV 9	No
Maschio 179	R	0.018	SLV 3	No
Maschio 180	PF SLU	4.061	SLU 44	Si
Maschio 180	V SLU	3.405	SLU 81	Si
Maschio 180	PF	0	SLV 8	No
Maschio 180	V	0	SLV 3	No
Maschio 180	PFFP	0	SLV 16	No
Maschio 180	R	0	SLV 12	No
Maschio 181	PF SLU	9.248	SLU 78	Si
Maschio 181	V SLU	4.361	SLU 5	Si
Maschio 181	PF	4.795	SLV 7	Si
Maschio 181	V	0.606	SLV 5	No
Maschio 181	PFFP	1.807	SLV 1	Si
Maschio 181	R	0.001	SLV 5	No
Maschio 182	PF SLU	1.394	SLU 2	Si
Maschio 182	V SLU	3.858	SLU 2	Si
Maschio 182	PF	0	SLV 14	No
Maschio 182	V	0	SLV 1	No
Maschio 182	PFFP	0	SLV 12	No
Maschio 182	R	0	SLV 14	No

Desc.	Stato limite	Coeff.s.	Comb.	Verifica
Maschio 183	PF SLU	2.281	SLU 31	Si
Maschio 183	V SLU	2.45	SLU 31	Si
Maschio 183	PF	0	SLV 12	No
Maschio 183	V	0	SLV 1	No
Maschio 183	PFFP	0	SLV 10	No
Maschio 183	R	0	SLV 12	No
Maschio 184	PF SLU	3.563	SLU 81	Si
Maschio 184	V SLU	1.622	SLU 81	Si
Maschio 184	PF	0	SLV 3	No
Maschio 184	V	0	SLV 3	No
Maschio 184	PFFP	1.356	SLV 3	Si
Maschio 184	R	0.016	SLV 11	No
Maschio 185	PF SLU	6.216	SLU 40	Si
Maschio 185	V SLU	6.859	SLU 47	Si
Maschio 185	PF	0	SLV 1	No
Maschio 185	V	0	SLV 1	No
Maschio 185	PFFP	0	SLV 10	No
Maschio 185	R	0	SLV 14	No
Maschio 186	PF SLU	6.021	SLU 40	Si
Maschio 186	V SLU	4.148	SLU 82	Si
Maschio 186	PF	0	SLV 4	No
Maschio 186	V	0	SLV 1	No
Maschio 186	PFFP	0	SLV 4	No
Maschio 186	R	0	SLV 4	No
Maschio 187	PF SLU	7.655	SLU 9	Si
Maschio 187	V SLU	149.908	SLU 40	Si
Maschio 187	PF	1.156	SLV 11	Si
Maschio 187	V	0.342	SLV 11	No
Maschio 187	PFFP	0	SLV 11	No
Maschio 187	R	0.019	SLV 5	No
Maschio 188	PF SLU	7.732	SLU 39	Si
Maschio 188	V SLU	5.384	SLU 81	Si
Maschio 188	PF	4.999	SLV 7	Si
Maschio 188	V	1.379	SLV 9	Si
Maschio 188	PFFP	14.838	SLV 7	Si
Maschio 188	R	0.202	SLV 1	No
Maschio 189	PF SLU	8.34	SLU 40	Si
Maschio 189	V SLU	5.538	SLU 39	Si
Maschio 189	PF	3.804	SLV 13	Si
Maschio 189	V	1.41	SLV 9	Si
Maschio 189	PFFP	8.083	SLV 3	Si
Maschio 189	R	0.245	SLV 13	No
Maschio 191	PF SLU	7.548	SLU 41	Si
Maschio 191	V SLU	5.047	SLU 39	Si
Maschio 191	PF	5.09	SLV 1	Si
Maschio 191	V	1.052	SLV 11	Si
Maschio 191	PFFP	5.049	SLV 15	Si
Maschio 191	R	0.091	SLV 9	No
Maschio 192	PF SLU	16.851	SLU 69	Si
Maschio 192	V SLU	2.991	SLU 77	Si
Maschio 192	PF	2.205	SLV 15	Si
Maschio 192	V	1.178	SLV 9	Si
Maschio 192	PFFP	2.983	SLV 13	Si
Maschio 192	R	0.002	SLV 15	No
Maschio 193	PF SLU	5.263	SLU 77	Si
Maschio 193	V SLU	2.524	SLU 41	Si
Maschio 193	PF	3.506	SLV 13	Si
Maschio 193	V	1.034	SLV 3	Si
Maschio 193	PFFP	3.398	SLV 13	Si
Maschio 193	R	0.039	SLV 9	No
Maschio 194	PF SLU	18.59	SLU 78	Si
Maschio 194	V SLU	7.581	SLU 37	Si
Maschio 194	PF	2.606	SLV 13	Si
Maschio 194	V	0.81	SLV 13	No
Maschio 194	PFFP	5.418	SLV 11	Si
Maschio 194	R	0.015	SLV 7	No
Maschio 195	PF SLU	1.858	SLU 78	Si
Maschio 195	V SLU	4.54	SLU 43	Si
Maschio 195	PF	0	SLV 16	No
Maschio 195	V	0	SLV 13	No
Maschio 195	PFFP	6.113	SLV 5	Si
Maschio 195	R	0	SLV 5	No
Maschio 196	PF SLU	16.59	SLU 71	Si
Maschio 196	V SLU	7.706	SLU 51	Si
Maschio 196	PF	4.828	SLV 13	Si
Maschio 196	V	0.903	SLV 15	No
Maschio 196	PFFP	5.199	SLV 5	Si
Maschio 196	R	0.032	SLV 5	No
Maschio 197	PF SLU	4.641	SLU 77	Si
Maschio 197	V SLU	2.768	SLU 41	Si
Maschio 197	PF	2.586	SLV 3	Si
Maschio 197	V	1.057	SLV 15	Si
Maschio 197	PFFP	3.056	SLV 1	Si
Maschio 197	R	0.02	SLV 9	No
Maschio 198	PF SLU	7.55	SLU 39	Si
Maschio 198	V SLU	1.505	SLU 84	Si
Maschio 198	PF	0	SLV 12	No
Maschio 198	V	0	SLV 7	No
Maschio 198	PFFP	0	SLV 12	No
Maschio 198	R	0	SLV 12	No
Maschio 199	PF SLU	0	SLU 39	No
Maschio 199	V SLU	0	SLU 39	No

Desc.	Stato limite	Coeff.s.	Comb.	Verifica
Maschio 199	PF	0	SLV 16	No
Maschio 199	V	0	SLV 1	No
Maschio 199	PFFP	0	SLV 4	No
Maschio 199	R	0	SLV 16	No
Maschio 200	PF SLU	4.96	SLU 84	Si
Maschio 200	V SLU	2.508	SLU 83	Si
Maschio 200	PF	1.862	SLV 7	Si
Maschio 200	V	1.036	SLV 1	Si
Maschio 200	PFFP	3.134	SLV 11	Si
Maschio 200	R	0.033	SLV 11	No
Maschio 201	PF SLU	50.984	SLU 50	Si
Maschio 201	V SLU	16.399	SLU 50	Si
Maschio 201	PF	2.946	SLV 13	Si
Maschio 201	V	1.493	SLV 13	Si
Maschio 201	PFFP	2.895	SLV 5	Si
Maschio 201	R	0.028	SLV 5	No
Maschio 202	PF SLU	24.394	SLU 8	Si
Maschio 202	V SLU	15.241	SLU 50	Si
Maschio 202	PF	2.94	SLV 13	Si
Maschio 202	V	1.556	SLV 13	Si
Maschio 202	PFFP	2.66	SLV 9	Si
Maschio 202	R	0.036	SLV 9	No
Maschio 203	PF SLU	5.489	SLU 82	Si
Maschio 203	V SLU	2.723	SLU 81	Si
Maschio 203	PF	2.006	SLV 11	Si
Maschio 203	V	1.023	SLV 13	Si
Maschio 203	PFFP	3.388	SLV 5	Si
Maschio 203	R	0	SLV 7	No
Maschio 204	PF SLU	21.5	SLU 39	Si
Maschio 204	V SLU	8.33	SLU 50	Si
Maschio 204	PF	3.049	SLV 11	Si
Maschio 204	V	1.244	SLV 11	Si
Maschio 204	PFFP	12.255	SLV 11	Si
Maschio 204	R	0.187	SLV 7	No
Maschio 205	PF SLU	25.856	SLU 48	Si
Maschio 205	V SLU	5.328	SLU 51	Si
Maschio 205	PF	2.944	SLV 15	Si
Maschio 205	V	1.351	SLV 15	Si
Maschio 205	PFFP	8.268	SLV 11	Si
Maschio 205	R	0.247	SLV 1	No
Maschio 206	PF SLU	0	SLU 1	No
Maschio 206	V SLU	0	SLU 1	No
Maschio 206	PF	0	SLV 1	No
Maschio 206	V	0	SLV 1	No
Maschio 206	PFFP	11.432	SLV 1	Si
Maschio 206	R	0.124	SLV 5	No
Maschio 207	PF SLU	0	SLU 1	No
Maschio 207	V SLU	0	SLU 1	No
Maschio 207	PF	0	SLV 1	No
Maschio 207	V	0	SLV 1	No
Maschio 207	PFFP	7.533	SLV 7	Si
Maschio 207	R	0.107	SLV 3	No
Maschio 208	PF SLU	15.504	SLU 69	Si
Maschio 208	V SLU	6.79	SLU 41	Si
Maschio 208	PF	5.477	SLV 7	Si
Maschio 208	V	1.037	SLV 7	Si
Maschio 208	PFFP	8.164	SLV 11	Si
Maschio 208	R	0.125	SLV 1	No
Maschio 210	PF SLU	16.136	SLU 69	Si
Maschio 210	V SLU	2.612	SLU 77	Si
Maschio 210	PF	5.809	SLV 7	Si
Maschio 210	V	1.217	SLV 5	Si
Maschio 210	PFFP	4.115	SLV 3	Si
Maschio 210	R	0.017	SLV 3	No
Maschio 211	PF SLU	9.605	SLU 17	Si
Maschio 211	V SLU	68.95	SLU 50	Si
Maschio 211	PF	0	SLV 3	No
Maschio 211	V	0	SLV 3	No
Maschio 211	PFFP	0	SLV 7	No
Maschio 211	R	0.019	SLV 9	No
Maschio 212	PF SLU	8.661	SLU 40	Si
Maschio 212	V SLU	9.152	SLU 42	Si
Maschio 212	PF	0	SLV 16	No
Maschio 212	V	0	SLV 13	No
Maschio 212	PFFP	0	SLV 16	No
Maschio 212	R	0	SLV 16	No
Maschio 213	PF SLU	5.763	SLU 51	Si
Maschio 213	V SLU	2.467	SLU 76	Si
Maschio 213	PF	0	SLV 12	No
Maschio 213	V	0	SLV 1	No
Maschio 213	PFFP	0	SLV 10	No
Maschio 213	R	0	SLV 14	No
Maschio 214	PF SLU	4.774	SLU 39	Si
Maschio 214	V SLU	3.457	SLU 41	Si
Maschio 214	PF	0	SLV 3	No
Maschio 214	V	0	SLV 3	No
Maschio 214	PFFP	1.941	SLV 15	Si
Maschio 214	R	0	SLV 7	No
Maschio 215	PF SLU	0	SLU 2	No
Maschio 215	V SLU	0	SLU 2	No
Maschio 215	PF	0	SLV 8	No
Maschio 215	V	0	SLV 1	No

Desc.	Stato limite	Coeff.s.	Comb.	Verifica
Maschio 215	PFFP	2.2	SLV 15	Si
Maschio 215	R	0	SLV 8	No
Maschio 216	PF SLU	2.652	SLU 31	Si
Maschio 216	V SLU	5.036	SLU 77	Si
Maschio 216	PF	0	SLV 12	No
Maschio 216	V	0	SLV 1	No
Maschio 216	PFFP	1.893	SLV 5	Si
Maschio 216	R	0	SLV 14	No
Maschio 217	PF SLU	3.505	SLU 35	Si
Maschio 217	V SLU	3.702	SLU 2	Si
Maschio 217	PF	1.786	SLV 7	Si
Maschio 217	V	0.536	SLV 7	No
Maschio 217	PFFP	1.643	SLV 3	Si
Maschio 217	R	0.016	SLV 5	No
Maschio 218	PF SLU	6.652	SLU 67	Si
Maschio 218	V SLU	3.744	SLU 84	Si
Maschio 218	PF	0	SLV 1	No
Maschio 218	V	0	SLV 1	No
Maschio 218	PFFP	1.036	SLV 3	Si
Maschio 218	R	0	SLV 11	No
Maschio 219	PF SLU	1.433	SLU 83	Si
Maschio 219	V SLU	1.797	SLU 41	Si
Maschio 219	PF	0	SLV 16	No
Maschio 219	V	0	SLV 1	No
Maschio 219	PFFP	0	SLV 16	No
Maschio 219	R	0	SLV 10	No
Maschio 220	PF SLU	6.554	SLU 40	Si
Maschio 220	V SLU	7.109	SLU 78	Si
Maschio 220	PF	0	SLV 5	No
Maschio 220	V	0	SLV 5	No
Maschio 220	PFFP	0	SLV 5	No
Maschio 220	R	0.018	SLV 13	No
Maschio 221	PF SLU	10.879	SLU 39	Si
Maschio 221	V SLU	3.044	SLU 83	Si
Maschio 221	PF	1.053	SLV 5	Si
Maschio 221	V	0.541	SLV 5	No
Maschio 221	PFFP	2.725	SLV 5	Si
Maschio 221	R	0.056	SLV 15	No
Maschio 222	PF SLU	7.123	SLU 44	Si
Maschio 222	V SLU	13.278	SLU 2	Si
Maschio 222	PF	0	SLV 1	No
Maschio 222	V	0	SLV 1	No
Maschio 222	PFFP	2.368	SLV 3	Si
Maschio 222	R	0	SLV 5	No
Maschio 223	PF SLU	13.325	SLU 77	Si
Maschio 223	V SLU	4.005	SLU 81	Si
Maschio 223	PF	2.015	SLV 15	Si
Maschio 223	V	0.867	SLV 3	No
Maschio 223	PFFP	2.948	SLV 7	Si
Maschio 223	R	0.052	SLV 13	No
Maschio 224	PF SLU	9.936	SLU 44	Si
Maschio 224	V SLU	8.15	SLU 41	Si
Maschio 224	PF	1.341	SLV 3	Si
Maschio 224	V	1.23	SLV 3	Si
Maschio 224	PFFP	1.884	SLV 7	Si
Maschio 224	R	0.043	SLV 7	No
Maschio 225	PF SLU	7.391	SLU 80	Si
Maschio 225	V SLU	3.747	SLU 72	Si
Maschio 225	PF	2.61	SLV 1	Si
Maschio 225	V	1.297	SLV 15	Si
Maschio 225	PFFP	2.06	SLV 5	Si
Maschio 225	R	0	SLV 5	No
Maschio 226	PF SLU	4.076	SLU 80	Si
Maschio 226	V SLU	1.663	SLU 84	Si
Maschio 226	PF	2.401	SLV 15	Si
Maschio 226	V	1.257	SLV 15	Si
Maschio 226	PFFP	2.234	SLV 5	Si
Maschio 226	R	0.014	SLV 5	No
Maschio 227	PF SLU	13.657	SLU 80	Si
Maschio 227	V SLU	24.035	SLU 2	Si
Maschio 227	PF	4.116	SLV 7	Si
Maschio 227	V	1.802	SLV 5	Si
Maschio 227	PFFP	2.683	SLV 1	Si
Maschio 227	R	0.052	SLV 13	No
Maschio 228	PF SLU	3.036	SLU 37	Si
Maschio 228	V SLU	3.617	SLU 79	Si
Maschio 228	PF	1.991	SLV 7	Si
Maschio 228	V	1.681	SLV 7	Si
Maschio 228	PFFP	1.149	SLV 15	Si
Maschio 228	R	0	SLV 12	No
Maschio 229	PF SLU	4.874	SLU 8	Si
Maschio 229	V SLU	2.955	SLU 80	Si
Maschio 229	PF	2.045	SLV 9	Si
Maschio 229	V	1.66	SLV 9	Si
Maschio 229	PFFP	1.513	SLV 13	Si
Maschio 229	R	0.009	SLV 1	No
Maschio 230	PF SLU	1.59	SLU 40	Si
Maschio 230	V SLU	1.141	SLU 40	Si
Maschio 230	PF	0	SLV 1	No
Maschio 230	V	0	SLV 1	No
Maschio 230	PFFP	1.181	SLV 1	Si
Maschio 230	R	0	SLV 11	No

Desc.	Stato limite	Coeff.s.	Comb.	Verifica
Maschio 231	PF SLU	4.291	SLU 8	Si
Maschio 231	V SLU	2.024	SLU 80	Si
Maschio 231	PF	0	SLV 14	No
Maschio 231	V	0	SLV 5	No
Maschio 231	PFFP	0	SLV 14	No
Maschio 231	R	0	SLV 16	No
Maschio 232	PF SLU	2.348	SLU 39	Si
Maschio 232	V SLU	1.84	SLU 77	Si
Maschio 232	PF	0	SLV 3	No
Maschio 232	V	0	SLV 3	No
Maschio 232	PFFP	1.376	SLV 7	Si
Maschio 232	R	0.013	SLV 13	No
Maschio 233	PF SLU	8.442	SLU 39	Si
Maschio 233	V SLU	4.14	SLU 80	Si
Maschio 233	PF	0	SLV 11	No
Maschio 233	V	0	SLV 11	No
Maschio 233	PFFP	0	SLV 7	No
Maschio 233	R	0.041	SLV 5	No
Maschio 234	PF SLU	2.186	SLU 10	Si
Maschio 234	V SLU	4.672	SLU 55	Si
Maschio 234	PF	0	SLV 10	No
Maschio 234	V	0	SLV 1	No
Maschio 234	PFFP	0	SLV 4	No
Maschio 234	R	0	SLV 10	No
Maschio 235	PF SLU	0.96	SLU 72	No
Maschio 235	V SLU	0.229	SLU 26	No
Maschio 235	PF	0	SLV 3	No
Maschio 235	V	0	SLV 3	No
Maschio 235	PFFP	0	SLV 9	No
Maschio 235	R	0	SLV 3	No
Maschio 236	PF SLU	0	SLU 10	No
Maschio 236	V SLU	0	SLU 10	No
Maschio 236	PF	0	SLV 16	No
Maschio 236	V	0	SLV 3	No
Maschio 236	PFFP	0	SLV 16	No
Maschio 236	R	0	SLV 14	No
Maschio 237	PF SLU	7.703	SLU 39	Si
Maschio 237	V SLU	8.251	SLU 83	Si
Maschio 237	PF	0	SLV 5	No
Maschio 237	V	0	SLV 5	No
Maschio 237	PFFP	0	SLV 5	No
Maschio 237	R	0.02	SLV 13	No
Maschio 238	PF SLU	1.615	SLU 39	Si
Maschio 238	V SLU	2.277	SLU 81	Si
Maschio 238	PF	0	SLV 16	No
Maschio 238	V	0	SLV 1	No
Maschio 238	PFFP	0	SLV 16	No
Maschio 238	R	0	SLV 16	No
Maschio 239	PF SLU	2.324	SLU 34	Si
Maschio 239	V SLU	11.476	SLU 5	Si
Maschio 239	PF	0	SLV 1	No
Maschio 239	V	0	SLV 1	No
Maschio 239	PFFP	0	SLV 1	No
Maschio 239	R	0	SLV 14	No
Maschio 240	PF SLU	0	SLU 10	No
Maschio 240	V SLU	0	SLU 10	No
Maschio 240	PF	0	SLV 12	No
Maschio 240	V	0	SLV 1	No
Maschio 240	PFFP	0	SLV 10	No
Maschio 240	R	0	SLV 12	No
Maschio 241	PF SLU	1.17	SLU 39	Si
Maschio 241	V SLU	0.47	SLU 39	No
Maschio 241	PF	0	SLV 4	No
Maschio 241	V	0	SLV 1	No
Maschio 241	PFFP	0	SLV 4	No
Maschio 241	R	0	SLV 10	No
Maschio 242	PF SLU	0	SLU 84	No
Maschio 242	V SLU	0	SLU 1	No
Maschio 242	PF	0	SLV 16	No
Maschio 242	V	0	SLV 1	No
Maschio 242	PFFP	0	SLV 1	No
Maschio 242	R	0	SLV 16	No
Maschio 243	PF SLU	2.577	SLU 28	Si
Maschio 243	V SLU	8.307	SLU 78	Si
Maschio 243	PF	0	SLV 7	No
Maschio 243	V	0	SLV 7	No
Maschio 243	PFFP	0	SLV 15	No
Maschio 243	R	0.079	SLV 11	No
Maschio 244	PF SLU	2.077	SLU 37	Si
Maschio 244	V SLU	2.152	SLU 41	Si
Maschio 244	PF	1.437	SLV 9	Si
Maschio 244	V	1.301	SLV 3	Si
Maschio 244	PFFP	1.085	SLV 9	Si
Maschio 244	R	0.081	SLV 7	No
Maschio 245	PF SLU	8.949	SLU 39	Si
Maschio 245	V SLU	3.709	SLU 37	Si
Maschio 245	PF	1.102	SLV 13	Si
Maschio 245	V	0.384	SLV 13	No
Maschio 245	PFFP	2.996	SLV 11	Si
Maschio 245	R	0.033	SLV 11	No
Maschio 246	PF SLU	4.781	SLU 41	Si
Maschio 246	V SLU	8.25	SLU 41	Si

Desc.	Stato limite	Coeff.s.	Comb.	Verifica
Maschio 246	PF	0	SLV 16	No
Maschio 246	V	0	SLV 9	No
Maschio 246	PFFP	0	SLV 16	No
Maschio 246	R	0	SLV 16	No
Maschio 247	PF SLU	0	SLU 1	No
Maschio 247	V SLU	0	SLU 1	No
Maschio 247	PF	0	SLV 16	No
Maschio 247	V	0	SLV 1	No
Maschio 247	PFFP	3.961	SLV 11	Si
Maschio 247	R	0	SLV 16	No
Maschio 248	PF SLU	2.641	SLU 79	Si
Maschio 248	V SLU	6.384	SLU 78	Si
Maschio 248	PF	1.717	SLV 13	Si
Maschio 248	V	1.247	SLV 15	Si
Maschio 248	PFFP	1.903	SLV 1	Si
Maschio 248	R	0.069	SLV 5	No
Maschio 249	PF SLU	3.128	SLU 42	Si
Maschio 249	V SLU	12.921	SLU 84	Si
Maschio 249	PF	0	SLV 11	No
Maschio 249	V	0	SLV 11	No
Maschio 249	PFFP	0	SLV 1	No
Maschio 249	R	0	SLV 5	No
Maschio 250	PF SLU	0	SLU 18	No
Maschio 250	V SLU	0	SLU 18	No
Maschio 250	PF	0	SLV 4	No
Maschio 250	V	0	SLV 1	No
Maschio 250	PFFP	0	SLV 4	No
Maschio 250	R	0.014	SLV 1	No
Maschio 251	PF SLU	0	SLU 84	No
Maschio 251	V SLU	0	SLU 1	No
Maschio 251	PF	0	SLV 16	No
Maschio 251	V	0	SLV 1	No
Maschio 251	PFFP	0	SLV 4	No
Maschio 251	R	0	SLV 16	No
Maschio 252	PF SLU	2.056	SLU 37	Si
Maschio 252	V SLU	2.421	SLU 79	Si
Maschio 252	PF	0	SLV 3	No
Maschio 252	V	0	SLV 3	No
Maschio 252	PFFP	0	SLV 8	No
Maschio 252	R	0	SLV 3	No
Maschio 253	PF SLU	11.67	SLU 28	Si
Maschio 253	V SLU	22.854	SLU 75	Si
Maschio 253	PF	2.396	SLV 9	Si
Maschio 253	V	2.232	SLV 1	Si
Maschio 253	PFFP	1.338	SLV 9	Si
Maschio 253	R	0.026	SLV 7	No
Maschio 254	PF SLU	11.606	SLU 37	Si
Maschio 254	V SLU	12.607	SLU 77	Si
Maschio 254	PF	1.701	SLV 5	Si
Maschio 254	V	1.956	SLV 1	Si
Maschio 254	PFFP	1.24	SLV 5	Si
Maschio 254	R	0.032	SLV 11	No
Maschio 255	PF SLU	0	SLU 1	No
Maschio 255	V SLU	0	SLU 1	No
Maschio 255	PF	0	SLV 1	No
Maschio 255	V	0	SLV 1	No
Maschio 255	PFFP	1.304	SLV 11	Si
Maschio 255	R	0.014	SLV 11	No
Maschio 256	PF SLU	3.839	SLU 28	Si
Maschio 256	V SLU	9.069	SLU 78	Si
Maschio 256	PF	0	SLV 3	No
Maschio 256	V	0	SLV 3	No
Maschio 256	PFFP	1.183	SLV 3	Si
Maschio 256	R	0.089	SLV 9	No
Maschio 257	PF SLU	0	SLU 84	No
Maschio 257	V SLU	0	SLU 1	No
Maschio 257	PF	0	SLV 16	No
Maschio 257	V	0	SLV 1	No
Maschio 257	PFFP	0	SLV 1	No
Maschio 257	R	0	SLV 16	No
Maschio 258	PF SLU	1.851	SLU 39	Si
Maschio 258	V SLU	1.34	SLU 39	Si
Maschio 258	PF	0	SLV 16	No
Maschio 258	V	0	SLV 1	No
Maschio 258	PFFP	0	SLV 16	No
Maschio 258	R	0	SLV 10	No
Maschio 259	PF SLU	0	SLU 83	No
Maschio 259	V SLU	0	SLU 1	No
Maschio 259	PF	0	SLV 16	No
Maschio 259	V	0	SLV 3	No
Maschio 259	PFFP	0	SLV 1	No
Maschio 259	R	0	SLV 16	No
Maschio 260	PF SLU	1.513	SLU 39	Si
Maschio 260	V SLU	2.501	SLU 83	Si
Maschio 260	PF	0	SLV 12	No
Maschio 260	V	0	SLV 1	No
Maschio 260	PFFP	0	SLV 4	No
Maschio 260	R	0	SLV 5	No
Maschio 261	PF SLU	0	SLU 84	No
Maschio 261	V SLU	0	SLU 1	No
Maschio 261	PF	0	SLV 16	No
Maschio 261	V	0	SLV 1	No

Desc.	Stato limite	Coeff.s.	Comb.	Verifica
Maschio 261	PFFP	0	SLV 16	No
Maschio 261	R	0	SLV 14	No
Maschio 262	PF SLU	3.881	SLU 9	Si
Maschio 262	V SLU	3.187	SLU 72	Si
Maschio 262	PF	0	SLV 5	No
Maschio 262	V	0	SLV 5	No
Maschio 262	PFFP	0	SLV 7	No
Maschio 262	R	0.02	SLV 1	No
Maschio 263	PF SLU	0	SLU 1	No
Maschio 263	V SLU	0	SLU 1	No
Maschio 263	PF	0	SLV 1	No
Maschio 263	V	0	SLV 1	No
Maschio 263	PFFP	0	SLV 6	No
Maschio 263	R	0	SLV 7	No
Maschio 264	PF SLU	3.228	SLU 10	Si
Maschio 264	V SLU	5.95	SLU 49	Si
Maschio 264	PF	0	SLV 10	No
Maschio 264	V	0	SLV 1	No
Maschio 264	PFFP	0	SLV 10	No
Maschio 264	R	0	SLV 10	No
Maschio 265	PF SLU	7.716	SLU 2	Si
Maschio 265	V SLU	10.939	SLU 45	Si
Maschio 265	PF	1.059	SLV 7	Si
Maschio 265	V	0.448	SLV 7	No
Maschio 265	PFFP	0	SLV 3	No
Maschio 265	R	0.058	SLV 9	No
Maschio 266	PF SLU	6.244	SLU 39	Si
Maschio 266	V SLU	3.805	SLU 77	Si
Maschio 266	PF	1.262	SLV 11	Si
Maschio 266	V	0.917	SLV 11	No
Maschio 266	PFFP	1.218	SLV 11	Si
Maschio 266	R	0.045	SLV 1	No
Maschio 267	PF SLU	3.572	SLU 40	Si
Maschio 267	V SLU	2.491	SLU 80	Si
Maschio 267	PF	0	SLV 6	No
Maschio 267	V	0	SLV 5	No
Maschio 267	PFFP	0	SLV 1	No
Maschio 267	R	0.025	SLV 11	No
Maschio 268	PF SLU	1.62	SLU 40	Si
Maschio 268	V SLU	1.265	SLU 40	Si
Maschio 268	PF	0	SLV 5	No
Maschio 268	V	0	SLV 5	No
Maschio 268	PFFP	1.135	SLV 13	Si
Maschio 268	R	0.019	SLV 7	No
Maschio 269	PF SLU	7.785	SLU 39	Si
Maschio 269	V SLU	7.502	SLU 77	Si
Maschio 269	PF	3.358	SLV 11	Si
Maschio 269	V	2.035	SLV 7	Si
Maschio 269	PFFP	1.249	SLV 3	Si
Maschio 269	R	0	SLV 13	No
Maschio 270	PF SLU	12.139	SLU 39	Si
Maschio 270	V SLU	6.29	SLU 77	Si
Maschio 270	PF	2.058	SLV 1	Si
Maschio 270	V	1.963	SLV 5	Si
Maschio 270	PFFP	1.348	SLV 3	Si
Maschio 270	R	0	SLV 1	No
Maschio 271	PF SLU	0	SLU 2	No
Maschio 271	V SLU	0	SLU 2	No
Maschio 271	PF	0	SLV 16	No
Maschio 271	V	0	SLV 1	No
Maschio 271	PFFP	0	SLV 10	No
Maschio 271	R	0	SLV 16	No
Maschio 272	PF SLU	1.366	SLU 31	Si
Maschio 272	V SLU	1.502	SLU 31	Si
Maschio 272	PF	0	SLV 16	No
Maschio 272	V	0	SLV 1	No
Maschio 272	PFFP	0	SLV 16	No
Maschio 272	R	0	SLV 10	No
Maschio 273	PF SLU	4.744	SLU 40	Si
Maschio 273	V SLU	7.098	SLU 77	Si
Maschio 273	PF	0	SLV 14	No
Maschio 273	V	0	SLV 1	No
Maschio 273	PFFP	3.164	SLV 11	Si
Maschio 273	R	0	SLV 14	No
Maschio 274	PF SLU	2.37	SLU 40	Si
Maschio 274	V SLU	2.319	SLU 84	Si
Maschio 274	PF	0	SLV 6	No
Maschio 274	V	0	SLV 1	No
Maschio 274	PFFP	0	SLV 6	No
Maschio 274	R	0	SLV 6	No
Maschio 275	PF SLU	2.462	SLU 35	Si
Maschio 275	V SLU	1.92	SLU 77	Si
Maschio 275	PF	1.283	SLV 13	Si
Maschio 275	V	0.367	SLV 13	No
Maschio 275	PFFP	1.264	SLV 3	Si
Maschio 275	R	0.077	SLV 15	No
Maschio 276	PF SLU	2.907	SLU 28	Si
Maschio 276	V SLU	3.859	SLU 77	Si
Maschio 276	PF	1.896	SLV 1	Si
Maschio 276	V	0.826	SLV 1	No
Maschio 276	PFFP	1.469	SLV 15	Si
Maschio 276	R	0.079	SLV 13	No

Desc.	Stato limite	Coeff.s.	Comb.	Verifica
Maschio 277	PF SLU	3.391	SLU 40	Si
Maschio 277	V SLU	3.964	SLU 84	Si
Maschio 277	PF	0	SLV 16	No
Maschio 277	V	0	SLV 9	No
Maschio 277	PFFP	0	SLV 16	No
Maschio 277	R	0	SLV 16	No
Maschio 278	PF SLU	1.717	SLU 2	Si
Maschio 278	V SLU	9.032	SLU 44	Si
Maschio 278	PF	0	SLV 16	No
Maschio 278	V	0	SLV 1	No
Maschio 278	PFFP	4.475	SLV 9	Si
Maschio 278	R	0	SLV 14	No
Maschio 281	PF SLU	1.924	SLU 84	Si
Maschio 281	V SLU	2.117	SLU 84	Si
Maschio 281	PF	0	SLV 16	No
Maschio 281	V	0	SLV 7	No
Maschio 281	PFFP	4.702	SLV 11	Si
Maschio 281	R	0	SLV 16	No
Maschio 282	PF SLU	1.186	SLU 84	Si
Maschio 282	V SLU	1.071	SLU 84	Si
Maschio 282	PF	0	SLV 8	No
Maschio 282	V	0	SLV 1	No
Maschio 282	PFFP	7.669	SLV 7	Si
Maschio 282	R	0.17	SLV 13	No
Maschio 283	PF SLU	5.155	SLU 84	Si
Maschio 283	V SLU	7.877	SLU 82	Si
Maschio 283	PF	0	SLV 16	No
Maschio 283	V	0	SLV 3	No
Maschio 283	PFFP	3.857	SLV 7	Si
Maschio 283	R	0	SLV 12	No
Maschio 284	PF SLU	4.87	SLU 82	Si
Maschio 284	V SLU	3.452	SLU 81	Si
Maschio 284	PF	0	SLV 4	No
Maschio 284	V	0	SLV 1	No
Maschio 284	PFFP	3.397	SLV 7	Si
Maschio 284	R	0	SLV 8	No
Maschio 285	PF SLU	5.912	SLU 83	Si
Maschio 285	V SLU	4.409	SLU 82	Si
Maschio 285	PF	0	SLV 4	No
Maschio 285	V	0	SLV 1	No
Maschio 285	PFFP	2.606	SLV 7	Si
Maschio 285	R	0.069	SLV 9	No
Maschio 286	PF SLU	4.803	SLU 81	Si
Maschio 286	V SLU	4.899	SLU 61	Si
Maschio 286	PF	0	SLV 1	No
Maschio 286	V	0	SLV 1	No
Maschio 286	PFFP	2.727	SLV 11	Si
Maschio 286	R	0.068	SLV 13	No
Maschio 287	PF SLU	10.443	SLU 81	Si
Maschio 287	V SLU	5.485	SLU 84	Si
Maschio 287	PF	1.108	SLV 11	Si
Maschio 287	V	2.066	SLV 3	Si
Maschio 287	PFFP	8.263	SLV 11	Si
Maschio 287	R	0.435	SLV 9	No
Maschio 288	PF SLU	5.99	SLU 81	Si
Maschio 288	V SLU	3.064	SLU 82	Si
Maschio 288	PF	0	SLV 3	No
Maschio 288	V	0	SLV 3	No
Maschio 288	PFFP	0.993	SLV 7	No
Maschio 288	R	0	SLV 16	No
Maschio 289	PF SLU	4.104	SLU 81	Si
Maschio 289	V SLU	5.135	SLU 50	Si
Maschio 289	PF	0	SLV 8	No
Maschio 289	V	0	SLV 3	No
Maschio 289	PFFP	0	SLV 7	No
Maschio 289	R	0	SLV 8	No
Maschio 290	PF SLU	0	SLU 76	No
Maschio 290	V SLU	0	SLU 2	No
Maschio 290	PF	0	SLV 16	No
Maschio 290	V	0	SLV 1	No
Maschio 290	PFFP	0	SLV 16	No
Maschio 290	R	0	SLV 14	No

Verifica maschi in muratura

Maschio	Stato limite	Molt.	Comb.	PGA	iPGA (ζE)	TR	(TR/TRrif)^.41	Verifica
1	PF	1.311	SLV 15	0.317	1.297	1039	1.378	Si
	V	1.035	SLV 9	0.252	1.033	523	1.04	Si
	PFFP	1.555	SLV 13	0.362	1.483	1618	1.653	Si
	R	0.363	SLV 1	0.081	0.332	31	0.327	No
2	PF	1.029	SLV 9	0.251	1.028	515	1.034	Si
	V	0.729	SLV 15	0.173	0.706	190	0.687	No
	PFFP	1.127	SLV 9	0.274	1.12	667	1.149	Si
	R	0.339	SLV 1	0.077	0.313	27	0.309	No
3	PF	1.622	SLV 13	0.362	1.483	1618	1.653	Si
	V	0.699	SLV 3	0.165	0.676	172	0.659	No
	PFFP	2.134	SLV 9	0.362	1.483	1618	1.653	Si
	R	0.343	SLV 13	0.077	0.313	27	0.309	No
4	PF	1.116	SLV 5	0.271	1.11	648	1.136	Si
	V	0.801	SLV 5	0.192	0.787	251	0.77	No
	PFFP	1.427	SLV 9	0.344	1.408	1362	1.54	Si
	R	0.274	SLV 15	0.061	0.249	16	0.249	No

Maschio	Stato limite	Molt.	Comb.	PGA	iPGA (ζE)	TR	(TR/TRrif)^.41	Verifica
5	PF	0.667	SLV 7	0.157	0.644	154	0.63	No
	V	0.499	SLV 7	0.116	0.477	75	0.469	No
	PFFP	1.931	SLV 3	0.362	1.483	1618	1.653	Si
	R	0.132	SLV 13	0.026	0.107	2	0.106	No
6	PF	0.806	SLV 11	0.193	0.792	255	0.775	No
	V	0.579	SLV 15	0.135	0.551	107	0.543	No
	PFFP	1.109	SLV 11	0.27	1.103	637	1.128	Si
	R	0.197	SLV 5	0.044	0.181	7	0.177	No
7	PF	0.961	SLV 11	0.234	0.956	422	0.953	No
	V	0.562	SLV 3	0.131	0.535	100	0.528	No
	PFFP	1.724	SLV 11	0.362	1.483	1618	1.653	Si
	R	0.17	SLV 9	0.038	0.157	5	0.155	No
8	PF	1.438	SLV 9	0.347	1.418	1396	1.556	Si
	V	0.827	SLV 15	0.198	0.811	273	0.797	No
	PFFP	2.643	SLV 7	0.362	1.483	1618	1.653	Si
	R	0.198	SLV 5	0.044	0.181	7	0.177	No
9	PF	0.167	SLV 15	0.035	0.143	4	0.141	No
	V	0.142	SLV 15	0.031	0.127	3	0.125	No
	PFFP	2.402	SLV 7	0.362	1.483	1618	1.653	Si
	R	0.144	SLV 5	0.031	0.127	3	0.125	No
10	PF	1.453	SLV 7	0.35	1.433	1444	1.578	Si
	V	0.926	SLV 7	0.224	0.918	378	0.911	No
	PFFP	1000	SLV 1	0.362	1.483	1618	1.653	Si
	R	0.204	SLV 1	0.044	0.181	7	0.177	No
11	PF	0.293	SLV 9	0.069	0.281	21	0.278	No
	V	0.285	SLV 9	0.066	0.269	19	0.267	No
	PFFP	1.616	SLV 11	0.362	1.483	1618	1.653	Si
	R	0.33	SLV 3	0.074	0.303	25	0.299	No
12	PF	0.954	SLV 11	0.232	0.949	413	0.944	No
	V	0.87	SLV 15	0.209	0.857	316	0.846	No
	PFFP	1.183	SLV 11	0.287	1.173	765	1.216	Si
	R	0.234	SLV 5	0.053	0.218	11	0.214	No
13	PF	0.706	SLV 11	0.168	0.687	178	0.669	No
	V	0.553	SLV 11	0.129	0.53	98	0.524	No
	PFFP	1.276	SLV 15	0.308	1.263	954	1.331	Si
	R	0.165	SLV 1	0.035	0.143	4	0.141	No
14	PF	1.084	SLV 7	0.264	1.08	597	1.098	Si
	V	0.293	SLV 9	0.069	0.281	21	0.278	No
	PFFP	1.156	SLV 7	0.28	1.148	717	1.184	Si
	R	0.341	SLV 13	0.077	0.313	27	0.309	No
15	PF	1.098	SLV 9	0.267	1.093	619	1.115	Si
	V	0.656	SLV 9	0.155	0.633	148	0.62	No
	PFFP	1.601	SLV 7	0.362	1.483	1618	1.653	Si
	R	1.271	SLV 9	0.307	1.257	941	1.324	Si
17	PF	2.317	SLV 1	0.362	1.483	1618	1.653	Si
	V	0.833	SLV 7	0.2	0.819	279	0.804	No
	PFFP	3.211	SLV 1	0.362	1.483	1618	1.653	Si
	R	0.419	SLV 1	0.096	0.392	46	0.384	No
18	PF	0	SLV 1	0	0	0	0	No
	V	0	SLV 1	0	0	0	0	No
	PFFP	0.594	SLV 7	0.14	0.571	117	0.563	No
	R	0	SLV 1	0	0	0	0	No
20	PF	0	SLV 1	0	0	0	0	No
	V	0	SLV 1	0	0	0	0	No
	PFFP	2.784	SLV 11	0.362	1.483	1618	1.653	Si
	R	0	SLV 1	0	0	0	0	No
22	PF	2.286	SLV 7	0.362	1.483	1618	1.653	Si
	V	1.221	SLV 11	0.295	1.209	837	1.261	Si
	PFFP	2.959	SLV 7	0.362	1.483	1618	1.653	Si
	R	0.781	SLV 9	0.187	0.766	234	0.748	No
24	PF	1.642	SLV 9	0.362	1.483	1618	1.653	Si
	V	1.606	SLV 9	0.362	1.483	1618	1.653	Si
	PFFP	1.494	SLV 9	0.36	1.472	1579	1.636	Si
	R	0.29	SLV 13	0.066	0.269	19	0.267	No
25	PF	1.129	SLV 9	0.274	1.122	670	1.151	Si
	V	0.574	SLV 1	0.133	0.546	105	0.539	No
	PFFP	1.374	SLV 5	0.331	1.357	1205	1.465	Si
	R	0.261	SLV 5	0.061	0.249	16	0.249	No
26	PF	1.108	SLV 9	0.269	1.102	635	1.126	Si
	V	0.614	SLV 1	0.143	0.587	124	0.577	No
	PFFP	1.755	SLV 9	0.362	1.483	1618	1.653	Si
	R	0.231	SLV 5	0.053	0.218	11	0.214	No
27	PF	1.105	SLV 5	0.269	1.1	631	1.123	Si
	V	0.617	SLV 13	0.144	0.589	125	0.578	No
	PFFP	1.742	SLV 5	0.362	1.483	1618	1.653	Si
	R	0.244	SLV 5	0.057	0.234	13	0.229	No
28	PF	0.933	SLV 9	0.226	0.925	386	0.918	No
	V	0.521	SLV 13	0.12	0.49	81	0.484	No
	PFFP	1.405	SLV 5	0.339	1.386	1295	1.509	Si
	R	0.363	SLV 3	0.081	0.332	31	0.327	No
29	PF	0.881	SLV 7	0.212	0.869	327	0.858	No
	V	0.874	SLV 7	0.21	0.86	318	0.848	No
	PFFP	1.08	SLV 7	0.263	1.076	591	1.094	Si
	R	0.148	SLV 9	0.031	0.127	3	0.125	No
30	PF	1.547	SLV 13	0.362	1.483	1618	1.653	Si
	V	0.694	SLV 3	0.163	0.669	168	0.653	No
	PFFP	1000	SLV 1	0.362	1.483	1618	1.653	Si
	R	0.377	SLV 3	0.085	0.346	35	0.343	No
31	PF	1.587	SLV 13	0.362	1.483	1618	1.653	Si
	V	0.759	SLV 3	0.18	0.738	212	0.718	No
	PFFP	2.586	SLV 5	0.362	1.483	1618	1.653	Si
	R	0.375	SLV 3	0.085	0.346	35	0.343	No

Maschio	Stato limite	Molt.	Comb.	PGA	iPGA (ζE)	TR	(TR/TRrif)^.41	Verifica
32	PF	0.591	SLV 13	0.137	0.562	112	0.553	No
	V	0.696	SLV 13	0.164	0.671	169	0.655	No
	PFFP	1.415	SLV 1	0.341	1.397	1329	1.525	Si
	R	0.316	SLV 9	0.074	0.303	25	0.299	No
33	PF	0.285	SLV 13	0.064	0.262	18	0.261	No
	V	0.297	SLV 13	0.067	0.275	20	0.273	No
	PFFP	1.906	SLV 5	0.362	1.483	1618	1.653	Si
	R	0.407	SLV 3	0.092	0.376	42	0.37	No
34	PF	1.295	SLV 13	0.313	1.281	999	1.356	Si
	V	0.791	SLV 1	0.189	0.773	239	0.755	No
	PFFP	2.271	SLV 9	0.362	1.483	1618	1.653	Si
	R	0.373	SLV 3	0.085	0.346	35	0.343	No
35	PF	0.632	SLV 15	0.148	0.606	134	0.595	No
	V	0.783	SLV 13	0.187	0.765	233	0.747	No
	PFFP	3.363	SLV 5	0.362	1.483	1618	1.653	Si
	R	0.228	SLV 5	0.053	0.218	11	0.214	No
36	PF	2.105	SLV 3	0.362	1.483	1618	1.653	Si
	V	0.563	SLV 15	0.131	0.535	100	0.528	No
	PFFP	1000	SLV 1	0.362	1.483	1618	1.653	Si
	R	0.365	SLV 15	0.082	0.337	33	0.335	No
37	PF	1.404	SLV 11	0.339	1.386	1293	1.508	Si
	V	0.565	SLV 5	0.132	0.542	103	0.534	No
	PFFP	1.699	SLV 11	0.362	1.483	1618	1.653	Si
	R	0.347	SLV 1	0.078	0.318	28	0.313	No
38	PF	1.338	SLV 11	0.323	1.322	1107	1.415	Si
	V	0.806	SLV 9	0.193	0.792	255	0.775	No
	PFFP	1.822	SLV 11	0.362	1.483	1618	1.653	Si
	R	1.261	SLV 1	0.305	1.248	922	1.312	Si
39	PF	2.592	SLV 13	0.362	1.483	1618	1.653	Si
	V	0.774	SLV 11	0.186	0.759	229	0.741	No
	PFFP	2.93	SLV 13	0.362	1.483	1618	1.653	Si
	R	0.262	SLV 3	0.059	0.242	14	0.236	No
41	PF	1.183	SLV 9	0.287	1.173	765	1.216	Si
	V	0.543	SLV 11	0.127	0.52	94	0.515	No
	PFFP	1.417	SLV 13	0.342	1.399	1335	1.528	Si
	R	0.177	SLV 3	0.038	0.157	5	0.155	No
42	PF	0.709	SLV 7	0.169	0.691	181	0.673	No
	V	0.576	SLV 7	0.135	0.553	108	0.545	No
	PFFP	1.266	SLV 7	0.306	1.252	930	1.317	Si
	R	0.164	SLV 13	0.035	0.143	4	0.141	No
43	PF	0.65	SLV 7	0.153	0.627	144	0.613	No
	V	0.637	SLV 7	0.15	0.614	138	0.602	No
	PFFP	1.105	SLV 7	0.269	1.1	631	1.123	Si
	R	0.194	SLV 13	0.041	0.169	6	0.167	No
44	PF	0.397	SLV 3	0.09	0.368	40	0.363	No
	V	0.251	SLV 3	0.055	0.226	12	0.221	No
	PFFP	2.539	SLV 11	0.362	1.483	1618	1.653	Si
	R	0.34	SLV 1	0.077	0.313	27	0.309	No
45	PF	0	SLV 1	0	0	0	0	No
	V	0	SLV 1	0	0	0	0	No
	PFFP	1.045	SLV 5	0.255	1.043	538	1.052	Si
	R	0.191	SLV 11	0.044	0.181	7	0.177	No
46	PF	2.044	SLV 11	0.362	1.483	1618	1.653	Si
	V	0.872	SLV 7	0.21	0.858	316	0.846	No
	PFFP	1000	SLV 1	0.362	1.483	1618	1.653	Si
	R	0.204	SLV 1	0.044	0.181	7	0.177	No
47	PF	1.817	SLV 7	0.362	1.483	1618	1.653	Si
	V	0.952	SLV 13	0.231	0.947	411	0.942	No
	PFFP	2.521	SLV 11	0.362	1.483	1618	1.653	Si
	R	0.326	SLV 5	0.075	0.308	26	0.304	No
48	PF	0.853	SLV 7	0.205	0.84	299	0.827	No
	V	0.593	SLV 7	0.14	0.571	117	0.563	No
	PFFP	3.299	SLV 15	0.362	1.483	1618	1.653	Si
	R	0.199	SLV 3	0.044	0.181	7	0.177	No
49	PF	0.916	SLV 9	0.222	0.907	367	0.9	No
	V	0.92	SLV 9	0.223	0.912	371	0.904	No
	PFFP	1.283	SLV 9	0.31	1.269	968	1.339	Si
	R	0.373	SLV 15	0.085	0.346	35	0.343	No
50	PF	1.393	SLV 7	0.336	1.375	1260	1.492	Si
	V	0.678	SLV 15	0.159	0.652	158	0.637	No
	PFFP	1.68	SLV 7	0.362	1.483	1618	1.653	Si
	R	0.289	SLV 5	0.067	0.275	20	0.273	No
51	PF	1.209	SLV 3	0.293	1.198	815	1.248	Si
	V	0.921	SLV 3	0.223	0.913	373	0.906	No
	PFFP	1.267	SLV 3	0.306	1.254	934	1.319	Si
	R	0.353	SLV 1	0.079	0.323	30	0.322	No
52	PF	1.533	SLV 5	0.362	1.483	1618	1.653	Si
	V	0.808	SLV 1	0.193	0.792	255	0.775	No
	PFFP	2.002	SLV 5	0.362	1.483	1618	1.653	Si
	R	0.359	SLV 13	0.081	0.332	31	0.327	No
53	PF	1.002	SLV 5	0.245	1.002	477	1.002	Si
	V	0.729	SLV 1	0.173	0.706	190	0.687	No
	PFFP	1.06	SLV 5	0.258	1.057	560	1.07	Si
	R	0.378	SLV 13	0.086	0.351	36	0.347	No
54	PF	1.277	SLV 1	0.309	1.264	956	1.332	Si
	V	0.952	SLV 7	0.231	0.947	411	0.942	No
	PFFP	1.391	SLV 1	0.336	1.374	1258	1.491	Si
	R	0.388	SLV 3	0.088	0.359	38	0.355	No
55	PF	1.319	SLV 15	0.319	1.304	1060	1.39	Si
	V	0.911	SLV 11	0.22	0.902	361	0.894	No
	PFFP	1.61	SLV 15	0.362	1.483	1618	1.653	Si
	R	0.061	SLV 1	0	0	0	0	No

Maschio	Stato limite	Molt.	Comb.	PGA	iPGA (ζE)	TR	(TR/TRrif)^.41	Verifica
56	PF	0.951	SLV 5	0.231	0.946	409	0.941	No
	V	0.792	SLV 3	0.189	0.774	240	0.756	No
	PFFP	1.005	SLV 9	0.245	1.005	481	1.005	Si
	R	0.061	SLV 1	0	0	0	0	No
57	PF	1.251	SLV 9	0.302	1.238	898	1.298	Si
	V	0.773	SLV 13	0.184	0.754	224	0.735	No
	PFFP	1.605	SLV 9	0.362	1.483	1618	1.653	Si
	R	0.061	SLV 1	0	0	0	0	No
58	PF	0.636	SLV 7	0.15	0.612	137	0.601	No
	V	0.261	SLV 3	0.059	0.242	14	0.236	No
	PFFP	0.953	SLV 11	0.232	0.948	412	0.943	No
	R	0.061	SLV 1	0	0	0	0	No
59	PF	0.734	SLV 11	0.175	0.718	198	0.699	No
	V	0.4	SLV 15	0.091	0.372	41	0.366	No
	PFFP	0.89	SLV 11	0.215	0.879	337	0.869	No
	R	0.062	SLV 1	0	0	0	0	No
60	PF	0.508	SLV 15	0.116	0.477	75	0.469	No
	V	0.347	SLV 15	0.078	0.318	28	0.313	No
	PFFP	1.755	SLV 11	0.362	1.483	1618	1.653	Si
	R	0.057	SLV 3	0	0	0	0	No
61	PF	1.117	SLV 11	0.271	1.111	650	1.137	Si
	V	0.537	SLV 11	0.125	0.513	90	0.506	No
	PFFP	1.438	SLV 9	0.347	1.418	1396	1.556	Si
	R	0.053	SLV 1	0	0	0	0	No
62	PF	0	SLV 1	0	0	0	0	No
	V	0	SLV 1	0	0	0	0	No
	PFFP	0.881	SLV 5	0.212	0.869	327	0.858	No
	R	0.019	SLV 1	0	0	0	0	No
63	PF	0.909	SLV 9	0.22	0.899	358	0.891	No
	V	0.422	SLV 7	0.098	0.403	50	0.397	No
	PFFP	1.474	SLV 9	0.355	1.453	1512	1.608	Si
	R	0.024	SLV 1	0	0	0	0	No
64	PF	0.699	SLV 7	0.166	0.68	174	0.662	No
	V	0.415	SLV 3	0.095	0.388	45	0.381	No
	PFFP	1.051	SLV 11	0.256	1.049	547	1.06	Si
	R	0.061	SLV 13	0	0	0	0	No
65	PF	2.655	SLV 9	0.362	1.483	1618	1.653	Si
	V	0.634	SLV 9	0.149	0.61	136	0.599	No
	PFFP	1000	SLV 1	0.362	1.483	1618	1.653	Si
	R	0.023	SLV 1	0	0	0	0	No
66	PF	0.109	SLV 9	0.02	0.08	1	0.08	No
	V	0.107	SLV 9	0.02	0.08	1	0.08	No
	PFFP	0.489	SLV 7	0.114	0.468	72	0.461	No
	R	0.07	SLV 1	0	0	0	0	No
67	PF	0.218	SLV 7	0.049	0.201	9	0.197	No
	V	0.202	SLV 9	0.047	0.191	8	0.187	No
	PFFP	0.425	SLV 9	0.099	0.407	51	0.401	No
	R	0.074	SLV 3	0	0	0	0	No
68	PF	0.528	SLV 11	0.124	0.506	87	0.499	No
	V	0.136	SLV 15	0.031	0.127	3	0.125	No
	PFFP	0.992	SLV 7	0.242	0.991	464	0.99	No
	R	0.06	SLV 1	0	0	0	0	No
69	PF	0.752	SLV 11	0.18	0.736	211	0.717	No
	V	0.678	SLV 11	0.16	0.656	160	0.64	No
	PFFP	1.412	SLV 15	0.341	1.394	1320	1.521	Si
	R	0.069	SLV 1	0	0	0	0	No
70	PF	0.601	SLV 15	0.14	0.574	118	0.565	No
	V	0.43	SLV 15	0.098	0.399	49	0.394	No
	PFFP	1.396	SLV 7	0.337	1.378	1269	1.496	Si
	R	0.072	SLV 3	0	0	0	0	No
71	PF	0.687	SLV 11	0.163	0.665	166	0.65	No
	V	0.537	SLV 11	0.125	0.513	90	0.506	No
	PFFP	1.009	SLV 15	0.246	1.009	487	1.01	Si
	R	0.023	SLV 1	0	0	0	0	No
72	PF	1.309	SLV 7	0.316	1.294	1031	1.374	Si
	V	0.931	SLV 9	0.226	0.923	384	0.916	No
	PFFP	1.688	SLV 11	0.362	1.483	1618	1.653	Si
	R	0.275	SLV 1	0.061	0.249	16	0.249	No
73	PF	1.605	SLV 11	0.362	1.483	1618	1.653	Si
	V	1.184	SLV 7	0.287	1.174	767	1.217	Si
	PFFP	1.847	SLV 11	0.362	1.483	1618	1.653	Si
	R	0.361	SLV 1	0.081	0.332	31	0.327	No
75	PF	3.449	SLV 7	0.362	1.483	1618	1.653	Si
	V	0.968	SLV 7	0.236	0.964	431	0.961	No
	PFFP	3.7	SLV 3	0.362	1.483	1618	1.653	Si
	R	0.147	SLV 1	0.031	0.127	3	0.125	No
76	PF	1.509	SLV 5	0.362	1.483	1618	1.653	Si
	V	0.797	SLV 9	0.191	0.783	248	0.766	No
	PFFP	3.073	SLV 5	0.362	1.483	1618	1.653	Si
	R	0.057	SLV 1	0	0	0	0	No
77	PF	3.434	SLV 13	0.362	1.483	1618	1.653	Si
	V	0.716	SLV 3	0.169	0.692	182	0.675	No
	PFFP	3.192	SLV 13	0.362	1.483	1618	1.653	Si
	R	0.059	SLV 1	0	0	0	0	No
78	PF	2.154	SLV 5	0.362	1.483	1618	1.653	Si
	V	0.822	SLV 3	0.197	0.807	268	0.791	No
	PFFP	3.003	SLV 5	0.362	1.483	1618	1.653	Si
	R	0.059	SLV 3	0	0	0	0	No
79	PF	0.265	SLV 3	0.059	0.242	14	0.236	No
	V	0.421	SLV 1	0.096	0.392	46	0.384	No
	PFFP	1.564	SLV 11	0.362	1.483	1618	1.653	Si
	R	0.063	SLV 7	0	0	0	0	No

Maschio	Stato limite	Molt.	Comb.	PGA	iPGA (ζE)	TR	(TR/TRrif)^.41	Verifica
80	PF	1.95	SLV 9	0.362	1.483	1618	1.653	Si
	V	0.765	SLV 15	0.182	0.746	218	0.727	No
	PFFP	2.697	SLV 9	0.362	1.483	1618	1.653	Si
	R	0.059	SLV 1	0	0	0	0	No
81	PF	1.794	SLV 13	0.362	1.483	1618	1.653	Si
	V	0.655	SLV 15	0.154	0.629	145	0.615	No
	PFFP	2.092	SLV 1	0.362	1.483	1618	1.653	Si
	R	0.059	SLV 3	0	0	0	0	No
82	PF	0.561	SLV 11	0.132	0.539	102	0.532	No
	V	0.512	SLV 3	0.118	0.482	78	0.477	No
	PFFP	0.602	SLV 11	0.141	0.578	120	0.569	No
	R	0.022	SLV 1	0	0	0	0	No
83	PF	0.547	SLV 11	0.128	0.523	95	0.517	No
	V	0.378	SLV 13	0.086	0.351	36	0.347	No
	PFFP	0.669	SLV 7	0.158	0.648	156	0.633	No
	R	0.023	SLV 9	0	0	0	0	No
84	PF	0.776	SLV 5	0.186	0.762	231	0.744	No
	V	0.304	SLV 1	0.069	0.281	21	0.278	No
	PFFP	1.285	SLV 9	0.31	1.271	972	1.341	Si
	R	0.061	SLV 1	0	0	0	0	No
85	PF	1.086	SLV 9	0.264	1.082	600	1.101	Si
	V	0.632	SLV 1	0.148	0.606	134	0.595	No
	PFFP	1.373	SLV 9	0.331	1.356	1203	1.464	Si
	R	0.061	SLV 3	0	0	0	0	No
86	PF	1.051	SLV 5	0.256	1.049	547	1.06	Si
	V	0.647	SLV 13	0.152	0.621	141	0.608	No
	PFFP	1.299	SLV 5	0.314	1.284	1006	1.36	Si
	R	0.061	SLV 15	0	0	0	0	No
87	PF	0.691	SLV 9	0.164	0.671	169	0.655	No
	V	0.308	SLV 13	0.069	0.281	21	0.278	No
	PFFP	1.115	SLV 5	0.271	1.109	647	1.135	Si
	R	0.061	SLV 1	0	0	0	0	No
88	PF	1.163	SLV 7	0.282	1.154	729	1.192	Si
	V	0.921	SLV 5	0.223	0.912	372	0.905	No
	PFFP	1.463	SLV 7	0.352	1.442	1476	1.592	Si
	R	0.272	SLV 13	0.061	0.249	16	0.249	No
89	PF	1.445	SLV 11	0.348	1.425	1418	1.566	Si
	V	1.045	SLV 11	0.255	1.043	538	1.052	Si
	PFFP	1.547	SLV 7	0.362	1.483	1618	1.653	Si
	R	0.36	SLV 13	0.081	0.332	31	0.327	No
90	PF	0	SLV 1	0	0	0	0	No
	V	0	SLV 1	0	0	0	0	No
	PFFP	3.62	SLV 7	0.362	1.483	1618	1.653	Si
	R	0.064	SLV 15	0	0	0	0	No
91	PF	2.513	SLV 15	0.362	1.483	1618	1.653	Si
	V	0.872	SLV 11	0.21	0.858	316	0.846	No
	PFFP	3.313	SLV 15	0.362	1.483	1618	1.653	Si
	R	0.131	SLV 1	0.026	0.107	2	0.106	No
93	PF	1.364	SLV 9	0.329	1.347	1177	1.451	Si
	V	0.87	SLV 11	0.209	0.856	315	0.845	No
	PFFP	1.887	SLV 13	0.362	1.483	1618	1.653	Si
	R	0.06	SLV 1	0	0	0	0	No
94	PF	0.659	SLV 7	0.156	0.637	150	0.623	No
	V	0.534	SLV 7	0.125	0.511	89	0.503	No
	PFFP	1.126	SLV 7	0.274	1.12	665	1.148	Si
	R	0.023	SLV 1	0	0	0	0	No
95	PF	0.643	SLV 3	0.151	0.617	139	0.604	No
	V	0.479	SLV 3	0.11	0.448	65	0.442	No
	PFFP	1.471	SLV 11	0.354	1.45	1502	1.603	Si
	R	0.072	SLV 1	0	0	0	0	No
96	PF	0.201	SLV 11	0.047	0.191	8	0.187	No
	V	0.214	SLV 11	0.049	0.201	9	0.197	No
	PFFP	1.138	SLV 1	0.276	1.131	686	1.163	Si
	R	0.073	SLV 1	0	0	0	0	No
97	PF	0.658	SLV 3	0.154	0.631	147	0.618	No
	V	0.361	SLV 3	0.081	0.332	31	0.327	No
	PFFP	1.225	SLV 11	0.296	1.212	845	1.266	Si
	R	0.061	SLV 13	0	0	0	0	No
98	PF	0	SLV 1	0	0	0	0	No
	V	0	SLV 1	0	0	0	0	No
	PFFP	0.264	SLV 11	0.061	0.249	16	0.249	No
	R	0.074	SLV 13	0	0	0	0	No
99	PF	0	SLV 1	0	0	0	0	No
	V	0	SLV 1	0	0	0	0	No
	PFFP	0.719	SLV 5	0.171	0.701	187	0.682	No
	R	0.074	SLV 3	0	0	0	0	No
100	PF	2.416	SLV 5	0.362	1.483	1618	1.653	Si
	V	0.557	SLV 11	0.131	0.535	100	0.528	No
	PFFP	3.611	SLV 7	0.362	1.483	1618	1.653	Si
	R	0.022	SLV 1	0	0	0	0	No
101	PF	0.691	SLV 11	0.164	0.671	169	0.655	No
	V	0.312	SLV 13	0.07	0.286	22	0.284	No
	PFFP	1.039	SLV 7	0.253	1.037	529	1.045	Si
	R	0.061	SLV 1	0	0	0	0	No
102	PF	0.289	SLV 11	0.067	0.275	20	0.273	No
	V	0.262	SLV 11	0.061	0.249	16	0.249	No
	PFFP	0.541	SLV 11	0.127	0.518	93	0.512	No
	R	0.022	SLV 1	0	0	0	0	No
103	PF	1.419	SLV 9	0.342	1.4	1338	1.529	Si
	V	0.48	SLV 11	0.112	0.457	68	0.451	No
	PFFP	2.176	SLV 9	0.362	1.483	1618	1.653	Si
	R	0.023	SLV 1	0	0	0	0	No

Maschio	Stato limite	Molt.	Comb.	PGA	iPGA (ζE)	TR	(TR/TRrif)^.41	Verifica
104	PF	0.976	SLV 11	0.238	0.973	441	0.97	No
	V	0.473	SLV 7	0.11	0.451	66	0.445	No
	PFFP	1.331	SLV 5	0.321	1.315	1088	1.405	Si
	R	0.06	SLV 1	0	0	0	0	No
105	PF	0.662	SLV 13	0.155	0.635	149	0.622	No
	V	0.72	SLV 13	0.17	0.698	185	0.679	No
	PFFP	1.729	SLV 7	0.362	1.483	1618	1.653	Si
	R	0.059	SLV 1	0	0	0	0	No
106	PF	1.202	SLV 7	0.291	1.191	800	1.238	Si
	V	0.577	SLV 3	0.134	0.548	106	0.541	No
	PFFP	1.238	SLV 7	0.299	1.225	871	1.282	Si
	R	0.06	SLV 13	0	0	0	0	No
107	PF	0.973	SLV 3	0.237	0.97	437	0.966	No
	V	0.859	SLV 3	0.207	0.845	304	0.833	No
	PFFP	1.162	SLV 7	0.282	1.153	727	1.191	Si
	R	0.061	SLV 1	0	0	0	0	No
108	PF	1.354	SLV 1	0.327	1.338	1153	1.438	Si
	V	0.774	SLV 15	0.185	0.755	225	0.736	No
	PFFP	1.653	SLV 5	0.362	1.483	1618	1.653	Si
	R	0.06	SLV 3	0	0	0	0	No
109	PF	1.029	SLV 5	0.251	1.028	515	1.034	Si
	V	0.91	SLV 13	0.22	0.901	360	0.893	No
	PFFP	1.09	SLV 5	0.265	1.085	607	1.106	Si
	R	0.061	SLV 1	0	0	0	0	No
110	PF	1.39	SLV 1	0.335	1.373	1255	1.489	Si
	V	0.82	SLV 7	0.197	0.807	268	0.791	No
	PFFP	1.471	SLV 1	0.355	1.451	1506	1.605	Si
	R	0.061	SLV 13	0	0	0	0	No
111	PF	1.402	SLV 15	0.338	1.385	1290	1.506	Si
	V	1.008	SLV 11	0.246	1.007	485	1.009	Si
	PFFP	1.468	SLV 15	0.354	1.448	1496	1.601	Si
	R	0.061	SLV 1	0	0	0	0	No
112	PF	1.473	SLV 9	0.355	1.452	1509	1.606	Si
	V	0.911	SLV 9	0.22	0.902	361	0.894	No
	PFFP	1.525	SLV 9	0.362	1.483	1618	1.653	Si
	R	0.061	SLV 3	0	0	0	0	No
113	PF	1.2	SLV 9	0.291	1.189	797	1.236	Si
	V	1.072	SLV 1	0.261	1.069	579	1.085	Si
	PFFP	1.251	SLV 9	0.302	1.238	898	1.298	Si
	R	0.061	SLV 1	0	0	0	0	No
114	PF	1.366	SLV 9	0.33	1.349	1183	1.454	Si
	V	1.028	SLV 13	0.251	1.027	514	1.033	Si
	PFFP	1.532	SLV 9	0.362	1.483	1618	1.653	Si
	R	0.061	SLV 1	0	0	0	0	No
115	PF	0.971	SLV 15	0.236	0.967	435	0.965	No
	V	0.644	SLV 3	0.151	0.617	139	0.604	No
	PFFP	1.278	SLV 15	0.309	1.265	958	1.333	Si
	R	0.061	SLV 1	0	0	0	0	No
116	PF	1.438	SLV 11	0.347	1.418	1396	1.556	Si
	V	0.621	SLV 15	0.145	0.593	127	0.582	No
	PFFP	1.356	SLV 11	0.327	1.339	1156	1.44	Si
	R	0.062	SLV 1	0	0	0	0	No
117	PF	0.386	SLV 13	0.088	0.359	38	0.355	No
	V	0.336	SLV 13	0.075	0.308	26	0.304	No
	PFFP	1.569	SLV 11	0.362	1.483	1618	1.653	Si
	R	0.062	SLV 3	0	0	0	0	No
118	PF	1.253	SLV 5	0.303	1.24	903	1.301	Si
	V	0.784	SLV 5	0.188	0.77	237	0.752	No
	PFFP	1.684	SLV 9	0.362	1.483	1618	1.653	Si
	R	0.06	SLV 1	0	0	0	0	No
119	PF	0.254	SLV 5	0.059	0.242	14	0.236	No
	V	0.249	SLV 5	0.057	0.234	13	0.229	No
	PFFP	0.589	SLV 11	0.138	0.565	113	0.555	No
	R	0.021	SLV 1	0	0	0	0	No
120	PF	0.946	SLV 9	0.23	0.94	402	0.934	No
	V	0.46	SLV 9	0.107	0.439	62	0.434	No
	PFFP	1.102	SLV 9	0.268	1.097	625	1.119	Si
	R	0.021	SLV 1	0	0	0	0	No
121	PF	0.622	SLV 13	0.145	0.593	127	0.582	No
	V	0.42	SLV 13	0.096	0.392	46	0.384	No
	PFFP	1.11	SLV 11	0.27	1.104	639	1.129	Si
	R	0.06	SLV 15	0	0	0	0	No
122	PF	1.881	SLV 9	0.362	1.483	1618	1.653	Si
	V	0.502	SLV 7	0.117	0.479	77	0.474	No
	PFFP	2.258	SLV 11	0.362	1.483	1618	1.653	Si
	R	0.021	SLV 1	0	0	0	0	No
123	PF	0.447	SLV 5	0.104	0.427	57	0.419	No
	V	0.437	SLV 5	0.102	0.417	54	0.41	No
	PFFP	0.751	SLV 5	0.18	0.735	210	0.716	No
	R	0.021	SLV 1	0	0	0	0	No
124	PF	0.244	SLV 3	0.053	0.218	11	0.214	No
	V	0.175	SLV 3	0.038	0.157	5	0.155	No
	PFFP	1.119	SLV 11	0.272	1.113	654	1.14	Si
	R	0.073	SLV 13	0	0	0	0	No
125	PF	0.34	SLV 7	0.079	0.323	30	0.322	No
	V	0.327	SLV 7	0.077	0.313	27	0.309	No
	PFFP	1.261	SLV 9	0.305	1.247	919	1.311	Si
	R	0.074	SLV 1	0	0	0	0	No
126	PF	0.827	SLV 15	0.198	0.811	273	0.797	No
	V	0.46	SLV 15	0.105	0.43	58	0.422	No
	PFFP	1.601	SLV 7	0.362	1.483	1618	1.653	Si
	R	0.061	SLV 1	0	0	0	0	No

Maschio	Stato limite	Molt.	Comb.	PGA	iPGA (ζE)	TR	(TR/TRrif)^.41	Verifica
127	PF	0.544	SLV 5	0.127	0.52	94	0.515	No
	V	0.512	SLV 5	0.12	0.49	81	0.484	No
	PFFP	2.756	SLV 15	0.362	1.483	1618	1.653	Si
	R	0.07	SLV 3	0	0	0	0	No
128	PF	0.904	SLV 15	0.219	0.895	353	0.885	No
	V	0.591	SLV 15	0.137	0.562	112	0.553	No
	PFFP	1.321	SLV 7	0.319	1.305	1062	1.391	Si
	R	0.073	SLV 13	0	0	0	0	No
129	PF	0.84	SLV 15	0.202	0.826	286	0.812	No
	V	0.657	SLV 11	0.155	0.635	149	0.622	No
	PFFP	1.054	SLV 15	0.257	1.052	552	1.064	Si
	R	0.021	SLV 1	0	0	0	0	No
130	PF	1.644	SLV 7	0.362	1.483	1618	1.653	Si
	V	1.152	SLV 7	0.279	1.144	709	1.178	Si
	PFFP	1.962	SLV 7	0.362	1.483	1618	1.653	Si
	R	0.292	SLV 13	0.066	0.269	19	0.267	No
131	PF	1.653	SLV 7	0.362	1.483	1618	1.653	Si
	V	1.228	SLV 7	0.297	1.215	851	1.27	Si
	PFFP	2.244	SLV 7	0.362	1.483	1618	1.653	Si
	R	0.279	SLV 13	0.062	0.256	17	0.255	No
133	PF	3.961	SLV 7	0.362	1.483	1618	1.653	Si
	V	0.88	SLV 11	0.212	0.868	326	0.857	No
	PFFP	1000	SLV 1	0.362	1.483	1618	1.653	Si
	R	0.131	SLV 3	0.026	0.107	2	0.106	No
134	PF	2.033	SLV 5	0.362	1.483	1618	1.653	Si
	V	1.253	SLV 9	0.303	1.24	903	1.301	Si
	PFFP	3.022	SLV 1	0.362	1.483	1618	1.653	Si
	R	0.057	SLV 15	0	0	0	0	No
135	PF	2.324	SLV 13	0.362	1.483	1618	1.653	Si
	V	0.983	SLV 3	0.24	0.982	452	0.98	No
	PFFP	2.725	SLV 13	0.362	1.483	1618	1.653	Si
	R	0.059	SLV 1	0	0	0	0	No
136	PF	2.393	SLV 1	0.362	1.483	1618	1.653	Si
	V	0.887	SLV 3	0.214	0.876	334	0.866	No
	PFFP	3.242	SLV 5	0.362	1.483	1618	1.653	Si
	R	0.058	SLV 1	0	0	0	0	No
137	PF	0.806	SLV 13	0.193	0.789	253	0.772	No
	V	0.974	SLV 13	0.237	0.971	439	0.968	No
	PFFP	1000	SLV 1	0.362	1.483	1618	1.653	Si
	R	0.059	SLV 1	0	0	0	0	No
138	PF	0.832	SLV 13	0.199	0.816	277	0.802	No
	V	0.614	SLV 1	0.143	0.587	124	0.577	No
	PFFP	2.679	SLV 5	0.362	1.483	1618	1.653	Si
	R	0.061	SLV 3	0	0	0	0	No
139	PF	3.107	SLV 1	0.362	1.483	1618	1.653	Si
	V	0.964	SLV 15	0.235	0.96	426	0.956	No
	PFFP	3.509	SLV 5	0.362	1.483	1618	1.653	Si
	R	0.059	SLV 1	0	0	0	0	No
140	PF	0.561	SLV 11	0.132	0.539	102	0.532	No
	V	0.478	SLV 15	0.11	0.448	65	0.442	No
	PFFP	0.628	SLV 11	0.148	0.604	133	0.593	No
	R	0.021	SLV 1	0	0	0	0	No
141	PF	0.302	SLV 11	0.07	0.286	22	0.284	No
	V	0.322	SLV 11	0.075	0.308	26	0.304	No
	PFFP	0.586	SLV 7	0.137	0.562	112	0.553	No
	R	0.024	SLV 1	0	0	0	0	No
142	PF	0.116	SLV 11	0.026	0.107	2	0.106	No
	V	0.106	SLV 11	0.02	0.08	1	0.08	No
	PFFP	0.695	SLV 3	0.164	0.671	169	0.655	No
	R	0.021	SLV 1	0	0	0	0	No
143	PF	1.452	SLV 13	0.35	1.433	1444	1.578	Si
	V	0.689	SLV 1	0.162	0.663	165	0.648	No
	PFFP	1.707	SLV 9	0.362	1.483	1618	1.653	Si
	R	0.06	SLV 3	0	0	0	0	No
144	PF	1.632	SLV 9	0.362	1.483	1618	1.653	Si
	V	1.06	SLV 13	0.258	1.057	560	1.07	Si
	PFFP	1.69	SLV 9	0.362	1.483	1618	1.653	Si
	R	0.061	SLV 1	0	0	0	0	No
145	PF	1.5	SLV 5	0.361	1.478	1599	1.645	Si
	V	1.075	SLV 13	0.262	1.072	584	1.088	Si
	PFFP	1.583	SLV 5	0.362	1.483	1618	1.653	Si
	R	0.061	SLV 15	0	0	0	0	No
146	PF	1.371	SLV 9	0.331	1.354	1197	1.461	Si
	V	0.686	SLV 13	0.162	0.661	164	0.647	No
	PFFP	1.564	SLV 5	0.362	1.483	1618	1.653	Si
	R	0.061	SLV 1	0	0	0	0	No
147	PF	1.573	SLV 11	0.362	1.483	1618	1.653	Si
	V	1.111	SLV 11	0.27	1.105	640	1.13	Si
	PFFP	1.805	SLV 11	0.362	1.483	1618	1.653	Si
	R	0.294	SLV 15	0.066	0.269	19	0.267	No
148	PF	1.561	SLV 11	0.362	1.483	1618	1.653	Si
	V	1.133	SLV 11	0.275	1.126	677	1.156	Si
	PFFP	2.049	SLV 7	0.362	1.483	1618	1.653	Si
	R	0.282	SLV 1	0.062	0.256	17	0.255	No
149	PF	0	SLV 1	0	0	0	0	No
	V	0	SLV 1	0	0	0	0	No
	PFFP	1.402	SLV 7	0.338	1.384	1287	1.505	Si
	R	0.064	SLV 1	0	0	0	0	No
150	PF	2.986	SLV 13	0.362	1.483	1618	1.653	Si
	V	0.96	SLV 7	0.233	0.956	421	0.952	No
	PFFP	3.538	SLV 15	0.362	1.483	1618	1.653	Si
	R	0.14	SLV 1	0.031	0.127	3	0.125	No

Maschio	Stato limite	Molt.	Comb.	PGA	iPGA (ζE)	TR	(TR/TRrif)^.41	Verifica
152	PF	1.473	SLV 13	0.355	1.453	1513	1.608	Si
	V	1.131	SLV 5	0.275	1.124	673	1.154	Si
	PFFP	3.066	SLV 13	0.362	1.483	1618	1.653	Si
	R	0.057	SLV 13	0	0	0	0	No
153	PF	0.822	SLV 7	0.197	0.808	269	0.792	No
	V	0.654	SLV 7	0.154	0.631	147	0.618	No
	PFFP	1.041	SLV 3	0.254	1.039	532	1.048	Si
	R	0.021	SLV 1	0	0	0	0	No
154	PF	1.131	SLV 7	0.275	1.124	673	1.154	Si
	V	0.864	SLV 3	0.208	0.851	309	0.838	No
	PFFP	1.276	SLV 11	0.308	1.262	952	1.33	Si
	R	0.072	SLV 1	0	0	0	0	No
155	PF	0.609	SLV 15	0.142	0.58	121	0.571	No
	V	0.614	SLV 15	0.143	0.587	124	0.577	No
	PFFP	1.037	SLV 7	0.253	1.035	526	1.043	Si
	R	0.072	SLV 1	0	0	0	0	No
156	PF	1.013	SLV 3	0.247	1.013	493	1.015	Si
	V	0.642	SLV 3	0.15	0.614	138	0.602	No
	PFFP	1.68	SLV 11	0.362	1.483	1618	1.653	Si
	R	0.061	SLV 3	0	0	0	0	No
157	PF	0.231	SLV 5	0.053	0.218	11	0.214	No
	V	0.206	SLV 15	0.047	0.191	8	0.187	No
	PFFP	1.274	SLV 11	0.308	1.26	948	1.328	Si
	R	0.073	SLV 13	0	0	0	0	No
158	PF	0.187	SLV 11	0.041	0.169	6	0.167	No
	V	0.186	SLV 11	0.041	0.169	6	0.167	No
	PFFP	2.071	SLV 5	0.362	1.483	1618	1.653	Si
	R	0.073	SLV 1	0	0	0	0	No
159	PF	3.752	SLV 3	0.362	1.483	1618	1.653	Si
	V	0.703	SLV 7	0.167	0.683	176	0.666	No
	PFFP	2.14	SLV 3	0.362	1.483	1618	1.653	Si
	R	0.021	SLV 1	0	0	0	0	No
160	PF	0.721	SLV 11	0.172	0.703	188	0.684	No
	V	0.569	SLV 15	0.132	0.542	103	0.534	No
	PFFP	1.116	SLV 7	0.271	1.11	648	1.136	Si
	R	0.061	SLV 1	0	0	0	0	No
161	PF	0.194	SLV 7	0.044	0.181	7	0.177	No
	V	0.184	SLV 7	0.041	0.169	6	0.167	No
	PFFP	0.33	SLV 7	0.077	0.313	27	0.309	No
	R	0.02	SLV 1	0	0	0	0	No
162	PF	1.18	SLV 5	0.286	1.17	760	1.213	Si
	V	0.444	SLV 11	0.104	0.424	56	0.416	No
	PFFP	1.39	SLV 5	0.335	1.372	1251	1.487	Si
	R	0.021	SLV 1	0	0	0	0	No
163	PF	1.278	SLV 9	0.309	1.264	956	1.332	Si
	V	0.709	SLV 9	0.169	0.691	181	0.673	No
	PFFP	1.613	SLV 5	0.362	1.483	1618	1.653	Si
	R	0.061	SLV 1	0	0	0	0	No
164	PF	0.74	SLV 3	0.175	0.718	198	0.699	No
	V	0.643	SLV 3	0.151	0.617	139	0.604	No
	PFFP	1.651	SLV 7	0.362	1.483	1618	1.653	Si
	R	0.059	SLV 13	0	0	0	0	No
165	PF	1.745	SLV 7	0.362	1.483	1618	1.653	Si
	V	0.729	SLV 3	0.173	0.706	190	0.687	No
	PFFP	1.681	SLV 7	0.362	1.483	1618	1.653	Si
	R	0.06	SLV 3	0	0	0	0	No
166	PF	1.074	SLV 3	0.262	1.071	582	1.087	Si
	V	0.947	SLV 3	0.23	0.941	404	0.936	No
	PFFP	1.264	SLV 7	0.305	1.25	926	1.315	Si
	R	0.061	SLV 13	0	0	0	0	No
167	PF	1.418	SLV 5	0.342	1.399	1335	1.528	Si
	V	0.998	SLV 1	0.244	0.997	471	0.997	No
	PFFP	1.639	SLV 5	0.362	1.483	1618	1.653	Si
	R	0.06	SLV 3	0	0	0	0	No
168	PF	1.286	SLV 1	0.311	1.272	976	1.343	Si
	V	1.141	SLV 13	0.277	1.134	692	1.167	Si
	PFFP	1.376	SLV 5	0.332	1.359	1211	1.468	Si
	R	0.06	SLV 15	0	0	0	0	No
169	PF	1.45	SLV 3	0.35	1.431	1438	1.575	Si
	V	1.037	SLV 7	0.253	1.035	526	1.043	Si
	PFFP	1.475	SLV 3	0.356	1.455	1520	1.611	Si
	R	0.062	SLV 13	0	0	0	0	No
170	PF	1.588	SLV 5	0.362	1.483	1618	1.653	Si
	V	1.053	SLV 5	0.257	1.05	549	1.061	Si
	PFFP	1.618	SLV 1	0.362	1.483	1618	1.653	Si
	R	0.061	SLV 13	0	0	0	0	No
171	PF	2.17	SLV 15	0.362	1.483	1618	1.653	Si
	V	1.664	SLV 9	0.362	1.483	1618	1.653	Si
	PFFP	1.928	SLV 13	0.362	1.483	1618	1.653	Si
	R	0.061	SLV 1	0	0	0	0	No
172	PF	1.143	SLV 9	0.277	1.135	694	1.168	Si
	V	1.14	SLV 9	0.277	1.132	689	1.165	Si
	PFFP	1.199	SLV 9	0.29	1.188	795	1.235	Si
	R	0.057	SLV 1	0	0	0	0	No
173	PF	1.182	SLV 9	0.286	1.172	763	1.214	Si
	V	1.125	SLV 9	0.273	1.118	663	1.147	Si
	PFFP	1.107	SLV 9	0.269	1.101	634	1.126	Si
	R	0.058	SLV 1	0	0	0	0	No
174	PF	1.034	SLV 15	0.252	1.033	522	1.039	Si
	V	0.985	SLV 15	0.24	0.984	454	0.982	No
	PFFP	1.328	SLV 11	0.321	1.312	1080	1.4	Si
	R	0.058	SLV 1	0	0	0	0	No

Maschio	Stato limite	Molt.	Comb.	PGA	iPGA (ζE)	TR	(TR/TRrif)^.41	Verifica
175	PF	1.245	SLV 3	0.301	1.233	888	1.292	Si
	V	0.755	SLV 3	0.18	0.735	210	0.716	No
	PFFP	1.315	SLV 11	0.318	1.3	1047	1.383	Si
	R	0.058	SLV 15	0	0	0	0	No
176	PF	0.272	SLV 13	0.061	0.249	16	0.249	No
	V	0.252	SLV 13	0.055	0.226	12	0.221	No
	PFFP	1.065	SLV 11	0.259	1.062	567	1.075	Si
	R	0.064	SLV 3	0	0	0	0	No
177	PF	1.878	SLV 9	0.362	1.483	1618	1.653	Si
	V	1.18	SLV 5	0.286	1.17	760	1.213	Si
	PFFP	1.612	SLV 9	0.362	1.483	1618	1.653	Si
	R	0.06	SLV 1	0	0	0	0	No
178	PF	0.199	SLV 11	0.044	0.181	7	0.177	No
	V	0.197	SLV 11	0.044	0.181	7	0.177	No
	PFFP	0.345	SLV 11	0.08	0.328	31	0.327	No
	R	0.019	SLV 1	0	0	0	0	No
179	PF	0.739	SLV 9	0.177	0.723	201	0.703	No
	V	0.491	SLV 7	0.114	0.468	72	0.461	No
	PFFP	0.802	SLV 13	0.192	0.784	249	0.767	No
	R	0.021	SLV 1	0	0	0	0	No
180	PF	0.402	SLV 13	0.091	0.372	41	0.366	No
	V	0.29	SLV 13	0.066	0.269	19	0.267	No
	PFFP	0.815	SLV 15	0.195	0.799	262	0.784	No
	R	0.056	SLV 1	0	0	0	0	No
181	PF	1.487	SLV 5	0.358	1.466	1555	1.626	Si
	V	0.634	SLV 5	0.149	0.61	136	0.599	No
	PFFP	1.637	SLV 1	0.362	1.483	1618	1.653	Si
	R	0.021	SLV 1	0	0	0	0	No
182	PF	0.116	SLV 9	0.026	0.107	2	0.106	No
	V	0.122	SLV 9	0.026	0.107	2	0.106	No
	PFFP	0.427	SLV 7	0.099	0.407	51	0.401	No
	R	0.071	SLV 1	0	0	0	0	No
183	PF	0.122	SLV 7	0.026	0.107	2	0.106	No
	V	0.123	SLV 7	0.026	0.107	2	0.106	No
	PFFP	0.528	SLV 9	0.124	0.506	87	0.499	No
	R	0.071	SLV 13	0	0	0	0	No
184	PF	0.676	SLV 15	0.159	0.65	157	0.635	No
	V	0.379	SLV 15	0.086	0.351	36	0.347	No
	PFFP	1.077	SLV 3	0.262	1.073	587	1.091	Si
	R	0.059	SLV 1	0	0	0	0	No
185	PF	0.419	SLV 11	0.098	0.399	49	0.394	No
	V	0.435	SLV 11	0.102	0.417	54	0.41	No
	PFFP	0.558	SLV 9	0.131	0.535	100	0.528	No
	R	0.067	SLV 15	0	0	0	0	No
186	PF	0.589	SLV 1	0.137	0.56	111	0.551	No
	V	0.585	SLV 1	0.136	0.558	110	0.549	No
	PFFP	0.772	SLV 3	0.184	0.754	224	0.735	No
	R	0.071	SLV 13	0	0	0	0	No
187	PF	1.065	SLV 11	0.259	1.062	567	1.075	Si
	V	0.745	SLV 11	0.178	0.73	206	0.71	No
	PFFP	0.944	SLV 11	0.229	0.937	400	0.932	No
	R	0.021	SLV 1	0	0	0	0	No
188	PF	2.416	SLV 7	0.362	1.483	1618	1.653	Si
	V	1.366	SLV 7	0.33	1.349	1183	1.454	Si
	PFFP	3.099	SLV 7	0.362	1.483	1618	1.653	Si
	R	0.271	SLV 1	0.061	0.249	16	0.249	No
189	PF	1.862	SLV 3	0.362	1.483	1618	1.653	Si
	V	1.324	SLV 3	0.32	1.309	1072	1.396	Si
	PFFP	2.839	SLV 3	0.362	1.483	1618	1.653	Si
	R	0.253	SLV 13	0.057	0.234	13	0.229	No
191	PF	3.37	SLV 15	0.362	1.483	1618	1.653	Si
	V	1.053	SLV 11	0.257	1.05	549	1.061	Si
	PFFP	2.886	SLV 15	0.362	1.483	1618	1.653	Si
	R	0.119	SLV 13	0.026	0.107	2	0.106	No
192	PF	1.207	SLV 15	0.292	1.196	811	1.245	Si
	V	1.161	SLV 15	0.282	1.153	726	1.19	Si
	PFFP	1.598	SLV 13	0.362	1.483	1618	1.653	Si
	R	0.053	SLV 1	0	0	0	0	No
193	PF	2.084	SLV 13	0.362	1.483	1618	1.653	Si
	V	1.041	SLV 3	0.254	1.039	532	1.048	Si
	PFFP	1.961	SLV 13	0.362	1.483	1618	1.653	Si
	R	0.055	SLV 1	0	0	0	0	No
194	PF	2.39	SLV 9	0.362	1.483	1618	1.653	Si
	V	0.809	SLV 13	0.194	0.793	257	0.777	No
	PFFP	1000	SLV 1	0.362	1.483	1618	1.653	Si
	R	0.053	SLV 3	0	0	0	0	No
195	PF	0.616	SLV 13	0.144	0.589	125	0.578	No
	V	0.379	SLV 13	0.086	0.351	36	0.347	No
	PFFP	3.322	SLV 5	0.362	1.483	1618	1.653	Si
	R	0.053	SLV 13	0	0	0	0	No
196	PF	3.664	SLV 3	0.362	1.483	1618	1.653	Si
	V	0.897	SLV 15	0.217	0.887	345	0.877	No
	PFFP	3.712	SLV 5	0.362	1.483	1618	1.653	Si
	R	0.053	SLV 1	0	0	0	0	No
197	PF	1.835	SLV 1	0.362	1.483	1618	1.653	Si
	V	1.066	SLV 15	0.26	1.063	570	1.078	Si
	PFFP	1.741	SLV 1	0.362	1.483	1618	1.653	Si
	R	0.056	SLV 3	0	0	0	0	No
198	PF	0.749	SLV 11	0.179	0.733	208	0.713	No
	V	0.652	SLV 7	0.154	0.629	145	0.615	No
	PFFP	0.646	SLV 11	0.152	0.623	142	0.61	No
	R	0.02	SLV 1	0	0	0	0	No

Maschio	Stato limite	Molt.	Comb.	PGA	iPGA (ζE)	TR	(TR/TRrif)^.41	Verifica
199	PF	0.096	SLV 15	0.02	0.08	1	0.08	No
	V	0.004	SLV 15	0	0	0	0	No
	PFFP	0.648	SLV 3	0.152	0.621	141	0.608	No
	R	0.02	SLV 1	0	0	0	0	No
200	PF	1.469	SLV 15	0.354	1.449	1499	1.602	Si
	V	1.025	SLV 1	0.25	1.024	510	1.03	Si
	PFFP	1.875	SLV 11	0.362	1.483	1618	1.653	Si
	R	0.058	SLV 1	0	0	0	0	No
201	PF	1.916	SLV 9	0.362	1.483	1618	1.653	Si
	V	1.448	SLV 13	0.349	1.429	1432	1.572	Si
	PFFP	1.7	SLV 5	0.362	1.483	1618	1.653	Si
	R	0.058	SLV 1	0	0	0	0	No
202	PF	1.756	SLV 5	0.362	1.483	1618	1.653	Si
	V	1.452	SLV 13	0.35	1.433	1444	1.578	Si
	PFFP	1.586	SLV 9	0.362	1.483	1618	1.653	Si
	R	0.059	SLV 1	0	0	0	0	No
203	PF	1.578	SLV 1	0.362	1.483	1618	1.653	Si
	V	1.025	SLV 13	0.25	1.024	510	1.03	Si
	PFFP	2.183	SLV 5	0.362	1.483	1618	1.653	Si
	R	0.057	SLV 13	0	0	0	0	No
204	PF	1.626	SLV 11	0.362	1.483	1618	1.653	Si
	V	1.143	SLV 11	0.277	1.135	694	1.168	Si
	PFFP	2.166	SLV 11	0.362	1.483	1618	1.653	Si
	R	0.266	SLV 3	0.059	0.242	14	0.236	No
205	PF	1.982	SLV 11	0.362	1.483	1618	1.653	Si
	V	1.254	SLV 15	0.303	1.241	906	1.303	Si
	PFFP	2.842	SLV 11	0.362	1.483	1618	1.653	Si
	R	0.253	SLV 1	0.057	0.234	13	0.229	No
206	PF	0	SLV 1	0	0	0	0	No
	V	0	SLV 1	0	0	0	0	No
	PFFP	1.705	SLV 1	0.362	1.483	1618	1.653	Si
	R	0.204	SLV 5	0.047	0.191	8	0.187	No
207	PF	0	SLV 1	0	0	0	0	No
	V	0	SLV 1	0	0	0	0	No
	PFFP	2.292	SLV 7	0.362	1.483	1618	1.653	Si
	R	0.203	SLV 3	0.044	0.181	7	0.177	No
208	PF	3.988	SLV 11	0.362	1.483	1618	1.653	Si
	V	1.036	SLV 7	0.253	1.034	525	1.042	Si
	PFFP	3.89	SLV 11	0.362	1.483	1618	1.653	Si
	R	0.131	SLV 1	0.026	0.107	2	0.106	No
210	PF	2.179	SLV 3	0.362	1.483	1618	1.653	Si
	V	1.236	SLV 5	0.299	1.223	867	1.28	Si
	PFFP	2.202	SLV 3	0.362	1.483	1618	1.653	Si
	R	0.052	SLV 13	0	0	0	0	No
211	PF	0.963	SLV 3	0.234	0.959	425	0.955	No
	V	0.723	SLV 7	0.172	0.705	189	0.685	No
	PFFP	0.859	SLV 7	0.207	0.845	304	0.833	No
	R	0.021	SLV 1	0	0	0	0	No
212	PF	0.646	SLV 15	0.151	0.619	140	0.606	No
	V	0.645	SLV 15	0.151	0.619	140	0.606	No
	PFFP	0.645	SLV 15	0.151	0.619	140	0.606	No
	R	0.07	SLV 1	0	0	0	0	No
213	PF	0.451	SLV 5	0.105	0.43	58	0.422	No
	V	0.435	SLV 5	0.102	0.417	54	0.41	No
	PFFP	0.621	SLV 5	0.146	0.598	129	0.586	No
	R	0.068	SLV 3	0	0	0	0	No
214	PF	0.783	SLV 3	0.187	0.765	233	0.747	No
	V	0.515	SLV 3	0.118	0.485	79	0.479	No
	PFFP	1.264	SLV 15	0.306	1.251	928	1.316	Si
	R	0.053	SLV 13	0	0	0	0	No
215	PF	0.058	SLV 7	0	0	0	0	No
	V	0.056	SLV 7	0	0	0	0	No
	PFFP	1.331	SLV 15	0.322	1.316	1091	1.406	Si
	R	0.072	SLV 13	0	0	0	0	No
216	PF	0.362	SLV 11	0.085	0.346	35	0.343	No
	V	0.257	SLV 1	0.057	0.234	13	0.229	No
	PFFP	1.199	SLV 5	0.29	1.188	795	1.235	Si
	R	0.076	SLV 1	0	0	0	0	No
217	PF	1.535	SLV 7	0.362	1.483	1618	1.653	Si
	V	0.693	SLV 7	0.164	0.673	170	0.656	No
	PFFP	1.395	SLV 3	0.337	1.378	1269	1.496	Si
	R	0.02	SLV 1	0	0	0	0	No
218	PF	0.608	SLV 3	0.142	0.58	121	0.571	No
	V	0.458	SLV 1	0.105	0.43	58	0.422	No
	PFFP	1.006	SLV 3	0.246	1.006	483	1.007	Si
	R	0.056	SLV 1	0	0	0	0	No
219	PF	0.099	SLV 11	0.02	0.08	1	0.08	No
	V	0.092	SLV 11	0.02	0.08	1	0.08	No
	PFFP	0.217	SLV 11	0.049	0.201	9	0.197	No
	R	0.019	SLV 1	0	0	0	0	No
220	PF	0.854	SLV 5	0.205	0.841	300	0.828	No
	V	0.5	SLV 11	0.116	0.477	75	0.469	No
	PFFP	0.928	SLV 5	0.225	0.921	381	0.914	No
	R	0.021	SLV 1	0	0	0	0	No
221	PF	1.033	SLV 5	0.252	1.032	521	1.039	Si
	V	0.851	SLV 9	0.205	0.837	296	0.824	No
	PFFP	1.791	SLV 5	0.362	1.483	1618	1.653	Si
	R	0.059	SLV 15	0	0	0	0	No
222	PF	0.483	SLV 1	0.111	0.454	67	0.448	No
	V	0.446	SLV 1	0.102	0.417	54	0.41	No
	PFFP	1.431	SLV 3	0.345	1.413	1378	1.548	Si
	R	0.058	SLV 15	0	0	0	0	No

Maschio	Stato limite	Molt.	Comb.	PGA	iPGA (ζE)	TR	(TR/TRrif)^.41	Verifica
223	PF	1.731	SLV 15	0.362	1.483	1618	1.653	Si
	V	0.899	SLV 3	0.217	0.889	347	0.879	No
	PFFP	1.742	SLV 7	0.362	1.483	1618	1.653	Si
	R	0.058	SLV 1	0	0	0	0	No
224	PF	1.115	SLV 3	0.271	1.11	648	1.136	Si
	V	1.029	SLV 3	0.251	1.028	515	1.034	Si
	PFFP	1.272	SLV 7	0.307	1.258	943	1.325	Si
	R	0.059	SLV 13	0	0	0	0	No
225	PF	1.317	SLV 5	0.318	1.301	1051	1.385	Si
	V	1.199	SLV 5	0.29	1.188	795	1.235	Si
	PFFP	1.298	SLV 5	0.313	1.283	1003	1.359	Si
	R	0.057	SLV 1	0	0	0	0	No
226	PF	1.251	SLV 5	0.302	1.238	898	1.298	Si
	V	1.245	SLV 5	0.301	1.232	886	1.291	Si
	PFFP	1.333	SLV 5	0.322	1.317	1093	1.407	Si
	R	0.057	SLV 1	0	0	0	0	No
227	PF	2.221	SLV 3	0.362	1.483	1618	1.653	Si
	V	1.711	SLV 5	0.362	1.483	1618	1.653	Si
	PFFP	1.823	SLV 1	0.362	1.483	1618	1.653	Si
	R	0.061	SLV 1	0	0	0	0	No
228	PF	1.89	SLV 11	0.362	1.483	1618	1.653	Si
	V	1.363	SLV 7	0.329	1.346	1175	1.45	Si
	PFFP	1.103	SLV 15	0.268	1.098	628	1.121	Si
	R	0.092	SLV 1	0.02	0.08	1	0.08	No
229	PF	1.821	SLV 9	0.362	1.483	1618	1.653	Si
	V	1.293	SLV 9	0.312	1.278	991	1.352	Si
	PFFP	1.389	SLV 13	0.335	1.372	1252	1.488	Si
	R	0.091	SLV 1	0.02	0.08	1	0.08	No
230	PF	0.501	SLV 5	0.117	0.479	77	0.474	No
	V	0.368	SLV 5	0.086	0.351	36	0.347	No
	PFFP	1.097	SLV 1	0.267	1.092	618	1.114	Si
	R	0.076	SLV 15	0	0	0	0	No
231	PF	0.39	SLV 9	0.091	0.372	41	0.366	No
	V	0.389	SLV 9	0.091	0.372	41	0.366	No
	PFFP	0.481	SLV 9	0.112	0.46	69	0.453	No
	R	0.098	SLV 3	0.02	0.08	1	0.08	No
232	PF	0.797	SLV 3	0.19	0.779	245	0.762	No
	V	0.572	SLV 3	0.133	0.544	104	0.536	No
	PFFP	1.235	SLV 7	0.299	1.222	865	1.279	Si
	R	0.074	SLV 13	0	0	0	0	No
233	PF	0.793	SLV 11	0.19	0.779	245	0.762	No
	V	0.716	SLV 11	0.17	0.698	185	0.679	No
	PFFP	0.668	SLV 11	0.158	0.646	155	0.632	No
	R	0.089	SLV 1	0.02	0.08	1	0.08	No
234	PF	0.36	SLV 1	0.081	0.332	31	0.327	No
	V	0.341	SLV 1	0.077	0.313	27	0.309	No
	PFFP	0.521	SLV 1	0.12	0.49	81	0.484	No
	R	0.041	SLV 3	0	0	0	0	No
235	PF	0.01	SLV 9	0	0	0	0	No
	V	0	SLV 5	0	0	0	0	No
	PFFP	0.916	SLV 9	0.222	0.907	367	0.9	No
	R	0.078	SLV 9	0	0	0	0	No
236	PF	0.018	SLV 11	0	0	0	0	No
	V	0.017	SLV 11	0	0	0	0	No
	PFFP	0.427	SLV 11	0.099	0.407	51	0.401	No
	R	0.024	SLV 1	0	0	0	0	No
237	PF	0.53	SLV 9	0.124	0.508	88	0.501	No
	V	0.375	SLV 9	0.087	0.355	37	0.351	No
	PFFP	0.73	SLV 9	0.174	0.713	194	0.693	No
	R	0.025	SLV 1	0	0	0	0	No
238	PF	0.14	SLV 13	0.031	0.127	3	0.125	No
	V	0.144	SLV 15	0.031	0.127	3	0.125	No
	PFFP	0.344	SLV 13	0.078	0.318	28	0.313	No
	R	0.091	SLV 13	0.02	0.08	1	0.08	No
239	PF	0.315	SLV 5	0.073	0.298	24	0.294	No
	V	0.259	SLV 5	0.059	0.242	14	0.236	No
	PFFP	0.453	SLV 5	0.106	0.433	59	0.425	No
	R	0	SLV 1	0	0	0	0	No
240	PF	0.014	SLV 7	0	0	0	0	No
	V	0.013	SLV 7	0	0	0	0	No
	PFFP	0.449	SLV 5	0.104	0.427	57	0.419	No
	R	0.024	SLV 5	0	0	0	0	No
241	PF	0.293	SLV 13	0.066	0.269	19	0.267	No
	V	0.17	SLV 13	0.038	0.157	5	0.155	No
	PFFP	0.634	SLV 3	0.148	0.606	134	0.595	No
	R	0.093	SLV 15	0.02	0.08	1	0.08	No
242	PF	0	SLV 1	0	0	0	0	No
	V	0	SLV 1	0	0	0	0	No
	PFFP	0.392	SLV 7	0.092	0.376	42	0.37	No
	R	0	SLV 1	0	0	0	0	No
243	PF	0.524	SLV 11	0.122	0.501	85	0.494	No
	V	0.484	SLV 11	0.113	0.463	70	0.456	No
	PFFP	0.913	SLV 15	0.221	0.905	364	0.897	No
	R	0.105	SLV 1	0.02	0.08	1	0.08	No
244	PF	1.095	SLV 9	0.266	1.09	614	1.111	Si
	V	1.08	SLV 9	0.263	1.076	591	1.094	Si
	PFFP	1.04	SLV 9	0.254	1.038	530	1.046	Si
	R	0.094	SLV 1	0.02	0.08	1	0.08	No
245	PF	1.097	SLV 13	0.267	1.092	618	1.114	Si
	V	0.678	SLV 13	0.159	0.652	158	0.637	No
	PFFP	2.025	SLV 11	0.362	1.483	1618	1.653	Si
	R	0.078	SLV 1	0	0	0	0	No

Maschio	Stato limite	Molt.	Comb.	PGA	iPGA (ζE)	TR	(TR/TRrif)^.41	Verifica
246	PF	0.343	SLV 13	0.077	0.313	27	0.309	No
	V	0.337	SLV 13	0.075	0.308	26	0.304	No
	PFFP	0.795	SLV 15	0.19	0.778	244	0.761	No
	R	0.068	SLV 1	0	0	0	0	No
247	PF	0	SLV 1	0	0	0	0	No
	V	0	SLV 1	0	0	0	0	No
	PFFP	2.001	SLV 11	0.362	1.483	1618	1.653	Si
	R	0.089	SLV 1	0.02	0.08	1	0.08	No
248	PF	1.722	SLV 3	0.362	1.483	1618	1.653	Si
	V	1.252	SLV 1	0.303	1.239	902	1.301	Si
	PFFP	1.479	SLV 1	0.356	1.459	1533	1.617	Si
	R	0.082	SLV 13	0	0	0	0	No
249	PF	0.758	SLV 11	0.181	0.743	216	0.724	No
	V	0.72	SLV 15	0.17	0.698	185	0.679	No
	PFFP	0.521	SLV 11	0.122	0.498	84	0.491	No
	R	0.026	SLV 1	0	0	0	0	No
250	PF	0.106	SLV 11	0.02	0.08	1	0.08	No
	V	0.121	SLV 11	0.026	0.107	2	0.106	No
	PFFP	0.518	SLV 3	0.119	0.487	80	0.482	No
	R	0.027	SLV 1	0	0	0	0	No
251	PF	0	SLV 1	0	0	0	0	No
	V	0	SLV 1	0	0	0	0	No
	PFFP	0.423	SLV 1	0.097	0.395	47	0.387	No
	R	0	SLV 1	0	0	0	0	No
252	PF	0.625	SLV 7	0.147	0.602	132	0.592	No
	V	0.519	SLV 7	0.121	0.495	83	0.489	No
	PFFP	0.653	SLV 7	0.154	0.631	147	0.618	No
	R	0	SLV 1	0	0	0	0	No
253	PF	1.942	SLV 5	0.362	1.483	1618	1.653	Si
	V	1.541	SLV 1	0.362	1.483	1618	1.653	Si
	PFFP	1.192	SLV 9	0.289	1.182	782	1.227	Si
	R	0.043	SLV 3	0	0	0	0	No
254	PF	1.634	SLV 5	0.362	1.483	1618	1.653	Si
	V	1.367	SLV 1	0.33	1.351	1189	1.457	Si
	PFFP	1.143	SLV 5	0.277	1.135	694	1.168	Si
	R	0.056	SLV 13	0	0	0	0	No
255	PF	0	SLV 1	0	0	0	0	No
	V	0	SLV 1	0	0	0	0	No
	PFFP	1.218	SLV 11	0.295	1.206	831	1.258	Si
	R	0.082	SLV 15	0	0	0	0	No
256	PF	0.588	SLV 3	0.137	0.56	111	0.551	No
	V	0.58	SLV 3	0.135	0.551	107	0.543	No
	PFFP	1.095	SLV 3	0.266	1.09	615	1.112	Si
	R	0.104	SLV 13	0.02	0.08	1	0.08	No
257	PF	0	SLV 1	0	0	0	0	No
	V	0	SLV 1	0	0	0	0	No
	PFFP	0.385	SLV 11	0.09	0.368	40	0.363	No
	R	0	SLV 1	0	0	0	0	No
258	PF	0.505	SLV 15	0.116	0.474	74	0.467	No
	V	0.363	SLV 3	0.081	0.332	31	0.327	No
	PFFP	0.637	SLV 15	0.149	0.61	136	0.599	No
	R	0.094	SLV 3	0.02	0.08	1	0.08	No
259	PF	0	SLV 3	0	0	0	0	No
	V	0	SLV 1	0	0	0	0	No
	PFFP	0.504	SLV 11	0.118	0.482	78	0.477	No
	R	0.024	SLV 11	0	0	0	0	No
260	PF	0.241	SLV 3	0.053	0.218	11	0.214	No
	V	0.242	SLV 3	0.053	0.218	11	0.214	No
	PFFP	0.544	SLV 3	0.126	0.516	91	0.508	No
	R	0.088	SLV 3	0.02	0.08	1	0.08	No
261	PF	0	SLV 1	0	0	0	0	No
	V	0	SLV 1	0	0	0	0	No
	PFFP	0.123	SLV 11	0.026	0.107	2	0.106	No
	R	0.025	SLV 1	0	0	0	0	No
262	PF	0.643	SLV 5	0.152	0.621	141	0.608	No
	V	0.372	SLV 5	0.087	0.355	37	0.351	No
	PFFP	0.926	SLV 11	0.224	0.918	378	0.911	No
	R	0.025	SLV 1	0	0	0	0	No
263	PF	0	SLV 1	0	0	0	0	No
	V	0	SLV 1	0	0	0	0	No
	PFFP	0.578	SLV 5	0.136	0.555	109	0.547	No
	R	0.023	SLV 15	0	0	0	0	No
264	PF	0.484	SLV 1	0.111	0.454	67	0.448	No
	V	0.46	SLV 1	0.105	0.43	58	0.422	No
	PFFP	0.632	SLV 9	0.149	0.61	136	0.599	No
	R	0.072	SLV 3	0	0	0	0	No
265	PF	1.039	SLV 7	0.253	1.037	529	1.045	Si
	V	0.897	SLV 7	0.216	0.886	344	0.876	No
	PFFP	0.799	SLV 7	0.192	0.784	249	0.767	No
	R	0.09	SLV 13	0.02	0.08	1	0.08	No
266	PF	1.11	SLV 11	0.27	1.104	639	1.129	Si
	V	0.986	SLV 11	0.24	0.984	455	0.983	No
	PFFP	1.125	SLV 11	0.273	1.118	663	1.147	Si
	R	0.08	SLV 1	0	0	0	0	No
267	PF	0.877	SLV 5	0.211	0.865	323	0.854	No
	V	0.856	SLV 5	0.206	0.843	302	0.831	No
	PFFP	0.74	SLV 5	0.177	0.723	201	0.703	No
	R	0.083	SLV 15	0	0	0	0	No
268	PF	0.539	SLV 9	0.126	0.516	91	0.508	No
	V	0.408	SLV 9	0.095	0.388	45	0.381	No
	PFFP	1.073	SLV 13	0.261	1.07	581	1.086	Si
	R	0.079	SLV 3	0	0	0	0	No

Maschio	Stato limite	Molt.	Comb.	PGA	iPGA (ζE)	TR	(TR/TRrif)^.41	Verifica
269	PF	2.358	SLV 7	0.362	1.483	1618	1.653	Si
	V	1.705	SLV 11	0.362	1.483	1618	1.653	Si
	PFFP	1.177	SLV 3	0.285	1.168	755	1.209	Si
	R	0.075	SLV 13	0	0	0	0	No
270	PF	1.536	SLV 1	0.362	1.483	1618	1.653	Si
	V	1.406	SLV 5	0.339	1.387	1298	1.51	Si
	PFFP	1.22	SLV 3	0.295	1.208	836	1.261	Si
	R	0.08	SLV 13	0	0	0	0	No
271	PF	0.035	SLV 11	0	0	0	0	No
	V	0.035	SLV 11	0	0	0	0	No
	PFFP	0.141	SLV 5	0.031	0.127	3	0.125	No
	R	0.064	SLV 5	0	0	0	0	No
272	PF	0.059	SLV 5	0	0	0	0	No
	V	0.058	SLV 5	0	0	0	0	No
	PFFP	0.079	SLV 11	0	0	0	0	No
	R	0.065	SLV 1	0	0	0	0	No
273	PF	0.183	SLV 9	0.041	0.169	6	0.167	No
	V	0.181	SLV 9	0.041	0.169	6	0.167	No
	PFFP	2.416	SLV 11	0.362	1.483	1618	1.653	Si
	R	0.191	SLV 3	0.041	0.169	6	0.167	No
274	PF	0.331	SLV 3	0.074	0.303	25	0.299	No
	V	0.326	SLV 3	0.073	0.298	24	0.294	No
	PFFP	0.526	SLV 1	0.122	0.498	84	0.491	No
	R	0.183	SLV 15	0.041	0.169	6	0.167	No
275	PF	1.252	SLV 7	0.303	1.239	901	1.3	Si
	V	0.523	SLV 13	0.12	0.493	82	0.487	No
	PFFP	1.128	SLV 3	0.274	1.122	669	1.151	Si
	R	0.128	SLV 1	0.026	0.107	2	0.106	No
276	PF	1.312	SLV 11	0.317	1.297	1039	1.378	Si
	V	0.858	SLV 1	0.206	0.844	303	0.832	No
	PFFP	1.259	SLV 15	0.304	1.246	917	1.31	Si
	R	0.128	SLV 13	0.026	0.107	2	0.106	No
277	PF	0.347	SLV 15	0.078	0.318	28	0.313	No
	V	0.347	SLV 15	0.078	0.318	28	0.313	No
	PFFP	0.552	SLV 13	0.128	0.523	95	0.517	No
	R	0.202	SLV 1	0.044	0.181	7	0.177	No
278	PF	0.114	SLV 7	0.026	0.107	2	0.106	No
	V	0.114	SLV 7	0.026	0.107	2	0.106	No
	PFFP	2.751	SLV 9	0.362	1.483	1618	1.653	Si
	R	0.163	SLV 13	0.035	0.143	4	0.141	No
281	PF	0.485	SLV 15	0.111	0.454	67	0.448	No
	V	0.404	SLV 15	0.092	0.376	42	0.37	No
	PFFP	1.125	SLV 11	0.273	1.118	663	1.147	Si
	R	0.177	SLV 1	0.038	0.157	5	0.155	No
282	PF	0.588	SLV 3	0.137	0.56	111	0.551	No
	V	0.277	SLV 13	0.062	0.256	17	0.255	No
	PFFP	1.257	SLV 7	0.304	1.243	911	1.306	Si
	R	0.176	SLV 13	0.038	0.157	5	0.155	No
283	PF	0.494	SLV 15	0.114	0.466	71	0.459	No
	V	0.387	SLV 15	0.088	0.359	38	0.355	No
	PFFP	1.29	SLV 7	0.312	1.275	984	1.348	Si
	R	0.088	SLV 1	0.02	0.08	1	0.08	No
284	PF	0.615	SLV 3	0.143	0.587	124	0.577	No
	V	0.418	SLV 15	0.095	0.388	45	0.381	No
	PFFP	1.232	SLV 7	0.298	1.219	859	1.275	Si
	R	0.088	SLV 13	0.02	0.08	1	0.08	No
285	PF	0.583	SLV 15	0.136	0.555	109	0.547	No
	V	0.474	SLV 15	0.109	0.445	64	0.44	No
	PFFP	1.317	SLV 7	0.318	1.301	1051	1.385	Si
	R	0.077	SLV 1	0	0	0	0	No
286	PF	0.693	SLV 15	0.163	0.669	168	0.653	No
	V	0.474	SLV 15	0.109	0.445	64	0.44	No
	PFFP	1.369	SLV 11	0.33	1.352	1192	1.458	Si
	R	0.075	SLV 13	0	0	0	0	No
287	PF	1.012	SLV 11	0.247	1.011	491	1.014	Si
	V	1.012	SLV 11	0.247	1.011	491	1.014	Si
	PFFP	1.147	SLV 11	0.278	1.139	701	1.173	Si
	R	0.45	SLV 9	0.105	0.43	58	0.422	No
288	PF	0.539	SLV 13	0.125	0.511	89	0.503	No
	V	0.462	SLV 13	0.106	0.433	59	0.425	No
	PFFP	0.995	SLV 7	0.243	0.994	467	0.993	No
	R	0.047	SLV 15	0	0	0	0	No
289	PF	0.688	SLV 7	0.163	0.667	167	0.651	No
	V	0.669	SLV 7	0.158	0.648	156	0.633	No
	PFFP	0.793	SLV 7	0.19	0.779	245	0.762	No
	R	0.047	SLV 13	0	0	0	0	No
290	PF	0.015	SLV 7	0	0	0	0	No
	V	0.015	SLV 7	0	0	0	0	No
	PFFP	0.296	SLV 11	0.069	0.281	21	0.278	No
	R	0.032	SLV 1	0	0	0	0	No

Verifica travi di collegamento in muratura

Trave	Stato limite	Molt.	Comb.	PGA	iPGA (ζE)	TR	(TR/TRrif)^.41	Verifica
1	F	2.905	SLV 13	0.362	1.483	1618	1.653	Si
	V	0	SLV 1	0	0	0	0	No
2	F	0.088	SLV 7	0.02	0.08	1	0.08	No
	V	0	SLV 1	0	0	0	0	No
3	F	0.439	SLV 11	0.103	0.42	55	0.413	No
	V	0	SLV 1	0	0	0	0	No
4	F	1.959	SLV 5	0.362	1.483	1618	1.653	Si
	V	0	SLV 1	0	0	0	0	No

Trave	Stato limite	Molt.	Comb.	PGA	iPGA (ζE)	TR	(TR/TRrif)^.41	Verifica
5	F	0.092	SLV 1	0.02	0.08	1	0.08	No
	V	0	SLV 1	0	0	0	0	No
6	F	1.651	SLV 13	0.362	1.483	1618	1.653	Si
	V	0	SLV 1	0	0	0	0	No
7	F	0	SLV 1	0	0	0	0	No
	V	0	SLV 1	0	0	0	0	No
8	F	0.965	SLV 1	0.235	0.962	428	0.958	No
	V	0	SLV 1	0	0	0	0	No
9	F	2.013	SLV 3	0.362	1.483	1618	1.653	Si
	V	0	SLV 1	0	0	0	0	No
10	F	0	SLV 3	0	0	0	0	No
	V	0	SLV 1	0	0	0	0	No
11	F	2.567	SLV 13	0.362	1.483	1618	1.653	Si
	V	0	SLV 1	0	0	0	0	No
12	F	0.144	SLV 7	0.031	0.127	3	0.125	No
	V	0	SLV 1	0	0	0	0	No
13	F	1.86	SLV 13	0.362	1.483	1618	1.653	Si
	V	0	SLV 1	0	0	0	0	No
14	F	0.022	SLV 15	0	0	0	0	No
	V	0	SLV 1	0	0	0	0	No
15	F	0.314	SLV 13	0.07	0.286	22	0.284	No
	V	0	SLV 1	0	0	0	0	No
16	F	0.882	SLV 13	0.213	0.871	329	0.86	No
	V	0	SLV 1	0	0	0	0	No
17	F	0.375	SLV 15	0.085	0.346	35	0.343	No
	V	0	SLV 1	0	0	0	0	No
18	F	1000	SLV 1	0.362	1.483	1618	1.653	Si
	V	0.467	SLV 3	0.107	0.436	61	0.431	No
19	F	0.59	SLV 3	0.137	0.562	112	0.553	No
	V	0	SLV 1	0	0	0	0	No
20	F	0.373	SLV 3	0.085	0.346	35	0.343	No
	V	0	SLV 1	0	0	0	0	No
21	F	0.684	SLV 15	0.161	0.66	162	0.643	No
	V	0	SLV 1	0	0	0	0	No
22	F	0.504	SLV 7	0.118	0.482	78	0.477	No
	V	0	SLV 5	0	0	0	0	No
23	F	0.372	SLV 13	0.083	0.342	34	0.339	No
	V	0	SLV 1	0	0	0	0	No
24	F	0.138	SLV 11	0.031	0.127	3	0.125	No
	V	0	SLV 1	0	0	0	0	No
25	F	1.527	SLV 1	0.362	1.483	1618	1.653	Si
	V	0	SLV 1	0	0	0	0	No
26	F	0	SLV 1	0	0	0	0	No
	V	0	SLV 1	0	0	0	0	No
27	F	2.398	SLV 13	0.362	1.483	1618	1.653	Si
	V	0	SLV 1	0	0	0	0	No
28	F	0.118	SLV 13	0.026	0.107	2	0.106	No
	V	0	SLV 1	0	0	0	0	No
29	F	2.597	SLV 1	0.362	1.483	1618	1.653	Si
	V	0	SLV 1	0	0	0	0	No
30	F	0.079	SLV 15	0	0	0	0	No
	V	0	SLV 1	0	0	0	0	No
31	F	0.705	SLV 3	0.167	0.682	175	0.664	No
	V	0	SLV 1	0	0	0	0	No
32	F	0.695	SLV 3	0.164	0.671	169	0.655	No
	V	0	SLV 1	0	0	0	0	No
33	F	0.382	SLV 1	0.087	0.355	37	0.351	No
	V	0	SLV 1	0	0	0	0	No
34	F	0.567	SLV 1	0.132	0.539	102	0.532	No
	V	0	SLV 1	0	0	0	0	No
35	F	1.207	SLV 7	0.292	1.195	810	1.245	Si
	V	0	SLV 1	0	0	0	0	No
36	F	1.284	SLV 13	0.31	1.27	971	1.341	Si
	V	0	SLV 1	0	0	0	0	No
37	F	0.251	SLV 13	0.055	0.226	12	0.221	No
	V	0.012	SLV 13	0	0	0	0	No
38	F	0.968	SLV 3	0.236	0.964	431	0.961	No
	V	0	SLV 1	0	0	0	0	No
39	F	0.16	SLV 9	0.035	0.143	4	0.141	No
	V	0	SLV 1	0	0	0	0	No
40	F	0.644	SLV 9	0.152	0.621	141	0.608	No
	V	0	SLV 1	0	0	0	0	No
41	F	0.742	SLV 13	0.176	0.722	200	0.701	No
	V	0.027	SLV 3	0	0	0	0	No
42	F	0.458	SLV 15	0.105	0.43	58	0.422	No
	V	0	SLV 1	0	0	0	0	No
43	F	0.674	SLV 13	0.158	0.648	156	0.633	No
	V	0	SLV 1	0	0	0	0	No
44	F	0.619	SLV 15	0.144	0.591	126	0.58	No
	V	0.113	SLV 1	0.02	0.08	1	0.08	No
45	F	0.334	SLV 13	0.075	0.308	26	0.304	No
	V	0	SLV 1	0	0	0	0	No
46	F	1.564	SLV 15	0.362	1.483	1618	1.653	Si
	V	0	SLV 1	0	0	0	0	No
47	F	0.061	SLV 15	0	0	0	0	No
	V	0	SLV 1	0	0	0	0	No
48	F	0.33	SLV 11	0.077	0.313	27	0.309	No
	V	0	SLV 1	0	0	0	0	No
49	F	0.778	SLV 3	0.186	0.759	229	0.741	No
	V	0	SLV 1	0	0	0	0	No
50	F	0.364	SLV 7	0.085	0.346	35	0.343	No
	V	0	SLV 1	0	0	0	0	No

Trave	Stato limite	Molt.	Comb.	PGA	iPGA (ζE)	TR	(TR/TRrif)^.41	Verifica
51	F	0.78	SLV 3	0.186	0.762	231	0.744	No
	V	0	SLV 1	0	0	0	0	No
52	F	0.34	SLV 7	0.079	0.323	30	0.322	No
	V	0	SLV 1	0	0	0	0	No
53	F	0.867	SLV 15	0.209	0.855	313	0.843	No
	V	0	SLV 1	0	0	0	0	No
54	F	0.523	SLV 1	0.12	0.493	82	0.487	No
	V	0	SLV 1	0	0	0	0	No
55	F	0.78	SLV 13	0.186	0.762	231	0.744	No
	V	0	SLV 1	0	0	0	0	No
56	F	0.388	SLV 11	0.091	0.372	41	0.366	No
	V	0	SLV 1	0	0	0	0	No
57	F	0.326	SLV 7	0.075	0.308	26	0.304	No
	V	0	SLV 1	0	0	0	0	No
58	F	0.303	SLV 13	0.067	0.275	20	0.273	No
	V	0	SLV 1	0	0	0	0	No
59	F	0.87	SLV 13	0.209	0.857	316	0.846	No
	V	0	SLV 1	0	0	0	0	No
60	F	1.441	SLV 11	0.347	1.421	1405	1.56	Si
	V	0	SLV 1	0	0	0	0	No
61	F	1.048	SLV 3	0.255	1.046	542	1.056	Si
	V	0	SLV 1	0	0	0	0	No
62	F	0.579	SLV 15	0.135	0.551	107	0.543	No
	V	0	SLV 1	0	0	0	0	No
63	F	0.918	SLV 13	0.222	0.91	369	0.902	No
	V	0	SLV 1	0	0	0	0	No
64	F	0.807	SLV 13	0.193	0.791	254	0.774	No
	V	0	SLV 1	0	0	0	0	No
65	F	0.758	SLV 15	0.18	0.738	212	0.718	No
	V	0	SLV 1	0	0	0	0	No
66	F	3.033	SLV 9	0.362	1.483	1618	1.653	Si
	V	0	SLV 1	0	0	0	0	No
67	F	0.979	SLV 3	0.238	0.976	445	0.974	No
	V	0	SLV 1	0	0	0	0	No
68	F	0.853	SLV 3	0.205	0.84	299	0.827	No
	V	0	SLV 1	0	0	0	0	No
69	F	0.686	SLV 1	0.162	0.661	164	0.647	No
	V	0	SLV 1	0	0	0	0	No
70	F	0.646	SLV 3	0.151	0.619	140	0.606	No
	V	0	SLV 1	0	0	0	0	No
71	F	1000	SLV 1	0.362	1.483	1618	1.653	Si
	V	0	SLV 1	0	0	0	0	No
72	F	1.137	SLV 15	0.276	1.13	684	1.161	Si
	V	0	SLV 1	0	0	0	0	No
73	F	0.697	SLV 13	0.164	0.673	170	0.656	No
	V	0	SLV 1	0	0	0	0	No
74	F	0.786	SLV 3	0.187	0.767	235	0.749	No
	V	0	SLV 1	0	0	0	0	No
75	F	0.294	SLV 7	0.069	0.281	21	0.278	No
	V	0.023	SLV 7	0	0	0	0	No
76	F	0.949	SLV 9	0.231	0.944	407	0.939	No
	V	0	SLV 1	0	0	0	0	No
77	F	0.506	SLV 9	0.118	0.482	78	0.477	No
	V	0	SLV 1	0	0	0	0	No
78	F	0.642	SLV 13	0.15	0.614	138	0.602	No
	V	0	SLV 1	0	0	0	0	No
79	F	0.375	SLV 15	0.085	0.346	35	0.343	No
	V	0	SLV 1	0	0	0	0	No
80	F	0.734	SLV 3	0.174	0.713	194	0.693	No
	V	0	SLV 1	0	0	0	0	No
81	F	1.032	SLV 13	0.252	1.031	519	1.037	Si
	V	0	SLV 1	0	0	0	0	No
82	F	0.547	SLV 15	0.127	0.518	93	0.512	No
	V	0.078	SLV 1	0	0	0	0	No
83	F	0.327	SLV 13	0.073	0.298	24	0.294	No
	V	0	SLV 1	0	0	0	0	No
84	F	0.341	SLV 15	0.077	0.313	27	0.309	No
	V	0	SLV 1	0	0	0	0	No
85	F	1000	SLV 1	0.362	1.483	1618	1.653	Si
	V	0	SLV 1	0	0	0	0	No
86	F	1.177	SLV 1	0.285	1.168	755	1.209	Si
	V	0	SLV 1	0	0	0	0	No
87	F	0.914	SLV 1	0.221	0.906	365	0.898	No
	V	0	SLV 1	0	0	0	0	No
88	F	1.134	SLV 3	0.275	1.127	679	1.158	Si
	V	0	SLV 1	0	0	0	0	No
89	F	1.17	SLV 1	0.284	1.161	743	1.201	Si
	V	0	SLV 1	0	0	0	0	No
90	F	1.249	SLV 13	0.302	1.237	896	1.297	Si
	V	0	SLV 1	0	0	0	0	No
91	F	1.006	SLV 13	0.246	1.006	483	1.007	Si
	V	0	SLV 1	0	0	0	0	No
92	F	0.385	SLV 3	0.087	0.355	37	0.351	No
	V	0	SLV 1	0	0	0	0	No
93	F	0.808	SLV 3	0.193	0.792	255	0.775	No
	V	0.019	SLV 3	0	0	0	0	No
94	F	0.99	SLV 11	0.242	0.989	461	0.988	No
	V	0	SLV 1	0	0	0	0	No
95	F	0.378	SLV 11	0.088	0.359	38	0.355	No
	V	0	SLV 1	0	0	0	0	No
96	F	0.658	SLV 15	0.154	0.631	147	0.618	No
	V	0	SLV 1	0	0	0	0	No

Trave	Stato limite	Molt.	Comb.	PGA	iPGA (ζE)	TR	(TR/TRrif)^.41	Verifica
97	F	1.051	SLV 15	0.256	1.049	547	1.06	Si
	V	0	SLV 1	0	0	0	0	No
98	F	3.154	SLV 3	0.362	1.483	1618	1.653	Si
	V	0	SLV 1	0	0	0	0	No
99	F	1.131	SLV 3	0.275	1.124	674	1.154	Si
	V	0	SLV 1	0	0	0	0	No
100	F	1.124	SLV 1	0.273	1.118	662	1.146	Si
	V	0	SLV 1	0	0	0	0	No
101	F	1.15	SLV 15	0.279	1.143	707	1.177	Si
	V	0	SLV 1	0	0	0	0	No
102	F	1.093	SLV 15	0.266	1.089	612	1.109	Si
	V	0	SLV 1	0	0	0	0	No
103	F	0.865	SLV 15	0.208	0.852	310	0.839	No
	V	0	SLV 1	0	0	0	0	No
104	F	2.854	SLV 11	0.362	1.483	1618	1.653	Si
	V	0	SLV 1	0	0	0	0	No
105	F	1.382	SLV 3	0.334	1.365	1231	1.478	Si
	V	0	SLV 1	0	0	0	0	No
106	F	1.392	SLV 3	0.336	1.375	1261	1.492	Si
	V	0	SLV 1	0	0	0	0	No
107	F	1.109	SLV 3	0.27	1.104	637	1.128	Si
	V	0	SLV 1	0	0	0	0	No
108	F	0.935	SLV 3	0.227	0.928	389	0.921	No
	V	0	SLV 1	0	0	0	0	No
109	F	1000	SLV 1	0.362	1.483	1618	1.653	Si
	V	0	SLV 1	0	0	0	0	No
110	F	1.3	SLV 15	0.314	1.286	1011	1.363	Si
	V	0	SLV 1	0	0	0	0	No
111	F	0.741	SLV 13	0.176	0.72	199	0.7	No
	V	0	SLV 1	0	0	0	0	No
112	F	0.911	SLV 3	0.22	0.902	361	0.894	No
	V	0	SLV 1	0	0	0	0	No
113	F	0.25	SLV 7	0.057	0.234	13	0.229	No
	V	0	SLV 1	0	0	0	0	No
114	F	0.23	SLV 11	0.053	0.218	11	0.214	No
	V	0.012	SLV 9	0	0	0	0	No
115	F	0.781	SLV 13	0.186	0.763	232	0.745	No
	V	0	SLV 1	0	0	0	0	No
116	F	0.438	SLV 11	0.102	0.417	54	0.41	No
	V	0	SLV 1	0	0	0	0	No
117	F	0.935	SLV 3	0.227	0.928	389	0.921	No
	V	0	SLV 1	0	0	0	0	No
118	F	0.646	SLV 15	0.151	0.619	140	0.606	No
	V	0.01	SLV 1	0	0	0	0	No
119	F	0.369	SLV 13	0.083	0.342	34	0.339	No
	V	0	SLV 1	0	0	0	0	No
120	F	2.629	SLV 3	0.362	1.483	1618	1.653	Si
	V	0	SLV 1	0	0	0	0	No
121	F	0.528	SLV 15	0.122	0.498	84	0.491	No
	V	0	SLV 1	0	0	0	0	No
122	F	1.797	SLV 3	0.362	1.483	1618	1.653	Si
	V	0	SLV 1	0	0	0	0	No
123	F	1.737	SLV 1	0.362	1.483	1618	1.653	Si
	V	0	SLV 1	0	0	0	0	No
124	F	1.933	SLV 13	0.362	1.483	1618	1.653	Si
	V	0	SLV 1	0	0	0	0	No
125	F	2.092	SLV 1	0.362	1.483	1618	1.653	Si
	V	0	SLV 1	0	0	0	0	No
126	F	1.836	SLV 15	0.362	1.483	1618	1.653	Si
	V	0	SLV 1	0	0	0	0	No
127	F	1.732	SLV 13	0.362	1.483	1618	1.653	Si
	V	0	SLV 1	0	0	0	0	No
128	F	0.955	SLV 7	0.232	0.95	415	0.946	No
	V	0	SLV 1	0	0	0	0	No
129	F	0.978	SLV 1	0.238	0.975	444	0.973	No
	V	0	SLV 1	0	0	0	0	No
130	F	0.409	SLV 7	0.096	0.392	46	0.384	No
	V	0.012	SLV 5	0	0	0	0	No
131	F	0.252	SLV 11	0.059	0.242	14	0.236	No
	V	0	SLV 1	0	0	0	0	No
132	F	0.852	SLV 15	0.205	0.838	297	0.825	No
	V	0	SLV 1	0	0	0	0	No
133	F	1.298	SLV 15	0.314	1.284	1006	1.36	Si
	V	0	SLV 1	0	0	0	0	No
134	F	1000	SLV 1	0.362	1.483	1618	1.653	Si
	V	0.03	SLV 13	0	0	0	0	No
135	F	1.43	SLV 3	0.345	1.412	1375	1.546	Si
	V	0	SLV 1	0	0	0	0	No
136	F	1.538	SLV 1	0.362	1.483	1618	1.653	Si
	V	0	SLV 1	0	0	0	0	No
137	F	1.708	SLV 1	0.362	1.483	1618	1.653	Si
	V	0	SLV 1	0	0	0	0	No
138	F	1.495	SLV 15	0.36	1.475	1587	1.64	Si
	V	0	SLV 1	0	0	0	0	No
139	F	1.388	SLV 15	0.335	1.371	1249	1.486	Si
	V	0	SLV 1	0	0	0	0	No
140	F	3.724	SLV 11	0.362	1.483	1618	1.653	Si
	V	0	SLV 1	0	0	0	0	No
141	F	2.123	SLV 3	0.362	1.483	1618	1.653	Si
	V	0	SLV 1	0	0	0	0	No
142	F	0.543	SLV 13	0.125	0.513	90	0.506	No
	V	0	SLV 1	0	0	0	0	No

Trave	Stato limite	Molt.	Comb.	PGA	iPGA (ζE)	TR	(TR/TRrif)^.41	Verifica
143	F	1.926	SLV 1	0.362	1.483	1618	1.653	Si
	V	0	SLV 1	0	0	0	0	No
144	F	1.066	SLV 1	0.26	1.063	570	1.078	Si
	V	0	SLV 1	0	0	0	0	No
145	F	1000	SLV 1	0.362	1.483	1618	1.653	Si
	V	0.174	SLV 1	0.038	0.157	5	0.155	No
146	F	1.206	SLV 3	0.292	1.195	810	1.245	Si
	V	0	SLV 1	0	0	0	0	No
147	F	0.992	SLV 13	0.242	0.991	464	0.99	No
	V	0.039	SLV 13	0	0	0	0	No
148	F	0.356	SLV 7	0.082	0.337	33	0.335	No
	V	0	SLV 1	0	0	0	0	No
149	F	0.323	SLV 7	0.075	0.308	26	0.304	No
	V	0	SLV 1	0	0	0	0	No
150	F	0.531	SLV 9	0.124	0.508	88	0.501	No
	V	0	SLV 1	0	0	0	0	No
151	F	1.028	SLV 9	0.251	1.027	514	1.033	Si
	V	0	SLV 1	0	0	0	0	No
152	F	2.568	SLV 13	0.362	1.483	1618	1.653	Si
	V	0	SLV 1	0	0	0	0	No
153	F	1.329	SLV 13	0.321	1.314	1085	1.403	Si
	V	0	SLV 1	0	0	0	0	No
154	F	2.004	SLV 1	0.362	1.483	1618	1.653	Si
	V	0	SLV 1	0	0	0	0	No
155	F	0.453	SLV 13	0.104	0.424	56	0.416	No
	V	0	SLV 1	0	0	0	0	No
156	F	0.807	SLV 15	0.193	0.791	254	0.774	No
	V	0.051	SLV 15	0	0	0	0	No
157	F	2.778	SLV 15	0.362	1.483	1618	1.653	Si
	V	0	SLV 1	0	0	0	0	No
158	F	2.336	SLV 3	0.362	1.483	1618	1.653	Si
	V	0	SLV 1	0	0	0	0	No
159	F	0.694	SLV 3	0.163	0.669	168	0.653	No
	V	0	SLV 1	0	0	0	0	No
160	F	3.145	SLV 13	0.362	1.483	1618	1.653	Si
	V	0.217	SLV 3	0.049	0.201	9	0.197	No
161	F	1.483	SLV 15	0.357	1.463	1546	1.622	Si
	V	0	SLV 1	0	0	0	0	No
162	F	2.55	SLV 1	0.362	1.483	1618	1.653	Si
	V	0.089	SLV 15	0.02	0.08	1	0.08	No
163	F	0.803	SLV 15	0.192	0.785	250	0.769	No
	V	0	SLV 1	0	0	0	0	No
164	F	1.431	SLV 1	0.345	1.413	1378	1.548	Si
	V	0	SLV 1	0	0	0	0	No
165	F	0.376	SLV 11	0.088	0.359	38	0.355	No
	V	0	SLV 1	0	0	0	0	No
166	F	1.306	SLV 1	0.316	1.292	1026	1.371	Si
	V	0.021	SLV 3	0	0	0	0	No
167	F	0.671	SLV 11	0.159	0.65	157	0.635	No
	V	0	SLV 1	0	0	0	0	No
168	F	1000	SLV 1	0.362	1.483	1618	1.653	Si
	V	0.073	SLV 13	0	0	0	0	No
169	F	0.635	SLV 11	0.15	0.612	137	0.601	No
	V	0	SLV 1	0	0	0	0	No
170	F	2.087	SLV 1	0.362	1.483	1618	1.653	Si
	V	0.173	SLV 1	0.038	0.157	5	0.155	No
171	F	0.804	SLV 3	0.192	0.787	251	0.77	No
	V	0	SLV 1	0	0	0	0	No
172	F	2.377	SLV 15	0.362	1.483	1618	1.653	Si
	V	0	SLV 1	0	0	0	0	No
173	F	0.747	SLV 1	0.177	0.727	203	0.706	No
	V	0	SLV 1	0	0	0	0	No
174	F	2.547	SLV 7	0.362	1.483	1618	1.653	Si
	V	0	SLV 1	0	0	0	0	No
175	F	2.021	SLV 9	0.362	1.483	1618	1.653	Si
	V	0.129	SLV 3	0.026	0.107	2	0.106	No
176	F	0.883	SLV 11	0.213	0.871	329	0.86	No
	V	0	SLV 1	0	0	0	0	No
177	F	2.671	SLV 7	0.362	1.483	1618	1.653	Si
	V	0	SLV 1	0	0	0	0	No
178	F	1000	SLV 1	0.362	1.483	1618	1.653	Si
	V	0.005	SLV 5	0	0	0	0	No
179	F	0	SLV 1	0	0	0	0	No
	V	0	SLV 1	0	0	0	0	No
180	F	0.5	SLV 15	0.115	0.471	73	0.464	No
	V	0.023	SLV 15	0	0	0	0	No
181	F	0.292	SLV 13	0.066	0.269	19	0.267	No
	V	0	SLV 1	0	0	0	0	No
182	F	0.763	SLV 13	0.181	0.743	216	0.724	No
	V	0	SLV 13	0	0	0	0	No
183	F	0.701	SLV 13	0.166	0.678	173	0.661	No
	V	0	SLV 1	0	0	0	0	No
184	F	2.03	SLV 13	0.362	1.483	1618	1.653	Si
	V	0.07	SLV 13	0	0	0	0	No
185	F	2.795	SLV 9	0.362	1.483	1618	1.653	Si
	V	0	SLV 1	0	0	0	0	No

Periodi di ritorno e accelerazioni di aggancio per gli Stati Limite

S. L.	TR,C	PGA,C	TR,Rif	PGA,Rif	Tipo rottura
Stato limite di salvaguardia della vita	0	0	475	0.244	taglio maschio muratura

Coefficienti relativi alle Linee guida per la classificazione del rischio sismico delle costruzioni secondo il D.M. 24 09/01/2020

TR,C	TR,Rif	PAM	Classe PAM	IS-V	Classe IS-V	Tipo rottura
0	475	8.22	G	0	F	taglio maschio muratura

Classe PAM

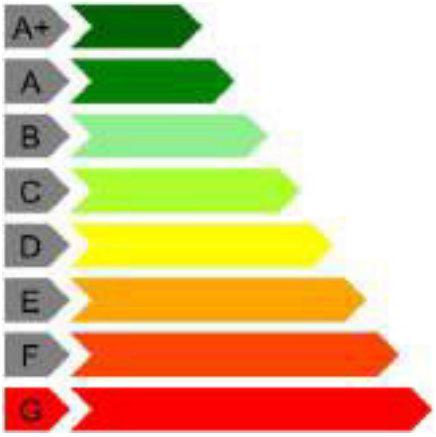

Classe IS-V

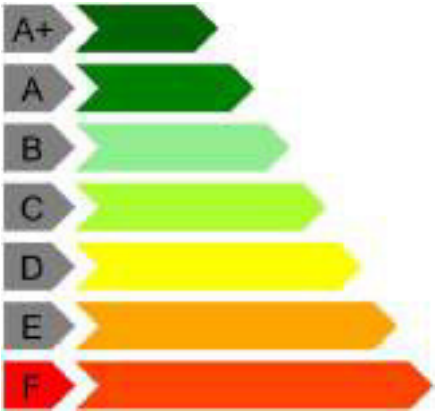

2.3 Verifiche maschi in muratura

Le unità di misura elencate nel capitolo sono in [m, daN, s] ove non espressamente specificato.

X ini.: *coordinate del punto iniziale del maschio. [m]*
Y ini.: *coordinate del punto iniziale del maschio. [m]*
X fin.: *coordinate del punto finale del maschio. [m]*
Y fin.: *coordinate del punto finale del maschio. [m]*
Quota i.: *livello o falda inferiore.*
Quota.s: *livello o falda superiore.*
l: *lunghezza del maschio. [m]*
Sp.: *spessore. [m]*
h netta: *altezza netta (a filo solai). [m]*
h ini.: *altezza nel modello al punto iniziale. [m]*
h fin.: *altezza nel modello al punto finale. [m]*
a: *distanza tra irrigidimenti laterali. [m]*
a.s.,sx: *lunghezza di appoggio del solaio di sinistra. [m]*
a.s.,dx: *lunghezza di appoggio del solaio di destra. [m]*
fb: *resistenza normalizzata a compressione verticale dei blocchi. [daN/m²]*
fk: *resistenza caratteristica a compressione della muratura utilizzata. [daN/m²]*
fvk0: *resistenza caratteristica a taglio in assenza di carichi verticali. [daN/m²]*
fmedio: *resistenza media a compressione della muratura utilizzata. [daN/m²]*
τ0: *resistenza media a taglio in assenza di azioni normali [C8.7.1.16]. [daN/m²]*
fv0: *resistenza media a taglio in assenza di azioni normali [C8.7.1.17]. [daN/m²]*
μ: *coefficiente di attrito [C8.7.1.17].*
φ: *coefficiente di ammorsamento o ingranamento secondo Circolare 7 21-01-19 §C8.7.1.3.1.1.*
fv,lim: *valore massimo della resistenza a taglio che può essere impiegata nel calcolo. [daN/m²]*
E: *modulo di elasticità longitudinale della muratura utilizzato. [daN/m²]*

G: modulo di elasticità tangenziale della muratura utilizzato. [daN/m²]
FC: fattore di confidenza della muratura.
Comb.: combinazione.
Quota: quota della sezione di verifica. [m]
N: sforzo normale. [daN]
*M: momento flettente nel piano. [daN*m]*
σ0: tensione media di compressione. [daN/m²]
*Mu: momento flettente ultimo. [daN*m]*
c.s.: coefficiente di sicurezza.
Verifica: stato di verifica.
V par: taglio nel piano. [daN]
σN: tensione media di compressione sulla parte reagente. [daN/m²]
l': lunghezza della parte compressa della parete. [m]
fvd: resistenza a taglio di calcolo. [daN/m²]
Vt scorr.: taglio ultimo per verifica a scorrimento. [daN]
Vt fess.diag.: taglio ultimo per verifica a fessurazione diagonale regolare [C8.7.1.17]. [daN]
Vt,lim: taglio limite [C8.7.1.18]. [daN]
c.s.: coefficiente di sicurezza a taglio.
fd: resistenza a compressione di calcolo. [daN/m²]
Sa: accelerazione massima, adimensionalizzata rispetto a g, che l'elemento strutturale subisce durante il sisma.
*M: momento flettente fuori piano. [daN*m]*
*Mc: momento di collasso per azioni perpendicolari al piano. [daN*m]*
Coeff.s.: coefficiente di sicurezza.
N top: sforzo normale in sommità. [daN]
N base: sforzo normale al piede. [daN]
V orto: taglio fuori piano. [daN]
α0: moltiplicatore secondo [C8.7.1.1].
M: massa partecipante al cinematismo. [daN/(m/s²)]*
e: frazione di massa partecipante della muratura [C8.7.1.5].*
a0: accelerazione spettrale di attivazione del meccanismo [C8.7.1.8]. [m/s²]*
aLim: accelerazione limite [C7.2.11]. [m/s²]
Stato limite: pF_SLU=Presso flessione per azioni non sismiche; V_SLU=Taglio per azioni non sismiche; PF_SLV=Presso flessione per azioni sismiche; V_SLV=Taglio per azioni sismiche; PFFP_SLV=Presso flessione fuori piano per azioni sismiche; R_SLV=Ribaltamento per azioni sismiche.

Maschio 1

Verifiche condotte secondo D.M. 17-01-18 (N.T.C.)

Dati geometrici

X ini.	Y ini.	X fin.	Y fin.	Quota i.	Quota.s	l	Sp.	h netta	h ini.	h fin.	a	a.s.,sx	a.s.,dx
-24.653	5.771	-24.653	-3.32	L1	L3	9.091	0.45	2.7	2.7	2.7			

Caratteristiche del materiale

(Circolare 7 21-01-19 C8.5.I) Muratura in mattoni pieni e malta di calce LC2_Corti

fb	fk	fvk0	fmedio	τ0	fv0	μ	ϕ	fv,lim	E	G	FC
600000			345000	9000	20000	0.58	0.77	32500	320000000	128000000	1.2

Verifica a pressoflessione nel piano secondo D.M. 17-01-18 NTC §7.8.2.2.1 in combinazioni non sismiche, γM = 3

Comb.	Quota	N	M	σ0	Mu	c.s.	Verifica
SLU 81	-2.03	-182734	16189.45	44668	375142.64	23.172	Si
SLU 81	0.67	-162156	37933.29	39638	378412.59	9.976	Si
SLU 83	-2.03	-185512	14849.09	45347	373816.03	25.174	Si
SLU 83	0.67	-164904	37017.71	40310	378644.3	10.229	Si
SLU 61	-2.03	-168855	19715.68	41275	378616.35	19.204	Si
SLU 61	0.67	-147215	34189.04	35986	373548.01	10.926	Si
SLU 82	-2.03	-182282	20705.83	44557	375338.78	18.127	Si
SLU 82	0.67	-160854	37160.48	39320	378230.94	10.178	Si
SLU 73	-2.03	-176146	22949.14	43058	377446.84	16.447	Si
SLU 73	0.67	-154089	35076.46	37666	376542.54	10.735	Si
SLU 60	-2.03	-169307	15199.3	41386	378585.97	24.908	Si
SLU 60	0.67	-148517	34961.85	36304	374213.99	10.703	Si
SLU 74	-2.03	-180793	14471.74	44193	375944.76	25.978	Si
SLU 74	0.67	-160209	36006.97	39162	378123.76	10.501	Si
SLU 84	-2.03	-185060	19365.47	45237	374046.47	19.315	Si
SLU 84	0.67	-163602	36244.91	39991	378560.25	10.445	Si
SLU 77	-2.03	-183571	13131.38	44873	374765.32	28.54	Si
SLU 77	0.67	-162957	35091.39	39834	378501.44	10.786	Si
SLU 75	-2.03	-180340	18988.12	44083	376116.93	19.808	Si
SLU 75	0.67	-158907	35234.17	38844	377872.97	10.725	Si

Verifica a pressoflessione nel piano secondo D.M. 17-01-18 NTC §7.8.2.2.1 in combinazioni sismiche, γM = 2

Comb.	Quota	N	M	σ0	Mu	c.s.	Verifica
SLV 12	-2.03	-103718	-169735.96	25353	373626.61	2.201	Si
SLV 12	0.67	-88156	-124191.5	21549	330041.53	2.658	Si
SLV 10	-2.03	-103190	182164.48	25224	372220.12	2.043	Si
SLV 10	0.67	-89908	156371.25	21977	335168.63	2.143	Si
SLV 11	-2.03	-103718	-169735.96	25353	373626.61	2.201	Si
SLV 11	0.67	-88156	-124191.5	21549	330041.53	2.658	Si
SLV 7	-2.03	-149897	-160605.85	36641	477030.46	2.97	Si
SLV 7	0.67	-131188	-105271.97	32068	439810.86	4.178	Si
SLV 9	-2.03	-103190	182164.48	25224	372220.12	2.043	Si

Comb.	Quota	N	M	σ0	Mu	c.s.	Verifica
SLV 9	0.67	-89908	156371.25	21977	335168.63	2.143	Si
SLV 6	-2.03	-149369	191294.59	36512	476067.39	2.489	Si
SLV 6	0.67	-132940	175290.79	32496	443566.72	2.53	Si
SLV 15	-2.03	-49659	-57222.61	12139	203299.27	3.553	Si
SLV 15	0.67	-38565	-48067.33	9427	161773.05	3.366	Si
SLV 16	-2.03	-49659	-57222.61	12139	203299.27	3.553	Si
SLV 16	0.67	-38565	-48067.33	9427	161773.05	3.366	Si
SLV 5	-2.03	-149369	191294.59	36512	476067.39	2.489	Si
SLV 5	0.67	-132940	175290.79	32496	443566.72	2.53	Si
SLV 8	-2.03	-149897	-160605.85	36641	477030.46	2.97	Si
SLV 8	0.67	-131188	-105271.97	32068	439810.86	4.178	Si

Verifica a taglio nel piano secondo D.M. 17-01-18 (N.T.C.) §7.8.2.2.2 con rottura per scorrimento in combinazioni non sismiche, γM = 3

Comb.	Quota	N	V par	M	σ0	σN	l'	fvd	Vt scorr.	Vt fess.diag.	Vt,lim	c.s.	Verifica
SLU 26	-2.03	-134269	1587	17161.76		32821	9.091	9932	40630			25.6	Si
SLU 26	0.67	-116938	912	24422.63		28585	9.091	9367	38319			42.02	Si
SLU 5	-2.03	-120842	1593	16171.61		29539	9.091	9494	38840			24.38	Si
SLU 5	0.67	-103299	989	21451.2		25251	9.091	8922	36501			36.9	Si
SLU 31	-2.03	-145104	1617	20293.22		35470	9.091	10285	42075			26.02	Si
SLU 31	0.67	-127949	886	28998.8		31276	9.091	9726	39787			44.93	Si
SLU 23	-2.03	-131490	1616	18502.12		32142	9.091	9841	40259			24.92	Si
SLU 23	0.67	-114189	955	25338.21		27913	9.091	9277	37953			39.75	Si
SLU 44	-2.03	-149105	1596	20167.89		36448	9.091	10415	42608			26.7	Si
SLU 44	0.67	-126690	855	28444.43		30968	9.091	9685	39619			46.36	Si
SLU 34	-2.03	-147882	1589	18952.86		36149	9.091	10375	42445			26.71	Si
SLU 34	0.67	-130698	843	28083.22		31948	9.091	9815	40154			47.64	Si
SLU 10	-2.03	-131677	1623	19303.07		32188	9.091	9847	40284			24.82	Si
SLU 10	0.67	-114310	963	26027.36		27942	9.091	9281	37969			39.43	Si
SLU 47	-2.03	-151884	1568	18827.53		37127	9.091	10506	42979			27.41	Si
SLU 47	0.67	-129438	812	27528.85		31640	9.091	9774	39986			49.25	Si
SLU 2	-2.03	-118064	1621	17511.97		28860	9.091	9404	38469			23.73	Si
SLU 2	0.67	-100550	1032	22366.77		24579	9.091	8833	36134			35.01	Si
SLU 13	-2.03	-134455	1595	17962.7		32867	9.091	9938	40655			25.49	Si
SLU 13	0.67	-117059	920	25111.79		28614	9.091	9371	38335			41.66	Si

Verifica a taglio nel piano secondo D.M. 17-01-18 (N.T.C.) §7.8.2.2.2 con rottura per scorrimento in combinazioni sismiche, γM = 2

Comb.	Quota	N	V par	M	σ0	σN	l'	fvd	Vt scorr.	Vt fess.diag.	Vt,lim	c.s.	Verifica
SLV 16	-2.03	-49659	-14895	-57222.61		12139	9.091	10761	44023			2.96	Si
SLV 16	0.67	-38565	-15070	-48067.33		9427	9.091	10219	41804			2.77	Si
SLV 10	-2.03	-103190	49119	182164.48		27494	8.3405	13832	51915			1.06	Si
SLV 10	0.67	-89908	44109	156371.25		23732	8.4187	13080	49552			1.12	Si
SLV 9	-2.03	-103190	49119	182164.48		27494	8.3405	13832	51915			1.06	Si
SLV 9	0.67	-89908	44109	156371.25		23732	8.4187	13080	49552			1.12	Si
SLV 6	-2.03	-149369	49141	191294.59		36512	9.091	15636	63965			1.3	Si
SLV 6	0.67	-132940	44604	175290.79		32496	9.091	14833	60679			1.36	Si
SLV 7	-2.03	-149897	-49304	-160605.85		36641	9.091	15662	64070			1.3	Si
SLV 7	0.67	-131188	-45553	-105271.97		32068	9.091	14747	60329			1.32	Si
SLV 8	-2.03	-149897	-49304	-160605.85		36641	9.091	15662	64070			1.3	Si
SLV 8	0.67	-131188	-45553	-105271.97		32068	9.091	14747	60329			1.32	Si
SLV 11	-2.03	-103718	-49326	-169735.96		26411	8.7269	13616	53470			1.08	Si
SLV 11	0.67	-88156	-46047	-124191.5		21549	9.091	12643	51722			1.12	Si
SLV 12	-2.03	-103718	-49326	-169735.96		26411	8.7269	13616	53470			1.08	Si
SLV 12	0.67	-88156	-46047	-124191.5		21549	9.091	12643	51722			1.12	Si
SLV 5	-2.03	-149369	49141	191294.59		36512	9.091	15636	63965			1.3	Si
SLV 5	0.67	-132940	44604	175290.79		32496	9.091	14833	60679			1.36	Si
SLV 15	-2.03	-49659	-14895	-57222.61		12139	9.091	10761	44023			2.96	Si
SLV 15	0.67	-38565	-15070	-48067.33		9427	9.091	10219	41804			2.77	Si

Verifica a pressoflessione fuori piano D.M. 17-01-18 (N.T.C.)

quota -0.68 Wa 0.08 denominatore 8 γM = 2

Comb.	fd	Sa	σ0	N	M	Mc	Coeff.s.	Verifica
SLV 15	143750	0.24	10941	-44758	546.47	9168.74	16.78	Si
SLV 16	143750	0.24	10941	-44758	546.47	9168.74	16.78	Si
SLV 13	143750	0.24	10942	-44764	546.47	9170.01	16.78	Si
SLV 14	143750	0.24	10942	-44764	546.47	9170.01	16.78	Si
SLV 12	143750	0.24	23536	-96286	546.47	17491.18	32.01	Si
SLV 11	143750	0.24	23536	-96286	546.47	17491.18	32.01	Si
SLV 10	143750	0.24	23542	-96308	546.47	17494.34	32.01	Si
SLV 9	143750	0.24	23542	-96308	546.47	17494.34	32.01	Si
SLV 7	143750	0.24	34334	-140459	546.47	22722.9	41.58	Si
SLV 8	143750	0.24	34334	-140459	546.47	22722.9	41.58	Si

Verifica dei meccanismi locali di collasso con analisi cinematica lineare

forza di aggancio al piano = 0 quota mezzeria = -0.68 Wa = 0.08 Ta = 0.0271

Comb.	N top	N base	V orto	α0	M*	e*	a0*	aLim	Verifica
SLV 2	-182531	-203428	-1137	0.082	20140.1	0.976	1.21687	3.47592	No
SLV 1	-182531	-203428	-1137	0.082	20140.1	0.976	1.21687	3.47592	No
SLV 4	-182005	-203586	-1074	0.082	20086.5	0.976	1.22181	3.47592	No
SLV 3	-182005	-203586	-1074	0.082	20086.5	0.976	1.22181	3.47592	No
SLV 5	-132940	-149369	-731	0.084	15089.8	0.969	1.26053	3.33245	No
SLV 6	-132940	-149369	-731	0.084	15089.8	0.969	1.26053	3.33245	No
SLV 8	-131188	-149897	-519	0.086	14911.4	0.968	1.28368	3.33245	No
SLV 7	-131188	-149897	-519	0.086	14911.4	0.968	1.28368	3.33245	No
SLV 10	-89908	-103190	-319	0.088	10711.5	0.957	1.34284	3.33245	No
SLV 9	-89908	-103190	-319	0.088	10711.5	0.957	1.34284	3.33245	No

Tabella dei coefficienti di sicurezza minimi

Stato limite	Coeff.s.	Comb.	Verifica
PF_SLU	9.976	SLU 81	Si

Stato limite	Coeff.s.	Comb.	Verifica
V_SLU	23.725	SLU 2	Si
PF_SLV	2.043	SLV 9	Si
V_SLV	1.057	SLV 9	Si
PFFP_SLV	16.778	SLV 15	Si
R_SLV	0.35	SLV 1	No

Maschio 2

Verifiche condotte secondo D.M. 17-01-18 (N.T.C.)

Dati geometrici

X ini.	Y ini.	X fin.	Y fin.	Quota i.	Quota.s	l	Sp.	h netta	h ini.	h fin.	a	a.s.,sx	a.s.,dx
-22.883	5.771	-24.653	5.771	L1	L3	1.77	0.45	2.7	2.7	2.7			

Caratteristiche del materiale

(Circolare 7 21-01-19 C8.5.I) Muratura in mattoni pieni e malta di calce LC2_Corti

fb	fk	fvk0	fmedio	τ0	fv0	μ	ϕ	fv,lim	E	G	FC
600000			345000	9000	20000	0.58	0.77	32500	320000000	128000000	1.2

Verifica a pressoflessione nel piano secondo D.M. 17-01-18 NTC §7.8.2.2.1 in combinazioni non sismiche, γM = 3

Comb.	Quota	N	M	σ0	Mu	c.s.	Verifica
SLU 78	-0.03	-31755	-1690.46	39867	14349.68	8.489	Si
SLU 78	0.37	-31034	-1772.56	38962	14329.08	8.084	Si
SLU 80	-0.03	-31584	-1672.08	39652	14346.09	8.58	Si
SLU 80	0.37	-30868	-1759.4	38753	14322.32	8.14	Si
SLU 75	-0.03	-31210	-1754.19	39183	14335.43	8.172	Si
SLU 75	0.37	-30480	-1795.18	38266	14303.63	7.968	Si
SLU 83	-0.03	-32624	-1839.74	40957	14355.67	7.803	Si
SLU 83	0.37	-31888	-1882.46	40034	14351.94	7.624	Si
SLU 81	-0.03	-32079	-1903.47	40273	14354.32	7.541	Si
SLU 81	0.37	-31335	-1905.09	39339	14339.4	7.527	Si
SLU 73	-0.03	-30315	-1807.86	38059	14294.42	7.907	Si
SLU 73	0.37	-29598	-1815.82	37158	14245.76	7.845	Si
SLU 82	-0.03	-31809	-1915.94	39934	14350.65	7.49	Si
SLU 82	0.37	-31090	-1921.85	39032	14331.2	7.457	Si
SLU 74	-0.03	-31480	-1741.71	39522	14343.5	8.235	Si
SLU 74	0.37	-30725	-1778.41	38573	14315.9	8.05	Si
SLU 76	-0.03	-30860	-1744.13	38743	14321.97	8.212	Si
SLU 76	0.37	-30151	-1793.2	37853	14284.54	7.966	Si
SLU 84	-0.03	-32354	-1852.22	40618	14356.01	7.751	Si
SLU 84	0.37	-31644	-1899.23	39727	14347.43	7.554	Si

Verifica a pressoflessione nel piano secondo D.M. 17-01-18 NTC §7.8.2.2.1 in combinazioni sismiche, γM = 2

Comb.	Quota	N	M	σ0	Mu	c.s.	Verifica
SLV 15	-0.03	-16881	-4584.73	21193	12348.76	2.693	Si
SLV 15	0.37	-16087	-1092.78	20197	11884.33	10.875	Si
SLV 6	-0.03	-9201	-546.6	11551	7373.36	13.49	Si
SLV 6	0.37	-8761	-1928.7	10999	7055.89	3.658	Si
SLV 9	-0.03	-3678	-2649.57	4618	3132.39	1.182	Si
SLV 9	0.37	-3148	-2006.08	3952	2695.72	1.344	Si
SLV 1	-0.03	-26223	2185.96	32921	16954.94	7.756	Si
SLV 1	0.37	-25804	-1298.05	32395	16782.48	12.929	Si
SLV 16	-0.03	-16881	-4584.73	21193	12348.76	2.693	Si
SLV 16	0.37	-16087	-1092.78	20197	11884.33	10.875	Si
SLV 10	-0.03	-3678	-2649.57	4618	3132.39	1.182	Si
SLV 10	0.37	-3148	-2006.08	3952	2695.72	1.344	Si
SLV 14	-0.03	-7814	-4823.95	9810	6360.09	1.318	Si
SLV 14	0.37	-7093	-1555.96	8904	5819.67	3.74	Si
SLV 5	-0.03	-9201	-546.6	11551	7373.36	13.49	Si
SLV 5	0.37	-8761	-1928.7	10999	7055.89	3.658	Si
SLV 2	-0.03	-26223	2185.96	32921	16954.94	7.756	Si
SLV 2	0.37	-25804	-1298.05	32395	16782.48	12.929	Si
SLV 13	-0.03	-7814	-4823.95	9810	6360.09	1.318	Si
SLV 13	0.37	-7093	-1555.96	8904	5819.67	3.74	Si

Verifica a taglio nel piano secondo D.M. 17-01-18 (N.T.C.) §7.8.2.2.2 con rottura per scorrimento in combinazioni non sismiche, γM = 3

Comb.	Quota	N	V par	M	σ0	σN	l'	fvd	Vt scorr.	Vt fess.diag.	Vt,lim	c.s.	Verifica
SLU 35	-0.03	-27053	269	-1427.16		33964	1.7701	10084	8032			29.8	Si
SLU 35	0.37	-26499	229	-1513.51		33268	1.7701	9991	7958			34.83	Si
SLU 36	-0.03	-26783	336	-1439.63		33625	1.7701	10039	7996			23.77	Si
SLU 36	0.37	-26254	295	-1530.28		32961	1.7701	9950	7926			26.82	Si
SLU 43	-0.03	-24827	-222	-1315.46		31168	1.7701	9711	7735			34.83	Si
SLU 43	0.37	-24013	-260	-1297.63		30147	1.7701	9575	7627			29.35	Si
SLU 28	-0.03	-23718	249	-1168.03		29776	1.7701	9526	7588			30.51	Si
SLU 28	0.37	-23151	212	-1256.79		29065	1.7701	9431	7512			35.45	Si
SLU 38	-0.03	-26613	359	-1421.26		33411	1.7701	10010	7974			22.21	Si
SLU 38	0.37	-26088	318	-1517.12		32752	1.7701	9923	7904			24.82	Si
SLU 37	-0.03	-26883	292	-1408.78		33750	1.7701	10056	8010			27.42	Si
SLU 37	0.37	-26333	251	-1500.35		33059	1.7701	9963	7936			31.57	Si
SLU 42	-0.03	-27382	274	-1601.39		34377	1.7701	10139	8076			29.5	Si
SLU 42	0.37	-26864	233	-1656.95		33727	1.7701	10052	8007			34.43	Si
SLU 30	-0.03	-23547	271	-1149.65		29562	1.7701	9497	7565			27.88	Si
SLU 30	0.37	-22985	235	-1243.64		28857	1.7701	9403	7490			31.9	Si
SLU 34	-0.03	-25888	281	-1493.31		32501	1.7701	9889	7877			28.06	Si
SLU 34	0.37	-25372	241	-1550.92		31853	1.7701	9803	7808			32.35	Si
SLU 17	-0.03	-23740	256	-1221.27		29804	1.7701	9529	7591			29.6	Si
SLU 17	0.37	-23199	220	-1300.35		29126	1.7701	9439	7518			34.18	Si

Verifica a taglio nel piano secondo D.M. 17-01-18 (N.T.C.) §7.8.2.2.2 con rottura per scorrimento in combinazioni sismiche, γM = 2

Comb.	Quota	N	V par	M	σ0	σN	l'	fvd	Vt scorr.	Vt fess.diag.	Vt,lim	c.s.	Verifica
SLV 5	-0.03	-9201	8532	-546.6		11551	1.7701	10644	8478			0.99	No, Vu<V
SLV 5	0.37	-8761	8547	-1928.7		10999	1.7701	10533	8390			0.98	No, Vu<V
SLV 16	-0.03	-16881	-13615	-4584.73		21193	1.7701	12572	10014			0.74	No, Vu<V
SLV 16	0.37	-16087	-13840	-1092.78		20197	1.7701	12373	9855			0.71	No, Vu<V
SLV 13	-0.03	-7814	-10606	-4823.95		21624	0.803	12658	4574			0.43	No, Vu<V
SLV 13	0.37	-7093	-10838	-1555.96		8904	1.7701	10114	8056			0.74	No, Vu<V
SLV 14	-0.03	-7814	-10606	-4823.95		21624	0.803	12658	4574			0.43	No, Vu<V
SLV 14	0.37	-7093	-10838	-1555.96		8904	1.7701	10114	8056			0.74	No, Vu<V
SLV 1	-0.03	-26223	13436	2185.96		32921	1.7701	14918	11882			0.88	No, Vu<V
SLV 1	0.37	-25804	13597	-1298.05		32395	1.7701	14812	11799			0.87	No, Vu<V
SLV 15	-0.03	-16881	-13615	-4584.73		21193	1.7701	12572	10014			0.74	No, Vu<V
SLV 15	0.37	-16087	-13840	-1092.78		20197	1.7701	12373	9855			0.71	No, Vu<V
SLV 3	-0.03	-35290	10427	2425.18		44304	1.7701	16250	12944			1.24	Si
SLV 3	0.37	-34799	10594	-834.87		43688	1.7701	16250	12944			1.22	Si
SLV 2	-0.03	-26223	13436	2185.96		32921	1.7701	14918	11882			0.88	No, Vu<V
SLV 2	0.37	-25804	13597	-1298.05		32395	1.7701	14812	11799			0.87	No, Vu<V
SLV 4	-0.03	-35290	10427	2425.18		44304	1.7701	16250	12944			1.24	Si
SLV 4	0.37	-34799	10594	-834.87		43688	1.7701	16250	12944			1.22	Si
SLV 6	-0.03	-9201	8532	-546.6		11551	1.7701	10644	8478			0.99	No, Vu<V
SLV 6	0.37	-8761	8547	-1928.7		10999	1.7701	10533	8390			0.98	No, Vu<V

Verifica a pressoflessione fuori piano D.M. 17-01-18 (N.T.C.)

quota -0.68 Wa 0.08 denominatore 8 γM = 2

Comb.	fd	Sa	σ0	N	M	Mc	Coeff.s.	Verifica
SLV 10	143750	0.24	3523	-2806	110.34	613.19	5.56	Si
SLV 9	143750	0.24	3523	-2806	110.34	613.19	5.56	Si
SLV 14	143750	0.24	6915	-5508	110.34	1169.17	10.6	Si
SLV 13	143750	0.24	6915	-5508	110.34	1169.17	10.6	Si
SLV 5	143750	0.24	11460	-9128	110.34	1861.17	16.87	Si
SLV 6	143750	0.24	11460	-9128	110.34	1861.17	16.87	Si
SLV 16	143750	0.24	17759	-14146	110.34	2720.17	24.65	Si
SLV 15	143750	0.24	17759	-14146	110.34	2720.17	24.65	Si
SLV 1	143750	0.24	33370	-26580	110.34	4347.25	39.4	Si
SLV 2	143750	0.24	33370	-26580	110.34	4347.25	39.4	Si

Verifica dei meccanismi locali di collasso con analisi cinematica lineare

forza di aggancio al piano = 0 quota mezzeria = -0.68 Wa = 0.08 Ta = 0.0271

Comb.	N top	N base	V orto	α0	M*	e*	a0*	aLim	Verifica
SLV 6	-6514	-10451	412	0.054	972.7	0.919	0.8484	3.33245	No
SLV 5	-6514	-10451	412	0.054	972.7	0.919	0.8484	3.33245	No
SLV 1	-22300	-31789	516	0.069	2573.2	0.965	1.03514	3.47592	No
SLV 2	-22300	-31789	516	0.069	2573.2	0.965	1.03514	3.47592	No
SLV 10	-1667	-1782	224	0.066	502.1	0.889	1.07649	3.33245	No
SLV 9	-1667	-1782	224	0.066	502.1	0.889	1.07649	3.33245	No
SLV 4	-30983	-41410	417	0.076	3457.2	0.973	1.12871	3.47592	No
SLV 3	-30983	-41410	417	0.076	3457.2	0.973	1.12871	3.47592	No
SLV 15	-14826	-12515	-210	0.08	1813.3	0.951	1.22861	3.47592	No
SLV 16	-14826	-12515	-210	0.08	1813.3	0.951	1.22861	3.47592	No

Tabella dei coefficienti di sicurezza minimi

Stato limite	Coeff.s.	Comb.	Verifica
PF_SLU	7.457	SLU 82	Si
V_SLU	22.212	SLU 38	Si
PF_SLV	1.182	SLV 9	Si
V_SLV	0.431	SLV 13	No
PFFP_SLV	5.557	SLV 9	Si
R_SLV	0.255	SLV 5	No

Maschio 3

Verifiche condotte secondo D.M. 17-01-18 (N.T.C.)

Dati geometrici

X ini.	Y ini.	X fin.	Y fin.	Quota i.	Quota.s	l	Sp.	h netta	h ini.	h fin.	a	a.s.,sx	a.s.,dx
-19.638	5.771	-21.883	5.771	L1	L3	2.244	0.45	2.7	2.7	2.7			

Caratteristiche del materiale

(Circolare 7 21-01-19 C8.5.I) Muratura in mattoni pieni e malta di calce LC2_Corti

fb	fk	fvk0	fmedio	τ0	fv0	μ	ϕ	fv,lim	E	G	FC
600000			345000	9000	20000	0.58	0.77	32500	320000000	128000000	1.2

Verifica a pressoflessione nel piano secondo D.M. 17-01-18 NTC §7.8.2.2.1 in combinazioni non sismiche, γM = 3

Comb.	Quota	N	M	σ0	Mu	c.s.	Verifica
SLU 79	-0.03	-46050	1874.39	45593	22753.48	12.139	Si
SLU 79	0.37	-45912	-547.25	45457	22771.67	41.611	Si
SLU 75	-0.03	-45731	1684.14	45278	22794.77	13.535	Si
SLU 75	0.37	-45615	-649.15	45163	22809.13	35.137	Si
SLU 84	-0.03	-47435	1807.19	46965	22541.63	12.473	Si
SLU 84	0.37	-47351	-600.69	46881	22556.01	37.55	Si
SLU 77	-0.03	-46368	1854.73	45908	22709.49	12.244	Si
SLU 77	0.37	-46239	-579.51	45781	22727.61	39.219	Si
SLU 80	-0.03	-45982	1838.01	45526	22762.52	12.384	Si
SLU 80	0.37	-45845	-572.9	45391	22780.32	39.763	Si
SLU 74	-0.03	-45799	1720.51	45345	22786.2	13.244	Si
SLU 74	0.37	-45682	-623.51	45229	22800.91	36.569	Si

Comb.	Quota	N	M	σ0	Mu	c.s.	Verifica
SLU 78	-0.03	-46300	1818.36	45841	22719.12	12.494	Si
SLU 78	0.37	-46172	-605.15	45714	22736.86	37.572	Si
SLU 81	-0.03	-46935	1709.34	46469	22624.2	13.236	Si
SLU 81	0.37	-46861	-619.04	46396	22635.82	36.566	Si
SLU 83	-0.03	-47503	1843.56	47032	22529.89	12.221	Si
SLU 83	0.37	-47418	-575.04	46948	22544.62	39.205	Si
SLU 82	-0.03	-46867	1672.97	46402	22634.88	13.53	Si
SLU 82	0.37	-46794	-644.69	46330	22646.2	35.127	Si

Verifica a pressoflessione nel piano secondo D.M. 17-01-18 NTC §7.8.2.2.1 in combinazioni sismiche, γM = 2

Comb.	Quota	N	M	σ0	Mu	c.s.	Verifica
SLV 1	-0.03	-36138	7840.19	35779	28679.45	3.658	Si
SLV 1	0.37	-33239	2187.84	32910	27255.3	12.458	Si
SLV 3	-0.03	-44212	8290.92	43774	31841.34	3.841	Si
SLV 3	0.37	-42070	1833.48	41653	31117.95	16.972	Si
SLV 6	-0.03	-20507	2418	20303	19189.32	7.936	Si
SLV 6	0.37	-18386	840.24	18204	17559.48	20.898	Si
SLV 15	-0.03	-26469	-5698.6	26206	23333.39	4.095	Si
SLV 15	0.37	-29068	-3197.99	28780	24937.6	7.798	Si
SLV 2	-0.03	-36138	7840.19	35779	28679.45	3.658	Si
SLV 2	0.37	-33239	2187.84	32910	27255.3	12.458	Si
SLV 14	-0.03	-18394	-6149.33	18212	17565.76	2.857	Si
SLV 14	0.37	-20237	-2843.64	20037	18986.82	6.677	Si
SLV 5	-0.03	-20507	2418	20303	19189.32	7.936	Si
SLV 5	0.37	-18386	840.24	18204	17559.48	20.898	Si
SLV 4	-0.03	-44212	8290.92	43774	31841.34	3.841	Si
SLV 4	0.37	-42070	1833.48	41653	31117.95	16.972	Si
SLV 16	-0.03	-26469	-5698.6	26206	23333.39	4.095	Si
SLV 16	0.37	-29068	-3197.99	28780	24937.6	7.798	Si
SLV 13	-0.03	-18394	-6149.33	18212	17565.76	2.857	Si
SLV 13	0.37	-20237	-2843.64	20037	18986.82	6.677	Si

Verifica a taglio nel piano secondo D.M. 17-01-18 (N.T.C.) §7.8.2.2.2 con rottura per scorrimento in combinazioni non sismiche, γM = 3

Comb.	Quota	N	V par	M	σ0	σN	I'	fvd	Vt scorr.	Vt fess.diag.	Vt,lim	c.s.	Verifica
SLU 69	-0.03	-41650	3488	1613.48		41237	2.2445	10833	10942			3.14	Si
SLU 69	0.37	-41426	3015	-617.33		41016	2.2445	10833	10942			3.63	Si
SLU 80	-0.03	-45982	3685	1838.01		45526	2.2445	10833	10942			2.97	Si
SLU 80	0.37	-45845	3168	-572.9		45391	2.2445	10833	10942			3.45	Si
SLU 74	-0.03	-45799	3466	1720.51		45345	2.2445	10833	10942			3.16	Si
SLU 74	0.37	-45682	2948	-623.51		45229	2.2445	10833	10942			3.71	Si
SLU 79	-0.03	-46050	3714	1874.39		45593	2.2445	10833	10942			2.95	Si
SLU 79	0.37	-45912	3196	-547.25		45457	2.2445	10833	10942			3.42	Si
SLU 70	-0.03	-41582	3459	1577.1		41170	2.2445	10833	10942			3.16	Si
SLU 70	0.37	-41359	2986	-642.98		40949	2.2445	10833	10942			3.66	Si
SLU 77	-0.03	-46368	3720	1854.73		45908	2.2445	10833	10942			2.94	Si
SLU 77	0.37	-46239	3197	-579.51		45781	2.2445	10833	10942			3.42	Si
SLU 78	-0.03	-46300	3691	1818.36		45841	2.2445	10833	10942			2.96	Si
SLU 78	0.37	-46172	3169	-605.15		45714	2.2445	10833	10942			3.45	Si
SLU 83	-0.03	-47503	3559	1843.56		47032	2.2445	10833	10942			3.07	Si
SLU 83	0.37	-47418	3025	-575.04		46948	2.2445	10833	10942			3.62	Si
SLU 71	-0.03	-41332	3482	1633.13		40922	2.2445	10833	10942			3.14	Si
SLU 71	0.37	-41099	3014	-585.08		40692	2.2445	10833	10942			3.63	Si
SLU 84	-0.03	-47435	3530	1807.19		46965	2.2445	10833	10942			3.1	Si
SLU 84	0.37	-47351	2996	-600.69		46881	2.2445	10833	10942			3.65	Si

Verifica a taglio nel piano secondo D.M. 17-01-18 (N.T.C.) §7.8.2.2.2 con rottura per scorrimento in combinazioni sismiche, γM = 2

Comb.	Quota	N	V par	M	σ0	σN	I'	fvd	Vt scorr.	Vt fess.diag.	Vt,lim	c.s.	Verifica
SLV 2	-0.03	-36138	17381	7840.19		35779	2.2445	15489	15644			0.9	No, Vu<V
SLV 2	0.37	-33239	15294	2187.84		32910	2.2445	14915	15065			0.98	No, Vu<V
SLV 14	-0.03	-18394	-17242	-6149.33		18212	2.2445	11976	12096			0.7	No, Vu<V
SLV 14	0.37	-20237	-18437	-2843.64		20037	2.2445	12341	12464			0.68	No, Vu<V
SLV 9	-0.03	-15184	-10288	-1778.86		15033	2.2445	11340	11454			1.11	Si
SLV 9	0.37	-14486	-14792	-669.2		14342	2.2445	11202	11314			0.76	No, Vu<V
SLV 13	-0.03	-18394	-17242	-6149.33		18212	2.2445	11976	12096			0.7	No, Vu<V
SLV 13	0.37	-20237	-18437	-2843.64		20037	2.2445	12341	12464			0.68	No, Vu<V
SLV 4	-0.03	-44212	21807	8290.92		43774	2.2445	16250	16413			0.75	No, Vu<V
SLV 4	0.37	-42070	22290	1833.48		41653	2.2445	16250	16413			0.74	No, Vu<V
SLV 8	-0.03	-47423	14854	3920.45		46953	2.2445	16250	16413			1.1	Si
SLV 8	0.37	-47822	18645	-340.95		47348	2.2445	16250	16413			0.88	No, Vu<V
SLV 10	-0.03	-15184	-10288	-1778.86		15033	2.2445	11340	11454			1.11	Si
SLV 10	0.37	-14486	-14792	-669.2		14342	2.2445	11202	11314			0.76	No, Vu<V
SLV 7	-0.03	-47423	14854	3920.45		46953	2.2445	16250	16413			1.1	Si
SLV 7	0.37	-47822	18645	-340.95		47348	2.2445	16250	16413			0.88	No, Vu<V
SLV 1	-0.03	-36138	17381	7840.19		35779	2.2445	15489	15644			0.9	No, Vu<V
SLV 1	0.37	-33239	15294	2187.84		32910	2.2445	14915	15065			0.98	No, Vu<V
SLV 3	-0.03	-44212	21807	8290.92		43774	2.2445	16250	16413			0.75	No, Vu<V
SLV 3	0.37	-42070	22290	1833.48		41653	2.2445	16250	16413			0.74	No, Vu<V

Verifica a pressoflessione fuori piano D.M. 17-01-18 (N.T.C.)

quota -0.68 Wa 0.08 denominatore 8 γM = 2

Comb.	fd	Sa	σ0	N	M	Mc	Coeff.s.	Verifica
SLV 10	143750	0.24	15764	-15921	139.91	3120.16	22.3	Si
SLV 9	143750	0.24	15764	-15921	139.91	3120.16	22.3	Si
SLV 5	143750	0.24	19162	-19354	139.91	3671.72	26.24	Si
SLV 6	143750	0.24	19162	-19354	139.91	3671.72	26.24	Si
SLV 13	143750	0.24	19511	-19707	139.91	3725.96	26.63	Si
SLV 14	143750	0.24	19511	-19707	139.91	3725.96	26.63	Si
SLV 16	143750	0.24	26122	-26384	139.91	4667.21	33.36	Si
SLV 15	143750	0.24	26122	-26384	139.91	4667.21	33.36	Si
SLV 2	143750	0.24	30840	-31148	139.91	5239.49	37.45	Si

Comb.	fd	Sa	σ0	N	M	Mc	Coeff.s.	Verifica
SLV 1	143750	0.24	30840	-31148	139.91	5239.49	37.45	Si

Verifica dei meccanismi locali di collasso con analisi cinematica lineare

forza di aggancio al piano = 0 quota mezzeria = -0.68 Wa = 0.08 Ta = 0.0271

Comb.	N top	N base	V orto	α0	M*	e*	a0*	aLim	Verifica
SLV 9	-11806	-18228	509	0.062	1590.6	0.933	0.96469	3.33245	No
SLV 10	-11806	-18228	509	0.062	1590.6	0.933	0.96469	3.33245	No
SLV 6	-16847	-19318	480	0.069	2101.1	0.947	1.05959	3.33245	No
SLV 5	-16847	-19318	480	0.069	2101.1	0.947	1.05959	3.33245	No
SLV 14	-16136	-24070	400	0.073	2029	0.946	1.11898	3.47592	No
SLV 13	-16136	-24070	400	0.073	2029	0.946	1.11898	3.47592	No
SLV 1	-32938	-27702	301	0.081	3737.4	0.969	1.20909	3.47592	No
SLV 2	-32938	-27702	301	0.081	3737.4	0.969	1.20909	3.47592	No
SLV 16	-24888	-30166	277	0.081	2918.2	0.961	1.22067	3.47592	No
SLV 15	-24888	-30166	277	0.081	2918.2	0.961	1.22067	3.47592	No

Tabella dei coefficienti di sicurezza minimi

Stato limite	Coeff.s.	Comb.	Verifica
PF_SLU	12.139	SLU 79	Si
V_SLU	2.941	SLU 77	Si
PF_SLV	2.857	SLV 13	Si
V_SLV	0.676	SLV 13	No
PFFP_SLV	22.301	SLV 9	Si
R_SLV	0.289	SLV 9	No

Maschio 4

Verifiche condotte secondo D.M. 17-01-18 (N.T.C.)

Dati geometrici

X ini.	Y ini.	X fin.	Y fin.	Quota i.	Quota.s	l	Sp.	h netta	h ini.	h fin.	a	a.s.,sx	a.s.,dx
-19.713	5.771	-19.713	6.483	L1	L3	0.712	0.45	2.7	2.7	2.7			

Caratteristiche del materiale

(Circolare 7 21-01-19 C8.5.I) Muratura in mattoni pieni e malta di calce LC2_Corti

fb	fk	fvk0	fmedio	τ0	fv0	μ	ϕ	fv,lim	E	G	FC
600000			345000	9000	20000	0.58	0.77	32500	320000000	128000000	1.2

Verifica a pressoflessione nel piano secondo D.M. 17-01-18 NTC §7.8.2.2.1 in combinazioni non sismiche, γM = 3

Comb.	Quota	N	M	σ0	Mu	c.s.	Verifica
SLU 75	-2.03	-16878	149.48	52660	2124.82	14.215	Si
SLU 75	0.67	-19102	9.75	59600	1825.33	187.299	Si
SLU 82	-2.03	-17303	155.67	53989	2077.94	13.348	Si
SLU 82	0.67	-19534	4.08	60949	1751.42	429.209	Si
SLU 78	-2.03	-17001	148.95	53047	2111.69	14.177	Si
SLU 78	0.67	-19297	15.5	60210	1792.55	115.638	Si
SLU 73	-2.03	-16635	149.95	51903	2149.32	14.333	Si
SLU 73	0.67	-18738	5.11	58464	1883.58	368.279	Si
SLU 83	-2.03	-17418	152.93	54345	2064.51	13.5	Si
SLU 83	0.67	-19730	9.14	61559	1716.36	187.73	Si
SLU 84	-2.03	-17427	155.15	54375	2063.37	13.299	Si
SLU 84	0.67	-19730	9.84	61559	1716.34	174.488	Si
SLU 81	-2.03	-17294	153.46	53959	2079.04	13.548	Si
SLU 81	0.67	-19534	3.39	60949	1751.44	517.135	Si
SLU 80	-2.03	-16876	147.43	52656	2124.95	14.413	Si
SLU 80	0.67	-19129	16.16	59684	1820.89	112.652	Si
SLU 77	-2.03	-16992	146.73	53017	2112.72	14.398	Si
SLU 77	0.67	-19297	14.81	60209	1792.58	121.057	Si
SLU 76	-2.03	-16759	149.43	52290	2137.01	14.301	Si
SLU 76	0.67	-18933	10.87	59074	1852.74	170.439	Si

Verifica a pressoflessione nel piano secondo D.M. 17-01-18 NTC §7.8.2.2.1 in combinazioni sismiche, γM = 2

Comb.	Quota	N	M	σ0	Mu	c.s.	Verifica
SLV 13	-2.03	-8046	452.69	25104	2276.55	5.029	Si
SLV 13	0.67	-9910	-781.3	30922	2636.06	3.374	Si
SLV 14	-2.03	-8046	452.69	25104	2276.55	5.029	Si
SLV 14	0.67	-9910	-781.3	30922	2636.06	3.374	Si
SLV 10	-2.03	-3272	-545.69	10209	1067.87	1.957	Si
SLV 10	0.67	-4558	-210.31	14222	1434.25	6.82	Si
SLV 12	-2.03	-19390	1107.81	60498	3486.07	3.147	Si
SLV 12	0.67	-21264	-257.06	66347	3460.62	13.462	Si
SLV 11	-2.03	-19390	1107.81	60498	3486.07	3.147	Si
SLV 11	0.67	-21264	-257.06	66347	3460.62	13.462	Si
SLV 9	-2.03	-3272	-545.69	10209	1067.87	1.957	Si
SLV 9	0.67	-4558	-210.31	14222	1434.25	6.82	Si
SLV 5	-2.03	-4016	-905.39	12529	1283.34	1.417	Si
SLV 5	0.67	-4982	265.09	15545	1548.5	5.841	Si
SLV 15	-2.03	-12881	948.74	40191	3078.28	3.245	Si
SLV 15	0.67	-14922	-795.33	46559	3289.08	4.135	Si
SLV 6	-2.03	-4016	-905.39	12529	1283.34	1.417	Si
SLV 6	0.67	-4982	265.09	15545	1548.5	5.841	Si
SLV 16	-2.03	-12881	948.74	40191	3078.28	3.245	Si
SLV 16	0.67	-14922	-795.33	46559	3289.08	4.135	Si

Verifica a taglio nel piano secondo D.M. 17-01-18 (N.T.C.) §7.8.2.2.2 con rottura per scorrimento in combinazioni non sismiche, γM = 3

Comb.	Quota	N	V par	M	σ0	σN	l'	fvd	Vt scorr.	Vt fess.diag.	Vt,lim	c.s.	Verifica
SLU 76	-2.03	-16759	-216	149.43		52290	0.7122	10833	3472			16.04	Si
SLU 76	0.67	-18933	900	10.87		59074	0.7122	10833	3472			3.86	Si
SLU 84	-2.03	-17427	-232	155.15		54375	0.7122	10833	3472			14.95	Si
SLU 84	0.67	-19730	926	9.84		61559	0.7122	10833	3472			3.75	Si
SLU 77	-2.03	-16992	-247	146.73		53017	0.7122	10833	3472			14.03	Si
SLU 77	0.67	-19297	893	14.81		60209	0.7122	10833	3472			3.89	Si
SLU 81	-2.03	-17294	-216	153.46		53959	0.7122	10833	3472			16.1	Si
SLU 81	0.67	-19534	935	3.39		60949	0.7122	10833	3472			3.71	Si
SLU 82	-2.03	-17303	-210	155.67		53989	0.7122	10833	3472			16.55	Si
SLU 82	0.67	-19534	939	4.08		60949	0.7122	10833	3472			3.7	Si
SLU 75	-2.03	-16878	-219	149.48		52660	0.7122	10833	3472			15.85	Si
SLU 75	0.67	-19102	910	9.75		59600	0.7122	10833	3472			3.81	Si
SLU 78	-2.03	-17001	-241	148.95		53047	0.7122	10833	3472			14.38	Si
SLU 78	0.67	-19297	897	15.5		60210	0.7122	10833	3472			3.87	Si
SLU 74	-2.03	-16868	-225	147.26		52630	0.7122	10833	3472			15.43	Si
SLU 74	0.67	-19102	906	9.05		59599	0.7122	10833	3472			3.83	Si
SLU 73	-2.03	-16635	-194	149.95		51903	0.7122	10833	3472			17.9	Si
SLU 73	0.67	-18738	913	5.11		58464	0.7122	10833	3472			3.8	Si
SLU 83	-2.03	-17418	-238	152.93		54345	0.7122	10833	3472			14.58	Si
SLU 83	0.67	-19730	922	9.14		61559	0.7122	10833	3472			3.77	Si

Verifica a taglio nel piano secondo D.M. 17-01-18 (N.T.C.) §7.8.2.2.2 con rottura per scorrimento in combinazioni sismiche, γM = 2

Comb.	Quota	N	V par	M	σ0	σN	l'	fvd	Vt scorr.	Vt fess.diag.	Vt,lim	c.s.	Verifica
SLV 16	-2.03	-12881	4006	948.74		40191	0.7122	16250	5208			1.3	Si
SLV 16	0.67	-14922	5771	-795.33		46559	0.7122	16250	5208			0.9	No, Vu<V
SLV 11	-2.03	-19390	4290	1107.81		60498	0.7122	16250	5208			1.21	Si
SLV 11	0.67	-21264	5866	-257.06		66347	0.7122	16250	5208			0.89	No, Vu<V
SLV 15	-2.03	-12881	4006	948.74		40191	0.7122	16250	5208			1.3	Si
SLV 15	0.67	-14922	5771	-795.33		46559	0.7122	16250	5208			0.9	No, Vu<V
SLV 1	-2.03	-10524	-4281	-746.32		32836	0.7122	14901	4776			1.12	Si
SLV 1	0.67	-11324	-4471	803.36		35333	0.7122	15400	4936			1.1	Si
SLV 12	-2.03	-19390	4290	1107.81		60498	0.7122	16250	5208			1.21	Si
SLV 12	0.67	-21264	5866	-257.06		66347	0.7122	16250	5208			0.89	No, Vu<V
SLV 10	-2.03	-3272	-2709	-545.69		12801	0.568	10894	2784			1.03	Si
SLV 10	0.67	-4558	-2222	-210.31		14222	0.7122	11178	3582			1.61	Si
SLV 6	-2.03	-4016	-4565	-905.39		22769	0.3919	12887	2273			0.5	No, Vu<V
SLV 6	0.67	-4982	-4567	265.09		15545	0.7122	11442	3667			0.8	No, Vu<V
SLV 5	-2.03	-4016	-4565	-905.39		22769	0.3919	12887	2273			0.5	No, Vu<V
SLV 5	0.67	-4982	-4567	265.09		15545	0.7122	11442	3667			0.8	No, Vu<V
SLV 9	-2.03	-3272	-2709	-545.69		12801	0.568	10894	2784			1.03	Si
SLV 9	0.67	-4558	-2222	-210.31		14222	0.7122	11178	3582			1.61	Si
SLV 2	-2.03	-10524	-4281	-746.32		32836	0.7122	14901	4776			1.12	Si
SLV 2	0.67	-11324	-4471	803.36		35333	0.7122	15400	4936			1.1	Si

Verifica a pressoflessione fuori piano D.M. 17-01-18 (N.T.C.)

quota -0.68 Wa 0.08 denominatore 8 γM = 2

Comb.	fd	Sa	σ0	N	M	Mc	Coeff.s.	Verifica
SLV 9	143750	0.24	10648	-3413	42.81	700.96	16.37	Si
SLV 10	143750	0.24	10648	-3413	42.81	700.96	16.37	Si
SLV 5	143750	0.24	12398	-3974	42.81	803.33	18.76	Si
SLV 6	143750	0.24	12398	-3974	42.81	803.33	18.76	Si
SLV 13	143750	0.24	24042	-7706	42.81	1392.6	32.53	Si
SLV 14	143750	0.24	24042	-7706	42.81	1392.6	32.53	Si
SLV 2	143750	0.24	29874	-9575	42.81	1627.58	38.02	Si
SLV 1	143750	0.24	29874	-9575	42.81	1627.58	38.02	Si
SLV 16	143750	0.24	37272	-11946	42.81	1867.9	43.63	Si
SLV 15	143750	0.24	37272	-11946	42.81	1867.9	43.63	Si

Verifica dei meccanismi locali di collasso con analisi cinematica lineare

forza di aggancio al piano = 0 quota mezzeria = -0.68 Wa = 0.08 Ta = 0.0271

Comb.	N top	N base	V orto	α0	M*	e*	a0*	aLim	Verifica
SLV 16	-14922	-12881	529	0.054	1641.2	0.977	0.79972	3.47592	No
SLV 15	-14922	-12881	529	0.054	1641.2	0.977	0.79972	3.47592	No
SLV 11	-21264	-19390	751	0.052	2287.4	0.983	0.77152	3.33245	No
SLV 12	-21264	-19390	751	0.052	2287.4	0.983	0.77152	3.33245	No
SLV 8	-21688	-20133	677	0.056	2330.6	0.984	0.82909	3.33245	No
SLV 7	-21688	-20133	677	0.056	2330.6	0.984	0.82909	3.33245	No
SLV 6	-4982	-4016	-207	0.059	629.8	0.945	0.90324	3.33245	No
SLV 5	-4982	-4016	-207	0.059	629.8	0.945	0.90324	3.33245	No
SLV 13	-9910	-8046	264	0.065	1130.8	0.967	0.97182	3.47592	No
SLV 14	-9910	-8046	264	0.065	1130.8	0.967	0.97182	3.47592	No

Tabella dei coefficienti di sicurezza minimi

Stato limite	Coeff.s.	Comb.	Verifica
PF_SLU	13.299	SLU 84	Si
V_SLU	3.697	SLU 82	Si
PF_SLV	1.417	SLV 5	Si
V_SLV	0.498	SLV 5	No
PFFP_SLV	16.373	SLV 9	Si
R_SLV	0.23	SLV 15	No

Maschio 5

Verifiche condotte secondo D.M. 17-01-18 (N.T.C.)

Dati geometrici

X ini.	Y ini.	X fin.	Y fin.	Quota i.	Quota.s	l	Sp.	h netta	h ini.	h fin.	a	a.s.,sx	a.s.,dx
-19.638	2.228	-19.638	5.996	L1	L3	3.768	0.3	2.7	2.7	2.7			

Caratteristiche del materiale

(Circolare 7 21-01-19 C8.5.I) Muratura in mattoni pieni e malta di calce LC2_Corti

fb	fk	fvk0	fmedio	τ0	fv0	μ	ϕ	fv,lim	E	G	FC
600000			345000	9000	20000	0.58	0.77	32500	320000000	128000000	1.2

Verifica a pressoflessione nel piano secondo D.M. 17-01-18 NTC §7.8.2.2.1 in combinazioni non sismiche, γM = 3

Comb.	Quota	N	M	σ0	Mu	c.s.	Verifica
SLU 80	-2.03	-31851	8646.81	28178	39247.41	4.539	Si
SLU 80	-0.03	-23441	1263.21	20738	32917.88	26.059	Si
SLU 83	-2.03	-32719	8977.32	28946	39736	4.426	Si
SLU 83	-0.03	-24141	1315.67	21357	33555.03	25.504	Si
SLU 82	-2.03	-32387	9086.9	28652	39552.5	4.353	Si
SLU 82	-0.03	-23822	1425.66	21075	33267.37	23.335	Si
SLU 84	-2.03	-32641	9083.89	28877	39693.05	4.37	Si
SLU 84	-0.03	-24074	1381.39	21298	33495.05	24.247	Si
SLU 78	-2.03	-32058	8736.63	28362	39366.81	4.506	Si
SLU 78	-0.03	-23622	1287.31	20898	33084.72	25.701	Si
SLU 75	-2.03	-31804	8739.64	28137	39220.21	4.488	Si
SLU 75	-0.03	-23370	1331.58	20675	32852.38	24.672	Si
SLU 73	-2.03	-31291	8723.88	27683	38915.71	4.461	Si
SLU 73	-0.03	-22893	1395.56	20253	32404.7	23.22	Si
SLU 74	-2.03	-31883	8633.08	28206	39265.85	4.548	Si
SLU 74	-0.03	-23437	1265.87	20735	32914.28	26.001	Si
SLU 81	-2.03	-32465	8980.34	28722	39596.27	4.409	Si
SLU 81	-0.03	-23889	1359.94	21134	33328.04	24.507	Si
SLU 76	-2.03	-31545	8720.87	27907	39067.64	4.48	Si
SLU 76	-0.03	-23145	1351.29	20476	32641.97	24.156	Si

Verifica a pressoflessione nel piano secondo D.M. 17-01-18 NTC §7.8.2.2.1 in combinazioni sismiche, γM = 2

Comb.	Quota	N	M	σ0	Mu	c.s.	Verifica
SLV 5	-2.03	-28447	-21261.64	25167	42552.85	2.001	Si
SLV 5	-0.03	-19283	-7338.35	17059	31255.33	4.259	Si
SLV 11	-2.03	-16496	33050.65	0	0	0	No, e>l/2
SLV 11	-0.03	-13212	9102.59	11689	22509.64	2.473	Si
SLV 6	-2.03	-28447	-21261.64	25167	42552.85	2.001	Si
SLV 6	-0.03	-19283	-7338.35	17059	31255.33	4.259	Si
SLV 8	-2.03	-11309	34840.06	0	0	0	No, e>l/2
SLV 8	-0.03	-11308	10472.63	10004	19559.37	1.868	Si
SLV 9	-2.03	-33634	-23051.05	29756	47932.69	2.079	Si
SLV 9	-0.03	-21187	-8708.39	18744	33791.35	3.88	Si
SLV 3	-2.03	-11255	17292.11	9957	19475.58	1.126	Si
SLV 3	-0.03	-11878	5837.17	10508	20452.47	3.504	Si
SLV 12	-2.03	-16496	33050.65	0	0	0	No, e>l/2
SLV 12	-0.03	-13212	9102.59	11689	22509.64	2.473	Si
SLV 7	-2.03	-11309	34840.06	0	0	0	No, e>l/2
SLV 7	-0.03	-11308	10472.63	10004	19559.37	1.868	Si
SLV 4	-2.03	-11255	17292.11	9957	19475.58	1.126	Si
SLV 4	-0.03	-11878	5837.17	10508	20452.47	3.504	Si
SLV 10	-2.03	-33634	-23051.05	29756	47932.69	2.079	Si
SLV 10	-0.03	-21187	-8708.39	18744	33791.35	3.88	Si

Verifica a taglio nel piano secondo D.M. 17-01-18 (N.T.C.) §7.8.2.2.2 con rottura per scorrimento in combinazioni non sismiche, γM = 3

Comb.	Quota	N	V par	M	σ0	σN	l'	fvd	Vt scorr.	Vt fess.diag.	Vt,lim	c.s.	Verifica
SLU 77	-2.03	-32137	481	8630.06		28431	3.7678	9346	10565			21.97	Si
SLU 77	-0.03	-23689	853	1221.6		20957	3.7678	8350	9438			11.06	Si
SLU 73	-2.03	-31291	498	8723.88		27683	3.7678	9247	10452			20.99	Si
SLU 73	-0.03	-22893	858	1395.56		20253	3.7678	8256	9332			10.88	Si
SLU 84	-2.03	-32641	518	9083.89		28877	3.7678	9406	10632			20.54	Si
SLU 84	-0.03	-24074	899	1381.39		21298	3.7678	8395	9490			10.56	Si
SLU 83	-2.03	-32719	487	8977.32		28946	3.7678	9415	10642			21.84	Si
SLU 83	-0.03	-24141	866	1315.67		21357	3.7678	8403	9498			10.96	Si
SLU 80	-2.03	-31851	504	8646.81		28178	3.7678	9313	10526			20.91	Si
SLU 80	-0.03	-23441	876	1263.21		20738	3.7678	8321	9405			10.74	Si
SLU 82	-2.03	-32387	505	9086.9		28652	3.7678	9376	10598			21	Si
SLU 82	-0.03	-23822	879	1425.66		21075	3.7678	8366	9456			10.76	Si
SLU 78	-2.03	-32058	511	8736.63		28362	3.7678	9337	10554			20.64	Si
SLU 78	-0.03	-23622	886	1287.31		20898	3.7678	8342	9429			10.64	Si
SLU 79	-2.03	-31930	473	8540.25		28248	3.7678	9322	10537			22.27	Si
SLU 79	-0.03	-23508	844	1197.49		20797	3.7678	8329	9414			11.16	Si
SLU 75	-2.03	-31804	498	8739.64		28137	3.7678	9307	10520			21.11	Si
SLU 75	-0.03	-23370	866	1331.58		20675	3.7678	8312	9396			10.85	Si
SLU 76	-2.03	-31545	511	8720.87		27907	3.7678	9277	10486			20.53	Si
SLU 76	-0.03	-23145	878	1351.29		20476	3.7678	8286	9366			10.67	Si

Verifica a taglio nel piano secondo D.M. 17-01-18 (N.T.C.) §7.8.2.2.2 con rottura per scorrimento in combinazioni sismiche, γM = 2

Comb.	Quota	N	V par	M	σ0	σN	l'	fvd	Vt scorr.	Vt fess.diag.	Vt,lim	c.s.	Verifica
SLV 10	-2.03	-33634	-16056	-23051.05		31180	3.5957	14569	15716			0.98	No, Vu<V
SLV 10	-0.03	-21187	-17044	-8708.39		18744	3.7678	12082	13657			0.8	No, Vu<V
SLV 6	-2.03	-28447	-14876	-21261.64		27812	3.4094	13896	14213			0.96	No, Vu<V
SLV 6	-0.03	-19283	-15345	-7338.35		17059	3.7678	11745	13276			0.87	No, Vu<V
SLV 8	-2.03	-11309	16657	34840.06		0	0	8333	0			0	No, Vu<V
SLV 8	-0.03	-11308	18145	10472.63		13118	2.8734	10957	9445			0.52	No, Vu<V
SLV 3	-2.03	-11255	6996	17292.11		35985	1.0426	15530	4857			0.69	No, Vu<V
SLV 3	-0.03	-11878	8405	5837.17		10508	3.7678	10435	11795			1.4	Si
SLV 12	-2.03	-16496	15478	33050.65		0	0	8333	0			0	No, Vu<V
SLV 12	-0.03	-13212	16446	9102.59		12285	3.5849	10790	11605			0.71	No, Vu<V

Comb.	Quota	N	V par	M	σ0	σN	l'	fvd	Vt scorr.	Vt fess.diag.	Vt,lim	c.s.	Verifica
SLV 5	-2.03	-28447	-14876	-21261.64		27812	3.4094	13896	14213			0.96	No, Vu<V
SLV 5	-0.03	-19283	-15345	-7338.35		17059	3.7678	11745	13276			0.87	No, Vu<V
SLV 11	-2.03	-16496	15478	33050.65		0	0	8333	0			0	No, Vu<V
SLV 11	-0.03	-13212	16446	9102.59		12285	3.5849	10790	11605			0.71	No, Vu<V
SLV 4	-2.03	-11255	6996	17292.11		35985	1.0426	15530	4857			0.69	No, Vu<V
SLV 4	-0.03	-11878	8405	5837.17		10508	3.7678	10435	11795			1.4	Si
SLV 7	-2.03	-11309	16657	34840.06		0	0	8333	0			0	No, Vu<V
SLV 7	-0.03	-11308	18145	10472.63		13118	2.8734	10957	9445			0.52	No, Vu<V
SLV 9	-2.03	-33634	-16056	-23051.05		31180	3.5957	14569	15716			0.98	No, Vu<V
SLV 9	-0.03	-21187	-17044	-8708.39		18744	3.7678	12082	13657			0.8	No, Vu<V

Verifica a pressoflessione fuori piano D.M. 17-01-18 (N.T.C.)

quota -0.68 Wa 0.05 denominatore 8 γM = 2

Comb.	fd	Sa	σ0	N	M	Mc	Coeff.s.	Verifica
SLV 4	143750	0.24	9109	-10296	150.99	1429.24	9.47	Si
SLV 3	143750	0.24	9109	-10296	150.99	1429.24	9.47	Si
SLV 7	143750	0.24	9750	-11021	150.99	1521.26	10.08	Si
SLV 8	143750	0.24	9750	-11021	150.99	1521.26	10.08	Si
SLV 2	143750	0.24	12337	-13945	150.99	1880.53	12.45	Si
SLV 1	143750	0.24	12337	-13945	150.99	1880.53	12.45	Si
SLV 11	143750	0.24	13529	-15292	150.99	2039.83	13.51	Si
SLV 12	143750	0.24	13529	-15292	150.99	2039.83	13.51	Si
SLV 6	143750	0.24	20511	-23185	150.99	2893.91	19.17	Si
SLV 5	143750	0.24	20511	-23185	150.99	2893.91	19.17	Si

Verifica dei meccanismi locali di collasso con analisi cinematica lineare

forza di aggancio al piano = 0 quota mezzeria = -0.68 Wa = 0.05 Ta = 0.0406

Comb.	N top	N base	V orto	α0	M*	e*	a0*	aLim	Verifica
SLV 15	-12504	-28546	503	0.033	1708.5	0.931	0.50868	4.36108	No
SLV 16	-12504	-28546	503	0.033	1708.5	0.931	0.50868	4.36108	No
SLV 13	-13782	-33688	528	0.033	1837.6	0.935	0.5106	4.36108	No
SLV 14	-13782	-33688	528	0.033	1837.6	0.935	0.5106	4.36108	No
SLV 9	-14185	-33634	481	0.036	1878.4	0.936	0.56162	4.07946	No
SLV 10	-14185	-33634	481	0.036	1878.4	0.936	0.56162	4.07946	No
SLV 11	-9926	-16496	397	0.036	1448.8	0.922	0.57157	4.07946	No
SLV 12	-9926	-16496	397	0.036	1448.8	0.922	0.57157	4.07946	No
SLV 6	-13253	-28447	415	0.039	1784.1	0.934	0.60939	4.07946	No
SLV 5	-13253	-28447	415	0.039	1784.1	0.934	0.60939	4.07946	No

Tabella dei coefficienti di sicurezza minimi

Stato limite	Coeff.s.	Comb.	Verifica
PF_SLU	4.353	SLU 82	Si
V_SLU	10.56	SLU 84	Si
PF_SLV	0	SLV 7	No
V_SLV	0	SLV 7	No
PFFP_SLV	9.466	SLV 3	Si
R_SLV	0.117	SLV 15	No

Maschio 6

Verifiche condotte secondo D.M. 17-01-18 (N.T.C.)

Dati geometrici

X ini.	Y ini.	X fin.	Y fin.	Quota i.	Quota.s	l	Sp.	h netta	h ini.	h fin.	a	a.s.,sx	a.s.,dx
-22.572	-3.32	-24.653	-3.32	L1	L3	2.081	0.45	2.7	2.7	2.7			

Caratteristiche del materiale

(Circolare 7 21-01-19 C8.5.I) Muratura in mattoni pieni e malta di calce LC2_Corti

fb	fk	fvk0	fmedio	τ0	fv0	μ	ϕ	fv,lim	E	G	FC
600000			345000	9000	20000	0.58	0.77	32500	320000000	128000000	1.2

Verifica a pressoflessione nel piano secondo D.M. 17-01-18 NTC §7.8.2.2.1 in combinazioni non sismiche, γM = 3

Comb.	Quota	N	M	σ0	Mu	c.s.	Verifica
SLU 71	-0.03	-24222	1786.77	25865	17201.64	9.627	Si
SLU 71	0.37	-22332	1192.75	23846	16434.89	13.779	Si
SLU 58	-0.03	-24571	1711.24	26237	17332.39	10.129	Si
SLU 58	0.37	-22691	1123.11	24229	16588.04	14.77	Si
SLU 69	-0.03	-24385	1807.83	26038	17262.88	9.549	Si
SLU 69	0.37	-22480	1212.97	24005	16498.62	13.602	Si
SLU 56	-0.03	-24733	1732.31	26410	17392.09	10.04	Si
SLU 56	0.37	-22839	1143.32	24388	16650.31	14.563	Si
SLU 43	-0.03	-21205	1605.27	22643	15931.53	9.925	Si
SLU 43	0.37	-19400	1123	20716	15053.33	13.405	Si
SLU 6	-0.03	-17648	1402.53	18845	14115.53	10.064	Si
SLU 6	0.37	-16212	954.42	17312	13284.65	13.919	Si
SLU 50	-0.03	-21719	1739.42	23192	16165.6	9.294	Si
SLU 50	0.37	-19900	1193.58	21249	15305.1	12.823	Si
SLU 48	-0.03	-21881	1760.49	23365	16237.92	9.224	Si
SLU 48	0.37	-20048	1213.79	21407	15378.69	12.67	Si
SLU 66	-0.03	-24127	1740.76	25763	17165.45	9.861	Si
SLU 66	0.37	-22231	1177.67	23738	16391.15	13.918	Si
SLU 45	-0.03	-21624	1693.41	23091	16122.92	9.521	Si
SLU 45	0.37	-19798	1178.5	21141	15254.66	12.944	Si

Verifica a pressoflessione nel piano secondo D.M. 17-01-18 NTC §7.8.2.2.1 in combinazioni sismiche, γM = 2

Comb.	Quota	N	M	σ0	Mu	c.s.	Verifica
SLV 13	-0.03	-13391	-4540.22	14299	12303.72	2.71	Si
SLV 13	0.37	-15229	-333.05	16262	13737.68	41.248	Si
SLV 12	-0.03	-3144	-3057.9	3357	3181.3	1.04	Si
SLV 12	0.37	2790	1124.54	0	0	0	No, Trazione
SLV 16	-0.03	-5781	-5956.43	6173	5711.87	0.959	No, M>Mu
SLV 16	0.37	-4606	16.04	4918	4599.69	286.808	Si
SLV 15	-0.03	-5781	-5956.43	6173	5711.87	0.959	No, M>Mu
SLV 15	0.37	-4606	16.04	4918	4599.69	286.808	Si
SLV 3	-0.03	-23612	7045.79	25213	19499.6	2.768	Si
SLV 3	0.37	-18886	2019.56	20166	16408.12	8.125	Si
SLV 14	-0.03	-13391	-4540.22	14299	12303.72	2.71	Si
SLV 14	0.37	-15229	-333.05	16262	13737.68	41.248	Si
SLV 7	-0.03	-8493	842.76	9069	8181.35	9.708	Si
SLV 7	0.37	-1494	1725.59	0	0	0	No, e>l/2
SLV 8	-0.03	-8493	842.76	9069	8181.35	9.708	Si
SLV 8	0.37	-1494	1725.59	0	0	0	No, e>l/2
SLV 11	-0.03	-3144	-3057.9	3357	3181.3	1.04	Si
SLV 11	0.37	2790	1124.54	0	0	0	No, Trazione
SLV 4	-0.03	-23612	7045.79	25213	19499.6	2.768	Si
SLV 4	0.37	-18886	2019.56	20166	16408.12	8.125	Si

Verifica a taglio nel piano secondo D.M. 17-01-18 (N.T.C.) §7.8.2.2.2 con rottura per scorrimento in combinazioni non sismiche, γM = 3

Comb.	Quota	N	V par	M	σ0	σN	l'	fvd	Vt scorr.	Vt fess.diag.	Vt,lim	c.s.	Verifica
SLU 2	-0.03	-19228	1410	686.71		20532	2.0811	8293	7767			5.51	Si
SLU 2	0.37	-18144	1305	-321.07		19375	2.0811	8139	7622			5.84	Si
SLU 66	-0.03	-24127	-1303	1740.76		25763	2.0811	8991	8420			6.46	Si
SLU 66	0.37	-22231	-1425	1177.67		23738	2.0811	8721	8167			5.73	Si
SLU 26	-0.03	-21988	1409	801.14		23479	2.0811	8686	8135			5.77	Si
SLU 26	0.37	-20826	1292	-286.61		22238	2.0811	8521	7980			6.18	Si
SLU 74	-0.03	-26979	-1351	1712.58		28809	2.0811	9397	8800			6.51	Si
SLU 74	0.37	-25022	-1485	1107.2		26719	2.0811	9118	8539			5.75	Si
SLU 81	-0.03	-27782	-1399	1612.36		29666	2.0811	9511	8907			6.37	Si
SLU 81	0.37	-25820	-1534	1021.49		27571	2.0811	9232	8645			5.64	Si
SLU 5	-0.03	-19485	1470	753.79		20806	2.0811	8330	7801			5.31	Si
SLU 5	0.37	-18394	1363	-285.78		19641	2.0811	8174	7655			5.61	Si
SLU 60	-0.03	-25279	-1338	1565.01		26993	2.0811	9155	8573			6.41	Si
SLU 60	0.37	-23388	-1462	1022.32		24974	2.0811	8885	8321			5.69	Si
SLU 43	-0.03	-21205	-1269	1605.27		22643	2.0811	8575	8030			6.33	Si
SLU 43	0.37	-19400	-1377	1123		20716	2.0811	8318	7789			5.66	Si
SLU 64	-0.03	-23708	-1330	1652.61		25316	2.0811	8931	8364			6.29	Si
SLU 64	0.37	-21833	-1449	1122.17		23313	2.0811	8664	8114			5.6	Si
SLU 13	-0.03	-22337	1422	725.61		23852	2.0811	8736	8181			5.75	Si
SLU 13	0.37	-21185	1304	-356.25		22622	2.0811	8572	8027			6.16	Si

Verifica a taglio nel piano secondo D.M. 17-01-18 (N.T.C.) §7.8.2.2.2 con rottura per scorrimento in combinazioni sismiche, γM = 2

Comb.	Quota	N	V par	M	σ0	σN	l'	fvd	Vt scorr.	Vt fess.diag.	Vt,lim	c.s.	Verifica
SLV 8	-0.03	-8493	-776	842.76		9069	2.0811	10147	9503			12.25	Si
SLV 8	0.37	-1494	-386	1725.59		0	0	8333	0			0	No, Vu<V
SLV 11	-0.03	-3144	-8833	-3057.9		34326	0.2035	15199	1392			0.16	No, Vu<V
SLV 11	0.37	2790	-8739	1124.54		0	0	8333	0			0	No, Vu<V
SLV 3	-0.03	-23612	11271	7045.79		25213	2.0811	13376	12527			1.11	Si
SLV 3	0.37	-18886	11771	2019.56		20166	2.0811	12367	11581			0.98	No, Vu<V
SLV 16	-0.03	-5781	-15587	-5956.43		416926	0.0308	16250	225			0.01	No, Vu<V
SLV 16	0.37	-4606	-16071	16.04		4918	2.0811	9317	8725			0.54	No, Vu<V
SLV 4	-0.03	-23612	11271	7045.79		25213	2.0811	13376	12527			1.11	Si
SLV 4	0.37	-18886	11771	2019.56		20166	2.0811	12367	11581			0.98	No, Vu<V
SLV 12	-0.03	-3144	-8833	-3057.9		34326	0.2035	15199	1392			0.16	No, Vu<V
SLV 12	0.37	2790	-8739	1124.54		0	0	8333	0			0	No, Vu<V
SLV 14	-0.03	-13391	-13318	-4540.22		14299	2.0811	11193	10482			0.79	No, Vu<V
SLV 14	0.37	-15229	-14003	-333.05		16262	2.0811	11586	10850			0.77	No, Vu<V
SLV 15	-0.03	-5781	-15587	-5956.43		416926	0.0308	16250	225			0.01	No, Vu<V
SLV 15	0.37	-4606	-16071	16.04		4918	2.0811	9317	8725			0.54	No, Vu<V
SLV 7	-0.03	-8493	-776	842.76		9069	2.0811	10147	9503			12.25	Si
SLV 7	0.37	-1494	-386	1725.59		0	0	8333	0			0	No, Vu<V
SLV 13	-0.03	-13391	-13318	-4540.22		14299	2.0811	11193	10482			0.79	No, Vu<V
SLV 13	0.37	-15229	-14003	-333.05		16262	2.0811	11586	10850			0.77	No, Vu<V

Verifica a pressoflessione fuori piano D.M. 17-01-18 (N.T.C.)

quota -0.68 Wa 0.08 denominatore 8 γM = 2

Comb.	fd	Sa	σ0	N	M	Mc	Coeff.s.	Verifica
SLV 11	143750	0.24	2619	-2453	125.1	540.13	4.32	Si
SLV 12	143750	0.24	2619	-2453	125.1	540.13	4.32	Si
SLV 15	143750	0.24	4478	-4194	125.1	909.03	7.27	Si
SLV 16	143750	0.24	4478	-4194	125.1	909.03	7.27	Si
SLV 8	143750	0.24	9631	-9019	125.1	1869.33	14.94	Si
SLV 7	143750	0.24	9631	-9019	125.1	1869.33	14.94	Si
SLV 13	143750	0.24	13082	-12252	125.1	2461.48	19.68	Si
SLV 14	143750	0.24	13082	-12252	125.1	2461.48	19.68	Si
SLV 4	143750	0.24	27848	-26080	125.1	4530.59	36.22	Si
SLV 3	143750	0.24	27848	-26080	125.1	4530.59	36.22	Si

Verifica dei meccanismi locali di collasso con analisi cinematica lineare

forza di aggancio al piano = 0 quota mezzeria = -0.68 Wa = 0.08 Ta = 0.0271

Comb.	N top	N base	V orto	α0	M*	e*	a0*	aLim	Verifica
SLV 16	-3136	-5482	-853	0	698.5	0.891	0	3.47592	No
SLV 9	-28167	-36181	3126	0	3223.7	0.967	0	3.33245	No
SLV 8	-1425	-11447	-2254	0	544.7	0.894	0	3.33245	No
SLV 5	-32377	-44230	3391	0	3652.3	0.97	0	3.33245	No

Comb.	N top	N base	V orto	α0	M*	e*	a0*	aLim	Verifica
SLV 15	-3136	-5482	-853	0	698.5	0.891	0	3.47592	No
SLV 6	-32377	-44230	3391	0	3652.3	0.97	0	3.33245	No
SLV 10	-28167	-36181	3126	0	3223.7	0.967	0	3.33245	No
SLV 11	2785	-3398	-2519	0	0	0	0	3.33245	No, Trazione
SLV 12	2785	-3398	-2519	0	0	0	0	3.33245	No, Trazione
SLV 7	-1425	-11447	-2254	0	544.7	0.894	0	3.33245	No

Tabella dei coefficienti di sicurezza minimi

Stato limite	Coeff.s.	Comb.	Verifica
PF_SLU	9.224	SLU 48	Si
V_SLU	5.307	SLU 5	Si
PF_SLV	0	SLV 12	No
V_SLV	0	SLV 7	No
PFFP_SLV	4.318	SLV 11	Si
R_SLV	0	SLV 12	No

Maschio 7

Verifiche condotte secondo D.M. 17-01-18 (N.T.C.)

Dati geometrici

X ini.	Y ini.	X fin.	Y fin.	Quota i.	Quota.s	l	Sp.	h netta	h ini.	h fin.	a	a.s.,sx	a.s.,dx
-18.272	-3.32	-21.572	-3.32	L1	L3	3.3	0.45	2.7	2.7	2.7			

Caratteristiche del materiale

(Circolare 7 21-01-19 C8.5.I) Muratura in mattoni pieni e malta di calce LC2_Corti

fb	fk	fvk0	fmedio	τ0	fv0	μ	ϕ	fv,lim	E	G	FC
600000			345000	9000	20000	0.58	0.77	32500	320000000	128000000	1.2

Verifica a pressoflessione nel piano secondo D.M. 17-01-18 NTC §7.8.2.2.1 in combinazioni non sismiche, γM = 3

Comb.	Quota	N	M	σ0	Mu	c.s.	Verifica
SLU 79	-0.03	-42437	-7624.03	28577	45456.83	5.962	Si
SLU 79	0.37	-41044	-8867.31	27639	44744.5	5.046	Si
SLU 77	-0.03	-42644	-7681.14	28716	45557.78	5.931	Si
SLU 77	0.37	-41251	-8921.19	27778	44853.29	5.028	Si
SLU 83	-0.03	-44071	-7855.78	29677	46224.48	5.884	Si
SLU 83	0.37	-42678	-9048.68	28739	45574.23	5.037	Si
SLU 69	-0.03	-37952	-7079.33	25557	42974.19	6.07	Si
SLU 69	0.37	-36559	-8251.75	24619	42091.37	5.101	Si
SLU 56	-0.03	-38635	-7120.85	26017	43387.66	6.093	Si
SLU 56	0.37	-37242	-8282.3	25079	42530.81	5.135	Si
SLU 81	-0.03	-43693	-7829.6	29423	46053.52	5.882	Si
SLU 81	0.37	-42300	-8943.14	28485	45388.91	5.075	Si
SLU 71	-0.03	-37746	-7022.23	25418	42846.83	6.102	Si
SLU 71	0.37	-36352	-8197.87	24480	41956.18	5.118	Si
SLU 58	-0.03	-38429	-7063.74	25878	43264.15	6.125	Si
SLU 58	0.37	-37036	-8228.42	24940	42399.46	5.153	Si
SLU 66	-0.03	-37574	-7053.16	25303	42740.21	6.06	Si
SLU 66	0.37	-36181	-8146.21	24364	41843.04	5.137	Si
SLU 74	-0.03	-42266	-7654.97	28462	45372.12	5.927	Si
SLU 74	0.37	-40873	-8815.65	27524	44653.28	5.065	Si

Verifica a pressoflessione nel piano secondo D.M. 17-01-18 NTC §7.8.2.2.1 in combinazioni sismiche, γM = 2

Comb.	Quota	N	M	σ0	Mu	c.s.	Verifica
SLV 15	-0.03	-21712	-15886.23	14621	31537.69	1.985	Si
SLV 15	0.37	-18572	-6474.83	12506	27507.32	4.248	Si
SLV 16	-0.03	-21712	-15886.23	14621	31537.69	1.985	Si
SLV 16	0.37	-18572	-6474.83	12506	27507.32	4.248	Si
SLV 7	-0.03	-10194	1496.05	6864	15874.88	10.611	Si
SLV 7	0.37	-2129	-2932.78	1434	3472.03	1.184	Si
SLV 14	-0.03	-33206	-17957.88	22361	44762.82	2.493	Si
SLV 14	0.37	-34257	-8224.01	23068	45852.34	5.575	Si
SLV 11	-0.03	-9321	-5411.04	6277	14589.16	2.696	Si
SLV 11	0.37	-1273	-3625.71	0	0	0	No, e>l/2
SLV 9	-0.03	-47634	-12316.54	32077	57963.13	4.706	Si
SLV 9	0.37	-53555	-9456.31	36064	62284.68	6.587	Si
SLV 13	-0.03	-33206	-17957.88	22361	44762.82	2.493	Si
SLV 13	0.37	-34257	-8224.01	23068	45852.34	5.575	Si
SLV 12	-0.03	-9321	-5411.04	6277	14589.16	2.696	Si
SLV 12	0.37	-1273	-3625.71	0	0	0	No, e>l/2
SLV 10	-0.03	-47634	-12316.54	32077	57963.13	4.706	Si
SLV 10	0.37	-53555	-9456.31	36064	62284.68	6.587	Si
SLV 8	-0.03	-10194	1496.05	6864	15874.88	10.611	Si
SLV 8	0.37	-2129	-2932.78	1434	3472.03	1.184	Si

Verifica a taglio nel piano secondo D.M. 17-01-18 (N.T.C.) §7.8.2.2.2 con rottura per scorrimento in combinazioni non sismiche, γM = 3

Comb.	Quota	N	V par	M	σ0	σN	l'	fvd	Vt scorr.	Vt fess.diag.	Vt,lim	c.s.	Verifica
SLU 48	-0.03	-33943	3280	-6519.04		22857	3.3	8603	12776			3.9	Si
SLU 48	0.37	-32550	3280	-7612.86		21919	3.3	8478	12590			3.84	Si
SLU 74	-0.03	-42266	3447	-7654.97		28462	3.3	9350	13886			4.03	Si
SLU 74	0.37	-40873	3447	-8815.65		27524	3.3	9225	13700			3.97	Si
SLU 50	-0.03	-33737	3288	-6461.93		22718	3.3	8585	12748			3.88	Si
SLU 50	0.37	-32344	3288	-7558.98		21780	3.3	8460	12563			3.82	Si
SLU 79	-0.03	-42437	3654	-7624.03		28577	3.3	9366	13908			3.81	Si
SLU 79	0.37	-41044	3654	-8867.31		27639	3.3	9241	13723			3.76	Si
SLU 71	-0.03	-37746	3484	-7022.23		25418	3.3	8945	13283			3.81	Si
SLU 71	0.37	-36352	3484	-8197.87		24480	3.3	8820	13097			3.76	Si

Comb.	Quota	N	V par	M	σ0	σN	l'	fvd	Vt scorr.	Vt fess.diag.	Vt,lim	c.s.	Verifica
SLU 58	-0.03	-38429	3457	-7063.74		25878	3.3	9006	13374			3.87	Si
SLU 58	0.37	-37036	3457	-8228.42		24940	3.3	8881	13188			3.81	Si
SLU 77	-0.03	-42644	3645	-7681.14		28716	3.3	9384	13936			3.82	Si
SLU 77	0.37	-41251	3645	-8921.19		27778	3.3	9259	13750			3.77	Si
SLU 83	-0.03	-44071	3528	-7855.78		29677	3.3	9513	14126			4	Si
SLU 83	0.37	-42678	3528	-9048.68		28739	3.3	9387	13940			3.95	Si
SLU 56	-0.03	-38635	3449	-7120.85		26017	3.3	9024	13401			3.89	Si
SLU 56	0.37	-37242	3449	-8282.3		25079	3.3	8899	13216			3.83	Si
SLU 69	-0.03	-37952	3476	-7079.33		25557	3.3	8963	13310			3.83	Si
SLU 69	0.37	-36559	3476	-8251.75		24619	3.3	8838	13125			3.78	Si

Verifica a taglio nel piano secondo D.M. 17-01-18 (N.T.C.) §7.8.2.2.2 con rottura per scorrimento in combinazioni sismiche, γM = 2

Comb.	Quota	N	V par	M	σ0	σN	l'	fvd	Vt scorr.	Vt fess.diag.	Vt,lim	c.s.	Verifica
SLV 8	-0.03	-10194	7462	1496.05		6864	3.3	9706	14414			1.93	Si
SLV 8	0.37	-2129	12128	-2932.78		5785	0.8179	9490	3493			0.29	No, Vu<V
SLV 3	-0.03	-24622	27313	7137.38		16580	3.3	11649	17299			0.63	No, Vu<V
SLV 3	0.37	-21428	28769	-4165.07		14429	3.3	11219	16661			0.58	No, Vu<V
SLV 11	-0.03	-9321	-7972	-5411.04		6456	3.2084	9624	13896			1.74	Si
SLV 11	0.37	-1273	-3343	-3625.71		0	0	8333	0			0	No, Vu<V
SLV 2	-0.03	-36116	28894	5065.73		24320	3.3	13197	19598			0.68	No, Vu<V
SLV 2	0.37	-37112	27562	-5914.25		24991	3.3	13332	19798			0.72	No, Vu<V
SLV 1	-0.03	-36116	28894	5065.73		24320	3.3	13197	19598			0.68	No, Vu<V
SLV 1	0.37	-37112	27562	-5914.25		24991	3.3	13332	19798			0.72	No, Vu<V
SLV 15	-0.03	-21712	-24134	-15886.23		17513	2.7549	11836	14673			0.61	No, Vu<V
SLV 15	0.37	-18572	-22801	-6474.83		12506	3.3	10835	16089			0.71	No, Vu<V
SLV 4	-0.03	-24622	27313	7137.38		16580	3.3	11649	17299			0.63	No, Vu<V
SLV 4	0.37	-21428	28769	-4165.07		14429	3.3	11219	16661			0.58	No, Vu<V
SLV 12	-0.03	-9321	-7972	-5411.04		6456	3.2084	9624	13896			1.74	Si
SLV 12	0.37	-1273	-3343	-3625.71		0	0	8333	0			0	No, Vu<V
SLV 7	-0.03	-10194	7462	1496.05		6864	3.3	9706	14414			1.93	Si
SLV 7	0.37	-2129	12128	-2932.78		5785	0.8179	9490	3493			0.29	No, Vu<V
SLV 16	-0.03	-21712	-24134	-15886.23		17513	2.7549	11836	14673			0.61	No, Vu<V
SLV 16	0.37	-18572	-22801	-6474.83		12506	3.3	10835	16089			0.71	No, Vu<V

Verifica a pressoflessione fuori piano D.M. 17-01-18 (N.T.C.)

quota -0.68 Wa 0.08 denominatore 8 γM = 2

Comb.	fd	Sa	σ0	N	M	Mc	Coeff.s.	Verifica
SLV 12	143750	0.24	7656	-11370	198.37	2397.87	12.09	Si
SLV 11	143750	0.24	7656	-11370	198.37	2397.87	12.09	Si
SLV 8	143750	0.24	8920	-13247	198.37	2762.97	13.93	Si
SLV 7	143750	0.24	8920	-13247	198.37	2762.97	13.93	Si
SLV 16	143750	0.24	12135	-18021	198.37	3651.98	18.41	Si
SLV 15	143750	0.24	12135	-18021	198.37	3651.98	18.41	Si
SLV 3	143750	0.24	16349	-24279	198.37	4731.76	23.85	Si
SLV 4	143750	0.24	16349	-24279	198.37	4731.76	23.85	Si
SLV 14	143750	0.24	17238	-25599	198.37	4947.2	24.94	Si
SLV 13	143750	0.24	17238	-25599	198.37	4947.2	24.94	Si

Verifica dei meccanismi locali di collasso con analisi cinematica lineare

forza di aggancio al piano = 0 quota mezzeria = -0.68 Wa = 0.08 Ta = 0.0271

Comb.	N top	N base	V orto	α0	M*	e*	a0*	aLim	Verifica
SLV 3	-15512	-25399	-2159	0	2152.2	0.929	0	3.47592	No
SLV 5	-51797	-36967	8409	0	5837.9	0.97	0	3.33245	No
SLV 8	5386	-16389	-7757	0	0	0	0	3.33245	No, Trazione
SLV 4	-15512	-25399	-2159	0	2152.2	0.929	0	3.47592	No
SLV 10	-51039	-35417	8461	0	5760.8	0.97	0	3.33245	No
SLV 12	6144	-14840	-7706	0	0	0	0	3.33245	No, Trazione
SLV 7	5386	-16389	-7757	0	0	0	0	3.33245	No, Trazione
SLV 6	-51797	-36967	8409	0	5837.9	0.97	0	3.33245	No
SLV 11	6144	-14840	-7706	0	0	0	0	3.33245	No, Trazione
SLV 9	-51039	-35417	8461	0	5760.8	0.97	0	3.33245	No

Tabella dei coefficienti di sicurezza minimi

Stato limite	Coeff.s.	Comb.	Verifica
PF_SLU	5.028	SLU 77	Si
V_SLU	3.756	SLU 79	Si
PF_SLV	0	SLV 11	No
V_SLV	0	SLV 11	No
PFFP_SLV	12.088	SLV 11	Si
R_SLV	0	SLV 12	No

Maschio 8

Verifiche condotte secondo D.M. 17-01-18 (N.T.C.)

Dati geometrici

X ini.	Y ini.	X fin.	Y fin.	Quota i.	Quota.s	l	Sp.	h netta	h ini.	h fin.	a	a.s.,sx	a.s.,dx
-16.523	-3.32	-17.272	-3.32	L1	L3	0.749	0.45	2.7	2.7	2.7			

Caratteristiche del materiale

(Circolare 7 21-01-19 C8.5.I) Muratura in mattoni pieni e malta di calce LC2_Corti

fb	fk	fvk0	fmedio	τ0	fv0	μ	ϕ	fv,lim	E	G	FC
600000			345000	9000	20000	0.58	0.77	32500	320000000	128000000	1.2

Verifica a pressoflessione nel piano secondo D.M. 17-01-18 NTC §7.8.2.2.1 in combinazioni non sismiche, γM = 3

Comb.	Quota	N	M	σ0	Mu	c.s.	Verifica
SLU 82	-0.03	-20713	1939.47	61451	1905.27	0.982	No, M>Mu
SLU 82	0.37	-20544	3121.07	60950	1937.04	0.621	No, M>Mu
SLU 83	-0.03	-20821	1901.19	61772	1884.51	0.991	No, M>Mu
SLU 83	0.37	-20710	3139.28	61442	1905.84	0.607	No, M>Mu
SLU 79	-0.03	-20102	1851.94	59638	2016.66	1.089	Si
SLU 79	0.37	-20002	3036.29	59341	2033.88	0.67	No, M>Mu
SLU 80	-0.03	-20194	1914.65	59910	2000.55	1.045	Si
SLU 80	0.37	-20036	3047.43	59442	2028.03	0.665	No, M>Mu
SLU 75	-0.03	-20086	1899.74	59590	2019.43	1.063	Si
SLU 75	0.37	-19935	3034.35	59143	2045.24	0.674	No, M>Mu
SLU 78	-0.03	-20286	1924.15	60184	1984.18	1.031	Si
SLU 78	0.37	-20135	3063.7	59736	2010.85	0.656	No, M>Mu
SLU 74	-0.03	-19994	1837.03	59317	2035.27	1.108	Si
SLU 74	0.37	-19901	3023.22	59042	2050.99	0.678	No, M>Mu
SLU 81	-0.03	-20621	1876.77	61178	1922.68	1.024	Si
SLU 81	0.37	-20510	3109.93	60849	1943.37	0.625	No, M>Mu
SLU 77	-0.03	-20194	1861.45	59911	2000.52	1.075	Si
SLU 77	0.37	-20101	3052.56	59635	2016.79	0.661	No, M>Mu
SLU 84	-0.03	-20913	1963.89	62045	1866.59	0.95	No, M>Mu
SLU 84	0.37	-20744	3150.41	61543	1899.34	0.603	No, M>Mu

Verifica a pressoflessione nel piano secondo D.M. 17-01-18 NTC §7.8.2.2.1 in combinazioni sismiche, γM = 2

Comb.	Quota	N	M	σ0	Mu	c.s.	Verifica
SLV 12	-0.03	-7098	259.85	21058	2200.12	8.467	Si
SLV 12	0.37	-7069	1314.92	20972	2192.96	1.668	Si
SLV 5	-0.03	-20338	2281	60340	3855.48	1.69	Si
SLV 5	0.37	-20243	2849.41	60057	3854.95	1.353	Si
SLV 9	-0.03	-19840	1936.65	58862	3850.92	1.988	Si
SLV 9	0.37	-21074	3227.73	62521	3853.96	1.194	Si
SLV 10	-0.03	-19840	1936.65	58862	3850.92	1.988	Si
SLV 10	0.37	-21074	3227.73	62521	3853.96	1.194	Si
SLV 13	-0.03	-14799	948.02	43906	3550.86	3.746	Si
SLV 13	0.37	-17141	2999.63	50854	3747.74	1.249	Si
SLV 15	-0.03	-10976	444.98	32565	3015.21	6.776	Si
SLV 15	0.37	-12940	2425.79	38389	3323.49	1.37	Si
SLV 6	-0.03	-20338	2281	60340	3855.48	1.69	Si
SLV 6	0.37	-20243	2849.41	60057	3854.95	1.353	Si
SLV 16	-0.03	-10976	444.98	32565	3015.21	6.776	Si
SLV 16	0.37	-12940	2425.79	38389	3323.49	1.37	Si
SLV 11	-0.03	-7098	259.85	21058	2200.12	8.467	Si
SLV 11	0.37	-7069	1314.92	20972	2192.96	1.668	Si
SLV 14	-0.03	-14799	948.02	43906	3550.86	3.746	Si
SLV 14	0.37	-17141	2999.63	50854	3747.74	1.249	Si

Verifica a taglio nel piano secondo D.M. 17-01-18 (N.T.C.) §7.8.2.2.2 con rottura per scorrimento in combinazioni non sismiche, γM = 3

Comb.	Quota	N	V par	M	σ0	σN	I'	fvd	Vt scorr.	Vt fess.diag.	Vt,lim	c.s.	Verifica
SLU 60	-0.03	-18804	-1151	1724.5		55789	0.749	10833	3652			3.17	Si
SLU 60	0.37	-18698	-303	2841.51		62237	0.6676	10833	3255			10.74	Si
SLU 83	-0.03	-20821	-1248	1901.19		61772	0.749	10833	3652			2.93	Si
SLU 83	0.37	-20710	-299	3139.28		68814	0.6688	10833	3260			10.92	Si
SLU 79	-0.03	-20102	-1206	1851.94		59638	0.749	10833	3652			3.03	Si
SLU 79	0.37	-20002	-302	3036.29		66526	0.6681	10833	3257			10.8	Si
SLU 69	-0.03	-18048	-1136	1689.56		53545	0.749	10833	3652			3.22	Si
SLU 69	0.37	-17982	-326	2743.78		60019	0.6658	10833	3246			9.97	Si
SLU 81	-0.03	-20621	-1253	1876.77		61178	0.749	10833	3652			2.91	Si
SLU 81	0.37	-20510	-302	3109.93		68164	0.6687	10833	3260			10.79	Si
SLU 62	-0.03	-19005	-1146	1748.91		56383	0.749	10833	3652			3.19	Si
SLU 62	0.37	-18898	-300	2870.86		62887	0.6678	10833	3256			10.86	Si
SLU 77	-0.03	-20194	-1223	1861.45		59911	0.749	10833	3652			2.98	Si
SLU 77	0.37	-20101	-310	3052.56		66874	0.668	10833	3256			10.5	Si
SLU 66	-0.03	-17848	-1140	1665.14		52951	0.749	10833	3652			3.2	Si
SLU 66	0.37	-17782	-329	2714.43		59370	0.6656	10833	3245			9.86	Si
SLU 74	-0.03	-19994	-1228	1837.03		59317	0.749	10833	3652			2.97	Si
SLU 74	0.37	-19901	-314	3023.22		66224	0.6678	10833	3256			10.38	Si
SLU 64	-0.03	-17556	-1128	1631.21		52084	0.749	10833	3652			3.24	Si
SLU 64	0.37	-17483	-324	2668.81		58372	0.6656	10833	3245			10.01	Si

Verifica a taglio nel piano secondo D.M. 17-01-18 (N.T.C.) §7.8.2.2.2 con rottura per scorrimento in combinazioni sismiche, γM = 2

Comb.	Quota	N	V par	M	σ0	σN	I'	fvd	Vt scorr.	Vt fess.diag.	Vt,lim	c.s.	Verifica
SLV 13	-0.03	-14799	-6011	948.02		43906	0.749	16250	5477			0.91	No, Vu<V
SLV 13	0.37	-17141	-2387	2999.63		63639	0.5985	16250	4377			1.83	Si
SLV 12	-0.03	-7098	-2361	259.85		21058	0.749	12545	4228			1.79	Si
SLV 12	0.37	-7069	3121	1314.92		27779	0.5655	13889	3534			1.13	Si
SLV 11	-0.03	-7098	-2361	259.85		21058	0.749	12545	4228			1.79	Si
SLV 11	0.37	-7069	3121	1314.92		27779	0.5655	13889	3534			1.13	Si
SLV 15	-0.03	-10976	-5983	444.98		32565	0.749	14846	5004			0.84	No, Vu<V
SLV 15	0.37	-12940	-180	2425.79		51244	0.5611	16250	4103			22.79	Si
SLV 10	-0.03	-19840	-2455	1936.65		58862	0.749	16250	5477			2.23	Si
SLV 10	0.37	-21074	-4234	3227.73		70523	0.664	16250	4856			1.15	Si
SLV 9	-0.03	-19840	-2455	1936.65		58862	0.749	16250	5477			2.23	Si
SLV 9	0.37	-21074	-4234	3227.73		70523	0.664	16250	4856			1.15	Si
SLV 14	-0.03	-14799	-6011	948.02		43906	0.749	16250	5477			0.91	No, Vu<V
SLV 14	0.37	-17141	-2387	2999.63		63639	0.5985	16250	4377			1.83	Si
SLV 7	-0.03	-7596	715	604.2		22536	0.749	12841	4328			6.05	Si
SLV 7	0.37	-6238	3744	936.59		20594	0.6731	12452	3772			1.01	Si
SLV 8	-0.03	-7596	715	604.2		22536	0.749	12841	4328			6.05	Si
SLV 8	0.37	-6238	3744	936.59		20594	0.6731	12452	3772			1.01	Si
SLV 16	-0.03	-10976	-5983	444.98		32565	0.749	14846	5004			0.84	No, Vu<V
SLV 16	0.37	-12940	-180	2425.79		51244	0.5611	16250	4103			22.79	Si

Verifica a pressoflessione fuori piano D.M. 17-01-18 (N.T.C.)

quota -0.68 Wa 0.08 denominatore 8 γM = 2

Comb.	fd	Sa	σ0	N	M	Mc	Coeff.s.	Verifica
SLV 7	143750	0.24	20723	-6985	45.02	1305.07	28.99	Si
SLV 8	143750	0.24	20723	-6985	45.02	1305.07	28.99	Si
SLV 12	143750	0.24	23707	-7991	45.02	1449.08	32.18	Si
SLV 11	143750	0.24	23707	-7991	45.02	1449.08	32.18	Si
SLV 3	143750	0.24	24348	-8207	45.02	1478.58	32.84	Si
SLV 4	143750	0.24	24348	-8207	45.02	1478.58	32.84	Si
SLV 2	143750	0.24	30439	-10260	45.02	1733.39	38.5	Si
SLV 1	143750	0.24	30439	-10260	45.02	1733.39	38.5	Si
SLV 16	143750	0.24	34294	-11559	45.02	1870.87	41.55	Si
SLV 15	143750	0.24	34294	-11559	45.02	1870.87	41.55	Si

Verifica dei meccanismi locali di collasso con analisi cinematica lineare

forza di aggancio al piano = 0 quota mezzeria = -0.68 Wa = 0.08 Ta = 0.0271

Comb.	N top	N base	V orto	α0	M*	e*	a0*	aLim	Verifica
SLV 8	-3784	-4005	-680	0	515	0.932	0	3.33245	No
SLV 7	-3784	-4005	-680	0	515	0.932	0	3.33245	No
SLV 11	-3839	-8137	-759	0	520.6	0.932	0	3.33245	No
SLV 12	-3839	-8137	-759	0	520.6	0.932	0	3.33245	No
SLV 5	-14976	-11127	1364	0.001	1653	0.976	0.01903	3.33245	No
SLV 6	-14976	-11127	1364	0.001	1653	0.976	0.01903	3.33245	No
SLV 10	-15031	-15259	1285	0.007	1658.6	0.976	0.09766	3.33245	No
SLV 9	-15031	-15259	1285	0.007	1658.6	0.976	0.09766	3.33245	No
SLV 1	-10995	-3813	741	0.026	1247.5	0.969	0.39541	3.47592	No
SLV 2	-10995	-3813	741	0.026	1247.5	0.969	0.39541	3.47592	No

Tabella dei coefficienti di sicurezza minimi

Stato limite	Coeff.s.	Comb.	Verifica
PF_SLU	0.603	SLU 84	No
V_SLU	2.915	SLU 81	Si
PF_SLV	1.194	SLV 9	Si
V_SLV	0.836	SLV 15	No
PFFP_SLV	28.986	SLV 7	Si
R_SLV	0	SLV 7	No

Maschio 9

Verifiche condotte secondo D.M. 17-01-18 (N.T.C.)

Dati geometrici

X ini.	Y ini.	X fin.	Y fin.	Quota i.	Quota.s	l	Sp.	h netta	h ini.	h fin.	a	a.s.,sx	a.s.,dx
-13.763	-3.32	-14.223	-3.32	L1	L3	0.46	0.45	2.7	2.7	2.7			

Caratteristiche del materiale

(Circolare 7 21-01-19 C8.5.I) Muratura in mattoni pieni e malta di calce LC2_Corti

fb	fk	fvk0	fmedio	τ0	fv0	μ	ϕ	fv,lim	E	G	FC
600000			345000	9000	20000	0.58	0.77	32500	320000000	128000000	1.2

Verifica a pressoflessione nel piano secondo D.M. 17-01-18 NTC §7.8.2.2.1 in combinazioni non sismiche, γM = 3

Comb.	Quota	N	M	σ0	Mu	c.s.	Verifica
SLU 80	-2.03	-12053	-1288.09	58238	790.1	0.613	No, M>Mu
SLU 80	0.07	-10843	42.63	52393	889.72	20.87	Si
SLU 82	-2.03	-12259	-1342.4	59231	769.21	0.573	No, M>Mu
SLU 82	0.07	-11007	118.89	53186	878.56	7.39	Si
SLU 81	-2.03	-12228	-1362.31	59081	772.43	0.567	No, M>Mu
SLU 81	0.07	-11003	127.44	53163	878.88	6.897	Si
SLU 79	-2.03	-12022	-1308	58088	793.15	0.606	No, M>Mu
SLU 79	0.07	-10839	51.18	52371	890.03	17.389	Si
SLU 78	-2.03	-12093	-1296.02	58433	786.09	0.607	No, M>Mu
SLU 78	0.07	-10889	40.87	52613	886.7	21.698	Si
SLU 75	-2.03	-11957	-1293.7	57772	799.51	0.618	No, M>Mu
SLU 75	0.07	-10773	48.29	52053	894.3	18.519	Si
SLU 74	-2.03	-11926	-1313.62	57622	802.48	0.611	No, M>Mu
SLU 74	0.07	-10768	56.84	52030	894.59	15.738	Si
SLU 77	-2.03	-12062	-1315.93	58283	789.18	0.6	No, M>Mu
SLU 77	0.07	-10884	49.42	52590	887.02	17.949	Si
SLU 84	-2.03	-12395	-1344.72	59892	754.66	0.561	No, M>Mu
SLU 84	0.07	-11123	111.46	53745	870.22	7.807	Si
SLU 83	-2.03	-12364	-1364.63	59742	758	0.555	No, M>Mu
SLU 83	0.07	-11119	120.01	53723	870.57	7.254	Si

Verifica a pressoflessione nel piano secondo D.M. 17-01-18 NTC §7.8.2.2.1 in combinazioni sismiche, γM = 2

Comb.	Quota	N	M	σ0	Mu	c.s.	Verifica
SLV 10	-2.03	-11719	-1565	56622	1446.03	0.924	No, M>Mu
SLV 10	0.07	-11003	-270.4	53164	1429.32	5.286	Si
SLV 11	-2.03	-3808	-1458.89	0	0	0	No, e>l/2
SLV 11	0.07	-5012	386.08	24218	924.15	2.394	Si
SLV 3	-2.03	-8999	1137.36	43481	1332.99	1.172	Si
SLV 3	0.07	-5020	-217.37	24258	925.3	4.257	Si
SLV 15	-2.03	-5272	-2914.01	0	0	0	No, e>l/2
SLV 15	0.07	-8234	357.52	39783	1276.92	3.572	Si
SLV 13	-2.03	-7646	-2945.84	0	0	0	No, e>l/2
SLV 13	0.07	-10031	160.58	48466	1391.71	8.667	Si
SLV 4	-2.03	-8999	1137.36	43481	1332.99	1.172	Si
SLV 4	0.07	-5020	-217.37	24258	925.3	4.257	Si

Comb.	Quota	N	M	σ0	Mu	c.s.	Verifica
SLV 12	-2.03	-3808	-1458.89	0	0	0	No, e>l/2
SLV 12	0.07	-5012	386.08	24218	924.15	2.394	Si
SLV 14	-2.03	-7646	-2945.84	0	0	0	No, e>l/2
SLV 14	0.07	-10031	160.58	48466	1391.71	8.667	Si
SLV 9	-2.03	-11719	-1565	56622	1446.03	0.924	No, M>Mu
SLV 9	0.07	-11003	-270.4	53164	1429.32	5.286	Si
SLV 16	-2.03	-5272	-2914.01	0	0	0	No, e>l/2
SLV 16	0.07	-8234	357.52	39783	1276.92	3.572	Si

Verifica a taglio nel piano secondo D.M. 17-01-18 (N.T.C.) §7.8.2.2.2 con rottura per scorrimento in combinazioni non sismiche, γM = 3

Comb.	Quota	N	V par	M	σ0	σN	l'	fvd	Vt scorr.	Vt fess.diag.	Vt,lim	c.s.	Verifica
SLU 78	-2.03	-12093	-2049	-1296.02		72954	0.3684	10833	1796			0.88	No, Vu<V
SLU 78	0.07	-10889	1117	40.87		52613	0.4599	10833	2242			2.01	Si
SLU 75	-2.03	-11957	-2042	-1293.7		72740	0.3653	10833	1781			0.87	No, Vu<V
SLU 75	0.07	-10773	1111	48.29		52053	0.4599	10833	2242			2.02	Si
SLU 81	-2.03	-12228	-2145	-1362.31		76405	0.3556	10833	1734			0.81	No, Vu<V
SLU 81	0.07	-11003	1252	127.44		53163	0.4599	10833	2242			1.79	Si
SLU 82	-2.03	-12259	-2119	-1342.4		75386	0.3614	10833	1762			0.83	No, Vu<V
SLU 82	0.07	-11007	1243	118.89		53186	0.4599	10833	2242			1.8	Si
SLU 74	-2.03	-11926	-2068	-1313.62		73733	0.3594	10833	1752			0.85	No, Vu<V
SLU 74	0.07	-10768	1119	56.84		52030	0.4599	10833	2242			2	Si
SLU 83	-2.03	-12364	-2152	-1364.63		76584	0.3588	10833	1749			0.81	No, Vu<V
SLU 83	0.07	-11119	1257	120.01		53723	0.4599	10833	2242			1.78	Si
SLU 79	-2.03	-12022	-2065	-1308		73500	0.3635	10833	1772			0.86	No, Vu<V
SLU 79	0.07	-10839	1122	51.18		52371	0.4599	10833	2242			2	Si
SLU 84	-2.03	-12395	-2126	-1344.72		75586	0.3644	10833	1777			0.84	No, Vu<V
SLU 84	0.07	-11123	1249	111.46		53745	0.4599	10833	2242			1.8	Si
SLU 80	-2.03	-12053	-2039	-1288.09		72533	0.3693	10833	1800			0.88	No, Vu<V
SLU 80	0.07	-10843	1114	42.63		52393	0.4599	10833	2242			2.01	Si
SLU 77	-2.03	-12062	-2075	-1315.93		73926	0.3626	10833	1768			0.85	No, Vu<V
SLU 77	0.07	-10884	1125	49.42		52590	0.4599	10833	2242			1.99	Si

Verifica a taglio nel piano secondo D.M. 17-01-18 (N.T.C.) §7.8.2.2.2 con rottura per scorrimento in combinazioni sismiche, γM = 2

Comb.	Quota	N	V par	M	σ0	σN	l'	fvd	Vt scorr.	Vt fess.diag.	Vt,lim	c.s.	Verifica
SLV 11	-2.03	-3808	-2144	-1458.89		0	0	8333	0			0	No, Vu<V
SLV 11	0.07	-5012	553	386.08		24277	0.4588	13189	2723			4.93	Si
SLV 14	-2.03	-7646	-3560	-2945.84		0	0	8333	0			0	No, Vu<V
SLV 14	0.07	-10031	1247	160.58		48466	0.4599	16250	3363			2.7	Si
SLV 12	-2.03	-3808	-2144	-1458.89		0	0	8333	0			0	No, Vu<V
SLV 12	0.07	-5012	553	386.08		24277	0.4588	13189	2723			4.93	Si
SLV 10	-2.03	-11719	-1996	-1565		90036	0.2892	16250	2115			1.06	Si
SLV 10	0.07	-11003	1087	-270.4		53164	0.4599	16250	3363			3.09	Si
SLV 15	-2.03	-5272	-3605	-2914.01		0	0	8333	0			0	No, Vu<V
SLV 15	0.07	-8234	1086	357.52		39783	0.4599	16250	3363			3.1	Si
SLV 9	-2.03	-11719	-1996	-1565		90036	0.2892	16250	2115			1.06	Si
SLV 9	0.07	-11003	1087	-270.4		53164	0.4599	16250	3363			3.09	Si
SLV 16	-2.03	-5272	-3605	-2914.01		0	0	8333	0			0	No, Vu<V
SLV 16	0.07	-8234	1086	357.52		39783	0.4599	16250	3363			3.1	Si
SLV 13	-2.03	-7646	-3560	-2945.84		0	0	8333	0			0	No, Vu<V
SLV 13	0.07	-10031	1247	160.58		48466	0.4599	16250	3363			2.7	Si
SLV 3	-2.03	-8999	717	1137.36		64361	0.3107	16250	2272			3.17	Si
SLV 3	0.07	-5020	96	-217.37		24258	0.4599	13185	2729			28.41	Si
SLV 4	-2.03	-8999	717	1137.36		64361	0.3107	16250	2272			3.17	Si
SLV 4	0.07	-5020	96	-217.37		24258	0.4599	13185	2729			28.41	Si

Verifica a pressoflessione fuori piano D.M. 17-01-18 (N.T.C.)

quota -0.68 Wa 0.08 denominatore 8 γM = 2

Comb.	fd	Sa	σ0	N	M	Mc	Coeff.s.	Verifica
SLV 8	143750	0.24	31435	-6506	27.65	1087.23	39.33	Si
SLV 7	143750	0.24	31435	-6506	27.65	1087.23	39.33	Si
SLV 11	143750	0.24	36683	-7592	27.65	1195.36	43.24	Si
SLV 12	143750	0.24	36683	-7592	27.65	1195.36	43.24	Si
SLV 3	143750	0.24	38445	-7957	27.65	1226.97	44.38	Si
SLV 4	143750	0.24	38445	-7957	27.65	1226.97	44.38	Si
SLV 9	143750	0.24	74203	-15357	27.65	1356.97	49.08	Si
SLV 10	143750	0.24	74203	-15357	27.65	1356.97	49.08	Si
SLV 1	143750	0.24	49701	-10286	27.65	1373	49.66	Si
SLV 2	143750	0.24	49701	-10286	27.65	1373	49.66	Si

Verifica dei meccanismi locali di collasso con analisi cinematica lineare

forza di aggancio al piano = 0 quota mezzeria = -0.68 Wa = 0.08 Ta = 0.0271

Comb.	N top	N base	V orto	α0	M*	e*	a0*	aLim	Verifica
SLV 8	-1861	-4926	-411	0	269.6	0.923	0	3.33245	No
SLV 1	-3352	-11372	402	0	420.3	0.946	0	3.47592	No
SLV 6	-5323	-12837	811	0	620.6	0.962	0	3.33245	No
SLV 11	-2512	-3808	-428	0	335.3	0.935	0	3.33245	No
SLV 5	-5323	-12837	811	0	620.6	0.962	0	3.33245	No
SLV 12	-2512	-3808	-428	0	335.3	0.935	0	3.33245	No
SLV 7	-1861	-4926	-411	0	269.6	0.923	0	3.33245	No
SLV 10	-5973	-11719	795	0	686.9	0.965	0	3.33245	No
SLV 9	-5973	-11719	795	0	686.9	0.965	0	3.33245	No
SLV 2	-3352	-11372	402	0	420.3	0.946	0	3.47592	No

Tabella dei coefficienti di sicurezza minimi

Stato limite	Coeff.s.	Comb.	Verifica
PF_SLU	0.555	SLU 83	No
V_SLU	0.808	SLU 81	No
PF_SLV	0	SLV 11	No
V_SLV	0	SLV 11	No

Stato limite	Coeff.s.	Comb.	Verifica
PFFP_SLV	39.327	SLV 7	Si
R_SLV	0	SLV 1	No

Maschio 10

Verifiche condotte secondo D.M. 17-01-18 (N.T.C.)

Dati geometrici

X ini.	Y ini.	X fin.	Y fin.	Quota i.	Quota.s	l	Sp.	h netta	h ini.	h fin.	a	a.s.,sx	a.s.,dx
-18.448	1.046	-18.448	-3.059	L1	L3	4.105	0.3	2.7	2.7	2.7			

Caratteristiche del materiale

(Circolare 7 21-01-19 C8.5.I) Muratura in mattoni pieni e malta di calce LC2_Corti

fb	fk	fvk0	fmedio	τ0	fv0	μ	ϕ	fv,lim	E	G	FC
600000			345000	9000	20000	0.58	0.77	32500	320000000	128000000	1.2

Verifica a pressoflessione nel piano secondo D.M. 17-01-18 NTC §7.8.2.2.1 in combinazioni non sismiche, γM = 3

Comb.	Quota	N	M	σ0	Mu	c.s.	Verifica
SLU 83	-2.03	-67777	1682.92	55036	45123.24	26.813	Si
SLU 83	0.67	-56341	11619.71	45750	50692.48	4.363	Si
SLU 82	-2.03	-67250	4499.35	54608	45497.17	10.112	Si
SLU 82	0.67	-54982	11507.35	44646	50998.53	4.432	Si
SLU 81	-2.03	-66990	1715.69	54397	45677.9	26.624	Si
SLU 81	0.67	-55590	11600.84	45140	50870.97	4.385	Si
SLU 78	-2.03	-66608	4735.19	54087	45938.23	9.701	Si
SLU 78	0.67	-54493	11323.29	44249	51090.15	4.512	Si
SLU 79	-2.03	-65909	1990.67	53520	46398.18	23.308	Si
SLU 79	0.67	-54687	11378.98	44406	51055.02	4.487	Si
SLU 75	-2.03	-65821	4767.96	53448	46455.23	9.743	Si
SLU 75	0.67	-53742	11304.42	43639	51211.84	4.53	Si
SLU 74	-2.03	-65560	1984.31	53236	46620.73	23.495	Si
SLU 74	0.67	-54350	11397.9	44133	51115.13	4.485	Si
SLU 80	-2.03	-66170	4774.32	53731	46228.96	9.683	Si
SLU 80	0.67	-54079	11285.49	43913	51160.11	4.533	Si
SLU 84	-2.03	-68037	4466.57	55247	44934.13	10.06	Si
SLU 84	0.67	-55733	11526.23	45256	50838.72	4.411	Si
SLU 77	-2.03	-66347	1951.53	53875	46112.11	23.629	Si
SLU 77	0.67	-55101	11416.78	44743	50974.75	4.465	Si

Verifica a pressoflessione nel piano secondo D.M. 17-01-18 NTC §7.8.2.2.1 in combinazioni sismiche, γM = 2

Comb.	Quota	N	M	σ0	Mu	c.s.	Verifica
SLV 7	-2.03	-36983	-35940.98	30031	57251.41	1.593	Si
SLV 7	0.67	-32513	-3006.9	26401	52314.37	17.398	Si
SLV 6	-2.03	-55284	30927.49	44891	71781.29	2.321	Si
SLV 6	0.67	-42246	15957.97	34305	62366.1	3.908	Si
SLV 14	-2.03	-44942	27492.12	36493	64692.89	2.353	Si
SLV 14	0.67	-37320	17306.81	30305	57601.54	3.328	Si
SLV 13	-2.03	-44942	27492.12	36493	64692.89	2.353	Si
SLV 13	0.67	-37320	17306.81	30305	57601.54	3.328	Si
SLV 9	-2.03	-53467	40143.77	43416	70747.22	1.762	Si
SLV 9	0.67	-41545	19644.07	33735	61728.15	3.142	Si
SLV 8	-2.03	-36983	-35940.98	30031	57251.41	1.593	Si
SLV 8	0.67	-32513	-3006.9	26401	52314.37	17.398	Si
SLV 11	-2.03	-35166	-26724.71	28556	55310.22	2.07	Si
SLV 11	0.67	-31812	679.2	25832	51490.19	75.81	Si
SLV 12	-2.03	-35166	-26724.71	28556	55310.22	2.07	Si
SLV 12	0.67	-31812	679.2	25832	51490.19	75.81	Si
SLV 10	-2.03	-53467	40143.77	43416	70747.22	1.762	Si
SLV 10	0.67	-41545	19644.07	33735	61728.15	3.142	Si
SLV 5	-2.03	-55284	30927.49	44891	71781.29	2.321	Si
SLV 5	0.67	-42246	15957.97	34305	62366.1	3.908	Si

Verifica a taglio nel piano secondo D.M. 17-01-18 (N.T.C.) §7.8.2.2.2 con rottura per scorrimento in combinazioni non sismiche, γM = 3

Comb.	Quota	N	V par	M	σ0	σN	l'	fvd	Vt scorr.	Vt fess.diag.	Vt,lim	c.s.	Verifica
SLU 44	-2.03	-52800	2161	8106.77		42874	4.105	10833	13341			6.17	Si
SLU 44	0.67	-41244	2123	10067.53		33491	4.105	10021	12341			5.81	Si
SLU 34	-2.03	-54996	2178	5700.09		44658	4.105	10833	13341			6.13	Si
SLU 34	0.67	-44572	2136	8980.14		36194	4.105	10381	12785			5.98	Si
SLU 2	-2.03	-42239	2307	7144		34299	4.105	10129	12474			5.41	Si
SLU 2	0.67	-32894	2278	7843.37		26710	4.105	9117	11228			4.93	Si
SLU 31	-2.03	-54209	2169	5732.86		44019	4.105	10833	13341			6.15	Si
SLU 31	0.67	-43821	2128	8961.27		35584	4.105	10300	12684			5.96	Si
SLU 47	-2.03	-53587	2169	8074		43513	4.105	10833	13341			6.15	Si
SLU 47	0.67	-41995	2131	10086.4		34101	4.105	10102	12441			5.84	Si
SLU 23	-2.03	-48016	2243	6527.42		38990	4.105	10754	13244			5.9	Si
SLU 23	0.67	-38209	2208	8355.53		31026	4.105	9692	11936			5.4	Si
SLU 10	-2.03	-48432	2233	6349.45		39328	4.105	10799	13299			5.95	Si
SLU 10	0.67	-38506	2198	8449.11		31268	4.105	9725	11976			5.45	Si
SLU 5	-2.03	-43026	2316	7111.22		34938	4.105	10214	12578			5.43	Si
SLU 5	0.67	-33645	2285	7862.24		27320	4.105	9198	11328			4.96	Si
SLU 13	-2.03	-49219	2242	6316.67		39967	4.105	10833	13341			5.95	Si
SLU 13	0.67	-39257	2206	8467.98		31878	4.105	9806	12076			5.48	Si
SLU 26	-2.03	-48803	2252	6494.64		39629	4.105	10833	13341			5.92	Si
SLU 26	0.67	-38960	2216	8374.4		31636	4.105	9774	12036			5.43	Si

Verifica a taglio nel piano secondo D.M. 17-01-18 (N.T.C.) §7.8.2.2.2 con rottura per scorrimento in combinazioni sismiche, γM = 2

Comb.	Quota	N	V par	M	σ0	σN	l'	fvd	Vt scorr.	Vt fess.diag.	Vt,lim	c.s.	Verifica
SLV 8	-2.03	-36983	-17537	-35940.98		38025	3.242	15938	15502			0.88	No, Vu<V
SLV 8	0.67	-32513	-18010	-3006.9		26401	4.105	13614	16765			0.93	No, Vu<V
SLV 11	-2.03	-35166	-16704	-26724.71		30230	3.8776	14379	16727			1	Si
SLV 11	0.67	-31812	-17701	679.2		25832	4.105	13500	16625			0.94	No, Vu<V
SLV 6	-2.03	-55284	15502	30927.49		44891	4.105	16250	20012			1.29	Si
SLV 6	0.67	-42246	16425	15957.97		34305	4.105	15194	18712			1.14	Si
SLV 4	-2.03	-45508	-6946	-23289.33		36953	4.105	15724	19364			2.79	Si
SLV 4	0.67	-36738	-6319	-669.65		29832	4.105	14300	17610			2.79	Si
SLV 12	-2.03	-35166	-16704	-26724.71		30230	3.8776	14379	16727			1	Si
SLV 12	0.67	-31812	-17701	679.2		25832	4.105	13500	16625			0.94	No, Vu<V
SLV 5	-2.03	-55284	15502	30927.49		44891	4.105	16250	20012			1.29	Si
SLV 5	0.67	-42246	16425	15957.97		34305	4.105	15194	18712			1.14	Si
SLV 9	-2.03	-53467	16336	40143.77		45639	3.905	16250	19037			1.17	Si
SLV 9	0.67	-41545	16735	19644.07		33735	4.105	15080	18571			1.11	Si
SLV 3	-2.03	-45508	-6946	-23289.33		36953	4.105	15724	19364			2.79	Si
SLV 3	0.67	-36738	-6319	-669.65		29832	4.105	14300	17610			2.79	Si
SLV 7	-2.03	-36983	-17537	-35940.98		38025	3.242	15938	15502			0.88	No, Vu<V
SLV 7	0.67	-32513	-18010	-3006.9		26401	4.105	13614	16765			0.93	No, Vu<V
SLV 10	-2.03	-53467	16336	40143.77		45639	3.905	16250	19037			1.17	Si
SLV 10	0.67	-41545	16735	19644.07		33735	4.105	15080	18571			1.11	Si

Verifica a pressoflessione fuori piano D.M. 17-01-18 (N.T.C.)

quota -0.68 Wa 0.05 denominatore 8 γM = 2

Comb.	fd	Sa	σ0	N	M	Mc	Coeff.s.	Verifica
SLV 12	143750	0.24	29037	-35760	164.5	4089.22	24.86	Si
SLV 11	143750	0.24	29037	-35760	164.5	4089.22	24.86	Si
SLV 8	143750	0.24	30243	-37245	164.5	4203.91	25.56	Si
SLV 7	143750	0.24	30243	-37245	164.5	4203.91	25.56	Si
SLV 15	143750	0.24	30923	-38082	164.5	4266.62	25.94	Si
SLV 16	143750	0.24	30923	-38082	164.5	4266.62	25.94	Si
SLV 13	143750	0.24	33746	-41558	164.5	4512.05	27.43	Si
SLV 14	143750	0.24	33746	-41558	164.5	4512.05	27.43	Si
SLV 4	143750	0.24	34943	-43033	164.5	4608.92	28.02	Si
SLV 3	143750	0.24	34943	-43033	164.5	4608.92	28.02	Si

Verifica dei meccanismi locali di collasso con analisi cinematica lineare

forza di aggancio al piano = 0 quota mezzeria = -0.68 Wa = 0.05 Ta = 0.0406

Comb.	N top	N base	V orto	α0	M*	e*	a0*	aLim	Verifica
SLV 2	-39658	-50998	-18	0.059	4505.7	0.968	0.886	4.36108	No
SLV 1	-39658	-50998	-18	0.059	4505.7	0.968	0.886	4.36108	No
SLV 13	-37320	-44942	19	0.059	4267.7	0.967	0.89014	4.36108	No
SLV 14	-37320	-44942	19	0.059	4267.7	0.967	0.89014	4.36108	No
SLV 3	-36738	-45508	-16	0.059	4208.5	0.966	0.89226	4.36108	No
SLV 4	-36738	-45508	-16	0.059	4208.5	0.966	0.89226	4.36108	No
SLV 15	-34400	-39452	20	0.059	3970.6	0.964	0.896	4.36108	No
SLV 16	-34400	-39452	20	0.059	3970.6	0.964	0.896	4.36108	No
SLV 6	-42246	-55284	-7	0.059	4769.2	0.97	0.88524	4.07946	No
SLV 5	-42246	-55284	-7	0.059	4769.2	0.97	0.88524	4.07946	No

Tabella dei coefficienti di sicurezza minimi

Stato limite	Coeff.s.	Comb.	Verifica
PF_SLU	4.363	SLU 83	Si
V_SLU	4.929	SLU 2	Si
PF_SLV	1.593	SLV 7	Si
V_SLV	0.884	SLV 7	No
PFFP_SLV	24.858	SLV 11	Si
R_SLV	0.203	SLV 1	No

Maschio 11

Verifiche condotte secondo D.M. 17-01-18 (N.T.C.)

Dati geometrici

X ini.	Y ini.	X fin.	Y fin.	Quota i.	Quota.s	l	Sp.	h netta	h ini.	h fin.	a	a.s.,sx	a.s.,dx
-16.923	-4.725	-16.923	-3.32	L1	L3	1.405	0.45	2.7	2.7	2.7			

Caratteristiche del materiale

(Circolare 7 21-01-19 C8.5.I) Muratura in mattoni pieni e malta di calce LC2_Corti

fb	fk	fvk0	fmedio	τ0	fv0	μ	ϕ	fv,lim	E	G	FC
600000			345000	9000	20000	0.58	0.77	32500	320000000	128000000	1.2

Verifica a pressoflessione nel piano secondo D.M. 17-01-18 NTC §7.8.2.2.1 in combinazioni non sismiche, γM = 3

Comb.	Quota	N	M	σ0	Mu	c.s.	Verifica
SLU 77	-2.03	-20437	1742.47	32323	8660.28	4.97	Si
SLU 77	0.67	-7499	1638.9	11860	4500.9	2.746	Si
SLU 79	-2.03	-20377	1727.07	32229	8651.58	5.009	Si
SLU 79	0.67	-7478	1618.18	11827	4490.71	2.775	Si
SLU 32	-2.03	-16721	1504.48	26446	7933.23	5.273	Si
SLU 32	0.67	-6161	1396.93	9745	3810.7	2.728	Si
SLU 83	-2.03	-20935	1825.79	33111	8729.12	4.781	Si
SLU 83	0.67	-7682	1687.81	12149	4591.65	2.72	Si
SLU 81	-2.03	-20784	1817.02	32872	8708.95	4.793	Si
SLU 81	0.67	-7598	1669.37	12017	4550.37	2.726	Si
SLU 37	-2.03	-16813	1497.84	26591	7955.65	5.311	Si
SLU 37	0.67	-6224	1394.65	9845	3844.36	2.756	Si

Comb.	Quota	N	M	σ0	Mu	c.s.	Verifica
SLU 39	-2.03	-17219	1587.8	27234	8052.57	5.072	Si
SLU 39	0.67	-6345	1445.84	10035	3908.12	2.703	Si
SLU 74	-2.03	-20286	1733.7	32084	8638.06	4.982	Si
SLU 74	0.67	-7415	1620.46	11728	4459.2	2.752	Si
SLU 41	-2.03	-17371	1596.56	27473	8087.43	5.066	Si
SLU 41	0.67	-6428	1464.28	10167	3952.26	2.699	Si
SLU 35	-2.03	-16872	1513.24	26685	7970.15	5.267	Si
SLU 35	0.67	-6245	1415.37	9877	3855.25	2.724	Si

Verifica a pressoflessione nel piano secondo D.M. 17-01-18 NTC §7.8.2.2.1 in combinazioni sismiche, γM = 2

Comb.	Quota	N	M	σ0	Mu	c.s.	Verifica
SLV 14	-2.03	-16820	3279.71	26602	9243.55	2.818	Si
SLV 14	0.67	-2058	4284.07	0	0	0	No, e>l/2
SLV 6	-2.03	-21202	-165.89	33533	10807.13	65.147	Si
SLV 6	0.67	-2706	5611.46	0	0	0	No, e>l/2
SLV 12	-2.03	-7473	2457.93	11819	4741.87	1.929	Si
SLV 12	0.67	-7645	-3460.93	12092	4839.45	1.398	Si
SLV 7	-2.03	-7240	1066.77	11451	4609.52	4.321	Si
SLV 7	0.67	-8954	-4478.15	14161	5561.14	1.242	Si
SLV 9	-2.03	-21435	1225.27	33901	10880.39	8.88	Si
SLV 9	0.67	-1398	6628.68	0	0	0	No, e>l/2
SLV 10	-2.03	-21435	1225.27	33901	10880.39	8.88	Si
SLV 10	0.67	-1398	6628.68	0	0	0	No, e>l/2
SLV 13	-2.03	-16820	3279.71	26602	9243.55	2.818	Si
SLV 13	0.67	-2058	4284.07	0	0	0	No, e>l/2
SLV 11	-2.03	-7473	2457.93	11819	4741.87	1.929	Si
SLV 11	0.67	-7645	-3460.93	12092	4839.45	1.398	Si
SLV 5	-2.03	-21202	-165.89	33533	10807.13	65.147	Si
SLV 5	0.67	-2706	5611.46	0	0	0	No, e>l/2
SLV 8	-2.03	-7240	1066.77	11451	4609.52	4.321	Si
SLV 8	0.67	-8954	-4478.15	14161	5561.14	1.242	Si

Verifica a taglio nel piano secondo D.M. 17-01-18 (N.T.C.) §7.8.2.2.2 con rottura per scorrimento in combinazioni non sismiche, γM = 3

Comb.	Quota	N	V par	M	σ0	σN	l'	fvd	Vt scorr.	Vt fess.diag.	Vt,lim	c.s.	Verifica
SLU 13	-2.03	-15413	13	1405.54		24378	1.405	8806	5568			438.59	Si
SLU 13	0.67	-5725	212	944.48		9055	1.405	6763	4276			20.16	Si
SLU 47	-2.03	-17323	0	1383.96		27399	1.405	9209	5822			1000	Si
SLU 47	0.67	-6309	213	962.51		9978	1.405	6886	4354			20.47	Si
SLU 34	-2.03	-16801	-12	1622.74		26573	1.405	9099	5753			461.72	Si
SLU 34	0.67	-6289	212	1134.49		9947	1.405	6882	4351			20.51	Si
SLU 10	-2.03	-15262	15	1396.77		24139	1.405	8774	5548			367.89	Si
SLU 10	0.67	-5642	210	926.04		8923	1.405	6745	4265			20.33	Si
SLU 2	-2.03	-13608	39	1145.97		21522	1.405	8425	5327			137.81	Si
SLU 2	0.67	-4972	209	720.54		7863	1.405	6604	4175			19.99	Si
SLU 23	-2.03	-14996	14	1363.16		23718	1.405	8718	5512			408.27	Si
SLU 23	0.67	-5536	209	910.56		8755	1.405	6723	4251			20.35	Si
SLU 26	-2.03	-15147	11	1371.93		23957	1.405	8750	5532			497.66	Si
SLU 26	0.67	-5619	211	929		8888	1.405	6741	4262			20.18	Si
SLU 31	-2.03	-16650	-10	1613.97		26334	1.405	9067	5733			569.02	Si
SLU 31	0.67	-6206	210	1116.06		9815	1.405	6864	4340			20.69	Si
SLU 44	-2.03	-17172	2	1375.19		27160	1.405	9177	5802			1000	Si
SLU 44	0.67	-6225	210	944.07		9846	1.405	6868	4343			20.64	Si
SLU 5	-2.03	-13759	36	1154.73		21761	1.405	8457	5347			147.42	Si
SLU 5	0.67	-5055	211	738.98		7995	1.405	6622	4187			19.82	Si

Verifica a taglio nel piano secondo D.M. 17-01-18 (N.T.C.) §7.8.2.2.2 con rottura per scorrimento in combinazioni sismiche, γM = 2

Comb.	Quota	N	V par	M	σ0	σN	l'	fvd	Vt scorr.	Vt fess.diag.	Vt,lim	c.s.	Verifica
SLV 5	-2.03	-21202	-2788	-165.89		33533	1.405	15040	9509			3.41	Si
SLV 5	0.67	-2706	-3273	5611.46		0	0	8333	0			0	No, Vu<V
SLV 8	-2.03	-7240	2782	1066.77		11451	1.405	10623	6717			2.41	Si
SLV 8	0.67	-8954	4068	-4478.15		32773	0.6071	14888	4067			1	No, Vu<V
SLV 11	-2.03	-7473	2458	2457.93		14816	1.1208	11297	5697			2.32	Si
SLV 11	0.67	-7645	3284	-3460.93		22668	0.7495	12867	4340			1.32	Si
SLV 7	-2.03	-7240	2782	1066.77		11451	1.405	10623	6717			2.41	Si
SLV 7	0.67	-8954	4068	-4478.15		32773	0.6071	14888	4067			1	No, Vu<V
SLV 6	-2.03	-21202	-2788	-165.89		33533	1.405	15040	9509			3.41	Si
SLV 6	0.67	-2706	-3273	5611.46		0	0	8333	0			0	No, Vu<V
SLV 14	-2.03	-16820	-1540	3279.71		26602	1.405	13654	8633			5.6	Si
SLV 14	0.67	-2058	-2403	4284.07		0	0	8333	0			0	No, Vu<V
SLV 12	-2.03	-7473	2458	2457.93		14816	1.1208	11297	5697			2.32	Si
SLV 12	0.67	-7645	3284	-3460.93		22668	0.7495	12867	4340			1.32	Si
SLV 13	-2.03	-16820	-1540	3279.71		26602	1.405	13654	8633			5.6	Si
SLV 13	0.67	-2058	-2403	4284.07		0	0	8333	0			0	No, Vu<V
SLV 10	-2.03	-21435	-3112	1225.27		33901	1.405	15114	9556			3.07	Si
SLV 10	0.67	-1398	-4057	6628.68		0	0	8333	0			0	No, Vu<V
SLV 9	-2.03	-21435	-3112	1225.27		33901	1.405	15114	9556			3.07	Si
SLV 9	0.67	-1398	-4057	6628.68		0	0	8333	0			0	No, Vu<V

Verifica a pressoflessione fuori piano D.M. 17-01-18 (N.T.C.)

quota -0.68 Wa 0.08 denominatore 8 γM = 2

Comb.	fd	Sa	σ0	N	M	Mc	Coeff.s.	Verifica
SLV 11	143750	0.24	7967	-5037	84.46	1059.48	12.54	Si
SLV 12	143750	0.24	7967	-5037	84.46	1059.48	12.54	Si
SLV 7	143750	0.24	8304	-5250	84.46	1101.04	13.04	Si
SLV 8	143750	0.24	8304	-5250	84.46	1101.04	13.04	Si
SLV 16	143750	0.24	15406	-9741	84.46	1915.32	22.68	Si
SLV 15	143750	0.24	15406	-9741	84.46	1915.32	22.68	Si
SLV 4	143750	0.24	16529	-10451	84.46	2033.35	24.08	Si
SLV 3	143750	0.24	16529	-10451	84.46	2033.35	24.08	Si
SLV 14	143750	0.24	22119	-13985	84.46	2577.05	30.51	Si

Comb.	fd	Sa	σ0	N	M	Mc	Coeff.s.	Verifica
SLV 13	143750	0.24	22119	-13985	84.46	2577.05	30.51	Si

Verifica dei meccanismi locali di collasso con analisi cinematica lineare

forza di aggancio al piano = 0 quota mezzeria = -0.68 Wa = 0.08 Ta = 0.0271

Comb.	N top	N base	V orto	α0	M*	e*	a0*	aLim	Verifica
SLV 10	-1398	-21435	251	0.042	405.2	0.889	0.67864	3.33245	No
SLV 9	-1398	-21435	251	0.042	405.2	0.889	0.67864	3.33245	No
SLV 7	-8954	-7240	-476	0.05	1153.8	0.941	0.77501	3.33245	No
SLV 8	-8954	-7240	-476	0.05	1153.8	0.941	0.77501	3.33245	No
SLV 3	-8294	-11855	-400	0.056	1087	0.938	0.86302	3.47592	No
SLV 4	-8294	-11855	-400	0.056	1087	0.938	0.86302	3.47592	No
SLV 11	-7645	-7473	-358	0.058	1021.4	0.935	0.90566	3.33245	No
SLV 12	-7645	-7473	-358	0.058	1021.4	0.935	0.90566	3.33245	No
SLV 1	-6419	-16044	-217	0.072	897.7	0.928	1.13053	3.47592	No
SLV 2	-6419	-16044	-217	0.072	897.7	0.928	1.13053	3.47592	No

Tabella dei coefficienti di sicurezza minimi

Stato limite	Coeff.s.	Comb.	Verifica
PF_SLU	2.699	SLU 41	Si
V_SLU	19.825	SLU 5	Si
PF_SLV	0	SLV 5	No
V_SLV	0	SLV 5	No
PFFP_SLV	12.544	SLV 11	Si
R_SLV	0.204	SLV 9	No

Maschio 12

Verifiche condotte secondo D.M. 17-01-18 (N.T.C.)

Dati geometrici

X ini.	Y ini.	X fin.	Y fin.	Quota i.	Quota.s	l	Sp.	h netta	h ini.	h fin.	a	a.s.,sx	a.s.,dx
-14.033	-4.725	-16.923	-4.725	L1	L3	2.89	0.45	2.7	2.7	2.7			

Caratteristiche del materiale

(Circolare 7 21-01-19 C8.5.I) Muratura in mattoni pieni e malta di calce LC2_Corti

fb	fk	fvk0	fmedio	τ0	fv0	μ	ϕ	fv,lim	E	G	FC
600000			345000	9000	20000	0.58	0.77	32500	320000000	128000000	1.2

Verifica a pressoflessione nel piano secondo D.M. 17-01-18 NTC §7.8.2.2.1 in combinazioni non sismiche, γM = 3

Comb.	Quota	N	M	σ0	Mu	c.s.	Verifica
SLU 72	-2.03	-28204	-3479.25	21687	29904.11	8.595	Si
SLU 72	0.67	-17889	2754.26	13756	21484.51	7.8	Si
SLU 81	-2.03	-30570	-4071.77	23507	31426.11	7.718	Si
SLU 81	0.67	-20260	2892.34	15579	23676.85	8.186	Si
SLU 83	-2.03	-30796	-4098.53	23680	31563.43	7.701	Si
SLU 83	0.67	-20456	2935.66	15730	23850.99	8.125	Si
SLU 75	-2.03	-29901	-3955.14	22992	31011.14	7.841	Si
SLU 75	0.67	-19545	2872.26	15029	23032.06	8.019	Si
SLU 84	-2.03	-30677	-4127.85	23589	31491.32	7.629	Si
SLU 84	0.67	-20292	2943.94	15603	23704.96	8.052	Si
SLU 76	-2.03	-29788	-3944.79	22905	30940	7.843	Si
SLU 76	0.67	-19403	2879.57	14920	22901.71	7.953	Si
SLU 70	-2.03	-28238	-3509.15	21713	29926.74	8.528	Si
SLU 70	0.67	-17922	2752.47	13781	21516.24	7.817	Si
SLU 78	-2.03	-30127	-3981.9	23166	31152.58	7.824	Si
SLU 78	0.67	-19741	2915.57	15180	23210.02	7.961	Si
SLU 68	-2.03	-27899	-3472.04	21453	29696.7	8.553	Si
SLU 68	0.67	-17584	2716.47	13521	21191.14	7.801	Si
SLU 82	-2.03	-30451	-4101.09	23415	31353.27	7.645	Si
SLU 82	0.67	-20096	2900.63	15453	23529.94	8.112	Si

Verifica a pressoflessione nel piano secondo D.M. 17-01-18 NTC §7.8.2.2.1 in combinazioni sismiche, γM = 2

Comb.	Quota	N	M	σ0	Mu	c.s.	Verifica
SLV 12	-2.03	-3688	-2733.61	2836	5204.88	1.904	Si
SLV 12	0.67	-2166	3898.52	0	0	0	No, e>l/2
SLV 14	-2.03	-18476	-8324.62	14207	23593.22	2.834	Si
SLV 14	0.67	-9471	5743.87	7283	12869.68	2.241	Si
SLV 9	-2.03	-34924	-5734.82	26855	39373.61	6.866	Si
SLV 9	0.67	-21124	2537.45	16243	26466.25	10.43	Si
SLV 10	-2.03	-34924	-5734.82	26855	39373.61	6.866	Si
SLV 10	0.67	-21124	2537.45	16243	26466.25	10.43	Si
SLV 8	-2.03	-8415	386.58	6471	11515.84	29.789	Si
SLV 8	0.67	-6467	1558.48	4972	8963.84	5.752	Si
SLV 11	-2.03	-3688	-2733.61	2836	5204.88	1.904	Si
SLV 11	0.67	-2166	3898.52	0	0	0	No, e>l/2
SLV 13	-2.03	-18476	-8324.62	14207	23593.22	2.834	Si
SLV 13	0.67	-9471	5743.87	7283	12869.68	2.241	Si
SLV 7	-2.03	-8415	386.58	6471	11515.84	29.789	Si
SLV 7	0.67	-6467	1558.48	4972	8963.84	5.752	Si
SLV 15	-2.03	-9105	-7424.26	7001	12402.6	1.671	Si
SLV 15	0.67	-3783	6152.19	0	0	0	No, e>l/2
SLV 16	-2.03	-9105	-7424.26	7001	12402.6	1.671	Si
SLV 16	0.67	-3783	6152.19	0	0	0	No, e>l/2

Verifica a taglio nel piano secondo D.M. 17-01-18 (N.T.C.) §7.8.2.2.2 con rottura per scorrimento in combinazioni non sismiche, γM = 3

Comb.	Quota	N	V par	M	σ0	σN	l'	fvd	Vt scorr.	Vt fess.diag.	Vt,lim	c.s.	Verifica
SLU 81	-2.03	-30570	5091	-4071.77		23507	2.89	8690	11301			2.22	Si
SLU 81	0.67	-20260	1808	2892.34		15579	2.89	7633	9926			5.49	Si
SLU 73	-2.03	-29562	5002	-3918.03		22732	2.89	8586	11167			2.23	Si
SLU 73	0.67	-19207	1930	2836.25		14769	2.89	7525	9786			5.07	Si
SLU 75	-2.03	-29901	5023	-3955.14		22992	2.89	8621	11212			2.23	Si
SLU 75	0.67	-19545	1882	2872.26		15029	2.89	7559	9831			5.22	Si
SLU 82	-2.03	-30451	5148	-4101.09		23415	2.89	8678	11285			2.19	Si
SLU 82	0.67	-20096	1919	2900.63		15453	2.89	7616	9904			5.16	Si
SLU 83	-2.03	-30796	5137	-4098.53		23680	2.89	8713	11331			2.21	Si
SLU 83	0.67	-20456	1833	2935.66		15730	2.89	7653	9952			5.43	Si
SLU 76	-2.03	-29788	5049	-3944.79		22905	2.89	8610	11197			2.22	Si
SLU 76	0.67	-19403	1956	2879.57		14920	2.89	7545	9812			5.02	Si
SLU 84	-2.03	-30677	5194	-4127.85		23589	2.89	8701	11315			2.18	Si
SLU 84	0.67	-20292	1944	2943.94		15603	2.89	7636	9931			5.11	Si
SLU 80	-2.03	-30093	5058	-3952.01		23140	2.89	8641	11237			2.22	Si
SLU 80	0.67	-19708	1907	2917.36		15154	2.89	7576	9853			5.17	Si
SLU 78	-2.03	-30127	5069	-3981.9		23166	2.89	8644	11242			2.22	Si
SLU 78	0.67	-19741	1907	2915.57		15180	2.89	7580	9857			5.17	Si
SLU 77	-2.03	-30246	5012	-3952.58		23257	2.89	8657	11258			2.25	Si
SLU 77	0.67	-19905	1797	2907.28		15306	2.89	7596	9879			5.5	Si

Verifica a taglio nel piano secondo D.M. 17-01-18 (N.T.C.) §7.8.2.2.2 con rottura per scorrimento in combinazioni sismiche, γM = 2

Comb.	Quota	N	V par	M	σ0	σN	l'	fvd	Vt scorr.	Vt fess.diag.	Vt,lim	c.s.	Verifica
SLV 6	-2.03	-39652	9554	-2614.62		30490	2.89	14431	18768			1.96	Si
SLV 6	0.67	-25425	4976	197.41		19550	2.89	12243	15922			3.2	Si
SLV 2	-2.03	-34234	10154	2076.02		26324	2.89	13598	17684			1.74	Si
SLV 2	0.67	-23807	8264	-2056.26		18306	2.89	11995	15599			1.89	Si
SLV 15	-2.03	-9105	-3151	-7424.26		10713	1.8887	10476	8904			2.83	Si
SLV 15	0.67	-3783	-5763	6152.19		0	0	8333	0			0	No, Vu<V
SLV 16	-2.03	-9105	-3151	-7424.26		10713	1.8887	10476	8904			2.83	Si
SLV 16	0.67	-3783	-5763	6152.19		0	0	8333	0			0	No, Vu<V
SLV 1	-2.03	-34234	10154	2076.02		26324	2.89	13598	17684			1.74	Si
SLV 1	0.67	-23807	8264	-2056.26		18306	2.89	11995	15599			1.89	Si
SLV 4	-2.03	-24863	7479	2976.39		19119	2.89	12157	15810			2.11	Si
SLV 4	0.67	-18120	7195	-1647.94		13933	2.89	11120	14461			2.01	Si
SLV 12	-2.03	-3688	-2551	-2733.61		3882	2.1111	9110	8654			3.39	Si
SLV 12	0.67	-2166	-2475	3898.52		0	0	8333	0			0	No, Vu<V
SLV 5	-2.03	-39652	9554	-2614.62		30490	2.89	14431	18768			1.96	Si
SLV 5	0.67	-25425	4976	197.41		19550	2.89	12243	15922			3.2	Si
SLV 3	-2.03	-24863	7479	2976.39		19119	2.89	12157	15810			2.11	Si
SLV 3	0.67	-18120	7195	-1647.94		13933	2.89	11120	14461			2.01	Si
SLV 11	-2.03	-3688	-2551	-2733.61		3882	2.1111	9110	8654			3.39	Si
SLV 11	0.67	-2166	-2475	3898.52		0	0	8333	0			0	No, Vu<V

Verifica a pressoflessione fuori piano D.M. 17-01-18 (N.T.C.)

quota -0.68 Wa 0.08 denominatore 8 γM = 2

Comb.	fd	Sa	σ0	N	M	Mc	Coeff.s.	Verifica
SLV 12	143750	0.24	2581	-3357	173.72	739.27	4.26	Si
SLV 11	143750	0.24	2581	-3357	173.72	739.27	4.26	Si
SLV 15	143750	0.24	4486	-5834	173.72	1264.45	7.28	Si
SLV 16	143750	0.24	4486	-5834	173.72	1264.45	7.28	Si
SLV 8	143750	0.24	6027	-7839	173.72	1676.68	9.65	Si
SLV 7	143750	0.24	6027	-7839	173.72	1676.68	9.65	Si
SLV 14	143750	0.24	9565	-12439	173.72	2579.77	14.85	Si
SLV 13	143750	0.24	9565	-12439	173.72	2579.77	14.85	Si
SLV 3	143750	0.24	15974	-20774	173.72	4063.08	23.39	Si
SLV 4	143750	0.24	15974	-20774	173.72	4063.08	23.39	Si

Verifica dei meccanismi locali di collasso con analisi cinematica lineare

forza di aggancio al piano = 0 quota mezzeria = -0.68 Wa = 0.08 Ta = 0.0271

Comb.	N top	N base	V orto	α0	M*	e*	a0*	aLim	Verifica
SLV 9	-21124	-34924	-1595	0.029	2647.7	0.946	0.43771	3.33245	No
SLV 10	-21124	-34924	-1595	0.029	2647.7	0.946	0.43771	3.33245	No
SLV 5	-25425	-39652	-1807	0.029	3084.4	0.953	0.44699	3.33245	No
SLV 6	-25425	-39652	-1807	0.029	3084.4	0.953	0.44699	3.33245	No
SLV 11	-2166	-3688	526	0.034	771.9	0.892	0.55479	3.33245	No
SLV 12	-2166	-3688	526	0.034	771.9	0.892	0.55479	3.33245	No
SLV 2	-23807	-34234	-1313	0.044	2920.1	0.951	0.67862	3.47592	No
SLV 1	-23807	-34234	-1313	0.044	2920.1	0.951	0.67862	3.47592	No
SLV 14	-9471	-18476	-605	0.056	1471.7	0.914	0.8953	3.47592	No
SLV 13	-9471	-18476	-605	0.056	1471.7	0.914	0.8953	3.47592	No

Tabella dei coefficienti di sicurezza minimi

Stato limite	Coeff.s.	Comb.	Verifica
PF_SLU	7.629	SLU 84	Si
V_SLU	2.178	SLU 84	Si
PF_SLV	0	SLV 11	No
V_SLV	0	SLV 11	No
PFFP_SLV	4.256	SLV 11	Si
R_SLV	0.131	SLV 9	No

Maschio 13

Verifiche condotte secondo D.M. 17-01-18 (N.T.C.)

Dati geometrici

X ini.	Y ini.	X fin.	Y fin.	Quota i.	Quota.s	l	Sp.	h netta	h ini.	h fin.	a	a.s.,sx	a.s.,dx
-15.058	2.238	-15.058	6.483	L1	L3	4.245	0.3	2.7	2.7	2.7			

Caratteristiche del materiale

(Circolare 7 21-01-19 C8.5.I) Muratura in mattoni pieni e malta di calce LC2_Corti

fb	fk	fvk0	fmedio	τ0	fv0	μ	ϕ	fv,lim	E	G	FC
600000			345000	9000	20000	0.58	0.77	32500	320000000	128000000	1.2

Verifica a pressoflessione nel piano secondo D.M. 17-01-18 NTC §7.8.2.2.1 in combinazioni non sismiche, γM = 3

Comb.	Quota	N	M	σ0	Mu	c.s.	Verifica
SLU 58	-2.03	-45957	163.37	36090	54323.56	332.517	Si
SLU 58	0.67	-41234	4212.6	32381	52725.25	12.516	Si
SLU 9	-2.03	-32999	412.4	25914	47755.58	115.8	Si
SLU 9	0.67	-29407	3357.5	23093	44718.38	13.319	Si
SLU 49	-2.03	-41578	444	32651	52872.35	119.081	Si
SLU 49	0.67	-36874	4097.12	28957	50439.74	12.311	Si
SLU 50	-2.03	-41122	541.52	32293	52676.4	97.276	Si
SLU 50	0.67	-36360	4177.7	28554	50119.16	11.997	Si
SLU 57	-2.03	-46413	65.86	36448	54429.41	826.49	Si
SLU 57	0.67	-41748	4132.02	32784	52943.36	12.813	Si
SLU 48	-2.03	-41584	425.14	32656	52875.19	124.373	Si
SLU 48	0.67	-36880	4079.77	28962	50443.35	12.364	Si
SLU 47	-2.03	-40938	256.27	32148	52594.68	205.228	Si
SLU 47	0.67	-36139	3779.01	28379	49977.39	13.225	Si
SLU 59	-2.03	-45951	182.24	36085	54321.93	298.084	Si
SLU 59	0.67	-41228	4229.95	32376	52722.69	12.464	Si
SLU 56	-2.03	-46420	46.99	36453	54430.91	1000	Si
SLU 56	0.67	-41754	4114.67	32789	52945.79	12.868	Si
SLU 51	-2.03	-41115	560.38	32288	52673.43	93.995	Si
SLU 51	0.67	-36354	4195.04	28549	50115.43	11.946	Si

Verifica a pressoflessione nel piano secondo D.M. 17-01-18 NTC §7.8.2.2.1 in combinazioni sismiche, γM = 2

Comb.	Quota	N	M	σ0	Mu	c.s.	Verifica
SLV 16	-2.03	-8668	27998.76	0	0	0	No, e>l/2
SLV 16	0.67	-6770	26950.17	0	0	0	No, e>l/2
SLV 5	-2.03	-62915	-44472.95	49407	79535.39	1.788	Si
SLV 5	0.67	-52590	-35211.46	41298	73889.19	2.098	Si
SLV 9	-2.03	-50695	-34353.79	39811	72537.44	2.111	Si
SLV 9	0.67	-40165	-26479.77	31542	63239.51	2.388	Si
SLV 10	-2.03	-50695	-34353.79	39811	72537.44	2.111	Si
SLV 10	0.67	-40165	-26479.77	31542	63239.51	2.388	Si
SLV 6	-2.03	-62915	-44472.95	49407	79535.39	1.788	Si
SLV 6	0.67	-52590	-35211.46	41298	73889.19	2.098	Si
SLV 12	-2.03	-7971	43410.61	0	0	0	No, e>l/2
SLV 12	0.67	-11088	40047.88	0	0	0	No, e>l/2
SLV 11	-2.03	-7971	43410.61	0	0	0	No, e>l/2
SLV 11	0.67	-11088	40047.88	0	0	0	No, e>l/2
SLV 7	-2.03	-20190	33291.45	15855	37290.56	1.12	Si
SLV 7	0.67	-23513	31316.19	18464	42361.13	1.353	Si
SLV 8	-2.03	-20190	33291.45	15855	37290.56	1.12	Si
SLV 8	0.67	-23513	31316.19	18464	42361.13	1.353	Si
SLV 15	-2.03	-8668	27998.76	0	0	0	No, e>l/2
SLV 15	0.67	-6770	26950.17	0	0	0	No, e>l/2

Verifica a taglio nel piano secondo D.M. 17-01-18 (N.T.C.) §7.8.2.2.2 con rottura per scorrimento in combinazioni non sismiche, γM = 3

Comb.	Quota	N	V par	M	σ0	σN	l'	fvd	Vt scorr.	Vt fess.diag.	Vt,lim	c.s.	Verifica
SLU 82	-2.03	-52582	437	-1254.69		41292	4.2447	10833	13795			31.59	Si
SLU 82	0.67	-47995	2900	3121.19		37690	4.2447	10581	13474			4.65	Si
SLU 74	-2.03	-51152	410	-911.19		40169	4.2447	10833	13795			33.65	Si
SLU 74	0.67	-46643	2829	3418.56		36629	4.2447	10439	13294			4.7	Si
SLU 84	-2.03	-52755	426	-938.01		41428	4.2447	10833	13795			32.39	Si
SLU 84	0.67	-48207	2922	3548.79		37856	4.2447	10603	13502			4.62	Si
SLU 78	-2.03	-51318	402	-575.64		40300	4.2447	10833	13795			34.3	Si
SLU 78	0.67	-46850	2855	3863.5		36791	4.2447	10461	13321			4.67	Si
SLU 79	-2.03	-50863	394	-478.12		39942	4.2447	10833	13795			35.05	Si
SLU 79	0.67	-46336	2824	3944.08		36387	4.2447	10407	13253			4.69	Si
SLU 83	-2.03	-52762	423	-956.87		41433	4.2447	10833	13795			32.62	Si
SLU 83	0.67	-48212	2918	3531.44		37861	4.2447	10604	13503			4.63	Si
SLU 75	-2.03	-51145	413	-892.32		40164	4.2447	10833	13795			33.41	Si
SLU 75	0.67	-46638	2833	3435.91		36624	4.2447	10439	13293			4.69	Si
SLU 80	-2.03	-50856	397	-459.26		39937	4.2447	10833	13795			34.79	Si
SLU 80	0.67	-46330	2828	3961.43		36383	4.2447	10407	13252			4.69	Si
SLU 77	-2.03	-51325	399	-594.5		40305	4.2447	10833	13795			34.55	Si
SLU 77	0.67	-46856	2851	3846.16		36795	4.2447	10462	13322			4.67	Si
SLU 81	-2.03	-52589	434	-1273.56		41298	4.2447	10833	13795			31.81	Si
SLU 81	0.67	-48000	2896	3103.85		37694	4.2447	10581	13475			4.65	Si

Verifica a taglio nel piano secondo D.M. 17-01-18 (N.T.C.) §7.8.2.2.2 con rottura per scorrimento in combinazioni sismiche, γM = 2

Comb.	Quota	N	V par	M	σ0	σN	l'	fvd	Vt scorr.	Vt fess.diag.	Vt,lim	c.s.	Verifica
SLV 9	-2.03	-50695	-13890	-34353.79		39811	4.2447	16250	20693			1.49	Si
SLV 9	0.67	-40165	-14962	-26479.77		31542	4.2447	14642	18645			1.25	Si
SLV 5	-2.03	-62915	-13919	-44472.95		49407	4.2447	16250	20693			1.49	Si
SLV 5	0.67	-52590	-15184	-35211.46		41298	4.2447	16250	20693			1.36	Si
SLV 15	-2.03	-8668	4595	27998.76		0	0	8333	0			0	No, Vu<V
SLV 15	0.67	-6770	7428	26950.17		0	0	8333	0			0	No, Vu<V
SLV 12	-2.03	-7971	14497	43410.61		0	0	8333	0			0	No, Vu<V
SLV 12	0.67	-11088	19085	40047.88		0	0	8333	0			0	No, Vu<V
SLV 10	-2.03	-50695	-13890	-34353.79		39811	4.2447	16250	20693			1.49	Si
SLV 10	0.67	-40165	-14962	-26479.77		31542	4.2447	14642	18645			1.25	Si

Comb.	Quota	N	V par	M	σ0	σN	l'	fvd	Vt scorr.	Vt fess.diag.	Vt,lim	c.s.	Verifica
SLV 11	-2.03	-7971	14497	43410.61		0	0	8333	0			0	No, Vu<V
SLV 11	0.67	-11088	19085	40047.88		0	0	8333	0			0	No, Vu<V
SLV 7	-2.03	-20190	14468	33291.45		47381	1.4204	16250	6925			0.48	No, Vu<V
SLV 7	0.67	-23513	18863	31316.19		33051	2.3714	14943	10631			0.56	No, Vu<V
SLV 16	-2.03	-8668	4595	27998.76		0	0	8333	0			0	No, Vu<V
SLV 16	0.67	-6770	7428	26950.17		0	0	8333	0			0	No, Vu<V
SLV 6	-2.03	-62915	-13919	-44472.95		49407	4.2447	16250	20693			1.49	Si
SLV 6	0.67	-52590	-15184	-35211.46		41298	4.2447	16250	20693			1.36	Si
SLV 8	-2.03	-20190	14468	33291.45		47381	1.4204	16250	6925			0.48	No, Vu<V
SLV 8	0.67	-23513	18863	31316.19		33051	2.3714	14943	10631			0.56	No, Vu<V

Verifica a pressoflessione fuori piano D.M. 17-01-18 (N.T.C.)

quota -0.68 Wa 0.05 denominatore 8 γM = 2

Comb.	fd	Sa	σ0	N	M	Mc	Coeff.s.	Verifica
SLV 16	143750	0.24	6603	-8408	170.1	1193.04	7.01	Si
SLV 15	143750	0.24	6603	-8408	170.1	1193.04	7.01	Si
SLV 12	143750	0.24	7674	-9772	170.1	1373.76	8.08	Si
SLV 11	143750	0.24	7674	-9772	170.1	1373.76	8.08	Si
SLV 13	143750	0.24	15004	-19106	170.1	2513.99	14.78	Si
SLV 14	143750	0.24	15004	-19106	170.1	2513.99	14.78	Si
SLV 7	143750	0.24	16993	-21639	170.1	2794.49	16.43	Si
SLV 8	143750	0.24	16993	-21639	170.1	2794.49	16.43	Si
SLV 10	143750	0.24	35678	-45432	170.1	4824.98	28.37	Si
SLV 9	143750	0.24	35678	-45432	170.1	4824.98	28.37	Si

Verifica dei meccanismi locali di collasso con analisi cinematica lineare

forza di aggancio al piano = 0 quota mezzeria = -0.68 Wa = 0.05 Ta = 0.0406

Comb.	N top	N base	V orto	α0	M*	e*	a0*	aLim	Verifica
SLV 3	-48185	-49400	826	0.043	5389.9	0.972	0.63971	4.36108	No
SLV 4	-48185	-49400	826	0.043	5389.9	0.972	0.63971	4.36108	No
SLV 1	-56908	-62218	876	0.044	6278.4	0.976	0.65254	4.36108	No
SLV 2	-56908	-62218	876	0.044	6278.4	0.976	0.65254	4.36108	No
SLV 8	-23513	-20190	447	0.045	2879.7	0.951	0.69081	4.07946	No
SLV 7	-23513	-20190	447	0.045	2879.7	0.951	0.69081	4.07946	No
SLV 5	-52590	-62915	613	0.048	5838.5	0.974	0.71042	4.07946	No
SLV 6	-52590	-62915	613	0.048	5838.5	0.974	0.71042	4.07946	No
SLV 9	-40165	-50695	338	0.052	4573.3	0.968	0.77645	4.07946	No
SLV 10	-40165	-50695	338	0.052	4573.3	0.968	0.77645	4.07946	No

Tabella dei coefficienti di sicurezza minimi

Stato limite	Coeff.s.	Comb.	Verifica
PF_SLU	11.946	SLU 51	Si
V_SLU	4.621	SLU 84	Si
PF_SLV	0	SLV 11	No
V_SLV	0	SLV 11	No
PFFP_SLV	7.014	SLV 15	Si
R_SLV	0.147	SLV 3	No

Maschio 14

Verifiche condotte secondo D.M. 17-01-18 (N.T.C.)

Dati geometrici

X ini.	Y ini.	X fin.	Y fin.	Quota i.	Quota.s	l	Sp.	h netta	h ini.	h fin.	a	a.s.,sx	a.s.,dx
-13.763	-4.725	-13.763	-3.32	L1	L2	1.405	0.3	2.03	2.03	2.03			

Caratteristiche del materiale

(Circolare 7 21-01-19 C8.5.I) Muratura in mattoni pieni e malta di calce LC2_Corti

fb	fk	fvk0	fmedio	τ0	fv0	μ	ϕ	fv,lim	E	G	FC
600000			345000	9000	20000	0.58	0.77	32500	320000000	128000000	1.2

Verifica a pressoflessione nel piano secondo D.M. 17-01-18 NTC §7.8.2.2.1 in combinazioni non sismiche, γM = 3

Comb.	Quota	N	M	σ0	Mu	c.s.	Verifica
SLU 75	-2.03	-24099	467.13	57173	5047.46	10.805	Si
SLU 75	0	-27117	784.57	64331	4005.32	5.105	Si
SLU 81	-2.03	-24703	492.91	58606	4868.6	9.877	Si
SLU 81	0	-27717	846.14	65756	3753.53	4.436	Si
SLU 79	-2.03	-24234	470.81	57492	5008.86	10.639	Si
SLU 79	0	-27244	792.24	64635	3952.93	4.99	Si
SLU 82	-2.03	-24709	490.58	58619	4866.9	9.921	Si
SLU 82	0	-27781	843.45	65908	3725.74	4.417	Si
SLU 83	-2.03	-24926	498.18	59135	4798.84	9.633	Si
SLU 83	0	-28000	858.86	66427	3629.84	4.226	Si
SLU 74	-2.03	-24094	469.46	57160	5049.02	10.755	Si
SLU 74	0	-27052	787.26	64179	4031.37	5.121	Si
SLU 84	-2.03	-24932	495.84	59148	4797.09	9.675	Si
SLU 84	0	-28064	856.17	66579	3601.3	4.206	Si
SLU 80	-2.03	-24239	468.48	57506	5007.27	10.688	Si
SLU 80	0	-27309	789.55	64787	3926.38	4.973	Si
SLU 78	-2.03	-24322	472.39	57702	4983.21	10.549	Si
SLU 78	0	-27399	797.29	65002	3888.58	4.877	Si
SLU 77	-2.03	-24316	474.73	57689	4984.82	10.5	Si
SLU 77	0	-27335	799.98	64850	3915.36	4.894	Si

Verifica a pressoflessione nel piano secondo D.M. 17-01-18 NTC §7.8.2.2.1 in combinazioni sismiche, γM = 2

Comb.	Quota	N	M	σ0	Mu	c.s.	Verifica
SLV 13	-2.03	-24680	-321	58552	9029.94	28.131	Si
SLV 13	0	-23841	1313.79	56560	8995.78	6.847	Si
SLV 3	-2.03	-9142	924.92	21688	5282.42	5.711	Si
SLV 3	0	-14074	-359.98	33389	7185.47	19.961	Si
SLV 12	-2.03	-6816	1838.6	16170	4154.72	2.26	Si
SLV 12	0	-5442	218.82	12911	3419.36	15.626	Si
SLV 14	-2.03	-24680	-321	58552	9029.94	28.131	Si
SLV 14	0	-23841	1313.79	56560	8995.78	6.847	Si
SLV 7	-2.03	-4207	1927.76	9980	2713.8	1.408	Si
SLV 7	0	-4986	-199.23	11829	3163.73	15.88	Si
SLV 10	-2.03	-29616	-1323.84	70261	8841.94	6.679	Si
SLV 10	0	-32929	1153.04	78120	8343.02	7.236	Si
SLV 9	-2.03	-29616	-1323.84	70261	8841.94	6.679	Si
SLV 9	0	-32929	1153.04	78120	8343.02	7.236	Si
SLV 11	-2.03	-6816	1838.6	16170	4154.72	2.26	Si
SLV 11	0	-5442	218.82	12911	3419.36	15.626	Si
SLV 8	-2.03	-4207	1927.76	9980	2713.8	1.408	Si
SLV 8	0	-4986	-199.23	11829	3163.73	15.88	Si
SLV 4	-2.03	-9142	924.92	21688	5282.42	5.711	Si
SLV 4	0	-14074	-359.98	33389	7185.47	19.961	Si

Verifica a taglio nel piano secondo D.M. 17-01-18 (N.T.C.) §7.8.2.2.2 con rottura per scorrimento in combinazioni non sismiche, γM = 3

Comb.	Quota	N	V par	M	σ0	σN	l'	fvd	Vt scorr.	Vt fess.diag.	Vt,lim	c.s.	Verifica
SLU 78	-2.03	-24322	-6049	472.39		57702	1.405	10833	4566			0.75	No, Vu<V
SLU 78	0	-27399	-4088	797.29		65002	1.405	10833	4566			1.12	Si
SLU 77	-2.03	-24316	-6059	474.73		57689	1.405	10833	4566			0.75	No, Vu<V
SLU 77	0	-27335	-4087	799.98		64850	1.405	10833	4566			1.12	Si
SLU 74	-2.03	-24094	-5994	469.46		57160	1.405	10833	4566			0.76	No, Vu<V
SLU 74	0	-27052	-4051	787.26		64179	1.405	10833	4566			1.13	Si
SLU 84	-2.03	-24932	-6209	495.84		59148	1.405	10833	4566			0.74	No, Vu<V
SLU 84	0	-28064	-4250	856.17		66579	1.405	10833	4566			1.07	Si
SLU 81	-2.03	-24703	-6154	492.91		58606	1.405	10833	4566			0.74	No, Vu<V
SLU 81	0	-27717	-4214	846.14		65756	1.405	10833	4566			1.08	Si
SLU 79	-2.03	-24234	-6033	470.81		57492	1.405	10833	4566			0.76	No, Vu<V
SLU 79	0	-27244	-4070	792.24		64635	1.405	10833	4566			1.12	Si
SLU 80	-2.03	-24239	-6022	468.48		57506	1.405	10833	4566			0.76	No, Vu<V
SLU 80	0	-27309	-4070	789.55		64787	1.405	10833	4566			1.12	Si
SLU 82	-2.03	-24709	-6143	490.58		58619	1.405	10833	4566			0.74	No, Vu<V
SLU 82	0	-27781	-4215	843.45		65908	1.405	10833	4566			1.08	Si
SLU 75	-2.03	-24099	-5983	467.13		57173	1.405	10833	4566			0.76	No, Vu<V
SLU 75	0	-27117	-4052	784.57		64331	1.405	10833	4566			1.13	Si
SLU 83	-2.03	-24926	-6220	498.18		59135	1.405	10833	4566			0.73	No, Vu<V
SLU 83	0	-28000	-4250	858.86		66427	1.405	10833	4566			1.07	Si

Verifica a taglio nel piano secondo D.M. 17-01-18 (N.T.C.) §7.8.2.2.2 con rottura per scorrimento in combinazioni sismiche, γM = 2

Comb.	Quota	N	V par	M	σ0	σN	l'	fvd	Vt scorr.	Vt fess.diag.	Vt,lim	c.s.	Verifica
SLV 5	-2.03	-27006	-11945	-1234.68		64070	1.405	16250	6850			0.57	No, Vu<V
SLV 5	0	-32472	-10169	734.99		77038	1.405	16250	6850			0.67	No, Vu<V
SLV 8	-2.03	-4207	5035	1927.76		19136	0.7327	12161	2673			0.53	No, Vu<V
SLV 8	0	-4986	5784	-199.23		11829	1.405	10699	4510			0.78	No, Vu<V
SLV 11	-2.03	-6816	3635	1838.6		17500	1.2983	11833	4609			1.27	Si
SLV 11	0	-5442	4649	218.82		12911	1.405	10916	4601			0.99	No, Vu<V
SLV 10	-2.03	-29616	-13346	-1323.84		70261	1.405	16250	6850			0.51	No, Vu<V
SLV 10	0	-32929	-11304	1153.04		78120	1.405	16250	6850			0.61	No, Vu<V
SLV 12	-2.03	-6816	3635	1838.6		17500	1.2983	11833	4609			1.27	Si
SLV 12	0	-5442	4649	218.82		12911	1.405	10916	4601			0.99	No, Vu<V
SLV 14	-2.03	-24680	-9037	-321		58552	1.405	16250	6850			0.76	No, Vu<V
SLV 14	0	-23841	-7044	1313.79		56560	1.405	16250	6850			0.97	No, Vu<V
SLV 9	-2.03	-29616	-13346	-1323.84		70261	1.405	16250	6850			0.51	No, Vu<V
SLV 9	0	-32929	-11304	1153.04		78120	1.405	16250	6850			0.61	No, Vu<V
SLV 13	-2.03	-24680	-9037	-321		58552	1.405	16250	6850			0.76	No, Vu<V
SLV 13	0	-23841	-7044	1313.79		56560	1.405	16250	6850			0.97	No, Vu<V
SLV 7	-2.03	-4207	5035	1927.76		19136	0.7327	12161	2673			0.53	No, Vu<V
SLV 7	0	-4986	5784	-199.23		11829	1.405	10699	4510			0.78	No, Vu<V
SLV 6	-2.03	-27006	-11945	-1234.68		64070	1.405	16250	6850			0.57	No, Vu<V
SLV 6	0	-32472	-10169	734.99		77038	1.405	16250	6850			0.67	No, Vu<V

Verifica a pressoflessione fuori piano D.M. 17-01-18 (N.T.C.)

quota -1.015 Wa 0.05 denominatore 8 γM = 2

Comb.	fd	Sa	σ0	N	M	Mc	Coeff.s.	Verifica
SLV 7	143750	0.24	5977	-2519	31.83	359.41	11.29	Si
SLV 8	143750	0.24	5977	-2519	31.83	359.41	11.29	Si
SLV 12	143750	0.24	10802	-4553	31.83	622.59	19.56	Si
SLV 11	143750	0.24	10802	-4553	31.83	622.59	19.56	Si
SLV 3	143750	0.24	22709	-9572	31.83	1168.98	36.73	Si
SLV 4	143750	0.24	22709	-9572	31.83	1168.98	36.73	Si
SLV 15	143750	0.24	38793	-16352	31.83	1674.05	52.6	Si
SLV 16	143750	0.24	38793	-16352	31.83	1674.05	52.6	Si
SLV 2	143750	0.24	41877	-17652	31.83	1740.29	54.68	Si
SLV 1	143750	0.24	41877	-17652	31.83	1740.29	54.68	Si

Verifica dei meccanismi locali di collasso con analisi cinematica lineare

forza di aggancio al piano = 0 quota mezzeria = -1.015 Wa = 0.05 Ta = 0.0229

Comb.	N top	N base	V orto	α0	M*	e*	a0*	aLim	Verifica
SLV 13	-23841	-24680	-95	0.072	2548.6	0.985	1.0673	3.18636	No
SLV 14	-23841	-24680	-95	0.072	2548.6	0.985	1.0673	3.18636	No
SLV 9	-32929	-29616	-130	0.072	3474.9	0.989	1.05406	3.07653	No
SLV 10	-32929	-29616	-130	0.072	3474.9	0.989	1.05406	3.07653	No

Comb.	N top	N base	V orto	α0	M*	e*	a0*	aLim	Verifica
SLV 5	-32472	-27006	-115	0.072	3428.4	0.989	1.06045	3.07653	No
SLV 6	-32472	-27006	-115	0.072	3428.4	0.989	1.06045	3.07653	No
SLV 1	-22320	-15982	-45	0.074	2393.6	0.984	1.099	3.18636	No
SLV 2	-22320	-15982	-45	0.074	2393.6	0.984	1.099	3.18636	No
SLV 16	-15595	-17840	-50	0.074	1708.4	0.978	1.10416	3.18636	No
SLV 15	-15595	-17840	-50	0.074	1708.4	0.978	1.10416	3.18636	No

Tabella dei coefficienti di sicurezza minimi

Stato limite	Coeff.s.	Comb.	Verifica
PF_SLU	4.206	SLU 84	Si
V_SLU	0.734	SLU 83	No
PF_SLV	1.408	SLV 7	Si
V_SLV	0.513	SLV 9	No
PFFP_SLV	11.292	SLV 7	Si
R_SLV	0.335	SLV 13	No

Maschio 15

Verifiche condotte secondo D.M. 17-01-18 (N.T.C.)

Dati geometrici

X ini.	Y ini.	X fin.	Y fin.	Quota i.	Quota.s	l	Sp.	h netta	h ini.	h fin.	a	a.s.,sx	a.s.,dx
-13.763	-4.725	-13.763	-3.32	L2	L3	1.405	0.3	0.67	0.67	0.67			

Caratteristiche del materiale

(Circolare 7 21-01-19 C8.5.I) Muratura in mattoni pieni e malta di calce LC2_Corti

fb	fk	fvk0	fmedio	τ0	fv0	μ	ϕ	fv,lim	E	G	FC
600000			345000	9000	20000	0.58	0.77	32500	320000000	128000000	1.2

Verifica a pressoflessione nel piano secondo D.M. 17-01-18 NTC §7.8.2.2.1 in combinazioni non sismiche, γM = 3

Comb.	Quota	N	M	σ0	Mu	c.s.	Verifica
SLU 83	0	-32372	-3263.64	76800	1300.45	0.398	No, M>Mu
SLU 83	0.67	-31581	-1514.97	74922	1780.29	1.175	Si
SLU 75	0	-31469	-3151.3	74658	1845.72	0.586	No, M>Mu
SLU 75	0.67	-30714	-1479.15	72865	2276.13	1.539	Si
SLU 79	0	-31613	-3158.11	75000	1760.9	0.558	No, M>Mu
SLU 79	0.67	-30854	-1483.88	73199	2197.7	1.481	Si
SLU 77	0	-31717	-3161.9	75246	1699.23	0.537	No, M>Mu
SLU 77	0.67	-30958	-1479.04	73444	2139.62	1.447	Si
SLU 76	0	-31420	-3154.71	74541	1874.42	0.594	No, M>Mu
SLU 76	0.67	-30670	-1488.37	72761	2300.55	1.546	Si
SLU 84	0	-32455	-3274.43	76996	1249.14	0.381	No, M>Mu
SLU 84	0.67	-31669	-1521.52	75132	1727.75	1.136	Si
SLU 80	0	-31696	-3168.91	75195	1712.15	0.54	No, M>Mu
SLU 80	0.67	-30943	-1490.44	73410	2147.8	1.441	Si
SLU 82	0	-32124	-3253.04	76212	1453.59	0.447	No, M>Mu
SLU 82	0.67	-31336	-1515.08	74343	1923.03	1.269	Si
SLU 81	0	-32042	-3242.24	76017	1503.79	0.464	No, M>Mu
SLU 81	0.67	-31248	-1508.52	74132	1974.36	1.309	Si
SLU 78	0	-31800	-3172.7	75441	1650.13	0.52	No, M>Mu
SLU 78	0.67	-31047	-1485.6	73655	2089.34	1.406	Si

Verifica a pressoflessione nel piano secondo D.M. 17-01-18 NTC §7.8.2.2.1 in combinazioni sismiche, γM = 2

Comb.	Quota	N	M	σ0	Mu	c.s.	Verifica
SLV 8	0	-5787	1441.07	13728	3608.54	2.504	Si
SLV 8	0.67	-6586	-1179.62	15624	4034.94	3.421	Si
SLV 7	0	-5787	1441.07	13728	3608.54	2.504	Si
SLV 7	0.67	-6586	-1179.62	15624	4034.94	3.421	Si
SLV 10	0	-38491	-5872.83	91317	6831.9	1.163	Si
SLV 10	0.67	-36598	-985.72	86826	7440.89	7.549	Si
SLV 3	0	-15349	-421.05	36413	7569.4	17.977	Si
SLV 3	0.67	-17379	-2662.8	41230	8089.4	3.038	Si
SLV 4	0	-15349	-421.05	36413	7569.4	17.977	Si
SLV 4	0.67	-17379	-2662.8	41230	8089.4	3.038	Si
SLV 5	0	-37249	-5412.78	88369	7242.67	1.338	Si
SLV 5	0.67	-36789	-2008.39	87278	7383.99	3.677	Si
SLV 13	0	-28929	-4010.7	68632	8907.89	2.221	Si
SLV 13	0.67	-25805	497.46	61219	9045.56	18.183	Si
SLV 14	0	-28929	-4010.7	68632	8907.89	2.221	Si
SLV 14	0.67	-25805	497.46	61219	9045.56	18.183	Si
SLV 6	0	-37249	-5412.78	88369	7242.67	1.338	Si
SLV 6	0.67	-36789	-2008.39	87278	7383.99	3.677	Si
SLV 9	0	-38491	-5872.83	91317	6831.9	1.163	Si
SLV 9	0.67	-36598	-985.72	86826	7440.89	7.549	Si

Verifica a taglio nel piano secondo D.M. 17-01-18 (N.T.C.) §7.8.2.2.2 con rottura per scorrimento in combinazioni non sismiche, γM = 3

Comb.	Quota	N	V par	M	σ0	σN	l'	fvd	Vt scorr.	Vt fess.diag.	Vt,lim	c.s.	Verifica
SLU 79	0	-31613	-3011	-3158.11		75000	1.405	10833	4566			1.52	Si
SLU 79	0.67	-30854	-2084	-1483.88		73199	1.405	10833	4566			2.19	Si
SLU 82	0	-32124	-3147	-3253.04		76212	1.405	10833	4566			1.45	Si
SLU 82	0.67	-31336	-2196	-1515.08		74343	1.405	10833	4566			2.08	Si
SLU 77	0	-31717	-3026	-3161.9		75246	1.405	10833	4566			1.51	Si
SLU 77	0.67	-30958	-2096	-1479.04		73444	1.405	10833	4566			2.18	Si
SLU 74	0	-31387	-3001	-3140.51		74462	1.405	10833	4566			1.52	Si
SLU 74	0.67	-30625	-2081	-1472.59		72655	1.405	10833	4566			2.19	Si
SLU 84	0	-32455	-3172	-3274.43		76996	1.405	10833	4566			1.44	Si
SLU 84	0.67	-31669	-2211	-1521.52		75132	1.405	10833	4566			2.07	Si

Comb.	Quota	N	V par	M	σ0	σN	l'	fvd	Vt scorr.	Vt fess.diag.	Vt,lim	c.s.	Verifica
SLU 78	0	-31800	-3027	-3172.7		75441	1.405	10833	4566			1.51	Si
SLU 78	0.67	-31047	-2094	-1485.6		73655	1.405	10833	4566			2.18	Si
SLU 81	0	-32042	-3146	-3242.24		76017	1.405	10833	4566			1.45	Si
SLU 81	0.67	-31248	-2198	-1508.52		74132	1.405	10833	4566			2.08	Si
SLU 80	0	-31696	-3013	-3168.91		75195	1.405	10833	4566			1.52	Si
SLU 80	0.67	-30943	-2081	-1490.44		73410	1.405	10833	4566			2.19	Si
SLU 75	0	-31469	-3003	-3151.3		74658	1.405	10833	4566			1.52	Si
SLU 75	0.67	-30714	-2079	-1479.15		72865	1.405	10833	4566			2.2	Si
SLU 83	0	-32372	-3171	-3263.64		76800	1.405	10833	4566			1.44	Si
SLU 83	0.67	-31581	-2213	-1514.97		74922	1.405	10833	4566			2.06	Si

Verifica a taglio nel piano secondo D.M. 17-01-18 (N.T.C.) §7.8.2.2.2 con rottura per scorrimento in combinazioni sismiche, γM = 2

Comb.	Quota	N	V par	M	σ0	σN	l'	fvd	Vt scorr.	Vt fess.diag.	Vt,lim	c.s.	Verifica
SLV 8	0	-5787	5357	1441.07		14178	1.3605	11169	4559			0.85	No, Vu<V
SLV 8	0.67	-6586	6069	-1179.62		15624	1.405	11458	4830			0.8	No, Vu<V
SLV 14	0	-28929	-5344	-4010.7		68632	1.405	16250	6850			1.28	Si
SLV 14	0.67	-25805	-5577	497.46		61219	1.405	16250	6850			1.23	Si
SLV 12	0	-7029	4619	981.03		16676	1.405	11669	4918			1.06	Si
SLV 12	0.67	-6395	4768	-156.95		15171	1.405	11368	4792			1.01	Si
SLV 6	0	-37249	-8644	-5412.78		88369	1.405	16250	6850			0.79	No, Vu<V
SLV 6	0.67	-36789	-7510	-2008.39		87278	1.405	16250	6850			0.91	No, Vu<V
SLV 10	0	-38491	-9382	-5872.83		91317	1.405	16250	6850			0.73	No, Vu<V
SLV 10	0.67	-36598	-8811	-985.72		86826	1.405	16250	6850			0.78	No, Vu<V
SLV 7	0	-5787	5357	1441.07		14178	1.3605	11169	4559			0.85	No, Vu<V
SLV 7	0.67	-6586	6069	-1179.62		15624	1.405	11458	4830			0.8	No, Vu<V
SLV 11	0	-7029	4619	981.03		16676	1.405	11669	4918			1.06	Si
SLV 11	0.67	-6395	4768	-156.95		15171	1.405	11368	4792			1.01	Si
SLV 5	0	-37249	-8644	-5412.78		88369	1.405	16250	6850			0.79	No, Vu<V
SLV 5	0.67	-36789	-7510	-2008.39		87278	1.405	16250	6850			0.91	No, Vu<V
SLV 9	0	-38491	-9382	-5872.83		91317	1.405	16250	6850			0.73	No, Vu<V
SLV 9	0.67	-36598	-8811	-985.72		86826	1.405	16250	6850			0.78	No, Vu<V
SLV 13	0	-28929	-5344	-4010.7		68632	1.405	16250	6850			1.28	Si
SLV 13	0.67	-25805	-5577	497.46		61219	1.405	16250	6850			1.23	Si

Verifica a pressoflessione fuori piano D.M. 17-01-18 (N.T.C.)

quota 0.335 Wa 0.05 denominatore 8 γM = 2

Comb.	fd	Sa	σ0	N	M	Mc	Coeff.s.	Verifica
SLV 8	143750	0.25	19536	-8235	3.57	1037.7	290.75	Si
SLV 7	143750	0.25	19536	-8235	3.57	1037.7	290.75	Si
SLV 11	143750	0.25	19901	-8389	3.57	1053.36	295.14	Si
SLV 12	143750	0.25	19901	-8389	3.57	1053.36	295.14	Si
SLV 9	143750	0.25	84115	-35455	3.57	1657.15	464.32	Si
SLV 10	143750	0.25	84115	-35455	3.57	1657.15	464.32	Si
SLV 5	143750	0.25	83749	-35301	3.57	1665.79	466.74	Si
SLV 6	143750	0.25	83749	-35301	3.57	1665.79	466.74	Si
SLV 3	143750	0.25	41584	-17528	3.57	1734.42	485.97	Si
SLV 4	143750	0.25	41584	-17528	3.57	1734.42	485.97	Si

Verifica dei meccanismi locali di collasso con analisi cinematica lineare

forza di aggancio al piano = 0 quota mezzeria = 0.335 Wa = 0.05 Ta = 0.0025

Comb.	N top	N base	V orto	α0	M*	e*	a0*	aLim	Verifica
SLV 9	-36598	-38491	188	0.22	3769.6	0.997	3.21315	2.52374	Si
SLV 10	-36598	-38491	188	0.22	3769.6	0.997	3.21315	2.52374	Si
SLV 13	-25805	-28929	132	0.221	2669.4	0.995	3.22713	2.53248	Si
SLV 14	-25805	-28929	132	0.221	2669.4	0.995	3.22713	2.53248	Si
SLV 6	-36789	-37249	181	0.221	3789	0.997	3.21614	2.52374	Si
SLV 5	-36789	-37249	181	0.221	3789	0.997	3.21614	2.52374	Si
SLV 1	-26440	-24787	109	0.222	2734.2	0.995	3.24064	2.53248	Si
SLV 2	-26440	-24787	109	0.222	2734.2	0.995	3.24064	2.53248	Si
SLV 16	-16744	-19491	78	0.223	1745.8	0.993	3.25948	2.53248	Si
SLV 15	-16744	-19491	78	0.223	1745.8	0.993	3.25948	2.53248	Si

Tabella dei coefficienti di sicurezza minimi

Stato limite	Coeff.s.	Comb.	Verifica
PF_SLU	0.381	SLU 84	No
V_SLU	1.44	SLU 84	Si
PF_SLV	1.163	SLV 9	Si
V_SLV	0.73	SLV 9	No
PFFP_SLV	290.755	SLV 7	Si
R_SLV	1.273	SLV 9	Si

Maschio 17

Verifiche condotte secondo D.M. 17-01-18 (N.T.C.)

Dati geometrici

X ini.	Y ini.	X fin.	Y fin.	Quota i.	Quota.s	l	Sp.	h netta	h ini.	h fin.	a	a.s.,sx	a.s.,dx
-13.763	-3.32	-13.763	1.046	Z medio -101 cm	L3	4.366	0.3	1.685	0.67	2.7			

Caratteristiche del materiale

(Circolare 7 21-01-19 C8.5.I) Muratura in mattoni pieni e malta di calce LC2_Corti

fb	fk	fvk0	fmedio	τ0	fv0	μ	ϕ	fv,lim	E	G	FC
600000			345000	9000	20000	0.58	0.77	32500	320000000	128000000	1.2

Verifica a pressoflessione nel piano secondo D.M. 17-01-18 NTC §7.8.2.2.1 in combinazioni non sismiche, γM = 3

Comb.	Quota	N	M	σ0	Mu	c.s.	Verifica
SLU 55	0	-72729	-302.12	55522	50555.99	167.337	Si
SLU 55	0.67	-70092	-4629.01	53509	52504.86	11.343	Si
SLU 61	0	-75145	157.37	57366	48521.06	308.321	Si
SLU 61	0.67	-72411	-4403.3	55279	50806.35	11.538	Si
SLU 52	0	-71457	-533.95	54551	51531.47	96.51	Si
SLU 52	0.67	-68822	-4809.87	52539	53341.79	11.09	Si
SLU 47	0	-64466	-1552.39	49214	55711.28	35.887	Si
SLU 47	0.67	-62054	-5250.34	47372	56689.17	10.797	Si
SLU 65	0	-70348	-564.77	53705	52327.73	92.654	Si
SLU 65	0.67	-67784	-4734.98	51747	53976.61	11.4	Si
SLU 49	0	-66409	-1044.63	50698	54749.96	52.411	Si
SLU 49	0.67	-63996	-4831.41	48855	55920.52	11.574	Si
SLU 44	0	-63194	-1784.22	48243	56256.65	31.53	Si
SLU 44	0.67	-60784	-5431.2	46403	57108.39	10.515	Si
SLU 43	0	-63559	-1395.49	48522	56106.71	40.206	Si
SLU 43	0.67	-61144	-5080.48	46677	56996.34	11.219	Si
SLU 46	0	-65137	-1276.46	49727	55396.5	43.398	Si
SLU 46	0.67	-62726	-5012.28	47885	56440.65	11.26	Si
SLU 51	0	-65884	-1165.07	50296	55025.17	47.229	Si
SLU 51	0.67	-63468	-4929.19	48452	56144.83	11.39	Si

Verifica a pressoflessione nel piano secondo D.M. 17-01-18 NTC §7.8.2.2.1 in combinazioni sismiche, γM = 2

Comb.	Quota	N	M	σ0	Mu	c.s.	Verifica
SLV 12	0	-61488	24647.72	46940	82669.27	3.354	Si
SLV 12	0.67	-59817	14607.71	45665	81786.21	5.599	Si
SLV 9	0	-58484	-20184.3	44647	81027.04	4.014	Si
SLV 9	0.67	-56061	-18204.69	42797	79522.73	4.368	Si
SLV 2	0	-38727	-14364.05	29564	64090.63	4.462	Si
SLV 2	0.67	-36739	-13434.89	28047	61796.83	4.6	Si
SLV 1	0	-38727	-14364.05	29564	64090.63	4.462	Si
SLV 1	0.67	-36739	-13434.89	28047	61796.83	4.6	Si
SLV 7	0	-51884	20091.89	39608	76553.63	3.81	Si
SLV 7	0.67	-50292	11508.69	38394	75297.28	6.543	Si
SLV 10	0	-58484	-20184.3	44647	81027.04	4.014	Si
SLV 10	0.67	-56061	-18204.69	42797	79522.73	4.368	Si
SLV 8	0	-51884	20091.89	39608	76553.63	3.81	Si
SLV 8	0.67	-50292	11508.69	38394	75297.28	6.543	Si
SLV 5	0	-48880	-24740.13	37315	74124.43	2.996	Si
SLV 5	0.67	-46536	-21303.71	35526	72057.78	3.382	Si
SLV 11	0	-61488	24647.72	46940	82669.27	3.354	Si
SLV 11	0.67	-59817	14607.71	45665	81786.21	5.599	Si
SLV 6	0	-48880	-24740.13	37315	74124.43	2.996	Si
SLV 6	0.67	-46536	-21303.71	35526	72057.78	3.382	Si

Verifica a taglio nel piano secondo D.M. 17-01-18 (N.T.C.) §7.8.2.2.2 con rottura per scorrimento in combinazioni non sismiche, γM = 3

Comb.	Quota	N	V par	M	σ0	σN	I'	fvd	Vt scorr.	Vt fess.diag.	Vt,lim	c.s.	Verifica
SLU 81	0	-82519	2336	1610.07		62996	4.3664	10833	14191			6.08	Si
SLU 81	0.67	-79627	1637	-3496.65		60788	4.3664	10833	14191			8.67	Si
SLU 73	0	-78612	2239	685.51		60013	4.3664	10833	14191			6.34	Si
SLU 73	0.67	-75823	1566	-4113.65		57884	4.3664	10833	14191			9.06	Si
SLU 78	0	-81828	2237	1425.1		62468	4.3664	10833	14191			6.34	Si
SLU 78	0.67	-79034	1553	-3513.87		60336	4.3664	10833	14191			9.14	Si
SLU 75	0	-80556	2233	1193.27		61497	4.3664	10833	14191			6.35	Si
SLU 75	0.67	-77764	1555	-3694.73		59366	4.3664	10833	14191			9.12	Si
SLU 76	0	-79884	2243	917.34		60984	4.3664	10833	14191			6.33	Si
SLU 76	0.67	-77092	1564	-3932.79		58853	4.3664	10833	14191			9.08	Si
SLU 84	0	-83572	2374	1608.66		63799	4.3664	10833	14191			5.98	Si
SLU 84	0.67	-80681	1666	-3526.22		61593	4.3664	10833	14191			8.52	Si
SLU 80	0	-81302	2223	1304.66		62067	4.3664	10833	14191			6.38	Si
SLU 80	0.67	-78506	1540	-3611.64		59932	4.3664	10833	14191			9.22	Si
SLU 82	0	-82300	2370	1376.83		62828	4.3664	10833	14191			5.99	Si
SLU 82	0.67	-79411	1668	-3707.08		60623	4.3664	10833	14191			8.51	Si
SLU 83	0	-83791	2340	1841.9		63967	4.3664	10833	14191			6.07	Si
SLU 83	0.67	-80897	1634	-3315.79		61758	4.3664	10833	14191			8.68	Si
SLU 77	0	-82047	2203	1658.34		62635	4.3664	10833	14191			6.44	Si
SLU 77	0.67	-79250	1521	-3303.43		60500	4.3664	10833	14191			9.33	Si

Verifica a taglio nel piano secondo D.M. 17-01-18 (N.T.C.) §7.8.2.2.2 con rottura per scorrimento in combinazioni sismiche, γM = 2

Comb.	Quota	N	V par	M	σ0	σN	I'	fvd	Vt scorr.	Vt fess.diag.	Vt,lim	c.s.	Verifica
SLV 9	0	-58484	-22353	-20184.3		44647	4.3664	16250	21286			0.95	No, Vu<V
SLV 9	0.67	-56061	-21955	-18204.69		42797	4.3664	16250	21286			0.97	No, Vu<V
SLV 10	0	-58484	-22353	-20184.3		44647	4.3664	16250	21286			0.95	No, Vu<V
SLV 10	0.67	-56061	-21955	-18204.69		42797	4.3664	16250	21286			0.97	No, Vu<V
SLV 8	0	-51884	25269	20091.89		39608	4.3664	16250	21286			0.84	No, Vu<V
SLV 8	0.67	-50292	23933	11508.69		38394	4.3664	16012	20974			0.88	No, Vu<V
SLV 12	0	-61488	24186	24647.72		46940	4.3664	16250	21286			0.88	No, Vu<V
SLV 12	0.67	-59817	23657	14607.71		45665	4.3664	16250	21286			0.9	No, Vu<V
SLV 4	0	-39628	10243	-914.45		30252	4.3664	14384	18841			1.84	Si
SLV 4	0.67	-37865	8290	-3591.16		28907	4.3664	14115	18489			2.23	Si
SLV 6	0	-48880	-21270	-24740.13		37315	4.3664	15796	20692			0.97	No, Vu<V
SLV 6	0.67	-46536	-21679	-21303.71		35526	4.3664	15439	20223			0.93	No, Vu<V
SLV 11	0	-61488	24186	24647.72		46940	4.3664	16250	21286			0.88	No, Vu<V
SLV 11	0.67	-59817	23657	14607.71		45665	4.3664	16250	21286			0.9	No, Vu<V
SLV 7	0	-51884	25269	20091.89		39608	4.3664	16250	21286			0.84	No, Vu<V
SLV 7	0.67	-50292	23933	11508.69		38394	4.3664	16012	20974			0.88	No, Vu<V
SLV 5	0	-48880	-21270	-24740.13		37315	4.3664	15796	20692			0.97	No, Vu<V
SLV 5	0.67	-46536	-21679	-21303.71		35526	4.3664	15439	20223			0.93	No, Vu<V
SLV 3	0	-39628	10243	-914.45		30252	4.3664	14384	18841			1.84	Si
SLV 3	0.67	-37865	8290	-3591.16		28907	4.3664	14115	18489			2.23	Si

Verifica a pressoflessione fuori piano D.M. 17-01-18 (N.T.C.)

quota 0.335 Wa 0.05 denominatore 8 γM = 2

Comb.	fd	Sa	σ0	N	M	Mc	Coeff.s.	Verifica
SLV 2	143750	0.25	28874	-37822	70.15	4332.67	61.76	Si
SLV 1	143750	0.25	28874	-37822	70.15	4332.67	61.76	Si
SLV 4	143750	0.25	29370	-38472	70.15	4383.67	62.49	Si
SLV 3	143750	0.25	29370	-38472	70.15	4383.67	62.49	Si
SLV 5	143750	0.25	36895	-48329	70.15	5060.4	72.14	Si
SLV 6	143750	0.25	36895	-48329	70.15	5060.4	72.14	Si
SLV 7	143750	0.25	38548	-50495	70.15	5184.69	73.91	Si
SLV 8	143750	0.25	38548	-50495	70.15	5184.69	73.91	Si
SLV 9	143750	0.25	44266	-57985	70.15	5546.72	79.07	Si
SLV 10	143750	0.25	44266	-57985	70.15	5546.72	79.07	Si

Verifica dei meccanismi locali di collasso con analisi cinematica lineare

forza di aggancio al piano = 0 quota mezzeria = 0.335 Wa = 0.05 Ta = 0.0158

Comb.	N top	N base	V orto	α0	M*	e*	a0*	aLim	Verifica
SLV 1	-36739	-38727	311	0.086	4051.4	0.976	1.27351	3.08769	No
SLV 2	-36739	-38727	311	0.086	4051.4	0.976	1.27351	3.08769	No
SLV 4	-37865	-39628	252	0.087	4166.2	0.977	1.29653	3.08769	No
SLV 3	-37865	-39628	252	0.087	4166.2	0.977	1.29653	3.08769	No
SLV 6	-46536	-48880	332	0.086	5049.6	0.981	1.27164	3.01641	No
SLV 5	-46536	-48880	332	0.086	5049.6	0.981	1.27164	3.01641	No
SLV 14	-68488	-70740	172	0.089	7286.6	0.986	1.31255	3.08769	No
SLV 13	-68488	-70740	172	0.089	7286.6	0.986	1.31255	3.08769	No
SLV 9	-56061	-58484	291	0.087	6020.2	0.984	1.28621	3.01641	No
SLV 10	-56061	-58484	291	0.087	6020.2	0.984	1.28621	3.01641	No

Tabella dei coefficienti di sicurezza minimi

Stato limite	Coeff.s.	Comb.	Verifica
PF_SLU	10.515	SLU 44	Si
V_SLU	5.977	SLU 84	Si
PF_SLV	2.996	SLV 5	Si
V_SLV	0.842	SLV 7	No
PFFP_SLV	61.763	SLV 1	Si
R_SLV	0.412	SLV 1	No

Maschio 18

Verifiche condotte secondo D.M. 17-01-18 (N.T.C.)

Dati geometrici

X ini.	Y ini.	X fin.	Y fin.	Quota i.	Quota.s	l	Sp.	h netta	h ini.	h fin.	a	a.s.,sx	a.s.,dx
-12.401	-3.619	-12.401	-3.315	L1	L3	0.304	0.3	2.7	2.7	2.7			

Caratteristiche del materiale

(Circolare 7 21-01-19 C8.5.I) Muratura in mattoni pieni e malta di calce LC2_Corti

fb	fk	fvk0	fmedio	τ0	fv0	μ	ϕ	fv,lim	E	G	FC
600000			345000	9000	20000	0.58	0.77	32500	320000000	128000000	1.2

Verifica a pressoflessione nel piano secondo D.M. 17-01-18 NTC §7.8.2.2.1 in combinazioni non sismiche, γM = 3

Comb.	Quota	N	M	σ0	Mu	c.s.	Verifica
SLU 55	-2.03	-470	25.05	5149	66.89	2.67	Si
SLU 55	0.67	7	-1.09	0	0	0	No, Trazione
SLU 60	-2.03	-523	26.77	5732	73.9	2.761	Si
SLU 60	0.67	8	-1.24	0	0	0	No, Trazione
SLU 54	-2.03	-462	25.27	5068	65.91	2.608	Si
SLU 54	0.67	7	-1.1	0	0	0	No, Trazione
SLU 1	-2.03	-272	16.54	2978	39.78	2.405	Si
SLU 1	0.67	4	-0.6	0	0	0	No, Trazione
SLU 53	-2.03	-459	25.38	5030	65.44	2.579	Si
SLU 53	0.67	7	-1.1	0	0	0	No, Trazione
SLU 61	-2.03	-526	26.66	5771	74.36	2.789	Si
SLU 61	0.67	8	-1.24	0	0	0	No, Trazione
SLU 56	-2.03	-449	25.68	4921	64.12	2.497	Si
SLU 56	0.67	7	-1.11	0	0	0	No, Trazione
SLU 57	-2.03	-452	25.57	4959	64.59	2.526	Si
SLU 57	0.67	7	-1.11	0	0	0	No, Trazione
SLU 59	-2.03	-457	25.42	5014	65.25	2.567	Si
SLU 59	0.67	7	-1.1	0	0	0	No, Trazione
SLU 58	-2.03	-454	25.53	4975	64.78	2.538	Si
SLU 58	0.67	7	-1.1	0	0	0	No, Trazione

Verifica a pressoflessione nel piano secondo D.M. 17-01-18 NTC §7.8.2.2.1 in combinazioni sismiche, γM = 2

Comb.	Quota	N	M	σ0	Mu	c.s.	Verifica
SLV 2	-2.03	-755	1.94	8275	106.98	55.016	Si
SLV 2	0.67	0	-0.07	0	0	0	No, Trazione
SLV 6	-2.03	-1581	-27.86	17333	206.27	7.405	Si
SLV 6	0.67	-5	0.89	0	0	0	No, e>l/2
SLV 8	-2.03	935	63.13	0	0	0	No, Trazione
SLV 8	0.67	13	-2.26	0	0	0	No, Trazione
SLV 7	-2.03	935	63.13	0	0	0	No, Trazione
SLV 7	0.67	13	-2.26	0	0	0	No, Trazione
SLV 4	-2.03	0	29.24	0	0	0	No, Trazione
SLV 4	0.67	6	-1.02	0	0	0	No, Trazione
SLV 10	-2.03	-1534	-26.1	16821	201.16	7.706	Si
SLV 10	0.67	-4	0.78	0	0	0	No, e>l/2

Comb.	Quota	N	M	σ0	Mu	c.s.	Verifica
SLV 1	-2.03	-755	1.94	8275	106.98	55.016	Si
SLV 1	0.67	0	-0.07	0	0	0	No, Trazione
SLV 5	-2.03	-1581	-27.86	17333	206.27	7.405	Si
SLV 5	0.67	-5	0.89	0	0	0	No, e>l/2
SLV 9	-2.03	-1534	-26.1	16821	201.16	7.706	Si
SLV 9	0.67	-4	0.78	0	0	0	No, e>l/2
SLV 3	-2.03	0	29.24	0	0	0	No, Trazione
SLV 3	0.67	6	-1.02	0	0	0	No, Trazione

Verifica a taglio nel piano secondo D.M. 17-01-18 (N.T.C.) §7.8.2.2.2 con rottura per scorrimento in combinazioni non sismiche, γM = 3

Comb.	Quota	N	V par	M	σ0	σN	l'	fvd	Vt scorr.	Vt fess.diag.	Vt,lim	c.s.	Verifica
SLU 55	-2.03	-470	17	25.05		5287	0.2961	6261	556			32.39	Si
SLU 55	0.67	7	0	-1.09		0	0	5556	0			0	No, Vu<V
SLU 59	-2.03	-457	20	25.42		5269	0.2893	6258	543			27.23	Si
SLU 59	0.67	7	0	-1.1		0	0	5556	0			0	No, Vu<V
SLU 61	-2.03	-526	16	26.66		5771	0.3041	6325	577			36.84	Si
SLU 61	0.67	8	-1	-1.24		0	0	5556	0			0	No, Vu<V
SLU 54	-2.03	-462	19	25.27		5276	0.2921	6259	548			29.13	Si
SLU 54	0.67	7	0	-1.1		0	0	5556	0			0	No, Vu<V
SLU 58	-2.03	-454	21	25.53		5264	0.2873	6257	539			26	Si
SLU 58	0.67	7	0	-1.1		0	0	5556	0			0	No, Vu<V
SLU 57	-2.03	-452	21	25.57		5263	0.2865	6257	538			25.51	Si
SLU 57	0.67	7	0	-1.11		0	0	5556	0			0	No, Vu<V
SLU 60	-2.03	-523	16	26.77		5762	0.3025	6324	574			34.87	Si
SLU 60	0.67	8	-1	-1.24		0	0	5556	0			0	No, Vu<V
SLU 56	-2.03	-449	22	25.68		5260	0.2845	6257	534			24.41	Si
SLU 56	0.67	7	0	-1.11		0	0	5556	0			0	No, Vu<V
SLU 1	-2.03	-272	15	16.54		3311	0.2734	5997	492			32.83	Si
SLU 1	0.67	4	0	-0.6		0	0	5556	0			0	No, Vu<V
SLU 53	-2.03	-459	20	25.38		5271	0.2902	6258	545			27.76	Si
SLU 53	0.67	7	0	-1.1		0	0	5556	0			0	No, Vu<V

Verifica a taglio nel piano secondo D.M. 17-01-18 (N.T.C.) §7.8.2.2.2 con rottura per scorrimento in combinazioni sismiche, γM = 2

Comb.	Quota	N	V par	M	σ0	σN	l'	fvd	Vt scorr.	Vt fess.diag.	Vt,lim	c.s.	Verifica
SLV 8	-2.03	935	321	63.13		0	0	8333	0			0	No, Vu<V
SLV 8	0.67	13	43	-2.26		0	0	8333	0			0	No, Vu<V
SLV 6	-2.03	-1581	-298	-27.86		17333	0.3041	11800	1076			3.61	Si
SLV 6	0.67	-5	-42	0.89		0	0	8333	0			0	No, Vu<V
SLV 2	-2.03	-755	-96	1.94		8275	0.3041	9988	911			9.47	Si
SLV 2	0.67	0	-12	-0.07		0	0	8333	0			0	No, Vu<V
SLV 5	-2.03	-1581	-298	-27.86		17333	0.3041	11800	1076			3.61	Si
SLV 5	0.67	-5	-42	0.89		0	0	8333	0			0	No, Vu<V
SLV 3	-2.03	0	90	29.24		0	0	8333	0			0	No, Vu<V
SLV 3	0.67	6	13	-1.02		0	0	8333	0			0	No, Vu<V
SLV 9	-2.03	-1534	-285	-26.1		16821	0.3041	11698	1067			3.74	Si
SLV 9	0.67	-4	-43	0.78		0	0	8333	0			0	No, Vu<V
SLV 4	-2.03	0	90	29.24		0	0	8333	0			0	No, Vu<V
SLV 4	0.67	6	13	-1.02		0	0	8333	0			0	No, Vu<V
SLV 7	-2.03	935	321	63.13		0	0	8333	0			0	No, Vu<V
SLV 7	0.67	13	43	-2.26		0	0	8333	0			0	No, Vu<V
SLV 1	-2.03	-755	-96	1.94		8275	0.3041	9988	911			9.47	Si
SLV 1	0.67	0	-12	-0.07		0	0	8333	0			0	No, Vu<V
SLV 10	-2.03	-1534	-285	-26.1		16821	0.3041	11698	1067			3.74	Si
SLV 10	0.67	-4	-43	0.78		0	0	8333	0			0	No, Vu<V

Verifica a pressoflessione fuori piano D.M. 17-01-18 (N.T.C.)

quota -0.68 Wa 0.05 denominatore 8 γM = 2

Comb.	fd	Sa	σ0	N	M	Mc	Coeff.s.	Verifica
SLV 7	143750	0.24	0	114	12.18	0	0	No, Trazione
SLV 11	143750	0.24	0	94	12.18	0	0	No, Trazione
SLV 8	143750	0.24	0	114	12.18	0	0	No, Trazione
SLV 12	143750	0.24	0	94	12.18	0	0	No, Trazione
SLV 4	143750	0.24	1499	-137	12.18	20.26	1.66	Si
SLV 3	143750	0.24	1499	-137	12.18	20.26	1.66	Si
SLV 16	143750	0.24	2229	-203	12.18	29.94	2.46	Si
SLV 15	143750	0.24	2229	-203	12.18	29.94	2.46	Si
SLV 1	143750	0.24	4075	-372	12.18	53.89	4.42	Si
SLV 2	143750	0.24	4075	-372	12.18	53.89	4.42	Si

Verifica dei meccanismi locali di collasso con analisi cinematica lineare

forza di aggancio al piano = 0 quota mezzeria = -0.68 Wa = 0.05 Ta = 0.0406

Comb.	N top	N base	V orto	α0	M*	e*	a0*	aLim	Verifica
SLV 11	14	982	-4	0	0	0	0	4.07946	No, Trazione
SLV 12	14	982	-4	0	0	0	0	4.07946	No, Trazione
SLV 13	4	-599	-38	0	0	0	0	4.36108	No, Trazione
SLV 2	0	-755	34	0	0	0	0	4.36108	No, Trazione
SLV 3	6	0	38	0	0	0	0	4.36108	No, Trazione
SLV 8	13	935	17	0	0	0	0	4.07946	No, Trazione
SLV 1	0	-755	34	0	0	0	0	4.36108	No, Trazione
SLV 14	4	-599	-38	0	0	0	0	4.36108	No, Trazione
SLV 7	13	935	17	0	0	0	0	4.07946	No, Trazione
SLV 4	6	0	38	0	0	0	0	4.36108	No, Trazione

Tabella dei coefficienti di sicurezza minimi

Stato limite	Coeff.s.	Comb.	Verifica
PF_SLU	0	SLU 84	No
V_SLU	0	SLU 1	No
PF_SLV	0	SLV 16	No
V_SLV	0	SLV 1	No

Stato limite	Coeff.s.	Comb.	Verifica
PFFP_SLV	0	SLV 12	No
R_SLV	0	SLV 16	No

Maschio 20

Verifiche condotte secondo D.M. 17-01-18 (N.T.C.)

Dati geometrici

X ini.	Y ini.	X fin.	Y fin.	Quota i.	Quota.s	l	Sp.	h netta	h ini.	h fin.	a	a.s.,sx	a.s.,dx
-12.401	-3.315	-12.401	-1.915	L2	L3	1.4	0.3	0.67	0.67	0.67			

Caratteristiche del materiale

(Circolare 7 21-01-19 C8.5.I) Muratura in mattoni pieni e malta di calce LC2_Corti

fb	fk	fvk0	fmedio	τ0	fv0	μ	ϕ	fv,lim	E	G	FC
600000			345000	9000	20000	0.58	0.77	32500	320000000	128000000	1.2

Verifica a pressoflessione nel piano secondo D.M. 17-01-18 NTC §7.8.2.2.1 in combinazioni non sismiche, γM = 3

Comb.	Quota	N	M	σ0	Mu	c.s.	Verifica
SLU 60	0	-533	148.3	1271	367.47	2.478	Si
SLU 60	0.67	34	-36.53	0	0	0	No, Trazione
SLU 56	0	-501	119.49	1193	345.3	2.89	Si
SLU 56	0.67	35	-35.3	0	0	0	No, Trazione
SLU 55	0	-510	117.81	1214	351.47	2.983	Si
SLU 55	0.67	34	-34.16	0	0	0	No, Trazione
SLU 59	0	-505	118.81	1202	347.85	2.928	Si
SLU 59	0.67	34	-34.84	0	0	0	No, Trazione
SLU 58	0	-503	119.06	1198	346.74	2.912	Si
SLU 58	0.67	35	-35.02	0	0	0	No, Trazione
SLU 1	0	-352	40.96	838	243.78	5.952	Si
SLU 1	0.67	25	-22.54	0	0	0	No, Trazione
SLU 53	0	-505	118.65	1203	348.17	2.934	Si
SLU 53	0.67	34	-34.75	0	0	0	No, Trazione
SLU 57	0	-502	119.23	1197	346.41	2.905	Si
SLU 57	0.67	35	-35.11	0	0	0	No, Trazione
SLU 61	0	-535	148.05	1274	368.59	2.49	Si
SLU 61	0.67	34	-36.34	0	0	0	No, Trazione
SLU 54	0	-507	118.4	1207	349.28	2.95	Si
SLU 54	0.67	34	-34.56	0	0	0	No, Trazione

Verifica a pressoflessione nel piano secondo D.M. 17-01-18 NTC §7.8.2.2.1 in combinazioni sismiche, γM = 2

Comb.	Quota	N	M	σ0	Mu	c.s.	Verifica
SLV 6	0	-793	-3.27	1889	546.51	166.965	Si
SLV 6	0.67	-26	24.44	0	0	0	No, e>l/2
SLV 1	0	-498	42.41	1186	345.11	8.138	Si
SLV 1	0.67	9	-7.55	0	0	0	No, Trazione
SLV 7	0	60	136.78	0	0	0	No, Trazione
SLV 7	0.67	78	-73.47	0	0	0	No, Trazione
SLV 10	0	-790	-0.41	1882	544.44	1000	Si
SLV 10	0.67	-25	22.48	0	0	0	No, e>l/2
SLV 9	0	-790	-0.41	1882	544.44	1000	Si
SLV 9	0.67	-25	22.48	0	0	0	No, e>l/2
SLV 8	0	60	136.78	0	0	0	No, Trazione
SLV 8	0.67	78	-73.47	0	0	0	No, Trazione
SLV 5	0	-793	-3.27	1889	546.51	166.965	Si
SLV 5	0.67	-26	24.44	0	0	0	No, e>l/2
SLV 3	0	-242	84.42	576	168.48	1.996	Si
SLV 3	0.67	40	-36.92	0	0	0	No, Trazione
SLV 4	0	-242	84.42	576	168.48	1.996	Si
SLV 4	0.67	40	-36.92	0	0	0	No, Trazione
SLV 2	0	-498	42.41	1186	345.11	8.138	Si
SLV 2	0.67	9	-7.55	0	0	0	No, Trazione

Verifica a taglio nel piano secondo D.M. 17-01-18 (N.T.C.) §7.8.2.2.2 con rottura per scorrimento in combinazioni non sismiche, γM = 3

Comb.	Quota	N	V par	M	σ0	σN	l'	fvd	Vt scorr.	Vt fess.diag.	Vt,lim	c.s.	Verifica
SLU 59	0	-505	762	118.81		1207	1.3929	5717	2389			3.13	Si
SLU 59	0.67	34	253	-34.84		0	0	5556	0			0	No, Vu<V
SLU 1	0	-352	461	40.96		838	1.3996	5667	2380			5.16	Si
SLU 1	0.67	25	161	-22.54		0	0	5556	0			0	No, Vu<V
SLU 61	0	-535	820	148.05		1405	1.2693	5743	2187			2.67	Si
SLU 61	0.67	34	266	-36.34		0	0	5556	0			0	No, Vu<V
SLU 54	0	-507	757	118.4		1208	1.3982	5717	2398			3.17	Si
SLU 54	0.67	34	251	-34.56		0	0	5556	0			0	No, Vu<V
SLU 57	0	-502	767	119.23		1207	1.3874	5717	2379			3.1	Si
SLU 57	0.67	35	254	-35.11		0	0	5556	0			0	No, Vu<V
SLU 53	0	-505	761	118.65		1207	1.3945	5717	2391			3.14	Si
SLU 53	0.67	34	252	-34.75		0	0	5556	0			0	No, Vu<V
SLU 56	0	-501	770	119.49		1207	1.3835	5716	2373			3.08	Si
SLU 56	0.67	35	256	-35.3		0	0	5556	0			0	No, Vu<V
SLU 55	0	-510	751	117.81		1214	1.3996	5717	2401			3.2	Si
SLU 55	0.67	34	248	-34.16		0	0	5556	0			0	No, Vu<V
SLU 58	0	-503	765	119.06		1207	1.3891	5716	2382			3.11	Si
SLU 58	0.67	35	254	-35.02		0	0	5556	0			0	No, Vu<V
SLU 60	0	-533	823	148.3		1405	1.2653	5743	2180			2.65	Si
SLU 60	0.67	34	267	-36.53		0	0	5556	0			0	No, Vu<V

Verifica a taglio nel piano secondo D.M. 17-01-18 (N.T.C.) §7.8.2.2.2 con rottura per scorrimento in combinazioni sismiche, γM = 2

Comb.	Quota	N	V par	M	σ0	σN	I'	fvd	Vt scorr.	Vt fess.diag.	Vt,lim	c.s.	Verifica
SLV 7	0	60	1893	136.78		0	0	8333	0			0	No, Vu<V
SLV 7	0.67	78	215	-73.47		0	0	8333	0			0	No, Vu<V
SLV 9	0	-790	-815	-0.41		1882	1.3996	8710	3657			4.49	Si
SLV 9	0.67	-25	152	22.48		0	0	8333	0			0	No, Vu<V
SLV 4	0	-242	866	84.42		766	1.0523	8487	2679			3.09	Si
SLV 4	0.67	40	170	-36.92		0	0	8333	0			0	No, Vu<V
SLV 5	0	-793	-867	-3.27		1889	1.3996	8711	3658			4.22	Si
SLV 5	0.67	-26	137	24.44		0	0	8333	0			0	No, Vu<V
SLV 8	0	60	1893	136.78		0	0	8333	0			0	No, Vu<V
SLV 8	0.67	78	215	-73.47		0	0	8333	0			0	No, Vu<V
SLV 3	0	-242	866	84.42		766	1.0523	8487	2679			3.09	Si
SLV 3	0.67	40	170	-36.92		0	0	8333	0			0	No, Vu<V
SLV 1	0	-498	38	42.41		1186	1.3996	8571	3598			94.62	Si
SLV 1	0.67	9	147	-7.55		0	0	8333	0			0	No, Vu<V
SLV 6	0	-793	-867	-3.27		1889	1.3996	8711	3658			4.22	Si
SLV 6	0.67	-26	137	24.44		0	0	8333	0			0	No, Vu<V
SLV 2	0	-498	38	42.41		1186	1.3996	8571	3598			94.62	Si
SLV 2	0.67	9	147	-7.55		0	0	8333	0			0	No, Vu<V
SLV 10	0	-790	-815	-0.41		1882	1.3996	8710	3657			4.49	Si
SLV 10	0.67	-25	152	22.48		0	0	8333	0			0	No, Vu<V

Verifica a pressoflessione fuori piano D.M. 17-01-18 (N.T.C.)

quota 0.335 Wa 0.05 denominatore 8 γM = 2

Comb.	fd	Sa	σ0	N	M	Mc	Coeff.s.	Verifica
SLV 11	143750	0.25	402	-169	3.56	25.23	7.1	Si
SLV 12	143750	0.25	402	-169	3.56	25.23	7.1	Si
SLV 8	143750	0.25	404	-170	3.56	25.35	7.13	Si
SLV 7	143750	0.25	404	-170	3.56	25.35	7.13	Si
SLV 16	143750	0.25	495	-208	3.56	31.04	8.73	Si
SLV 15	143750	0.25	495	-208	3.56	31.04	8.73	Si
SLV 3	143750	0.25	501	-211	3.56	31.45	8.85	Si
SLV 4	143750	0.25	501	-211	3.56	31.45	8.85	Si
SLV 13	143750	0.25	577	-242	3.56	36.14	10.17	Si
SLV 14	143750	0.25	577	-242	3.56	36.14	10.17	Si

Verifica dei meccanismi locali di collasso con analisi cinematica lineare

forza di aggancio al piano = 0 quota mezzeria = 0.335 Wa = 0.05 Ta = 0.0025

Comb.	N top	N base	V orto	α0	M*	e*	a0*	aLim	Verifica
SLV 13	13	-488	-39	0	0	0	0	2.53248	No, Trazione
SLV 7	78	60	17	0	0	0	0	2.52374	No, Trazione
SLV 8	78	60	17	0	0	0	0	2.52374	No, Trazione
SLV 3	40	-242	38	0	0	0	0	2.53248	No, Trazione
SLV 14	13	-488	-39	0	0	0	0	2.53248	No, Trazione
SLV 4	40	-242	38	0	0	0	0	2.53248	No, Trazione
SLV 2	9	-498	33	0	0	0	0	2.53248	No, Trazione
SLV 1	9	-498	33	0	0	0	0	2.53248	No, Trazione
SLV 12	79	64	-4	0	0	0	0	2.52374	No, Trazione
SLV 11	79	64	-4	0	0	0	0	2.52374	No, Trazione

Tabella dei coefficienti di sicurezza minimi

Stato limite	Coeff.s.	Comb.	Verifica
PF_SLU	0	SLU 84	No
V_SLU	0	SLU 1	No
PF_SLV	0	SLV 16	No
V_SLV	0	SLV 1	No
PFFP_SLV	7.097	SLV 11	Si
R_SLV	0	SLV 16	No

Maschio 22

Verifiche condotte secondo D.M. 17-01-18 (N.T.C.)

Dati geometrici

X ini.	Y ini.	X fin.	Y fin.	Quota i.	Quota.s	l	Sp.	h netta	h ini.	h fin.	a	a.s.,sx	a.s.,dx
-12.401	-1.915	-12.401	-0.354	Z medio -101 cm	Z medio 34 cm	1.561	0.3	1.35	0.651	2.048			

Caratteristiche del materiale

(Circolare 7 21-01-19 C8.5.I) Muratura in mattoni pieni e malta di calce LC2_Corti

fb	fk	fvk0	fmedio	τ0	fv0	μ	ϕ	fv,lim	E	G	FC
600000			345000	9000	20000	0.58	0.77	32500	320000000	128000000	1.2

Verifica a pressoflessione nel piano secondo D.M. 17-01-18 NTC §7.8.2.2.1 in combinazioni non sismiche, γM = 3

Comb.	Quota	N	M	σ0	Mu	c.s.	Verifica
SLU 19	-0.65	-2474	285.69	5281	1806.01	6.322	Si
SLU 19	0	-1439	352.93	3072	1081.06	3.063	Si
SLU 42	-0.65	-2649	334.86	5654	1924.19	5.746	Si
SLU 42	0	-1553	394.37	3315	1163.08	2.949	Si
SLU 18	-0.65	-2475	287.8	5283	1806.64	6.278	Si
SLU 18	0	-1439	353.06	3071	1080.76	3.061	Si
SLU 40	-0.65	-2644	328.86	5644	1921.03	5.841	Si
SLU 40	0	-1553	393.56	3315	1162.9	2.955	Si
SLU 36	-0.65	-2415	320.2	5156	1766.08	5.516	Si
SLU 36	0	-1369	335.17	2923	1030.63	3.075	Si
SLU 41	-0.65	-2649	336.97	5656	1924.81	5.712	Si

Comb.	Quota	N	M	σ0	Mu	c.s.	Verifica
SLU 41	0	-1553	394.5	3315	1162.79	2.947	Si
SLU 35	-0.65	-2416	322.31	5158	1766.72	5.481	Si
SLU 35	0	-1369	335.3	2922	1030.33	3.073	Si
SLU 20	-0.65	-2479	293.79	5293	1809.83	6.16	Si
SLU 20	0	-1439	353.86	3072	1080.95	3.055	Si
SLU 39	-0.65	-2645	330.97	5646	1921.66	5.806	Si
SLU 39	0	-1552	393.69	3314	1162.61	2.953	Si
SLU 21	-0.65	-2478	291.69	5291	1809.19	6.203	Si
SLU 21	0	-1439	353.73	3073	1081.25	3.057	Si

Verifica a pressoflessione nel piano secondo D.M. 17-01-18 NTC §7.8.2.2.1 in combinazioni sismiche, γM = 2

Comb.	Quota	N	M	σ0	Mu	c.s.	Verifica
SLV 5	-0.65	-1699	-314.75	3628	1287.16	4.089	Si
SLV 5	0	-1310	302.63	2796	999.04	3.301	Si
SLV 12	-0.65	-2066	788.93	4410	1554.43	1.97	Si
SLV 12	0	-652	104.99	1392	503.13	4.792	Si
SLV 11	-0.65	-2066	788.93	4410	1554.43	1.97	Si
SLV 11	0	-652	104.99	1392	503.13	4.792	Si
SLV 14	-0.65	-1929	121.32	4118	1455.25	11.995	Si
SLV 14	0	-1166	290.09	2489	891.65	3.074	Si
SLV 9	-0.65	-1755	-287.35	3747	1328.19	4.622	Si
SLV 9	0	-1357	333.8	2898	1034.46	3.099	Si
SLV 8	-0.65	-2010	761.53	4290	1513.87	1.988	Si
SLV 8	0	-604	73.82	1290	466.79	6.324	Si
SLV 7	-0.65	-2010	761.53	4290	1513.87	1.988	Si
SLV 7	0	-604	73.82	1290	466.79	6.324	Si
SLV 13	-0.65	-1929	121.32	4118	1455.25	11.995	Si
SLV 13	0	-1166	290.09	2489	891.65	3.074	Si
SLV 10	-0.65	-1755	-287.35	3747	1328.19	4.622	Si
SLV 10	0	-1357	333.8	2898	1034.46	3.099	Si
SLV 6	-0.65	-1699	-314.75	3628	1287.16	4.089	Si
SLV 6	0	-1310	302.63	2796	999.04	3.301	Si

Verifica a taglio nel piano secondo D.M. 17-01-18 (N.T.C.) §7.8.2.2.2 con rottura per scorrimento in combinazioni non sismiche, γM = 3

Comb.	Quota	N	V par	M	σ0	σN	I'	fvd	Vt scorr.	Vt fess.diag.	Vt,lim	c.s.	Verifica
SLU 72	-0.65	-2296	853	309.96		4901	1.5614	6209	2908			3.41	Si
SLU 72	0	-1149	980	225.76		2453	1.5614	5883	2756			2.81	Si
SLU 79	-0.65	-2858	907	367.22		6101	1.5614	6369	2983			3.29	Si
SLU 79	0	-1578	1004	366.65		3368	1.5614	6005	2813			2.8	Si
SLU 66	-0.65	-2294	850	309.05		4898	1.5614	6209	2908			3.42	Si
SLU 66	0	-1148	977	225.4		2451	1.5614	5882	2755			2.82	Si
SLU 74	-0.65	-2855	898	364.21		6095	1.5614	6368	2983			3.32	Si
SLU 74	0	-1577	994	366.15		3367	1.5614	6005	2813			2.83	Si
SLU 70	-0.65	-2298	862	312.94		4906	1.5614	6210	2909			3.37	Si
SLU 70	0	-1149	991	226.08		2453	1.5614	5883	2756			2.78	Si
SLU 80	-0.65	-2857	901	365.12		6099	1.5614	6369	2983			3.31	Si
SLU 80	0	-1578	997	366.52		3369	1.5614	6005	2813			2.82	Si
SLU 77	-0.65	-2860	915	370.21		6105	1.5614	6370	2984			3.26	Si
SLU 77	0	-1578	1015	366.96		3368	1.5614	6005	2813			2.77	Si
SLU 69	-0.65	-2299	868	315.05		4908	1.5614	6210	2909			3.35	Si
SLU 69	0	-1149	998	226.21		2452	1.5614	5882	2755			2.76	Si
SLU 78	-0.65	-2859	909	368.1		6103	1.5614	6369	2983			3.28	Si
SLU 78	0	-1578	1008	366.83		3369	1.5614	6005	2813			2.79	Si
SLU 71	-0.65	-2297	859	312.06		4903	1.5614	6209	2909			3.39	Si
SLU 71	0	-1149	987	225.89		2452	1.5614	5883	2755			2.79	Si

Verifica a taglio nel piano secondo D.M. 17-01-18 (N.T.C.) §7.8.2.2.2 con rottura per scorrimento in combinazioni sismiche, γM = 2

Comb.	Quota	N	V par	M	σ0	σN	I'	fvd	Vt scorr.	Vt fess.diag.	Vt,lim	c.s.	Verifica
SLV 10	-0.65	-1755	-1320	-287.35		3747	1.5614	9083	4254			3.22	Si
SLV 10	0	-1357	-788	333.8		2898	1.5614	8913	4175			5.29	Si
SLV 6	-0.65	-1699	-1345	-314.75		3628	1.5614	9059	4243			3.16	Si
SLV 6	0	-1310	-771	302.63		2796	1.5614	8893	4165			5.4	Si
SLV 8	-0.65	-2010	2571	761.53		5558	1.2053	9445	3415			1.33	Si
SLV 8	0	-604	2205	73.82		1290	1.5614	8591	4024			1.83	Si
SLV 15	-0.65	-2022	1255	444.21		4317	1.5614	9197	4308			3.43	Si
SLV 15	0	-954	1126	221.44		2037	1.5614	8741	4094			3.64	Si
SLV 9	-0.65	-1755	-1320	-287.35		3747	1.5614	9083	4254			3.22	Si
SLV 9	0	-1357	-788	333.8		2898	1.5614	8913	4175			5.29	Si
SLV 5	-0.65	-1699	-1345	-314.75		3628	1.5614	9059	4243			3.16	Si
SLV 5	0	-1310	-771	302.63		2796	1.5614	8893	4165			5.4	Si
SLV 16	-0.65	-2022	1255	444.21		4317	1.5614	9197	4308			3.43	Si
SLV 16	0	-954	1126	221.44		2037	1.5614	8741	4094			3.64	Si
SLV 12	-0.65	-2066	2596	788.93		5756	1.1963	9484	3404			1.31	Si
SLV 12	0	-652	2188	104.99		1392	1.5614	8612	4034			1.84	Si
SLV 7	-0.65	-2010	2571	761.53		5558	1.2053	9445	3415			1.33	Si
SLV 7	0	-604	2205	73.82		1290	1.5614	8591	4024			1.83	Si
SLV 11	-0.65	-2066	2596	788.93		5756	1.1963	9484	3404			1.31	Si
SLV 11	0	-652	2188	104.99		1392	1.5614	8612	4034			1.84	Si

Verifica a pressoflessione fuori piano D.M. 17-01-18 (N.T.C.)

quota -0.326 Wa 0.05 denominatore 8 γM = 2

Comb.	fd	Sa	σ0	N	M	Mc	Coeff.s.	Verifica
SLV 8	143750	0.24	2370	-1110	15.64	163.27	10.44	Si
SLV 7	143750	0.24	2370	-1110	15.64	163.27	10.44	Si
SLV 12	143750	0.24	2491	-1167	15.64	171.48	10.96	Si
SLV 11	143750	0.24	2491	-1167	15.64	171.48	10.96	Si
SLV 3	143750	0.24	2795	-1309	15.64	191.89	12.27	Si
SLV 4	143750	0.24	2795	-1309	15.64	191.89	12.27	Si
SLV 15	143750	0.24	3201	-1499	15.64	218.99	14	Si
SLV 16	143750	0.24	3201	-1499	15.64	218.99	14	Si

Comb.	fd	Sa	σ0	N	M	Mc	Coeff.s.	Verifica
SLV 1	143750	0.24	3281	-1537	15.64	224.35	14.34	Si
SLV 2	143750	0.24	3281	-1537	15.64	224.35	14.34	Si

Verifica dei meccanismi locali di collasso con analisi cinematica lineare

forza di aggancio al piano = 0 quota mezzeria = -0.326 Wa = 0.05 Ta = 0.0101

Comb.	N top	N base	V orto	α0	M*	e*	a0*	aLim	Verifica
SLV 9	-1357	-1755	-32	0.127	230.4	0.906	2.04377	2.68641	No
SLV 10	-1357	-1755	-32	0.127	230.4	0.906	2.04377	2.68641	No
SLV 13	-1166	-1929	-29	0.131	211.6	0.901	2.10922	2.72586	No
SLV 14	-1166	-1929	-29	0.131	211.6	0.901	2.10922	2.72586	No
SLV 6	-1310	-1699	-24	0.132	225.7	0.905	2.12141	2.68641	No
SLV 5	-1310	-1699	-24	0.132	225.7	0.905	2.12141	2.68641	No
SLV 15	-954	-2022	-19	0.14	191	0.895	2.27611	2.72586	No
SLV 16	-954	-2022	-19	0.14	191	0.895	2.27611	2.72586	No
SLV 1	-1007	-1743	-3	0.15	196.1	0.897	2.42447	2.72586	No
SLV 2	-1007	-1743	-3	0.15	196.1	0.897	2.42447	2.72586	No

Tabella dei coefficienti di sicurezza minimi

Stato limite	Coeff.s.	Comb.	Verifica
PF_SLU	2.947	SLU 41	Si
V_SLU	2.761	SLU 69	Si
PF_SLV	1.97	SLV 11	Si
V_SLV	1.311	SLV 11	Si
PFFP_SLV	10.439	SLV 7	Si
R_SLV	0.761	SLV 9	No

Maschio 24

Verifiche condotte secondo D.M. 17-01-18 (N.T.C.)

Dati geometrici

X ini.	Y ini.	X fin.	Y fin.	Quota i.	Quota.s	l	Sp.	h netta	h ini.	h fin.	a	a.s.,sx	a.s.,dx
-12.401	-0.354	-12.401	1.046	Z medio -170 cm	L3	1.4	0.3	2.374	2.048	2.7			

Caratteristiche del materiale

(Circolare 7 21-01-19 C8.5.I) Muratura in mattoni pieni e malta di calce LC2_Corti

fb	fk	fvk0	fmedio	τ0	fv0	μ	ϕ	fv,lim	E	G	FC
600000			345000	9000	20000	0.58	0.77	32500	320000000	128000000	1.2

Verifica a pressoflessione nel piano secondo D.M. 17-01-18 NTC §7.8.2.2.1 in combinazioni non sismiche, γM = 3

Comb.	Quota	N	M	σ0	Mu	c.s.	Verifica
SLU 48	-1.38	-8908	972.83	21210	4612.11	4.741	Si
SLU 48	0.67	-1349	352.64	3211	906.91	2.572	Si
SLU 47	-1.38	-8626	927.02	20539	4515.91	4.871	Si
SLU 47	0.67	-1305	326.74	3108	878.82	2.69	Si
SLU 51	-1.38	-8793	954.08	20936	4573.24	4.793	Si
SLU 51	0.67	-1331	341.83	3169	895.53	2.62	Si
SLU 50	-1.38	-8840	961.82	21048	4589.21	4.771	Si
SLU 50	0.67	-1337	346	3184	899.58	2.6	Si
SLU 6	-1.38	-7198	798.28	17138	3978.5	4.984	Si
SLU 6	0.67	-1114	283.13	2652	754.34	2.664	Si
SLU 46	-1.38	-8726	943.18	20775	4550.19	4.824	Si
SLU 46	0.67	-1321	336.16	3145	888.86	2.644	Si
SLU 8	-1.38	-7130	787.27	16976	3950.84	5.018	Si
SLU 8	0.67	-1103	276.49	2625	746.9	2.701	Si
SLU 7	-1.38	-7151	790.54	17026	3959.36	5.008	Si
SLU 7	0.67	-1108	278.96	2637	750.23	2.689	Si
SLU 49	-1.38	-8861	965.09	21098	4596.27	4.763	Si
SLU 49	0.67	-1342	348.47	3196	902.86	2.591	Si
SLU 45	-1.38	-8773	950.92	20887	4566.29	4.802	Si
SLU 45	0.67	-1327	340.33	3160	892.92	2.624	Si

Verifica a pressoflessione nel piano secondo D.M. 17-01-18 NTC §7.8.2.2.1 in combinazioni sismiche, γM = 2

Comb.	Quota	N	M	σ0	Mu	c.s.	Verifica
SLV 5	-1.38	-3689	344.91	8783	2396.69	6.949	Si
SLV 5	0.67	-649	107.81	1546	448.68	4.162	Si
SLV 3	-1.38	-8504	959.63	20247	4966.3	5.175	Si
SLV 3	0.67	-1607	381.78	3827	1089.9	2.855	Si
SLV 2	-1.38	-6226	674.11	14823	3829.28	5.68	Si
SLV 2	0.67	-1206	295.56	2871	824.18	2.789	Si
SLV 6	-1.38	-3689	344.91	8783	2396.69	6.949	Si
SLV 6	0.67	-649	107.81	1546	448.68	4.162	Si
SLV 8	-1.38	-11283	1296.63	26864	6161.65	4.752	Si
SLV 8	0.67	-1988	395.2	4733	1337.61	3.385	Si
SLV 7	-1.38	-11283	1296.63	26864	6161.65	4.752	Si
SLV 7	0.67	-1988	395.2	4733	1337.61	3.385	Si
SLV 1	-1.38	-6226	674.11	14823	3829.28	5.68	Si
SLV 1	0.67	-1206	295.56	2871	824.18	2.789	Si
SLV 11	-1.38	-11387	1299.97	27112	6202.28	4.771	Si
SLV 11	0.67	-1912	320.49	4553	1288.83	4.021	Si
SLV 12	-1.38	-11387	1299.97	27112	6202.28	4.771	Si
SLV 12	0.67	-1912	320.49	4553	1288.83	4.021	Si
SLV 4	-1.38	-8504	959.63	20247	4966.3	5.175	Si
SLV 4	0.67	-1607	381.78	3827	1089.9	2.855	Si

Verifica a taglio nel piano secondo D.M. 17-01-18 (N.T.C.) §7.8.2.2.2 con rottura per scorrimento in combinazioni non sismiche, γM = 3

Comb.	Quota	N	V par	M	σ0	σN	l'	fvd	Vt scorr.	Vt fess.diag.	Vt,lim	c.s.	Verifica
SLU 78	-1.38	-11238	-1218	1241.49		26756	1.4	9123	3832			3.15	Si
SLU 78	0.67	-2118	-367	216.46		5044	1.4	6228	2616			7.13	Si
SLU 81	-1.38	-11530	-1225	1252.27		27453	1.4	9216	3871			3.16	Si
SLU 81	0.67	-2299	-317	125.22		5473	1.4	6285	2640			8.32	Si
SLU 77	-1.38	-11285	-1225	1249.23		26868	1.4	9138	3838			3.13	Si
SLU 77	0.67	-2125	-371	220.63		5058	1.4	6230	2617			7.05	Si
SLU 83	-1.38	-11666	-1247	1274.17		27775	1.4	9259	3889			3.12	Si
SLU 83	0.67	-2320	-328	137.53		5525	1.4	6292	2643			8.06	Si
SLU 84	-1.38	-11619	-1239	1266.43		27663	1.4	9244	3882			3.13	Si
SLU 84	0.67	-2314	-324	133.36		5510	1.4	6290	2642			8.17	Si
SLU 82	-1.38	-11483	-1217	1244.53		27340	1.4	9201	3864			3.17	Si
SLU 82	0.67	-2292	-313	121.05		5458	1.4	6283	2639			8.43	Si
SLU 79	-1.38	-11217	-1215	1238.23		26707	1.4	9116	3829			3.15	Si
SLU 79	0.67	-2113	-366	213.98		5031	1.4	6226	2615			7.15	Si
SLU 74	-1.38	-11149	-1203	1227.33		26546	1.4	9095	3820			3.17	Si
SLU 74	0.67	-2103	-361	208.32		5007	1.4	6223	2614			7.25	Si
SLU 80	-1.38	-11170	-1207	1230.49		26594	1.4	9101	3823			3.17	Si
SLU 80	0.67	-2107	-361	209.81		5016	1.4	6224	2614			7.23	Si
SLU 75	-1.38	-11102	-1195	1219.59		26434	1.4	9080	3814			3.19	Si
SLU 75	0.67	-2097	-356	204.15		4992	1.4	6221	2613			7.33	Si

Verifica a taglio nel piano secondo D.M. 17-01-18 (N.T.C.) §7.8.2.2.2 con rottura per scorrimento in combinazioni sismiche, γM = 2

Comb.	Quota	N	V par	M	σ0	σN	l'	fvd	Vt scorr.	Vt fess.diag.	Vt,lim	c.s.	Verifica
SLV 10	-1.38	-3793	-238	348.25		9031	1.4	10140	4259			17.92	Si
SLV 10	0.67	-574	-925	33.1		1366	1.4	8607	3615			3.91	Si
SLV 6	-1.38	-3689	-189	344.91		8783	1.4	10090	4238			22.45	Si
SLV 6	0.67	-649	-900	107.81		1546	1.4	8642	3630			4.03	Si
SLV 12	-1.38	-11387	-1426	1299.97		27112	1.4	13756	5777			4.05	Si
SLV 12	0.67	-1912	324	320.49		4553	1.4	9244	3883			12	Si
SLV 15	-1.38	-8850	-1067	970.77		21072	1.4	12548	5270			4.94	Si
SLV 15	0.67	-1356	-142	132.74		3228	1.4	8979	3771			26.63	Si
SLV 5	-1.38	-3689	-189	344.91		8783	1.4	10090	4238			22.45	Si
SLV 5	0.67	-649	-900	107.81		1546	1.4	8642	3630			4.03	Si
SLV 16	-1.38	-8850	-1067	970.77		21072	1.4	12548	5270			4.94	Si
SLV 16	0.67	-1356	-142	132.74		3228	1.4	8979	3771			26.63	Si
SLV 8	-1.38	-11283	-1377	1296.63		26864	1.4	13706	5757			4.18	Si
SLV 8	0.67	-1988	348	395.2		4733	1.4	9280	3898			11.2	Si
SLV 11	-1.38	-11387	-1426	1299.97		27112	1.4	13756	5777			4.05	Si
SLV 11	0.67	-1912	324	320.49		4553	1.4	9244	3883			12	Si
SLV 9	-1.38	-3793	-238	348.25		9031	1.4	10140	4259			17.92	Si
SLV 9	0.67	-574	-925	33.1		1366	1.4	8607	3615			3.91	Si
SLV 7	-1.38	-11283	-1377	1296.63		26864	1.4	13706	5757			4.18	Si
SLV 7	0.67	-1988	348	395.2		4733	1.4	9280	3898			11.2	Si

Verifica a pressoflessione fuori piano D.M. 17-01-18 (N.T.C.)

quota -0.354 Wa 0.05 denominatore 8 γM = 2

Comb.	fd	Sa	σ0	N	M	Mc	Coeff.s.	Verifica
SLV 9	143750	0.24	4414	-1854	43.38	268.04	6.18	Si
SLV 10	143750	0.24	4414	-1854	43.38	268.04	6.18	Si
SLV 5	143750	0.24	5083	-2135	43.38	306.89	7.07	Si
SLV 6	143750	0.24	5083	-2135	43.38	306.89	7.07	Si
SLV 14	143750	0.24	8184	-3437	43.38	481.04	11.09	Si
SLV 13	143750	0.24	8184	-3437	43.38	481.04	11.09	Si
SLV 2	143750	0.24	10413	-4373	43.38	600.09	13.83	Si
SLV 1	143750	0.24	10413	-4373	43.38	600.09	13.83	Si
SLV 15	143750	0.24	12084	-5075	43.38	685.98	15.81	Si
SLV 16	143750	0.24	12084	-5075	43.38	685.98	15.81	Si

Verifica dei meccanismi locali di collasso con analisi cinematica lineare

forza di aggancio al piano = 0 quota mezzeria = -0.354 Wa = 0.05 Ta = 0.0314

Comb.	N top	N base	V orto	α0	M*	e*	a0*	aLim	Verifica
SLV 13	-954	-6572	-157	0.009	249.1	0.889	0.147	3.80614	No
SLV 14	-954	-6572	-157	0.009	249.1	0.889	0.147	3.80614	No
SLV 3	-1607	-8504	153	0.025	311.1	0.897	0.40346	3.80614	No
SLV 4	-1607	-8504	153	0.025	311.1	0.897	0.40346	3.80614	No
SLV 16	-1356	-8850	-126	0.033	286.8	0.893	0.52962	3.80614	No
SLV 15	-1356	-8850	-126	0.033	286.8	0.893	0.52962	3.80614	No
SLV 2	-1206	-6226	121	0.032	272.5	0.891	0.52968	3.80614	No
SLV 1	-1206	-6226	121	0.032	272.5	0.891	0.52968	3.80614	No
SLV 9	-574	-3793	-96	0.036	215.8	0.894	0.59135	3.62118	No
SLV 10	-574	-3793	-96	0.036	215.8	0.894	0.59135	3.62118	No

Tabella dei coefficienti di sicurezza minimi

Stato limite	Coeff.s.	Comb.	Verifica
PF_SLU	2.572	SLU 48	Si
V_SLU	3.118	SLU 83	Si
PF_SLV	2.789	SLV 1	Si
V_SLV	3.909	SLV 9	Si
PFFP_SLV	6.179	SLV 9	Si
R_SLV	0.039	SLV 13	No

Maschio 25

Verifiche condotte secondo D.M. 17-01-18 (N.T.C.)

Dati geometrici

X ini.	Y ini.	X fin.	Y fin.	Quota i.	Quota.s	l	Sp.	h netta	h ini.	h fin.	a	a.s.,sx	a.s.,dx
-19.713	6.483	-17.834	6.483	L1	L3	1.879	0.45	2.7	2.7	2.7			

Caratteristiche del materiale

(Circolare 7 21-01-19 C8.5.I) Muratura in mattoni pieni e malta di calce LC2_Corti

fb	fk	fvk0	fmedio	τ0	fv0	μ	ϕ	fv,lim	E	G	FC
600000			345000	9000	20000	0.58	0.77	32500	320000000	128000000	1.2

Verifica a pressoflessione nel piano secondo D.M. 17-01-18 NTC §7.8.2.2.1 in combinazioni non sismiche, γM = 3

Comb.	Quota	N	M	σ0	Mu	c.s.	Verifica
SLU 72	-0.03	-28552	-1479.03	33769	15703.93	10.618	Si
SLU 72	0.37	-27121	-471.53	32076	15446.12	32.758	Si
SLU 70	-0.03	-28777	-1504.67	34035	15739.37	10.46	Si
SLU 70	0.37	-27336	-489.03	32330	15488.43	31.672	Si
SLU 50	-0.03	-25354	-1432.42	29986	15050.9	10.507	Si
SLU 50	0.37	-23971	-535.5	28351	14682.14	27.417	Si
SLU 71	-0.03	-28537	-1478.94	33751	15701.46	10.617	Si
SLU 71	0.37	-27108	-470.49	32060	15443.53	32.824	Si
SLU 49	-0.03	-25594	-1458.15	30270	15109.69	10.362	Si
SLU 49	0.37	-24199	-554.04	28620	14746.56	26.616	Si
SLU 45	-0.03	-25305	-1416.85	29928	15038.75	10.614	Si
SLU 45	0.37	-23910	-537.23	28279	14664.74	27.297	Si
SLU 48	-0.03	-25579	-1458.06	30252	15105.97	10.36	Si
SLU 48	0.37	-24186	-553.01	28605	14742.94	26.659	Si
SLU 69	-0.03	-28762	-1504.59	34017	15736.99	10.459	Si
SLU 69	0.37	-27323	-488	32315	15485.92	31.734	Si
SLU 51	-0.03	-25369	-1432.5	30004	15054.71	10.509	Si
SLU 51	0.37	-23984	-536.54	28366	14685.84	27.371	Si
SLU 46	-0.03	-25320	-1416.93	29946	15042.59	10.616	Si
SLU 46	0.37	-23923	-538.27	28294	14668.46	27.251	Si

Verifica a pressoflessione nel piano secondo D.M. 17-01-18 NTC §7.8.2.2.1 in combinazioni sismiche, γM = 2

Comb.	Quota	N	M	σ0	Mu	c.s.	Verifica
SLV 5	-0.03	-6847	-418.6	8098	6005.9	14.348	Si
SLV 5	0.37	-4645	1715.75	5494	4167.53	2.429	Si
SLV 10	-0.03	-7903	2240.06	9346	6856.37	3.061	Si
SLV 10	0.37	-4358	1773.28	5154	3921.11	2.211	Si
SLV 14	-0.03	-19270	3964.46	22791	14726.87	3.715	Si
SLV 14	0.37	-15397	400.81	18210	12309.15	30.711	Si
SLV 2	-0.03	-15750	-4897.75	18628	12540.84	2.561	Si
SLV 2	0.37	-16355	209.03	19343	12932.43	61.867	Si
SLV 9	-0.03	-7903	2240.06	9346	6856.37	3.061	Si
SLV 9	0.37	-4358	1773.28	5154	3921.11	2.211	Si
SLV 1	-0.03	-15750	-4897.75	18628	12540.84	2.561	Si
SLV 1	0.37	-16355	209.03	19343	12932.43	61.867	Si
SLV 4	-0.03	-24438	-6078.36	28902	17527.66	2.884	Si
SLV 4	0.37	-26104	-1024.9	30874	18327.55	17.882	Si
SLV 3	-0.03	-24438	-6078.36	28902	17527.66	2.884	Si
SLV 3	0.37	-26104	-1024.9	30874	18327.55	17.882	Si
SLV 13	-0.03	-19270	3964.46	22791	14726.87	3.715	Si
SLV 13	0.37	-15397	400.81	18210	12309.15	30.711	Si
SLV 6	-0.03	-6847	-418.6	8098	6005.9	14.348	Si
SLV 6	0.37	-4645	1715.75	5494	4167.53	2.429	Si

Verifica a taglio nel piano secondo D.M. 17-01-18 (N.T.C.) §7.8.2.2.2 con rottura per scorrimento in combinazioni non sismiche, γM = 3

Comb.	Quota	N	V par	M	σ0	σN	l'	fvd	Vt scorr.	Vt fess.diag.	Vt,lim	c.s.	Verifica
SLU 79	-0.03	-32119	-1201	-1454.2		37987	1.8789	10620	8980			7.48	Si
SLU 79	0.37	-30651	-1052	-330.89		36252	1.8789	10389	8784			8.35	Si
SLU 78	-0.03	-32359	-1190	-1479.93		38271	1.8789	10658	9012			7.57	Si
SLU 78	0.37	-30880	-1040	-349.43		36521	1.8789	10425	8815			8.48	Si
SLU 84	-0.03	-33395	-1211	-1402.47		39497	1.8789	10822	9150			7.56	Si
SLU 84	0.37	-31907	-1057	-256.32		37737	1.8789	10587	8952			8.47	Si
SLU 37	-0.03	-27234	-1088	-1154.94		32209	1.8789	9850	8328			7.65	Si
SLU 37	0.37	-26074	-964	-197.45		30838	1.8789	9667	8174			8.48	Si
SLU 35	-0.03	-27459	-1086	-1180.58		32475	1.8789	9886	8358			7.7	Si
SLU 35	0.37	-26289	-960	-214.95		31093	1.8789	9701	8203			8.55	Si
SLU 80	-0.03	-32134	-1193	-1454.29		38005	1.8789	10623	8982			7.53	Si
SLU 80	0.37	-30664	-1044	-331.93		36267	1.8789	10391	8786			8.42	Si
SLU 77	-0.03	-32344	-1198	-1479.85		38253	1.8789	10656	9010			7.52	Si
SLU 77	0.37	-30867	-1048	-348.4		36506	1.8789	10423	8813			8.41	Si
SLU 38	-0.03	-27249	-1080	-1155.02		32228	1.8789	9853	8331			7.71	Si
SLU 38	0.37	-26087	-955	-198.48		30854	1.8789	9669	8176			8.56	Si
SLU 41	-0.03	-28495	-1107	-1103.12		33701	1.8789	10049	8497			7.68	Si
SLU 41	0.37	-27317	-977	-121.84		32308	1.8789	9863	8340			8.53	Si
SLU 83	-0.03	-33380	-1219	-1402.39		39478	1.8789	10819	9148			7.51	Si
SLU 83	0.37	-31894	-1066	-255.28		37722	1.8789	10585	8950			8.4	Si

Verifica a taglio nel piano secondo D.M. 17-01-18 (N.T.C.) §7.8.2.2.2 con rottura per scorrimento in combinazioni sismiche, γM = 2

Comb.	Quota	N	V par	M	σ0	σN	l'	fvd	Vt scorr.	Vt fess.diag.	Vt,lim	c.s.	Verifica
SLV 4	-0.03	-24438	-15147	-6078.36		28902	1.8789	14114	11933			0.79	No, Vu<V
SLV 4	0.37	-26104	-15852	-1024.9		30874	1.8789	14508	12267			0.77	No, Vu<V
SLV 16	-0.03	-27958	16792	2783.86		33066	1.8789	14946	12638			0.75	No, Vu<V
SLV 16	0.37	-25147	15148	-833.12		29741	1.8789	14282	12075			0.8	No, Vu<V
SLV 14	-0.03	-19270	13784	3964.46		22791	1.8789	12892	10900			0.79	No, Vu<V
SLV 14	0.37	-15397	14694	400.81		18210	1.8789	11975	10125			0.69	No, Vu<V
SLV 6	-0.03	-6847	-10485	-418.6		8098	1.8789	9953	8415			0.8	No, Vu<V
SLV 6	0.37	-4645	-5985	1715.75		6035	1.7103	9540	7342			1.23	Si
SLV 2	-0.03	-15750	-18155	-4897.75		18628	1.8789	12059	10196			0.56	No, Vu<V
SLV 2	0.37	-16355	-16306	209.03		19343	1.8789	12202	10317			0.63	No, Vu<V

Comb.	Quota	N	V par	M	σ0	σN	l'	fvd	Vt scorr.	Vt fess.diag.	Vt,lim	c.s.	Verifica
SLV 5	-0.03	-6847	-10485	-418.6		8098	1.8789	9953	8415			0.8	No, Vu<V
SLV 5	0.37	-4645	-5985	1715.75		6035	1.7103	9540	7342			1.23	Si
SLV 15	-0.03	-27958	16792	2783.86		33066	1.8789	14946	12638			0.75	No, Vu<V
SLV 15	0.37	-25147	15148	-833.12		29741	1.8789	14282	12075			0.8	No, Vu<V
SLV 1	-0.03	-15750	-18155	-4897.75		18628	1.8789	12059	10196			0.56	No, Vu<V
SLV 1	0.37	-16355	-16306	209.03		19343	1.8789	12202	10317			0.63	No, Vu<V
SLV 13	-0.03	-19270	13784	3964.46		22791	1.8789	12892	10900			0.79	No, Vu<V
SLV 13	0.37	-15397	14694	400.81		18210	1.8789	11975	10125			0.69	No, Vu<V
SLV 3	-0.03	-24438	-15147	-6078.36		28902	1.8789	14114	11933			0.79	No, Vu<V
SLV 3	0.37	-26104	-15852	-1024.9		30874	1.8789	14508	12267			0.77	No, Vu<V

Verifica a pressoflessione fuori piano D.M. 17-01-18 (N.T.C.)

quota -0.68 Wa 0.08 denominatore 8 γM = 2

Comb.	fd	Sa	σ0	N	M	Mc	Coeff.s.	Verifica
SLV 6	143750	0.24	7730	-6536	112.94	1377.58	12.2	Si
SLV 5	143750	0.24	7730	-6536	112.94	1377.58	12.2	Si
SLV 9	143750	0.24	8046	-6803	112.94	1429.92	12.66	Si
SLV 10	143750	0.24	8046	-6803	112.94	1429.92	12.66	Si
SLV 1	143750	0.24	20166	-17051	112.94	3203.22	28.36	Si
SLV 2	143750	0.24	20166	-17051	112.94	3203.22	28.36	Si
SLV 14	143750	0.24	21219	-17941	112.94	3335.71	29.53	Si
SLV 13	143750	0.24	21219	-17941	112.94	3335.71	29.53	Si
SLV 4	143750	0.24	31141	-26330	112.94	4414.41	39.08	Si
SLV 3	143750	0.24	31141	-26330	112.94	4414.41	39.08	Si

Verifica dei meccanismi locali di collasso con analisi cinematica lineare

forza di aggancio al piano = 0 quota mezzeria = -0.68 Wa = 0.08 Ta = 0.0271

Comb.	N top	N base	V orto	α0	M*	e*	a0*	aLim	Verifica
SLV 9	-580	-4616	-782	0	440.2	0.921	0	3.33245	No
SLV 6	402	-6019	-763	0	0	0	0	3.33245	No, Trazione
SLV 10	-580	-4616	-782	0	440.2	0.921	0	3.33245	No
SLV 5	402	-6019	-763	0	0	0	0	3.33245	No, Trazione
SLV 1	-11197	-20901	-564	0.054	1464.4	0.939	0.83103	3.47592	No
SLV 2	-11197	-20901	-564	0.054	1464.4	0.939	0.83103	3.47592	No
SLV 13	-14469	-16224	-629	0.056	1796.1	0.948	0.85244	3.47592	No
SLV 14	-14469	-16224	-629	0.056	1796.1	0.948	0.85244	3.47592	No
SLV 15	-25393	-27576	-479	0.072	2906.7	0.967	1.08467	3.47592	No
SLV 16	-25393	-27576	-479	0.072	2906.7	0.967	1.08467	3.47592	No

Tabella dei coefficienti di sicurezza minimi

Stato limite	Coeff.s.	Comb.	Verifica
PF_SLU	10.36	SLU 48	Si
V_SLU	7.479	SLU 79	Si
PF_SLV	2.211	SLV 9	Si
V_SLV	0.562	SLV 1	No
PFFP_SLV	12.197	SLV 5	Si
R_SLV	0	SLV 6	No

Maschio 26

Verifiche condotte secondo D.M. 17-01-18 (N.T.C.)

Dati geometrici

X ini.	Y ini.	X fin.	Y fin.	Quota i.	Quota.s	l	Sp.	h netta	h ini.	h fin.	a	a.s.,sx	a.s.,dx
-16.834	6.483	-12.908	6.483	L1	L3	3.926	0.45	2.7	2.7	2.7			

Caratteristiche del materiale

(Circolare 7 21-01-19 C8.5.I) Muratura in mattoni pieni e malta di calce LC2_Corti

fb	fk	fvk0	fmedio	τ0	fv0	μ	ϕ	fv,lim	E	G	FC
600000			345000	9000	20000	0.58	0.77	32500	320000000	128000000	1.2

Verifica a pressoflessione nel piano secondo D.M. 17-01-18 NTC §7.8.2.2.1 in combinazioni non sismiche, γM = 3

Comb.	Quota	N	M	σ0	Mu	c.s.	Verifica
SLU 83	-0.03	-73911	-7599.96	41835	70575.38	9.286	Si
SLU 83	0.37	-71128	-5731.78	40260	70618.06	12.32	Si
SLU 84	-0.03	-73932	-7594.63	41847	70574.26	9.293	Si
SLU 84	0.37	-71149	-5729.61	40271	70618.51	12.325	Si
SLU 81	-0.03	-73028	-7517.23	41335	70611.81	9.393	Si
SLU 81	0.37	-70262	-5696.96	39770	70588.24	12.391	Si
SLU 79	-0.03	-71523	-7259.18	40483	70624.86	9.729	Si
SLU 79	0.37	-68759	-5405.79	38919	70487.89	13.039	Si
SLU 75	-0.03	-71133	-7215.97	40262	70618.15	9.786	Si
SLU 75	0.37	-68373	-5398.56	38701	70452.22	13.05	Si
SLU 77	-0.03	-71995	-7304.02	40750	70627.42	9.67	Si
SLU 77	0.37	-69219	-5435.55	39179	70525.15	12.975	Si
SLU 80	-0.03	-71544	-7253.85	40495	70625.11	9.736	Si
SLU 80	0.37	-68779	-5403.61	38930	70489.65	13.045	Si
SLU 74	-0.03	-71112	-7221.3	40250	70617.68	9.779	Si
SLU 74	0.37	-68353	-5400.73	38689	70450.23	13.045	Si
SLU 78	-0.03	-72016	-7298.69	40762	70627.39	9.677	Si
SLU 78	0.37	-69239	-5433.38	39191	70526.66	12.98	Si
SLU 82	-0.03	-73049	-7511.9	41347	70611.2	9.4	Si
SLU 82	0.37	-70283	-5694.79	39781	70589.17	12.395	Si

Verifica a pressoflessione nel piano secondo D.M. 17-01-18 NTC §7.8.2.2.1 in combinazioni sismiche, γM = 2

Comb.	Quota	N	M	σ0	Mu	c.s.	Verifica
SLV 1	-0.03	-42042	-20690.12	23796	66456.59	3.212	Si
SLV 1	0.37	-37097	-5261.67	20997	60308	11.462	Si
SLV 2	-0.03	-42042	-20690.12	23796	66456.59	3.212	Si
SLV 2	0.37	-37097	-5261.67	20997	60308	11.462	Si
SLV 10	-0.03	-18221	6503.78	10314	32749.79	5.036	Si
SLV 10	0.37	-6908	4230.14	3910	13127.3	3.103	Si
SLV 13	-0.03	-37152	14697.65	21029	60379.09	4.108	Si
SLV 13	0.37	-32435	2166.61	18359	54104.07	24.972	Si
SLV 8	-0.03	-78666	-16089.25	44526	98150.24	6.1	Si
SLV 8	0.37	-85902	-11322.42	48622	101526.07	8.967	Si
SLV 3	-0.03	-59735	-24283.13	33811	84813.82	3.493	Si
SLV 3	0.37	-60375	-9258.89	34173	85371.24	9.22	Si
SLV 4	-0.03	-59735	-24283.13	33811	84813.82	3.493	Si
SLV 4	0.37	-60375	-9258.89	34173	85371.24	9.22	Si
SLV 14	-0.03	-37152	14697.65	21029	60379.09	4.108	Si
SLV 14	0.37	-32435	2166.61	18359	54104.07	24.972	Si
SLV 7	-0.03	-78666	-16089.25	44526	98150.24	6.1	Si
SLV 7	0.37	-85902	-11322.42	48622	101526.07	8.967	Si
SLV 9	-0.03	-18221	6503.78	10314	32749.79	5.036	Si
SLV 9	0.37	-6908	4230.14	3910	13127.3	3.103	Si

Verifica a taglio nel piano secondo D.M. 17-01-18 (N.T.C.) §7.8.2.2.2 con rottura per scorrimento in combinazioni non sismiche, γM = 3

Comb.	Quota	N	V par	M	σ0	σN	l'	fvd	Vt scorr.	Vt fess.diag.	Vt,lim	c.s.	Verifica
SLU 75	-0.03	-71133	-4030	-7215.97		40262	3.9261	10833	19140			4.75	Si
SLU 75	0.37	-68373	-3870	-5398.56		38701	3.9261	10716	18932			4.89	Si
SLU 79	-0.03	-71523	-4117	-7259.18		40483	3.9261	10833	19140			4.65	Si
SLU 79	0.37	-68759	-3957	-5405.79		38919	3.9261	10745	18983			4.8	Si
SLU 83	-0.03	-73911	-4147	-7599.96		41835	3.9261	10833	19140			4.62	Si
SLU 83	0.37	-71128	-3982	-5731.78		40260	3.9261	10833	19140			4.81	Si
SLU 80	-0.03	-71544	-4109	-7253.85		40495	3.9261	10833	19140			4.66	Si
SLU 80	0.37	-68779	-3949	-5403.61		38930	3.9261	10746	18986			4.81	Si
SLU 84	-0.03	-73932	-4139	-7594.63		41847	3.9261	10833	19140			4.62	Si
SLU 84	0.37	-71149	-3974	-5729.61		40271	3.9261	10833	19140			4.82	Si
SLU 77	-0.03	-71995	-4150	-7304.02		40750	3.9261	10833	19140			4.61	Si
SLU 77	0.37	-69219	-3989	-5435.55		39179	3.9261	10779	19044			4.77	Si
SLU 81	-0.03	-73028	-4035	-7517.23		41335	3.9261	10833	19140			4.74	Si
SLU 81	0.37	-70262	-3872	-5696.96		39770	3.9261	10833	19140			4.94	Si
SLU 78	-0.03	-72016	-4142	-7298.69		40762	3.9261	10833	19140			4.62	Si
SLU 78	0.37	-69239	-3980	-5433.38		39191	3.9261	10781	19047			4.79	Si
SLU 74	-0.03	-71112	-4038	-7221.3		40250	3.9261	10833	19140			4.74	Si
SLU 74	0.37	-68353	-3878	-5400.73		38689	3.9261	10714	18929			4.88	Si
SLU 82	-0.03	-73049	-4026	-7511.9		41347	3.9261	10833	19140			4.75	Si
SLU 82	0.37	-70283	-3864	-5694.79		39781	3.9261	10833	19140			4.95	Si

Verifica a taglio nel piano secondo D.M. 17-01-18 (N.T.C.) §7.8.2.2.2 con rottura per scorrimento in combinazioni sismiche, γM = 2

Comb.	Quota	N	V par	M	σ0	σN	l'	fvd	Vt scorr.	Vt fess.diag.	Vt,lim	c.s.	Verifica
SLV 2	-0.03	-42042	-35796	-20690.12		23796	3.9261	13093	23131			0.65	No, Vu<V
SLV 2	0.37	-37097	-35572	-5261.67		20997	3.9261	12533	22142			0.62	No, Vu<V
SLV 14	-0.03	-37152	32929	14697.65		21029	3.9261	12539	22153			0.67	No, Vu<V
SLV 14	0.37	-32435	32292	2166.61		18359	3.9261	12005	21210			0.66	No, Vu<V
SLV 9	-0.03	-18221	11965	6503.78		10314	3.9261	10396	18367			1.53	Si
SLV 9	0.37	-6908	10893	4230.14		3910	3.9261	9115	16104			1.48	Si
SLV 13	-0.03	-37152	32929	14697.65		21029	3.9261	12539	22153			0.67	No, Vu<V
SLV 13	0.37	-32435	32292	2166.61		18359	3.9261	12005	21210			0.66	No, Vu<V
SLV 4	-0.03	-59735	-38445	-24283.13		33811	3.9261	15096	26670			0.69	No, Vu<V
SLV 4	0.37	-60375	-37589	-9258.89		34173	3.9261	15168	26798			0.71	No, Vu<V
SLV 1	-0.03	-42042	-35796	-20690.12		23796	3.9261	13093	23131			0.65	No, Vu<V
SLV 1	0.37	-37097	-35572	-5261.67		20997	3.9261	12533	22142			0.62	No, Vu<V
SLV 3	-0.03	-59735	-38445	-24283.13		33811	3.9261	15096	26670			0.69	No, Vu<V
SLV 3	0.37	-60375	-37589	-9258.89		34173	3.9261	15168	26798			0.71	No, Vu<V
SLV 10	-0.03	-18221	11965	6503.78		10314	3.9261	10396	18367			1.53	Si
SLV 10	0.37	-6908	10893	4230.14		3910	3.9261	9115	16104			1.48	Si
SLV 16	-0.03	-54845	30281	11104.64		31043	3.9261	14542	25692			0.85	No, Vu<V
SLV 16	0.37	-55713	30275	-1830.61		31535	3.9261	14640	25865			0.85	No, Vu<V
SLV 15	-0.03	-54845	30281	11104.64		31043	3.9261	14542	25692			0.85	No, Vu<V
SLV 15	0.37	-55713	30275	-1830.61		31535	3.9261	14640	25865			0.85	No, Vu<V

Verifica a pressoflessione fuori piano D.M. 17-01-18 (N.T.C.)

quota -0.68 Wa 0.08 denominatore 8 γM = 2

Comb.	fd	Sa	σ0	N	M	Mc	Coeff.s.	Verifica
SLV 10	143750	0.24	11579	-20456	236	4166.52	17.65	Si
SLV 9	143750	0.24	11579	-20456	236	4166.52	17.65	Si
SLV 6	143750	0.24	12288	-21710	236	4393.49	18.62	Si
SLV 5	143750	0.24	12288	-21710	236	4393.49	18.62	Si
SLV 13	143750	0.24	20253	-35781	236	6716.36	28.46	Si
SLV 14	143750	0.24	20253	-35781	236	6716.36	28.46	Si
SLV 2	143750	0.24	22618	-39960	236	7326.71	31.05	Si
SLV 1	143750	0.24	22618	-39960	236	7326.71	31.05	Si
SLV 16	143750	0.24	28397	-50171	236	8664.88	36.72	Si
SLV 15	143750	0.24	28397	-50171	236	8664.88	36.72	Si

Verifica dei meccanismi locali di collasso con analisi cinematica lineare

forza di aggancio al piano = 0 quota mezzeria = -0.68 Wa = 0.08 Ta = 0.0271

Comb.	N top	N base	V orto	α0	M*	e*	a0*	aLim	Verifica
SLV 10	3533	-20446	-1578	0	0	0	0	3.33245	No, Trazione
SLV 5	2097	-21728	-1660	0	0	0	0	3.33245	No, Trazione
SLV 6	2097	-21728	-1660	0	0	0	0	3.33245	No, Trazione
SLV 9	3533	-20446	-1578	0	0	0	0	3.33245	No, Trazione

Comb.	N top	N base	V orto	α0	M*	e*	a0*	aLim	Verifica
SLV 1	-31326	-40214	-1697	0.046	3863.7	0.95	0.69983	3.47592	No
SLV 2	-31326	-40214	-1697	0.046	3863.7	0.95	0.69983	3.47592	No
SLV 14	-26540	-35942	-1424	0.049	3378.3	0.943	0.75125	3.47592	No
SLV 13	-26540	-35942	-1424	0.049	3378.3	0.943	0.75125	3.47592	No
SLV 4	-58539	-54778	-1647	0.063	6631.4	0.969	0.94203	3.47592	No
SLV 3	-58539	-54778	-1647	0.063	6631.4	0.969	0.94203	3.47592	No

Tabella dei coefficienti di sicurezza minimi

Stato limite	Coeff.s.	Comb.	Verifica
PF_SLU	9.286	SLU 83	Si
V_SLU	4.612	SLU 77	Si
PF_SLV	3.103	SLV 9	Si
V_SLV	0.622	SLV 1	No
PFFP_SLV	17.655	SLV 9	Si
R_SLV	0	SLV 10	No

Maschio 27

Verifiche condotte secondo D.M. 17-01-18 (N.T.C.)

Dati geometrici

X ini.	Y ini.	X fin.	Y fin.	Quota i.	Quota.s	l	Sp.	h netta	h ini.	h fin.	a	a.s.,sx	a.s.,dx
-11.908	6.483	-7.985	6.483	L1	L3	3.923	0.45	2.7	2.7	2.7			

Caratteristiche del materiale

(Circolare 7 21-01-19 C8.5.I) Muratura in mattoni pieni e malta di calce LC2_Corti

fb	fk	fvk0	fmedio	τ0	fv0	μ	ϕ	fv,lim	E	G	FC
600000			345000	9000	20000	0.58	0.77	32500	320000000	128000000	1.2

Verifica a pressoflessione nel piano secondo D.M. 17-01-18 NTC §7.8.2.2.1 in combinazioni non sismiche, γM = 3

Comb.	Quota	N	M	σ0	Mu	c.s.	Verifica
SLU 78	-0.03	-75173	8081.94	42578	70388.04	8.709	Si
SLU 78	0.37	-75452	7397.06	42736	70362.09	9.512	Si
SLU 82	-0.03	-76129	8294.76	43119	70290.45	8.474	Si
SLU 82	0.37	-76418	7616.45	43283	70256.06	9.224	Si
SLU 79	-0.03	-74643	8018.85	42278	70431.37	8.783	Si
SLU 79	0.37	-74909	7343.55	42428	70410.6	9.588	Si
SLU 83	-0.03	-77063	8378.59	43648	70171.03	8.375	Si
SLU 83	0.37	-77380	7691.04	43828	70125.04	9.118	Si
SLU 81	-0.03	-76088	8280.83	43096	70295.13	8.489	Si
SLU 81	0.37	-76376	7603.6	43259	70261.18	9.241	Si
SLU 80	-0.03	-74684	8032.78	42301	70428.3	8.768	Si
SLU 80	0.37	-74951	7356.4	42452	70407.16	9.571	Si
SLU 84	-0.03	-77104	8392.52	43671	70165.26	8.36	Si
SLU 84	0.37	-77422	7703.9	43852	70118.78	9.102	Si
SLU 77	-0.03	-75132	8068.01	42554	70391.65	8.725	Si
SLU 77	0.37	-75411	7384.21	42712	70366.1	9.529	Si
SLU 74	-0.03	-74157	7970.25	42002	70464.4	8.841	Si
SLU 74	0.37	-74406	7296.76	42143	70448.27	9.655	Si
SLU 75	-0.03	-74198	7984.18	42025	70461.87	8.825	Si
SLU 75	0.37	-74448	7309.62	42167	70445.4	9.637	Si

Verifica a pressoflessione nel piano secondo D.M. 17-01-18 NTC §7.8.2.2.1 in combinazioni sismiche, γM = 2

Comb.	Quota	N	M	σ0	Mu	c.s.	Verifica
SLV 9	-0.03	-20165	5818.16	11421	35860.33	6.164	Si
SLV 9	0.37	-8665	-1300.08	4908	16315.29	12.549	Si
SLV 16	-0.03	-62552	25148.07	35429	87129.34	3.465	Si
SLV 16	0.37	-66114	11074.09	37447	89949.51	8.123	Si
SLV 15	-0.03	-62552	25148.07	35429	87129.34	3.465	Si
SLV 15	0.37	-66114	11074.09	37447	89949.51	8.123	Si
SLV 6	-0.03	-18539	-5193.74	10501	33243.39	6.401	Si
SLV 6	0.37	-6998	-3722.6	3964	13282.99	3.568	Si
SLV 2	-0.03	-38445	-14550.29	21775	61978.5	4.26	Si
SLV 2	0.37	-34941	-1407.7	19790	57442.4	40.806	Si
SLV 1	-0.03	-38445	-14550.29	21775	61978.5	4.26	Si
SLV 1	0.37	-34941	-1407.7	19790	57442.4	40.806	Si
SLV 14	-0.03	-43864	22156.06	24844	68552.93	3.094	Si
SLV 14	0.37	-40497	6667.37	22937	64530.16	9.679	Si
SLV 10	-0.03	-20165	5818.16	11421	35860.33	6.164	Si
SLV 10	0.37	-8665	-1300.08	4908	16315.29	12.549	Si
SLV 13	-0.03	-43864	22156.06	24844	68552.93	3.094	Si
SLV 13	0.37	-40497	6667.37	22937	64530.16	9.679	Si
SLV 5	-0.03	-18539	-5193.74	10501	33243.39	6.401	Si
SLV 5	0.37	-6998	-3722.6	3964	13282.99	3.568	Si

Verifica a taglio nel piano secondo D.M. 17-01-18 (N.T.C.) §7.8.2.2.2 con rottura per scorrimento in combinazioni non sismiche, γM = 3

Comb.	Quota	N	V par	M	σ0	σN	l'	fvd	Vt scorr.	Vt fess.diag.	Vt,lim	c.s.	Verifica
SLU 80	-0.03	-74684	2736	8032.78		42301	3.9234	10833	19127			6.99	Si
SLU 80	0.37	-74951	2626	7356.4		42452	3.9234	10833	19127			7.28	Si
SLU 77	-0.03	-75132	2762	8068.01		42554	3.9234	10833	19127			6.93	Si
SLU 77	0.37	-75411	2650	7384.21		42712	3.9234	10833	19127			7.22	Si
SLU 75	-0.03	-74198	2723	7984.18		42025	3.9234	10833	19127			7.03	Si
SLU 75	0.37	-74448	2612	7309.62		42167	3.9234	10833	19127			7.32	Si
SLU 81	-0.03	-76088	2751	8280.83		43096	3.9234	10833	19127			6.95	Si
SLU 81	0.37	-76376	2638	7603.6		43259	3.9234	10833	19127			7.25	Si
SLU 83	-0.03	-77063	2793	8378.59		43648	3.9234	10833	19127			6.85	Si
SLU 83	0.37	-77380	2679	7691.04		43828	3.9234	10833	19127			7.14	Si

Comb.	Quota	N	V par	M	σ0	σN	l'	fvd	Vt scorr.	Vt fess.diag.	Vt,lim	c.s.	Verifica
SLU 84	-0.03	-77104	2796	8392.52		43671	3.9234	10833	19127			6.84	Si
SLU 84	0.37	-77422	2682	7703.9		43852	3.9234	10833	19127			7.13	Si
SLU 78	-0.03	-75173	2765	8081.94		42578	3.9234	10833	19127			6.92	Si
SLU 78	0.37	-75452	2653	7397.06		42736	3.9234	10833	19127			7.21	Si
SLU 82	-0.03	-76129	2754	8294.76		43119	3.9234	10833	19127			6.95	Si
SLU 82	0.37	-76418	2641	7616.45		43283	3.9234	10833	19127			7.24	Si
SLU 79	-0.03	-74643	2733	8018.85		42278	3.9234	10833	19127			7	Si
SLU 79	0.37	-74909	2622	7343.55		42428	3.9234	10833	19127			7.29	Si
SLU 74	-0.03	-74157	2719	7970.25		42002	3.9234	10833	19127			7.03	Si
SLU 74	0.37	-74406	2609	7296.76		42143	3.9234	10833	19127			7.33	Si

Verifica a taglio nel piano secondo D.M. 17-01-18 (N.T.C.) §7.8.2.2.2 con rottura per scorrimento in combinazioni sismiche, γM = 2

Comb.	Quota	N	V par	M	σ0	σN	l'	fvd	Vt scorr.	Vt fess.diag.	Vt,lim	c.s.	Verifica
SLV 1	-0.03	-38445	-33378	-14550.29		21775	3.9234	12688	22402			0.67	No, Vu<V
SLV 1	0.37	-34941	-34321	-1407.7		19790	3.9234	12291	21701			0.63	No, Vu<V
SLV 14	-0.03	-43864	37735	22156.06		24844	3.9234	13302	23486			0.62	No, Vu<V
SLV 14	0.37	-40497	37052	6667.37		22937	3.9234	12921	22812			0.62	No, Vu<V
SLV 9	-0.03	-20165	13567	5818.16		11421	3.9234	10618	18746			1.38	Si
SLV 9	0.37	-8665	11073	-1300.08		4908	3.9234	9315	16446			1.49	Si
SLV 13	-0.03	-43864	37735	22156.06		24844	3.9234	13302	23486			0.62	No, Vu<V
SLV 13	0.37	-40497	37052	6667.37		22937	3.9234	12921	22812			0.62	No, Vu<V
SLV 4	-0.03	-57133	-33996	-11558.29		32360	3.9234	14805	26140			0.77	No, Vu<V
SLV 4	0.37	-60558	-33465	2999.02		34300	3.9234	15193	26825			0.8	No, Vu<V
SLV 3	-0.03	-57133	-33996	-11558.29		32360	3.9234	14805	26140			0.77	No, Vu<V
SLV 3	0.37	-60558	-33465	2999.02		34300	3.9234	15193	26825			0.8	No, Vu<V
SLV 15	-0.03	-62552	37116	25148.07		35429	3.9234	15419	27223			0.73	No, Vu<V
SLV 15	0.37	-66114	37908	11074.09		37447	3.9234	15823	27936			0.74	No, Vu<V
SLV 16	-0.03	-62552	37116	25148.07		35429	3.9234	15419	27223			0.73	No, Vu<V
SLV 16	0.37	-66114	37908	11074.09		37447	3.9234	15823	27936			0.74	No, Vu<V
SLV 2	-0.03	-38445	-33378	-14550.29		21775	3.9234	12688	22402			0.67	No, Vu<V
SLV 2	0.37	-34941	-34321	-1407.7		19790	3.9234	12291	21701			0.63	No, Vu<V
SLV 10	-0.03	-20165	13567	5818.16		11421	3.9234	10618	18746			1.38	Si
SLV 10	0.37	-8665	11073	-1300.08		4908	3.9234	9315	16446			1.49	Si

Verifica a pressoflessione fuori piano D.M. 17-01-18 (N.T.C.)

quota -0.68 Wa 0.08 denominatore 8 γM = 2

Comb.	fd	Sa	σ0	N	M	Mc	Coeff.s.	Verifica
SLV 6	143750	0.24	11758	-20759	235.84	4221.31	17.9	Si
SLV 5	143750	0.24	11758	-20759	235.84	4221.31	17.9	Si
SLV 9	143750	0.24	12389	-21873	235.84	4422.38	18.75	Si
SLV 10	143750	0.24	12389	-21873	235.84	4422.38	18.75	Si
SLV 1	143750	0.24	20902	-36904	235.84	6883.01	29.18	Si
SLV 2	143750	0.24	20902	-36904	235.84	6883.01	29.18	Si
SLV 14	143750	0.24	23005	-40617	235.84	7418.17	31.45	Si
SLV 13	143750	0.24	23005	-40617	235.84	7418.17	31.45	Si
SLV 3	143750	0.24	29372	-51857	235.84	8863.1	37.58	Si
SLV 4	143750	0.24	29372	-51857	235.84	8863.1	37.58	Si

Verifica dei meccanismi locali di collasso con analisi cinematica lineare

forza di aggancio al piano = 0 quota mezzeria = -0.68 Wa = 0.08 Ta = 0.0271

Comb.	N top	N base	V orto	α0	M*	e*	a0*	aLim	Verifica
SLV 5	3468	-21344	-1677	0	0	0	0	3.33245	No, Trazione
SLV 9	1785	-22141	-1749	0	0	0	0	3.33245	No, Trazione
SLV 10	1785	-22141	-1749	0	0	0	0	3.33245	No, Trazione
SLV 6	3468	-21344	-1677	0	0	0	0	3.33245	No, Trazione
SLV 14	-34684	-39903	-1651	0.05	4204.3	0.953	0.76444	3.47592	No
SLV 13	-34684	-39903	-1651	0.05	4204.3	0.953	0.76444	3.47592	No
SLV 1	-29074	-37244	-1414	0.052	3634.8	0.947	0.79311	3.47592	No
SLV 2	-29074	-37244	-1414	0.052	3634.8	0.947	0.79311	3.47592	No
SLV 15	-64260	-54329	-1496	0.067	7213.5	0.972	0.99811	3.47592	No
SLV 16	-64260	-54329	-1496	0.067	7213.5	0.972	0.99811	3.47592	No

Tabella dei coefficienti di sicurezza minimi

Stato limite	Coeff.s.	Comb.	Verifica
PF_SLU	8.36	SLU 84	Si
V_SLU	6.841	SLU 84	Si
PF_SLV	3.094	SLV 13	Si
V_SLV	0.616	SLV 13	No
PFFP_SLV	17.899	SLV 5	Si
R_SLV	0	SLV 10	No

Maschio 28

Verifiche condotte secondo D.M. 17-01-18 (N.T.C.)

Dati geometrici

X ini.	Y ini.	X fin.	Y fin.	Quota i.	Quota.s	l	Sp.	h netta	h ini.	h fin.	a	a.s.,sx	a.s.,dx
-6.985	6.483	-5.328	6.483	L1	L3	1.657	0.45	2.7	2.7	2.7			

Caratteristiche del materiale

(Circolare 7 21-01-19 C8.5.I) Muratura in mattoni pieni e malta di calce LC2_Corti

fb	fk	fvk0	fmedio	τ0	fv0	μ	ϕ	fv,lim	E	G	FC
600000			345000	9000	20000	0.58	0.77	32500	320000000	128000000	1.2

Verifica a pressoflessione nel piano secondo D.M. 17-01-18 NTC §7.8.2.2.1 in combinazioni non sismiche, γM = 3

Comb.	Quota	N	M	σ0	Mu	c.s.	Verifica
SLU 74	-0.03	-22031	-2335.9	29554	11627.24	4.978	Si
SLU 74	0.37	-21361	-3150.06	28655	11468.82	3.641	Si
SLU 75	-0.03	-22061	-2337.07	29594	11633.94	4.978	Si
SLU 75	0.37	-21390	-3149.82	28695	11476.06	3.643	Si
SLU 82	-0.03	-22789	-2465.4	30571	11791.65	4.783	Si
SLU 82	0.37	-22119	-3305.87	29672	11647.08	3.523	Si
SLU 83	-0.03	-23015	-2478.5	30875	11837.73	4.776	Si
SLU 83	0.37	-22345	-3334.05	29976	11697.3	3.508	Si
SLU 84	-0.03	-23045	-2479.67	30914	11843.64	4.776	Si
SLU 84	0.37	-22375	-3333.81	30015	11703.75	3.511	Si
SLU 79	-0.03	-22163	-2342.55	29731	11656.89	4.976	Si
SLU 79	0.37	-21492	-3164.41	28832	11500.87	3.634	Si
SLU 78	-0.03	-22317	-2351.34	29937	11691.03	4.972	Si
SLU 78	0.37	-21646	-3177.76	29038	11537.82	3.631	Si
SLU 77	-0.03	-22287	-2350.17	29898	11684.53	4.972	Si
SLU 77	0.37	-21617	-3178	28999	11530.78	3.628	Si
SLU 80	-0.03	-22192	-2343.72	29770	11663.49	4.976	Si
SLU 80	0.37	-21522	-3164.16	28871	11508.01	3.637	Si
SLU 81	-0.03	-22759	-2464.23	30531	11785.53	4.783	Si
SLU 81	0.37	-22089	-3306.11	29632	11640.42	3.521	Si

Verifica a pressoflessione nel piano secondo D.M. 17-01-18 NTC §7.8.2.2.1 in combinazioni sismiche, γM = 2

Comb.	Quota	N	M	σ0	Mu	c.s.	Verifica
SLV 6	-0.03	-5278	-2290.36	7081	4118.45	1.798	Si
SLV 6	0.37	-2776	-2688.37	0	0	0	No, e>l/2
SLV 9	-0.03	-5662	76.27	7596	4398.38	57.672	Si
SLV 9	0.37	-3202	-3197.57	0	0	0	No, e>l/2
SLV 10	-0.03	-5662	76.27	7596	4398.38	57.672	Si
SLV 10	0.37	-3202	-3197.57	0	0	0	No, e>l/2
SLV 5	-0.03	-5278	-2290.36	7081	4118.45	1.798	Si
SLV 5	0.37	-2776	-2688.37	0	0	0	No, e>l/2
SLV 14	-0.03	-12715	2528.26	17057	9061.5	3.584	Si
SLV 14	0.37	-11679	-3191.07	15667	8433.17	2.643	Si
SLV 3	-0.03	-17096	-5625.41	22934	11502.5	2.045	Si
SLV 3	0.37	-17101	-978.97	22941	11505.13	11.752	Si
SLV 4	-0.03	-17096	-5625.41	22934	11502.5	2.045	Si
SLV 4	0.37	-17101	-978.97	22941	11505.13	11.752	Si
SLV 13	-0.03	-12715	2528.26	17057	9061.5	3.584	Si
SLV 13	0.37	-11679	-3191.07	15667	8433.17	2.643	Si
SLV 2	-0.03	-11435	-5360.5	15340	8282.21	1.545	Si
SLV 2	0.37	-10261	-1493.74	13764	7541.28	5.049	Si
SLV 1	-0.03	-11435	-5360.5	15340	8282.21	1.545	Si
SLV 1	0.37	-10261	-1493.74	13764	7541.28	5.049	Si

Verifica a taglio nel piano secondo D.M. 17-01-18 (N.T.C.) §7.8.2.2.2 con rottura per scorrimento in combinazioni non sismiche, γM = 3

Comb.	Quota	N	V par	M	σ0	σN	l'	fvd	Vt scorr.	Vt fess.diag.	Vt,lim	c.s.	Verifica
SLU 74	-0.03	-22031	2040	-2335.9		29554	1.6566	9496	7079			3.47	Si
SLU 74	0.37	-21361	2040	-3150.06		28655	1.6566	9376	6989			3.43	Si
SLU 80	-0.03	-22192	2056	-2343.72		29770	1.6566	9525	7100			3.45	Si
SLU 80	0.37	-21522	2056	-3164.16		28871	1.6566	9405	7011			3.41	Si
SLU 81	-0.03	-22759	2109	-2464.23		30531	1.6566	9626	7176			3.4	Si
SLU 81	0.37	-22089	2109	-3306.11		29632	1.6566	9507	7087			3.36	Si
SLU 84	-0.03	-23045	2140	-2479.67		30914	1.6566	9677	7214			3.37	Si
SLU 84	0.37	-22375	2140	-3333.81		30015	1.6566	9558	7125			3.33	Si
SLU 82	-0.03	-22789	2106	-2465.4		30571	1.6566	9632	7180			3.41	Si
SLU 82	0.37	-22119	2106	-3305.87		29672	1.6566	9512	7091			3.37	Si
SLU 77	-0.03	-22287	2074	-2350.17		29898	1.6566	9542	7113			3.43	Si
SLU 77	0.37	-21617	2074	-3178		28999	1.6566	9422	7024			3.39	Si
SLU 79	-0.03	-22163	2059	-2342.55		29731	1.6566	9520	7096			3.45	Si
SLU 79	0.37	-21492	2059	-3164.41		28832	1.6566	9400	7007			3.4	Si
SLU 78	-0.03	-22317	2070	-2351.34		29937	1.6566	9547	7117			3.44	Si
SLU 78	0.37	-21646	2070	-3177.76		29038	1.6566	9427	7028			3.39	Si
SLU 83	-0.03	-23015	2143	-2478.5		30875	1.6566	9672	7210			3.36	Si
SLU 83	0.37	-22345	2143	-3334.05		29976	1.6566	9552	7121			3.32	Si
SLU 75	-0.03	-22061	2036	-2337.07		29594	1.6566	9501	7083			3.48	Si
SLU 75	0.37	-21390	2036	-3149.82		28695	1.6566	9382	6993			3.43	Si

Verifica a taglio nel piano secondo D.M. 17-01-18 (N.T.C.) §7.8.2.2.2 con rottura per scorrimento in combinazioni sismiche, γM = 2

Comb.	Quota	N	V par	M	σ0	σN	l'	fvd	Vt scorr.	Vt fess.diag.	Vt,lim	c.s.	Verifica
SLV 6	-0.03	-5278	2006	-2290.36		9915	1.183	10316	5492			2.74	Si
SLV 6	0.37	-2776	5350	-2688.37		0	0	8333	0			0	No, Vu<V
SLV 14	-0.03	-12715	14833	2528.26		17057	1.6566	11745	8755			0.59	No, Vu<V
SLV 14	0.37	-11679	15672	-3191.07		15667	1.6566	11467	8548			0.55	No, Vu<V
SLV 3	-0.03	-17096	-12144	-5625.41		25367	1.4977	13407	9036			0.74	No, Vu<V
SLV 3	0.37	-17101	-12983	-978.97		22941	1.6566	12922	9632			0.74	No, Vu<V
SLV 4	-0.03	-17096	-12144	-5625.41		25367	1.4977	13407	9036			0.74	No, Vu<V
SLV 4	0.37	-17101	-12983	-978.97		22941	1.6566	12922	9632			0.74	No, Vu<V
SLV 9	-0.03	-5662	9322	76.27		7596	1.6566	9852	7345			0.79	No, Vu<V
SLV 9	0.37	-3202	12575	-3197.57		0	0	8333	0			0	No, Vu<V
SLV 1	-0.03	-11435	-9553	-5360.5		23562	1.0785	13046	6331			0.66	No, Vu<V
SLV 1	0.37	-10261	-8413	-1493.74		13764	1.6566	11086	8264			0.98	No, Vu<V
SLV 2	-0.03	-11435	-9553	-5360.5		23562	1.0785	13046	6331			0.66	No, Vu<V
SLV 2	0.37	-10261	-8413	-1493.74		13764	1.6566	11086	8264			0.98	No, Vu<V
SLV 13	-0.03	-12715	14833	2528.26		17057	1.6566	11745	8755			0.59	No, Vu<V
SLV 13	0.37	-11679	15672	-3191.07		15667	1.6566	11467	8548			0.55	No, Vu<V
SLV 10	-0.03	-5662	9322	76.27		7596	1.6566	9852	7345			0.79	No, Vu<V
SLV 10	0.37	-3202	12575	-3197.57		0	0	8333	0			0	No, Vu<V
SLV 5	-0.03	-5278	2006	-2290.36		9915	1.183	10316	5492			2.74	Si
SLV 5	0.37	-2776	5350	-2688.37		0	0	8333	0			0	No, Vu<V

Verifica a pressoflessione fuori piano D.M. 17-01-18 (N.T.C.)

quota -0.68 Wa 0.08 denominatore 8 γM = 2

Comb.	fd	Sa	σ0	N	M	Mc	Coeff.s.	Verifica
SLV 6	143750	0.24	6159	-4591	99.58	980.89	9.85	Si
SLV 5	143750	0.24	6159	-4591	99.58	980.89	9.85	Si
SLV 2	143750	0.24	7553	-5630	99.58	1188.5	11.94	Si
SLV 1	143750	0.24	7553	-5630	99.58	1188.5	11.94	Si
SLV 9	143750	0.24	11305	-8428	99.58	1720.75	17.28	Si
SLV 10	143750	0.24	11305	-8428	99.58	1720.75	17.28	Si
SLV 4	143750	0.24	13895	-10358	99.58	2065.47	20.74	Si
SLV 3	143750	0.24	13895	-10358	99.58	2065.47	20.74	Si
SLV 14	143750	0.24	24708	-18419	99.58	3306.21	33.2	Si
SLV 13	143750	0.24	24708	-18419	99.58	3306.21	33.2	Si

Verifica dei meccanismi locali di collasso con analisi cinematica lineare

forza di aggancio al piano = 0 quota mezzeria = -0.68 Wa = 0.08 Ta = 0.0271

Comb.	N top	N base	V orto	α0	M*	e*	a0*	aLim	Verifica
SLV 9	574	-14665	-127	0	0	0	0	3.33245	No, Trazione
SLV 10	574	-14665	-127	0	0	0	0	3.33245	No, Trazione
SLV 4	-17103	-4538	-178	0.082	2025.1	0.958	1.24155	3.47592	No
SLV 3	-17103	-4538	-178	0.082	2025.1	0.958	1.24155	3.47592	No
SLV 2	-9757	-154	-170	0.082	1279.4	0.938	1.26588	3.47592	No
SLV 1	-9757	-154	-170	0.082	1279.4	0.938	1.26588	3.47592	No
SLV 7	-24727	-20220	-171	0.083	2800.8	0.969	1.23841	3.33245	No
SLV 8	-24727	-20220	-171	0.083	2800.8	0.969	1.23841	3.33245	No
SLV 16	-14396	-34731	-128	0.085	1749.9	0.953	1.29292	3.47592	No
SLV 15	-14396	-34731	-128	0.085	1749.9	0.953	1.29292	3.47592	No

Tabella dei coefficienti di sicurezza minimi

Stato limite	Coeff.s.	Comb.	Verifica
PF_SLU	3.508	SLU 83	Si
V_SLU	3.322	SLU 83	Si
PF_SLV	0	SLV 5	No
V_SLV	0	SLV 5	No
PFFP_SLV	9.851	SLV 5	Si
R_SLV	0	SLV 10	No

Maschio 29

Verifiche condotte secondo D.M. 17-01-18 (N.T.C.)

Dati geometrici

X ini.	Y ini.	X fin.	Y fin.	Quota i.	Quota.s	l	Sp.	h netta	h ini.	h fin.	a	a.s.,sx	a.s.,dx
-9.728	3.289	-15.058	3.289	L1	L3	5.33	0.3	2.7	2.7	2.7			

Caratteristiche del materiale

(Circolare 7 21-01-19 C8.5.I) Muratura in mattoni pieni e malta di calce LC2_Corti

fb	fk	fvk0	fmedio	τ0	fv0	μ	ϕ	fv,lim	E	G	FC
600000			345000	9000	20000	0.58	0.77	32500	320000000	128000000	1.2

Verifica a pressoflessione nel piano secondo D.M. 17-01-18 NTC §7.8.2.2.1 in combinazioni non sismiche, γM = 3

Comb.	Quota	N	M	σ0	Mu	c.s.	Verifica
SLU 67	-2.03	-40098	2081.95	25077	73963.5	35.526	Si
SLU 67	0.67	-29208	2472	18267	60384.95	24.428	Si
SLU 82	-2.03	-46894	2388.68	29327	79979.36	33.483	Si
SLU 82	0.67	-36547	2864.31	22856	70069.35	24.463	Si
SLU 81	-2.03	-46905	2388.36	29334	79987.51	33.491	Si
SLU 81	0.67	-36554	2865.56	22861	70077.66	24.455	Si
SLU 65	-2.03	-39752	2086.3	24860	73606.67	35.281	Si
SLU 65	0.67	-28905	2459.18	18077	59936.82	24.373	Si
SLU 66	-2.03	-40108	2081.63	25083	73974.69	35.537	Si
SLU 66	0.67	-29215	2473.25	18271	60395.4	24.419	Si
SLU 44	-2.03	-35060	1822.26	21926	68285.36	37.473	Si
SLU 44	0.67	-24092	2143.56	15067	52329.65	24.413	Si
SLU 46	-2.03	-35406	1817.92	22143	68708.61	37.795	Si
SLU 46	0.67	-24396	2156.38	15257	52837.58	24.503	Si
SLU 64	-2.03	-39770	2085.76	24872	73625.58	35.299	Si
SLU 64	0.67	-28917	2461.26	18084	59954.37	24.359	Si
SLU 45	-2.03	-35417	1817.6	22150	68721.9	37.809	Si
SLU 45	0.67	-24403	2157.63	15261	52849.42	24.494	Si
SLU 43	-2.03	-35079	1821.73	21938	68307.77	37.496	Si
SLU 43	0.67	-24104	2145.64	15074	52349.54	24.398	Si

Verifica a pressoflessione nel piano secondo D.M. 17-01-18 NTC §7.8.2.2.1 in combinazioni sismiche, γM = 2

Comb.	Quota	N	M	σ0	Mu	c.s.	Verifica
SLV 16	-2.03	-23971	-30816.23	14991	56044.48	1.819	Si
SLV 16	0.67	-17093	-10032.97	10690	41568.63	4.143	Si
SLV 12	-2.03	-6887	-8612.73	4307	17707.38	2.056	Si
SLV 12	0.67	699	-3346.06	0	0	0	No, Trazione
SLV 1	-2.03	-38006	34030.07	23768	81582.48	2.397	Si
SLV 1	0.67	-28333	13842.51	17719	64557.96	4.664	Si
SLV 7	-2.03	-6747	10743.7	4219	17359.36	1.616	Si
SLV 7	0.67	1625	3486.35	0	0	0	No, Trazione
SLV 4	-2.03	-23503	33705.21	14698	55100.41	1.635	Si
SLV 4	0.67	-14008	12741.73	8760	34654.49	2.72	Si
SLV 3	-2.03	-23503	33705.21	14698	55100.41	1.635	Si
SLV 3	0.67	-14008	12741.73	8760	34654.49	2.72	Si

Comb.	Quota	N	M	σ0	Mu	c.s.	Verifica
SLV 11	-2.03	-6887	-8612.73	4307	17707.38	2.056	Si
SLV 11	0.67	699	-3346.06	0	0	0	No, Trazione
SLV 15	-2.03	-23971	-30816.23	14991	56044.48	1.819	Si
SLV 15	0.67	-17093	-10032.97	10690	41568.63	4.143	Si
SLV 8	-2.03	-6747	10743.7	4219	17359.36	1.616	Si
SLV 8	0.67	1625	3486.35	0	0	0	No, Trazione
SLV 2	-2.03	-38006	34030.07	23768	81582.48	2.397	Si
SLV 2	0.67	-28333	13842.51	17719	64557.96	4.664	Si

Verifica a taglio nel piano secondo D.M. 17-01-18 (N.T.C.) §7.8.2.2.2 con rottura per scorrimento in combinazioni non sismiche, γM = 3

Comb.	Quota	N	V par	M	σ0	σN	l'	fvd	Vt scorr.	Vt fess.diag.	Vt,lim	c.s.	Verifica
SLU 76	-2.03	-44732	-22	2264.27		27975	5.33	9286	14848			684.2	Si
SLU 76	0.67	-34244	-70	2722.13		21416	5.33	8411	13449			191.21	Si
SLU 74	-2.03	-45103	-22	2293.45		28207	5.33	9317	14897			684.56	Si
SLU 74	0.67	-34562	-71	2756.26		21615	5.33	8438	13492			189.49	Si
SLU 78	-2.03	-45078	-22	2259.93		28191	5.33	9314	14894			674.69	Si
SLU 78	0.67	-34548	-71	2734.95		21606	5.33	8436	13490			190.04	Si
SLU 77	-2.03	-45089	-22	2259.61		28198	5.33	9315	14895			676.75	Si
SLU 77	0.67	-34555	-71	2736.2		21610	5.33	8437	13491			189.92	Si
SLU 75	-2.03	-45092	-22	2293.77		28200	5.33	9316	14896			682.47	Si
SLU 75	0.67	-34555	-71	2755.01		21610	5.33	8437	13491			189.61	Si
SLU 73	-2.03	-44746	-21	2298.11		27984	5.33	9287	14850			692.22	Si
SLU 73	0.67	-34251	-71	2742.19		21420	5.33	8412	13450			190.78	Si
SLU 81	-2.03	-46905	-22	2388.36		29334	5.33	9467	15137			677.86	Si
SLU 81	0.67	-36554	-73	2865.56		22861	5.33	8604	13757			187.96	Si
SLU 82	-2.03	-46894	-22	2388.68		29327	5.33	9466	15136			675.84	Si
SLU 82	0.67	-36547	-73	2864.31		22856	5.33	8603	13756			188.07	Si
SLU 83	-2.03	-46891	-23	2354.51		29325	5.33	9466	15135			670.31	Si
SLU 83	0.67	-36547	-73	2845.5		22856	5.33	8603	13756			188.37	Si
SLU 84	-2.03	-46880	-23	2354.84		29318	5.33	9465	15134			668.33	Si
SLU 84	0.67	-36540	-73	2844.25		22852	5.33	8602	13755			188.48	Si

Verifica a taglio nel piano secondo D.M. 17-01-18 (N.T.C.) §7.8.2.2.2 con rottura per scorrimento in combinazioni sismiche, γM = 2

Comb.	Quota	N	V par	M	σ0	σN	l'	fvd	Vt scorr.	Vt fess.diag.	Vt,lim	c.s.	Verifica
SLV 2	-2.03	-38006	17915	34030.07		23863	5.3088	13106	20873			1.17	Si
SLV 2	0.67	-28333	12780	13842.51		17719	5.33	11877	18992			1.49	Si
SLV 12	-2.03	-6887	-5272	-8612.73		5410	4.2434	9415	11986			2.27	Si
SLV 12	0.67	699	-3912	-3346.06		0	0	8333	0			0	No, Vu<V
SLV 4	-2.03	-23503	17995	33705.21		21215	3.6927	12576	13932			0.77	No, Vu<V
SLV 4	0.67	-14008	12772	12741.73		8867	5.2662	10107	15967			1.25	Si
SLV 1	-2.03	-38006	17915	34030.07		23863	5.3088	13106	20873			1.17	Si
SLV 1	0.67	-28333	12780	13842.51		17719	5.33	11877	18992			1.49	Si
SLV 7	-2.03	-6747	5510	10743.7		6989	3.2178	9731	9394			1.71	Si
SLV 7	0.67	1625	3784	3486.35		0	0	8333	0			0	No, Vu<V
SLV 3	-2.03	-23503	17995	33705.21		21215	3.6927	12576	13932			0.77	No, Vu<V
SLV 3	0.67	-14008	12772	12741.73		8867	5.2662	10107	15967			1.25	Si
SLV 15	-2.03	-23971	-17945	-30816.23		19308	4.1383	12195	15140			0.84	No, Vu<V
SLV 15	0.67	-17093	-12880	-10032.97		10690	5.33	10471	16744			1.3	Si
SLV 11	-2.03	-6887	-5272	-8612.73		5410	4.2434	9415	11986			2.27	Si
SLV 11	0.67	699	-3912	-3346.06		0	0	8333	0			0	No, Vu<V
SLV 16	-2.03	-23971	-17945	-30816.23		19308	4.1383	12195	15140			0.84	No, Vu<V
SLV 16	0.67	-17093	-12880	-10032.97		10690	5.33	10471	16744			1.3	Si
SLV 8	-2.03	-6747	5510	10743.7		6989	3.2178	9731	9394			1.71	Si
SLV 8	0.67	1625	3784	3486.35		0	0	8333	0			0	No, Vu<V

Verifica a pressoflessione fuori piano D.M. 17-01-18 (N.T.C.)

quota -0.68 Wa 0.05 denominatore 8 γM = 2

Comb.	fd	Sa	σ0	N	M	Mc	Coeff.s.	Verifica
SLV 8	143750	0.24	2141	-3424	213.59	504.57	2.36	Si
SLV 7	143750	0.24	2141	-3424	213.59	504.57	2.36	Si
SLV 11	143750	0.24	2482	-3968	213.59	583.18	2.73	Si
SLV 12	143750	0.24	2482	-3968	213.59	583.18	2.73	Si
SLV 4	143750	0.24	11841	-18933	213.59	2564.8	12.01	Si
SLV 3	143750	0.24	11841	-18933	213.59	2564.8	12.01	Si
SLV 16	143750	0.24	12976	-20749	213.59	2781.83	13.02	Si
SLV 15	143750	0.24	12976	-20749	213.59	2781.83	13.02	Si
SLV 2	143750	0.24	20495	-32772	213.59	4091.26	19.15	Si
SLV 1	143750	0.24	20495	-32772	213.59	4091.26	19.15	Si

Verifica dei meccanismi locali di collasso con analisi cinematica lineare

forza di aggancio al piano = 0 quota mezzeria = -0.68 Wa = 0.05 Ta = 0.0406

Comb.	N top	N base	V orto	α0	M*	e*	a0*	aLim	Verifica
SLV 8	1625	-6747	-1729	0	0	0	0	4.07946	No, Trazione
SLV 7	1625	-6747	-1729	0	0	0	0	4.07946	No, Trazione
SLV 11	699	-6887	-1673	0	0	0	0	4.07946	No, Trazione
SLV 12	699	-6887	-1673	0	0	0	0	4.07946	No, Trazione
SLV 9	-47052	-55229	2497	0.011	5398.3	0.966	0.16199	4.07946	No
SLV 10	-47052	-55229	2497	0.011	5398.3	0.966	0.16199	4.07946	No
SLV 5	-46126	-55089	2441	0.011	5304.1	0.965	0.16646	4.07946	No
SLV 6	-46126	-55089	2441	0.011	5304.1	0.965	0.16646	4.07946	No
SLV 14	-31419	-38473	1103	0.03	3808.4	0.953	0.46385	4.36108	No
SLV 13	-31419	-38473	1103	0.03	3808.4	0.953	0.46385	4.36108	No

Tabella dei coefficienti di sicurezza minimi

Stato limite	Coeff.s.	Comb.	Verifica
PF_SLU	24.359	SLU 64	Si
V_SLU	187.958	SLU 81	Si
PF_SLV	0	SLV 12	No
V_SLV	0	SLV 7	No

Stato limite	Coeff.s.	Comb.	Verifica
PFFP_SLV	2.362	SLV 7	Si
R_SLV	0	SLV 12	No

Maschio 30

Verifiche condotte secondo D.M. 17-01-18 (N.T.C.)

Dati geometrici

X ini.	Y ini.	X fin.	Y fin.	Quota i.	Quota.s	l	Sp.	h netta	h ini.	h fin.	a	a.s.,sx	a.s.,dx
-19.638	1.046	-24.378	1.046	L1	L3	4.74	0.45	2.7	2.7	2.7			

Caratteristiche del materiale

(Circolare 7 21-01-19 C8.5.I) Muratura in mattoni pieni e malta di calce LC2_Corti

fb	fk	fvk0	fmedio	τ0	fv0	μ	ϕ	fv,lim	E	G	FC
600000			345000	9000	20000	0.58	0.77	32500	320000000	128000000	1.2

Verifica a pressoflessione nel piano secondo D.M. 17-01-18 NTC §7.8.2.2.1 in combinazioni non sismiche, γM = 3

Comb.	Quota	N	M	σ0	Mu	c.s.	Verifica
SLU 77	-2.03	-122873	7864.77	57606	85271.92	10.842	Si
SLU 77	0.07	-112578	-18411.75	52779	93936.36	5.102	Si
SLU 84	-2.03	-125599	7750.59	58884	82493	10.643	Si
SLU 84	0.07	-115307	-19106.56	54058	91921.26	4.811	Si
SLU 75	-2.03	-120712	7640.67	56593	87330.32	11.43	Si
SLU 75	0.07	-110420	-17763.61	51767	95386	5.37	Si
SLU 83	-2.03	-126276	7909.43	59201	81772.13	10.339	Si
SLU 83	0.07	-115981	-19507.92	54374	91392.24	4.685	Si
SLU 74	-2.03	-121388	7799.51	56910	86699.64	11.116	Si
SLU 74	0.07	-111094	-18164.98	52083	94946.86	5.227	Si
SLU 82	-2.03	-124115	7685.33	58188	84031.14	10.934	Si
SLU 82	0.07	-113823	-18859.79	53363	93042.24	4.933	Si
SLU 78	-2.03	-122196	7705.93	57288	85930	11.151	Si
SLU 78	0.07	-111904	-18010.38	52463	94402.8	5.242	Si
SLU 79	-2.03	-122111	7597.58	57249	86012.08	11.321	Si
SLU 79	0.07	-111816	-18292.83	52422	94462.43	5.164	Si
SLU 80	-2.03	-121435	7438.74	56931	86656.1	11.649	Si
SLU 80	0.07	-111142	-17891.47	52106	94914.86	5.305	Si
SLU 81	-2.03	-124791	7844.17	58505	83337.65	10.624	Si
SLU 81	0.07	-114497	-19261.16	53679	92540.51	4.805	Si

Verifica a pressoflessione nel piano secondo D.M. 17-01-18 NTC §7.8.2.2.1 in combinazioni sismiche, γM = 2

Comb.	Quota	N	M	σ0	Mu	c.s.	Verifica
SLV 13	-2.03	-74549	-76659.97	34950	126143.39	1.645	Si
SLV 13	0.07	-66031	-20394.1	30957	116844.59	5.729	Si
SLV 16	-2.03	-74757	-70216.67	35048	126354.54	1.799	Si
SLV 16	0.07	-65873	-19965.42	30883	116660.07	5.843	Si
SLV 1	-2.03	-90527	80463.88	42441	140026.48	1.74	Si
SLV 1	0.07	-83576	-2824.3	39183	134557.8	47.643	Si
SLV 4	-2.03	-90735	86907.18	42539	140177.02	1.613	Si
SLV 4	0.07	-83419	-2395.62	39109	134423.58	56.112	Si
SLV 7	-2.03	-85387	39431.02	40031	136066.68	3.451	Si
SLV 7	0.07	-77094	-8044.92	36143	128665.53	15.993	Si
SLV 2	-2.03	-90527	80463.88	42441	140026.48	1.74	Si
SLV 2	0.07	-83576	-2824.3	39183	134557.8	47.643	Si
SLV 8	-2.03	-85387	39431.02	40031	136066.68	3.451	Si
SLV 8	0.07	-77094	-8044.92	36143	128665.53	15.993	Si
SLV 15	-2.03	-74757	-70216.67	35048	126354.54	1.799	Si
SLV 15	0.07	-65873	-19965.42	30883	116660.07	5.843	Si
SLV 14	-2.03	-74549	-76659.97	34950	126143.39	1.645	Si
SLV 14	0.07	-66031	-20394.1	30957	116844.59	5.729	Si
SLV 3	-2.03	-90735	86907.18	42539	140177.02	1.613	Si
SLV 3	0.07	-83419	-2395.62	39109	134423.58	56.112	Si

Verifica a taglio nel piano secondo D.M. 17-01-18 (N.T.C.) §7.8.2.2.2 con rottura per scorrimento in combinazioni non sismiche, γM = 3

Comb.	Quota	N	V par	M	σ0	σN	l'	fvd	Vt scorr.	Vt fess.diag.	Vt,lim	c.s.	Verifica
SLU 80	-2.03	-121435	12252	7438.74		56931	4.74	10833	23107			1.89	Si
SLU 80	0.07	-111142	12218	-17891.47		52106	4.74	10833	23107			1.89	Si
SLU 78	-2.03	-122196	12436	7705.93		57288	4.74	10833	23107			1.86	Si
SLU 78	0.07	-111904	12401	-18010.38		52463	4.74	10833	23107			1.86	Si
SLU 74	-2.03	-121388	12556	7799.51		56910	4.74	10833	23107			1.84	Si
SLU 74	0.07	-111094	12522	-18164.98		52083	4.74	10833	23107			1.85	Si
SLU 83	-2.03	-126276	13248	7909.43		59201	4.74	10833	23107			1.74	Si
SLU 83	0.07	-115981	13213	-19507.92		54374	4.74	10833	23107			1.75	Si
SLU 82	-2.03	-124115	12830	7685.33		58188	4.74	10833	23107			1.8	Si
SLU 82	0.07	-113823	12796	-18859.79		53363	4.74	10833	23107			1.81	Si
SLU 81	-2.03	-124791	13099	7844.17		58505	4.74	10833	23107			1.76	Si
SLU 81	0.07	-114497	13064	-19261.16		53679	4.74	10833	23107			1.77	Si
SLU 84	-2.03	-125599	12979	7750.59		58884	4.74	10833	23107			1.78	Si
SLU 84	0.07	-115307	12944	-19106.56		54058	4.74	10833	23107			1.79	Si
SLU 75	-2.03	-120712	12286	7640.67		56593	4.74	10833	23107			1.88	Si
SLU 75	0.07	-110420	12253	-17763.61		51767	4.74	10833	23107			1.89	Si
SLU 77	-2.03	-122873	12705	7864.77		57606	4.74	10833	23107			1.82	Si
SLU 77	0.07	-112578	12670	-18411.75		52779	4.74	10833	23107			1.82	Si
SLU 79	-2.03	-122111	12521	7597.58		57249	4.74	10833	23107			1.85	Si
SLU 79	0.07	-111816	12486	-18292.83		52422	4.74	10833	23107			1.85	Si

Verifica a taglio nel piano secondo D.M. 17-01-18 (N.T.C.) §7.8.2.2.2 con rottura per scorrimento in combinazioni sismiche, γM = 2

Comb.	Quota	N	V par	M	σ0	σN	l'	fvd	Vt scorr.	Vt fess.diag.	Vt,lim	c.s.	Verifica
SLV 4	-2.03	-90735	45595	86907.18		47594	4.2366	16250	30980			0.68	No, Vu<V
SLV 4	0.07	-83419	45345	-2395.62		39109	4.74	16155	34459			0.76	No, Vu<V
SLV 3	-2.03	-90735	45595	86907.18		47594	4.2366	16250	30980			0.68	No, Vu<V
SLV 3	0.07	-83419	45345	-2395.62		39109	4.74	16155	34459			0.76	No, Vu<V
SLV 14	-2.03	-74549	-29572	-76659.97		41158	4.025	16250	29433			1	No, Vu<V
SLV 14	0.07	-66031	-29370	-20394.1		30957	4.74	14525	30981			1.05	Si
SLV 15	-2.03	-74757	-26636	-70216.67		38704	4.2922	16074	31047			1.17	Si
SLV 15	0.07	-65873	-26540	-19965.42		30883	4.74	14510	30950			1.17	Si
SLV 1	-2.03	-90527	42659	80463.88		45273	4.4435	16250	32493			0.76	No, Vu<V
SLV 1	0.07	-83576	42515	-2824.3		39183	4.74	16170	34490			0.81	No, Vu<V
SLV 16	-2.03	-74757	-26636	-70216.67		38704	4.2922	16074	31047			1.17	Si
SLV 16	0.07	-65873	-26540	-19965.42		30883	4.74	14510	30950			1.17	Si
SLV 7	-2.03	-85387	23740	39431.02		40031	4.74	16250	34661			1.46	Si
SLV 7	0.07	-77094	23487	-8044.92		36143	4.74	15562	33194			1.41	Si
SLV 13	-2.03	-74549	-29572	-76659.97		41158	4.025	16250	29433			1	No, Vu<V
SLV 13	0.07	-66031	-29370	-20394.1		30957	4.74	14525	30981			1.05	Si
SLV 2	-2.03	-90527	42659	80463.88		45273	4.4435	16250	32493			0.76	No, Vu<V
SLV 2	0.07	-83576	42515	-2824.3		39183	4.74	16170	34490			0.81	No, Vu<V
SLV 8	-2.03	-85387	23740	39431.02		40031	4.74	16250	34661			1.46	Si
SLV 8	0.07	-77094	23487	-8044.92		36143	4.74	15562	33194			1.41	Si

Verifica a pressoflessione fuori piano D.M. 17-01-18 (N.T.C.)

quota -0.68 Wa 0.08 denominatore 8 γM = 2

Comb.	fd	Sa	σ0	N	M	Mc	Coeff.s.	Verifica
SLV 15	143750	0.24	31926	-68098	284.93	11318.6	39.72	Si
SLV 16	143750	0.24	31926	-68098	284.93	11318.6	39.72	Si
SLV 14	143750	0.24	31991	-68237	284.93	11333.53	39.78	Si
SLV 13	143750	0.24	31991	-68237	284.93	11333.53	39.78	Si
SLV 12	143750	0.24	34899	-74439	284.93	11965.06	41.99	Si
SLV 11	143750	0.24	34899	-74439	284.93	11965.06	41.99	Si
SLV 9	143750	0.24	35116	-74903	284.93	12009.61	42.15	Si
SLV 10	143750	0.24	35116	-74903	284.93	12009.61	42.15	Si
SLV 7	143750	0.24	37512	-80013	284.93	12476	43.79	Si
SLV 8	143750	0.24	37512	-80013	284.93	12476	43.79	Si

Verifica dei meccanismi locali di collasso con analisi cinematica lineare

forza di aggancio al piano = 0 quota mezzeria = -0.68 Wa = 0.08 Ta = 0.0271

Comb.	N top	N base	V orto	α0	M*	e*	a0*	aLim	Verifica
SLV 12	-66778	-80593	-806	0.078	7609.6	0.968	1.1735	3.33245	No
SLV 11	-66778	-80593	-806	0.078	7609.6	0.968	1.1735	3.33245	No
SLV 8	-69922	-85387	-797	0.078	7929.6	0.969	1.17706	3.33245	No
SLV 7	-69922	-85387	-797	0.078	7929.6	0.969	1.17706	3.33245	No
SLV 6	-70763	-84691	724	0.079	8015.2	0.969	1.19189	3.33245	No
SLV 5	-70763	-84691	724	0.079	8015.2	0.969	1.19189	3.33245	No
SLV 9	-67620	-79898	715	0.079	7695.3	0.968	1.19268	3.33245	No
SLV 10	-67620	-79898	715	0.079	7695.3	0.968	1.19268	3.33245	No
SLV 4	-73883	-90735	-254	0.086	8332.9	0.97	1.28184	3.47592	No
SLV 3	-73883	-90735	-254	0.086	8332.9	0.97	1.28184	3.47592	No

Tabella dei coefficienti di sicurezza minimi

Stato limite	Coeff.s.	Comb.	Verifica
PF_SLU	4.685	SLU 83	Si
V_SLU	1.744	SLU 83	Si
PF_SLV	1.613	SLV 3	Si
V_SLV	0.679	SLV 3	No
PFFP_SLV	39.725	SLV 15	Si
R_SLV	0.352	SLV 11	No

Maschio 31

Verifiche condotte secondo D.M. 17-01-18 (N.T.C.)

Dati geometrici

X ini.	Y ini.	X fin.	Y fin.	Quota i.	Quota.s	l	Sp.	h netta	h ini.	h fin.	a	a.s.,sx	a.s.,dx
-14.963	1.046	-18.638	1.046	L1	L3	3.675	0.45	2.7	2.7	2.7			

Caratteristiche del materiale

(Circolare 7 21-01-19 C8.5.I) Muratura in mattoni pieni e malta di calce LC2_Corti

fb	fk	fvk0	fmedio	τ0	fv0	μ	ϕ	fv,lim	E	G	FC
600000			345000	9000	20000	0.58	0.77	32500	320000000	128000000	1.2

Verifica a pressoflessione nel piano secondo D.M. 17-01-18 NTC §7.8.2.2.1 in combinazioni non sismiche, γM = 3

Comb.	Quota	N	M	σ0	Mu	c.s.	Verifica
SLU 82	-2.03	-106498	-6034.3	64398	40984.36	6.792	Si
SLU 82	0.07	-100517	-9891.08	60781	46883.32	4.74	Si
SLU 78	-2.03	-105026	-6198.89	63508	42527.39	6.86	Si
SLU 78	0.07	-98982	-10037.32	59853	48240.1	4.806	Si
SLU 75	-2.03	-103462	-5983.48	62562	44101.15	7.37	Si
SLU 75	0.07	-97404	-9802.68	58899	49567.51	5.057	Si
SLU 81	-2.03	-108419	-5098.2	65559	38883.34	7.627	Si
SLU 81	0.07	-101811	-9496.58	61564	45690.1	4.811	Si
SLU 77	-2.03	-106946	-5262.79	64669	40503.53	7.696	Si
SLU 77	0.07	-100276	-9642.81	60635	47101.08	4.885	Si
SLU 76	-2.03	-101436	-6648.82	61337	46040.62	6.925	Si
SLU 76	0.07	-95783	-9953.65	57919	50860.14	5.11	Si

Comb.	Quota	N	M	σ0	Mu	c.s.	Verifica
SLU 79	-2.03	-106201	-5304.07	64218	41301.18	7.787	Si
SLU 79	0.07	-99518	-9530.78	60177	47774.07	5.013	Si
SLU 84	-2.03	-108062	-6249.71	65344	39281.05	6.285	Si
SLU 84	0.07	-102095	-10125.71	61736	45421.9	4.486	Si
SLU 83	-2.03	-109983	-5313.61	66505	37098.1	6.982	Si
SLU 83	0.07	-103389	-9731.21	62518	44173	4.539	Si
SLU 80	-2.03	-104280	-6240.17	63057	43285.98	6.937	Si
SLU 80	0.07	-98224	-9925.28	59395	48886.34	4.925	Si

Verifica a pressoflessione nel piano secondo D.M. 17-01-18 NTC §7.8.2.2.1 in combinazioni sismiche, γM = 2

Comb.	Quota	N	M	σ0	Mu	c.s.	Verifica
SLV 14	-2.03	-68710	-53271.58	41548	83323.82	1.564	Si
SLV 14	0.07	-59095	4336.75	35734	76830.54	17.716	Si
SLV 4	-2.03	-72857	46505.12	44055	85605.06	1.841	Si
SLV 4	0.07	-71833	-16900.84	43436	85070.67	5.034	Si
SLV 10	-2.03	-45247	-26785.09	27361	64524.79	2.409	Si
SLV 10	0.07	-42821	2242.24	25893	62009.72	27.655	Si
SLV 9	-2.03	-45247	-26785.09	27361	64524.79	2.409	Si
SLV 9	0.07	-42821	2242.24	25893	62009.72	27.655	Si
SLV 15	-2.03	-85137	-47709.81	51481	90526.84	1.897	Si
SLV 15	0.07	-72764	816.76	44000	85557.58	104.753	Si
SLV 16	-2.03	-85137	-47709.81	51481	90526.84	1.897	Si
SLV 16	0.07	-72764	816.76	44000	85557.58	104.753	Si
SLV 13	-2.03	-68710	-53271.58	41548	83323.82	1.564	Si
SLV 13	0.07	-59095	4336.75	35734	76830.54	17.716	Si
SLV 2	-2.03	-56430	40943.35	34122	74733.21	1.825	Si
SLV 2	0.07	-58163	-13380.85	35171	76112.01	5.688	Si
SLV 3	-2.03	-72857	46505.12	44055	85605.06	1.841	Si
SLV 3	0.07	-71833	-16900.84	43436	85070.67	5.034	Si
SLV 1	-2.03	-56430	40943.35	34122	74733.21	1.825	Si
SLV 1	0.07	-58163	-13380.85	35171	76112.01	5.688	Si

Verifica a taglio nel piano secondo D.M. 17-01-18 (N.T.C.) §7.8.2.2.2 con rottura per scorrimento in combinazioni non sismiche, γM = 3

Comb.	Quota	N	V par	M	σ0	σN	I'	fvd	Vt scorr.	Vt fess.diag.	Vt,lim	c.s.	Verifica
SLU 80	-2.03	-104280	3119	-6240.17		63057	3.675	10833	17916			5.74	Si
SLU 80	0.07	-98224	3129	-9925.28		59395	3.675	10833	17916			5.73	Si
SLU 81	-2.03	-108419	3026	-5098.2		65559	3.675	10833	17916			5.92	Si
SLU 81	0.07	-101811	3035	-9496.58		61564	3.675	10833	17916			5.9	Si
SLU 78	-2.03	-105026	3202	-6198.89		63508	3.675	10833	17916			5.6	Si
SLU 78	0.07	-98982	3212	-10037.32		59853	3.675	10833	17916			5.58	Si
SLU 77	-2.03	-106946	2969	-5262.79		64669	3.675	10833	17916			6.04	Si
SLU 77	0.07	-100276	2978	-9642.81		60635	3.675	10833	17916			6.02	Si
SLU 83	-2.03	-109983	3046	-5313.61		66505	3.675	10833	17916			5.88	Si
SLU 83	0.07	-103389	3056	-9731.21		62518	3.675	10833	17916			5.86	Si
SLU 75	-2.03	-103462	3182	-5983.48		62562	3.675	10833	17916			5.63	Si
SLU 75	0.07	-97404	3191	-9802.68		58899	3.675	10833	17916			5.61	Si
SLU 84	-2.03	-108062	3280	-6249.71		65344	3.675	10833	17916			5.46	Si
SLU 84	0.07	-102095	3290	-10125.71		61736	3.675	10833	17916			5.45	Si
SLU 76	-2.03	-101436	3255	-6648.82		61337	3.675	10833	17916			5.5	Si
SLU 76	0.07	-95783	3265	-9953.65		57919	3.675	10833	17916			5.49	Si
SLU 73	-2.03	-99872	3235	-6433.41		60391	3.675	10833	17916			5.54	Si
SLU 73	0.07	-94206	3244	-9719.02		56965	3.675	10833	17916			5.52	Si
SLU 82	-2.03	-106498	3260	-6034.3		64398	3.675	10833	17916			5.5	Si
SLU 82	0.07	-100517	3270	-9891.08		60781	3.675	10833	17916			5.48	Si

Verifica a taglio nel piano secondo D.M. 17-01-18 (N.T.C.) §7.8.2.2.2 con rottura per scorrimento in combinazioni sismiche, γM = 2

Comb.	Quota	N	V par	M	σ0	σN	I'	fvd	Vt scorr.	Vt fess.diag.	Vt,lim	c.s.	Verifica
SLV 13	-2.03	-68710	-30786	-53271.58		47916	3.1866	16250	23302			0.76	No, Vu<V
SLV 13	0.07	-59095	-30968	4336.75		35734	3.675	15480	25600			0.83	No, Vu<V
SLV 3	-2.03	-72857	34611	46505.12		45004	3.5976	16250	26307			0.76	No, Vu<V
SLV 3	0.07	-71833	34804	-16900.84		43436	3.675	16250	26873			0.77	No, Vu<V
SLV 8	-2.03	-96320	15554	20018.63		58243	3.675	16250	26873			1.73	Si
SLV 8	0.07	-88106	15243	-14806.33		53277	3.675	16250	26873			1.76	Si
SLV 7	-2.03	-96320	15554	20018.63		58243	3.675	16250	26873			1.73	Si
SLV 7	0.07	-88106	15243	-14806.33		53277	3.675	16250	26873			1.76	Si
SLV 14	-2.03	-68710	-30786	-53271.58		47916	3.1866	16250	23302			0.76	No, Vu<V
SLV 14	0.07	-59095	-30968	4336.75		35734	3.675	15480	25600			0.83	No, Vu<V
SLV 1	-2.03	-56430	32084	40943.35		37592	3.3358	15852	23795			0.74	No, Vu<V
SLV 1	0.07	-58163	32524	-13380.85		35171	3.675	15367	25414			0.78	No, Vu<V
SLV 2	-2.03	-56430	32084	40943.35		37592	3.3358	15852	23795			0.74	No, Vu<V
SLV 2	0.07	-58163	32524	-13380.85		35171	3.675	15367	25414			0.78	No, Vu<V
SLV 16	-2.03	-85137	-28260	-47709.81		51481	3.675	16250	26873			0.95	No, Vu<V
SLV 16	0.07	-72764	-28688	816.76		44000	3.675	16250	26873			0.94	No, Vu<V
SLV 4	-2.03	-72857	34611	46505.12		45004	3.5976	16250	26307			0.76	No, Vu<V
SLV 4	0.07	-71833	34804	-16900.84		43436	3.675	16250	26873			0.77	No, Vu<V
SLV 15	-2.03	-85137	-28260	-47709.81		51481	3.675	16250	26873			0.95	No, Vu<V
SLV 15	0.07	-72764	-28688	816.76		44000	3.675	16250	26873			0.94	No, Vu<V

Verifica a pressoflessione fuori piano D.M. 17-01-18 (N.T.C.)

quota -0.68 Wa 0.08 denominatore 8 γM = 2

Comb.	fd	Sa	σ0	N	M	Mc	Coeff.s.	Verifica
SLV 6	143750	0.24	25398	-42001	220.91	7485.96	33.89	Si
SLV 5	143750	0.24	25398	-42001	220.91	7485.96	33.89	Si
SLV 10	143750	0.24	26664	-44096	220.91	7756.48	35.11	Si
SLV 9	143750	0.24	26664	-44096	220.91	7756.48	35.11	Si
SLV 2	143750	0.24	34001	-56230	220.91	9131.07	41.33	Si
SLV 1	143750	0.24	34001	-56230	220.91	9131.07	41.33	Si
SLV 13	143750	0.24	38224	-63213	220.91	9773.52	44.24	Si
SLV 14	143750	0.24	38224	-63213	220.91	9773.52	44.24	Si
SLV 3	143750	0.24	42643	-70520	220.91	10329.56	46.76	Si

Comb.	fd	Sa	σ0	N	M	Mc	Coeff.s.	Verifica
SLV 4	143750	0.24	42643	-70520	220.91	10329.56	46.76	Si

Verifica dei meccanismi locali di collasso con analisi cinematica lineare

forza di aggancio al piano = 0 quota mezzeria = -0.68 Wa = 0.08 Ta = 0.0271

Comb.	N top	N base	V orto	α0	M*	e*	a0*	aLim	Verifica
SLV 10	-38284	-45247	733	0.074	4527.3	0.959	1.12037	3.33245	No
SLV 9	-38284	-45247	733	0.074	4527.3	0.959	1.12037	3.33245	No
SLV 5	-37429	-41563	675	0.075	4440.3	0.958	1.13969	3.33245	No
SLV 6	-37429	-41563	675	0.075	4440.3	0.958	1.13969	3.33245	No
SLV 7	-72372	-96320	-714	0.078	7997.4	0.976	1.16734	3.33245	No
SLV 8	-72372	-96320	-714	0.078	7997.4	0.976	1.16734	3.33245	No
SLV 12	-73227	-100004	-656	0.079	8084.5	0.976	1.17914	3.33245	No
SLV 11	-73227	-100004	-656	0.079	8084.5	0.976	1.17914	3.33245	No
SLV 4	-59144	-72857	-296	0.084	6650.2	0.971	1.25633	3.47592	No
SLV 3	-59144	-72857	-296	0.084	6650.2	0.971	1.25633	3.47592	No

Tabella dei coefficienti di sicurezza minimi

Stato limite	Coeff.s.	Comb.	Verifica
PF_SLU	4.486	SLU 84	Si
V_SLU	5.446	SLU 84	Si
PF_SLV	1.564	SLV 13	Si
V_SLV	0.742	SLV 1	No
PFFP_SLV	33.887	SLV 5	Si
R_SLV	0.336	SLV 9	No

Maschio 32

Verifiche condotte secondo D.M. 17-01-18 (N.T.C.)

Dati geometrici

X ini.	Y ini.	X fin.	Y fin.	Quota i.	Quota.s	l	Sp.	h netta	h ini.	h fin.	a	a.s.,sx	a.s.,dx
-13.583	1.046	-14.163	1.046	L1	L3	0.58	0.45	2.7	2.7	2.7			

Caratteristiche del materiale

(Circolare 7 21-01-19 C8.5.I) Muratura in mattoni pieni e malta di calce LC2_Corti

fb	fk	fvk0	fmedio	τ0	fv0	μ	ϕ	fv,lim	E	G	FC
600000			345000	9000	20000	0.58	0.77	32500	320000000	128000000	1.2

Verifica a pressoflessione nel piano secondo D.M. 17-01-18 NTC §7.8.2.2.1 in combinazioni non sismiche, γM = 3

Comb.	Quota	N	M	σ0	Mu	c.s.	Verifica
SLU 83	-2.03	-21674	-700.33	83043	0	0	No, Rottura per schiacciamento
SLU 83	0.13	-13091	205.39	50155	1458.83	7.103	Si
SLU 77	-2.03	-21193	-686.59	81199	19.55	0.028	No, M>Mu
SLU 77	0.13	-12765	200.79	48910	1479.22	7.367	Si
SLU 74	-2.03	-20835	-667.3	79829	120.87	0.181	No, M>Mu
SLU 74	0.13	-12530	194.97	48006	1492.19	7.653	Si
SLU 75	-2.03	-20726	-662.45	79409	151.23	0.228	No, M>Mu
SLU 75	0.13	-12449	192.32	47696	1496.29	7.78	Si
SLU 81	-2.03	-21316	-681.05	81672	0	0	No, Rottura per schiacciamento
SLU 81	0.13	-12855	199.57	49252	1473.91	7.385	Si
SLU 79	-2.03	-21036	-684.61	80598	64.42	0.094	No, M>Mu
SLU 79	0.13	-12667	200.51	48534	1484.8	7.405	Si
SLU 78	-2.03	-21083	-681.74	80779	50.99	0.075	No, M>Mu
SLU 78	0.13	-12685	198.14	48600	1483.83	7.489	Si
SLU 84	-2.03	-21564	-695.48	82623	0	0	No, Rottura per schiacciamento
SLU 84	0.13	-13010	202.74	49846	1464.17	7.222	Si
SLU 80	-2.03	-20926	-679.76	80178	95.39	0.14	No, M>Mu
SLU 80	0.13	-12587	197.86	48224	1489.2	7.527	Si
SLU 82	-2.03	-21207	-676.2	81252	15.56	0.023	No, M>Mu
SLU 82	0.13	-12774	196.92	48942	1478.72	7.509	Si

Verifica a pressoflessione nel piano secondo D.M. 17-01-18 NTC §7.8.2.2.1 in combinazioni sismiche, γM = 2

Comb.	Quota	N	M	σ0	Mu	c.s.	Verifica
SLV 4	-2.03	-14141	2670.94	54181	2282.49	0.855	No, M>Mu
SLV 4	0.13	-4536	-843.74	17380	1128.4	1.337	Si
SLV 16	-2.03	-20032	-3422.5	76750	2160.25	0.631	No, M>Mu
SLV 16	0.13	-13950	1053.17	53447	2275.87	2.161	Si
SLV 10	-2.03	-4814	-1565.61	0	0	0	No, e>l/2
SLV 10	0.13	-6707	487.26	25698	1536	3.152	Si
SLV 2	-2.03	-8069	2543.64	0	0	0	No, e>l/2
SLV 2	0.13	-2714	-798.5	0	0	0	No, e>l/2
SLV 13	-2.03	-13960	-3549.8	53486	2276.24	0.641	No, M>Mu
SLV 13	0.13	-12128	1098.4	46466	2179.54	1.984	Si
SLV 9	-2.03	-4814	-1565.61	0	0	0	No, e>l/2
SLV 9	0.13	-6707	487.26	25698	1536	3.152	Si
SLV 14	-2.03	-13960	-3549.8	53486	2276.24	0.641	No, M>Mu
SLV 14	0.13	-12128	1098.4	46466	2179.54	1.984	Si
SLV 1	-2.03	-8069	2543.64	0	0	0	No, e>l/2
SLV 1	0.13	-2714	-798.5	0	0	0	No, e>l/2
SLV 15	-2.03	-20032	-3422.5	76750	2160.25	0.631	No, M>Mu
SLV 15	0.13	-13950	1053.17	53447	2275.87	2.161	Si
SLV 3	-2.03	-14141	2670.94	54181	2282.49	0.855	No, M>Mu
SLV 3	0.13	-4536	-843.74	17380	1128.4	1.337	Si

Verifica a taglio nel piano secondo D.M. 17-01-18 (N.T.C.) §7.8.2.2.2 con rottura per scorrimento in combinazioni non sismiche, γM = 3

Comb.	Quota	N	V par	M	σ0	σN	l'	fvd	Vt scorr.	Vt fess.diag.	Vt,lim	c.s.	Verifica
SLU 80	-2.03	-20926	-776	-679.76		80178	0.58	10833	2827			3.64	Si
SLU 80	0.13	-12587	-379	197.86		48224	0.58	10833	2827			7.46	Si
SLU 74	-2.03	-20835	-767	-667.3		79829	0.58	10833	2827			3.69	Si
SLU 74	0.13	-12530	-381	194.97		48006	0.58	10833	2827			7.42	Si
SLU 79	-2.03	-21036	-784	-684.61		80598	0.58	10833	2827			3.61	Si
SLU 79	0.13	-12667	-383	200.51		48534	0.58	10833	2827			7.39	Si
SLU 75	-2.03	-20726	-759	-662.45		79409	0.58	10833	2827			3.72	Si
SLU 75	0.13	-12449	-377	192.32		47696	0.58	10833	2827			7.5	Si
SLU 81	-2.03	-21316	-787	-681.05		81672	0.58	10833	2827			3.59	Si
SLU 81	0.13	-12855	-399	199.57		49252	0.58	10833	2827			7.09	Si
SLU 84	-2.03	-21564	-799	-695.48		82623	0.58	10833	2827			3.54	Si
SLU 84	0.13	-13010	-400	202.74		49846	0.58	10833	2827			7.08	Si
SLU 77	-2.03	-21193	-787	-686.59		81199	0.58	10833	2827			3.59	Si
SLU 77	0.13	-12765	-385	200.79		48910	0.58	10833	2827			7.34	Si
SLU 82	-2.03	-21207	-779	-676.2		81252	0.58	10833	2827			3.63	Si
SLU 82	0.13	-12774	-395	196.92		48942	0.58	10833	2827			7.15	Si
SLU 78	-2.03	-21083	-779	-681.74		80779	0.58	10833	2827			3.63	Si
SLU 78	0.13	-12685	-381	198.14		48600	0.58	10833	2827			7.41	Si
SLU 83	-2.03	-21674	-807	-700.33		83043	0.58	10833	2827			3.5	Si
SLU 83	0.13	-13091	-403	205.39		50155	0.58	10833	2827			7.01	Si

Verifica a taglio nel piano secondo D.M. 17-01-18 (N.T.C.) §7.8.2.2.2 con rottura per scorrimento in combinazioni sismiche, γM = 2

Comb.	Quota	N	V par	M	σ0	σN	l'	fvd	Vt scorr.	Vt fess.diag.	Vt,lim	c.s.	Verifica
SLV 14	-2.03	-13960	-3051	-3549.8		289551	0.1071	16250	783			0.26	No, Vu<V
SLV 14	0.13	-12128	-340	1098.4		46466	0.58	16250	4241			12.48	Si
SLV 13	-2.03	-13960	-3051	-3549.8		289551	0.1071	16250	783			0.26	No, Vu<V
SLV 13	0.13	-12128	-340	1098.4		46466	0.58	16250	4241			12.48	Si
SLV 15	-2.03	-20032	-2742	-3422.5		124539	0.3574	16250	2614			0.95	No, Vu<V
SLV 15	0.13	-13950	-70	1053.17		53447	0.58	16250	4241			60.86	Si
SLV 10	-2.03	-4814	-1735	-1565.61		0	0	8333	0			0	No, Vu<V
SLV 10	0.13	-6707	-685	487.26		25698	0.58	13473	3516			5.13	Si
SLV 4	-2.03	-14141	2047	2670.94		103586	0.3034	16250	2218			1.08	Si
SLV 4	0.13	-4536	-155	-843.74		32309	0.312	14795	2077			13.42	Si
SLV 2	-2.03	-8069	1738	2543.64		0	0	8333	0			0	No, Vu<V
SLV 2	0.13	-2714	-425	-798.5		0	0	8333	0			0	No, Vu<V
SLV 1	-2.03	-8069	1738	2543.64		0	0	8333	0			0	No, Vu<V
SLV 1	0.13	-2714	-425	-798.5		0	0	8333	0			0	No, Vu<V
SLV 16	-2.03	-20032	-2742	-3422.5		124539	0.3574	16250	2614			0.95	No, Vu<V
SLV 16	0.13	-13950	-70	1053.17		53447	0.58	16250	4241			60.86	Si
SLV 3	-2.03	-14141	2047	2670.94		103586	0.3034	16250	2218			1.08	Si
SLV 3	0.13	-4536	-155	-843.74		32309	0.312	14795	2077			13.42	Si
SLV 9	-2.03	-4814	-1735	-1565.61		0	0	8333	0			0	No, Vu<V
SLV 9	0.13	-6707	-685	487.26		25698	0.58	13473	3516			5.13	Si

Verifica a pressoflessione fuori piano D.M. 17-01-18 (N.T.C.)

quota -0.68 Wa 0.08 denominatore 8 γM = 2

Comb.	fd	Sa	σ0	N	M	Mc	Coeff.s.	Verifica
SLV 1	143750	0.24	15031	-3923	34.86	774.12	22.2	Si
SLV 2	143750	0.24	15031	-3923	34.86	774.12	22.2	Si
SLV 6	143750	0.24	17477	-4562	34.86	879.54	25.23	Si
SLV 5	143750	0.24	17477	-4562	34.86	879.54	25.23	Si
SLV 3	143750	0.24	29174	-7614	34.86	1304.18	37.41	Si
SLV 4	143750	0.24	29174	-7614	34.86	1304.18	37.41	Si
SLV 9	143750	0.24	33716	-8800	34.86	1433.62	41.12	Si
SLV 10	143750	0.24	33716	-8800	34.86	1433.62	41.12	Si
SLV 15	143750	0.24	83304	-21742	34.86	1556.79	44.65	Si
SLV 16	143750	0.24	83304	-21742	34.86	1556.79	44.65	Si

Verifica dei meccanismi locali di collasso con analisi cinematica lineare

forza di aggancio al piano = 0 quota mezzeria = -0.68 Wa = 0.08 Ta = 0.0271

Comb.	N top	N base	V orto	α0	M*	e*	a0*	aLim	Verifica
SLV 5	-3224	-3047	432	0	428.5	0.936	0	3.33245	No
SLV 6	-3224	-3047	432	0	428.5	0.936	0	3.33245	No
SLV 9	-5727	-4814	488	0.015	682.4	0.957	0.22692	3.33245	No
SLV 10	-5727	-4814	488	0.015	682.4	0.957	0.22692	3.33245	No
SLV 8	-9193	-23287	-491	0.039	1035.2	0.971	0.58092	3.33245	No
SLV 7	-9193	-23287	-491	0.039	1035.2	0.971	0.58092	3.33245	No
SLV 4	-4184	-14141	-233	0.046	525.7	0.946	0.70628	3.47592	No
SLV 3	-4184	-14141	-233	0.046	525.7	0.946	0.70628	3.47592	No
SLV 12	-11696	-25054	-435	0.052	1290.1	0.976	0.77975	3.33245	No
SLV 11	-11696	-25054	-435	0.052	1290.1	0.976	0.77975	3.33245	No

Tabella dei coefficienti di sicurezza minimi

Stato limite	Coeff.s.	Comb.	Verifica
PF_SLU	0	SLU 81	No
V_SLU	3.504	SLU 83	Si
PF_SLV	0	SLV 1	No
V_SLV	0	SLV 1	No
PFFP_SLV	22.204	SLV 1	Si
R_SLV	0	SLV 5	No

Maschio 33

Verifiche condotte secondo D.M. 17-01-18 (N.T.C.)

Dati geometrici

X ini.	Y ini.	X fin.	Y fin.	Quota i.	Quota.s	l	Sp.	h netta	h ini.	h fin.	a	a.s.,sx	a.s.,dx
-12.283	1.046	-12.613	1.046	L1	L3	0.33	0.45	2.7	2.7	2.7			

Caratteristiche del materiale

(Circolare 7 21-01-19 C8.5.I) Muratura in mattoni pieni e malta di calce LC2_Corti

fb	fk	fvk0	fmedio	τ0	fv0	μ	ϕ	fv,lim	E	G	FC
600000			345000	9000	20000	0.58	0.77	32500	320000000	128000000	1.2

Verifica a pressoflessione nel piano secondo D.M. 17-01-18 NTC §7.8.2.2.1 in combinazioni non sismiche, γM = 3

Comb.	Quota	N	M	σ0	Mu	c.s.	Verifica
SLU 76	-2.03	-4762	-145.21	32064	476.4	3.281	Si
SLU 76	0.13	-3033	125.48	20427	375	2.988	Si
SLU 82	-2.03	-4953	-144.16	33351	482.61	3.348	Si
SLU 82	0.13	-3159	128.52	21273	385.12	2.997	Si
SLU 80	-2.03	-4837	-152.43	32569	478.96	3.142	Si
SLU 80	0.13	-3092	129.23	20824	379.81	2.939	Si
SLU 83	-2.03	-5035	-151.16	33908	484.99	3.208	Si
SLU 83	0.13	-3223	132.29	21704	390.11	2.949	Si
SLU 75	-2.03	-4809	-145.05	32384	478.03	3.296	Si
SLU 75	0.13	-3067	126.32	20652	377.73	2.99	Si
SLU 77	-2.03	-4892	-152.05	32941	480.74	3.162	Si
SLU 77	0.13	-3131	130.09	21083	382.88	2.943	Si
SLU 74	-2.03	-4832	-144.39	32538	478.8	3.316	Si
SLU 74	0.13	-3081	126.37	20750	378.92	2.998	Si
SLU 84	-2.03	-5012	-151.82	33754	484.35	3.19	Si
SLU 84	0.13	-3208	132.24	21606	388.98	2.942	Si
SLU 78	-2.03	-4869	-152.7	32786	480.01	3.143	Si
SLU 78	0.13	-3116	130.04	20984	381.71	2.935	Si
SLU 79	-2.03	-4859	-151.78	32724	479.71	3.161	Si
SLU 79	0.13	-3107	129.28	20923	380.98	2.947	Si

Verifica a pressoflessione nel piano secondo D.M. 17-01-18 NTC §7.8.2.2.1 in combinazioni sismiche, γM = 2

Comb.	Quota	N	M	σ0	Mu	c.s.	Verifica
SLV 10	-2.03	-1205	-427.1	0	0	0	No, e>l/2
SLV 10	0.13	-1219	149.85	8208	187.61	1.252	Si
SLV 4	-2.03	-4565	992.14	0	0	0	No, e>l/2
SLV 4	0.13	-2050	-201.81	13803	300	1.487	Si
SLV 16	-2.03	-3114	-1173.34	0	0	0	No, e>l/2
SLV 16	0.13	-2613	380.36	17598	369.09	0.97	No, M>Mu
SLV 13	-2.03	-1998	-1178.73	0	0	0	No, e>l/2
SLV 13	0.13	-2061	368.02	0	0	0	No, e>l/2
SLV 9	-2.03	-1205	-427.1	0	0	0	No, e>l/2
SLV 9	0.13	-1219	149.85	8208	187.61	1.252	Si
SLV 14	-2.03	-1998	-1178.73	0	0	0	No, e>l/2
SLV 14	0.13	-2061	368.02	0	0	0	No, e>l/2
SLV 2	-2.03	-3449	986.75	0	0	0	No, e>l/2
SLV 2	0.13	-1497	-214.15	10082	226.66	1.058	Si
SLV 3	-2.03	-4565	992.14	0	0	0	No, e>l/2
SLV 3	0.13	-2050	-201.81	13803	300	1.487	Si
SLV 15	-2.03	-3114	-1173.34	0	0	0	No, e>l/2
SLV 15	0.13	-2613	380.36	17598	369.09	0.97	No, M>Mu
SLV 1	-2.03	-3449	986.75	0	0	0	No, e>l/2
SLV 1	0.13	-1497	-214.15	10082	226.66	1.058	Si

Verifica a taglio nel piano secondo D.M. 17-01-18 (N.T.C.) §7.8.2.2.2 con rottura per scorrimento in combinazioni non sismiche, γM = 3

Comb.	Quota	N	V par	M	σ0	σN	l'	fvd	Vt scorr.	Vt fess.diag.	Vt,lim	c.s.	Verifica
SLU 72	-2.03	-4287	-133	-135.99		28866	0.33	9404	1397			10.49	Si
SLU 72	0.13	-2707	-46	113.55		18226	0.33	7986	1186			25.67	Si
SLU 79	-2.03	-4859	-147	-151.78		32724	0.33	9919	1473			9.99	Si
SLU 79	0.13	-3107	-58	129.28		20923	0.33	8345	1239			21.41	Si
SLU 80	-2.03	-4837	-148	-152.43		32569	0.33	9898	1470			9.91	Si
SLU 80	0.13	-3092	-56	129.23		20824	0.33	8332	1237			22.22	Si
SLU 78	-2.03	-4869	-149	-152.7		32786	0.33	9927	1474			9.92	Si
SLU 78	0.13	-3116	-57	130.04		20984	0.33	8353	1240			21.91	Si
SLU 83	-2.03	-5035	-145	-151.16		33908	0.33	10077	1496			10.33	Si
SLU 83	0.13	-3223	-66	132.29		21704	0.33	8449	1255			18.96	Si
SLU 38	-2.03	-4091	-131	-133.11		27552	0.33	9229	1371			10.49	Si
SLU 38	0.13	-2650	-46	111.57		17844	0.33	7935	1178			25.68	Si
SLU 70	-2.03	-4319	-133	-136.26		29083	0.33	9433	1401			10.51	Si
SLU 70	0.13	-2730	-47	114.36		18386	0.33	8007	1189			25.22	Si
SLU 84	-2.03	-5012	-146	-151.82		33754	0.33	10056	1493			10.24	Si
SLU 84	0.13	-3208	-64	132.24		21606	0.33	8436	1253			19.58	Si
SLU 77	-2.03	-4892	-148	-152.05		32941	0.33	9948	1477			10.01	Si
SLU 77	0.13	-3131	-59	130.09		21083	0.33	8367	1242			21.12	Si
SLU 76	-2.03	-4762	-140	-145.21		32064	0.33	9831	1460			10.43	Si
SLU 76	0.13	-3033	-58	125.48		20427	0.33	8279	1229			21.04	Si

Verifica a taglio nel piano secondo D.M. 17-01-18 (N.T.C.) §7.8.2.2.2 con rottura per scorrimento in combinazioni sismiche, γM = 2

Comb.	Quota	N	V par	M	σ0	σN	l'	fvd	Vt scorr.	Vt fess.diag.	Vt,lim	c.s.	Verifica
SLV 13	-2.03	-1998	-1393	-1178.73		0	0	8333	0			0	No, Vu<V
SLV 13	0.13	-2061	770	368.02		0	0	8333	0			0	No, Vu<V
SLV 15	-2.03	-3114	-1387	-1173.34		0	0	8333	0			0	No, Vu<V
SLV 15	0.13	-2613	749	380.36		99519	0.0584	16250	427			0.57	No, Vu<V
SLV 16	-2.03	-3114	-1387	-1173.34		0	0	8333	0			0	No, Vu<V
SLV 16	0.13	-2613	749	380.36		99519	0.0584	16250	427			0.57	No, Vu<V
SLV 1	-2.03	-3449	1211	986.75		0	0	8333	0			0	No, Vu<V
SLV 1	0.13	-1497	-839	-214.15		50493	0.0659	16250	482			0.57	No, Vu<V
SLV 4	-2.03	-4565	1217	992.14		0	0	8333	0			0	No, Vu<V
SLV 4	0.13	-2050	-860	-201.81		22817	0.1996	12897	1159			1.35	Si

Comb.	Quota	N	V par	M	σ0	σN	l'	fvd	Vt scorr.	Vt fess.diag.	Vt,lim	c.s.	Verifica
SLV 10	-2.03	-1205	-489	-427.1		0	0	8333	0			0	No, Vu<V
SLV 10	0.13	-1219	231	149.85		21466	0.1262	12626	717			3.11	Si
SLV 14	-2.03	-1998	-1393	-1178.73		0	0	8333	0			0	No, Vu<V
SLV 14	0.13	-2061	770	368.02		0	0	8333	0			0	No, Vu<V
SLV 2	-2.03	-3449	1211	986.75		0	0	8333	0			0	No, Vu<V
SLV 2	0.13	-1497	-839	-214.15		50493	0.0659	16250	482			0.57	No, Vu<V
SLV 9	-2.03	-1205	-489	-427.1		0	0	8333	0			0	No, Vu<V
SLV 9	0.13	-1219	231	149.85		21466	0.1262	12626	717			3.11	Si
SLV 3	-2.03	-4565	1217	992.14		0	0	8333	0			0	No, Vu<V
SLV 3	0.13	-2050	-860	-201.81		22817	0.1996	12897	1159			1.35	Si

Verifica a pressoflessione fuori piano D.M. 17-01-18 (N.T.C.)

quota -0.68 Wa 0.08 denominatore 8 γM = 2

Comb.	fd	Sa	σ0	N	M	Mc	Coeff.s.	Verifica
SLV 6	143750	0.24	16484	-2448	19.84	476.48	24.02	Si
SLV 5	143750	0.24	16484	-2448	19.84	476.48	24.02	Si
SLV 9	143750	0.24	17560	-2608	19.84	502.39	25.33	Si
SLV 10	143750	0.24	17560	-2608	19.84	502.39	25.33	Si
SLV 2	143750	0.24	26698	-3965	19.84	697.14	35.14	Si
SLV 1	143750	0.24	26698	-3965	19.84	697.14	35.14	Si
SLV 14	143750	0.24	30283	-4497	19.84	761.05	38.37	Si
SLV 13	143750	0.24	30283	-4497	19.84	761.05	38.37	Si
SLV 3	143750	0.24	36529	-5425	19.84	855.63	43.13	Si
SLV 4	143750	0.24	36529	-5425	19.84	855.63	43.13	Si

Verifica dei meccanismi locali di collasso con analisi cinematica lineare

forza di aggancio al piano = 0 quota mezzeria = -0.68 Wa = 0.08 Ta = 0.0271

Comb.	N top	N base	V orto	α0	M*	e*	a0*	aLim	Verifica
SLV 4	-2914	-4565	10	0.089	353.3	0.953	1.36425	3.47592	No
SLV 3	-2914	-4565	10	0.089	353.3	0.953	1.36425	3.47592	No
SLV 7	-3391	-5358	17	0.087	401.8	0.958	1.31808	3.33245	No
SLV 8	-3391	-5358	17	0.087	401.8	0.958	1.31808	3.33245	No
SLV 11	-3138	-4923	14	0.088	376	0.956	1.33615	3.33245	No
SLV 12	-3138	-4923	14	0.088	376	0.956	1.33615	3.33245	No
SLV 2	-2252	-3449	2	0.094	286.1	0.944	1.45016	3.47592	No
SLV 1	-2252	-3449	2	0.094	286.1	0.944	1.45016	3.47592	No
SLV 16	-2069	-3114	2	0.095	267.5	0.941	1.46752	3.47592	No
SLV 15	-2069	-3114	2	0.095	267.5	0.941	1.46752	3.47592	No

Tabella dei coefficienti di sicurezza minimi

Stato limite	Coeff.s.	Comb.	Verifica
PF_SLU	2.935	SLU 78	Si
V_SLU	9.905	SLU 80	Si
PF_SLV	0	SLV 1	No
V_SLV	0	SLV 1	No
PFFP_SLV	24.02	SLV 5	Si
R_SLV	0.392	SLV 3	No

Maschio 34

Verifiche condotte secondo D.M. 17-01-18 (N.T.C.)

Dati geometrici

X ini.	Y ini.	X fin.	Y fin.	Quota i.	Quota.s	l	Sp.	h netta	h ini.	h fin.	a	a.s.,sx	a.s.,dx
-7.428	1.046	-11.238	1.046	L1	L3	3.81	0.45	2.7	2.7	2.7			

Caratteristiche del materiale

(Circolare 7 21-01-19 C8.5.I) Muratura in mattoni pieni e malta di calce LC2_Corti

fb	fk	fvk0	fmedio	τ0	fv0	μ	ϕ	fv,lim	E	G	FC
600000			345000	9000	20000	0.58	0.77	32500	320000000	128000000	1.2

Verifica a pressoflessione nel piano secondo D.M. 17-01-18 NTC §7.8.2.2.1 in combinazioni non sismiche, γM = 3

Comb.	Quota	N	M	σ0	Mu	c.s.	Verifica
SLU 75	-2.03	-112307	-6287.24	65504	41902.04	6.665	Si
SLU 75	0.13	-93563	-8740.19	54572	58830.4	6.731	Si
SLU 74	-2.03	-113328	-6400.07	66100	40705.09	6.36	Si
SLU 74	0.13	-94474	-9088.11	55103	58229.43	6.407	Si
SLU 81	-2.03	-116569	-6462.33	67990	36715.36	5.681	Si
SLU 81	0.13	-97495	-9517.29	56865	56073.67	5.892	Si
SLU 79	-2.03	-113937	-6706.35	66455	39977.07	5.961	Si
SLU 79	0.13	-95000	-9129.81	55410	57871.6	6.339	Si
SLU 77	-2.03	-114806	-6737.34	66962	38921.08	5.777	Si
SLU 77	0.13	-95786	-9170.28	55868	57323.71	6.251	Si
SLU 83	-2.03	-118048	-6799.6	68853	34800.63	5.118	Si
SLU 83	0.13	-98807	-9599.46	57630	55059.78	5.736	Si
SLU 84	-2.03	-117027	-6686.77	68257	36128.99	5.403	Si
SLU 84	0.13	-97897	-9251.54	57099	55768.42	6.028	Si
SLU 80	-2.03	-112917	-6593.52	65860	41190.99	6.247	Si
SLU 80	0.13	-94090	-8781.89	54879	58485.65	6.66	Si
SLU 82	-2.03	-115549	-6349.5	67395	38002.56	5.985	Si
SLU 82	0.13	-96584	-9169.37	56334	56749.7	6.189	Si
SLU 78	-2.03	-113786	-6624.51	66367	40159.19	6.062	Si
SLU 78	0.13	-94875	-8822.37	55337	57957.28	6.569	Si

Verifica a pressoflessione nel piano secondo D.M. 17-01-18 NTC §7.8.2.2.1 in combinazioni sismiche, γM = 2

Comb.	Quota	N	M	σ0	Mu	c.s.	Verifica
SLV 14	-2.03	-60878	-61436.53	35508	82270.87	1.339	Si
SLV 14	0.13	-37830	-14970.14	22065	59052.98	3.945	Si
SLV 16	-2.03	-78722	-56454.95	45915	93611.59	1.658	Si
SLV 16	0.13	-50662	-13878.37	29549	73171.46	5.272	Si
SLV 4	-2.03	-92121	53554.24	53731	98320.63	1.836	Si
SLV 4	0.13	-88040	2944.13	51351	97232.3	33.026	Si
SLV 1	-2.03	-74277	48572.66	43323	91328.33	1.88	Si
SLV 1	0.13	-75209	1852.36	43866	91836.72	49.578	Si
SLV 10	-2.03	-44750	-28745.15	26101	67038.18	2.332	Si
SLV 10	0.13	-35943	-10356.01	20964	56723.28	5.477	Si
SLV 13	-2.03	-60878	-61436.53	35508	82270.87	1.339	Si
SLV 13	0.13	-37830	-14970.14	22065	59052.98	3.945	Si
SLV 2	-2.03	-74277	48572.66	43323	91328.33	1.88	Si
SLV 2	0.13	-75209	1852.36	43866	91836.72	49.578	Si
SLV 9	-2.03	-44750	-28745.15	26101	67038.18	2.332	Si
SLV 9	0.13	-35943	-10356.01	20964	56723.28	5.477	Si
SLV 15	-2.03	-78722	-56454.95	45915	93611.59	1.658	Si
SLV 15	0.13	-50662	-13878.37	29549	73171.46	5.272	Si
SLV 3	-2.03	-92121	53554.24	53731	98320.63	1.836	Si
SLV 3	0.13	-88040	2944.13	51351	97232.3	33.026	Si

Verifica a taglio nel piano secondo D.M. 17-01-18 (N.T.C.) §7.8.2.2.2 con rottura per scorrimento in combinazioni non sismiche, γM = 3

Comb.	Quota	N	V par	M	σ0	σN	l'	fvd	Vt scorr.	Vt fess.diag.	Vt,lim	c.s.	Verifica
SLU 60	-2.03	-104899	2021	-5493.25		61184	3.81	10833	18574			9.19	Si
SLU 60	0.13	-86816	1026	-8330.02		50636	3.81	10833	18574			18.09	Si
SLU 39	-2.03	-99739	2022	-5781.41		58174	3.81	10833	18574			9.19	Si
SLU 39	0.13	-84215	1118	-8332.58		49119	3.81	10833	18574			16.61	Si
SLU 84	-2.03	-117027	1917	-6686.77		68257	3.81	10833	18574			9.69	Si
SLU 84	0.13	-97897	931	-9251.54		57099	3.81	10833	18574			19.94	Si
SLU 64	-2.03	-97940	1835	-5027.24		57125	3.81	10833	18574			10.12	Si
SLU 64	0.13	-80431	873	-7677.88		46912	3.81	10833	18574			21.29	Si
SLU 62	-2.03	-106377	1853	-5830.52		62046	3.81	10833	18574			10.02	Si
SLU 62	0.13	-88128	882	-8412.19		51401	3.81	10833	18574			21.06	Si
SLU 41	-2.03	-101217	1854	-6118.68		59036	3.81	10833	18574			10.02	Si
SLU 41	0.13	-85528	973	-8414.76		49885	3.81	10833	18574			19.08	Si
SLU 74	-2.03	-113328	2001	-6400.07		66100	3.81	10833	18574			9.28	Si
SLU 74	0.13	-94474	964	-9088.11		55103	3.81	10833	18574			19.27	Si
SLU 82	-2.03	-115549	2085	-6349.5		67395	3.81	10833	18574			8.91	Si
SLU 82	0.13	-96584	1076	-9169.37		56334	3.81	10833	18574			17.26	Si
SLU 81	-2.03	-116569	2305	-6462.33		67990	3.81	10833	18574			8.06	Si
SLU 81	0.13	-97495	1223	-9517.29		56865	3.81	10833	18574			15.19	Si
SLU 83	-2.03	-118048	2137	-6799.6		68853	3.81	10833	18574			8.69	Si
SLU 83	0.13	-98807	1078	-9599.46		57630	3.81	10833	18574			17.23	Si

Verifica a taglio nel piano secondo D.M. 17-01-18 (N.T.C.) §7.8.2.2.2 con rottura per scorrimento in combinazioni sismiche, γM = 2

Comb.	Quota	N	V par	M	σ0	σN	l'	fvd	Vt scorr.	Vt fess.diag.	Vt,lim	c.s.	Verifica
SLV 2	-2.03	-74277	34837	48572.66		43979	3.7532	16250	27445			0.79	No, Vu<V
SLV 2	0.13	-75209	25965	1852.36		43866	3.81	16250	27861			1.07	Si
SLV 3	-2.03	-92121	33119	53554.24		53731	3.81	16250	27861			0.84	No, Vu<V
SLV 3	0.13	-88040	23631	2944.13		51351	3.81	16250	27861			1.18	Si
SLV 5	-2.03	-48770	14068	4257.6		28445	3.81	14022	24041			1.71	Si
SLV 5	0.13	-47156	11818	-5309.26		27504	3.81	13834	23719			2.01	Si
SLV 1	-2.03	-74277	34837	48572.66		43979	3.7532	16250	27445			0.79	No, Vu<V
SLV 1	0.13	-75209	25965	1852.36		43866	3.81	16250	27861			1.07	Si
SLV 14	-2.03	-60878	-30232	-61436.53		50339	2.6875	16250	19652			0.65	No, Vu<V
SLV 14	0.13	-37830	-22235	-14970.14		22065	3.81	12746	21854			0.98	No, Vu<V
SLV 16	-2.03	-78722	-31950	-56454.95		49091	3.5636	16250	26059			0.82	No, Vu<V
SLV 16	0.13	-50662	-24568	-13878.37		29549	3.81	14243	24420			0.99	No, Vu<V
SLV 6	-2.03	-48770	14068	4257.6		28445	3.81	14022	24041			1.71	Si
SLV 6	0.13	-47156	11818	-5309.26		27504	3.81	13834	23719			2.01	Si
SLV 13	-2.03	-60878	-30232	-61436.53		50339	2.6875	16250	19652			0.65	No, Vu<V
SLV 13	0.13	-37830	-22235	-14970.14		22065	3.81	12746	21854			0.98	No, Vu<V
SLV 4	-2.03	-92121	33119	53554.24		53731	3.81	16250	27861			0.84	No, Vu<V
SLV 4	0.13	-88040	23631	2944.13		51351	3.81	16250	27861			1.18	Si
SLV 15	-2.03	-78722	-31950	-56454.95		49091	3.5636	16250	26059			0.82	No, Vu<V
SLV 15	0.13	-50662	-24568	-13878.37		29549	3.81	14243	24420			0.99	No, Vu<V

Verifica a pressoflessione fuori piano D.M. 17-01-18 (N.T.C.)

quota -0.68 Wa 0.08 denominatore 8 γM = 2

Comb.	fd	Sa	σ0	N	M	Mc	Coeff.s.	Verifica
SLV 10	143750	0.24	23779	-40769	229.02	7387.82	32.26	Si
SLV 9	143750	0.24	23779	-40769	229.02	7387.82	32.26	Si
SLV 14	143750	0.24	27519	-47181	229.02	8224.93	35.91	Si
SLV 13	143750	0.24	27519	-47181	229.02	8224.93	35.91	Si
SLV 6	143750	0.24	29448	-50489	229.02	8622.12	37.65	Si
SLV 5	143750	0.24	29448	-50489	229.02	8622.12	37.65	Si
SLV 15	143750	0.24	36394	-62398	229.02	9857.79	43.04	Si
SLV 16	143750	0.24	36394	-62398	229.02	9857.79	43.04	Si
SLV 1	143750	0.24	46417	-79581	229.02	11103.74	48.48	Si
SLV 2	143750	0.24	46417	-79581	229.02	11103.74	48.48	Si

Verifica dei meccanismi locali di collasso con analisi cinematica lineare

forza di aggancio al piano = 0 quota mezzeria = -0.68 Wa = 0.08 Ta = 0.0271

Comb.	N top	N base	V orto	α0	M*	e*	a0*	aLim	Verifica
SLV 4	-79948	-92121	244	0.085	8792	0.977	1.25786	3.47592	No
SLV 3	-79948	-92121	244	0.085	8792	0.977	1.25786	3.47592	No
SLV 7	-83081	-108249	356	0.083	9111.2	0.978	1.23721	3.33245	No
SLV 8	-83081	-108249	356	0.083	9111.2	0.978	1.23721	3.33245	No

Comb.	N top	N base	V orto	α0	M*	e*	a0*	aLim	Verifica
SLV 2	-67959	-74277	67	0.087	7570.8	0.974	1.30216	3.47592	No
SLV 1	-67959	-74277	67	0.087	7570.8	0.974	1.30216	3.47592	No
SLV 11	-73778	-104230	274	0.084	8163.6	0.975	1.2558	3.33245	No
SLV 12	-73778	-104230	274	0.084	8163.6	0.975	1.2558	3.33245	No
SLV 13	-36948	-60878	-206	0.087	4414.8	0.956	1.31826	3.47592	No
SLV 14	-36948	-60878	-206	0.087	4414.8	0.956	1.31826	3.47592	No

Tabella dei coefficienti di sicurezza minimi

Stato limite	Coeff.s.	Comb.	Verifica
PF_SLU	5.118	SLU 83	Si
V_SLU	8.058	SLU 81	Si
PF_SLV	1.339	SLV 13	Si
V_SLV	0.65	SLV 13	No
PFFP_SLV	32.258	SLV 9	Si
R_SLV	0.362	SLV 3	No

Maschio 35

Verifiche condotte secondo D.M. 17-01-18 (N.T.C.)

Dati geometrici

X ini.	Y ini.	X fin.	Y fin.	Quota i.	Quota.s	l	Sp.	h netta	h ini.	h fin.	a	a.s.,sx	a.s.,dx
-6.147	1.046	-6.528	1.046	L1	L3	0.381	0.45	2.7	2.7	2.7			

Caratteristiche del materiale

(Circolare 7 21-01-19 C8.5.I) Muratura in mattoni pieni e malta di calce LC2_Corti

fb	fk	fvk0	fmedio	τ0	fv0	μ	ϕ	fv,lim	E	G	FC
600000			345000	9000	20000	0.58	0.77	32500	320000000	128000000	1.2

Verifica a pressoflessione nel piano secondo D.M. 17-01-18 NTC §7.8.2.2.1 in combinazioni non sismiche, γM = 3

Comb.	Quota	N	M	σ0	Mu	c.s.	Verifica
SLU 39	-2.03	-12813	-239.1	74791	199.63	0.835	No, M>Mu
SLU 39	0.07	-14443	155.38	84304	0	0	No, Rottura per schiacciamento
SLU 56	-2.03	-13230	-250.84	77223	130.94	0.522	No, M>Mu
SLU 56	0.07	-14591	162.69	85165	0	0	No, Rottura per schiacciamento
SLU 40	-2.03	-12262	-239.71	71571	283.3	1.182	Si
SLU 40	0.07	-14271	161.94	83297	0	0	No, Rottura per schiacciamento
SLU 42	-2.03	-12450	-251.24	72670	255.67	1.018	Si
SLU 42	0.07	-14500	171.52	84638	0	0	No, Rottura per schiacciamento
SLU 53	-2.03	-13042	-239.32	76124	162.57	0.679	No, M>Mu
SLU 53	0.07	-14361	153.1	83825	0	0	No, Rottura per schiacciamento
SLU 57	-2.03	-12678	-251.45	74003	220.87	0.878	No, M>Mu
SLU 57	0.07	-14418	169.24	84159	0	0	No, Rottura per schiacciamento
SLU 37	-2.03	-12481	-246.73	72854	250.97	1.017	Si
SLU 37	0.07	-14031	163.52	81896	0	0	No, Rottura per schiacciamento
SLU 54	-2.03	-12490	-239.92	72904	249.67	1.041	Si
SLU 54	0.07	-14189	159.65	82818	0	0	No, Rottura per schiacciamento
SLU 83	-2.03	-15160	-285.33	88491	0	0	No, Rottura per schiacciamento
SLU 83	0.07	-16949	185.39	98932	0	0	No, Rottura per schiacciamento
SLU 41	-2.03	-13002	-250.63	75890	169.18	0.675	No, M>Mu
SLU 41	0.07	-14673	164.97	85644	0	0	No, Rottura per schiacciamento

Verifica a pressoflessione nel piano secondo D.M. 17-01-18 NTC §7.8.2.2.1 in combinazioni sismiche, γM = 2

Comb.	Quota	N	M	σ0	Mu	c.s.	Verifica
SLV 13	-2.03	-7778	-1388.7	45401	930.48	0.67	No, M>Mu
SLV 13	0.07	-11567	1188	67518	985.19	0.829	No, M>Mu
SLV 1	-2.03	-8772	1125.98	51201	970.08	0.862	No, M>Mu
SLV 1	0.07	-8930	-1075.96	52127	974.74	0.906	No, M>Mu
SLV 11	-2.03	-14902	-693.14	86985	817.28	1.179	Si
SLV 11	0.07	-13041	625.68	76119	935.95	1.496	Si
SLV 14	-2.03	-7778	-1388.7	45401	930.48	0.67	No, M>Mu
SLV 14	0.07	-11567	1188	67518	985.19	0.829	No, M>Mu
SLV 4	-2.03	-11899	1040.79	69457	977.53	0.939	No, M>Mu
SLV 4	0.07	-10037	-969.78	58583	994.52	1.026	Si
SLV 15	-2.03	-10906	-1473.89	63657	994.45	0.675	No, M>Mu
SLV 15	0.07	-12673	1294.19	73974	951.92	0.736	No, M>Mu
SLV 2	-2.03	-8772	1125.98	51201	970.08	0.862	No, M>Mu
SLV 2	0.07	-8930	-1075.96	52127	974.74	0.906	No, M>Mu
SLV 3	-2.03	-11899	1040.79	69457	977.53	0.939	No, M>Mu
SLV 3	0.07	-10037	-969.78	58583	994.52	1.026	Si
SLV 12	-2.03	-14902	-693.14	86985	817.28	1.179	Si
SLV 12	0.07	-13041	625.68	76119	935.95	1.496	Si
SLV 16	-2.03	-10906	-1473.89	63657	994.45	0.675	No, M>Mu
SLV 16	0.07	-12673	1294.19	73974	951.92	0.736	No, M>Mu

Verifica a taglio nel piano secondo D.M. 17-01-18 (N.T.C.) §7.8.2.2.2 con rottura per scorrimento in combinazioni non sismiche, γM = 3

Comb.	Quota	N	V par	M	σ0	σN	I'	fvd	Vt scorr.	Vt fess.diag.	Vt,lim	c.s.	Verifica
SLU 75	-2.03	-14009	-310	-273.52		81772	0.3807	10833	1856			5.98	Si
SLU 75	0.07	-16031	-314	183.23		93575	0.3807	10833	1856			5.91	Si
SLU 79	-2.03	-14640	-304	-281.43		85455	0.3807	10833	1856			6.11	Si
SLU 79	0.07	-16307	-306	183.94		95183	0.3807	10833	1856			6.07	Si
SLU 80	-2.03	-14089	-319	-282.04		82235	0.3807	10833	1856			5.82	Si
SLU 80	0.07	-16135	-322	190.5		94177	0.3807	10833	1856			5.76	Si
SLU 77	-2.03	-14749	-307	-284.45		86091	0.3807	10833	1856			6.05	Si
SLU 77	0.07	-16433	-309	186.26		95922	0.3807	10833	1856			6.01	Si
SLU 83	-2.03	-15160	-310	-285.33		88491	0.3807	10833	1856			5.98	Si
SLU 83	0.07	-16949	-312	185.39		98932	0.3807	10833	1856			5.94	Si
SLU 84	-2.03	-14609	-325	-285.94		85272	0.3807	10833	1856			5.71	Si
SLU 84	0.07	-16777	-329	191.95		97925	0.3807	10833	1856			5.64	Si
SLU 78	-2.03	-14198	-322	-285.05		82871	0.3807	10833	1856			5.77	Si
SLU 78	0.07	-16261	-326	192.82		94915	0.3807	10833	1856			5.7	Si
SLU 82	-2.03	-14421	-314	-274.41		84173	0.3807	10833	1856			5.91	Si
SLU 82	0.07	-16547	-318	182.36		96585	0.3807	10833	1856			5.84	Si
SLU 73	-2.03	-13344	-306	-259.39		77891	0.3807	10833	1856			6.07	Si
SLU 73	0.07	-15560	-311	175.69		90825	0.3807	10833	1856			5.97	Si
SLU 76	-2.03	-13533	-317	-270.91		78990	0.3807	10833	1856			5.85	Si
SLU 76	0.07	-15790	-322	185.28		92166	0.3807	10833	1856			5.76	Si

Verifica a taglio nel piano secondo D.M. 17-01-18 (N.T.C.) §7.8.2.2.2 con rottura per scorrimento in combinazioni sismiche, γM = 2

Comb.	Quota	N	V par	M	σ0	σN	I'	fvd	Vt scorr.	Vt fess.diag.	Vt,lim	c.s.	Verifica
SLV 16	-2.03	-10906	-1439	-1473.89		146321	0.1656	16250	1211			0.84	No, Vu<V
SLV 16	0.07	-12673	-1195	1294.19		106390	0.2647	16250	1936			1.62	Si
SLV 14	-2.03	-7778	-1448	-1388.7		487452	0.0355	16250	259			0.18	No, Vu<V
SLV 14	0.07	-11567	-1215	1188		97753	0.263	16250	1923			1.58	Si
SLV 15	-2.03	-10906	-1439	-1473.89		146321	0.1656	16250	1211			0.84	No, Vu<V
SLV 15	0.07	-12673	-1195	1294.19		106390	0.2647	16250	1936			1.62	Si
SLV 1	-2.03	-8772	1064	1125.98		104810	0.186	16250	1360			1.28	Si
SLV 1	0.07	-8930	817	-1075.96		94671	0.2096	16250	1533			1.88	Si
SLV 9	-2.03	-4477	-579	-409.17		33511	0.2969	15035	2009			3.47	Si
SLV 9	0.07	-9354	-528	271.73		54599	0.3807	16250	2784			5.27	Si
SLV 13	-2.03	-7778	-1448	-1388.7		487452	0.0355	16250	259			0.18	No, Vu<V
SLV 13	0.07	-11567	-1215	1188		97753	0.263	16250	1923			1.58	Si
SLV 2	-2.03	-8772	1064	1125.98		104810	0.186	16250	1360			1.28	Si
SLV 2	0.07	-8930	817	-1075.96		94671	0.2096	16250	1533			1.88	Si
SLV 3	-2.03	-11899	1073	1040.79		85667	0.3087	16250	2257			2.1	Si
SLV 3	0.07	-10037	838	-969.78		79316	0.2812	16250	2056			2.45	Si
SLV 4	-2.03	-11899	1073	1040.79		85667	0.3087	16250	2257			2.1	Si
SLV 4	0.07	-10037	838	-969.78		79316	0.2812	16250	2056			2.45	Si
SLV 10	-2.03	-4477	-579	-409.17		33511	0.2969	15035	2009			3.47	Si
SLV 10	0.07	-9354	-528	271.73		54599	0.3807	16250	2784			5.27	Si

Verifica a pressoflessione fuori piano D.M. 17-01-18 (N.T.C.)

quota -0.68 Wa 0.08 denominatore 8 γM = 2

Comb.	fd	Sa	σ0	N	M	Mc	Coeff.s.	Verifica
SLV 6	143750	0.24	41458	-7103	22.89	1055.86	46.14	Si
SLV 5	143750	0.24	41458	-7103	22.89	1055.86	46.14	Si
SLV 1	143750	0.24	44950	-7701	22.89	1095.28	47.86	Si
SLV 2	143750	0.24	44950	-7701	22.89	1095.28	47.86	Si
SLV 10	143750	0.24	46853	-8027	22.89	1113.52	48.66	Si
SLV 9	143750	0.24	46853	-8027	22.89	1113.52	48.66	Si
SLV 12	143750	0.24	74813	-12817	22.89	1118.12	48.86	Si
SLV 11	143750	0.24	74813	-12817	22.89	1118.12	48.86	Si
SLV 16	143750	0.24	71321	-12219	22.89	1144.5	50.01	Si
SLV 15	143750	0.24	71321	-12219	22.89	1144.5	50.01	Si

Verifica dei meccanismi locali di collasso con analisi cinematica lineare

forza di aggancio al piano = 0 quota mezzeria = -0.68 Wa = 0.08 Ta = 0.0271

Comb.	N top	N base	V orto	α0	M*	e*	a0*	aLim	Verifica
SLV 10	-2427	-4477	530	0	312.8	0.941	0	3.33245	No
SLV 7	-2849	-15201	-506	0	355.5	0.947	0	3.33245	No
SLV 8	-2849	-15201	-506	0	355.5	0.947	0	3.33245	No
SLV 5	-2359	-4775	558	0	305.9	0.94	0	3.33245	No
SLV 9	-2427	-4477	530	0	312.8	0.941	0	3.33245	No
SLV 12	-2917	-14902	-535	0	362.4	0.948	0	3.33245	No
SLV 6	-2359	-4775	558	0	305.9	0.94	0	3.33245	No
SLV 11	-2917	-14902	-535	0	362.4	0.948	0	3.33245	No
SLV 2	-2451	-8772	219	0.019	315.2	0.942	0.29467	3.47592	No
SLV 1	-2451	-8772	219	0.019	315.2	0.942	0.29467	3.47592	No

Tabella dei coefficienti di sicurezza minimi

Stato limite	Coeff.s.	Comb.	Verifica
PF_SLU	0	SLU 35	No
V_SLU	5.64	SLU 84	Si
PF_SLV	0.67	SLV 13	No
V_SLV	0.179	SLV 13	No
PFFP_SLV	46.138	SLV 5	Si
R_SLV	0	SLV 5	No

Maschio 36

Verifiche condotte secondo D.M. 17-01-18 (N.T.C.)

Dati geometrici

X ini.	Y ini.	X fin.	Y fin.	Quota i.	Quota.s	l	Sp.	h netta	h ini.	h fin.	a	a.s.,sx	a.s.,dx
-0.143	1.046	-5.147	1.046	L1	L3	5.004	0.45	2.7	2.7	2.7			

Caratteristiche del materiale

(Circolare 7 21-01-19 C8.5.I) Muratura in mattoni pieni e malta di calce LC2_Corti

fb	fk	fvk0	fmedio	τ0	fv0	μ	ϕ	fv,lim	E	G	FC
600000			345000	9000	20000	0.58	0.77	32500	320000000	128000000	1.2

Verifica a pressoflessione nel piano secondo D.M. 17-01-18 NTC §7.8.2.2.1 in combinazioni non sismiche, γM = 3

Comb.	Quota	N	M	σ0	Mu	c.s.	Verifica
SLU 77	-2.03	-131157	-1827.37	58249	93494.12	51.163	Si
SLU 77	0.07	-132678	5381.53	58924	91826.08	17.063	Si
SLU 83	-2.03	-134556	-900.5	59758	89678.31	99.588	Si
SLU 83	0.07	-136408	6411.62	60581	87466.73	13.642	Si
SLU 41	-2.03	-114380	-320.88	50798	107709.63	335.666	Si
SLU 41	0.07	-117081	6692.44	51997	105939.75	15.83	Si
SLU 39	-2.03	-112831	153.07	50110	108635.08	709.707	Si
SLU 39	0.07	-115298	6709.21	51206	107130.57	15.968	Si
SLU 81	-2.03	-133007	-426.54	59070	91456.47	214.413	Si
SLU 81	0.07	-134625	6428.38	59789	89597.69	13.938	Si
SLU 82	-2.03	-131901	-697.26	58579	92686.43	132.93	Si
SLU 82	0.07	-133391	5886.33	59241	91022.23	15.463	Si
SLU 42	-2.03	-113274	-591.6	50307	108377.32	183.194	Si
SLU 42	0.07	-115847	6150.38	51449	106773.44	17.36	Si
SLU 84	-2.03	-133450	-1171.21	59267	90955.04	77.659	Si
SLU 84	0.07	-135174	5869.56	60033	88951.32	15.155	Si
SLU 79	-2.03	-130330	-1742.16	57881	94374.91	54.171	Si
SLU 79	0.07	-131748	5337.54	58511	92853.3	17.396	Si
SLU 74	-2.03	-129608	-1353.41	57561	95128.61	70.288	Si
SLU 74	0.07	-130895	5398.3	58132	93775.57	17.371	Si

Verifica a pressoflessione nel piano secondo D.M. 17-01-18 NTC §7.8.2.2.1 in combinazioni sismiche, γM = 2

Comb.	Quota	N	M	σ0	Mu	c.s.	Verifica
SLV 15	-2.03	-96342	-60222.76	42787	156630.23	2.601	Si
SLV 15	0.07	-117946	-8467.72	52382	168581.97	19.909	Si
SLV 2	-2.03	-80966	57994.83	35958	142953.01	2.465	Si
SLV 2	0.07	-58688	13499.87	26064	115508.53	8.556	Si
SLV 9	-2.03	-92650	-25565.7	41147	153738.27	6.013	Si
SLV 9	0.07	-96894	-16158.59	43032	157040.65	9.719	Si
SLV 13	-2.03	-97272	-63921.35	43200	157319.54	2.461	Si
SLV 13	0.07	-117774	-16933.52	52305	168520.35	9.952	Si
SLV 4	-2.03	-80036	61693.42	35545	141987.91	2.302	Si
SLV 4	0.07	-58860	21965.67	26141	115754.92	5.27	Si
SLV 3	-2.03	-80036	61693.42	35545	141987.91	2.302	Si
SLV 3	0.07	-58860	21965.67	26141	115754.92	5.27	Si
SLV 1	-2.03	-80966	57994.83	35958	142953.01	2.465	Si
SLV 1	0.07	-58688	13499.87	26064	115508.53	8.556	Si
SLV 10	-2.03	-92650	-25565.7	41147	153738.27	6.013	Si
SLV 10	0.07	-96894	-16158.59	43032	157040.65	9.719	Si
SLV 16	-2.03	-96342	-60222.76	42787	156630.23	2.601	Si
SLV 16	0.07	-117946	-8467.72	52382	168581.97	19.909	Si
SLV 14	-2.03	-97272	-63921.35	43200	157319.54	2.461	Si
SLV 14	0.07	-117774	-16933.52	52305	168520.35	9.952	Si

Verifica a taglio nel piano secondo D.M. 17-01-18 (N.T.C.) §7.8.2.2.2 con rottura per scorrimento in combinazioni non sismiche, γM = 3

Comb.	Quota	N	V par	M	σ0	σN	l'	fvd	Vt scorr.	Vt fess.diag.	Vt,lim	c.s.	Verifica
SLU 83	-2.03	-134556	-18597	-900.5		59758	5.0037	10833	24393			1.31	Si
SLU 83	0.07	-136408	-18790	6411.62		60581	5.0037	10833	24393			1.3	Si
SLU 81	-2.03	-133007	-18103	-426.54		59070	5.0037	10833	24393			1.35	Si
SLU 81	0.07	-134625	-18292	6428.38		59789	5.0037	10833	24393			1.33	Si
SLU 74	-2.03	-129608	-17661	-1353.41		57561	5.0037	10833	24393			1.38	Si
SLU 74	0.07	-130895	-17847	5398.3		58132	5.0037	10833	24393			1.37	Si
SLU 82	-2.03	-131901	-17822	-697.26		58579	5.0037	10833	24393			1.37	Si
SLU 82	0.07	-133391	-18010	5886.33		59241	5.0037	10833	24393			1.35	Si
SLU 75	-2.03	-128501	-17380	-1624.13		57069	5.0037	10833	24393			1.4	Si
SLU 75	0.07	-129660	-17565	4856.24		57584	5.0037	10833	24393			1.39	Si
SLU 77	-2.03	-131157	-18156	-1827.37		58249	5.0037	10833	24393			1.34	Si
SLU 77	0.07	-132678	-18345	5381.53		58924	5.0037	10833	24393			1.33	Si
SLU 84	-2.03	-133450	-18316	-1171.21		59267	5.0037	10833	24393			1.33	Si
SLU 84	0.07	-135174	-18508	5869.56		60033	5.0037	10833	24393			1.32	Si
SLU 79	-2.03	-130330	-17973	-1742.16		57881	5.0037	10833	24393			1.36	Si
SLU 79	0.07	-131748	-18160	5337.54		58511	5.0037	10833	24393			1.34	Si
SLU 78	-2.03	-130051	-17874	-2098.08		57757	5.0037	10833	24393			1.36	Si
SLU 78	0.07	-131443	-18063	4839.47		58376	5.0037	10833	24393			1.35	Si
SLU 80	-2.03	-129223	-17691	-2012.88		57390	5.0037	10833	24393			1.38	Si
SLU 80	0.07	-130514	-17879	4795.48		57963	5.0037	10833	24393			1.36	Si

Verifica a taglio nel piano secondo D.M. 17-01-18 (N.T.C.) §7.8.2.2.2 con rottura per scorrimento in combinazioni sismiche, γM = 2

Comb.	Quota	N	V par	M	σ0	σN	l'	fvd	Vt scorr.	Vt fess.diag.	Vt,lim	c.s.	Verifica
SLV 13	-2.03	-97272	-52962	-63921.35		43200	5.0037	16250	36590			0.69	No, Vu<V
SLV 13	0.07	-117774	-52207	-16933.52		52305	5.0037	16250	36590			0.7	No, Vu<V
SLV 1	-2.03	-80966	33654	57994.83		35958	5.0037	15525	34957			1.04	Si
SLV 1	0.07	-58688	32617	13499.87		26064	5.0037	13546	30502			0.94	No, Vu<V
SLV 12	-2.03	-89550	-29645	-13237.08		39771	5.0037	16250	36590			1.23	Si
SLV 12	0.07	-97467	-29456	12060.73		43286	5.0037	16250	36590			1.24	Si
SLV 4	-2.03	-80036	30424	61693.42		35545	5.0037	15442	34771			1.14	Si
SLV 4	0.07	-58860	29415	21965.67		26141	5.0037	13561	30536			1.04	Si
SLV 15	-2.03	-96342	-56192	-60222.76		42787	5.0037	16250	36590			0.65	No, Vu<V
SLV 15	0.07	-117946	-55409	-8467.72		52382	5.0037	16250	36590			0.66	No, Vu<V

Comb.	Quota	N	V par	M	σ0	σN	l'	fvd	Vt scorr.	Vt fess.diag.	Vt,lim	c.s.	Verifica
SLV 16	-2.03	-96342	-56192	-60222.76		42787	5.0037	16250	36590			0.65	No, Vu<V
SLV 16	0.07	-117946	-55409	-8467.72		52382	5.0037	16250	36590			0.66	No, Vu<V
SLV 3	-2.03	-80036	30424	61693.42		35545	5.0037	15442	34771			1.14	Si
SLV 3	0.07	-58860	29415	21965.67		26141	5.0037	13561	30536			1.04	Si
SLV 14	-2.03	-97272	-52962	-63921.35		43200	5.0037	16250	36590			0.69	No, Vu<V
SLV 14	0.07	-117774	-52207	-16933.52		52305	5.0037	16250	36590			0.7	No, Vu<V
SLV 11	-2.03	-89550	-29645	-13237.08		39771	5.0037	16250	36590			1.23	Si
SLV 11	0.07	-97467	-29456	12060.73		43286	5.0037	16250	36590			1.24	Si
SLV 2	-2.03	-80966	33654	57994.83		35958	5.0037	15525	34957			1.04	Si
SLV 2	0.07	-58688	32617	13499.87		26064	5.0037	13546	30502			0.94	No, Vu<V

Verifica a pressoflessione fuori piano D.M. 17-01-18 (N.T.C.)

quota -0.68 Wa 0.08 denominatore 8 γM = 2

Comb.	fd	Sa	σ0	N	M	Mc	Coeff.s.	Verifica
SLV 3	143750	0.24	30398	-68446	300.78	11569.09	38.46	Si
SLV 4	143750	0.24	30398	-68446	300.78	11569.09	38.46	Si
SLV 2	143750	0.24	30445	-68551	300.78	11580.91	38.5	Si
SLV 1	143750	0.24	30445	-68551	300.78	11580.91	38.5	Si
SLV 7	143750	0.24	36261	-81647	300.78	12918.92	42.95	Si
SLV 8	143750	0.24	36261	-81647	300.78	12918.92	42.95	Si
SLV 6	143750	0.24	36416	-81996	300.78	12950.74	43.06	Si
SLV 5	143750	0.24	36416	-81996	300.78	12950.74	43.06	Si
SLV 11	143750	0.24	41333	-93067	300.78	13856.69	46.07	Si
SLV 12	143750	0.24	41333	-93067	300.78	13856.69	46.07	Si

Verifica dei meccanismi locali di collasso con analisi cinematica lineare

forza di aggancio al piano = 0 quota mezzeria = -0.68 Wa = 0.08 Ta = 0.0271

Comb.	N top	N base	V orto	α0	M*	e*	a0*	aLim	Verifica
SLV 6	-71158	-87758	1286	0.073	8100.6	0.968	1.08869	3.33245	No
SLV 5	-71158	-87758	1286	0.073	8100.6	0.968	1.08869	3.33245	No
SLV 12	-84212	-89550	-1296	0.074	9429.7	0.972	1.1058	3.33245	No
SLV 11	-84212	-89550	-1296	0.074	9429.7	0.972	1.1058	3.33245	No
SLV 1	-54198	-80966	815	0.077	6374.8	0.96	1.17054	3.47592	No
SLV 2	-54198	-80966	815	0.077	6374.8	0.96	1.17054	3.47592	No
SLV 15	-101172	-96342	-825	0.08	11157.2	0.976	1.18909	3.47592	No
SLV 16	-101172	-96342	-825	0.08	11157.2	0.976	1.18909	3.47592	No
SLV 7	-70017	-84658	-1011	0.076	7984.4	0.967	1.14145	3.33245	No
SLV 8	-70017	-84658	-1011	0.076	7984.4	0.967	1.14145	3.33245	No

Tabella dei coefficienti di sicurezza minimi

Stato limite	Coeff.s.	Comb.	Verifica
PF_SLU	13.642	SLU 83	Si
V_SLU	1.298	SLU 83	Si
PF_SLV	2.302	SLV 3	Si
V_SLV	0.651	SLV 15	No
PFFP_SLV	38.464	SLV 3	Si
R_SLV	0.327	SLV 5	No

Maschio 37

Verifiche condotte secondo D.M. 17-01-18 (N.T.C.)

Dati geometrici

X ini.	Y ini.	X fin.	Y fin.	Quota i.	Quota.s	l	Sp.	h netta	h ini.	h fin.	a	a.s.,sx	a.s.,dx
-11.013	-4.725	-11.013	-1.915	L1	L2	2.81	0.3	2.03	2.03	2.03			

Caratteristiche del materiale

(Circolare 7 21-01-19 C8.5.I) Muratura in mattoni pieni e malta di calce LC2_Corti

fb	fk	fvk0	fmedio	τ0	fv0	μ	ϕ	fv,lim	E	G	FC
600000			345000	9000	20000	0.58	0.77	32500	320000000	128000000	1.2

Verifica a pressoflessione nel piano secondo D.M. 17-01-18 NTC §7.8.2.2.1 in combinazioni non sismiche, γM = 3

Comb.	Quota	N	M	σ0	Mu	c.s.	Verifica
SLU 78	-2.03	-53028	2199.53	62903	16971.19	7.716	Si
SLU 78	0	-49343	905.11	58532	19512.19	21.558	Si
SLU 74	-2.03	-52626	2181.36	62426	17275.81	7.92	Si
SLU 74	0	-48742	887.47	57819	19874.16	22.394	Si
SLU 79	-2.03	-52969	2188.36	62833	17016.61	7.776	Si
SLU 79	0	-49111	883.54	58257	19653.56	22.244	Si
SLU 81	-2.03	-53829	2248.62	63853	16345.71	7.269	Si
SLU 81	0	-49807	947.23	59082	19223.2	20.294	Si
SLU 83	-2.03	-54379	2292.75	64506	15900.3	6.935	Si
SLU 83	0	-50376	989.75	59757	18856.23	19.052	Si
SLU 82	-2.03	-53681	2222.66	63677	16463.34	7.407	Si
SLU 82	0	-49839	922.35	59120	19202.75	20.819	Si
SLU 75	-2.03	-52478	2155.4	62250	17386.15	8.066	Si
SLU 75	0	-48774	862.59	57857	19855.12	23.018	Si
SLU 80	-2.03	-52821	2162.4	62657	17129.03	7.921	Si
SLU 80	0	-49143	858.66	58295	19634.03	22.866	Si
SLU 77	-2.03	-53176	2225.49	63079	16857.51	7.575	Si
SLU 77	0	-49311	929.99	58494	19531.99	21.002	Si
SLU 84	-2.03	-54231	2266.79	64331	16021.27	7.068	Si
SLU 84	0	-50408	964.87	59795	18835.03	19.521	Si

Verifica a pressoflessione nel piano secondo D.M. 17-01-18 NTC §7.8.2.2.1 in combinazioni sismiche, γM = 2

Comb.	Quota	N	M	σ0	Mu	c.s.	Verifica
SLV 10	-2.03	-51453	-4771.14	61034	36181.05	7.583	Si
SLV 10	0	-50527	-3524.72	59937	36168.1	10.261	Si
SLV 8	-2.03	-22294	7521.68	26445	24543.63	3.263	Si
SLV 8	0	-17630	4282.14	20913	20530.65	4.794	Si
SLV 16	-2.03	-21821	3929.25	25885	24164.25	6.15	Si
SLV 16	0	-22896	2.2	27159	25018.38	1000	Si
SLV 5	-2.03	-57331	-5162	68007	35717.81	6.919	Si
SLV 5	0	-53967	-2672.86	64017	36098.27	13.505	Si
SLV 7	-2.03	-22294	7521.68	26445	24543.63	3.263	Si
SLV 7	0	-17630	4282.14	20913	20530.65	4.794	Si
SLV 9	-2.03	-51453	-4771.14	61034	36181.05	7.583	Si
SLV 9	0	-50527	-3524.72	59937	36168.1	10.261	Si
SLV 15	-2.03	-21821	3929.25	25885	24164.25	6.15	Si
SLV 15	0	-22896	2.2	27159	25018.38	1000	Si
SLV 6	-2.03	-57331	-5162	68007	35717.81	6.919	Si
SLV 6	0	-53967	-2672.86	64017	36098.27	13.505	Si
SLV 11	-2.03	-16416	7912.54	19473	19388.74	2.45	Si
SLV 11	0	-14190	3430.28	16833	17191.01	5.012	Si
SLV 12	-2.03	-16416	7912.54	19473	19388.74	2.45	Si
SLV 12	0	-14190	3430.28	16833	17191.01	5.012	Si

Verifica a taglio nel piano secondo D.M. 17-01-18 (N.T.C.) §7.8.2.2.2 con rottura per scorrimento in combinazioni non sismiche, γM = 3

Comb.	Quota	N	V par	M	σ0	σN	l'	fvd	Vt scorr.	Vt fess.diag.	Vt,lim	c.s.	Verifica
SLU 75	-2.03	-52478	-6364	2155.4		62250	2.81	10833	9133			1.44	Si
SLU 75	0	-48774	-2831	862.59		57857	2.81	10833	9133			3.23	Si
SLU 84	-2.03	-54231	-6577	2266.79		64331	2.81	10833	9133			1.39	Si
SLU 84	0	-50408	-2927	964.87		59795	2.81	10833	9133			3.12	Si
SLU 83	-2.03	-54379	-6574	2292.75		64506	2.81	10833	9133			1.39	Si
SLU 83	0	-50376	-2905	989.75		59757	2.81	10833	9133			3.14	Si
SLU 77	-2.03	-53176	-6443	2225.49		63079	2.81	10833	9133			1.42	Si
SLU 77	0	-49311	-2854	929.99		58494	2.81	10833	9133			3.2	Si
SLU 80	-2.03	-52821	-6411	2162.4		62657	2.81	10833	9133			1.42	Si
SLU 80	0	-49143	-2860	858.66		58295	2.81	10833	9133			3.19	Si
SLU 78	-2.03	-53028	-6446	2199.53		62903	2.81	10833	9133			1.42	Si
SLU 78	0	-49343	-2876	905.11		58532	2.81	10833	9133			3.18	Si
SLU 79	-2.03	-52969	-6408	2188.36		62833	2.81	10833	9133			1.43	Si
SLU 79	0	-49111	-2837	883.54		58257	2.81	10833	9133			3.22	Si
SLU 81	-2.03	-53829	-6492	2248.62		63853	2.81	10833	9133			1.41	Si
SLU 81	0	-49807	-2860	947.23		59082	2.81	10833	9133			3.19	Si
SLU 82	-2.03	-53681	-6496	2222.66		63677	2.81	10833	9133			1.41	Si
SLU 82	0	-49839	-2883	922.35		59120	2.81	10833	9133			3.17	Si
SLU 74	-2.03	-52626	-6361	2181.36		62426	2.81	10833	9133			1.44	Si
SLU 74	0	-48742	-2809	887.47		57819	2.81	10833	9133			3.25	Si

Verifica a taglio nel piano secondo D.M. 17-01-18 (N.T.C.) §7.8.2.2.2 con rottura per scorrimento in combinazioni sismiche, γM = 2

Comb.	Quota	N	V par	M	σ0	σN	l'	fvd	Vt scorr.	Vt fess.diag.	Vt,lim	c.s.	Verifica
SLV 2	-2.03	-51925	-11850	-1178.72		61595	2.81	16250	13699			1.16	Si
SLV 2	0	-45261	-6654	755.22		53690	2.81	16250	13699			2.06	Si
SLV 5	-2.03	-57331	-20816	-5162		68007	2.81	16250	13699			0.66	No, Vu<V
SLV 5	0	-53967	-17529	-2672.86		64017	2.81	16250	13699			0.78	No, Vu<V
SLV 7	-2.03	-22294	10323	7521.68		26445	2.81	13622	11484			1.11	Si
SLV 7	0	-17630	13617	4282.14		20913	2.81	12516	10551			0.77	No, Vu<V
SLV 12	-2.03	-16416	11979	7912.54		19761	2.769	12286	10206			0.85	No, Vu<V
SLV 12	0	-14190	13640	3430.28		16833	2.81	11700	9863			0.72	No, Vu<V
SLV 10	-2.03	-51453	-19160	-4771.14		61034	2.81	16250	13699			0.71	No, Vu<V
SLV 10	0	-50527	-17506	-3524.72		59937	2.81	16250	13699			0.78	No, Vu<V
SLV 1	-2.03	-51925	-11850	-1178.72		61595	2.81	16250	13699			1.16	Si
SLV 1	0	-45261	-6654	755.22		53690	2.81	16250	13699			2.06	Si
SLV 9	-2.03	-51453	-19160	-4771.14		61034	2.81	16250	13699			0.71	No, Vu<V
SLV 9	0	-50527	-17506	-3524.72		59937	2.81	16250	13699			0.78	No, Vu<V
SLV 11	-2.03	-16416	11979	7912.54		19761	2.769	12286	10206			0.85	No, Vu<V
SLV 11	0	-14190	13640	3430.28		16833	2.81	11700	9863			0.72	No, Vu<V
SLV 8	-2.03	-22294	10323	7521.68		26445	2.81	13622	11484			1.11	Si
SLV 8	0	-17630	13617	4282.14		20913	2.81	12516	10551			0.77	No, Vu<V
SLV 6	-2.03	-57331	-20816	-5162		68007	2.81	16250	13699			0.66	No, Vu<V
SLV 6	0	-53967	-17529	-2672.86		64017	2.81	16250	13699			0.78	No, Vu<V

Verifica a pressoflessione fuori piano D.M. 17-01-18 (N.T.C.)

quota -1.015 Wa 0.05 denominatore 8 γM = 2

Comb.	fd	Sa	σ0	N	M	Mc	Coeff.s.	Verifica
SLV 11	143750	0.24	17547	-14792	63.66	1900.2	29.85	Si
SLV 12	143750	0.24	17547	-14792	63.66	1900.2	29.85	Si
SLV 8	143750	0.24	23237	-19589	63.66	2379.56	37.38	Si
SLV 7	143750	0.24	23237	-19589	63.66	2379.56	37.38	Si
SLV 15	143750	0.24	25619	-21597	63.66	2560.31	40.22	Si
SLV 16	143750	0.24	25619	-21597	63.66	2560.31	40.22	Si
SLV 13	143750	0.24	38228	-32226	63.66	3321.6	52.18	Si
SLV 14	143750	0.24	38228	-32226	63.66	3321.6	52.18	Si
SLV 4	143750	0.24	44586	-37587	63.66	3580.69	56.25	Si
SLV 3	143750	0.24	44586	-37587	63.66	3580.69	56.25	Si

Verifica dei meccanismi locali di collasso con analisi cinematica lineare

forza di aggancio al piano = 0 quota mezzeria = -1.015 Wa = 0.05 Ta = 0.0229

Comb.	N top	N base	V orto	α0	M*	e*	a0*	aLim	Verifica
SLV 1	-45261	-51925	168	0.073	4850.6	0.984	1.07381	3.18636	No
SLV 2	-45261	-51925	168	0.073	4850.6	0.984	1.07381	3.18636	No
SLV 4	-34360	-41414	113	0.074	3739.8	0.98	1.09611	3.18636	No
SLV 3	-34360	-41414	113	0.074	3739.8	0.98	1.09611	3.18636	No

Comb.	N top	N base	V orto	α0	M*	e*	a0*	aLim	Verifica
SLV 16	-22896	-21821	-108	0.074	2572	0.971	1.10944	3.18636	No
SLV 15	-22896	-21821	-108	0.074	2572	0.971	1.10944	3.18636	No
SLV 6	-53967	-57331	155	0.073	5737.8	0.987	1.07747	3.07653	No
SLV 5	-53967	-57331	155	0.073	5737.8	0.987	1.07747	3.07653	No
SLV 13	-33797	-32332	-53	0.076	3682.4	0.98	1.12193	3.18636	No
SLV 14	-33797	-32332	-53	0.076	3682.4	0.98	1.12193	3.18636	No

Tabella dei coefficienti di sicurezza minimi

Stato limite	Coeff.s.	Comb.	Verifica
PF_SLU	6.935	SLU 83	Si
V_SLU	1.388	SLU 84	Si
PF_SLV	2.45	SLV 11	Si
V_SLV	0.658	SLV 5	No
PFFP_SLV	29.851	SLV 11	Si
R_SLV	0.337	SLV 1	No

Maschio 38

Verifiche condotte secondo D.M. 17-01-18 (N.T.C.)

Dati geometrici

X ini.	Y ini.	X fin.	Y fin.	Quota i.	Quota.s	l	Sp.	h netta	h ini.	h fin.	a	a.s.,sx	a.s.,dx
-11.013	-4.725	-11.013	-1.915	L2	L3	2.81	0.3	0.67	0.67	0.67			

Caratteristiche del materiale

(Circolare 7 21-01-19 C8.5.I) Muratura in mattoni pieni e malta di calce LC2_Corti

fb	fk	fvk0	fmedio	τ0	fv0	μ	ϕ	fv,lim	E	G	FC
600000			345000	9000	20000	0.58	0.77	32500	320000000	128000000	1.2

Verifica a pressoflessione nel piano secondo D.M. 17-01-18 NTC §7.8.2.2.1 in combinazioni non sismiche, γM = 3

Comb.	Quota	N	M	σ0	Mu	c.s.	Verifica
SLU 82	0	-52163	-3467.88	61877	17617.86	5.08	Si
SLU 82	0.67	-52812	-3688.72	62647	17135.88	4.645	Si
SLU 78	0	-51724	-3373.76	61356	17934.33	5.316	Si
SLU 78	0.67	-52353	-3591.07	62102	17478.72	4.867	Si
SLU 77	0	-51674	-3323.22	61297	17969.3	5.407	Si
SLU 77	0.67	-52287	-3519.1	62024	17526.99	4.981	Si
SLU 83	0	-52713	-3420.01	62529	17210.42	5.032	Si
SLU 83	0.67	-53366	-3614.77	63304	16710.52	4.623	Si
SLU 79	0	-51467	-3357.39	61052	18115.25	5.396	Si
SLU 79	0.67	-52074	-3556.37	61771	17682.66	4.972	Si
SLU 75	0	-51124	-3371.08	60645	18353.36	5.444	Si
SLU 75	0.67	-51733	-3593.05	61367	17927.87	4.99	Si
SLU 80	0	-51517	-3407.93	61110	18080.7	5.305	Si
SLU 80	0.67	-52139	-3628.34	61849	17634.97	4.86	Si
SLU 76	0	-50950	-3438.95	60438	18472.37	5.372	Si
SLU 76	0.67	-51563	-3678.29	61166	18047.93	4.907	Si
SLU 81	0	-52114	-3417.33	61818	17653.71	5.166	Si
SLU 81	0.67	-52746	-3616.74	62569	17185.38	4.752	Si
SLU 84	0	-52762	-3470.56	62588	17173.36	4.948	Si
SLU 84	0.67	-53432	-3686.74	63382	16659.36	4.519	Si

Verifica a pressoflessione nel piano secondo D.M. 17-01-18 NTC §7.8.2.2.1 in combinazioni sismiche, γM = 2

Comb.	Quota	N	M	σ0	Mu	c.s.	Verifica
SLV 11	0	-15251	7364.93	18091	18255.55	2.479	Si
SLV 11	0.67	-15286	2355.43	18132	18289.66	7.765	Si
SLV 8	0	-19281	7071.95	22872	22019.53	3.114	Si
SLV 8	0.67	-17917	4217.76	21254	20794.9	4.93	Si
SLV 9	0	-52333	-12090.18	62079	36171.68	2.992	Si
SLV 9	0.67	-54360	-9578.71	64483	36069.71	3.766	Si
SLV 12	0	-15251	7364.93	18091	18255.55	2.479	Si
SLV 12	0.67	-15286	2355.43	18132	18289.66	7.765	Si
SLV 5	0	-56363	-12383.16	66859	35858.85	2.896	Si
SLV 5	0.67	-56991	-7716.39	67605	35770.16	4.636	Si
SLV 7	0	-19281	7071.95	22872	22019.53	3.114	Si
SLV 7	0.67	-17917	4217.76	21254	20794.9	4.93	Si
SLV 14	0	-34653	-4939.08	41106	32308.36	6.541	Si
SLV 14	0.67	-37614	-7574.47	44619	33550.09	4.429	Si
SLV 10	0	-52333	-12090.18	62079	36171.68	2.992	Si
SLV 10	0.67	-54360	-9578.71	64483	36069.71	3.766	Si
SLV 13	0	-34653	-4939.08	41106	32308.36	6.541	Si
SLV 13	0.67	-37614	-7574.47	44619	33550.09	4.429	Si
SLV 6	0	-56363	-12383.16	66859	35858.85	2.896	Si
SLV 6	0.67	-56991	-7716.39	67605	35770.16	4.636	Si

Verifica a taglio nel piano secondo D.M. 17-01-18 (N.T.C.) §7.8.2.2.2 con rottura per scorrimento in combinazioni non sismiche, γM = 3

Comb.	Quota	N	V par	M	σ0	σN	l'	fvd	Vt scorr.	Vt fess.diag.	Vt,lim	c.s.	Verifica
SLU 80	0	-51517	-2121	-3407.93		61110	2.81	10833	9133			4.31	Si
SLU 80	0.67	-52139	-2121	-3628.34		61849	2.81	10833	9133			4.31	Si
SLU 78	0	-51724	-2136	-3373.76		61356	2.81	10833	9133			4.28	Si
SLU 78	0.67	-52353	-2135	-3591.07		62102	2.81	10833	9133			4.28	Si
SLU 75	0	-51124	-2098	-3371.08		60645	2.81	10833	9133			4.35	Si
SLU 75	0.67	-51733	-2098	-3593.05		61367	2.81	10833	9133			4.35	Si
SLU 81	0	-52114	-2109	-3417.33		61818	2.81	10833	9133			4.33	Si
SLU 81	0.67	-52746	-2097	-3616.74		62569	2.81	10833	9133			4.35	Si
SLU 76	0	-50950	-2100	-3438.95		60438	2.81	10833	9133			4.35	Si
SLU 76	0.67	-51563	-2103	-3678.29		61166	2.81	10833	9133			4.34	Si

Comb.	Quota	N	V par	M	σ0	σN	l'	fvd	Vt scorr.	Vt fess.diag.	Vt,lim	c.s.	Verifica
SLU 84	0	-52762	-2170	-3470.56		62588	2.81	10833	9133			4.21	Si
SLU 84	0.67	-53432	-2163	-3686.74		63382	2.81	10833	9133			4.22	Si
SLU 83	0	-52713	-2146	-3420.01		62529	2.81	10833	9133			4.25	Si
SLU 83	0.67	-53366	-2135	-3614.77		63304	2.81	10833	9133			4.28	Si
SLU 82	0	-52163	-2133	-3467.88		61877	2.81	10833	9133			4.28	Si
SLU 82	0.67	-52812	-2125	-3688.72		62647	2.81	10833	9133			4.3	Si
SLU 77	0	-51674	-2112	-3323.22		61297	2.81	10833	9133			4.32	Si
SLU 77	0.67	-52287	-2107	-3519.1		62024	2.81	10833	9133			4.33	Si
SLU 79	0	-51467	-2098	-3357.39		61052	2.81	10833	9133			4.35	Si
SLU 79	0.67	-52074	-2093	-3556.37		61771	2.81	10833	9133			4.36	Si

Verifica a taglio nel piano secondo D.M. 17-01-18 (N.T.C.) §7.8.2.2.2 con rottura per scorrimento in combinazioni sismiche, γM = 2

Comb.	Quota	N	V par	M	σ0	σN	l'	fvd	Vt scorr.	Vt fess.diag.	Vt,lim	c.s.	Verifica
SLV 6	0	-56363	-16367	-12383.16		66859	2.81	16250	13699			0.84	No, Vu<V
SLV 6	0.67	-56991	-16466	-7716.39		67605	2.81	16250	13699			0.83	No, Vu<V
SLV 8	0	-19281	13297	7071.95		22872	2.81	12908	10881			0.82	No, Vu<V
SLV 8	0.67	-17917	13768	4217.76		21254	2.81	12584	10608			0.77	No, Vu<V
SLV 13	0	-34653	-5521	-4939.08		41106	2.81	16250	13699			2.48	Si
SLV 13	0.67	-37614	-6252	-7574.47		44619	2.81	16250	13699			2.19	Si
SLV 5	0	-56363	-16367	-12383.16		66859	2.81	16250	13699			0.84	No, Vu<V
SLV 5	0.67	-56991	-16466	-7716.39		67605	2.81	16250	13699			0.83	No, Vu<V
SLV 9	0	-52333	-16153	-12090.18		62079	2.81	16250	13699			0.85	No, Vu<V
SLV 9	0.67	-54360	-16636	-9578.71		64483	2.81	16250	13699			0.82	No, Vu<V
SLV 11	0	-15251	13511	7364.93		18377	2.7663	12009	9966			0.74	No, Vu<V
SLV 11	0.67	-15286	13598	2355.43		18132	2.81	11960	10082			0.74	No, Vu<V
SLV 14	0	-34653	-5521	-4939.08		41106	2.81	16250	13699			2.48	Si
SLV 14	0.67	-37614	-6252	-7574.47		44619	2.81	16250	13699			2.19	Si
SLV 12	0	-15251	13511	7364.93		18377	2.7663	12009	9966			0.74	No, Vu<V
SLV 12	0.67	-15286	13598	2355.43		18132	2.81	11960	10082			0.74	No, Vu<V
SLV 7	0	-19281	13297	7071.95		22872	2.81	12908	10881			0.82	No, Vu<V
SLV 7	0.67	-17917	13768	4217.76		21254	2.81	12584	10608			0.77	No, Vu<V
SLV 10	0	-52333	-16153	-12090.18		62079	2.81	16250	13699			0.85	No, Vu<V
SLV 10	0.67	-54360	-16636	-9578.71		64483	2.81	16250	13699			0.82	No, Vu<V

Verifica a pressoflessione fuori piano D.M. 17-01-18 (N.T.C.)

quota 0.335 Wa 0.05 denominatore 8 γM = 2

Comb.	fd	Sa	σ0	N	M	Mc	Coeff.s.	Verifica
SLV 11	143750	0.25	19682	-16592	7.14	2087.9	292.51	Si
SLV 12	143750	0.25	19682	-16592	7.14	2087.9	292.51	Si
SLV 7	143750	0.25	23178	-19539	7.14	2374.9	332.72	Si
SLV 8	143750	0.25	23178	-19539	7.14	2374.9	332.72	Si
SLV 16	143750	0.25	31044	-26170	7.14	2928.17	410.23	Si
SLV 15	143750	0.25	31044	-26170	7.14	2928.17	410.23	Si
SLV 3	143750	0.25	42696	-35993	7.14	3512.42	492.08	Si
SLV 4	143750	0.25	42696	-35993	7.14	3512.42	492.08	Si
SLV 13	143750	0.25	44278	-37327	7.14	3570.06	500.16	Si
SLV 14	143750	0.25	44278	-37327	7.14	3570.06	500.16	Si

Verifica dei meccanismi locali di collasso con analisi cinematica lineare

forza di aggancio al piano = 0 quota mezzeria = 0.335 Wa = 0.05 Ta = 0.0025

Comb.	N top	N base	V orto	α0	M*	e*	a0*	aLim	Verifica
SLV 2	-46385	-48086	329	0.219	4806.2	0.995	3.20407	2.53248	Si
SLV 1	-46385	-48086	329	0.219	4806.2	0.995	3.20407	2.53248	Si
SLV 6	-56991	-56363	396	0.219	5887.4	0.996	3.19642	2.52374	Si
SLV 5	-56991	-56363	396	0.219	5887.4	0.996	3.19642	2.52374	Si
SLV 9	-54360	-52333	342	0.22	5619.1	0.995	3.20784	2.52374	Si
SLV 10	-54360	-52333	342	0.22	5619.1	0.995	3.20784	2.52374	Si
SLV 3	-34663	-36962	219	0.221	3611.3	0.993	3.23321	2.53248	Si
SLV 4	-34663	-36962	219	0.221	3611.3	0.993	3.23321	2.53248	Si
SLV 14	-37614	-34653	151	0.223	3912.2	0.993	3.2607	2.53248	Si
SLV 13	-37614	-34653	151	0.223	3912.2	0.993	3.2607	2.53248	Si

Tabella dei coefficienti di sicurezza minimi

Stato limite	Coeff.s.	Comb.	Verifica
PF_SLU	4.519	SLU 84	Si
V_SLU	4.209	SLU 84	Si
PF_SLV	2.479	SLV 11	Si
V_SLV	0.738	SLV 11	No
PFFP_SLV	292.512	SLV 11	Si
R_SLV	1.265	SLV 1	Si

Maschio 39

Verifiche condotte secondo D.M. 17-01-18 (N.T.C.)

Dati geometrici

X ini.	Y ini.	X fin.	Y fin.	Quota i.	Quota.s	l	Sp.	h netta	h ini.	h fin.	a	a.s.,sx	a.s.,dx
-11.013	-1.915	-11.013	-0.354	L1	Z medio 34 cm	1.561	0.3	2.365	2.03	2.7			

Caratteristiche del materiale

(Circolare 7 21-01-19 C8.5.I) Muratura in mattoni pieni e malta di calce LC2_Corti

fb	fk	fvk0	fmedio	τ0	fv0	μ	ϕ	fv,lim	E	G	FC
600000			345000	9000	20000	0.58	0.77	32500	320000000	128000000	1.2

Verifica a pressoflessione nel piano secondo D.M. 17-01-18 NTC §7.8.2.2.1 in combinazioni non sismiche, γM = 3

Comb.	Quota	N	M	σ0	Mu	c.s.	Verifica
SLU 39	-2.03	-24196	80.98	51656	6911.1	85.341	Si
SLU 39	0	-23543	49.01	50262	7039.14	143.632	Si
SLU 81	-2.03	-28845	63.9	61581	5495.18	85.99	Si
SLU 81	0	-27893	36.5	59547	5857.48	160.459	Si
SLU 42	-2.03	-24447	78.46	52192	6857.26	87.404	Si
SLU 42	0	-23833	50.04	50881	6984.47	139.588	Si
SLU 41	-2.03	-24537	85	52383	6837.37	80.44	Si
SLU 41	0	-23915	57.16	51056	6968.34	121.917	Si
SLU 35	-2.03	-23900	80.5	51023	6971.36	86.604	Si
SLU 35	0	-23279	73.19	49698	7086	96.818	Si
SLU 83	-2.03	-29186	67.92	62308	5356.64	78.864	Si
SLU 83	0	-28265	44.65	60341	5720.48	128.11	Si
SLU 32	-2.03	-23560	76.48	50296	7036.21	92.001	Si
SLU 32	0	-22907	65.04	48904	7147.12	109.887	Si
SLU 84	-2.03	-29096	61.38	62117	5393.6	87.876	Si
SLU 84	0	-28182	37.53	60165	5751.25	153.233	Si
SLU 77	-2.03	-28549	63.42	60948	5611.81	88.487	Si
SLU 77	0	-27628	60.69	58982	5951.38	98.07	Si
SLU 40	-2.03	-24107	74.44	51464	6929.73	93.095	Si
SLU 40	0	-23461	41.89	50086	7054.03	168.403	Si

Verifica a pressoflessione nel piano secondo D.M. 17-01-18 NTC §7.8.2.2.1 in combinazioni sismiche, γM = 2

Comb.	Quota	N	M	σ0	Mu	c.s.	Verifica
SLV 11	-2.03	-18711	2365.56	39945	9831.98	4.156	Si
SLV 11	0	-19893	295.22	42470	10132.57	34.322	Si
SLV 8	-2.03	-22237	2507.95	47472	10615.36	4.233	Si
SLV 8	0	-23231	573.68	49594	10774.89	18.782	Si
SLV 13	-2.03	-13341	-952.2	28481	7987.53	8.388	Si
SLV 13	0	-12239	-571.26	26129	7511.89	13.15	Si
SLV 12	-2.03	-18711	2365.56	39945	9831.98	4.156	Si
SLV 12	0	-19893	295.22	42470	10132.57	34.322	Si
SLV 14	-2.03	-13341	-952.2	28481	7987.53	8.388	Si
SLV 14	0	-12239	-571.26	26129	7511.89	13.15	Si
SLV 6	-2.03	-20305	-2340.72	43348	10228.18	4.37	Si
SLV 6	0	-17445	-259.55	37244	9468.22	36.48	Si
SLV 10	-2.03	-16779	-2483.11	35820	9258.98	3.729	Si
SLV 10	0	-14108	-538.01	30119	8299.17	15.426	Si
SLV 9	-2.03	-16779	-2483.11	35820	9258.98	3.729	Si
SLV 9	0	-14108	-538.01	30119	8299.17	15.426	Si
SLV 7	-2.03	-22237	2507.95	47472	10615.36	4.233	Si
SLV 7	0	-23231	573.68	49594	10774.89	18.782	Si
SLV 5	-2.03	-20305	-2340.72	43348	10228.18	4.37	Si
SLV 5	0	-17445	-259.55	37244	9468.22	36.48	Si

Verifica a taglio nel piano secondo D.M. 17-01-18 (N.T.C.) §7.8.2.2.2 con rottura per scorrimento in combinazioni non sismiche, γM = 3

Comb.	Quota	N	V par	M	σ0	σN	I'	fvd	Vt scorr.	Vt fess.diag.	Vt,lim	c.s.	Verifica
SLU 79	-2.03	-28377	1926	57.42		60581	1.5614	10833	5075			2.63	Si
SLU 79	0	-27442	1188	52.2		58584	1.5614	10833	5075			4.27	Si
SLU 75	-2.03	-28119	1908	52.86		60030	1.5614	10833	5075			2.66	Si
SLU 75	0	-27174	1182	45.42		58013	1.5614	10833	5075			4.29	Si
SLU 74	-2.03	-28209	1909	59.4		60221	1.5614	10833	5075			2.66	Si
SLU 74	0	-27256	1181	52.54		58188	1.5614	10833	5075			4.3	Si
SLU 82	-2.03	-28756	1950	57.36		61389	1.5614	10833	5075			2.6	Si
SLU 82	0	-27810	1234	29.38		59371	1.5614	10833	5075			4.11	Si
SLU 83	-2.03	-29186	1974	67.92		62308	1.5614	10833	5075			2.57	Si
SLU 83	0	-28265	1243	44.65		60341	1.5614	10833	5075			4.08	Si
SLU 78	-2.03	-28459	1931	56.87		60757	1.5614	10833	5075			2.63	Si
SLU 78	0	-27546	1193	53.56		58807	1.5614	10833	5075			4.25	Si
SLU 80	-2.03	-28287	1925	50.87		60389	1.5614	10833	5075			2.64	Si
SLU 80	0	-27360	1189	45.07		58409	1.5614	10833	5075			4.27	Si
SLU 81	-2.03	-28845	1951	63.9		61581	1.5614	10833	5075			2.6	Si
SLU 81	0	-27893	1233	36.5		59547	1.5614	10833	5075			4.12	Si
SLU 84	-2.03	-29096	1973	61.38		62117	1.5614	10833	5075			2.57	Si
SLU 84	0	-28182	1245	37.53		60165	1.5614	10833	5075			4.08	Si
SLU 77	-2.03	-28549	1932	63.42		60948	1.5614	10833	5075			2.63	Si
SLU 77	0	-27628	1191	60.69		58982	1.5614	10833	5075			4.26	Si

Verifica a taglio nel piano secondo D.M. 17-01-18 (N.T.C.) §7.8.2.2.2 con rottura per scorrimento in combinazioni sismiche, γM = 2

Comb.	Quota	N	V par	M	σ0	σN	I'	fvd	Vt scorr.	Vt fess.diag.	Vt,lim	c.s.	Verifica
SLV 10	-2.03	-16779	-6632	-2483.11		35820	1.5614	15497	7259			1.09	Si
SLV 10	0	-14108	-7432	-538.01		30119	1.5614	14357	6725			0.9	No, Vu<V
SLV 8	-2.03	-22237	9307	2507.95		47472	1.5614	16250	7612			0.82	No, Vu<V
SLV 8	0	-23231	9031	573.68		49594	1.5614	16250	7612			0.84	No, Vu<V
SLV 16	-2.03	-13921	3965	502.4		29719	1.5614	14277	6688			1.69	Si
SLV 16	0	-13975	3897	-321.29		29835	1.5614	14300	6698			1.72	Si
SLV 6	-2.03	-20305	-6763	-2340.72		43348	1.5614	16250	7612			1.13	Si
SLV 6	0	-17445	-7778	-259.55		37244	1.5614	15782	7393			0.95	No, Vu<V
SLV 15	-2.03	-13921	3965	502.4		29719	1.5614	14277	6688			1.69	Si
SLV 15	0	-13975	3897	-321.29		29835	1.5614	14300	6698			1.72	Si
SLV 5	-2.03	-20305	-6763	-2340.72		43348	1.5614	16250	7612			1.13	Si
SLV 5	0	-17445	-7778	-259.55		37244	1.5614	15782	7393			0.95	No, Vu<V
SLV 12	-2.03	-18711	9437	2365.56		39945	1.5614	16250	7612			0.81	No, Vu<V
SLV 12	0	-19893	9377	295.22		42470	1.5614	16250	7612			0.81	No, Vu<V
SLV 11	-2.03	-18711	9437	2365.56		39945	1.5614	16250	7612			0.81	No, Vu<V
SLV 11	0	-19893	9377	295.22		42470	1.5614	16250	7612			0.81	No, Vu<V
SLV 7	-2.03	-22237	9307	2507.95		47472	1.5614	16250	7612			0.82	No, Vu<V
SLV 7	0	-23231	9031	573.68		49594	1.5614	16250	7612			0.84	No, Vu<V
SLV 9	-2.03	-16779	-6632	-2483.11		35820	1.5614	15497	7259			1.09	Si
SLV 9	0	-14108	-7432	-538.01		30119	1.5614	14357	6725			0.9	No, Vu<V

Verifica a pressoflessione fuori piano D.M. 17-01-18 (N.T.C.)

quota -1.015 Wa 0.05 denominatore 8 γM = 2

Comb.	fd	Sa	σ0	N	M	Mc	Coeff.s.	Verifica
SLV 14	143750	0.24	27981	-13107	48.01	1515.81	31.57	Si
SLV 13	143750	0.24	27981	-13107	48.01	1515.81	31.57	Si
SLV 16	143750	0.24	29322	-13735	48.01	1565.83	32.62	Si
SLV 15	143750	0.24	29322	-13735	48.01	1565.83	32.62	Si
SLV 10	143750	0.24	35355	-16561	48.01	1765.33	36.77	Si
SLV 9	143750	0.24	35355	-16561	48.01	1765.33	36.77	Si
SLV 12	143750	0.24	39824	-18654	48.01	1886.15	39.29	Si
SLV 11	143750	0.24	39824	-18654	48.01	1886.15	39.29	Si
SLV 5	143750	0.24	43016	-20149	48.01	1958.36	40.79	Si
SLV 6	143750	0.24	43016	-20149	48.01	1958.36	40.79	Si

Verifica dei meccanismi locali di collasso con analisi cinematica lineare

forza di aggancio al piano = 0 quota mezzeria = -1.015 Wa = 0.05 Ta = 0.0311

Comb.	N top	N base	V orto	α0	M*	e*	a0*	aLim	Verifica
SLV 3	-25100	-25675	84	0.063	2712	0.982	0.92719	3.6414	No
SLV 4	-25100	-25675	84	0.063	2712	0.982	0.92719	3.6414	No
SLV 1	-23364	-25095	77	0.063	2535.2	0.981	0.93129	3.6414	No
SLV 2	-23364	-25095	77	0.063	2535.2	0.981	0.93129	3.6414	No
SLV 16	-13975	-13921	-21	0.066	1578.8	0.97	0.99272	3.6414	No
SLV 15	-13975	-13921	-21	0.066	1578.8	0.97	0.99272	3.6414	No
SLV 7	-23231	-22237	54	0.064	2521.6	0.981	0.94548	3.46595	No
SLV 8	-23231	-22237	54	0.064	2521.6	0.981	0.94548	3.46595	No
SLV 14	-12239	-13341	-27	0.066	1402.1	0.966	0.99483	3.6414	No
SLV 13	-12239	-13341	-27	0.066	1402.1	0.966	0.99483	3.6414	No

Tabella dei coefficienti di sicurezza minimi

Stato limite	Coeff.s.	Comb.	Verifica
PF_SLU	78.864	SLU 83	Si
V_SLU	2.57	SLU 83	Si
PF_SLV	3.729	SLV 9	Si
V_SLV	0.807	SLV 11	No
PFFP_SLV	31.575	SLV 13	Si
R_SLV	0.255	SLV 3	No

Maschio 41

Verifiche condotte secondo D.M. 17-01-18 (N.T.C.)

Dati geometrici

X ini.	Y ini.	X fin.	Y fin.	Quota i.	Quota.s	l	Sp.	h netta	h ini.	h fin.	a	a.s.,sx	a.s.,dx
-11.013	-0.354	-11.013	1.046	L1	L3	1.4	0.3	2.7	2.7	2.7			

Caratteristiche del materiale

(Circolare 7 21-01-19 C8.5.I) Muratura in mattoni pieni e malta di calce LC2_Corti

fb	fk	fvk0	fmedio	τ0	fv0	μ	ϕ	fv,lim	E	G	FC
600000			345000	9000	20000	0.58	0.77	32500	320000000	128000000	1.2

Verifica a pressoflessione nel piano secondo D.M. 17-01-18 NTC §7.8.2.2.1 in combinazioni non sismiche, γM = 3

Comb.	Quota	N	M	σ0	Mu	c.s.	Verifica
SLU 80	-2.03	-24954	953.45	59415	4727.01	4.958	Si
SLU 80	0.67	-23285	-491.97	55440	5206.17	10.582	Si
SLU 74	-2.03	-24985	964.5	59488	4717.14	4.891	Si
SLU 74	0.67	-23261	-480.01	55383	5212.19	10.859	Si
SLU 79	-2.03	-25097	965.16	59754	4680.87	4.85	Si
SLU 79	0.67	-23419	-485.58	55759	5171.93	10.651	Si
SLU 75	-2.03	-24843	952.79	59149	4762.63	4.999	Si
SLU 75	0.67	-23127	-486.4	55064	5245.57	10.785	Si
SLU 83	-2.03	-25920	1008.65	61713	4398.01	4.36	Si
SLU 83	0.67	-24170	-495.37	57548	4966.25	10.025	Si
SLU 84	-2.03	-25777	996.94	61374	4448.95	4.463	Si
SLU 84	0.67	-24036	-501.75	57229	5004.61	9.974	Si
SLU 82	-2.03	-25477	986.17	60659	4553.62	4.617	Si
SLU 82	0.67	-23667	-497.18	56350	5106.56	10.271	Si
SLU 81	-2.03	-25619	997.88	60998	4504.43	4.514	Si
SLU 81	0.67	-23801	-490.8	56669	5070.23	10.331	Si
SLU 78	-2.03	-25143	963.56	59864	4665.74	4.842	Si
SLU 78	0.67	-23496	-490.97	55943	5151.78	10.493	Si
SLU 77	-2.03	-25285	975.27	60203	4618.5	4.736	Si
SLU 77	0.67	-23630	-484.58	56262	5116.38	10.558	Si

Verifica a pressoflessione nel piano secondo D.M. 17-01-18 NTC §7.8.2.2.1 in combinazioni sismiche, γM = 2

Comb.	Quota	N	M	σ0	Mu	c.s.	Verifica
SLV 4	-2.03	-29453	2239.38	70126	8784.54	3.923	Si
SLV 4	0.67	-25746	-36.97	61300	8980.74	242.919	Si
SLV 10	-2.03	-5977	-2049.16	14232	3696.78	1.804	Si
SLV 10	0.67	-6197	-553.36	14756	3814.29	6.893	Si
SLV 3	-2.03	-29453	2239.38	70126	8784.54	3.923	Si
SLV 3	0.67	-25746	-36.97	61300	8980.74	242.919	Si
SLV 8	-2.03	-28164	3327.4	67056	8895.31	2.673	Si
SLV 8	0.67	-25135	-143.85	59844	8977.09	62.405	Si
SLV 9	-2.03	-5977	-2049.16	14232	3696.78	1.804	Si
SLV 9	0.67	-6197	-553.36	14756	3814.29	6.893	Si
SLV 11	-2.03	-22193	2804.03	52841	8816.97	3.144	Si
SLV 11	0.67	-20362	-308.83	48480	8598	27.841	Si

Comb.	Quota	N	M	σ0	Mu	c.s.	Verifica
SLV 12	-2.03	-22193	2804.03	52841	8816.97	3.144	Si
SLV 12	0.67	-20362	-308.83	48480	8598	27.841	Si
SLV 7	-2.03	-28164	3327.4	67056	8895.31	2.673	Si
SLV 7	0.67	-25135	-143.85	59844	8977.09	62.405	Si
SLV 14	-2.03	-4688	-961.14	11161	2981.71	3.102	Si
SLV 14	0.67	-5586	-660.25	13300	3484.69	5.278	Si
SLV 13	-2.03	-4688	-961.14	11161	2981.71	3.102	Si
SLV 13	0.67	-5586	-660.25	13300	3484.69	5.278	Si

Verifica a taglio nel piano secondo D.M. 17-01-18 (N.T.C.) §7.8.2.2.2 con rottura per scorrimento in combinazioni non sismiche, γM = 3

Comb.	Quota	N	V par	M	σ0	σN	l'	fvd	Vt scorr.	Vt fess.diag.	Vt,lim	c.s.	Verifica
SLU 80	-2.03	-24954	4237	953.45		59415	1.4	10833	4550			1.07	Si
SLU 80	0.67	-23285	1040	-491.97		55440	1.4	10833	4550			4.38	Si
SLU 83	-2.03	-25920	4348	1008.65		61713	1.4	10833	4550			1.05	Si
SLU 83	0.67	-24170	1028	-495.37		57548	1.4	10833	4550			4.42	Si
SLU 75	-2.03	-24843	4201	952.79		59149	1.4	10833	4550			1.08	Si
SLU 75	0.67	-23127	1017	-486.4		55064	1.4	10833	4550			4.48	Si
SLU 77	-2.03	-25285	4272	975.27		60203	1.4	10833	4550			1.06	Si
SLU 77	0.67	-23630	1050	-484.58		56262	1.4	10833	4550			4.33	Si
SLU 81	-2.03	-25619	4283	997.88		60998	1.4	10833	4550			1.06	Si
SLU 81	0.67	-23801	991	-490.8		56669	1.4	10833	4550			4.59	Si
SLU 84	-2.03	-25777	4341	996.94		61374	1.4	10833	4550			1.05	Si
SLU 84	0.67	-24036	1032	-501.75		57229	1.4	10833	4550			4.41	Si
SLU 74	-2.03	-24985	4207	964.5		59488	1.4	10833	4550			1.08	Si
SLU 74	0.67	-23261	1013	-480.01		55383	1.4	10833	4550			4.49	Si
SLU 79	-2.03	-25097	4243	965.16		59754	1.4	10833	4550			1.07	Si
SLU 79	0.67	-23419	1036	-485.58		55759	1.4	10833	4550			4.39	Si
SLU 82	-2.03	-25477	4276	986.17		60659	1.4	10833	4550			1.06	Si
SLU 82	0.67	-23667	995	-497.18		56350	1.4	10833	4550			4.57	Si
SLU 78	-2.03	-25143	4266	963.56		59864	1.4	10833	4550			1.07	Si
SLU 78	0.67	-23496	1054	-490.97		55943	1.4	10833	4550			4.32	Si

Verifica a taglio nel piano secondo D.M. 17-01-18 (N.T.C.) §7.8.2.2.2 con rottura per scorrimento in combinazioni sismiche, γM = 2

Comb.	Quota	N	V par	M	σ0	σN	l'	fvd	Vt scorr.	Vt fess.diag.	Vt,lim	c.s.	Verifica
SLV 6	-2.03	-11947	-4331	-1525.8		28446	1.4	14023	5889			1.36	Si
SLV 6	0.67	-10971	-7087	-388.39		26120	1.4	13557	5694			0.8	No, Vu<V
SLV 11	-2.03	-22193	10129	2804.03		52841	1.4	16250	6825			0.67	No, Vu<V
SLV 11	0.67	-20362	8473	-308.83		48480	1.4	16250	6825			0.81	No, Vu<V
SLV 10	-2.03	-5977	-4241	-2049.16		18594	1.0715	12052	3874			0.91	No, Vu<V
SLV 10	0.67	-6197	-4683	-553.36		14756	1.4	11284	4739			1.01	Si
SLV 9	-2.03	-5977	-4241	-2049.16		18594	1.0715	12052	3874			0.91	No, Vu<V
SLV 9	0.67	-6197	-4683	-553.36		14756	1.4	11284	4739			1.01	Si
SLV 5	-2.03	-11947	-4331	-1525.8		28446	1.4	14023	5889			1.36	Si
SLV 5	0.67	-10971	-7087	-388.39		26120	1.4	13557	5694			0.8	No, Vu<V
SLV 16	-2.03	-9553	5205	494.82		22744	1.4	12882	5411			1.04	Si
SLV 16	0.67	-9835	6673	-586.88		23418	1.4	13017	5467			0.82	No, Vu<V
SLV 8	-2.03	-28164	10038	3327.4		67056	1.4	16250	6825			0.68	No, Vu<V
SLV 8	0.67	-25135	6069	-143.85		59844	1.4	16250	6825			1.12	Si
SLV 7	-2.03	-28164	10038	3327.4		67056	1.4	16250	6825			0.68	No, Vu<V
SLV 7	0.67	-25135	6069	-143.85		59844	1.4	16250	6825			1.12	Si
SLV 12	-2.03	-22193	10129	2804.03		52841	1.4	16250	6825			0.67	No, Vu<V
SLV 12	0.67	-20362	8473	-308.83		48480	1.4	16250	6825			0.81	No, Vu<V
SLV 15	-2.03	-9553	5205	494.82		22744	1.4	12882	5411			1.04	Si
SLV 15	0.67	-9835	6673	-586.88		23418	1.4	13017	5467			0.82	No, Vu<V

Verifica a pressoflessione fuori piano D.M. 17-01-18 (N.T.C.)

quota -0.68 Wa 0.05 denominatore 8 γM = 2

Comb.	fd	Sa	σ0	N	M	Mc	Coeff.s.	Verifica
SLV 13	143750	0.24	12270	-5154	56.1	695.41	12.4	Si
SLV 14	143750	0.24	12270	-5154	56.1	695.41	12.4	Si
SLV 10	143750	0.24	13216	-5551	56.1	742.56	13.24	Si
SLV 9	143750	0.24	13216	-5551	56.1	742.56	13.24	Si
SLV 15	143750	0.24	23810	-10000	56.1	1207.75	21.53	Si
SLV 16	143750	0.24	23810	-10000	56.1	1207.75	21.53	Si
SLV 6	143750	0.24	25567	-10738	56.1	1273.68	22.7	Si
SLV 5	143750	0.24	25567	-10738	56.1	1273.68	22.7	Si
SLV 12	143750	0.24	51683	-21707	56.1	1878.79	33.49	Si
SLV 11	143750	0.24	51683	-21707	56.1	1878.79	33.49	Si

Verifica dei meccanismi locali di collasso con analisi cinematica lineare

forza di aggancio al piano = 0 quota mezzeria = -0.68 Wa = 0.05 Ta = 0.0406

Comb.	N top	N base	V orto	α0	M*	e*	a0*	aLim	Verifica
SLV 4	-25746	-29453	258	0.048	2781.5	0.982	0.7108	4.36108	No
SLV 3	-25746	-29453	258	0.048	2781.5	0.982	0.7108	4.36108	No
SLV 8	-25135	-28164	278	0.047	2719.2	0.982	0.69705	4.07946	No
SLV 7	-25135	-28164	278	0.047	2719.2	0.982	0.69705	4.07946	No
SLV 1	-21497	-24588	170	0.051	2348.6	0.979	0.75021	4.36108	No
SLV 2	-21497	-24588	170	0.051	2348.6	0.979	0.75021	4.36108	No
SLV 11	-20362	-22193	207	0.049	2232.9	0.978	0.72099	4.07946	No
SLV 12	-20362	-22193	207	0.049	2232.9	0.978	0.72099	4.07946	No
SLV 14	-5586	-4688	-67	0.054	729.8	0.939	0.83686	4.36108	No
SLV 13	-5586	-4688	-67	0.054	729.8	0.939	0.83686	4.36108	No

Tabella dei coefficienti di sicurezza minimi

Stato limite	Coeff.s.	Comb.	Verifica
PF_SLU	4.36	SLU 83	Si
V_SLU	1.047	SLU 83	Si
PF_SLV	1.804	SLV 9	Si
V_SLV	0.674	SLV 11	No

Stato limite	Coeff.s.	Comb.	Verifica
PFFP_SLV	12.395	SLV 13	Si
R_SLV	0.163	SLV 3	No

Maschio 42

Verifiche condotte secondo D.M. 17-01-18 (N.T.C.)

Dati geometrici

X ini.	Y ini.	X fin.	Y fin.	Quota i.	Quota.s	l	Sp.	h netta	h ini.	h fin.	a	a.s.,sx	a.s.,dx
-9.728	2.201	-9.728	6.258	L1	L3	4.057	0.3	2.7	2.7	2.7			

Caratteristiche del materiale

(Circolare 7 21-01-19 C8.5.I) Muratura in mattoni pieni e malta di calce LC2_Corti

fb	fk	fvk0	fmedio	τ0	fv0	μ	ϕ	fv,lim	E	G	FC
600000			345000	9000	20000	0.58	0.77	32500	320000000	128000000	1.2

Verifica a pressoflessione nel piano secondo D.M. 17-01-18 NTC §7.8.2.2.1 in combinazioni non sismiche, γM = 3

Comb.	Quota	N	M	σ0	Mu	c.s.	Verifica
SLU 73	-2.03	-47889	-634.68	39349	50215.1	79.119	Si
SLU 73	0.17	-41218	-816.06	33868	48846	59.856	Si
SLU 81	-2.03	-49916	-850.01	41015	50270.36	59.141	Si
SLU 81	0.17	-43158	-1022.64	35461	49431.86	48.337	Si
SLU 33	-2.03	-40904	-710.81	33610	48736.67	68.565	Si
SLU 33	0.17	-35696	-843.71	29330	46335.13	54.918	Si
SLU 42	-2.03	-42479	-795.49	34904	49244.34	61.904	Si
SLU 42	0.17	-37167	-912.67	30539	47125.67	51.635	Si
SLU 32	-2.03	-40909	-735.65	33614	48738.45	66.252	Si
SLU 32	0.17	-35699	-864.74	29332	46336.55	53.584	Si
SLU 31	-2.03	-40265	-848	33084	48501.67	57.195	Si
SLU 31	0.17	-35049	-993.93	28798	45959.06	46.24	Si
SLU 39	-2.03	-42292	-1063.34	34750	49189.38	46.26	Si
SLU 39	0.17	-36989	-1200.52	30392	47034.61	39.179	Si
SLU 41	-2.03	-42484	-820.34	34908	49245.8	60.031	Si
SLU 41	0.17	-37169	-933.7	30541	47126.93	50.473	Si
SLU 40	-2.03	-42287	-1038.49	34746	49187.88	47.365	Si
SLU 40	0.17	-36986	-1179.49	30390	47033.33	39.876	Si
SLU 82	-2.03	-49911	-825.17	41010	50270.43	60.921	Si
SLU 82	0.17	-43155	-1001.61	35459	49431.21	49.352	Si

Verifica a pressoflessione nel piano secondo D.M. 17-01-18 NTC §7.8.2.2.1 in combinazioni sismiche, γM = 2

Comb.	Quota	N	M	σ0	Mu	c.s.	Verifica
SLV 8	-2.03	-9031	41192.39	0	0	0	No, e>l/2
SLV 8	0.17	-4846	28044.06	0	0	0	No, e>l/2
SLV 11	-2.03	-19123	34323.02	15713	33801.4	0.985	No, M>Mu
SLV 11	0.17	-14596	22452.06	11993	26700.68	1.189	Si
SLV 9	-2.03	-58021	-41594.99	47674	71770.61	1.725	Si
SLV 9	0.17	-52160	-28715.79	42858	68690.86	2.392	Si
SLV 10	-2.03	-58021	-41594.99	47674	71770.61	1.725	Si
SLV 10	0.17	-52160	-28715.79	42858	68690.86	2.392	Si
SLV 12	-2.03	-19123	34323.02	15713	33801.4	0.985	No, M>Mu
SLV 12	0.17	-14596	22452.06	11993	26700.68	1.189	Si
SLV 7	-2.03	-9031	41192.39	0	0	0	No, e>l/2
SLV 7	0.17	-4846	28044.06	0	0	0	No, e>l/2
SLV 5	-2.03	-47928	-34725.63	39381	65884.44	1.897	Si
SLV 5	0.17	-42410	-23123.8	34847	61490.85	2.659	Si
SLV 4	-2.03	-10871	22635.34	0	0	0	No, e>l/2
SLV 4	0.17	-6618	16659.31	0	0	0	No, e>l/2
SLV 6	-2.03	-47928	-34725.63	39381	65884.44	1.897	Si
SLV 6	0.17	-42410	-23123.8	34847	61490.85	2.659	Si
SLV 3	-2.03	-10871	22635.34	0	0	0	No, e>l/2
SLV 3	0.17	-6618	16659.31	0	0	0	No, e>l/2

Verifica a taglio nel piano secondo D.M. 17-01-18 (N.T.C.) §7.8.2.2.2 con rottura per scorrimento in combinazioni non sismiche, γM = 3

Comb.	Quota	N	V par	M	σ0	σN	l'	fvd	Vt scorr.	Vt fess.diag.	Vt,lim	c.s.	Verifica
SLU 81	-2.03	-49916	452	-850.01		41015	4.0568	10833	13185			29.19	Si
SLU 81	0.17	-43158	1063	-1022.64		35461	4.0568	10284	12516			11.78	Si
SLU 83	-2.03	-50108	437	-607.01		41172	4.0568	10833	13185			30.17	Si
SLU 83	0.17	-43339	1049	-755.82		35610	4.0568	10304	12540			11.96	Si
SLU 82	-2.03	-49911	451	-825.17		41010	4.0568	10833	13185			29.21	Si
SLU 82	0.17	-43155	1069	-1001.61		35459	4.0568	10283	12515			11.71	Si
SLU 78	-2.03	-48720	407	-254.49		40032	4.0568	10833	13185			32.38	Si
SLU 78	0.17	-42046	1013	-399.02		34548	4.0568	10162	12367			12.21	Si
SLU 73	-2.03	-47889	428	-634.68		39349	4.0568	10802	13147			30.72	Si
SLU 73	0.17	-41218	1029	-816.06		33868	4.0568	10071	12257			11.91	Si
SLU 77	-2.03	-48725	407	-279.33		40036	4.0568	10833	13185			32.36	Si
SLU 77	0.17	-42049	1007	-420.05		34550	4.0568	10162	12368			12.28	Si
SLU 75	-2.03	-48528	422	-497.48		39874	4.0568	10833	13185			31.26	Si
SLU 75	0.17	-41866	1027	-665.84		34399	4.0568	10142	12343			12.01	Si
SLU 76	-2.03	-48081	413	-391.68		39507	4.0568	10823	13172			31.87	Si
SLU 76	0.17	-41399	1015	-549.24		34016	4.0568	10091	12281			12.1	Si
SLU 74	-2.03	-48533	422	-522.33		39878	4.0568	10833	13185			31.24	Si
SLU 74	0.17	-41868	1021	-686.87		34402	4.0568	10142	12344			12.09	Si
SLU 84	-2.03	-50103	437	-582.17		41168	4.0568	10833	13185			30.19	Si
SLU 84	0.17	-43336	1055	-734.79		35608	4.0568	10303	12539			11.89	Si

Verifica a taglio nel piano secondo D.M. 17-01-18 (N.T.C.) §7.8.2.2.2 con rottura per scorrimento in combinazioni sismiche, γM = 2

Comb.	Quota	N	V par	M	σ0	σN	l'	fvd	Vt scorr.	Vt fess.diag.	Vt,lim	c.s.	Verifica
SLV 3	-2.03	-10871	5191	22635.34		0	0	8333	0			0	No, Vu<V
SLV 3	0.17	-6618	2475	16659.31		0	0	8333	0			0	No, Vu<V
SLV 7	-2.03	-9031	17005	41192.39		0	0	8333	0			0	No, Vu<V
SLV 7	0.17	-4846	15138	28044.06		0	0	8333	0			0	No, Vu<V
SLV 5	-2.03	-47928	-16496	-34725.63		40843	3.9116	16250	19069			1.16	Si
SLV 5	0.17	-42410	-15409	-23123.8		34847	4.0568	15303	18624			1.21	Si
SLV 10	-2.03	-58021	-16420	-41594.99		49156	3.9345	16250	19181			1.17	Si
SLV 10	0.17	-52160	-13719	-28715.79		42858	4.0568	16250	19777			1.44	Si
SLV 12	-2.03	-19123	17081	34323.02		90971	0.7007	16250	3416			0.2	No, Vu<V
SLV 12	0.17	-14596	16828	22452.06		33086	1.4705	14951	6596			0.39	No, Vu<V
SLV 9	-2.03	-58021	-16420	-41594.99		49156	3.9345	16250	19181			1.17	Si
SLV 9	0.17	-52160	-13719	-28715.79		42858	4.0568	16250	19777			1.44	Si
SLV 11	-2.03	-19123	17081	34323.02		90971	0.7007	16250	3416			0.2	No, Vu<V
SLV 11	0.17	-14596	16828	22452.06		33086	1.4705	14951	6596			0.39	No, Vu<V
SLV 4	-2.03	-10871	5191	22635.34		0	0	8333	0			0	No, Vu<V
SLV 4	0.17	-6618	2475	16659.31		0	0	8333	0			0	No, Vu<V
SLV 6	-2.03	-47928	-16496	-34725.63		40843	3.9116	16250	19069			1.16	Si
SLV 6	0.17	-42410	-15409	-23123.8		34847	4.0568	15303	18624			1.21	Si
SLV 8	-2.03	-9031	17005	41192.39		0	0	8333	0			0	No, Vu<V
SLV 8	0.17	-4846	15138	28044.06		0	0	8333	0			0	No, Vu<V

Verifica a pressoflessione fuori piano D.M. 17-01-18 (N.T.C.)

quota -0.68 Wa 0.05 denominatore 8 γM = 2

Comb.	fd	Sa	σ0	N	M	Mc	Coeff.s.	Verifica
SLV 8	143750	0.24	6180	-7521	162.57	1071.08	6.59	Si
SLV 7	143750	0.24	6180	-7521	162.57	1071.08	6.59	Si
SLV 3	143750	0.24	7518	-9150	162.57	1288.02	7.92	Si
SLV 4	143750	0.24	7518	-9150	162.57	1288.02	7.92	Si
SLV 12	143750	0.24	14044	-17092	162.57	2269.1	13.96	Si
SLV 11	143750	0.24	14044	-17092	162.57	2269.1	13.96	Si
SLV 2	143750	0.24	16529	-20117	162.57	2609.32	16.05	Si
SLV 1	143750	0.24	16529	-20117	162.57	2609.32	16.05	Si
SLV 16	143750	0.24	33732	-41053	162.57	4457.93	27.42	Si
SLV 15	143750	0.24	33732	-41053	162.57	4457.93	27.42	Si

Verifica dei meccanismi locali di collasso con analisi cinematica lineare

forza di aggancio al piano = 0 quota mezzeria = -0.68 Wa = 0.05 Ta = 0.0406

Comb.	N top	N base	V orto	α0	M*	e*	a0*	aLim	Verifica
SLV 15	-36926	-44512	-814	0.039	4222.1	0.967	0.59014	4.36108	No
SLV 16	-36926	-44512	-814	0.039	4222.1	0.967	0.59014	4.36108	No
SLV 13	-48229	-56181	-933	0.041	5373	0.974	0.60506	4.36108	No
SLV 14	-48229	-56181	-933	0.041	5373	0.974	0.60506	4.36108	No
SLV 3	-4466	-10871	268	0.042	945	0.893	0.67617	4.36108	No
SLV 4	-4466	-10871	268	0.042	945	0.893	0.67617	4.36108	No
SLV 10	-50056	-58021	-694	0.046	5559.1	0.974	0.67976	4.07946	No
SLV 9	-50056	-58021	-694	0.046	5559.1	0.974	0.67976	4.07946	No
SLV 11	-12377	-19123	-296	0.047	1730	0.928	0.73535	4.07946	No
SLV 12	-12377	-19123	-296	0.047	1730	0.928	0.73535	4.07946	No

Tabella dei coefficienti di sicurezza minimi

Stato limite	Coeff.s.	Comb.	Verifica
PF_SLU	39.179	SLU 39	Si
V_SLU	11.707	SLU 82	Si
PF_SLV	0	SLV 3	No
V_SLV	0	SLV 3	No
PFFP_SLV	6.588	SLV 7	Si
R_SLV	0.135	SLV 15	No

Maschio 43

Verifiche condotte secondo D.M. 17-01-18 (N.T.C.)

Dati geometrici

X ini.	Y ini.	X fin.	Y fin.	Quota i.	Quota.s	l	Sp.	h netta	h ini.	h fin.	a	a.s.,sx	a.s.,dx
-7.844	-4.725	-11.013	-4.725	L1	L3	3.168	0.45	2.7	2.7	2.7			

Caratteristiche del materiale

(Circolare 7 21-01-19 C8.5.I) Muratura in mattoni pieni e malta di calce LC2_Corti

fb	fk	fvk0	fmedio	τ0	fv0	μ	ϕ	fv,lim	E	G	FC
600000			345000	9000	20000	0.58	0.77	32500	320000000	128000000	1.2

Verifica a pressoflessione nel piano secondo D.M. 17-01-18 NTC §7.8.2.2.1 in combinazioni non sismiche, γM = 3

Comb.	Quota	N	M	σ0	Mu	c.s.	Verifica
SLU 52	-2.03	-37912	6149.38	26591	40454.3	6.579	Si
SLU 52	0.67	-22660	10853.67	15893	28893.67	2.662	Si
SLU 47	-2.03	-35415	5646.6	24840	38996.26	6.906	Si
SLU 47	0.67	-20614	10092.53	14458	26859.99	2.661	Si
SLU 68	-2.03	-37595	6050.92	26369	40278.79	6.657	Si
SLU 68	0.67	-22400	10705.34	15711	28641.33	2.675	Si
SLU 73	-2.03	-40092	6553.7	28120	41588.34	6.346	Si
SLU 73	0.67	-24446	11466.48	17146	30575.33	2.666	Si
SLU 55	-2.03	-38241	6224.15	26822	40633.83	6.528	Si
SLU 55	0.67	-22911	10940.77	16069	29135.12	2.663	Si
SLU 76	-2.03	-40421	6628.47	28351	41748.3	6.298	Si
SLU 76	0.67	-24697	11553.58	17322	30804.55	2.666	Si

Comb.	Quota	N	M	σ0	Mu	c.s.	Verifica
SLU 65	-2.03	-37266	5976.14	26138	40093.47	6.709	Si
SLU 65	0.67	-22149	10618.24	15535	28396.39	2.674	Si
SLU 44	-2.03	-35086	5571.82	24609	38791.36	6.962	Si
SLU 44	0.67	-20363	10005.43	14282	26602.83	2.659	Si
SLU 5	-2.03	-27792	4510.37	19493	33492.3	7.426	Si
SLU 5	0.67	-16202	8110.97	11364	22086.24	2.723	Si
SLU 2	-2.03	-27463	4435.59	19262	33218.94	7.489	Si
SLU 2	0.67	-15951	8023.87	11188	21798.9	2.717	Si

Verifica a pressoflessione nel piano secondo D.M. 17-01-18 NTC §7.8.2.2.1 in combinazioni sismiche, γM = 2

Comb.	Quota	N	M	σ0	Mu	c.s.	Verifica
SLV 7	-2.03	-5498	1592.65	3856	8435.38	5.296	Si
SLV 7	0.67	2900	6246.35	0	0	0	No, Trazione
SLV 16	-2.03	-33655	-3460.23	23605	43016.16	12.432	Si
SLV 16	0.67	-21916	17656.08	15371	30350.85	1.719	Si
SLV 15	-2.03	-33655	-3460.23	23605	43016.16	12.432	Si
SLV 15	0.67	-21916	17656.08	15371	30350.85	1.719	Si
SLV 8	-2.03	-5498	1592.65	3856	8435.38	5.296	Si
SLV 8	0.67	2900	6246.35	0	0	0	No, Trazione
SLV 13	-2.03	-46061	-523.83	32306	53676.06	102.469	Si
SLV 13	0.67	-32712	16828.59	22943	42091.18	2.501	Si
SLV 12	-2.03	-11814	-2320.59	8286	17446.25	7.518	Si
SLV 12	0.67	-2740	11957.96	0	0	0	No, e>l/2
SLV 11	-2.03	-11814	-2320.59	8286	17446.25	7.518	Si
SLV 11	0.67	-2740	11957.96	0	0	0	No, e>l/2
SLV 3	-2.03	-12603	9583.9	8840	18521.3	1.933	Si
SLV 3	0.67	-3116	-1382.59	2185	4847.75	3.506	Si
SLV 14	-2.03	-46061	-523.83	32306	53676.06	102.469	Si
SLV 14	0.67	-32712	16828.59	22943	42091.18	2.501	Si
SLV 4	-2.03	-12603	9583.9	8840	18521.3	1.933	Si
SLV 4	0.67	-3116	-1382.59	2185	4847.75	3.506	Si

Verifica a taglio nel piano secondo D.M. 17-01-18 (N.T.C.) §7.8.2.2.2 con rottura per scorrimento in combinazioni non sismiche, γM = 3

Comb.	Quota	N	V par	M	σ0	σN	I'	fvd	Vt scorr.	Vt fess.diag.	Vt,lim	c.s.	Verifica
SLU 82	-2.03	-41479	-6449	6726.78		29092	3.1684	9435	13451			2.09	Si
SLU 82	0.67	-25749	-3202	11542.69		18060	3.1684	7964	11354			3.55	Si
SLU 81	-2.03	-41742	-6379	6615.13		29277	3.1684	9459	13486			2.11	Si
SLU 81	0.67	-26227	-3013	11111.69		18395	3.1684	8008	11418			3.79	Si
SLU 80	-2.03	-40926	-6321	6628.81		28705	3.1684	9383	13378			2.12	Si
SLU 80	0.67	-25266	-3138	11353.36		17721	3.1684	7918	11290			3.6	Si
SLU 76	-2.03	-40421	-6319	6628.47		28351	3.1684	9336	13310			2.11	Si
SLU 76	0.67	-24697	-3245	11553.58		17322	3.1684	7865	11214			3.46	Si
SLU 75	-2.03	-40667	-6293	6581.51		28523	3.1684	9359	13343			2.12	Si
SLU 75	0.67	-25066	-3131	11306.22		17581	3.1684	7900	11263			3.6	Si
SLU 77	-2.03	-41259	-6271	6544.64		28938	3.1684	9414	13422			2.14	Si
SLU 77	0.67	-25795	-2962	10962.33		18092	3.1684	7968	11360			3.84	Si
SLU 83	-2.03	-42071	-6427	6689.9		29508	3.1684	9490	13530			2.11	Si
SLU 83	0.67	-26477	-3032	11198.79		18571	3.1684	8032	11451			3.78	Si
SLU 73	-2.03	-40092	-6271	6553.7		28120	3.1684	9305	13267			2.12	Si
SLU 73	0.67	-24446	-3226	11466.48		17146	3.1684	7842	11180			3.47	Si
SLU 84	-2.03	-41808	-6497	6801.56		29323	3.1684	9465	13495			2.08	Si
SLU 84	0.67	-26000	-3221	11629.79		18236	3.1684	7987	11388			3.54	Si
SLU 78	-2.03	-40996	-6342	6656.29		28754	3.1684	9389	13387			2.11	Si
SLU 78	0.67	-25317	-3151	11393.33		17757	3.1684	7923	11297			3.59	Si

Verifica a taglio nel piano secondo D.M. 17-01-18 (N.T.C.) §7.8.2.2.2 con rottura per scorrimento in combinazioni sismiche, γM = 2

Comb.	Quota	N	V par	M	σ0	σN	I'	fvd	Vt scorr.	Vt fess.diag.	Vt,lim	c.s.	Verifica
SLV 12	-2.03	-11814	-2948	-2320.59		8286	3.1684	9991	14244			4.83	Si
SLV 12	0.67	-2740	-177	11957.96		0	0	8333	0			0	No, Vu<V
SLV 11	-2.03	-11814	-2948	-2320.59		8286	3.1684	9991	14244			4.83	Si
SLV 11	0.67	-2740	-177	11957.96		0	0	8333	0			0	No, Vu<V
SLV 4	-2.03	-12603	3383	9583.9		11333	2.4712	10600	11788			3.48	Si
SLV 4	0.67	-3116	7516	-1382.59		2185	3.1684	8770	12505			1.66	Si
SLV 16	-2.03	-33655	-10095	-3460.23		23605	3.1684	13054	18612			1.84	Si
SLV 16	0.67	-21916	-9049	17656.08		20851	2.3356	12504	13142			1.45	Si
SLV 15	-2.03	-33655	-10095	-3460.23		23605	3.1684	13054	18612			1.84	Si
SLV 15	0.67	-21916	-9049	17656.08		20851	2.3356	12504	13142			1.45	Si
SLV 8	-2.03	-5498	1095	1592.65		3856	3.1684	9105	12981			11.85	Si
SLV 8	0.67	2900	4792	6246.35		0	0	8333	0			0	No, Vu<V
SLV 7	-2.03	-5498	1095	1592.65		3856	3.1684	9105	12981			11.85	Si
SLV 7	0.67	2900	4792	6246.35		0	0	8333	0			0	No, Vu<V
SLV 13	-2.03	-46061	-12177	-523.83		32306	3.1684	14795	21094			1.73	Si
SLV 13	0.67	-32712	-11683	16828.59		22943	3.1684	12922	18424			1.58	Si
SLV 3	-2.03	-12603	3383	9583.9		11333	2.4712	10600	11788			3.48	Si
SLV 3	0.67	-3116	7516	-1382.59		2185	3.1684	8770	12505			1.66	Si
SLV 14	-2.03	-46061	-12177	-523.83		32306	3.1684	14795	21094			1.73	Si
SLV 14	0.67	-32712	-11683	16828.59		22943	3.1684	12922	18424			1.58	Si

Verifica a pressoflessione fuori piano D.M. 17-01-18 (N.T.C.)

quota -0.68 Wa 0.08 denominatore 8 γM = 2

Comb.	fd	Sa	σ0	N	M	Mc	Coeff.s.	Verifica
SLV 7	143750	0.24	2243	-3198	190.45	706.27	3.71	Si
SLV 8	143750	0.24	2243	-3198	190.45	706.27	3.71	Si
SLV 4	143750	0.24	3959	-5644	190.45	1228.84	6.45	Si
SLV 3	143750	0.24	3959	-5644	190.45	1228.84	6.45	Si
SLV 12	143750	0.24	8047	-11473	190.45	2411.39	12.66	Si
SLV 11	143750	0.24	8047	-11473	190.45	2411.39	12.66	Si
SLV 2	143750	0.24	11234	-16017	190.45	3272.45	17.18	Si
SLV 1	143750	0.24	11234	-16017	190.45	3272.45	17.18	Si
SLV 15	143750	0.24	23306	-33228	190.45	6050.36	31.77	Si

Comb.	fd	Sa	σ0	N	M	Mc	Coeff.s.	Verifica
SLV 16	143750	0.24	23306	-33228	190.45	6050.36	31.77	Si

Verifica dei meccanismi locali di collasso con analisi cinematica lineare

forza di aggancio al piano = 0 quota mezzeria = -0.68 Wa = 0.08 Ta = 0.0271

Comb.	N top	N base	V orto	α0	M*	e*	a0*	aLim	Verifica
SLV 8	2900	-5498	703	0	0	0	0	3.33245	No, Trazione
SLV 7	2900	-5498	703	0	0	0	0	3.33245	No, Trazione
SLV 13	-32712	-46061	-2404	0.025	3873.2	0.958	0.37693	3.47592	No
SLV 14	-32712	-46061	-2404	0.025	3873.2	0.958	0.37693	3.47592	No
SLV 9	-38728	-53166	-2643	0.028	4485.1	0.964	0.41543	3.33245	No
SLV 10	-38728	-53166	-2643	0.028	4485.1	0.964	0.41543	3.33245	No
SLV 16	-21916	-33655	-1585	0.032	2776.7	0.944	0.49648	3.47592	No
SLV 15	-21916	-33655	-1585	0.032	2776.7	0.944	0.49648	3.47592	No
SLV 6	-33088	-46850	-2028	0.036	3911.4	0.959	0.54198	3.33245	No
SLV 5	-33088	-46850	-2028	0.036	3911.4	0.959	0.54198	3.33245	No

Tabella dei coefficienti di sicurezza minimi

Stato limite	Coeff.s.	Comb.	Verifica
PF_SLU	2.659	SLU 44	Si
V_SLU	2.077	SLU 84	Si
PF_SLV	0	SLV 8	No
V_SLV	0	SLV 7	No
PFFP_SLV	3.708	SLV 7	Si
R_SLV	0	SLV 8	No

Maschio 44

Verifiche condotte secondo D.M. 17-01-18 (N.T.C.)

Dati geometrici

X ini.	Y ini.	X fin.	Y fin.	Quota i.	Quota.s	l	Sp.	h netta	h ini.	h fin.	a	a.s.,sx	a.s.,dx
-11.013	-3.284	-10.553	-3.284	L1	L3	0.46	0.45	2.7	2.7	2.7			

Caratteristiche del materiale

(Circolare 7 21-01-19 C8.5.I) Muratura in mattoni pieni e malta di calce LC2_Corti

fb	fk	fvk0	fmedio	τ0	fv0	μ	ϕ	fv,lim	E	G	FC
600000			345000	9000	20000	0.58	0.77	32500	320000000	128000000	1.2

Verifica a pressoflessione nel piano secondo D.M. 17-01-18 NTC §7.8.2.2.1 in combinazioni non sismiche, γM = 3

Comb.	Quota	N	M	σ0	Mu	c.s.	Verifica
SLU 79	-2.03	-10300	-1098.29	49757	921.92	0.839	No, M>Mu
SLU 79	0.02	-12600	-103.09	60871	732.44	7.105	Si
SLU 83	-2.03	-10532	-1145.87	50881	909.32	0.794	No, M>Mu
SLU 83	0.02	-12999	-102.3	62796	684.95	6.696	Si
SLU 81	-2.03	-10422	-1136.37	50350	915.46	0.806	No, M>Mu
SLU 81	0.02	-12866	-100.47	62152	701.32	6.981	Si
SLU 84	-2.03	-10596	-1118.15	51189	905.62	0.81	No, M>Mu
SLU 84	0.02	-12954	-110.04	62579	690.51	6.275	Si
SLU 74	-2.03	-10227	-1093.51	49404	925.57	0.846	No, M>Mu
SLU 74	0.02	-12518	-101.68	60472	741.74	7.295	Si
SLU 75	-2.03	-10290	-1065.8	49712	922.4	0.865	No, M>Mu
SLU 75	0.02	-12473	-109.43	60256	746.71	6.824	Si
SLU 77	-2.03	-10337	-1103.01	49935	920.02	0.834	No, M>Mu
SLU 77	0.02	-12651	-103.52	61116	726.64	7.02	Si
SLU 78	-2.03	-10400	-1075.3	50243	916.66	0.852	No, M>Mu
SLU 78	0.02	-12606	-111.26	60899	731.78	6.577	Si
SLU 80	-2.03	-10363	-1070.57	50065	918.62	0.858	No, M>Mu
SLU 80	0.02	-12555	-110.83	60654	737.51	6.654	Si
SLU 82	-2.03	-10486	-1108.65	50657	911.95	0.823	No, M>Mu
SLU 82	0.02	-12821	-108.21	61936	706.71	6.531	Si

Verifica a pressoflessione nel piano secondo D.M. 17-01-18 NTC §7.8.2.2.1 in combinazioni sismiche, γM = 2

Comb.	Quota	N	M	σ0	Mu	c.s.	Verifica
SLV 2	-2.03	-7176	-1590.48	34667	1182.21	0.743	No, M>Mu
SLV 2	0.02	-11731	-25.87	56669	1446.71	55.914	Si
SLV 1	-2.03	-7176	-1590.48	34667	1182.21	0.743	No, M>Mu
SLV 1	0.02	-11731	-25.87	56669	1446.71	55.914	Si
SLV 4	-2.03	-4839	-1607.43	0	0	0	No, e>l/2
SLV 4	0.02	-9897	-38.49	47811	1385.59	35.997	Si
SLV 3	-2.03	-4839	-1607.43	0	0	0	No, e>l/2
SLV 3	0.02	-9897	-38.49	47811	1385.59	35.997	Si
SLV 7	-2.03	-2967	-1026.69	0	0	0	No, e>l/2
SLV 7	0.02	-6254	-83.07	30211	1082.71	13.034	Si
SLV 12	-2.03	-3699	-511.96	17872	726.42	1.419	Si
SLV 12	0.02	-4964	-108.65	23982	917.69	8.446	Si
SLV 11	-2.03	-3699	-511.96	17872	726.42	1.419	Si
SLV 11	0.02	-4964	-108.65	23982	917.69	8.446	Si
SLV 8	-2.03	-2967	-1026.69	0	0	0	No, e>l/2
SLV 8	0.02	-6254	-83.07	30211	1082.71	13.034	Si
SLV 6	-2.03	-10757	-970.19	51965	1421.87	1.466	Si
SLV 6	0.02	-12366	-41.01	59737	1453.62	35.449	Si
SLV 5	-2.03	-10757	-970.19	51965	1421.87	1.466	Si
SLV 5	0.02	-12366	-41.01	59737	1453.62	35.449	Si

Verifica a taglio nel piano secondo D.M. 17-01-18 (N.T.C.) §7.8.2.2.2 con rottura per scorrimento in combinazioni non sismiche, γM = 3

Comb.	Quota	N	V par	M	σ0	σN	I'	fvd	Vt scorr.	Vt fess.diag.	Vt,lim	c.s.	Verifica
SLU 74	-2.03	-10227	-2299	-1093.51		61552	0.3692	10833	1800			0.78	No, Vu<V
SLU 74	0.02	-12518	-507	-101.68		60472	0.46	10833	2242			4.42	Si
SLU 81	-2.03	-10422	-2387	-1136.37		63821	0.3629	10833	1769			0.74	No, Vu<V
SLU 81	0.02	-12866	-528	-100.47		62152	0.46	10833	2242			4.25	Si
SLU 84	-2.03	-10596	-2358	-1118.15		63056	0.3734	10833	1820			0.77	No, Vu<V
SLU 84	0.02	-12954	-536	-110.04		62579	0.46	10833	2242			4.18	Si
SLU 79	-2.03	-10300	-2310	-1098.29		61843	0.3701	10833	1804			0.78	No, Vu<V
SLU 79	0.02	-12600	-510	-103.09		60871	0.46	10833	2242			4.4	Si
SLU 80	-2.03	-10363	-2261	-1070.57		60590	0.3801	10833	1853			0.82	No, Vu<V
SLU 80	0.02	-12555	-513	-110.83		60654	0.46	10833	2242			4.37	Si
SLU 78	-2.03	-10400	-2270	-1075.3		60848	0.3798	10833	1852			0.82	No, Vu<V
SLU 78	0.02	-12606	-515	-111.26		60899	0.46	10833	2242			4.35	Si
SLU 83	-2.03	-10532	-2407	-1145.87		64368	0.3636	10833	1773			0.74	No, Vu<V
SLU 83	0.02	-12999	-532	-102.3		62796	0.46	10833	2242			4.21	Si
SLU 82	-2.03	-10486	-2338	-1108.65		62503	0.3728	10833	1818			0.78	No, Vu<V
SLU 82	0.02	-12821	-531	-108.21		61936	0.46	10833	2242			4.22	Si
SLU 77	-2.03	-10337	-2319	-1103.01		62103	0.3699	10833	1803			0.78	No, Vu<V
SLU 77	0.02	-12651	-511	-103.52		61116	0.46	10833	2242			4.39	Si
SLU 75	-2.03	-10290	-2250	-1065.8		60291	0.3793	10833	1849			0.82	No, Vu<V
SLU 75	0.02	-12473	-511	-109.43		60256	0.46	10833	2242			4.39	Si

Verifica a taglio nel piano secondo D.M. 17-01-18 (N.T.C.) §7.8.2.2.2 con rottura per scorrimento in combinazioni sismiche, γM = 2

Comb.	Quota	N	V par	M	σ0	σN	I'	fvd	Vt scorr.	Vt fess.diag.	Vt,lim	c.s.	Verifica
SLV 11	-2.03	-3699	-1063	-511.96		29912	0.2748	14316	1771			1.67	Si
SLV 11	0.02	-4964	256	-108.65		23982	0.46	13130	2718			10.64	Si
SLV 6	-2.03	-10757	-2063	-970.19		56993	0.4194	16250	3067			1.49	Si
SLV 6	0.02	-12366	-941	-41.01		59737	0.46	16250	3364			3.57	Si
SLV 12	-2.03	-3699	-1063	-511.96		29912	0.2748	14316	1771			1.67	Si
SLV 12	0.02	-4964	256	-108.65		23982	0.46	13130	2718			10.64	Si
SLV 3	-2.03	-4839	-2784	-1607.43		0	0	8333	0			0	No, Vu<V
SLV 3	0.02	-9897	-222	-38.49		47811	0.46	16250	3364			15.15	Si
SLV 4	-2.03	-4839	-2784	-1607.43		0	0	8333	0			0	No, Vu<V
SLV 4	0.02	-9897	-222	-38.49		47811	0.46	16250	3364			15.15	Si
SLV 2	-2.03	-7176	-2857	-1590.48		635702	0.0251	16250	183			0.06	No, Vu<V
SLV 2	0.02	-11731	-571	-25.87		56669	0.46	16250	3364			5.89	Si
SLV 5	-2.03	-10757	-2063	-970.19		56993	0.4194	16250	3067			1.49	Si
SLV 5	0.02	-12366	-941	-41.01		59737	0.46	16250	3364			3.57	Si
SLV 7	-2.03	-2967	-1817	-1026.69		0	0	8333	0			0	No, Vu<V
SLV 7	0.02	-6254	223	-83.07		30211	0.46	14375	2976			13.33	Si
SLV 1	-2.03	-7176	-2857	-1590.48		635702	0.0251	16250	183			0.06	No, Vu<V
SLV 1	0.02	-11731	-571	-25.87		56669	0.46	16250	3364			5.89	Si
SLV 8	-2.03	-2967	-1817	-1026.69		0	0	8333	0			0	No, Vu<V
SLV 8	0.02	-6254	223	-83.07		30211	0.46	14375	2976			13.33	Si

Verifica a pressoflessione fuori piano D.M. 17-01-18 (N.T.C.)

quota -0.68 Wa 0.08 denominatore 8 γM = 2

Comb.	fd	Sa	σ0	N	M	Mc	Coeff.s.	Verifica
SLV 12	143750	0.24	35436	-7335	27.65	1171.78	42.38	Si
SLV 11	143750	0.24	35436	-7335	27.65	1171.78	42.38	Si
SLV 15	143750	0.24	40464	-8376	27.65	1260.5	45.59	Si
SLV 16	143750	0.24	40464	-8376	27.65	1260.5	45.59	Si
SLV 8	143750	0.24	42290	-8754	27.65	1287.94	46.58	Si
SLV 7	143750	0.24	42290	-8754	27.65	1287.94	46.58	Si
SLV 6	143750	0.24	79503	-16457	27.65	1293.54	46.78	Si
SLV 5	143750	0.24	79503	-16457	27.65	1293.54	46.78	Si
SLV 1	143750	0.24	74475	-15416	27.65	1354.47	48.98	Si
SLV 2	143750	0.24	74475	-15416	27.65	1354.47	48.98	Si

Verifica dei meccanismi locali di collasso con analisi cinematica lineare

forza di aggancio al piano = 0 quota mezzeria = -0.68 Wa = 0.08 Ta = 0.0271

Comb.	N top	N base	V orto	α0	M*	e*	a0*	aLim	Verifica
SLV 5	-9934	-10757	-165	0.072	1090.2	0.978	1.06419	3.33245	No
SLV 6	-9934	-10757	-165	0.072	1090.2	0.978	1.06419	3.33245	No
SLV 10	-8670	-11489	-150	0.072	961.4	0.975	1.06678	3.33245	No
SLV 9	-8670	-11489	-150	0.072	961.4	0.975	1.06678	3.33245	No
SLV 2	-9586	-7176	-112	0.076	1054.7	0.977	1.13605	3.47592	No
SLV 1	-9586	-7176	-112	0.076	1054.7	0.977	1.13605	3.47592	No
SLV 13	-5371	-9617	-64	0.08	625.5	0.962	1.20233	3.47592	No
SLV 14	-5371	-9617	-64	0.08	625.5	0.962	1.20233	3.47592	No
SLV 3	-8022	-4839	-53	0.082	895.5	0.973	1.2255	3.47592	No
SLV 4	-8022	-4839	-53	0.082	895.5	0.973	1.2255	3.47592	No

Tabella dei coefficienti di sicurezza minimi

Stato limite	Coeff.s.	Comb.	Verifica
PF_SLU	0.794	SLU 83	No
V_SLU	0.737	SLU 83	No
PF_SLV	0	SLV 3	No
V_SLV	0	SLV 3	No
PFFP_SLV	42.377	SLV 11	Si
R_SLV	0.319	SLV 5	No

Maschio 45

Verifiche condotte secondo D.M. 17-01-18 (N.T.C.)

Dati geometrici

X ini.	Y ini.	X fin.	Y fin.	Quota i.	Quota.s	l	Sp.	h netta	h ini.	h fin.	a	a.s.,sx	a.s.,dx
-7.844	-3.284	-7.844	-4.725	L1	L3	1.441	0.45	2.7	2.7	2.7			

Caratteristiche del materiale

(Circolare 7 21-01-19 C8.5.I) Muratura in mattoni pieni e malta di calce LC2_Corti

fb	fk	fvk0	fmedio	τ0	fv0	μ	ϕ	fv,lim	E	G	FC
600000			345000	9000	20000	0.58	0.77	32500	320000000	128000000	1.2

Verifica a pressoflessione nel piano secondo D.M. 17-01-18 NTC §7.8.2.2.1 in combinazioni non sismiche, γM = 3

Comb.	Quota	N	M	σ0	Mu	c.s.	Verifica
SLU 69	-2.03	-6691	1986.05	10316	4211.85	2.121	Si
SLU 69	0.67	-3153	2243.52	4861	2136.87	0.952	No, M>Mu
SLU 77	-2.03	-6935	2169.42	10691	4342.06	2.001	Si
SLU 77	0.67	-3408	2424.7	5254	2297.57	0.948	No, M>Mu
SLU 83	-2.03	-7013	2221.15	10812	4383.57	1.974	Si
SLU 83	0.67	-3480	2474.92	5366	2343.13	0.947	No, M>Mu
SLU 62	-2.03	-6821	2070.05	10516	4281.28	2.068	Si
SLU 62	0.67	-3274	2327.16	5048	2213.67	0.951	No, M>Mu
SLU 58	-2.03	-6742	2014.82	10395	4239.23	2.104	Si
SLU 58	0.67	-3203	2276.89	4938	2168.46	0.952	No, M>Mu
SLU 74	-2.03	-6909	2146.07	10652	4328.31	2.017	Si
SLU 74	0.67	-3370	2397.32	5196	2273.94	0.949	No, M>Mu
SLU 60	-2.03	-6795	2046.7	10476	4267.45	2.085	Si
SLU 60	0.67	-3237	2299.79	4990	2189.9	0.952	No, M>Mu
SLU 81	-2.03	-6987	2197.8	10772	4369.87	1.988	Si
SLU 81	0.67	-3443	2447.54	5308	2319.57	0.948	No, M>Mu
SLU 56	-2.03	-6743	2018.33	10395	4239.36	2.1	Si
SLU 56	0.67	-3202	2276.94	4936	2167.71	0.952	No, M>Mu
SLU 79	-2.03	-6935	2165.91	10691	4341.93	2.005	Si
SLU 79	0.67	-3409	2424.65	5255	2298.32	0.948	No, M>Mu

Verifica a pressoflessione nel piano secondo D.M. 17-01-18 NTC §7.8.2.2.1 in combinazioni sismiche, γM = 2

Comb.	Quota	N	M	σ0	Mu	c.s.	Verifica
SLV 1	-2.03	-1176	1206.91	0	0	0	No, e>l/2
SLV 1	0.67	2875	-1043.6	0	0	0	No, Trazione
SLV 2	-2.03	-1176	1206.91	0	0	0	No, e>l/2
SLV 2	0.67	2875	-1043.6	0	0	0	No, Trazione
SLV 6	-2.03	-115	5268.3	0	0	0	No, e>l/2
SLV 6	0.67	5387	-1896.4	0	0	0	No, Trazione
SLV 13	-2.03	-6566	4348.41	10123	4340.3	0.998	No, M>Mu
SLV 13	0.67	-3577	2619.53	0	0	0	No, e>l/2
SLV 4	-2.03	-3703	-1331.82	5709	2544.07	1.91	Si
SLV 4	0.67	-1215	786.32	1873	862.05	1.096	Si
SLV 3	-2.03	-3703	-1331.82	5709	2544.07	1.91	Si
SLV 3	0.67	-1215	786.32	1873	862.05	1.096	Si
SLV 5	-2.03	-115	5268.3	0	0	0	No, e>l/2
SLV 5	0.67	5387	-1896.4	0	0	0	No, Trazione
SLV 10	-2.03	-1732	6210.74	0	0	0	No, e>l/2
SLV 10	0.67	3452	-797.46	0	0	0	No, Trazione
SLV 9	-2.03	-1732	6210.74	0	0	0	No, e>l/2
SLV 9	0.67	3452	-797.46	0	0	0	No, Trazione
SLV 14	-2.03	-6566	4348.41	10123	4340.3	0.998	No, M>Mu
SLV 14	0.67	-3577	2619.53	0	0	0	No, e>l/2

Verifica a taglio nel piano secondo D.M. 17-01-18 (N.T.C.) §7.8.2.2.2 con rottura per scorrimento in combinazioni non sismiche, γM = 3

Comb.	Quota	N	V par	M	σ0	σN	l'	fvd	Vt scorr.	Vt fess.diag.	Vt,lim	c.s.	Verifica
SLU 69	-2.03	-6691	-30	1986.05		11693	1.2717	7115	4071			137.95	Si
SLU 69	0.67	-3153	488	2243.52		254222	0.0276	10833	134			0.28	No, Vu<V
SLU 79	-2.03	-6935	-33	2165.91		12578	1.2251	7233	3987			121.91	Si
SLU 79	0.67	-3409	522	2424.65		267530	0.0283	10833	138			0.26	No, Vu<V
SLU 77	-2.03	-6935	-32	2169.42		12594	1.2237	7235	3984			124.9	Si
SLU 77	0.67	-3408	524	2424.7		275065	0.0275	10833	134			0.26	No, Vu<V
SLU 81	-2.03	-6987	-35	2197.8		12743	1.2185	7255	3978			114.19	Si
SLU 81	0.67	-3443	522	2447.54		260547	0.0294	10833	143			0.27	No, Vu<V
SLU 58	-2.03	-6742	-32	2014.82		11838	1.2656	7134	4063			125.26	Si
SLU 58	0.67	-3203	490	2276.89		241234	0.0295	10833	144			0.29	No, Vu<V
SLU 74	-2.03	-6909	-32	2146.07		12480	1.2303	7219	3997			123.18	Si
SLU 74	0.67	-3370	516	2397.32		266743	0.0281	10833	137			0.27	No, Vu<V
SLU 66	-2.03	-6666	-30	1962.7		11583	1.2788	7100	4086			135.88	Si
SLU 66	0.67	-3115	480	2216.14		245920	0.0282	10833	137			0.29	No, Vu<V
SLU 83	-2.03	-7013	-34	2221.15		12859	1.212	7270	3965			115.66	Si
SLU 83	0.67	-3480	530	2474.92		268403	0.0288	10833	140			0.27	No, Vu<V
SLU 56	-2.03	-6743	-32	2018.33		11853	1.2641	7136	4059			128.36	Si
SLU 56	0.67	-3202	492	2276.94		248171	0.0287	10833	140			0.28	No, Vu<V
SLU 71	-2.03	-6691	-30	1982.54		11678	1.2733	7113	4075			134.38	Si
SLU 71	0.67	-3154	486	2243.47		246720	0.0284	10833	139			0.28	No, Vu<V

Verifica a taglio nel piano secondo D.M. 17-01-18 (N.T.C.) §7.8.2.2.2 con rottura per scorrimento in combinazioni sismiche, γM = 2

Comb.	Quota	N	V par	M	σ0	σN	l'	fvd	Vt scorr.	Vt fess.diag.	Vt,lim	c.s.	Verifica
SLV 9	-2.03	-1732	2029	6210.74		0	0	8333	0			0	No, Vu<V
SLV 9	0.67	3452	2792	-797.46		0	0	8333	0			0	No, Vu<V
SLV 11	-2.03	-10154	-2147	-2251.72		15654	1.4414	11464	7436			3.46	Si
SLV 11	0.67	-10179	-2328	5302.24		37733	0.5995	15880	4284			1.84	Si
SLV 13	-2.03	-6566	488	4348.41		83177	0.1754	16250	1283			2.63	Si
SLV 13	0.67	-3577	688	2619.53		0	0	8333	0			0	No, Vu<V
SLV 10	-2.03	-1732	2029	6210.74		0	0	8333	0			0	No, Vu<V
SLV 10	0.67	3452	2792	-797.46		0	0	8333	0			0	No, Vu<V
SLV 12	-2.03	-10154	-2147	-2251.72		15654	1.4414	11464	7436			3.46	Si
SLV 12	0.67	-10179	-2328	5302.24		37733	0.5995	15880	4284			1.84	Si

Comb.	Quota	N	V par	M	σ0	σN	l'	fvd	Vt scorr.	Vt fess.diag.	Vt,lim	c.s.	Verifica
SLV 5	-2.03	-115	2097	5268.3		0	0	8333	0			0	No, Vu<V
SLV 5	0.67	5387	3059	-1896.4		0	0	8333	0			0	No, Vu<V
SLV 14	-2.03	-6566	488	4348.41		83177	0.1754	16250	1283			2.63	Si
SLV 14	0.67	-3577	688	2619.53		0	0	8333	0			0	No, Vu<V
SLV 1	-2.03	-1176	715	1206.91		0	0	8333	0			0	No, Vu<V
SLV 1	0.67	2875	1579	-1043.6		0	0	8333	0			0	No, Vu<V
SLV 6	-2.03	-115	2097	5268.3		0	0	8333	0			0	No, Vu<V
SLV 6	0.67	5387	3059	-1896.4		0	0	8333	0			0	No, Vu<V
SLV 2	-2.03	-1176	715	1206.91		0	0	8333	0			0	No, Vu<V
SLV 2	0.67	2875	1579	-1043.6		0	0	8333	0			0	No, Vu<V

Verifica a pressoflessione fuori piano D.M. 17-01-18 (N.T.C.)

quota -0.68 Wa 0.08 denominatore 8 γM = 2

Comb.	fd	Sa	σ0	N	M	Mc	Coeff.s.	Verifica
SLV 5	143750	0.24	842	-546	86.65	122.1	1.41	Si
SLV 6	143750	0.24	842	-546	86.65	122.1	1.41	Si
SLV 1	143750	0.24	1843	-1195	86.65	264.89	3.06	Si
SLV 2	143750	0.24	1843	-1195	86.65	264.89	3.06	Si
SLV 10	143750	0.24	2359	-1530	86.65	337.59	3.9	Si
SLV 9	143750	0.24	2359	-1530	86.65	337.59	3.9	Si
SLV 4	143750	0.24	4217	-2735	86.65	594.15	6.86	Si
SLV 3	143750	0.24	4217	-2735	86.65	594.15	6.86	Si
SLV 13	143750	0.24	6897	-4474	86.65	949.76	10.96	Si
SLV 14	143750	0.24	6897	-4474	86.65	949.76	10.96	Si

Verifica dei meccanismi locali di collasso con analisi cinematica lineare

forza di aggancio al piano = 0 quota mezzeria = -0.68 Wa = 0.08 Ta = 0.0271

Comb.	N top	N base	V orto	α0	M*	e*	a0*	aLim	Verifica
SLV 9	3452	-1732	251	0	0	0	0	3.33245	No, Trazione
SLV 6	5387	-115	352	0	0	0	0	3.33245	No, Trazione
SLV 1	2875	-1176	81	0	0	0	0	3.47592	No, Trazione
SLV 10	3452	-1732	251	0	0	0	0	3.33245	No, Trazione
SLV 2	2875	-1176	81	0	0	0	0	3.47592	No, Trazione
SLV 5	5387	-115	352	0	0	0	0	3.33245	No, Trazione
SLV 8	-8244	-8537	-758	0.02	1088.4	0.937	0.30296	3.33245	No
SLV 7	-8244	-8537	-758	0.02	1088.4	0.937	0.30296	3.33245	No
SLV 12	-10179	-10154	-859	0.021	1284.4	0.945	0.33017	3.33245	No
SLV 11	-10179	-10154	-859	0.021	1284.4	0.945	0.33017	3.33245	No

Tabella dei coefficienti di sicurezza minimi

Stato limite	Coeff.s.	Comb.	Verifica
PF_SLU	0.947	SLU 83	No
V_SLU	0.256	SLU 77	No
PF_SLV	0	SLV 10	No
V_SLV	0	SLV 1	No
PFFP_SLV	1.409	SLV 5	Si
R_SLV	0	SLV 10	No

Maschio 46

Verifiche condotte secondo D.M. 17-01-18 (N.T.C.)

Dati geometrici

X ini.	Y ini.	X fin.	Y fin.	Quota i.	Quota.s	l	Sp.	h netta	h ini.	h fin.	a	a.s.,sx	a.s.,dx
-6.268	1.046	-6.268	-3.284	L1	L3	4.33	0.3	2.7	2.7	2.7			

Caratteristiche del materiale

(Circolare 7 21-01-19 C8.5.I) Muratura in mattoni pieni e malta di calce LC2_Corti

fb	fk	fvk0	fmedio	τ0	fv0	μ	ϕ	fv,lim	E	G	FC
600000			345000	9000	20000	0.58	0.77	32500	320000000	128000000	1.2

Verifica a pressoflessione nel piano secondo D.M. 17-01-18 NTC §7.8.2.2.1 in combinazioni non sismiche, γM = 3

Comb.	Quota	N	M	σ0	Mu	c.s.	Verifica
SLU 78	-2.03	-69571	-16014.9	53557	51590.62	3.221	Si
SLU 78	0.67	-55267	2592.9	42546	57158.07	22.044	Si
SLU 79	-2.03	-69614	-18107.42	53591	51560.86	2.847	Si
SLU 79	0.67	-55396	2689.49	42645	57145.28	21.248	Si
SLU 82	-2.03	-70371	-16324.57	54174	51031.58	3.126	Si
SLU 82	0.67	-55780	2571.12	42941	57103.17	22.209	Si
SLU 74	-2.03	-69239	-17980.77	53302	51814.77	2.882	Si
SLU 74	0.67	-55057	2691.43	42384	57177.51	21.244	Si
SLU 77	-2.03	-70073	-18290.89	53944	51242.86	2.802	Si
SLU 77	0.67	-55817	2661.35	42969	57098.77	21.455	Si
SLU 62	-2.03	-65386	-16495.78	50336	54085.9	3.279	Si
SLU 62	0.67	-51662	2867.93	39770	57240.3	19.959	Si
SLU 80	-2.03	-69112	-15831.43	53204	51899.19	3.278	Si
SLU 80	0.67	-54846	2621.04	42222	57195.1	21.821	Si
SLU 83	-2.03	-71708	-18910.68	55203	50039.61	2.646	Si
SLU 83	0.67	-57091	2609.47	43950	56913.96	21.811	Si
SLU 81	-2.03	-70874	-18600.56	54560	50667.35	2.724	Si
SLU 81	0.67	-56330	2639.56	43364	57032.34	21.607	Si
SLU 84	-2.03	-71206	-16634.69	54816	50420.99	3.031	Si
SLU 84	0.67	-56541	2541.03	43526	57001.91	22.433	Si

Verifica a pressoflessione nel piano secondo D.M. 17-01-18 NTC §7.8.2.2.1 in combinazioni sismiche, γM = 2

Comb.	Quota	N	M	σ0	Mu	c.s.	Verifica
SLV 16	-2.03	-47321	-27405.89	36429	71905.67	2.624	Si
SLV 16	0.67	-34789	-6419.18	26781	58809.47	9.162	Si
SLV 5	-2.03	-49350	16285.99	37991	73623.2	4.521	Si
SLV 5	0.67	-44231	13096.25	34050	69074.34	5.274	Si
SLV 6	-2.03	-49350	16285.99	37991	73623.2	4.521	Si
SLV 6	0.67	-44231	13096.25	34050	69074.34	5.274	Si
SLV 1	-2.03	-47824	4076.24	36816	72342.01	17.747	Si
SLV 1	0.67	-40170	11011.45	30924	64957.39	5.899	Si
SLV 8	-2.03	-45609	-34765.65	35111	70369.44	2.024	Si
SLV 8	0.67	-31166	-4893.91	23992	54225.55	11.08	Si
SLV 12	-2.03	-45795	-39615.64	35254	70540	1.781	Si
SLV 12	0.67	-30728	-8503.98	23655	53646.46	6.308	Si
SLV 11	-2.03	-45795	-39615.64	35254	70540	1.781	Si
SLV 11	0.67	-30728	-8503.98	23655	53646.46	6.308	Si
SLV 15	-2.03	-47321	-27405.89	36429	71905.67	2.624	Si
SLV 15	0.67	-34789	-6419.18	26781	58809.47	9.162	Si
SLV 2	-2.03	-47824	4076.24	36816	72342.01	17.747	Si
SLV 2	0.67	-40170	11011.45	30924	64957.39	5.899	Si
SLV 7	-2.03	-45609	-34765.65	35111	70369.44	2.024	Si
SLV 7	0.67	-31166	-4893.91	23992	54225.55	11.08	Si

Verifica a taglio nel piano secondo D.M. 17-01-18 (N.T.C.) §7.8.2.2.2 con rottura per scorrimento in combinazioni non sismiche, γM = 3

Comb.	Quota	N	V par	M	σ0	σN	l'	fvd	Vt scorr.	Vt fess.diag.	Vt,lim	c.s.	Verifica
SLU 26	-2.03	-50133	2796	-9164.31		38594	4.33	10701	13901			4.97	Si
SLU 26	0.67	-39564	1966	2040.77		30458	4.33	9617	12492			6.36	Si
SLU 68	-2.03	-61110	2802	-11406.13		47044	4.33	10833	14073			5.02	Si
SLU 68	0.67	-47990	1784	2862.39		36944	4.33	10481	13615			7.63	Si
SLU 76	-2.03	-67943	2810	-14003.99		52304	4.33	10833	14073			5.01	Si
SLU 76	0.67	-53719	1698	2605.5		41354	4.33	10833	14073			8.29	Si
SLU 10	-2.03	-49809	2781	-9037.16		38344	4.33	10668	13858			4.98	Si
SLU 10	0.67	-39103	1961	2072.41		30103	4.33	9569	12430			6.34	Si
SLU 2	-2.03	-42977	2773	-6439.29		33084	4.33	9967	12947			4.67	Si
SLU 2	0.67	-33375	2047	2329.3		25693	4.33	8981	11667			5.7	Si
SLU 55	-2.03	-61620	2800	-11589.09		47437	4.33	10833	14073			5.03	Si
SLU 55	0.67	-48290	1779	2863.95		37175	4.33	10512	13655			7.68	Si
SLU 23	-2.03	-49299	2782	-8854.19		37951	4.33	10616	13790			4.96	Si
SLU 23	0.67	-38804	1966	2070.85		29872	4.33	9538	12390			6.3	Si
SLU 13	-2.03	-50644	2794	-9347.27		38987	4.33	10754	13969			5	Si
SLU 13	0.67	-39864	1960	2042.33		30688	4.33	9647	12532			6.39	Si
SLU 34	-2.03	-56966	2804	-11762.18		43854	4.33	10833	14073			5.02	Si
SLU 34	0.67	-45293	1879	1783.88		34867	4.33	10205	13256			7.05	Si
SLU 5	-2.03	-43811	2787	-6749.41		33727	4.33	10052	13058			4.69	Si
SLU 5	0.67	-34136	2047	2299.22		26278	4.33	9059	11768			5.75	Si

Verifica a taglio nel piano secondo D.M. 17-01-18 (N.T.C.) §7.8.2.2.2 con rottura per scorrimento in combinazioni sismiche, γM = 2

Comb.	Quota	N	V par	M	σ0	σN	l'	fvd	Vt scorr.	Vt fess.diag.	Vt,lim	c.s.	Verifica
SLV 10	-2.03	-49536	18559	11435.99		38134	4.33	15960	20732			1.12	Si
SLV 10	0.67	-43792	18157	9486.17		33712	4.33	15076	19583			1.08	Si
SLV 7	-2.03	-45609	-18488	-34765.65		36127	4.2082	15559	19642			1.06	Si
SLV 7	0.67	-31166	-19647	-4893.91		23992	4.33	13132	17058			0.87	No, Vu<V
SLV 6	-2.03	-49350	19810	16285.99		37991	4.33	15932	20695			1.04	Si
SLV 6	0.67	-44231	17947	13096.25		34050	4.33	15143	19671			1.1	Si
SLV 12	-2.03	-45795	-19739	-39615.64		39143	3.8998	16162	18908			0.96	No, Vu<V
SLV 12	0.67	-30728	-19437	-8503.98		23655	4.33	13064	16971			0.87	No, Vu<V
SLV 2	-2.03	-47824	7865	4076.24		36816	4.33	15697	20390			2.59	Si
SLV 2	0.67	-40170	4545	11011.45		30924	4.33	14518	18859			4.15	Si
SLV 9	-2.03	-49536	18559	11435.99		38134	4.33	15960	20732			1.12	Si
SLV 9	0.67	-43792	18157	9486.17		33712	4.33	15076	19583			1.08	Si
SLV 11	-2.03	-45795	-19739	-39615.64		39143	3.8998	16162	18908			0.96	No, Vu<V
SLV 11	0.67	-30728	-19437	-8503.98		23655	4.33	13064	16971			0.87	No, Vu<V
SLV 1	-2.03	-47824	7865	4076.24		36816	4.33	15697	20390			2.59	Si
SLV 1	0.67	-40170	4545	11011.45		30924	4.33	14518	18859			4.15	Si
SLV 5	-2.03	-49350	19810	16285.99		37991	4.33	15932	20695			1.04	Si
SLV 5	0.67	-44231	17947	13096.25		34050	4.33	15143	19671			1.1	Si
SLV 8	-2.03	-45609	-18488	-34765.65		36127	4.2082	15559	19642			1.06	Si
SLV 8	0.67	-31166	-19647	-4893.91		23992	4.33	13132	17058			0.87	No, Vu<V

Verifica a pressoflessione fuori piano D.M. 17-01-18 (N.T.C.)

quota -0.68 Wa 0.05 denominatore 8 γM = 2

Comb.	fd	Sa	σ0	N	M	Mc	Coeff.s.	Verifica
SLV 11	143750	0.24	31927	-41473	173.52	4595.44	26.48	Si
SLV 12	143750	0.24	31927	-41473	173.52	4595.44	26.48	Si
SLV 8	143750	0.24	32052	-41636	173.52	4607.08	26.55	Si
SLV 7	143750	0.24	32052	-41636	173.52	4607.08	26.55	Si
SLV 15	143750	0.24	33740	-43828	173.52	4758.84	27.43	Si
SLV 16	143750	0.24	33740	-43828	173.52	4758.84	27.43	Si
SLV 3	143750	0.24	34158	-44371	173.52	4795.04	27.63	Si
SLV 4	143750	0.24	34158	-44371	173.52	4795.04	27.63	Si
SLV 14	143750	0.24	35419	-46009	173.52	4900.85	28.24	Si
SLV 13	143750	0.24	35419	-46009	173.52	4900.85	28.24	Si

Verifica dei meccanismi locali di collasso con analisi cinematica lineare

forza di aggancio al piano = 0 quota mezzeria = -0.68 Wa = 0.05 Ta = 0.0406

Comb.	N top	N base	V orto	α0	M*	e*	a0*	aLim	Verifica
SLV 2	-40170	-47824	-44	0.059	4583.5	0.967	0.8803	4.36108	No
SLV 1	-40170	-47824	-44	0.059	4583.5	0.967	0.8803	4.36108	No
SLV 16	-34789	-47321	33	0.059	4035.9	0.963	0.89486	4.36108	No
SLV 15	-34789	-47321	33	0.059	4035.9	0.963	0.89486	4.36108	No

Comb.	N top	N base	V orto	α0	M*	e*	a0*	aLim	Verifica
SLV 14	-38708	-48443	2	0.06	4434.7	0.966	0.8978	4.36108	No
SLV 13	-38708	-48443	2	0.06	4434.7	0.966	0.8978	4.36108	No
SLV 3	-36250	-46702	-13	0.06	4184.6	0.964	0.89923	4.36108	No
SLV 4	-36250	-46702	-13	0.06	4184.6	0.964	0.89923	4.36108	No
SLV 6	-44231	-49350	-64	0.058	4996.9	0.97	0.86785	4.07946	No
SLV 5	-44231	-49350	-64	0.058	4996.9	0.97	0.86785	4.07946	No

Tabella dei coefficienti di sicurezza minimi

Stato limite	Coeff.s.	Comb.	Verifica
PF_SLU	2.646	SLU 83	Si
V_SLU	4.669	SLU 2	Si
PF_SLV	1.781	SLV 11	Si
V_SLV	0.868	SLV 7	No
PFFP_SLV	26.484	SLV 11	Si
R_SLV	0.202	SLV 1	No

Maschio 47

Verifiche condotte secondo D.M. 17-01-18 (N.T.C.)

Dati geometrici

X ini.	Y ini.	X fin.	Y fin.	Quota i.	Quota.s	l	Sp.	h netta	h ini.	h fin.	a	a.s.,sx	a.s.,dx
-8.253	-3.284	-7.463	-3.284	L1	L3	0.79	0.45	2.7	2.7	2.7			

Caratteristiche del materiale

(Circolare 7 21-01-19 C8.5.I) Muratura in mattoni pieni e malta di calce LC2_Corti

fb	fk	fvk0	fmedio	τ0	fv0	μ	ϕ	fv,lim	E	G	FC
600000			345000	9000	20000	0.58	0.77	32500	320000000	128000000	1.2

Verifica a pressoflessione nel piano secondo D.M. 17-01-18 NTC §7.8.2.2.1 in combinazioni non sismiche, γM = 3

Comb.	Quota	N	M	σ0	Mu	c.s.	Verifica
SLU 80	-0.03	-24356	2758.28	68513	1528.98	0.554	No, M>Mu
SLU 80	0.37	-22728	2603.54	63933	1931.46	0.742	No, M>Mu
SLU 83	-0.03	-25250	2808.92	71026	1277.36	0.455	No, M>Mu
SLU 83	0.37	-23582	2700.1	66336	1729.3	0.64	No, M>Mu
SLU 82	-0.03	-24979	2823.01	70263	1355.99	0.48	No, M>Mu
SLU 82	0.37	-23288	2664.92	65508	1801.22	0.676	No, M>Mu
SLU 81	-0.03	-25002	2780.56	70329	1349.28	0.485	No, M>Mu
SLU 81	0.37	-23344	2672.54	65664	1787.81	0.669	No, M>Mu
SLU 75	-0.03	-24221	2742.69	68132	1565.16	0.571	No, M>Mu
SLU 75	0.37	-22598	2589.35	63568	1960.45	0.757	No, M>Mu
SLU 79	-0.03	-24380	2715.83	68578	1522.66	0.561	No, M>Mu
SLU 79	0.37	-22784	2611.17	64090	1918.9	0.735	No, M>Mu
SLU 78	-0.03	-24469	2771.04	68829	1498.51	0.541	No, M>Mu
SLU 78	0.37	-22837	2616.91	64240	1906.79	0.729	No, M>Mu
SLU 74	-0.03	-24244	2700.24	68198	1558.93	0.577	No, M>Mu
SLU 74	0.37	-22654	2596.97	63725	1948.09	0.75	No, M>Mu
SLU 84	-0.03	-25226	2851.36	70960	1284.23	0.45	No, M>Mu
SLU 84	0.37	-23527	2692.48	66180	1743.06	0.647	No, M>Mu
SLU 77	-0.03	-24492	2728.6	68895	1492.13	0.547	No, M>Mu
SLU 77	0.37	-22893	2624.54	64396	1894.07	0.722	No, M>Mu

Verifica a pressoflessione nel piano secondo D.M. 17-01-18 NTC §7.8.2.2.1 in combinazioni sismiche, γM = 2

Comb.	Quota	N	M	σ0	Mu	c.s.	Verifica
SLV 2	-0.03	-17122	1405.26	48162	4097.28	2.916	Si
SLV 2	0.37	-17658	2881.03	49670	4139.49	1.437	Si
SLV 10	-0.03	-22824	2753.52	64203	4278.35	1.554	Si
SLV 10	0.37	-21509	1856.93	60503	4289.07	2.31	Si
SLV 3	-0.03	-13627	985.19	38333	3694.12	3.75	Si
SLV 3	0.37	-14018	2658.63	39432	3750.21	1.411	Si
SLV 9	-0.03	-22824	2753.52	64203	4278.35	1.554	Si
SLV 9	0.37	-21509	1856.93	60503	4289.07	2.31	Si
SLV 7	-0.03	-10427	957.21	29330	3129.96	3.27	Si
SLV 7	0.37	-9559	1708.02	26889	2944.92	1.724	Si
SLV 1	-0.03	-17122	1405.26	48162	4097.28	2.916	Si
SLV 1	0.37	-17658	2881.03	49670	4139.49	1.437	Si
SLV 8	-0.03	-10427	957.21	29330	3129.96	3.27	Si
SLV 8	0.37	-9559	1708.02	26889	2944.92	1.724	Si
SLV 4	-0.03	-13627	985.19	38333	3694.12	3.75	Si
SLV 4	0.37	-14018	2658.63	39432	3750.21	1.411	Si
SLV 14	-0.03	-19624	2725.53	55200	4249.55	1.559	Si
SLV 14	0.37	-17050	906.32	47960	4091.23	4.514	Si
SLV 13	-0.03	-19624	2725.53	55200	4249.55	1.559	Si
SLV 13	0.37	-17050	906.32	47960	4091.23	4.514	Si

Verifica a taglio nel piano secondo D.M. 17-01-18 (N.T.C.) §7.8.2.2.2 con rottura per scorrimento in combinazioni non sismiche, γM = 3

Comb.	Quota	N	V par	M	σ0	σN	l'	fvd	Vt scorr.	Vt fess.diag.	Vt,lim	c.s.	Verifica
SLU 83	-0.03	-25250	749	2808.92		71026	0.79	10833	3851			5.14	Si
SLU 83	0.37	-23582	955	2700.1		66336	0.79	10833	3851			4.03	Si
SLU 55	-0.03	-21881	945	2516.59		61551	0.79	10833	3851			4.07	Si
SLU 55	0.37	-20384	864	2333.06		57339	0.79	10833	3851			4.46	Si
SLU 78	-0.03	-24469	881	2771.04		68829	0.79	10833	3851			4.37	Si
SLU 78	0.37	-22837	950	2616.91		64240	0.79	10833	3851			4.05	Si
SLU 75	-0.03	-24221	879	2742.69		68132	0.79	10833	3851			4.38	Si
SLU 75	0.37	-22598	946	2589.35		63568	0.79	10833	3851			4.07	Si
SLU 82	-0.03	-24979	926	2823.01		70263	0.79	10833	3851			4.16	Si
SLU 82	0.37	-23288	1008	2664.92		65508	0.79	10833	3851			3.82	Si

Comb.	Quota	N	V par	M	σ0	σN	l'	fvd	Vt scorr.	Vt fess.diag.	Vt,lim	c.s.	Verifica
SLU 80	-0.03	-24356	884	2758.28		68513	0.79	10833	3851			4.36	Si
SLU 80	0.37	-22728	949	2603.54		63933	0.79	10833	3851			4.06	Si
SLU 84	-0.03	-25226	928	2851.36		70960	0.79	10833	3851			4.15	Si
SLU 84	0.37	-23527	1012	2692.48		66180	0.79	10833	3851			3.81	Si
SLU 81	-0.03	-25002	747	2780.56		70329	0.79	10833	3851			5.15	Si
SLU 81	0.37	-23344	952	2672.54		65664	0.79	10833	3851			4.05	Si
SLU 76	-0.03	-24093	1001	2758.22		67772	0.79	10833	3851			3.85	Si
SLU 76	0.37	-22452	983	2570.9		63157	0.79	10833	3851			3.92	Si
SLU 73	-0.03	-23845	999	2729.87		67076	0.79	10833	3851			3.85	Si
SLU 73	0.37	-22214	979	2543.34		62486	0.79	10833	3851			3.93	Si

Verifica a taglio nel piano secondo D.M. 17-01-18 (N.T.C.) §7.8.2.2.2 con rottura per scorrimento in combinazioni sismiche, γM = 2

Comb.	Quota	N	V par	M	σ0	σN	l'	fvd	Vt scorr.	Vt fess.diag.	Vt,lim	c.s.	Verifica
SLV 16	-0.03	-16130	4578	2305.47		47400	0.7562	16250	5530			1.21	Si
SLV 16	0.37	-13410	1729	683.93		37722	0.79	15878	5645			3.26	Si
SLV 2	-0.03	-17122	-3626	1405.26		48162	0.79	16250	5777			1.59	Si
SLV 2	0.37	-17658	-571	2881.03		56417	0.6955	16250	5086			8.91	Si
SLV 9	-0.03	-22824	4102	2753.52		64203	0.79	16250	5777			1.41	Si
SLV 9	0.37	-21509	2305	1856.93		60503	0.79	16250	5777			2.51	Si
SLV 4	-0.03	-13627	-4945	985.19		38333	0.79	16000	5688			1.15	Si
SLV 4	0.37	-14018	-1331	2658.63		50568	0.616	16250	4505			3.38	Si
SLV 1	-0.03	-17122	-3626	1405.26		48162	0.79	16250	5777			1.59	Si
SLV 1	0.37	-17658	-571	2881.03		56417	0.6955	16250	5086			8.91	Si
SLV 13	-0.03	-19624	5896	2725.53		56757	0.7683	16250	5618			0.95	No, Vu<V
SLV 13	0.37	-17050	2489	906.32		47960	0.79	16250	5777			2.32	Si
SLV 10	-0.03	-22824	4102	2753.52		64203	0.79	16250	5777			1.41	Si
SLV 10	0.37	-21509	2305	1856.93		60503	0.79	16250	5777			2.51	Si
SLV 15	-0.03	-16130	4578	2305.47		47400	0.7562	16250	5530			1.21	Si
SLV 15	0.37	-13410	1729	683.93		37722	0.79	15878	5645			3.26	Si
SLV 3	-0.03	-13627	-4945	985.19		38333	0.79	16000	5688			1.15	Si
SLV 3	0.37	-14018	-1331	2658.63		50568	0.616	16250	4505			3.38	Si
SLV 14	-0.03	-19624	5896	2725.53		56757	0.7683	16250	5618			0.95	No, Vu<V
SLV 14	0.37	-17050	2489	906.32		47960	0.79	16250	5777			2.32	Si

Verifica a pressoflessione fuori piano D.M. 17-01-18 (N.T.C.)

quota -0.68 Wa 0.08 denominatore 8 γM = 2

Comb.	fd	Sa	σ0	N	M	Mc	Coeff.s.	Verifica
SLV 11	143750	0.24	28005	-9956	47.49	1726.63	36.36	Si
SLV 12	143750	0.24	28005	-9956	47.49	1726.63	36.36	Si
SLV 8	143750	0.24	30403	-10808	47.49	1826.75	38.47	Si
SLV 7	143750	0.24	30403	-10808	47.49	1826.75	38.47	Si
SLV 16	143750	0.24	36557	-12996	47.49	2049.26	43.15	Si
SLV 15	143750	0.24	36557	-12996	47.49	2049.26	43.15	Si
SLV 3	143750	0.24	44551	-15838	47.49	2264.22	47.68	Si
SLV 4	143750	0.24	44551	-15838	47.49	2264.22	47.68	Si
SLV 14	143750	0.24	46286	-16455	47.49	2299.83	48.43	Si
SLV 13	143750	0.24	46286	-16455	47.49	2299.83	48.43	Si

Verifica dei meccanismi locali di collasso con analisi cinematica lineare

forza di aggancio al piano = 0 quota mezzeria = -0.68 Wa = 0.08 Ta = 0.0271

Comb.	N top	N base	V orto	α0	M*	e*	a0*	aLim	Verifica
SLV 8	-7422	-11838	549	0.026	891.1	0.955	0.39233	3.33245	No
SLV 7	-7422	-11838	549	0.026	891.1	0.955	0.39233	3.33245	No
SLV 12	-8592	-6749	571	0.031	1010	0.96	0.46184	3.33245	No
SLV 11	-8592	-6749	571	0.031	1010	0.96	0.46184	3.33245	No
SLV 5	-19479	-23285	-656	0.055	2118.7	0.98	0.81	3.33245	No
SLV 6	-19479	-23285	-656	0.055	2118.7	0.98	0.81	3.33245	No
SLV 9	-20649	-18196	-633	0.057	2237.9	0.981	0.84791	3.33245	No
SLV 10	-20649	-18196	-633	0.057	2237.9	0.981	0.84791	3.33245	No
SLV 2	-13894	-25216	-261	0.071	1549.8	0.973	1.0534	3.47592	No
SLV 1	-13894	-25216	-261	0.071	1549.8	0.973	1.0534	3.47592	No

Tabella dei coefficienti di sicurezza minimi

Stato limite	Coeff.s.	Comb.	Verifica
PF_SLU	0.45	SLU 84	No
V_SLU	3.805	SLU 84	Si
PF_SLV	1.411	SLV 3	Si
V_SLV	0.953	SLV 13	No
PFFP_SLV	36.36	SLV 11	Si
R_SLV	0.118	SLV 7	No

Maschio 48

Verifiche condotte secondo D.M. 17-01-18 (N.T.C.)

Dati geometrici

X ini.	Y ini.	X fin.	Y fin.	Quota i.	Quota.s	l	Sp.	h netta	h ini.	h fin.	a	a.s.,sx	a.s.,dx
-5.177	2.271	-5.177	6.041	L1	L3	3.77	0.3	2.7	2.7	2.7			

Caratteristiche del materiale

(Circolare 7 21-01-19 C8.5.I) Muratura in mattoni pieni e malta di calce LC2_Corti

fb	fk	fvk0	fmedio	τ0	fv0	μ	ϕ	fv,lim	E	G	FC
600000			345000	9000	20000	0.58	0.77	32500	320000000	128000000	1.2

Verifica a pressoflessione nel piano secondo D.M. 17-01-18 NTC §7.8.2.2.1 in combinazioni non sismiche, γM = 3

Comb.	Quota	N	M	σ0	Mu	c.s.	Verifica
SLU 55	-2.03	-37089	3663.22	32795	41763.65	11.401	Si
SLU 55	0.07	-31654	3030.45	27989	39163.54	12.923	Si
SLU 68	-2.03	-37053	3625.48	32763	41750.64	11.516	Si
SLU 68	0.07	-31618	2959.76	27958	39142.65	13.225	Si
SLU 73	-2.03	-39861	3836.62	35246	42624.3	11.11	Si
SLU 73	0.07	-34426	3244.25	30440	40640.69	12.527	Si
SLU 75	-2.03	-40699	3809.67	35987	42822.61	11.241	Si
SLU 75	0.07	-35264	3172.48	31181	41025.39	12.932	Si
SLU 80	-2.03	-40877	3944.55	36144	42861.07	10.866	Si
SLU 80	0.07	-35442	3174.98	31339	41103.48	12.946	Si
SLU 84	-2.03	-41819	3954.07	36978	43042.85	10.886	Si
SLU 84	0.07	-36384	3286.3	32172	41494.85	12.627	Si
SLU 78	-2.03	-41155	3951.36	36390	42918.51	10.862	Si
SLU 78	0.07	-35720	3191.05	31585	41222.79	12.918	Si
SLU 82	-2.03	-41363	3812.38	36574	42959.35	11.268	Si
SLU 82	0.07	-35928	3267.72	31768	41309.85	12.642	Si
SLU 59	-2.03	-37649	3629.46	33290	41962.83	11.562	Si
SLU 59	0.07	-32214	2942.61	28484	39487.24	13.419	Si
SLU 76	-2.03	-40317	3978.32	35649	42735.86	10.742	Si
SLU 76	0.07	-34882	3262.82	30844	40853.74	12.521	Si

Verifica a pressoflessione nel piano secondo D.M. 17-01-18 NTC §7.8.2.2.1 in combinazioni sismiche, γM = 2

Comb.	Quota	N	M	σ0	Mu	c.s.	Verifica
SLV 4	-2.03	-30579	23002.85	27039	44883.63	1.951	Si
SLV 4	0.07	-28937	4973.69	25587	43121.77	8.67	Si
SLV 11	-2.03	-25477	43374.46	22527	39167.7	0.903	No, M>Mu
SLV 11	0.07	-21526	7474.29	19034	34253.97	4.583	Si
SLV 10	-2.03	-30055	-43211.12	26575	44329.22	1.026	Si
SLV 10	0.07	-24284	-3984.54	21473	37729.59	9.469	Si
SLV 3	-2.03	-30579	23002.85	27039	44883.63	1.951	Si
SLV 3	0.07	-28937	4973.69	25587	43121.77	8.67	Si
SLV 12	-2.03	-25477	43374.46	22527	39167.7	0.903	No, M>Mu
SLV 12	0.07	-21526	7474.29	19034	34253.97	4.583	Si
SLV 8	-2.03	-27092	47959.08	23955	41054.15	0.856	No, M>Mu
SLV 8	0.07	-24501	8171.21	21664	37993.65	4.65	Si
SLV 5	-2.03	-31670	-38626.5	28004	46013.93	1.191	Si
SLV 5	0.07	-27259	-3287.62	24103	41245.4	12.546	Si
SLV 6	-2.03	-31670	-38626.5	28004	46013.93	1.191	Si
SLV 6	0.07	-27259	-3287.62	24103	41245.4	12.546	Si
SLV 7	-2.03	-27092	47959.08	23955	41054.15	0.856	No, M>Mu
SLV 7	0.07	-24501	8171.21	21664	37993.65	4.65	Si
SLV 9	-2.03	-30055	-43211.12	26575	44329.22	1.026	Si
SLV 9	0.07	-24284	-3984.54	21473	37729.59	9.469	Si

Verifica a taglio nel piano secondo D.M. 17-01-18 (N.T.C.) §7.8.2.2.2 con rottura per scorrimento in combinazioni non sismiche, γM = 3

Comb.	Quota	N	V par	M	σ0	σN	l'	fvd	Vt scorr.	Vt fess.diag.	Vt,lim	c.s.	Verifica
SLU 36	-2.03	-34246	396	3404.45		30281	3.7698	9593	10849			27.41	Si
SLU 36	0.07	-30066	396	2688.61		26585	3.7698	9100	10292			26	Si
SLU 38	-2.03	-33968	400	3397.64		30035	3.7698	9560	10812			27.01	Si
SLU 38	0.07	-29787	400	2672.55		26339	3.7698	9067	10255			25.62	Si
SLU 78	-2.03	-41155	434	3951.36		36390	3.7698	10408	11770			27.15	Si
SLU 78	0.07	-35720	434	3191.05		31585	3.7698	9767	11046			25.48	Si
SLU 28	-2.03	-30983	372	3051.62		27396	3.7698	9208	10414			27.98	Si
SLU 28	0.07	-26802	372	2385.55		23699	3.7698	8715	9857			26.48	Si
SLU 30	-2.03	-30705	377	3044.81		27150	3.7698	9176	10377			27.56	Si
SLU 30	0.07	-26524	377	2369.49		23453	3.7698	8683	9819			26.07	Si
SLU 59	-2.03	-37649	399	3629.46		33290	3.7698	9994	11303			28.36	Si
SLU 59	0.07	-32214	399	2942.61		28484	3.7698	9353	10578			26.54	Si
SLU 70	-2.03	-37891	410	3598.53		33504	3.7698	10023	11335			27.66	Si
SLU 70	0.07	-32456	410	2887.99		28699	3.7698	9382	10611			25.89	Si
SLU 72	-2.03	-37613	414	3591.72		33258	3.7698	9990	11298			27.27	Si
SLU 72	0.07	-32178	414	2871.92		28453	3.7698	9349	10573			25.52	Si
SLU 80	-2.03	-40877	438	3944.55		36144	3.7698	10375	11733			26.79	Si
SLU 80	0.07	-35442	438	3174.98		31339	3.7698	9734	11009			25.14	Si
SLU 76	-2.03	-40317	412	3978.32		35649	3.7698	10309	11659			28.28	Si
SLU 76	0.07	-34882	412	3262.82		30844	3.7698	9668	10934			26.52	Si

Verifica a taglio nel piano secondo D.M. 17-01-18 (N.T.C.) §7.8.2.2.2 con rottura per scorrimento in combinazioni sismiche, γM = 2

Comb.	Quota	N	V par	M	σ0	σN	l'	fvd	Vt scorr.	Vt fess.diag.	Vt,lim	c.s.	Verifica
SLV 11	-2.03	-25477	17841	43374.46		155205	0.5472	16250	2667			0.15	No, Vu<V
SLV 11	0.07	-21526	18810	7474.29		19034	3.7698	12140	13730			0.73	No, Vu<V
SLV 6	-2.03	-31670	-17464	-38626.5		52896	1.9958	16250	9729			0.56	No, Vu<V
SLV 6	0.07	-27259	-18433	-3287.62		24103	3.7698	13154	14876			0.81	No, Vu<V
SLV 12	-2.03	-25477	17841	43374.46		155205	0.5472	16250	2667			0.15	No, Vu<V
SLV 12	0.07	-21526	18810	7474.29		19034	3.7698	12140	13730			0.73	No, Vu<V
SLV 4	-2.03	-30579	8645	23002.85		29997	3.398	14333	14611			1.69	Si
SLV 4	0.07	-28937	5742	4973.69		25587	3.7698	13451	15212			2.65	Si
SLV 9	-2.03	-30055	-19204	-43211.12		74681	1.3415	16250	6540			0.34	No, Vu<V
SLV 9	0.07	-24284	-18415	-3984.54		21473	3.7698	12628	14281			0.78	No, Vu<V
SLV 3	-2.03	-30579	8645	23002.85		29997	3.398	14333	14611			1.69	Si
SLV 3	0.07	-28937	5742	4973.69		25587	3.7698	13451	15212			2.65	Si
SLV 5	-2.03	-31670	-17464	-38626.5		52896	1.9958	16250	9729			0.56	No, Vu<V
SLV 5	0.07	-27259	-18433	-3287.62		24103	3.7698	13154	14876			0.81	No, Vu<V
SLV 7	-2.03	-27092	19581	47959.08		262502	0.344	16250	1677			0.09	No, Vu<V
SLV 7	0.07	-24501	18792	8171.21		21664	3.7698	12666	14325			0.76	No, Vu<V
SLV 10	-2.03	-30055	-19204	-43211.12		74681	1.3415	16250	6540			0.34	No, Vu<V
SLV 10	0.07	-24284	-18415	-3984.54		21473	3.7698	12628	14281			0.78	No, Vu<V
SLV 8	-2.03	-27092	19581	47959.08		262502	0.344	16250	1677			0.09	No, Vu<V
SLV 8	0.07	-24501	18792	8171.21		21664	3.7698	12666	14325			0.76	No, Vu<V

Verifica a pressoflessione fuori piano D.M. 17-01-18 (N.T.C.)

quota -0.68 Wa 0.05 denominatore 8 γM = 2

Comb.	fd	Sa	σ0	N	M	Mc	Coeff.s.	Verifica
SLV 15	143750	0.24	16771	-18966	151.07	2454.48	16.25	Si
SLV 16	143750	0.24	16771	-18966	151.07	2454.48	16.25	Si
SLV 14	143750	0.24	18340	-20742	151.07	2644.28	17.5	Si
SLV 13	143750	0.24	18340	-20742	151.07	2644.28	17.5	Si
SLV 11	143750	0.24	18576	-21009	151.07	2672.2	17.69	Si
SLV 12	143750	0.24	18576	-21009	151.07	2672.2	17.69	Si
SLV 7	143750	0.24	21694	-24535	151.07	3026.78	20.04	Si
SLV 8	143750	0.24	21694	-24535	151.07	3026.78	20.04	Si
SLV 10	143750	0.24	23809	-26927	151.07	3251.99	21.53	Si
SLV 9	143750	0.24	23809	-26927	151.07	3251.99	21.53	Si

Verifica dei meccanismi locali di collasso con analisi cinematica lineare

forza di aggancio al piano = 0 quota mezzeria = -0.68 Wa = 0.05 Ta = 0.0406

Comb.	N top	N base	V orto	α0	M*	e*	a0*	aLim	Verifica
SLV 16	-14637	-25195	160	0.055	1924.3	0.938	0.85472	4.36108	No
SLV 15	-14637	-25195	160	0.055	1924.3	0.938	0.85472	4.36108	No
SLV 3	-25906	-30579	111	0.057	3068	0.958	0.86461	4.36108	No
SLV 4	-25906	-30579	111	0.057	3068	0.958	0.86461	4.36108	No
SLV 2	-28270	-31952	73	0.058	3308.4	0.961	0.87883	4.36108	No
SLV 1	-28270	-31952	73	0.058	3308.4	0.961	0.87883	4.36108	No
SLV 14	-17000	-26568	122	0.057	2163.6	0.943	0.87955	4.36108	No
SLV 13	-17000	-26568	122	0.057	2163.6	0.943	0.87955	4.36108	No
SLV 12	-15823	-25477	187	0.054	2044.4	0.941	0.83005	4.07946	No
SLV 11	-15823	-25477	187	0.054	2044.4	0.941	0.83005	4.07946	No

Tabella dei coefficienti di sicurezza minimi

Stato limite	Coeff.s.	Comb.	Verifica
PF_SLU	10.742	SLU 76	Si
V_SLU	25.136	SLU 80	Si
PF_SLV	0.856	SLV 7	No
V_SLV	0.086	SLV 7	No
PFFP_SLV	16.247	SLV 15	Si
R_SLV	0.196	SLV 15	No

Maschio 49

Verifiche condotte secondo D.M. 17-01-18 (N.T.C.)

Dati geometrici

X ini.	Y ini.	X fin.	Y fin.	Quota i.	Quota.s	l	Sp.	h netta	h ini.	h fin.	a	a.s.,sx	a.s.,dx
-5.102	6.041	-5.102	6.708	L1	L3	0.667	0.45	2.7	2.7	2.7			

Caratteristiche del materiale

(Circolare 7 21-01-19 C8.5.I) Muratura in mattoni pieni e malta di calce LC2_Corti

fb	fk	fvk0	fmedio	τ0	fv0	μ	ϕ	fv,lim	E	G	FC
600000			345000	9000	20000	0.58	0.77	32500	320000000	128000000	1.2

Verifica a pressoflessione nel piano secondo D.M. 17-01-18 NTC §7.8.2.2.1 in combinazioni non sismiche, γM = 3

Comb.	Quota	N	M	σ0	Mu	c.s.	Verifica
SLU 78	-2.03	-19352	218.85	64475	1345.62	6.149	Si
SLU 78	0.67	-17456	-196.4	58157	1665.29	8.479	Si
SLU 80	-2.03	-19220	217.42	64034	1371.1	6.306	Si
SLU 80	0.67	-17324	-194.74	57716	1683.93	8.647	Si
SLU 84	-2.03	-19677	220	65558	1280.96	5.823	Si
SLU 84	0.67	-17781	-201.59	59240	1617.45	8.023	Si
SLU 82	-2.03	-19417	215.3	64691	1332.96	6.191	Si
SLU 82	0.67	-17521	-200.62	58373	1655.98	8.255	Si
SLU 81	-2.03	-19380	210.62	64568	1340.16	6.363	Si
SLU 81	0.67	-17484	-199.06	58250	1661.28	8.346	Si
SLU 76	-2.03	-18984	215.84	63249	1415.33	6.557	Si
SLU 76	0.67	-17088	-194.8	56931	1715.96	8.809	Si
SLU 75	-2.03	-19092	214.15	63608	1395.31	6.516	Si
SLU 75	0.67	-17196	-195.42	57290	1701.52	8.707	Si
SLU 79	-2.03	-19183	212.75	63912	1378.11	6.478	Si
SLU 79	0.67	-17287	-193.18	57594	1689.03	8.743	Si
SLU 83	-2.03	-19641	215.32	65436	1288.42	5.984	Si
SLU 83	0.67	-17744	-200.04	59118	1623.01	8.114	Si
SLU 77	-2.03	-19315	214.18	64352	1352.76	6.316	Si
SLU 77	0.67	-17419	-194.84	58034	1670.53	8.574	Si

Verifica a pressoflessione nel piano secondo D.M. 17-01-18 NTC §7.8.2.2.1 in combinazioni sismiche, γM = 2

Comb.	Quota	N	M	σ0	Mu	c.s.	Verifica
SLV 14	-2.03	-10255	-865.68	34165	2463.7	2.846	Si
SLV 14	0.67	-9624	859.53	32063	2367.34	2.754	Si
SLV 4	-2.03	-16129	1153.77	53735	3013.43	2.612	Si
SLV 4	0.67	-13842	-1127.72	46116	2874.02	2.549	Si
SLV 10	-2.03	-2337	-1088.64	0	0	0	No, e>l/2
SLV 10	0.67	-1958	764.13	0	0	0	No, e>l/2
SLV 9	-2.03	-2337	-1088.64	0	0	0	No, e>l/2
SLV 9	0.67	-1958	764.13	0	0	0	No, e>l/2
SLV 6	-2.03	-2127	-666.72	7086	668.18	1.002	Si
SLV 6	0.67	-1415	286.66	4716	453.82	1.583	Si
SLV 7	-2.03	-24046	1376.73	80112	2761.48	2.006	Si
SLV 7	0.67	-21507	-1032.32	71655	2966.42	2.874	Si

Comb.	Quota	N	M	σ0	Mu	c.s.	Verifica
SLV 13	-2.03	-10255	-865.68	34165	2463.7	2.846	Si
SLV 13	0.67	-9624	859.53	32063	2367.34	2.754	Si
SLV 8	-2.03	-24046	1376.73	80112	2761.48	2.006	Si
SLV 8	0.67	-21507	-1032.32	71655	2966.42	2.874	Si
SLV 3	-2.03	-16129	1153.77	53735	3013.43	2.612	Si
SLV 3	0.67	-13842	-1127.72	46116	2874.02	2.549	Si
SLV 5	-2.03	-2127	-666.72	7086	668.18	1.002	Si
SLV 5	0.67	-1415	286.66	4716	453.82	1.583	Si

Verifica a taglio nel piano secondo D.M. 17-01-18 (N.T.C.) §7.8.2.2.2 con rottura per scorrimento in combinazioni non sismiche, γM = 3

Comb.	Quota	N	V par	M	σ0	σN	l'	fvd	Vt scorr.	Vt fess.diag.	Vt,lim	c.s.	Verifica
SLU 80	-2.03	-19220	153	217.42		64034	0.667	10833	3252			21.3	Si
SLU 80	0.67	-17324	153	-194.74		57716	0.667	10833	3252			21.3	Si
SLU 76	-2.03	-18984	152	215.84		63249	0.667	10833	3252			21.38	Si
SLU 76	0.67	-17088	152	-194.8		56931	0.667	10833	3252			21.38	Si
SLU 82	-2.03	-19417	154	215.3		64691	0.667	10833	3252			21.11	Si
SLU 82	0.67	-17521	154	-200.62		58373	0.667	10833	3252			21.11	Si
SLU 81	-2.03	-19380	152	210.62		64568	0.667	10833	3252			21.43	Si
SLU 81	0.67	-17484	152	-199.06		58250	0.667	10833	3252			21.43	Si
SLU 78	-2.03	-19352	154	218.85		64475	0.667	10833	3252			21.14	Si
SLU 78	0.67	-17456	154	-196.4		58157	0.667	10833	3252			21.14	Si
SLU 75	-2.03	-19092	152	214.15		63608	0.667	10833	3252			21.44	Si
SLU 75	0.67	-17196	152	-195.42		57290	0.667	10833	3252			21.44	Si
SLU 77	-2.03	-19315	151	214.18		64352	0.667	10833	3252			21.46	Si
SLU 77	0.67	-17419	151	-194.84		58034	0.667	10833	3252			21.46	Si
SLU 83	-2.03	-19641	154	215.32		65436	0.667	10833	3252			21.14	Si
SLU 83	0.67	-17744	154	-200.04		59118	0.667	10833	3252			21.14	Si
SLU 79	-2.03	-19183	150	212.75		63912	0.667	10833	3252			21.63	Si
SLU 79	0.67	-17287	150	-193.18		57594	0.667	10833	3252			21.63	Si
SLU 84	-2.03	-19677	156	220		65558	0.667	10833	3252			20.82	Si
SLU 84	0.67	-17781	156	-201.59		59240	0.667	10833	3252			20.82	Si

Verifica a taglio nel piano secondo D.M. 17-01-18 (N.T.C.) §7.8.2.2.2 con rottura per scorrimento in combinazioni sismiche, γM = 2

Comb.	Quota	N	V par	M	σ0	σN	l'	fvd	Vt scorr.	Vt fess.diag.	Vt,lim	c.s.	Verifica
SLV 8	-2.03	-24046	775	1376.73		80112	0.667	16250	4877			6.29	Si
SLV 8	0.67	-21507	397	-1032.32		71655	0.667	16250	4877			12.3	Si
SLV 9	-2.03	-2337	-569	-1088.64		0	0	8333	0			0	No, Vu<V
SLV 9	0.67	-1958	-191	764.13		0	0	8333	0			0	No, Vu<V
SLV 3	-2.03	-16129	869	1153.77		53735	0.667	16250	4877			5.61	Si
SLV 3	0.67	-13842	629	-1127.72		46116	0.667	16250	4877			7.75	Si
SLV 7	-2.03	-24046	775	1376.73		80112	0.667	16250	4877			6.29	Si
SLV 7	0.67	-21507	397	-1032.32		71655	0.667	16250	4877			12.3	Si
SLV 5	-2.03	-2127	-197	-666.72		78666	0.0601	16250	439			2.23	Si
SLV 5	0.67	-1415	98	286.66		8005	0.3929	9934	1757			17.85	Si
SLV 14	-2.03	-10255	-663	-865.68		34165	0.667	15166	4552			6.86	Si
SLV 14	0.67	-9624	-423	859.53		32063	0.667	14746	4426			10.46	Si
SLV 4	-2.03	-16129	869	1153.77		53735	0.667	16250	4877			5.61	Si
SLV 4	0.67	-13842	629	-1127.72		46116	0.667	16250	4877			7.75	Si
SLV 6	-2.03	-2127	-197	-666.72		78666	0.0601	16250	439			2.23	Si
SLV 6	0.67	-1415	98	286.66		8005	0.3929	9934	1757			17.85	Si
SLV 13	-2.03	-10255	-663	-865.68		34165	0.667	15166	4552			6.86	Si
SLV 13	0.67	-9624	-423	859.53		32063	0.667	14746	4426			10.46	Si
SLV 10	-2.03	-2337	-569	-1088.64		0	0	8333	0			0	No, Vu<V
SLV 10	0.67	-1958	-191	764.13		0	0	8333	0			0	No, Vu<V

Verifica a pressoflessione fuori piano D.M. 17-01-18 (N.T.C.)

quota -0.68 Wa 0.08 denominatore 8 γM = 2

Comb.	fd	Sa	σ0	N	M	Mc	Coeff.s.	Verifica
SLV 10	143750	0.24	9691	-2909	40.09	602.57	15.03	Si
SLV 9	143750	0.24	9691	-2909	40.09	602.57	15.03	Si
SLV 6	143750	0.24	10818	-3247	40.09	665.89	16.61	Si
SLV 5	143750	0.24	10818	-3247	40.09	665.89	16.61	Si
SLV 14	143750	0.24	30019	-9010	40.09	1529.25	38.14	Si
SLV 13	143750	0.24	30019	-9010	40.09	1529.25	38.14	Si
SLV 1	143750	0.24	33775	-10138	40.09	1650.46	41.16	Si
SLV 2	143750	0.24	33775	-10138	40.09	1650.46	41.16	Si
SLV 16	143750	0.24	48570	-14578	40.09	1976.28	49.29	Si
SLV 15	143750	0.24	48570	-14578	40.09	1976.28	49.29	Si

Verifica dei meccanismi locali di collasso con analisi cinematica lineare

forza di aggancio al piano = 0 quota mezzeria = -0.68 Wa = 0.08 Ta = 0.0271

Comb.	N top	N base	V orto	α0	M*	e*	a0*	aLim	Verifica
SLV 15	-15651	-16830	-19	0.086	1707.8	0.979	1.27479	3.47592	No
SLV 16	-15651	-16830	-19	0.086	1707.8	0.979	1.27479	3.47592	No
SLV 3	-13842	-16129	23	0.086	1523.5	0.977	1.27838	3.47592	No
SLV 4	-13842	-16129	23	0.086	1523.5	0.977	1.27838	3.47592	No
SLV 13	-9624	-10255	-27	0.087	1093.9	0.968	1.29983	3.47592	No
SLV 14	-9624	-10255	-27	0.087	1093.9	0.968	1.29983	3.47592	No
SLV 7	-21507	-24046	18	0.085	2304.5	0.984	1.25891	3.33245	No
SLV 8	-21507	-24046	18	0.085	2304.5	0.984	1.25891	3.33245	No
SLV 12	-22050	-24256	5	0.086	2359.9	0.985	1.26594	3.33245	No
SLV 11	-22050	-24256	5	0.086	2359.9	0.985	1.26594	3.33245	No

Tabella dei coefficienti di sicurezza minimi

Stato limite	Coeff.s.	Comb.	Verifica
PF_SLU	5.823	SLU 84	Si
V_SLU	20.824	SLU 84	Si
PF_SLV	0	SLV 9	No
V_SLV	0	SLV 9	No

Stato limite	Coeff.s.	Comb.	Verifica
PFFP_SLV	15.029	SLV 9	Si
R_SLV	0.367	SLV 15	No

Maschio 50

Verifiche condotte secondo D.M. 17-01-18 (N.T.C.)

Dati geometrici

X ini.	Y ini.	X fin.	Y fin.	Quota i.	Quota.s	l	Sp.	h netta	h ini.	h fin.	a	a.s.,sx	a.s.,dx
-6.463	-3.284	-3.233	-3.284	L1	L3	3.23	0.45	2.7	2.7	2.7			

Caratteristiche del materiale

(Circolare 7 21-01-19 C8.5.I) Muratura in mattoni pieni e malta di calce LC2_Corti

fb	fk	fvk0	fmedio	τ0	fv0	μ	ϕ	fv,lim	E	G	FC
600000			345000	9000	20000	0.58	0.77	32500	320000000	128000000	1.2

Verifica a pressoflessione nel piano secondo D.M. 17-01-18 NTC §7.8.2.2.1 in combinazioni non sismiche, γM = 3

Comb.	Quota	N	M	σ0	Mu	c.s.	Verifica
SLU 77	-0.03	-62504	-4822.62	43002	47654.98	9.882	Si
SLU 77	0.37	-61205	-5917.65	42109	47749.01	8.069	Si
SLU 62	-0.03	-58591	-4559.78	40310	47798.82	10.483	Si
SLU 62	0.37	-57293	-5589.83	39417	47754.27	8.543	Si
SLU 69	-0.03	-56160	-4518.22	38638	47677.84	10.552	Si
SLU 69	0.37	-54862	-5520.81	37745	47547.19	8.612	Si
SLU 56	-0.03	-56878	-4508.95	39131	47730.32	10.586	Si
SLU 56	0.37	-55579	-5527.22	38238	47625.08	8.616	Si
SLU 74	-0.03	-61849	-4768.17	42552	47708.11	10.006	Si
SLU 74	0.37	-60551	-5841.47	41659	47778.96	8.179	Si
SLU 83	-0.03	-64217	-4873.46	44181	47460.5	9.739	Si
SLU 83	0.37	-62919	-5980.26	43288	47615.21	7.962	Si
SLU 71	-0.03	-55809	-4493.05	38396	47647.05	10.605	Si
SLU 71	0.37	-54511	-5489.52	37503	47503.97	8.654	Si
SLU 81	-0.03	-63563	-4819	43731	47544.21	9.866	Si
SLU 81	0.37	-62265	-5904.08	42838	47675.75	8.075	Si
SLU 79	-0.03	-62153	-4797.45	42761	47684.94	9.94	Si
SLU 79	0.37	-60854	-5886.37	41868	47766.53	8.115	Si
SLU 60	-0.03	-57937	-4505.33	39860	47782.12	10.606	Si
SLU 60	0.37	-56639	-5513.65	38967	47714.39	8.654	Si

Verifica a pressoflessione nel piano secondo D.M. 17-01-18 NTC §7.8.2.2.1 in combinazioni sismiche, γM = 2

Comb.	Quota	N	M	σ0	Mu	c.s.	Verifica
SLV 2	-0.03	-45726	-20902.48	31459	54834.01	2.623	Si
SLV 2	0.37	-44599	-12879.99	30684	53940.02	4.188	Si
SLV 3	-0.03	-30943	-17193.35	21288	41265.7	2.4	Si
SLV 3	0.37	-28005	-9302.01	19268	38096.74	4.096	Si
SLV 5	-0.03	-65889	-14269.58	45331	66932.45	4.691	Si
SLV 5	0.37	-67598	-12183.76	46507	67618.03	5.55	Si
SLV 12	-0.03	-19110	7488.67	13148	27542.3	3.678	Si
SLV 12	0.37	-15404	3917.6	10598	22719.78	5.799	Si
SLV 15	-0.03	-39273	14121.58	27020	49400.63	3.498	Si
SLV 15	0.37	-38402	4613.83	26421	48609.34	10.536	Si
SLV 11	-0.03	-19110	7488.67	13148	27542.3	3.678	Si
SLV 11	0.37	-15404	3917.6	10598	22719.78	5.799	Si
SLV 16	-0.03	-39273	14121.58	27020	49400.63	3.498	Si
SLV 16	0.37	-38402	4613.83	26421	48609.34	10.536	Si
SLV 6	-0.03	-65889	-14269.58	45331	66932.45	4.691	Si
SLV 6	0.37	-67598	-12183.76	46507	67618.03	5.55	Si
SLV 1	-0.03	-45726	-20902.48	31459	54834.01	2.623	Si
SLV 1	0.37	-44599	-12879.99	30684	53940.02	4.188	Si
SLV 4	-0.03	-30943	-17193.35	21288	41265.7	2.4	Si
SLV 4	0.37	-28005	-9302.01	19268	38096.74	4.096	Si

Verifica a taglio nel piano secondo D.M. 17-01-18 (N.T.C.) §7.8.2.2.2 con rottura per scorrimento in combinazioni non sismiche, γM = 3

Comb.	Quota	N	V par	M	σ0	σN	l'	fvd	Vt scorr.	Vt fess.diag.	Vt,lim	c.s.	Verifica
SLU 71	-0.03	-55809	2502	-4493.05		38396	3.23	10675	15516			6.2	Si
SLU 71	0.37	-54511	2502	-5489.52		37503	3.23	10556	15343			6.13	Si
SLU 81	-0.03	-63563	2724	-4819		43731	3.23	10833	15746			5.78	Si
SLU 81	0.37	-62265	2724	-5904.08		42838	3.23	10833	15746			5.78	Si
SLU 58	-0.03	-56527	2542	-4483.78		38890	3.23	10741	15612			6.14	Si
SLU 58	0.37	-55228	2542	-5495.93		37997	3.23	10622	15439			6.07	Si
SLU 69	-0.03	-56160	2518	-4518.22		38638	3.23	10707	15563			6.18	Si
SLU 69	0.37	-54862	2518	-5520.81		37745	3.23	10588	15390			6.11	Si
SLU 62	-0.03	-58591	2586	-4559.78		40310	3.23	10833	15746			6.09	Si
SLU 62	0.37	-57293	2586	-5589.83		39417	3.23	10811	15714			6.08	Si
SLU 79	-0.03	-62153	2734	-4797.45		42761	3.23	10833	15746			5.76	Si
SLU 79	0.37	-60854	2734	-5886.37		41868	3.23	10833	15746			5.76	Si
SLU 56	-0.03	-56878	2557	-4508.95		39131	3.23	10773	15659			6.12	Si
SLU 56	0.37	-55579	2557	-5527.22		38238	3.23	10654	15486			6.06	Si
SLU 83	-0.03	-64217	2778	-4873.46		44181	3.23	10833	15746			5.67	Si
SLU 83	0.37	-62919	2778	-5980.26		43288	3.23	10833	15746			5.67	Si
SLU 77	-0.03	-62504	2749	-4822.62		43002	3.23	10833	15746			5.73	Si
SLU 77	0.37	-61205	2749	-5917.65		42109	3.23	10833	15746			5.73	Si
SLU 74	-0.03	-61849	2695	-4768.17		42552	3.23	10833	15746			5.84	Si
SLU 74	0.37	-60551	2695	-5841.47		41659	3.23	10833	15746			5.84	Si

Verifica a taglio nel piano secondo D.M. 17-01-18 (N.T.C.) §7.8.2.2.2 con rottura per scorrimento in combinazioni sismiche, γM = 2

Comb.	Quota	N	V par	M	σ0	σN	l'	fvd	Vt scorr.	Vt fess.diag.	Vt,lim	c.s.	Verifica
SLV 4	-0.03	-30943	-23503	-17193.35		21636	3.178	12661	18106			0.77	No, Vu<V
SLV 4	0.37	-28005	-21155	-9302.01		19268	3.23	12187	17714			0.84	No, Vu<V
SLV 11	-0.03	-19110	8421	7488.67		13148	3.23	10963	15935			1.89	Si
SLV 11	0.37	-15404	15511	3917.6		10598	3.23	10453	15193			0.98	No, Vu<V
SLV 15	-0.03	-39273	26653	14121.58		27020	3.23	13737	19967			0.75	No, Vu<V
SLV 15	0.37	-38402	28595	4613.83		26421	3.23	13617	19793			0.69	No, Vu<V
SLV 12	-0.03	-19110	8421	7488.67		13148	3.23	10963	15935			1.89	Si
SLV 12	0.37	-15404	15511	3917.6		10598	3.23	10453	15193			0.98	No, Vu<V
SLV 16	-0.03	-39273	26653	14121.58		27020	3.23	13737	19967			0.75	No, Vu<V
SLV 16	0.37	-38402	28595	4613.83		26421	3.23	13617	19793			0.69	No, Vu<V
SLV 13	-0.03	-54057	27234	10412.44		37191	3.23	15771	22924			0.84	No, Vu<V
SLV 13	0.37	-54996	24885	1035.84		37837	3.23	15901	23112			0.93	No, Vu<V
SLV 1	-0.03	-45726	-22923	-20902.48		31459	3.23	14625	21258			0.93	No, Vu<V
SLV 1	0.37	-44599	-24865	-12879.99		30684	3.23	14470	21032			0.85	No, Vu<V
SLV 3	-0.03	-30943	-23503	-17193.35		21636	3.178	12661	18106			0.77	No, Vu<V
SLV 3	0.37	-28005	-21155	-9302.01		19268	3.23	12187	17714			0.84	No, Vu<V
SLV 14	-0.03	-54057	27234	10412.44		37191	3.23	15771	22924			0.84	No, Vu<V
SLV 14	0.37	-54996	24885	1035.84		37837	3.23	15901	23112			0.93	No, Vu<V
SLV 2	-0.03	-45726	-22923	-20902.48		31459	3.23	14625	21258			0.93	No, Vu<V
SLV 2	0.37	-44599	-24865	-12879.99		30684	3.23	14470	21032			0.85	No, Vu<V

Verifica a pressoflessione fuori piano D.M. 17-01-18 (N.T.C.)

quota -0.68 Wa 0.08 denominatore 8 γM = 2

Comb.	fd	Sa	σ0	N	M	Mc	Coeff.s.	Verifica
SLV 8	143750	0.24	10916	-15866	194.16	3251	16.74	Si
SLV 7	143750	0.24	10916	-15866	194.16	3251	16.74	Si
SLV 12	143750	0.24	12420	-18053	194.16	3648.95	18.79	Si
SLV 11	143750	0.24	12420	-18053	194.16	3648.95	18.79	Si
SLV 3	143750	0.24	18829	-27368	194.16	5208.95	26.83	Si
SLV 4	143750	0.24	18829	-27368	194.16	5208.95	26.83	Si
SLV 15	143750	0.24	23843	-34656	194.16	6275.97	32.32	Si
SLV 16	143750	0.24	23843	-34656	194.16	6275.97	32.32	Si
SLV 1	143750	0.24	27116	-39414	194.16	6900.02	35.54	Si
SLV 2	143750	0.24	27116	-39414	194.16	6900.02	35.54	Si

Verifica dei meccanismi locali di collasso con analisi cinematica lineare

forza di aggancio al piano = 0 quota mezzeria = -0.68 Wa = 0.08 Ta = 0.0271

Comb.	N top	N base	V orto	α0	M*	e*	a0*	aLim	Verifica
SLV 12	-12428	-18879	955	0.042	1829.3	0.921	0.66237	3.33245	No
SLV 11	-12428	-18879	955	0.042	1829.3	0.921	0.66237	3.33245	No
SLV 7	-9438	-15495	816	0.043	1530.5	0.91	0.68827	3.33245	No
SLV 8	-9438	-15495	816	0.043	1530.5	0.91	0.68827	3.33245	No
SLV 6	-60282	-57800	-2368	0.051	6690.1	0.975	0.75814	3.33245	No
SLV 5	-60282	-57800	-2368	0.051	6690.1	0.975	0.75814	3.33245	No
SLV 9	-63271	-61183	-2230	0.054	6994.6	0.976	0.80984	3.33245	No
SLV 10	-63271	-61183	-2230	0.054	6994.6	0.976	0.80984	3.33245	No
SLV 2	-38998	-39046	-1415	0.057	4523.2	0.963	0.85972	3.47592	No
SLV 1	-38998	-39046	-1415	0.057	4523.2	0.963	0.85972	3.47592	No

Tabella dei coefficienti di sicurezza minimi

Stato limite	Coeff.s.	Comb.	Verifica
PF_SLU	7.962	SLU 83	Si
V_SLU	5.668	SLU 83	Si
PF_SLV	2.4	SLV 3	Si
V_SLV	0.692	SLV 15	No
PFFP_SLV	16.744	SLV 7	Si
R_SLV	0.199	SLV 11	No

Maschio 51

Verifiche condotte secondo D.M. 17-01-18 (N.T.C.)

Dati geometrici

X ini.	Y ini.	X fin.	Y fin.	Quota i.	Quota.s	l	Sp.	h netta	h ini.	h fin.	a	a.s.,sx	a.s.,dx
-2.233	-3.284	0.102	-3.284	L1	L3	2.335	0.45	2.7	2.7	2.7			

Caratteristiche del materiale

(Circolare 7 21-01-19 C8.5.I) Muratura in mattoni pieni e malta di calce LC2_Corti

fb	fk	fvk0	fmedio	τ0	fv0	μ	ϕ	fv,lim	E	G	FC
600000			345000	9000	20000	0.58	0.77	32500	320000000	128000000	1.2

Verifica a pressoflessione nel piano secondo D.M. 17-01-18 NTC §7.8.2.2.1 in combinazioni non sismiche, γM = 3

Comb.	Quota	N	M	σ0	Mu	c.s.	Verifica
SLU 82	-0.03	-64578	4691.54	61459	18510.64	3.946	Si
SLU 82	0.37	-63634	6079.47	60561	19059.32	3.135	Si
SLU 83	-0.03	-64133	5451.81	61036	18772.16	3.443	Si
SLU 83	0.37	-63190	7526.05	60138	19309.39	2.566	Si
SLU 80	-0.03	-63455	4684.73	60390	19160.79	4.09	Si
SLU 80	0.37	-62511	6058.59	59492	19680.55	3.248	Si
SLU 84	-0.03	-65313	4780.59	62159	18066.39	3.779	Si
SLU 84	0.37	-64369	6196.6	61261	18633.99	3.007	Si
SLU 81	-0.03	-63398	5362.76	60336	19192.75	3.579	Si
SLU 81	0.37	-62454	7408.92	59438	19711.05	2.66	Si
SLU 62	-0.03	-58589	5014.6	55760	21580.07	4.303	Si
SLU 62	0.37	-57646	6918.73	54861	21974.56	3.176	Si

Comb.	Quota	N	M	σ0	Mu	c.s.	Verifica
SLU 79	-0.03	-62275	5355.95	59267	19806.75	3.698	Si
SLU 79	0.37	-61331	7388.05	58369	20296.13	2.747	Si
SLU 78	-0.03	-63879	4734.88	60794	18919.3	3.996	Si
SLU 78	0.37	-62935	6127.78	59896	19449.99	3.174	Si
SLU 74	-0.03	-61964	5317.04	58971	19970.74	3.756	Si
SLU 74	0.37	-61020	7340.1	58073	20452.12	2.786	Si
SLU 77	-0.03	-62699	5406.1	59671	19578.91	3.622	Si
SLU 77	0.37	-61755	7457.23	58773	20079.22	2.693	Si

Verifica a pressoflessione nel piano secondo D.M. 17-01-18 NTC §7.8.2.2.1 in combinazioni sismiche, γM = 2

Comb.	Quota	N	M	σ0	Mu	c.s.	Verifica
SLV 16	-0.03	-59882	12586.31	56990	37304.31	2.964	Si
SLV 16	0.37	-61107	10006.5	58156	37386.74	3.736	Si
SLV 4	-0.03	-13542	-6128.25	12888	14143.04	2.308	Si
SLV 4	0.37	-10475	-916.59	9969	11232.12	12.254	Si
SLV 9	-0.03	-69299	7982.82	65952	37236.4	4.665	Si
SLV 9	0.37	-69867	8508.86	66493	37180.76	4.37	Si
SLV 14	-0.03	-71714	13484.74	68251	36959.16	2.741	Si
SLV 14	0.37	-73329	11079.78	69788	36714.56	3.314	Si
SLV 13	-0.03	-71714	13484.74	68251	36959.16	2.741	Si
SLV 13	0.37	-73329	11079.78	69788	36714.56	3.314	Si
SLV 2	-0.03	-25374	-5229.82	24149	23769.74	4.545	Si
SLV 2	0.37	-22697	156.69	21601	21814.45	139.22	Si
SLV 15	-0.03	-59882	12586.31	56990	37304.31	2.964	Si
SLV 15	0.37	-61107	10006.5	58156	37386.74	3.736	Si
SLV 3	-0.03	-13542	-6128.25	12888	14143.04	2.308	Si
SLV 3	0.37	-10475	-916.59	9969	11232.12	12.254	Si
SLV 1	-0.03	-25374	-5229.82	24149	23769.74	4.545	Si
SLV 1	0.37	-22697	156.69	21601	21814.45	139.22	Si
SLV 10	-0.03	-69299	7982.82	65952	37236.4	4.665	Si
SLV 10	0.37	-69867	8508.86	66493	37180.76	4.37	Si

Verifica a taglio nel piano secondo D.M. 17-01-18 (N.T.C.) §7.8.2.2.2 con rottura per scorrimento in combinazioni non sismiche, γM = 3

Comb.	Quota	N	V par	M	σ0	σN	I'	fvd	Vt scorr.	Vt fess.diag.	Vt,lim	c.s.	Verifica
SLU 62	-0.03	-58589	-4756	5014.6		55760	2.335	10833	11383			2.39	Si
SLU 62	0.37	-57646	-4756	6918.73		54861	2.335	10833	11383			2.39	Si
SLU 56	-0.03	-57155	-4698	4968.89		54395	2.335	10833	11383			2.42	Si
SLU 56	0.37	-56211	-4698	6849.91		53496	2.335	10833	11383			2.42	Si
SLU 83	-0.03	-64133	-5182	5451.81		61036	2.335	10833	11383			2.2	Si
SLU 83	0.37	-63190	-5182	7526.05		60138	2.335	10833	11383			2.2	Si
SLU 74	-0.03	-61964	-5054	5317.04		58971	2.335	10833	11383			2.25	Si
SLU 74	0.37	-61020	-5054	7340.1		58073	2.335	10833	11383			2.25	Si
SLU 69	-0.03	-56648	-4714	4974.63		53912	2.335	10833	11383			2.41	Si
SLU 69	0.37	-55704	-4714	6861.92		53013	2.335	10833	11383			2.41	Si
SLU 60	-0.03	-57854	-4686	4925.55		55060	2.335	10833	11383			2.43	Si
SLU 60	0.37	-56910	-4686	6801.6		54162	2.335	10833	11383			2.43	Si
SLU 71	-0.03	-56224	-4667	4924.48		53508	2.335	10833	11383			2.44	Si
SLU 71	0.37	-55280	-4667	6792.74		52610	2.335	10833	11383			2.44	Si
SLU 79	-0.03	-62275	-5076	5355.95		59267	2.335	10833	11383			2.24	Si
SLU 79	0.37	-61331	-5076	7388.05		58369	2.335	10833	11383			2.24	Si
SLU 77	-0.03	-62699	-5124	5406.1		59671	2.335	10833	11383			2.22	Si
SLU 77	0.37	-61755	-5124	7457.23		58773	2.335	10833	11383			2.22	Si
SLU 81	-0.03	-63398	-5111	5362.76		60336	2.335	10833	11383			2.23	Si
SLU 81	0.37	-62454	-5111	7408.92		59438	2.335	10833	11383			2.23	Si

Verifica a taglio nel piano secondo D.M. 17-01-18 (N.T.C.) §7.8.2.2.2 con rottura per scorrimento in combinazioni sismiche, γM = 2

Comb.	Quota	N	V par	M	σ0	σN	I'	fvd	Vt scorr.	Vt fess.diag.	Vt,lim	c.s.	Verifica
SLV 8	-0.03	-15957	-4887	-626.32		15186	2.335	11371	11948			2.44	Si
SLV 8	0.37	-13938	-5595	1654.34		13264	2.335	10986	11544			2.06	Si
SLV 4	-0.03	-13542	-11724	-6128.25		14030	2.1449	11139	10752			0.92	No, Vu<V
SLV 4	0.37	-10475	-12011	-916.59		9969	2.335	10327	10851			0.9	No, Vu<V
SLV 15	-0.03	-59882	5428	12586.31		56990	2.335	16250	17075			3.15	Si
SLV 15	0.37	-61107	5305	10006.5		58156	2.335	16250	17075			3.22	Si
SLV 7	-0.03	-15957	-4887	-626.32		15186	2.335	11371	11948			2.44	Si
SLV 7	0.37	-13938	-5595	1654.34		13264	2.335	10986	11544			2.06	Si
SLV 1	-0.03	-25374	-12438	-5229.82		24149	2.335	13163	13831			1.11	Si
SLV 1	0.37	-22697	-12316	156.69		21601	2.335	12654	13296			1.08	Si
SLV 3	-0.03	-13542	-11724	-6128.25		14030	2.1449	11139	10752			0.92	No, Vu<V
SLV 3	0.37	-10475	-12011	-916.59		9969	2.335	10327	10851			0.9	No, Vu<V
SLV 2	-0.03	-25374	-12438	-5229.82		24149	2.335	13163	13831			1.11	Si
SLV 2	0.37	-22697	-12316	156.69		21601	2.335	12654	13296			1.08	Si
SLV 16	-0.03	-59882	5428	12586.31		56990	2.335	16250	17075			3.15	Si
SLV 16	0.37	-61107	5305	10006.5		58156	2.335	16250	17075			3.22	Si
SLV 6	-0.03	-55398	-7269	2368.45		52722	2.335	16250	17075			2.35	Si
SLV 6	0.37	-54677	-6610	5231.93		52037	2.335	16250	17075			2.58	Si
SLV 5	-0.03	-55398	-7269	2368.45		52722	2.335	16250	17075			2.35	Si
SLV 5	0.37	-54677	-6610	5231.93		52037	2.335	16250	17075			2.58	Si

Verifica a pressoflessione fuori piano D.M. 17-01-18 (N.T.C.)

quota -0.68 Wa 0.08 denominatore 8 γM = 2

Comb.	fd	Sa	σ0	N	M	Mc	Coeff.s.	Verifica
SLV 3	143750	0.24	8764	-9209	140.36	1923.36	13.7	Si
SLV 4	143750	0.24	8764	-9209	140.36	1923.36	13.7	Si
SLV 8	143750	0.24	14488	-15223	140.36	3019.06	21.51	Si
SLV 7	143750	0.24	14488	-15223	140.36	3019.06	21.51	Si
SLV 1	143750	0.24	18786	-19739	140.36	3758.49	26.78	Si
SLV 2	143750	0.24	18786	-19739	140.36	3758.49	26.78	Si
SLV 11	143750	0.24	29416	-30909	140.36	5280.21	37.62	Si
SLV 12	143750	0.24	29416	-30909	140.36	5280.21	37.62	Si
SLV 6	143750	0.24	47894	-50325	140.36	6884.74	49.05	Si

Comb.	fd	Sa	σ0	N	M	Mc	Coeff.s.	Verifica
SLV 5	143750	0.24	47894	-50325	140.36	6884.74	49.05	Si

Verifica dei meccanismi locali di collasso con analisi cinematica lineare

forza di aggancio al piano = 0 quota mezzeria = -0.68 Wa = 0.08 Ta = 0.0271

Comb.	N top	N base	V orto	α0	M*	e*	a0*	aLim	Verifica
SLV 7	-12379	-15773	491	0.065	1664.5	0.934	1.00747	3.33245	No
SLV 8	-12379	-15773	491	0.065	1664.5	0.934	1.00747	3.33245	No
SLV 2	-21350	-17895	-524	0.07	2574.1	0.954	1.07035	3.47592	No
SLV 1	-21350	-17895	-524	0.07	2574.1	0.954	1.07035	3.47592	No
SLV 11	-26511	-33213	607	0.07	3098.9	0.961	1.05482	3.33245	No
SLV 12	-26511	-33213	607	0.07	3098.9	0.961	1.05482	3.33245	No
SLV 6	-51545	-50340	-863	0.071	5647.9	0.978	1.05984	3.33245	No
SLV 5	-51545	-50340	-863	0.071	5647.9	0.978	1.05984	3.33245	No
SLV 9	-65676	-67779	-747	0.076	7087.7	0.982	1.11718	3.33245	No
SLV 10	-65676	-67779	-747	0.076	7087.7	0.982	1.11718	3.33245	No

Tabella dei coefficienti di sicurezza minimi

Stato limite	Coeff.s.	Comb.	Verifica
PF_SLU	2.566	SLU 83	Si
V_SLU	2.197	SLU 83	Si
PF_SLV	2.308	SLV 3	Si
V_SLV	0.903	SLV 3	No
PFFP_SLV	13.703	SLV 3	Si
R_SLV	0.302	SLV 7	No

Maschio 52

Verifiche condotte secondo D.M. 17-01-18 (N.T.C.)

Dati geometrici

X ini.	Y ini.	X fin.	Y fin.	Quota i.	Quota.s	l	Sp.	h netta	h ini.	h fin.	a	a.s.,sx	a.s.,dx
-5.105	5.816	-2.933	5.816	L1	L3	2.172	0.45	2.7	2.7	2.7			

Caratteristiche del materiale

(Circolare 7 21-01-19 C8.5.I) Muratura in mattoni pieni e malta di calce LC2_Corti

fb	fk	fvk0	fmedio	τ0	fv0	μ	ϕ	fv,lim	E	G	FC
600000			345000	9000	20000	0.58	0.77	32500	320000000	128000000	1.2

Verifica a pressoflessione nel piano secondo D.M. 17-01-18 NTC §7.8.2.2.1 in combinazioni non sismiche, γM = 3

Comb.	Quota	N	M	σ0	Mu	c.s.	Verifica
SLU 75	-0.03	-48180	3455.77	49298	20655.85	5.977	Si
SLU 75	0.37	-47302	2377.63	48400	20845.87	8.768	Si
SLU 83	-0.03	-49958	3659.57	51118	20206.45	5.522	Si
SLU 83	0.37	-49081	2543.91	50220	20439.04	8.034	Si
SLU 81	-0.03	-49198	3555.43	50340	20409.08	5.74	Si
SLU 81	0.37	-48320	2507.35	49442	20623.47	8.225	Si
SLU 77	-0.03	-48953	3585.22	50090	20470.99	5.71	Si
SLU 77	0.37	-48076	2429.19	49191	20679.52	8.513	Si
SLU 79	-0.03	-48640	3581.52	49768	20547.96	5.737	Si
SLU 79	0.37	-47762	2430.31	48870	20748.98	8.538	Si
SLU 84	-0.03	-49945	3634.26	51104	20210.16	5.561	Si
SLU 84	0.37	-49067	2528.91	50206	20442.43	8.084	Si
SLU 74	-0.03	-48193	3481.08	49312	20652.79	5.933	Si
SLU 74	0.37	-47316	2392.63	48414	20843.12	8.711	Si
SLU 80	-0.03	-48626	3556.21	49755	20551.19	5.779	Si
SLU 80	0.37	-47748	2415.31	48857	20751.88	8.592	Si
SLU 82	-0.03	-49185	3530.12	50326	20412.51	5.782	Si
SLU 82	0.37	-48307	2492.35	49428	20626.59	8.276	Si
SLU 78	-0.03	-48940	3559.91	50076	20474.33	5.751	Si
SLU 78	0.37	-48062	2414.19	49178	20682.54	8.567	Si

Verifica a pressoflessione nel piano secondo D.M. 17-01-18 NTC §7.8.2.2.1 in combinazioni sismiche, γM = 2

Comb.	Quota	N	M	σ0	Mu	c.s.	Verifica
SLV 10	-0.03	-20232	3607.19	20701	18247.69	5.059	Si
SLV 10	0.37	-19580	2162.04	20035	17775.97	8.222	Si
SLV 9	-0.03	-20232	3607.19	20701	18247.69	5.059	Si
SLV 9	0.37	-19580	2162.04	20035	17775.97	8.222	Si
SLV 2	-0.03	-18335	-3872.37	18761	16853.26	4.352	Si
SLV 2	0.37	-16443	2247.03	16824	15396.7	6.852	Si
SLV 13	-0.03	-38081	8181.01	38965	28165.51	3.443	Si
SLV 13	0.37	-38435	1348.22	39327	28303.64	20.993	Si
SLV 16	-0.03	-47457	8485.42	48558	31053.87	3.66	Si
SLV 16	0.37	-47999	920.29	49113	31171.99	33.872	Si
SLV 6	-0.03	-14308	-8.83	14640	13675.57	1000	Si
SLV 6	0.37	-12982	2431.69	13284	12565.04	5.167	Si
SLV 14	-0.03	-38081	8181.01	38965	28165.51	3.443	Si
SLV 14	0.37	-38435	1348.22	39327	28303.64	20.993	Si
SLV 15	-0.03	-47457	8485.42	48558	31053.87	3.66	Si
SLV 15	0.37	-47999	920.29	49113	31171.99	33.872	Si
SLV 1	-0.03	-18335	-3872.37	18761	16853.26	4.352	Si
SLV 1	0.37	-16443	2247.03	16824	15396.7	6.852	Si
SLV 5	-0.03	-14308	-8.83	14640	13675.57	1000	Si
SLV 5	0.37	-12982	2431.69	13284	12565.04	5.167	Si

Verifica a taglio nel piano secondo D.M. 17-01-18 (N.T.C.) §7.8.2.2.2 con rottura per scorrimento in combinazioni non sismiche, γM = 3

Comb.	Quota	N	V par	M	σ0	σN	l'	fvd	Vt scorr.	Vt fess.diag.	Vt,lim	c.s.	Verifica
SLU 71	-0.03	-43789	2686	3156.4		44806	2.1718	10833	10588			3.94	Si
SLU 71	0.37	-42912	2686	2079.94		43908	2.1718	10833	10588			3.94	Si
SLU 80	-0.03	-48626	2848	3556.21		49755	2.1718	10833	10588			3.72	Si
SLU 80	0.37	-47748	2848	2415.31		48857	2.1718	10833	10588			3.72	Si
SLU 79	-0.03	-48640	2873	3581.52		49768	2.1718	10833	10588			3.68	Si
SLU 79	0.37	-47762	2873	2430.31		48870	2.1718	10833	10588			3.68	Si
SLU 77	-0.03	-48953	2885	3585.22		50090	2.1718	10833	10588			3.67	Si
SLU 77	0.37	-48076	2885	2429.19		49191	2.1718	10833	10588			3.67	Si
SLU 69	-0.03	-44103	2698	3160.1		45127	2.1718	10833	10588			3.92	Si
SLU 69	0.37	-43225	2698	2078.82		44229	2.1718	10833	10588			3.92	Si
SLU 75	-0.03	-48180	2691	3455.77		49298	2.1718	10833	10588			3.93	Si
SLU 75	0.37	-47302	2691	2377.63		48400	2.1718	10833	10588			3.93	Si
SLU 83	-0.03	-49958	2784	3659.57		51118	2.1718	10833	10588			3.8	Si
SLU 83	0.37	-49081	2784	2543.91		50220	2.1718	10833	10588			3.8	Si
SLU 78	-0.03	-48940	2860	3559.91		50076	2.1718	10833	10588			3.7	Si
SLU 78	0.37	-48062	2860	2414.19		49178	2.1718	10833	10588			3.7	Si
SLU 84	-0.03	-49945	2759	3634.26		51104	2.1718	10833	10588			3.84	Si
SLU 84	0.37	-49067	2759	2528.91		50206	2.1718	10833	10588			3.84	Si
SLU 74	-0.03	-48193	2716	3481.08		49312	2.1718	10833	10588			3.9	Si
SLU 74	0.37	-47316	2716	2392.63		48414	2.1718	10833	10588			3.9	Si

Verifica a taglio nel piano secondo D.M. 17-01-18 (N.T.C.) §7.8.2.2.2 con rottura per scorrimento in combinazioni sismiche, γM = 2

Comb.	Quota	N	V par	M	σ0	σN	l'	fvd	Vt scorr.	Vt fess.diag.	Vt,lim	c.s.	Verifica
SLV 3	-0.03	-27711	-12040	-3567.96		28354	2.1718	14004	13686			1.14	Si
SLV 3	0.37	-26006	-10886	1819.1		26610	2.1718	13655	13346			1.23	Si
SLV 15	-0.03	-47457	18619	8485.42		48558	2.1718	16250	15881			0.85	No, Vu<V
SLV 15	0.37	-47999	18902	920.29		49113	2.1718	16250	15881			0.84	No, Vu<V
SLV 14	-0.03	-38081	15647	8181.01		38965	2.1718	16126	15761			1.01	Si
SLV 14	0.37	-38435	14493	1348.22		39327	2.1718	16199	15831			1.09	Si
SLV 1	-0.03	-18335	-15012	-3872.37		18761	2.1718	12085	11811			0.79	No, Vu<V
SLV 1	0.37	-16443	-15295	2247.03		16824	2.1718	11698	11433			0.75	No, Vu<V
SLV 6	-0.03	-14308	-7749	-8.83		14640	2.1718	11261	11006			1.42	Si
SLV 6	0.37	-12982	-10014	2431.69		13284	2.1718	10990	10741			1.07	Si
SLV 4	-0.03	-27711	-12040	-3567.96		28354	2.1718	14004	13686			1.14	Si
SLV 4	0.37	-26006	-10886	1819.1		26610	2.1718	13655	13346			1.23	Si
SLV 16	-0.03	-47457	18619	8485.42		48558	2.1718	16250	15881			0.85	No, Vu<V
SLV 16	0.37	-47999	18902	920.29		49113	2.1718	16250	15881			0.84	No, Vu<V
SLV 2	-0.03	-18335	-15012	-3872.37		18761	2.1718	12085	11811			0.79	No, Vu<V
SLV 2	0.37	-16443	-15295	2247.03		16824	2.1718	11698	11433			0.75	No, Vu<V
SLV 5	-0.03	-14308	-7749	-8.83		14640	2.1718	11261	11006			1.42	Si
SLV 5	0.37	-12982	-10014	2431.69		13284	2.1718	10990	10741			1.07	Si
SLV 13	-0.03	-38081	15647	8181.01		38965	2.1718	16126	15761			1.01	Si
SLV 13	0.37	-38435	14493	1348.22		39327	2.1718	16199	15831			1.09	Si

Verifica a pressoflessione fuori piano D.M. 17-01-18 (N.T.C.)

quota -0.68 Wa 0.08 denominatore 8 γM = 2

Comb.	fd	Sa	σ0	N	M	Mc	Coeff.s.	Verifica
SLV 6	143750	0.24	16085	-15720	130.55	3071.36	23.53	Si
SLV 5	143750	0.24	16085	-15720	130.55	3071.36	23.53	Si
SLV 9	143750	0.24	18099	-17688	130.55	3390.39	25.97	Si
SLV 10	143750	0.24	18099	-17688	130.55	3390.39	25.97	Si
SLV 1	143750	0.24	23430	-22899	130.55	4164.25	31.9	Si
SLV 2	143750	0.24	23430	-22899	130.55	4164.25	31.9	Si
SLV 14	143750	0.24	30145	-29461	130.55	4993.36	38.25	Si
SLV 13	143750	0.24	30145	-29461	130.55	4993.36	38.25	Si
SLV 3	143750	0.24	31741	-31021	130.55	5166.57	39.58	Si
SLV 4	143750	0.24	31741	-31021	130.55	5166.57	39.58	Si

Verifica dei meccanismi locali di collasso con analisi cinematica lineare

forza di aggancio al piano = 0 quota mezzeria = -0.68 Wa = 0.08 Ta = 0.0271

Comb.	N top	N base	V orto	α0	M*	e*	a0*	aLim	Verifica
SLV 14	-35872	-20548	-422	0.077	4023.7	0.972	1.1586	3.47592	No
SLV 13	-35872	-20548	-422	0.077	4023.7	0.972	1.1586	3.47592	No
SLV 16	-45116	-28271	-405	0.079	4965.2	0.977	1.17497	3.47592	No
SLV 15	-45116	-28271	-405	0.079	4965.2	0.977	1.17497	3.47592	No
SLV 4	-23784	-40440	280	0.08	2793.3	0.96	1.21388	3.47592	No
SLV 3	-23784	-40440	280	0.08	2793.3	0.96	1.21388	3.47592	No
SLV 2	-14540	-32717	262	0.08	1854.5	0.943	1.22559	3.47592	No
SLV 1	-14540	-32717	262	0.08	1854.5	0.943	1.22559	3.47592	No
SLV 11	-48433	-41539	-145	0.084	5303.2	0.978	1.25348	3.33245	No
SLV 12	-48433	-41539	-145	0.084	5303.2	0.978	1.25348	3.33245	No

Tabella dei coefficienti di sicurezza minimi

Stato limite	Coeff.s.	Comb.	Verifica
PF_SLU	5.522	SLU 83	Si
V_SLU	3.669	SLU 77	Si
PF_SLV	3.443	SLV 13	Si
V_SLV	0.747	SLV 1	No
PFFP_SLV	23.526	SLV 5	Si
R_SLV	0.333	SLV 13	No

Maschio 53

Verifiche condotte secondo D.M. 17-01-18 (N.T.C.)

Dati geometrici

X ini.	Y ini.	X fin.	Y fin.	Quota i.	Quota.s	l	Sp.	h netta	h ini.	h fin.	a	a.s.,sx	a.s.,dx
-1.933	5.816	-0.143	5.816	L1	L3	1.79	0.45	2.7	2.7	2.7			

Caratteristiche del materiale

(Circolare 7 21-01-19 C8.5.I) Muratura in mattoni pieni e malta di calce LC2_Corti

fb	fk	fvk0	fmedio	τ0	fv0	μ	ϕ	fv,lim	E	G	FC
600000			345000	9000	20000	0.58	0.77	32500	320000000	128000000	1.2

Verifica a pressoflessione nel piano secondo D.M. 17-01-18 NTC §7.8.2.2.1 in combinazioni non sismiche, γM = 3

Comb.	Quota	N	M	σ0	Mu	c.s.	Verifica
SLU 83	-0.03	-31864	-3822.24	39559	14668.87	3.838	Si
SLU 83	0.37	-31981	-3601.78	39703	14671.68	4.073	Si
SLU 73	-0.03	-29798	-3641.51	36993	14557.46	3.998	Si
SLU 73	0.37	-29885	-3401.56	37102	14564.53	4.282	Si
SLU 77	-0.03	-31335	-3665.04	38902	14651.44	3.998	Si
SLU 77	0.37	-31432	-3466.11	39022	14655.21	4.228	Si
SLU 81	-0.03	-31294	-3819.15	38851	14649.77	3.836	Si
SLU 81	0.37	-31387	-3577.25	38966	14653.48	4.096	Si
SLU 75	-0.03	-30623	-3666.45	38018	14615.95	3.986	Si
SLU 75	0.37	-30721	-3444.84	38139	14621.63	4.245	Si
SLU 78	-0.03	-31193	-3669.54	38726	14645.49	3.991	Si
SLU 78	0.37	-31315	-3469.37	38877	14650.63	4.223	Si
SLU 84	-0.03	-31723	-3826.75	39383	14664.96	3.832	Si
SLU 84	0.37	-31864	-3605.05	39558	14668.86	4.069	Si
SLU 76	-0.03	-30368	-3644.6	37701	14599.83	4.006	Si
SLU 76	0.37	-30479	-3426.1	37839	14607.07	4.263	Si
SLU 74	-0.03	-30765	-3661.94	38194	14624.12	3.994	Si
SLU 74	0.37	-30838	-3441.57	38284	14628.11	4.25	Si
SLU 82	-0.03	-31152	-3823.66	38675	14643.65	3.83	Si
SLU 82	0.37	-31270	-3580.51	38820	14648.76	4.091	Si

Verifica a pressoflessione nel piano secondo D.M. 17-01-18 NTC §7.8.2.2.1 in combinazioni sismiche, γM = 2

Comb.	Quota	N	M	σ0	Mu	c.s.	Verifica
SLV 10	-0.03	-8435	-897.99	10472	6902.1	7.686	Si
SLV 10	0.37	-9367	-2328.21	11629	7585.28	3.258	Si
SLV 6	-0.03	-3700	-3150.5	4594	3187.12	1.012	Si
SLV 6	0.37	-3526	-2320.53	4377	3042.31	1.311	Si
SLV 8	-0.03	-33708	-4114.38	41848	19836.11	4.821	Si
SLV 8	0.37	-32701	-2327.79	40598	19543.04	8.396	Si
SLV 4	-0.03	-17682	-6404.95	21951	12981.91	2.027	Si
SLV 4	0.37	-15675	-2316.28	19460	11794.78	5.092	Si
SLV 7	-0.03	-33708	-4114.38	41848	19836.11	4.821	Si
SLV 7	0.37	-32701	-2327.79	40598	19543.04	8.396	Si
SLV 2	-0.03	-8679	-6115.78	10775	7082.84	1.158	Si
SLV 2	0.37	-6922	-2314.1	8594	5759.77	2.489	Si
SLV 3	-0.03	-17682	-6404.95	21951	12981.91	2.027	Si
SLV 3	0.37	-15675	-2316.28	19460	11794.78	5.092	Si
SLV 1	-0.03	-8679	-6115.78	10775	7082.84	1.158	Si
SLV 1	0.37	-6922	-2314.1	8594	5759.77	2.489	Si
SLV 9	-0.03	-8435	-897.99	10472	6902.1	7.686	Si
SLV 9	0.37	-9367	-2328.21	11629	7585.28	3.258	Si
SLV 5	-0.03	-3700	-3150.5	4594	3187.12	1.012	Si
SLV 5	0.37	-3526	-2320.53	4377	3042.31	1.311	Si

Verifica a taglio nel piano secondo D.M. 17-01-18 (N.T.C.) §7.8.2.2.2 con rottura per scorrimento in combinazioni non sismiche, γM = 3

Comb.	Quota	N	V par	M	σ0	σN	l'	fvd	Vt scorr.	Vt fess.diag.	Vt,lim	c.s.	Verifica
SLU 80	-0.03	-31032	1379	-3644.69		38526	1.79	10692	8613			6.24	Si
SLU 80	0.37	-31151	1445	-3448.46		38673	1.79	10712	8628			5.97	Si
SLU 77	-0.03	-31335	1323	-3665.04		38902	1.79	10742	8653			6.54	Si
SLU 77	0.37	-31432	1390	-3466.11		39022	1.79	10758	8666			6.24	Si
SLU 38	-0.03	-26151	1277	-3086.46		32466	1.79	9884	7962			6.23	Si
SLU 38	0.37	-26332	1332	-2942.39		32690	1.79	9914	7986			6	Si
SLU 36	-0.03	-26312	1272	-3111.32		32666	1.79	9911	7983			6.27	Si
SLU 36	0.37	-26495	1327	-2963.3		32893	1.79	9941	8008			6.03	Si
SLU 79	-0.03	-31174	1328	-3640.18		38702	1.79	10716	8631			6.5	Si
SLU 79	0.37	-31268	1394	-3445.19		38819	1.79	10731	8644			6.2	Si
SLU 76	-0.03	-30368	1307	-3644.6		37701	1.79	10582	8524			6.52	Si
SLU 76	0.37	-30479	1370	-3426.1		37839	1.79	10601	8539			6.23	Si
SLU 84	-0.03	-31723	1365	-3826.75		39383	1.79	10807	8705			6.38	Si
SLU 84	0.37	-31864	1431	-3605.05		39558	1.79	10830	8723			6.1	Si
SLU 78	-0.03	-31193	1375	-3669.54		38726	1.79	10719	8634			6.28	Si
SLU 78	0.37	-31315	1440	-3469.37		38877	1.79	10739	8650			6.01	Si
SLU 37	-0.03	-26292	1225	-3081.96		32641	1.79	9908	7981			6.51	Si
SLU 37	0.37	-26449	1281	-2939.12		32836	1.79	9934	8001			6.25	Si
SLU 42	-0.03	-26841	1262	-3268.52		33323	1.79	9999	8054			6.38	Si
SLU 42	0.37	-27044	1318	-3098.98		33575	1.79	10032	8081			6.13	Si

Verifica a taglio nel piano secondo D.M. 17-01-18 (N.T.C.) §7.8.2.2.2 con rottura per scorrimento in combinazioni sismiche, γM = 2

Comb.	Quota	N	V par	M	σ0	σN	l'	fvd	Vt scorr.	Vt fess.diag.	Vt,lim	c.s.	Verifica
SLV 3	-0.03	-17682	-13222	-6404.95		24585	1.5983	13250	9530			0.72	No, Vu<V
SLV 3	0.37	-15675	-12655	-2316.28		19460	1.79	12225	9847			0.78	No, Vu<V
SLV 5	-0.03	-3700	970	-3150.5		62941	0.1306	16250	955			0.98	No, Vu<V
SLV 5	0.37	-3526	1196	-2320.53		11029	0.7104	10539	3369			2.82	Si
SLV 6	-0.03	-3700	970	-3150.5		62941	0.1306	16250	955			0.98	No, Vu<V
SLV 6	0.37	-3526	1196	-2320.53		11029	0.7104	10539	3369			2.82	Si
SLV 13	-0.03	-24461	14635	1392.58		30368	1.79	14407	11605			0.79	No, Vu<V
SLV 13	0.37	-26393	14158	-2339.73		32766	1.79	14887	11991			0.85	No, Vu<V
SLV 10	-0.03	-8435	8593	-897.99		10472	1.79	10428	8399			0.98	No, Vu<V
SLV 10	0.37	-9367	8502	-2328.21		11629	1.79	10659	8586			1.01	Si

Comb.	Quota	N	V par	M	σ0	σN	l'	fvd	Vt scorr.	Vt fess.diag.	Vt,lim	c.s.	Verifica
SLV 9	-0.03	-8435	8593	-897.99		10472	1.79	10428	8399			0.98	No, Vu<V
SLV 9	0.37	-9367	8502	-2328.21		11629	1.79	10659	8586			1.01	Si
SLV 4	-0.03	-17682	-13222	-6404.95		24585	1.5983	13250	9530			0.72	No, Vu<V
SLV 4	0.37	-15675	-12655	-2316.28		19460	1.79	12225	9847			0.78	No, Vu<V
SLV 1	-0.03	-8679	-10777	-6115.78		33776	0.571	15088	3877			0.36	No, Vu<V
SLV 1	0.37	-6922	-10196	-2314.1		9145	1.6821	10162	7692			0.75	No, Vu<V
SLV 2	-0.03	-8679	-10777	-6115.78		33776	0.571	15088	3877			0.36	No, Vu<V
SLV 2	0.37	-6922	-10196	-2314.1		9145	1.6821	10162	7692			0.75	No, Vu<V
SLV 14	-0.03	-24461	14635	1392.58		30368	1.79	14407	11605			0.79	No, Vu<V
SLV 14	0.37	-26393	14158	-2339.73		32766	1.79	14887	11991			0.85	No, Vu<V

Verifica a pressoflessione fuori piano D.M. 17-01-18 (N.T.C.)

quota -0.68 Wa 0.08 denominatore 8 γM = 2

Comb.	fd	Sa	σ0	N	M	Mc	Coeff.s.	Verifica
SLV 6	143750	0.24	1955	-1575	107.6	348.64	3.24	Si
SLV 5	143750	0.24	1955	-1575	107.6	348.64	3.24	Si
SLV 1	143750	0.24	6192	-4987	107.6	1065.26	9.9	Si
SLV 2	143750	0.24	6192	-4987	107.6	1065.26	9.9	Si
SLV 9	143750	0.24	9252	-7452	107.6	1549.81	14.4	Si
SLV 10	143750	0.24	9252	-7452	107.6	1549.81	14.4	Si
SLV 3	143750	0.24	17120	-13790	107.6	2667.99	24.8	Si
SLV 4	143750	0.24	17120	-13790	107.6	2667.99	24.8	Si
SLV 13	143750	0.24	30515	-24579	107.6	4149.21	38.56	Si
SLV 14	143750	0.24	30515	-24579	107.6	4149.21	38.56	Si

Verifica dei meccanismi locali di collasso con analisi cinematica lineare

forza di aggancio al piano = 0 quota mezzeria = -0.68 Wa = 0.08 Ta = 0.0271

Comb.	N top	N base	V orto	α0	M*	e*	a0*	aLim	Verifica
SLV 6	-2595	-317	-200	0.075	591.2	0.891	1.22819	3.33245	No
SLV 5	-2595	-317	-200	0.075	591.2	0.891	1.22819	3.33245	No
SLV 13	-21332	-29778	-96	0.086	2478.1	0.963	1.30108	3.47592	No
SLV 14	-21332	-29778	-96	0.086	2478.1	0.963	1.30108	3.47592	No
SLV 16	-29629	-39354	-31	0.088	3322.8	0.972	1.30879	3.47592	No
SLV 15	-29629	-39354	-31	0.088	3322.8	0.972	1.30879	3.47592	No
SLV 9	-6775	-8758	-187	0.081	1002.5	0.92	1.2732	3.33245	No
SLV 10	-6775	-8758	-187	0.081	1002.5	0.92	1.2732	3.33245	No
SLV 3	-15698	-11216	-74	0.088	1905.3	0.953	1.34805	3.47592	No
SLV 4	-15698	-11216	-74	0.088	1905.3	0.953	1.34805	3.47592	No

Tabella dei coefficienti di sicurezza minimi

Stato limite	Coeff.s.	Comb.	Verifica
PF_SLU	3.83	SLU 82	Si
V_SLU	5.973	SLU 80	Si
PF_SLV	1.012	SLV 5	Si
V_SLV	0.36	SLV 1	No
PFFP_SLV	3.24	SLV 5	Si
R_SLV	0.369	SLV 5	No

Maschio 54

Verifiche condotte secondo D.M. 17-01-18 (N.T.C.)

Dati geometrici

X ini.	Y ini.	X fin.	Y fin.	Quota i.	Quota.s	l	Sp.	h netta	h ini.	h fin.	a	a.s.,sx	a.s.,dx
-0.143	6.041	-0.143	-3.284	L1	L3	9.325	0.45	2.7	2.7	2.7			

Caratteristiche del materiale

(Circolare 7 21-01-19 C8.5.I) Muratura in mattoni pieni e malta di calce LC2_Corti

fb	fk	fvk0	fmedio	τ0	fv0	μ	ϕ	fv,lim	E	G	FC
600000			345000	9000	20000	0.58	0.77	32500	320000000	128000000	1.2

Verifica a pressoflessione nel piano secondo D.M. 17-01-18 NTC §7.8.2.2.1 in combinazioni non sismiche, γM = 3

Comb.	Quota	N	M	σ0	Mu	c.s.	Verifica
SLU 83	-2.03	-143659	-160721.28	34236	388288.83	2.416	Si
SLU 83	0.67	-97843	-156525.87	23317	325600.58	2.08	Si
SLU 74	-2.03	-139952	-155945.17	33352	385345.93	2.471	Si
SLU 74	0.67	-95029	-152161.07	22647	319884.63	2.102	Si
SLU 82	-2.03	-140503	-153731.9	33484	385807.49	2.51	Si
SLU 82	0.67	-95101	-151901.26	22664	320032.58	2.107	Si
SLU 79	-2.03	-141444	-158835.93	33708	386575.65	2.434	Si
SLU 79	0.67	-96268	-154717.38	22942	322429.01	2.084	Si
SLU 78	-2.03	-141381	-156535	33693	386525.28	2.469	Si
SLU 78	0.67	-96092	-154545.61	22900	322068.74	2.084	Si
SLU 84	-2.03	-142796	-157521.51	34030	387637.23	2.461	Si
SLU 84	0.67	-97003	-155405.83	23117	323917.21	2.084	Si
SLU 80	-2.03	-140581	-155636.15	33502	385871.92	2.479	Si
SLU 80	0.67	-95429	-153597.34	22742	320709.59	2.088	Si
SLU 81	-2.03	-141366	-156931.68	33689	386513.05	2.463	Si
SLU 81	0.67	-95940	-153021.3	22864	321759.52	2.103	Si
SLU 77	-2.03	-142244	-159734.78	33899	387210.17	2.424	Si
SLU 77	0.67	-96931	-155665.64	23100	323772.98	2.08	Si
SLU 75	-2.03	-139089	-152745.4	33147	384607.07	2.518	Si
SLU 75	0.67	-94189	-151041.03	22447	318136.82	2.106	Si

Verifica a pressoflessione nel piano secondo D.M. 17-01-18 NTC §7.8.2.2.1 in combinazioni sismiche, γM = 2

Comb.	Quota	N	M	σ0	Mu	c.s.	Verifica
SLV 3	-2.03	-40064	-51097.61	9548	172199.45	3.37	Si
SLV 3	0.67	-29915	-56848.86	7129	131338.31	2.31	Si
SLV 7	-2.03	-89629	-220502.93	21360	344835.27	1.564	Si
SLV 7	0.67	-71707	-151307.17	17089	287569.67	1.901	Si
SLV 4	-2.03	-40064	-51097.61	9548	172199.45	3.37	Si
SLV 4	0.67	-29915	-56848.86	7129	131338.31	2.31	Si
SLV 16	-2.03	-161750	-248798.22	38547	516229.72	2.075	Si
SLV 16	0.67	-112086	-192957.78	26712	408345.13	2.116	Si
SLV 12	-2.03	-126135	-279813.11	30060	443413.61	1.585	Si
SLV 12	0.67	-96359	-192139.85	22964	364828.88	1.899	Si
SLV 14	-2.03	-155772	-162903.85	37123	505618.15	3.104	Si
SLV 14	0.67	-100915	-152826.19	24049	377899.94	2.473	Si
SLV 13	-2.03	-155772	-162903.85	37123	505618.15	3.104	Si
SLV 13	0.67	-100915	-152826.19	24049	377899.94	2.473	Si
SLV 8	-2.03	-89629	-220502.93	21360	344835.27	1.564	Si
SLV 8	0.67	-71707	-151307.17	17089	287569.67	1.901	Si
SLV 11	-2.03	-126135	-279813.11	30060	443413.61	1.585	Si
SLV 11	0.67	-96359	-192139.85	22964	364828.88	1.899	Si
SLV 15	-2.03	-161750	-248798.22	38547	516229.72	2.075	Si
SLV 15	0.67	-112086	-192957.78	26712	408345.13	2.116	Si

Verifica a taglio nel piano secondo D.M. 17-01-18 (N.T.C.) §7.8.2.2.2 con rottura per scorrimento in combinazioni non sismiche, γM = 3

Comb.	Quota	N	V par	M	σ0	σN	l'	fvd	Vt scorr.	Vt fess.diag.	Vt,lim	c.s.	Verifica
SLU 23	-2.03	-100861	1440	-107465.68		24037	9.3248	8760	36760			25.52	Si
SLU 23	0.67	-67511	1327	-108496.12		16368	9.1659	7738	31916			24.05	Si
SLU 13	-2.03	-103330	1425	-111083.16		24625	9.3248	8839	37089			26.02	Si
SLU 13	0.67	-69387	1309	-111703.54		16838	9.1576	7801	32146			24.55	Si
SLU 34	-2.03	-113671	1392	-124496.86		27089	9.3248	9167	38468			27.63	Si
SLU 34	0.67	-77525	1265	-124397.85		18780	9.1733	8060	33270			26.31	Si
SLU 26	-2.03	-103154	1424	-111255.28		24583	9.3248	8833	37066			26.04	Si
SLU 26	0.67	-69413	1307	-112000.69		16864	9.1466	7804	32121			24.58	Si
SLU 44	-2.03	-114563	1404	-119268.48		27302	9.3248	9196	38587			27.49	Si
SLU 44	0.67	-74815	1276	-120750.03		18179	9.1452	7979	32838			25.74	Si
SLU 10	-2.03	-101038	1442	-107293.56		24079	9.3248	8766	36784			25.51	Si
SLU 10	0.67	-67485	1330	-108198.96		16341	9.1773	7734	31941			24.02	Si
SLU 5	-2.03	-92813	1456	-97841.58		22119	9.3248	8505	35687			24.5	Si
SLU 5	0.67	-61275	1351	-99306.38		14922	9.1252	7545	30983			22.93	Si
SLU 47	-2.03	-116856	1387	-123058.08		27848	9.3248	9269	38893			28.05	Si
SLU 47	0.67	-76717	1255	-124254.61		18676	9.1282	8046	33050			26.33	Si
SLU 2	-2.03	-90521	1473	-94051.98		21572	9.3248	8432	35381			24.02	Si
SLU 2	0.67	-59373	1372	-95801.81		14425	9.1465	7479	30783			22.44	Si
SLU 31	-2.03	-111378	1409	-120707.26		26543	9.3248	9095	38162			27.08	Si
SLU 31	0.67	-75623	1285	-120893.28		18284	9.1913	7993	33061			25.73	Si

Verifica a taglio nel piano secondo D.M. 17-01-18 (N.T.C.) §7.8.2.2.2 con rottura per scorrimento in combinazioni sismiche, γM = 2

Comb.	Quota	N	V par	M	σ0	σN	l'	fvd	Vt scorr.	Vt fess.diag.	Vt,lim	c.s.	Verifica
SLV 3	-2.03	-40064	-14465	-51097.61		9548	9.3248	10243	42981			2.97	Si
SLV 3	0.67	-29915	-15931	-56848.86		8023	8.2862	9938	37056			2.33	Si
SLV 4	-2.03	-40064	-14465	-51097.61		9548	9.3248	10243	42981			2.97	Si
SLV 4	0.67	-29915	-15931	-56848.86		8023	8.2862	9938	37056			2.33	Si
SLV 9	-2.03	-106207	45134	6501.46		25311	9.3248	13395	56209			1.25	Si
SLV 9	0.67	-59123	43471	-58367.89		14090	9.3248	11151	46793			1.08	Si
SLV 10	-2.03	-106207	45134	6501.46		25311	9.3248	13395	56209			1.25	Si
SLV 10	0.67	-59123	43471	-58367.89		14090	9.3248	11151	46793			1.08	Si
SLV 5	-2.03	-69701	44771	65811.64		16611	9.3248	11655	48908			1.09	Si
SLV 5	0.67	-34472	41906	-17535.21		8215	9.3248	9976	41862			1	No, Vu<V
SLV 11	-2.03	-126135	-45346	-279813.11		38229	7.3321	15979	52722			1.16	Si
SLV 11	0.67	-96359	-42697	-192139.85		26749	8.0052	13683	49291			1.15	Si
SLV 12	-2.03	-126135	-45346	-279813.11		38229	7.3321	15979	52722			1.16	Si
SLV 12	0.67	-96359	-42697	-192139.85		26749	8.0052	13683	49291			1.15	Si
SLV 7	-2.03	-89629	-45709	-220502.93		30148	6.6067	14363	42701			0.93	No, Vu<V
SLV 7	0.67	-71707	-44263	-151307.17		20811	7.657	12496	43055			0.97	No, Vu<V
SLV 6	-2.03	-69701	44771	65811.64		16611	9.3248	11655	48908			1.09	Si
SLV 6	0.67	-34472	41906	-17535.21		8215	9.3248	9976	41862			1	No, Vu<V
SLV 8	-2.03	-89629	-45709	-220502.93		30148	6.6067	14363	42701			0.93	No, Vu<V
SLV 8	0.67	-71707	-44263	-151307.17		20811	7.657	12496	43055			0.97	No, Vu<V

Verifica a pressoflessione fuori piano D.M. 17-01-18 (N.T.C.)

quota -0.68 Wa 0.08 denominatore 8 γM = 2

Comb.	fd	Sa	σ0	N	M	Mc	Coeff.s.	Verifica
SLV 1	143750	0.24	6095	-25575	560.52	5467.26	9.75	Si
SLV 2	143750	0.24	6095	-25575	560.52	5467.26	9.75	Si
SLV 3	143750	0.24	8455	-35479	560.52	7430.47	13.26	Si
SLV 4	143750	0.24	8455	-35479	560.52	7430.47	13.26	Si
SLV 5	143750	0.24	11938	-50095	560.52	10170.17	18.14	Si
SLV 6	143750	0.24	11938	-50095	560.52	10170.17	18.14	Si
SLV 10	143750	0.24	19308	-81018	560.52	15348.55	27.38	Si
SLV 9	143750	0.24	19308	-81018	560.52	15348.55	27.38	Si
SLV 7	143750	0.24	19807	-83112	560.52	15668.81	27.95	Si
SLV 8	143750	0.24	19807	-83112	560.52	15668.81	27.95	Si

Verifica dei meccanismi locali di collasso con analisi cinematica lineare

forza di aggancio al piano = 0 quota mezzeria = -0.68 Wa = 0.08 Ta = 0.0271

Comb.	N top	N base	V orto	α0	M*	e*	a0*	aLim	Verifica
SLV 4	-29915	-40064	-924	0.081	4684.3	0.913	1.29648	3.47592	No
SLV 3	-29915	-40064	-924	0.081	4684.3	0.913	1.29648	3.47592	No
SLV 8	-71707	-89629	-814	0.084	8903.2	0.948	1.28377	3.33245	No
SLV 7	-71707	-89629	-814	0.084	8903.2	0.948	1.28377	3.33245	No

Comb.	N top	N base	V orto	α0	M*	e*	a0*	aLim	Verifica
SLV 16	-112086	-161750	-109	0.089	13007.4	0.963	1.34879	3.47592	No
SLV 15	-112086	-161750	-109	0.089	13007.4	0.963	1.34879	3.47592	No
SLV 11	-96359	-126135	-570	0.086	11407.7	0.959	1.30336	3.33245	No
SLV 12	-96359	-126135	-570	0.086	11407.7	0.959	1.30336	3.33245	No
SLV 13	-100915	-155772	41	0.091	11871.1	0.96	1.37173	3.47592	No
SLV 14	-100915	-155772	41	0.091	11871.1	0.96	1.37173	3.47592	No

Tabella dei coefficienti di sicurezza minimi

Stato limite	Coeff.s.	Comb.	Verifica
PF_SLU	2.08	SLU 77	Si
V_SLU	22.442	SLU 2	Si
PF_SLV	1.564	SLV 7	Si
V_SLV	0.934	SLV 7	No
PFFP_SLV	9.754	SLV 1	Si
R_SLV	0.373	SLV 3	No

Maschio 55

Verifiche condotte secondo D.M. 17-01-18 (N.T.C.)

Dati geometrici

X ini.	Y ini.	X fin.	Y fin.	Quota i.	Quota.s	l	Sp.	h netta	h ini.	h fin.	a	a.s.,sx	a.s.,dx
-24.643	-3.254	-24.643	5.798	L3	L4	9.052	0.28	3.68	3.68	3.68			

Caratteristiche del materiale

(Circolare 7 21-01-19 C8.5.I) Muratura in mattoni pieni e malta di calce LC2_Corti

fb	fk	fvk0	fmedio	τ0	fv0	μ	ϕ	fv,lim	E	G	FC
600000			345000	9000	20000	0.58	0.77	32500	320000000	128000000	1.2

Verifica a pressoflessione nel piano secondo D.M. 17-01-18 NTC §7.8.2.2.1 in combinazioni non sismiche, γM = 3

Comb.	Quota	N	M	σ0	Mu	c.s.	Verifica
SLU 78	0.67	-156437	-34167.04	61721	171557.7	5.021	Si
SLU 78	4.35	-109144	-8504.45	43062	232848.44	27.38	Si
SLU 75	0.67	-153755	-35065.74	60663	177657.16	5.066	Si
SLU 75	4.35	-107005	-9220.23	42218	233302.61	25.303	Si
SLU 81	0.67	-156966	-38412.39	61930	170318.68	4.434	Si
SLU 81	4.35	-108686	-11421.55	42881	232962.42	20.397	Si
SLU 82	0.67	-155482	-36990.88	61344	173766.14	4.698	Si
SLU 82	4.35	-107845	-10284.08	42549	233148.17	22.671	Si
SLU 80	0.67	-155269	-33603.98	61260	174252.65	5.185	Si
SLU 80	4.35	-108152	-8215.33	42670	233084.05	28.372	Si
SLU 83	0.67	-159648	-37513.69	62988	163841.6	4.368	Si
SLU 83	4.35	-110825	-10705.77	43725	232350.54	21.703	Si
SLU 84	0.67	-158164	-36092.18	62402	167463.56	4.64	Si
SLU 84	4.35	-109984	-9568.31	43393	232615.21	24.311	Si
SLU 74	0.67	-155238	-36487.25	61248	174322.06	4.778	Si
SLU 74	4.35	-107846	-10357.69	42550	233147.86	22.51	Si
SLU 79	0.67	-156753	-35025.49	61846	170819.03	4.877	Si
SLU 79	4.35	-108993	-9352.79	43002	232886.98	24.9	Si
SLU 77	0.67	-157921	-35588.54	62306	168048.09	4.722	Si
SLU 77	4.35	-109985	-9641.91	43394	232614.77	24.125	Si

Verifica a pressoflessione nel piano secondo D.M. 17-01-18 NTC §7.8.2.2.1 in combinazioni sismiche, γM = 2

Comb.	Quota	N	M	σ0	Mu	c.s.	Verifica
SLV 6	0.67	-126162	-171716.39	49776	338396.42	1.971	Si
SLV 6	4.35	-84261	-79201.09	33245	277607.59	3.505	Si
SLV 11	0.67	-88450	119986.85	34897	285993.57	2.384	Si
SLV 11	4.35	-63766	64527.81	25158	229183.79	3.552	Si
SLV 12	0.67	-88450	119986.85	34897	285993.57	2.384	Si
SLV 12	4.35	-63766	64527.81	25158	229183.79	3.552	Si
SLV 5	0.67	-126162	-171716.39	49776	338396.42	1.971	Si
SLV 5	4.35	-84261	-79201.09	33245	277607.59	3.505	Si
SLV 9	0.67	-84487	-152353.73	33334	278071.31	1.825	Si
SLV 9	4.35	-61349	-67198.2	24205	222661.98	3.314	Si
SLV 7	0.67	-130125	100624.19	51340	341490.26	3.394	Si
SLV 7	4.35	-86679	52524.92	34199	282510.21	5.379	Si
SLV 16	0.67	-38442	47257.42	15167	152393.54	3.225	Si
SLV 16	4.35	-36188	32427.08	14278	144650.43	4.461	Si
SLV 15	0.67	-38442	47257.42	15167	152393.54	3.225	Si
SLV 15	4.35	-36188	32427.08	14278	144650.43	4.461	Si
SLV 10	0.67	-84487	-152353.73	33334	278071.31	1.825	Si
SLV 10	4.35	-61349	-67198.2	24205	222661.98	3.314	Si
SLV 8	0.67	-130125	100624.19	51340	341490.26	3.394	Si
SLV 8	4.35	-86679	52524.92	34199	282510.21	5.379	Si

Verifica a taglio nel piano secondo D.M. 17-01-18 (N.T.C.) §7.8.2.2.2 con rottura per scorrimento in combinazioni non sismiche, γM = 3

Comb.	Quota	N	V par	M	σ0	σN	l'	fvd	Vt scorr.	Vt fess.diag.	Vt,lim	c.s.	Verifica
SLU 5	0.67	-100087	-990	-20669.78		39489	9.0521	10821	27426			27.71	Si
SLU 5	4.35	-69430	-1349	-3988.16		27393	9.0521	9208	23338			17.3	Si
SLU 26	0.67	-113072	-927	-23705.82		44612	9.0521	10833	27458			29.63	Si
SLU 26	4.35	-78784	-1357	-5080.63		31084	9.0521	9700	24586			18.12	Si
SLU 31	0.67	-123403	-919	-28313.35		48688	9.0521	10833	27458			29.86	Si
SLU 31	4.35	-85911	-1402	-7283.22		33896	9.0521	10075	25536			18.21	Si
SLU 44	0.67	-122916	-891	-27708.85		48496	9.0521	10833	27458			30.8	Si
SLU 44	4.35	-84692	-1381	-6309.28		33415	9.0521	10011	25373			18.38	Si
SLU 10	0.67	-110419	-983	-25277.3		43565	9.0521	10833	27458			27.94	Si
SLU 10	4.35	-76558	-1394	-6190.75		30205	9.0521	9583	24289			17.42	Si

Comb.	Quota	N	V par	M	σ0	σN	l'	fvd	Vt scorr.	Vt fess.diag.	Vt,lim	c.s.	Verifica
SLU 2	0.67	-97405	-1036	-21568.48		38430	9.0521	10680	27068			26.13	Si
SLU 2	4.35	-67291	-1378	-4703.93		26549	9.0521	9095	23053			16.73	Si
SLU 13	0.67	-113101	-937	-24378.6		44623	9.0521	10833	27458			29.31	Si
SLU 13	4.35	-78697	-1365	-5474.98		31049	9.0521	9695	24574			18.01	Si
SLU 34	0.67	-126086	-874	-27414.64		49746	9.0521	10833	27458			31.43	Si
SLU 34	4.35	-88050	-1373	-6567.45		34740	9.0521	10187	25821			18.81	Si
SLU 23	0.67	-110389	-973	-24604.53		43553	9.0521	10833	27458			28.23	Si
SLU 23	4.35	-76645	-1386	-5796.4		30240	9.0521	9588	24300			17.53	Si
SLU 47	0.67	-125599	-845	-26810.15		49554	9.0521	10833	27458			32.48	Si
SLU 47	4.35	-86831	-1351	-5593.51		34259	9.0521	10123	25659			18.99	Si

Verifica a taglio nel piano secondo D.M. 17-01-18 (N.T.C.) §7.8.2.2.2 con rottura per scorrimento in combinazioni sismiche, γM = 2

Comb.	Quota	N	V par	M	σ0	σN	l'	fvd	Vt scorr.	Vt fess.diag.	Vt,lim	c.s.	Verifica
SLV 16	0.67	-38442	14830	47257.42		15167	9.0521	11367	28810			1.94	Si
SLV 16	4.35	-36188	6847	32427.08		14278	9.0521	11189	28359			4.14	Si
SLV 8	0.67	-130125	41856	100624.19		51340	9.0521	16250	41187			0.98	No, Vu<V
SLV 8	4.35	-86679	26433	52524.92		34199	9.0521	15173	38457			1.45	Si
SLV 7	0.67	-130125	41856	100624.19		51340	9.0521	16250	41187			0.98	No, Vu<V
SLV 7	4.35	-86679	26433	52524.92		34199	9.0521	15173	38457			1.45	Si
SLV 6	0.67	-126162	-41707	-171716.39		49776	9.0521	16250	41187			0.99	No, Vu<V
SLV 6	4.35	-84261	-25895	-79201.09		33245	9.0521	14982	37974			1.47	Si
SLV 15	0.67	-38442	14830	47257.42		15167	9.0521	11367	28810			1.94	Si
SLV 15	4.35	-36188	6847	32427.08		14278	9.0521	11189	28359			4.14	Si
SLV 5	0.67	-126162	-41707	-171716.39		49776	9.0521	16250	41187			0.99	No, Vu<V
SLV 5	4.35	-84261	-25895	-79201.09		33245	9.0521	14982	37974			1.47	Si
SLV 12	0.67	-88450	42881	119986.85		34897	9.0521	15313	38812			0.91	No, Vu<V
SLV 12	4.35	-63766	25847	64527.81		25158	9.0521	13365	33875			1.31	Si
SLV 11	0.67	-88450	42881	119986.85		34897	9.0521	15313	38812			0.91	No, Vu<V
SLV 11	4.35	-63766	25847	64527.81		25158	9.0521	13365	33875			1.31	Si
SLV 9	0.67	-84487	-40682	-152353.73		36940	8.1683	15721	35957			0.88	No, Vu<V
SLV 9	4.35	-61349	-26482	-67198.2		24205	9.0521	13174	33391			1.26	Si
SLV 10	0.67	-84487	-40682	-152353.73		36940	8.1683	15721	35957			0.88	No, Vu<V
SLV 10	4.35	-61349	-26482	-67198.2		24205	9.0521	13174	33391			1.26	Si

Verifica a pressoflessione fuori piano D.M. 17-01-18 (N.T.C.)

quota 2.51 Wa 0.05 denominatore 8 γM = 2

Comb.	fd	Sa	σ0	N	M	Mc	Coeff.s.	Verifica
SLV 15	143750	0.3	15644	-39651	785.62	4840.4	6.16	Si
SLV 16	143750	0.3	15644	-39651	785.62	4840.4	6.16	Si
SLV 14	143750	0.3	15927	-40368	785.62	4914.86	6.26	Si
SLV 13	143750	0.3	15927	-40368	785.62	4914.86	6.26	Si
SLV 12	143750	0.3	28938	-73346	785.62	7836.5	9.97	Si
SLV 11	143750	0.3	28938	-73346	785.62	7836.5	9.97	Si
SLV 9	143750	0.3	29881	-75736	785.62	8010.07	10.2	Si
SLV 10	143750	0.3	29881	-75736	785.62	8010.07	10.2	Si
SLV 8	143750	0.3	40616	-102944	785.62	9621.48	12.25	Si
SLV 7	143750	0.3	40616	-102944	785.62	9621.48	12.25	Si

Verifica dei meccanismi locali di collasso con analisi cinematica lineare

forza di aggancio al piano = 0 quota mezzeria = 2.51 Wa = 0.05 Ta = 0.0808

Comb.	N top	N base	V orto	α0	M*	e*	a0*	aLim	Verifica
SLV 3	-112565	-177359	81	0.04	12773.4	0.969	0.60036	10.39734	No
SLV 4	-112565	-177359	81	0.04	12773.4	0.969	0.60036	10.39734	No
SLV 1	-111839	-176170	61	0.04	12699.6	0.969	0.60314	10.39734	No
SLV 2	-111839	-176170	61	0.04	12699.6	0.969	0.60314	10.39734	No
SLV 14	-35463	-37253	-80	0.043	4943.8	0.928	0.68097	10.39734	No
SLV 13	-35463	-37253	-80	0.043	4943.8	0.928	0.68097	10.39734	No
SLV 16	-36188	-38442	-60	0.044	5017	0.929	0.68601	10.39734	No
SLV 15	-36188	-38442	-60	0.044	5017	0.929	0.68601	10.39734	No
SLV 8	-86679	-130125	55	0.041	10139.1	0.961	0.61724	9.1791	No
SLV 7	-86679	-130125	55	0.041	10139.1	0.961	0.61724	9.1791	No

Tabella dei coefficienti di sicurezza minimi

Stato limite	Coeff.s.	Comb.	Verifica
PF_SLU	4.368	SLU 83	Si
V_SLU	16.727	SLU 2	Si
PF_SLV	1.825	SLV 9	Si
V_SLV	0.884	SLV 9	No
PFFP_SLV	6.161	SLV 15	Si
R_SLV	0.058	SLV 3	No

Maschio 56

Verifiche condotte secondo D.M. 17-01-18 (N.T.C.)

Dati geometrici

X ini.	Y ini.	X fin.	Y fin.	Quota i.	Quota.s	l	Sp.	h netta	h ini.	h fin.	a	a.s.,sx	a.s.,dx
-22.849	5.798	-24.643	5.798	L3	L4	1.794	0.28	3.68	3.68	3.68			

Caratteristiche del materiale

(Circolare 7 21-01-19 C8.5.I) Muratura in mattoni pieni e malta di calce LC2_Corti

fb	fk	fvk0	fmedio	τ0	fv0	μ	ϕ	fv,lim	E	G	FC
600000			345000	9000	20000	0.58	0.77	32500	320000000	128000000	1.2

Verifica a pressoflessione nel piano secondo D.M. 17-01-18 NTC §7.8.2.2.1 in combinazioni non sismiche, γM = 3

Comb.	Quota	N	M	σ0	Mu	c.s.	Verifica
SLU 78	1.57	-22641	920.24	45062	9076.14	9.863	Si
SLU 78	3.47	-24384	-1947.81	48532	8843.13	4.54	Si
SLU 83	1.57	-22995	876.28	45767	9039.59	10.316	Si
SLU 83	3.47	-24691	-1935.51	49144	8788.22	4.541	Si
SLU 80	1.57	-22474	929	44730	9091.45	9.786	Si
SLU 80	3.47	-24220	-1941.91	48206	8870.71	4.568	Si
SLU 79	1.57	-22658	953.77	45096	9074.53	9.514	Si
SLU 79	3.47	-24336	-1924.05	48437	8851.29	4.6	Si
SLU 82	1.57	-22366	747.73	44515	9100.73	12.171	Si
SLU 82	3.47	-23953	-1862.44	47675	8913.07	4.786	Si
SLU 76	1.57	-21906	808.71	43600	9134.44	11.295	Si
SLU 76	3.47	-23521	-1862.89	46814	8975.16	4.818	Si
SLU 77	1.57	-22824	945	45428	9057.88	9.585	Si
SLU 77	3.47	-24500	-1929.95	48763	8822.88	4.572	Si
SLU 75	1.57	-22195	816.46	44175	9114.32	11.163	Si
SLU 75	3.47	-23762	-1856.88	47294	8941.55	4.815	Si
SLU 81	1.57	-22549	772.49	44880	9084.69	11.76	Si
SLU 81	3.47	-24070	-1844.58	47906	8895.02	4.822	Si
SLU 84	1.57	-22811	851.52	45402	9059.22	10.639	Si
SLU 84	3.47	-24575	-1953.37	48913	8809.44	4.51	Si

Verifica a pressoflessione nel piano secondo D.M. 17-01-18 NTC §7.8.2.2.1 in combinazioni sismiche, γM = 2

Comb.	Quota	N	M	σ0	Mu	c.s.	Verifica
SLV 13	1.57	-7429	-2995.44	14786	5858.76	1.956	Si
SLV 13	3.47	-3244	2386	6456	2756.36	1.155	Si
SLV 10	1.57	124	177.06	0	0	0	No, Trazione
SLV 10	3.47	-1861	779.32	3704	1619.24	2.078	Si
SLV 9	1.57	124	177.06	0	0	0	No, Trazione
SLV 9	3.47	-1861	779.32	3704	1619.24	2.078	Si
SLV 2	1.57	-14787	4512.17	29432	10071.61	2.232	Si
SLV 2	3.47	-22202	-4146.52	44189	12715.82	3.067	Si
SLV 3	1.57	-23469	4045.17	46710	13006.77	3.215	Si
SLV 3	3.47	-29075	-4729.12	57868	13731.67	2.904	Si
SLV 6	1.57	-2084	2429.35	0	0	0	No, e>l/2
SLV 6	3.47	-7549	-1180.44	15024	5940	5.032	Si
SLV 5	1.57	-2084	2429.35	0	0	0	No, e>l/2
SLV 5	3.47	-7549	-1180.44	15024	5940	5.032	Si
SLV 4	1.57	-23469	4045.17	46710	13006.77	3.215	Si
SLV 4	3.47	-29075	-4729.12	57868	13731.67	2.904	Si
SLV 14	1.57	-7429	-2995.44	14786	5858.76	1.956	Si
SLV 14	3.47	-3244	2386	6456	2756.36	1.155	Si
SLV 1	1.57	-14787	4512.17	29432	10071.61	2.232	Si
SLV 1	3.47	-22202	-4146.52	44189	12715.82	3.067	Si

Verifica a taglio nel piano secondo D.M. 17-01-18 (N.T.C.) §7.8.2.2.2 con rottura per scorrimento in combinazioni non sismiche, γM = 3

Comb.	Quota	N	V par	M	σ0	σN	l'	fvd	Vt scorr.	Vt fess.diag.	Vt,lim	c.s.	Verifica
SLU 74	1.57	-22379	3091	841.22		44541	1.7944	10833	5443			1.76	Si
SLU 74	3.47	-23878	3132	-1839.02		47525	1.7944	10833	5443			1.74	Si
SLU 75	1.57	-22195	3120	816.46		44175	1.7944	10833	5443			1.74	Si
SLU 75	3.47	-23762	3159	-1856.88		47294	1.7944	10833	5443			1.72	Si
SLU 77	1.57	-22824	3276	945		45428	1.7944	10833	5443			1.66	Si
SLU 77	3.47	-24500	3318	-1929.95		48763	1.7944	10833	5443			1.64	Si
SLU 78	1.57	-22641	3305	920.24		45062	1.7944	10833	5443			1.65	Si
SLU 78	3.47	-24384	3345	-1947.81		48532	1.7944	10833	5443			1.63	Si
SLU 83	1.57	-22995	3253	876.28		45767	1.7944	10833	5443			1.67	Si
SLU 83	3.47	-24691	3295	-1935.51		49144	1.7944	10833	5443			1.65	Si
SLU 80	1.57	-22474	3308	929		44730	1.7944	10833	5443			1.65	Si
SLU 80	3.47	-24220	3348	-1941.91		48206	1.7944	10833	5443			1.63	Si
SLU 76	1.57	-21906	3143	808.71		43600	1.7944	10833	5443			1.73	Si
SLU 76	3.47	-23521	3180	-1862.89		46814	1.7944	10833	5443			1.71	Si
SLU 82	1.57	-22366	3097	747.73		44515	1.7944	10833	5443			1.76	Si
SLU 82	3.47	-23953	3136	-1862.44		47675	1.7944	10833	5443			1.74	Si
SLU 79	1.57	-22658	3279	953.77		45096	1.7944	10833	5443			1.66	Si
SLU 79	3.47	-24336	3321	-1924.05		48437	1.7944	10833	5443			1.64	Si
SLU 84	1.57	-22811	3282	851.52		45402	1.7944	10833	5443			1.66	Si
SLU 84	3.47	-24575	3322	-1953.37		48913	1.7944	10833	5443			1.64	Si

Verifica a taglio nel piano secondo D.M. 17-01-18 (N.T.C.) §7.8.2.2.2 con rottura per scorrimento in combinazioni sismiche, γM = 2

Comb.	Quota	N	V par	M	σ0	σN	l'	fvd	Vt scorr.	Vt fess.diag.	Vt,lim	c.s.	Verifica
SLV 1	1.57	-14787	8457	4512.17		29733	1.7762	14280	7102			0.84	No, Vu<V
SLV 1	3.47	-22202	7106	-4146.52		44189	1.7944	16250	8165			1.15	Si
SLV 10	1.57	124	-2384	177.06		0	0	8333	0			0	No, Vu<V
SLV 10	3.47	-1861	-2006	779.32		4631	1.4354	9259	3722			1.86	Si
SLV 3	1.57	-23469	9787	4045.17		46710	1.7944	16250	8165			0.83	No, Vu<V
SLV 3	3.47	-29075	8471	-4729.12		57868	1.7944	16250	8165			0.96	No, Vu<V
SLV 5	1.57	-2084	1904	2429.35		0	0	8333	0			0	No, Vu<V
SLV 5	3.47	-7549	1465	-1180.44		15024	1.7944	11338	5697			3.89	Si
SLV 14	1.57	-7429	-5835	-2995.44		17903	1.482	11914	4944			0.85	No, Vu<V
SLV 14	3.47	-3244	-4463	2386		23897	0.4848	13113	1780			0.4	No, Vu<V
SLV 9	1.57	124	-2384	177.06		0	0	8333	0			0	No, Vu<V
SLV 9	3.47	-1861	-2006	779.32		4631	1.4354	9259	3722			1.86	Si
SLV 13	1.57	-7429	-5835	-2995.44		17903	1.482	11914	4944			0.85	No, Vu<V
SLV 13	3.47	-3244	-4463	2386		23897	0.4848	13113	1780			0.4	No, Vu<V
SLV 6	1.57	-2084	1904	2429.35		0	0	8333	0			0	No, Vu<V
SLV 6	3.47	-7549	1465	-1180.44		15024	1.7944	11338	5697			3.89	Si
SLV 4	1.57	-23469	9787	4045.17		46710	1.7944	16250	8165			0.83	No, Vu<V
SLV 4	3.47	-29075	8471	-4729.12		57868	1.7944	16250	8165			0.96	No, Vu<V
SLV 2	1.57	-14787	8457	4512.17		29733	1.7762	14280	7102			0.84	No, Vu<V
SLV 2	3.47	-22202	7106	-4146.52		44189	1.7944	16250	8165			1.15	Si

Verifica a pressoflessione fuori piano D.M. 17-01-18 (N.T.C.)

quota 2.51 Wa 0.05 denominatore 8 γM = 2

Comb.	fd	Sa	σ0	N	M	Mc	Coeff.s.	Verifica
SLV 10	143750	0.3	2433	-1222	155.73	167.74	1.08	Si
SLV 9	143750	0.3	2433	-1222	155.73	167.74	1.08	Si
SLV 5	143750	0.3	10238	-5144	155.73	659.83	4.24	Si
SLV 6	143750	0.3	10238	-5144	155.73	659.83	4.24	Si
SLV 14	143750	0.3	11344	-5700	155.73	723.87	4.65	Si
SLV 13	143750	0.3	11344	-5700	155.73	723.87	4.65	Si
SLV 15	143750	0.3	26787	-13459	155.73	1471.16	9.45	Si
SLV 16	143750	0.3	26787	-13459	155.73	1471.16	9.45	Si
SLV 2	143750	0.3	37362	-18772	155.73	1824.46	11.72	Si
SLV 1	143750	0.3	37362	-18772	155.73	1824.46	11.72	Si

Verifica dei meccanismi locali di collasso con analisi cinematica lineare

forza di aggancio al piano = 0 quota mezzeria = 2.51 Wa = 0.05 Ta = 0.0808

Comb.	N top	N base	V orto	α0	M*	e*	a0*	aLim	Verifica
SLV 10	-3234	665	60	0	0	0	0	9.1791	No, Trazione
SLV 9	-3234	665	60	0	0	0	0	9.1791	No, Trazione
SLV 2	-15777	-17309	30	0.04	1866.9	0.959	0.60583	10.39734	No
SLV 1	-15777	-17309	30	0.04	1866.9	0.959	0.60583	10.39734	No
SLV 4	-20668	-25526	-6	0.041	2364.5	0.967	0.61082	10.39734	No
SLV 3	-20668	-25526	-6	0.041	2364.5	0.967	0.61082	10.39734	No
SLV 15	-10149	-12622	-23	0.041	1295.5	0.943	0.63857	10.39734	No
SLV 16	-10149	-12622	-23	0.041	1295.5	0.943	0.63857	10.39734	No
SLV 12	-19537	-26725	-58	0.038	2249.4	0.965	0.57634	9.1791	No
SLV 11	-19537	-26725	-58	0.038	2249.4	0.965	0.57634	9.1791	No

Tabella dei coefficienti di sicurezza minimi

Stato limite	Coeff.s.	Comb.	Verifica
PF_SLU	4.51	SLU 84	Si
V_SLU	1.626	SLU 80	Si
PF_SLV	0	SLV 10	No
V_SLV	0	SLV 5	No
PFFP_SLV	1.077	SLV 9	Si
R_SLV	0	SLV 10	No

Maschio 57

Verifiche condotte secondo D.M. 17-01-18 (N.T.C.)

Dati geometrici

X ini.	Y ini.	X fin.	Y fin.	Quota i.	Quota.s	l	Sp.	h netta	h ini.	h fin.	a	a.s.,sx	a.s.,dx
-19.687	5.798	-21.849	5.798	L3	L4	2.161	0.28	3.68	3.68	3.68			

Caratteristiche del materiale

(Circolare 7 21-01-19 C8.5.I) Muratura in mattoni pieni e malta di calce LC2_Corti

fb	fk	fvk0	fmedio	τ0	fv0	μ	ϕ	fv,lim	E	G	FC
600000			345000	9000	20000	0.58	0.77	32500	320000000	128000000	1.2

Verifica a pressoflessione nel piano secondo D.M. 17-01-18 NTC §7.8.2.2.1 in combinazioni non sismiche, γM = 3

Comb.	Quota	N	M	σ0	Mu	c.s.	Verifica
SLU 83	1.57	-39242	-3027.23	64841	8651.43	2.858	Si
SLU 83	3.47	-32830	-428.37	54246	11852.71	27.669	Si
SLU 74	1.57	-38059	-2936.28	62886	9377.88	3.194	Si
SLU 74	3.47	-31744	-428.96	52451	12216.52	28.479	Si
SLU 84	1.57	-39180	-3029.09	64738	8691.54	2.869	Si
SLU 84	3.47	-32770	-447.04	54146	11874.23	26.562	Si
SLU 80	1.57	-38316	-2812.24	63311	9225.11	3.28	Si
SLU 80	3.47	-31827	-523.05	52589	12190.3	23.306	Si
SLU 77	1.57	-38701	-2854.51	63947	8991.19	3.15	Si
SLU 77	3.47	-32190	-506.12	53188	12073.43	23.855	Si
SLU 82	1.57	-38537	-3110.86	63676	9091.69	2.923	Si
SLU 82	3.47	-32324	-369.89	53409	12028.67	32.52	Si
SLU 78	1.57	-38639	-2856.36	63844	9029.8	3.161	Si
SLU 78	3.47	-32129	-524.79	53088	12093.26	23.044	Si
SLU 79	1.57	-38379	-2810.38	63415	9187.38	3.269	Si
SLU 79	3.47	-31888	-504.38	52689	12171.27	24.131	Si
SLU 75	1.57	-37996	-2938.14	62782	9414.72	3.204	Si
SLU 75	3.47	-31683	-447.63	52351	12235.17	27.333	Si
SLU 81	1.57	-38600	-3109.01	63780	9053.36	2.912	Si
SLU 81	3.47	-32384	-351.22	53509	12008.32	34.191	Si

Verifica a pressoflessione nel piano secondo D.M. 17-01-18 NTC §7.8.2.2.1 in combinazioni sismiche, γM = 2

Comb.	Quota	N	M	σ0	Mu	c.s.	Verifica
SLV 14	1.57	-12579	-6940.73	20785	11282.17	1.626	Si
SLV 14	3.47	-18648	3420.53	30813	15071.33	4.406	Si
SLV 9	1.57	-8938	-4160.83	14769	8492.23	2.041	Si
SLV 9	3.47	-10856	271.33	17937	10009.62	36.892	Si
SLV 4	1.57	-39549	2789.39	65348	19882.7	7.128	Si
SLV 4	3.47	-24534	-3938.78	40538	17717.66	4.498	Si
SLV 13	1.57	-12579	-6940.73	20785	11282.17	1.626	Si
SLV 13	3.47	-18648	3420.53	30813	15071.33	4.406	Si
SLV 2	1.57	-30925	2376.88	51097	19444.68	8.181	Si
SLV 2	3.47	-18037	-4316.88	29804	14738.68	3.414	Si
SLV 10	1.57	-8938	-4160.83	14769	8492.23	2.041	Si
SLV 10	3.47	-10856	271.33	17937	10009.62	36.892	Si

Comb.	Quota	N	M	σ0	Mu	c.s.	Verifica
SLV 1	1.57	-30925	2376.88	51097	19444.68	8.181	Si
SLV 1	3.47	-18037	-4316.88	29804	14738.68	3.414	Si
SLV 15	1.57	-21204	-6528.23	35035	16344.74	2.504	Si
SLV 15	3.47	-25144	3798.63	41547	17934.32	4.721	Si
SLV 3	1.57	-39549	2789.39	65348	19882.7	7.128	Si
SLV 3	3.47	-24534	-3938.78	40538	17717.66	4.498	Si
SLV 16	1.57	-21204	-6528.23	35035	16344.74	2.504	Si
SLV 16	3.47	-25144	3798.63	41547	17934.32	4.721	Si

Verifica a taglio nel piano secondo D.M. 17-01-18 (N.T.C.) §7.8.2.2.2 con rottura per scorrimento in combinazioni non sismiche, γM = 3

Comb.	Quota	N	V par	M	σ0	σN	I'	fvd	Vt scorr.	Vt fess.diag.	Vt,lim	c.s.	Verifica
SLU 78	1.57	-38639	1094	-2856.36		63844	2.1615	10833	6556			5.99	Si
SLU 78	3.47	-32129	1091	-524.79		53088	2.1615	10833	6556			6.01	Si
SLU 71	1.57	-34866	1104	-2495.19		57611	2.1615	10833	6556			5.94	Si
SLU 71	3.47	-28648	1100	-501.71		47335	2.1615	10833	6556			5.96	Si
SLU 72	1.57	-34803	1112	-2497.05		57507	2.1615	10833	6556			5.9	Si
SLU 72	3.47	-28587	1109	-520.38		47236	2.1615	10833	6556			5.91	Si
SLU 69	1.57	-35188	1094	-2539.32		58143	2.1615	10833	6556			5.99	Si
SLU 69	3.47	-28950	1090	-503.45		47834	2.1615	10833	6556			6.02	Si
SLU 77	1.57	-38701	1086	-2854.51		63947	2.1615	10833	6556			6.03	Si
SLU 77	3.47	-32190	1082	-506.12		53188	2.1615	10833	6556			6.06	Si
SLU 79	1.57	-38379	1097	-2810.38		63415	2.1615	10833	6556			5.98	Si
SLU 79	3.47	-31888	1092	-504.38		52689	2.1615	10833	6556			6	Si
SLU 80	1.57	-38316	1104	-2812.24		63311	2.1615	10833	6556			5.94	Si
SLU 80	3.47	-31827	1101	-523.05		52589	2.1615	10833	6556			5.95	Si
SLU 51	1.57	-31293	1025	-2226.04		51706	2.1615	10833	6556			6.4	Si
SLU 51	3.47	-25470	1021	-480		42084	2.1615	10833	6556			6.42	Si
SLU 70	1.57	-35126	1101	-2541.17		58039	2.1615	10833	6556			5.95	Si
SLU 70	3.47	-28889	1098	-522.12		47735	2.1615	10833	6556			5.97	Si
SLU 50	1.57	-31355	1017	-2224.18		51810	2.1615	10833	6556			6.44	Si
SLU 50	3.47	-25530	1013	-461.33		42184	2.1615	10833	6556			6.48	Si

Verifica a taglio nel piano secondo D.M. 17-01-18 (N.T.C.) §7.8.2.2.2 con rottura per scorrimento in combinazioni sismiche, γM = 2

Comb.	Quota	N	V par	M	σ0	σN	I'	fvd	Vt scorr.	Vt fess.diag.	Vt,lim	c.s.	Verifica
SLV 2	1.57	-30925	11068	2376.88		51097	2.1615	16250	9835			0.89	No, Vu<V
SLV 2	3.47	-18037	8831	-4316.88		29804	2.1615	14294	8651			0.98	No, Vu<V
SLV 9	1.57	-8938	-3684	-4160.83		17296	1.8457	11793	6094			1.65	Si
SLV 9	3.47	-10856	-4090	271.33		17937	2.1615	11921	7214			1.76	Si
SLV 10	1.57	-8938	-3684	-4160.83		17296	1.8457	11793	6094			1.65	Si
SLV 10	3.47	-10856	-4090	271.33		17937	2.1615	11921	7214			1.76	Si
SLV 4	1.57	-39549	11642	2789.39		65348	2.1615	16250	9835			0.84	No, Vu<V
SLV 4	3.47	-24534	9996	-3938.78		40538	2.1615	16250	9835			0.98	No, Vu<V
SLV 15	1.57	-21204	-10021	-6528.23		35035	2.1615	15340	9284			0.93	No, Vu<V
SLV 15	3.47	-25144	-7791	3798.63		41547	2.1615	16250	9835			1.26	Si
SLV 3	1.57	-39549	11642	2789.39		65348	2.1615	16250	9835			0.84	No, Vu<V
SLV 3	3.47	-24534	9996	-3938.78		40538	2.1615	16250	9835			0.98	No, Vu<V
SLV 1	1.57	-30925	11068	2376.88		51097	2.1615	16250	9835			0.89	No, Vu<V
SLV 1	3.47	-18037	8831	-4316.88		29804	2.1615	14294	8651			0.98	No, Vu<V
SLV 14	1.57	-12579	-10596	-6940.73		28311	1.5869	13995	6219			0.59	No, Vu<V
SLV 14	3.47	-18648	-8956	3420.53		30813	2.1615	14496	8773			0.98	No, Vu<V
SLV 13	1.57	-12579	-10596	-6940.73		28311	1.5869	13995	6219			0.59	No, Vu<V
SLV 13	3.47	-18648	-8956	3420.53		30813	2.1615	14496	8773			0.98	No, Vu<V
SLV 16	1.57	-21204	-10021	-6528.23		35035	2.1615	15340	9284			0.93	No, Vu<V
SLV 16	3.47	-25144	-7791	3798.63		41547	2.1615	16250	9835			1.26	Si

Verifica a pressoflessione fuori piano D.M. 17-01-18 (N.T.C.)

quota 2.51 Wa 0.05 denominatore 8 γM = 2

Comb.	fd	Sa	σ0	N	M	Mc	Coeff.s.	Verifica
SLV 9	143750	0.3	17246	-10437	187.59	1254.97	6.69	Si
SLV 10	143750	0.3	17246	-10437	187.59	1254.97	6.69	Si
SLV 5	143750	0.3	21592	-13068	187.59	1506.19	8.03	Si
SLV 6	143750	0.3	21592	-13068	187.59	1506.19	8.03	Si
SLV 14	143750	0.3	26355	-15950	187.59	1751.39	9.34	Si
SLV 13	143750	0.3	26355	-15950	187.59	1751.39	9.34	Si
SLV 15	143750	0.3	38510	-23307	187.59	2234.54	11.91	Si
SLV 16	143750	0.3	38510	-23307	187.59	2234.54	11.91	Si
SLV 1	143750	0.3	40844	-24719	187.59	2303.85	12.28	Si
SLV 2	143750	0.3	40844	-24719	187.59	2303.85	12.28	Si

Verifica dei meccanismi locali di collasso con analisi cinematica lineare

forza di aggancio al piano = 0 quota mezzeria = 2.51 Wa = 0.05 Ta = 0.0808

Comb.	N top	N base	V orto	α0	M*	e*	a0*	aLim	Verifica
SLV 15	-19279	-23550	-102	0.037	2276.8	0.959	0.5585	10.39734	No
SLV 16	-19279	-23550	-102	0.037	2276.8	0.959	0.5585	10.39734	No
SLV 2	-17428	-27162	101	0.037	2088.6	0.956	0.55905	10.39734	No
SLV 1	-17428	-27162	101	0.037	2088.6	0.956	0.55905	10.39734	No
SLV 5	-10433	-12703	129	0.034	1379	0.937	0.52446	9.1791	No
SLV 6	-10433	-12703	129	0.034	1379	0.937	0.52446	9.1791	No
SLV 4	-22467	-35862	36	0.04	2601	0.964	0.59855	10.39734	No
SLV 3	-22467	-35862	36	0.04	2601	0.964	0.59855	10.39734	No
SLV 12	-26273	-38009	-129	0.036	2988.5	0.968	0.54287	9.1791	No
SLV 11	-26273	-38009	-129	0.036	2988.5	0.968	0.54287	9.1791	No

Tabella dei coefficienti di sicurezza minimi

Stato limite	Coeff.s.	Comb.	Verifica
PF_SLU	2.858	SLU 83	Si
V_SLU	5.898	SLU 72	Si
PF_SLV	1.626	SLV 13	Si
V_SLV	0.587	SLV 13	No

Stato limite	Coeff.s.	Comb.	Verifica
PFFP_SLV	6.69	SLV 9	Si
R_SLV	0.054	SLV 15	No

Maschio 58

Verifiche condotte secondo D.M. 17-01-18 (N.T.C.)

Dati geometrici

X ini.	Y ini.	X fin.	Y fin.	Quota i.	Quota.s	l	Sp.	h netta	h ini.	h fin.	a	a.s.,sx	a.s.,dx
-22.608	-3.254	-24.643	-3.254	L3	L4	2.035	0.28	3.68	3.68	3.68			

Caratteristiche del materiale

(Circolare 7 21-01-19 C8.5.I) Muratura in mattoni pieni e malta di calce LC2_Corti

fb	fk	fvk0	fmedio	τ0	fv0	μ	ϕ	fv,lim	E	G	FC
600000			345000	9000	20000	0.58	0.77	32500	320000000	128000000	1.2

Verifica a pressoflessione nel piano secondo D.M. 17-01-18 NTC §7.8.2.2.1 in combinazioni non sismiche, γM = 3

Comb.	Quota	N	M	σ0	Mu	c.s.	Verifica
SLU 71	1.57	-17540	5137.56	30785	11101.31	2.161	Si
SLU 71	3.47	-20740	-369.53	36402	11671.81	31.585	Si
SLU 81	1.57	-19414	5550.78	34075	11489.93	2.07	Si
SLU 81	3.47	-23242	-496.29	40792	11805.04	23.787	Si
SLU 69	1.57	-17709	5171.32	31082	11142.76	2.155	Si
SLU 69	3.47	-20935	-358.17	36743	11691.99	32.644	Si
SLU 56	1.57	-17749	5173.17	31151	11152.21	2.156	Si
SLU 56	3.47	-21044	-387.77	36935	11702.6	30.179	Si
SLU 79	1.57	-19190	5580.06	33680	11451.48	2.052	Si
SLU 79	3.47	-23028	-527.04	40417	11804.37	22.398	Si
SLU 62	1.57	-18045	5219.6	31671	11221.22	2.15	Si
SLU 62	3.47	-21447	-417.52	37641	11737.22	28.112	Si
SLU 83	1.57	-19655	5660.25	34498	11528.75	2.037	Si
SLU 83	3.47	-23625	-545.42	41465	11801.21	21.637	Si
SLU 77	1.57	-19359	5613.82	33978	11480.67	2.045	Si
SLU 77	3.47	-23222	-515.67	40758	11805.06	22.892	Si
SLU 74	1.57	-19118	5504.36	33554	11438.72	2.078	Si
SLU 74	3.47	-22839	-466.55	40085	11802.11	25.297	Si
SLU 58	1.57	-17579	5139.42	30854	11111.06	2.162	Si
SLU 58	3.47	-20849	-399.14	36594	11683.35	29.271	Si

Verifica a pressoflessione nel piano secondo D.M. 17-01-18 NTC §7.8.2.2.1 in combinazioni sismiche, γM = 2

Comb.	Quota	N	M	σ0	Mu	c.s.	Verifica
SLV 3	1.57	-14591	10824.43	25610	11734.07	1.084	Si
SLV 3	3.47	-25249	-3062.19	44315	16372.03	5.347	Si
SLV 16	1.57	-4318	-2587.51	7578	4120.56	1.592	Si
SLV 16	3.47	441	3560.33	0	0	0	No, Trazione
SLV 7	1.57	-2166	6842.64	0	0	0	No, e>l/2
SLV 7	3.47	-8942	363.19	15694	7928.92	21.831	Si
SLV 11	1.57	916	2819.05	0	0	0	No, Trazione
SLV 11	3.47	-1234	2349.95	0	0	0	No, e>l/2
SLV 4	1.57	-14591	10824.43	25610	11734.07	1.084	Si
SLV 4	3.47	-25249	-3062.19	44315	16372.03	5.347	Si
SLV 8	1.57	-2166	6842.64	0	0	0	No, e>l/2
SLV 8	3.47	-8942	363.19	15694	7928.92	21.831	Si
SLV 15	1.57	-4318	-2587.51	7578	4120.56	1.592	Si
SLV 15	3.47	441	3560.33	0	0	0	No, Trazione
SLV 1	1.57	-22159	10213.81	38893	15369.19	1.505	Si
SLV 1	3.47	-31520	-4011.48	55321	17549.52	4.375	Si
SLV 2	1.57	-22159	10213.81	38893	15369.19	1.505	Si
SLV 2	3.47	-31520	-4011.48	55321	17549.52	4.375	Si
SLV 12	1.57	916	2819.05	0	0	0	No, Trazione
SLV 12	3.47	-1234	2349.95	0	0	0	No, e>l/2

Verifica a taglio nel piano secondo D.M. 17-01-18 (N.T.C.) §7.8.2.2.2 con rottura per scorrimento in combinazioni non sismiche, γM = 3

Comb.	Quota	N	V par	M	σ0	σN	l'	fvd	Vt scorr.	Vt fess.diag.	Vt,lim	c.s.	Verifica
SLU 79	1.57	-19190	6621	5580.06		33680	2.0348	10046	5724			0.86	No, Vu<V
SLU 79	3.47	-23028	6698	-527.04		40417	2.0348	10833	6172			0.92	No, Vu<V
SLU 58	1.57	-17579	6005	5139.42		30854	2.0348	9669	5509			0.92	No, Vu<V
SLU 58	3.47	-20849	6076	-399.14		36594	2.0348	10435	5945			0.98	No, Vu<V
SLU 77	1.57	-19359	6646	5613.82		33978	2.0348	10086	5747			0.86	No, Vu<V
SLU 77	3.47	-23222	6723	-515.67		40758	2.0348	10833	6172			0.92	No, Vu<V
SLU 81	1.57	-19414	6583	5550.78		34075	2.0348	10099	5754			0.87	No, Vu<V
SLU 81	3.47	-23242	6661	-496.29		40792	2.0348	10833	6172			0.93	No, Vu<V
SLU 83	1.57	-19655	6742	5660.25		34498	2.0348	10155	5786			0.86	No, Vu<V
SLU 83	3.47	-23625	6821	-545.42		41465	2.0348	10833	6172			0.9	No, Vu<V
SLU 69	1.57	-17709	5993	5171.32		31082	2.0348	9700	5527			0.92	No, Vu<V
SLU 69	3.47	-20935	6064	-358.17		36743	2.0348	10455	5957			0.98	No, Vu<V
SLU 74	1.57	-19118	6487	5504.36		33554	2.0348	10029	5714			0.88	No, Vu<V
SLU 74	3.47	-22839	6563	-466.55		40085	2.0348	10833	6172			0.94	No, Vu<V
SLU 71	1.57	-17540	5968	5137.56		30785	2.0348	9660	5504			0.92	No, Vu<V
SLU 71	3.47	-20740	6039	-369.53		36402	2.0348	10409	5931			0.98	No, Vu<V
SLU 62	1.57	-18045	6126	5219.6		31671	2.0348	9778	5571			0.91	No, Vu<V
SLU 62	3.47	-21447	6199	-417.52		37641	2.0348	10574	6025			0.97	No, Vu<V
SLU 56	1.57	-17749	6030	5173.17		31151	2.0348	9709	5532			0.92	No, Vu<V
SLU 56	3.47	-21044	6101	-387.77		36935	2.0348	10480	5971			0.98	No, Vu<V

Verifica a taglio nel piano secondo D.M. 17-01-18 (N.T.C.) §7.8.2.2.2 con rottura per scorrimento in combinazioni sismiche, γM = 2

Comb.	Quota	N	V par	M	σ0	σN	l'	fvd	Vt scorr.	Vt fess.diag.	Vt,lim	c.s.	Verifica
SLV 16	1.57	-4318	-4537	-2587.51		12293	1.2545	10792	3791			0.84	No, Vu<V
SLV 16	3.47	441	-4544	3560.33		0	0	8333	0			0	No, Vu<V
SLV 15	1.57	-4318	-4537	-2587.51		12293	1.2545	10792	3791			0.84	No, Vu<V
SLV 15	3.47	441	-4544	3560.33		0	0	8333	0			0	No, Vu<V
SLV 7	1.57	-2166	8455	6842.64		0	0	8333	0			0	No, Vu<V
SLV 7	3.47	-8942	6887	363.19		15694	2.0348	11472	6536			0.95	No, Vu<V
SLV 4	1.57	-14591	14091	10824.43		63031	0.8268	16250	3762			0.27	No, Vu<V
SLV 4	3.47	-25249	13301	-3062.19		44315	2.0348	16250	9259			0.7	No, Vu<V
SLV 1	1.57	-22159	13333	10213.81		47404	1.6695	16250	7596			0.57	No, Vu<V
SLV 1	3.47	-31520	13446	-4011.48		55321	2.0348	16250	9259			0.69	No, Vu<V
SLV 3	1.57	-14591	14091	10824.43		63031	0.8268	16250	3762			0.27	No, Vu<V
SLV 3	3.47	-25249	13301	-3062.19		44315	2.0348	16250	9259			0.7	No, Vu<V
SLV 8	1.57	-2166	8455	6842.64		0	0	8333	0			0	No, Vu<V
SLV 8	3.47	-8942	6887	363.19		15694	2.0348	11472	6536			0.95	No, Vu<V
SLV 11	1.57	916	2867	2819.05		0	0	8333	0			0	No, Vu<V
SLV 11	3.47	-1234	1533	2349.95		0	0	8333	0			0	No, Vu<V
SLV 2	1.57	-22159	13333	10213.81		47404	1.6695	16250	7596			0.57	No, Vu<V
SLV 2	3.47	-31520	13446	-4011.48		55321	2.0348	16250	9259			0.69	No, Vu<V
SLV 12	1.57	916	2867	2819.05		0	0	8333	0			0	No, Vu<V
SLV 12	3.47	-1234	1533	2349.95		0	0	8333	0			0	No, Vu<V

Verifica a pressoflessione fuori piano D.M. 17-01-18 (N.T.C.)

quota 2.51 Wa 0.05 denominatore 8 γM = 2

Comb.	fd	Sa	σ0	N	M	Mc	Coeff.s.	Verifica
SLV 12	143750	0.3	0	-560	176.6	0	0	No, e>t/2
SLV 11	143750	0.3	0	-560	176.6	0	0	No, e>t/2
SLV 15	143750	0.3	0	-1180	176.6	0	0	No, e>t/2
SLV 16	143750	0.3	0	-1180	176.6	0	0	No, e>t/2
SLV 7	143750	0.3	11940	-6803	176.6	859.31	4.87	Si
SLV 8	143750	0.3	11940	-6803	176.6	859.31	4.87	Si
SLV 14	143750	0.3	13962	-7955	176.6	986.41	5.59	Si
SLV 13	143750	0.3	13962	-7955	176.6	986.41	5.59	Si
SLV 3	143750	0.3	38595	-21990	176.6	2106.16	11.93	Si
SLV 4	143750	0.3	38595	-21990	176.6	2106.16	11.93	Si

Verifica dei meccanismi locali di collasso con analisi cinematica lineare

forza di aggancio al piano = 0 quota mezzeria = 2.51 Wa = 0.05 Ta = 0.0808

Comb.	N top	N base	V orto	α0	M*	e*	a0*	aLim	Verifica
SLV 11	-3079	1430	-106	0	0	0	0	9.1791	No, Trazione
SLV 15	-3023	-2061	-334	0	619.6	0.894	0	10.39734	No
SLV 16	-3023	-2061	-334	0	619.6	0.894	0	10.39734	No
SLV 12	-3079	1430	-106	0	0	0	0	9.1791	No, Trazione
SLV 13	-7418	-9061	-329	0.01	1055.6	0.925	0.16293	10.39734	No
SLV 14	-7418	-9061	-329	0.01	1055.6	0.925	0.16293	10.39734	No
SLV 3	-17833	-15419	334	0.025	2111.2	0.959	0.37486	10.39734	No
SLV 4	-17833	-15419	334	0.025	2111.2	0.959	0.37486	10.39734	No
SLV 1	-22228	-22419	339	0.027	2558.3	0.965	0.4059	10.39734	No
SLV 2	-22228	-22419	339	0.027	2558.3	0.965	0.4059	10.39734	No

Tabella dei coefficienti di sicurezza minimi

Stato limite	Coeff.s.	Comb.	Verifica
PF_SLU	2.037	SLU 83	Si
V_SLU	0.858	SLU 83	No
PF_SLV	0	SLV 16	No
V_SLV	0	SLV 7	No
PFFP_SLV	0	SLV 11	No
R_SLV	0	SLV 12	No

Maschio 59

Verifiche condotte secondo D.M. 17-01-18 (N.T.C.)

Dati geometrici

X ini.	Y ini.	X fin.	Y fin.	Quota i.	Quota.s	l	Sp.	h netta	h ini.	h fin.	a	a.s.,sx	a.s.,dx
-19.303	-3.254	-21.608	-3.254	L3	L4	2.305	0.28	3.68	3.68	3.68			

Caratteristiche del materiale

(Circolare 7 21-01-19 C8.5.I) Muratura in mattoni pieni e malta di calce LC2_Corti

fb	fk	fvk0	fmedio	τ0	fv0	μ	ϕ	fv,lim	E	G	FC
600000			345000	9000	20000	0.58	0.77	32500	320000000	128000000	1.2

Verifica a pressoflessione nel piano secondo D.M. 17-01-18 NTC §7.8.2.2.1 in combinazioni non sismiche, γM = 3

Comb.	Quota	N	M	σ0	Mu	c.s.	Verifica
SLU 77	2.67	-22954	-6348.16	35565	14904.26	2.348	Si
SLU 77	3.47	-21578	-2828.69	33434	14661.76	5.183	Si
SLU 81	2.67	-23183	-6428.01	35920	14936.56	2.324	Si
SLU 81	3.47	-21807	-2730.12	33789	14707.87	5.387	Si
SLU 69	2.67	-20591	-5777.01	31905	14436.69	2.499	Si
SLU 69	3.47	-19216	-2583.3	29773	14051.69	5.439	Si
SLU 79	2.67	-22762	-6300.81	35269	14875.47	2.361	Si
SLU 79	3.47	-21387	-2825.85	33137	14621.42	5.174	Si
SLU 62	2.67	-21294	-5959.87	32993	14601.3	2.45	Si
SLU 62	3.47	-19933	-2598.27	30885	14262.76	5.489	Si
SLU 74	2.67	-22658	-6289.37	35107	14859.08	2.363	Si
SLU 74	3.47	-21282	-2728.24	32975	14598.72	5.351	Si

Comb.	Quota	N	M	σ0	Mu	c.s.	Verifica
SLU 58	2.67	-20578	-5773.88	31883	14433.21	2.5	Si
SLU 58	3.47	-19216	-2593.55	29774	14051.92	5.418	Si
SLU 83	2.67	-23479	-6486.8	36379	14974.93	2.309	Si
SLU 83	3.47	-22103	-2830.57	34247	14764.09	5.216	Si
SLU 60	2.67	-20998	-5901.08	32535	14534.57	2.463	Si
SLU 60	3.47	-19637	-2497.82	30426	14178.37	5.676	Si
SLU 56	2.67	-20769	-5821.23	32180	14480.34	2.488	Si
SLU 56	3.47	-19408	-2596.39	30071	14110.48	5.435	Si

Verifica a pressoflessione nel piano secondo D.M. 17-01-18 NTC §7.8.2.2.1 in combinazioni sismiche, γM = 2

Comb.	Quota	N	M	σ0	Mu	c.s.	Verifica
SLV 12	2.67	-2335	-6870.15	0	0	0	No, e>l/2
SLV 12	3.47	-1454	-41.04	2252	1644.52	40.069	Si
SLV 1	2.67	-17963	-1579.25	27832	15986.61	10.123	Si
SLV 1	3.47	-16551	-9095.08	25644	15071.41	1.657	Si
SLV 16	2.67	-12900	-7149.49	19988	12435.6	1.739	Si
SLV 16	3.47	-12203	5396.1	18907	11887.31	2.203	Si
SLV 11	2.67	-2335	-6870.15	0	0	0	No, e>l/2
SLV 11	3.47	-1454	-41.04	2252	1644.52	40.069	Si
SLV 7	2.67	-1413	-5529.45	0	0	0	No, e>l/2
SLV 7	3.47	-331	-4460.64	0	0	0	No, e>l/2
SLV 4	2.67	-9828	-2680.5	15228	9915.47	3.699	Si
SLV 4	3.47	-8460	-9335.89	13108	8704.29	0.932	No, M>Mu
SLV 8	2.67	-1413	-5529.45	0	0	0	No, e>l/2
SLV 8	3.47	-331	-4460.64	0	0	0	No, e>l/2
SLV 2	2.67	-17963	-1579.25	27832	15986.61	10.123	Si
SLV 2	3.47	-16551	-9095.08	25644	15071.41	1.657	Si
SLV 3	2.67	-9828	-2680.5	15228	9915.47	3.699	Si
SLV 3	3.47	-8460	-9335.89	13108	8704.29	0.932	No, M>Mu
SLV 15	2.67	-12900	-7149.49	19988	12435.6	1.739	Si
SLV 15	3.47	-12203	5396.1	18907	11887.31	2.203	Si

Verifica a taglio nel piano secondo D.M. 17-01-18 (N.T.C.) §7.8.2.2.2 con rottura per scorrimento in combinazioni non sismiche, γM = 3

Comb.	Quota	N	V par	M	σ0	σN	l'	fvd	Vt scorr.	Vt fess.diag.	Vt,lim	c.s.	Verifica
SLU 60	2.67	-20998	-4082	-5901.08		32535	2.305	9894	6385			1.56	Si
SLU 60	3.47	-19637	-4082	-2497.82		30426	2.305	9612	6204			1.52	Si
SLU 83	2.67	-23479	-4399	-6486.8		36379	2.305	10406	6716			1.53	Si
SLU 83	3.47	-22103	-4399	-2830.57		34247	2.305	10122	6533			1.48	Si
SLU 53	2.67	-20473	-3911	-5762.44		31721	2.305	9785	6315			1.61	Si
SLU 53	3.47	-19112	-3911	-2495.94		29612	2.305	9504	6134			1.57	Si
SLU 62	2.67	-21294	-4030	-5959.87		32993	2.305	9955	6425			1.59	Si
SLU 62	3.47	-19933	-4030	-2598.27		30885	2.305	9673	6243			1.55	Si
SLU 77	2.67	-22954	-4229	-6348.16		35565	2.305	10298	6646			1.57	Si
SLU 77	3.47	-21578	-4229	-2828.69		33434	2.305	10013	6463			1.53	Si
SLU 79	2.67	-22762	-4173	-6300.81		35269	2.305	10258	6621			1.59	Si
SLU 79	3.47	-21387	-4173	-2825.85		33137	2.305	9974	6437			1.54	Si
SLU 66	2.67	-20295	-3873	-5718.22		31446	2.305	9748	6292			1.62	Si
SLU 66	3.47	-18920	-3873	-2482.85		29315	2.305	9464	6108			1.58	Si
SLU 81	2.67	-23183	-4452	-6428.01		35920	2.305	10345	6677			1.5	Si
SLU 81	3.47	-21807	-4452	-2730.12		33789	2.305	10061	6493			1.46	Si
SLU 74	2.67	-22658	-4281	-6289.37		35107	2.305	10236	6607			1.54	Si
SLU 74	3.47	-21282	-4281	-2728.24		32975	2.305	9952	6423			1.5	Si
SLU 64	2.67	-19808	-3870	-5612.09		30691	2.305	9648	6227			1.61	Si
SLU 64	3.47	-18432	-3870	-2379.56		28559	2.305	9363	6043			1.56	Si

Verifica a taglio nel piano secondo D.M. 17-01-18 (N.T.C.) §7.8.2.2.2 con rottura per scorrimento in combinazioni sismiche, γM = 2

Comb.	Quota	N	V par	M	σ0	σN	l'	fvd	Vt scorr.	Vt fess.diag.	Vt,lim	c.s.	Verifica
SLV 7	2.67	-1413	-2998	-5529.45		0	0	8333	0			0	No, Vu<V
SLV 7	3.47	-331	-1560	-4460.64		0	0	8333	0			0	No, Vu<V
SLV 8	2.67	-1413	-2998	-5529.45		0	0	8333	0			0	No, Vu<V
SLV 8	3.47	-331	-1560	-4460.64		0	0	8333	0			0	No, Vu<V
SLV 4	2.67	-9828	7952	-2680.5		15228	2.305	11379	7344			0.92	No, Vu<V
SLV 4	3.47	-8460	8157	-9335.89		205607	0.147	16250	669			0.08	No, Vu<V
SLV 16	2.67	-12900	-16135	-7149.49		25669	1.7949	13467	6768			0.42	No, Vu<V
SLV 16	3.47	-12203	-15432	5396.1		20452	2.1309	12424	7413			0.48	No, Vu<V
SLV 3	2.67	-9828	7952	-2680.5		15228	2.305	11379	7344			0.92	No, Vu<V
SLV 3	3.47	-8460	8157	-9335.89		205607	0.147	16250	669			0.08	No, Vu<V
SLV 11	2.67	-2335	-10224	-6870.15		0	0	8333	0			0	No, Vu<V
SLV 11	3.47	-1454	-8637	-41.04		2252	2.305	8784	5669			0.66	No, Vu<V
SLV 15	2.67	-12900	-16135	-7149.49		25669	1.7949	13467	6768			0.42	No, Vu<V
SLV 15	3.47	-12203	-15432	5396.1		20452	2.1309	12424	7413			0.48	No, Vu<V
SLV 14	2.67	-21035	-13975	-6048.23		32592	2.305	14852	9585			0.69	No, Vu<V
SLV 14	3.47	-20293	-14180	5636.91		31443	2.305	14622	9437			0.67	No, Vu<V
SLV 13	2.67	-21035	-13975	-6048.23		32592	2.305	14852	9585			0.69	No, Vu<V
SLV 13	3.47	-20293	-14180	5636.91		31443	2.305	14622	9437			0.67	No, Vu<V
SLV 12	2.67	-2335	-10224	-6870.15		0	0	8333	0			0	No, Vu<V
SLV 12	3.47	-1454	-8637	-41.04		2252	2.305	8784	5669			0.66	No, Vu<V

Verifica a pressoflessione fuori piano D.M. 17-01-18 (N.T.C.)

quota 2.51 Wa 0.05 denominatore 8 γM = 2

Comb.	fd	Sa	σ0	N	M	Mc	Coeff.s.	Verifica
SLV 7	143750	0.3	0	-413	200.05	0	0	No, e>t/2
SLV 11	143750	0.3	0	179	200.05	0	0	No, Trazione
SLV 8	143750	0.3	0	-413	200.05	0	0	No, e>t/2
SLV 12	143750	0.3	0	179	200.05	0	0	No, Trazione
SLV 16	143750	0.3	12907	-8330	200.05	1043.03	5.21	Si
SLV 15	143750	0.3	12907	-8330	200.05	1043.03	5.21	Si
SLV 4	143750	0.3	15966	-10305	200.05	1254.14	6.27	Si
SLV 3	143750	0.3	15966	-10305	200.05	1254.14	6.27	Si
SLV 13	143750	0.3	25126	-16216	200.05	1803.44	9.02	Si

Comb.	fd	Sa	σ0	N	M	Mc	Coeff.s.	Verifica
SLV 14	143750	0.3	25126	-16216	200.05	1803.44	9.02	Si

Verifica dei meccanismi locali di collasso con analisi cinematica lineare

forza di aggancio al piano = 0 quota mezzeria = 2.51 Wa = 0.05 Ta = 0.0808

Comb.	N top	N base	V orto	α0	M*	e*	a0*	aLim	Verifica
SLV 8	-3416	2267	-160	0	0	0	0	9.1791	No, Trazione
SLV 11	-3082	3712	-177	0	0	0	0	9.1791	No, Trazione
SLV 7	-3416	2267	-160	0	0	0	0	9.1791	No, Trazione
SLV 12	-3082	3712	-177	0	0	0	0	9.1791	No, Trazione
SLV 5	-20408	-25396	201	0.033	2412.6	0.959	0.49609	9.1791	No
SLV 6	-20408	-25396	201	0.033	2412.6	0.959	0.49609	9.1791	No
SLV 1	-14850	-17401	94	0.037	1848	0.948	0.57181	10.39734	No
SLV 2	-14850	-17401	94	0.037	1848	0.948	0.57181	10.39734	No
SLV 9	-20074	-23950	184	0.033	2378.7	0.958	0.5065	9.1791	No
SLV 10	-20074	-23950	184	0.033	2378.7	0.958	0.5065	9.1791	No

Tabella dei coefficienti di sicurezza minimi

Stato limite	Coeff.s.	Comb.	Verifica
PF_SLU	2.309	SLU 83	Si
V_SLU	1.459	SLU 81	Si
PF_SLV	0	SLV 7	No
V_SLV	0	SLV 7	No
PFFP_SLV	0	SLV 12	No
R_SLV	0	SLV 12	No

Maschio 60

Verifiche condotte secondo D.M. 17-01-18 (N.T.C.)

Dati geometrici

X ini.	Y ini.	X fin.	Y fin.	Quota i.	Quota.s	l	Sp.	h netta	h ini.	h fin.	a	a.s.,sx	a.s.,dx
-18.275	-3.254	-18.803	-3.254	L3	L4	0.529	0.28	3.68	3.68	3.68			

Caratteristiche del materiale

(Circolare 7 21-01-19 C8.5.I) Muratura in mattoni pieni e malta di calce LC2_Corti

fb	fk	fvk0	fmedio	τ0	fv0	μ	ϕ	fv,lim	E	G	FC
600000			345000	9000	20000	0.58	0.77	32500	320000000	128000000	1.2

Verifica a pressoflessione nel piano secondo D.M. 17-01-18 NTC §7.8.2.2.1 in combinazioni non sismiche, γM = 3

Comb.	Quota	N	M	σ0	Mu	c.s.	Verifica
SLU 77	2.67	-11376	-326.89	76841	170.48	0.522	No, M>Mu
SLU 77	3.47	-12050	423.75	81395	2.46	0.006	No, M>Mu
SLU 84	2.67	-11555	-232.93	78051	127.77	0.549	No, M>Mu
SLU 84	3.47	-12113	375.8	81821	0	0	No, Rottura per schiacciamento
SLU 80	2.67	-11240	-215.9	75920	202.02	0.936	No, M>Mu
SLU 80	3.47	-11752	355	79381	79.22	0.223	No, M>Mu
SLU 79	2.67	-11301	-322.5	76333	187.98	0.583	No, M>Mu
SLU 79	3.47	-11969	415.68	80844	23.87	0.057	No, M>Mu
SLU 82	2.67	-11392	-236.38	76951	166.63	0.705	No, M>Mu
SLU 82	3.47	-11945	381.36	80686	29.95	0.079	No, M>Mu
SLU 83	2.67	-11616	-339.53	78464	112.89	0.332	No, M>Mu
SLU 83	3.47	-12330	436.49	83284	0	0	No, Rottura per schiacciamento
SLU 75	2.67	-11152	-223.74	75328	221.87	0.992	No, M>Mu
SLU 75	3.47	-11666	368.63	78797	100.75	0.273	No, M>Mu
SLU 81	2.67	-11453	-342.98	77364	152.18	0.444	No, M>Mu
SLU 81	3.47	-12162	442.05	82148	0	0	No, Rottura per schiacciamento
SLU 78	2.67	-11315	-220.29	76428	184.72	0.839	No, M>Mu
SLU 78	3.47	-11834	363.07	79933	58.59	0.161	No, M>Mu
SLU 74	2.67	-11213	-330.34	75741	208.06	0.63	No, M>Mu
SLU 74	3.47	-11882	429.31	80260	46.23	0.108	No, M>Mu

Verifica a pressoflessione nel piano secondo D.M. 17-01-18 NTC §7.8.2.2.1 in combinazioni sismiche, γM = 2

Comb.	Quota	N	M	σ0	Mu	c.s.	Verifica
SLV 2	2.67	-11162	743.08	75398	1130.01	1.521	Si
SLV 2	3.47	-11216	-1271	75763	1126.62	0.886	No, M>Mu
SLV 4	2.67	-8761	618.49	59181	1194.37	1.931	Si
SLV 4	3.47	-8868	-1215.67	59901	1195.09	0.983	No, M>Mu
SLV 11	2.67	-2993	-712.74	20220	660.41	0.927	No, M>Mu
SLV 11	3.47	-3612	858.22	24398	764.21	0.89	No, M>Mu
SLV 13	2.67	-6597	-1081.35	44564	1108.02	1.025	Si
SLV 13	3.47	-7345	1820.31	49611	1153.31	0.634	No, M>Mu
SLV 1	2.67	-11162	743.08	75398	1130.01	1.521	Si
SLV 1	3.47	-11216	-1271	75763	1126.62	0.886	No, M>Mu
SLV 16	2.67	-4197	-1205.94	0	0	0	No, e>l/2
SLV 16	3.47	-4996	1875.63	0	0	0	No, e>l/2
SLV 12	2.67	-2993	-712.74	20220	660.41	0.927	No, M>Mu
SLV 12	3.47	-3612	858.22	24398	764.21	0.89	No, M>Mu
SLV 14	2.67	-6597	-1081.35	44564	1108.02	1.025	Si
SLV 14	3.47	-7345	1820.31	49611	1153.31	0.634	No, M>Mu
SLV 15	2.67	-4197	-1205.94	0	0	0	No, e>l/2
SLV 15	3.47	-4996	1875.63	0	0	0	No, e>l/2
SLV 3	2.67	-8761	618.49	59181	1194.37	1.931	Si
SLV 3	3.47	-8868	-1215.67	59901	1195.09	0.983	No, M>Mu

Verifica a taglio nel piano secondo D.M. 17-01-18 (N.T.C.) §7.8.2.2.2 con rottura per scorrimento in combinazioni non sismiche, γM = 3

Comb.	Quota	N	V par	M	σ0	σN	l'	fvd	Vt scorr.	Vt fess.diag.	Vt,lim	c.s.	Verifica
SLU 74	2.67	-11213	-1058	-330.34		75741	0.5287	10833	1604			1.52	Si
SLU 74	3.47	-11882	-1058	429.31		80260	0.5287	10833	1604			1.52	Si
SLU 79	2.67	-11301	-1031	-322.5		76333	0.5287	10833	1604			1.56	Si
SLU 79	3.47	-11969	-1031	415.68		80844	0.5287	10833	1604			1.56	Si
SLU 83	2.67	-11616	-1083	-339.53		78464	0.5287	10833	1604			1.48	Si
SLU 83	3.47	-12330	-1084	436.49		83284	0.5287	10833	1604			1.48	Si
SLU 53	2.67	-10197	-959	-300.06		68878	0.5287	10833	1604			1.67	Si
SLU 53	3.47	-10771	-959	389.27		72753	0.5287	10833	1604			1.67	Si
SLU 66	2.67	-10097	-960	-298.68		68202	0.5287	10833	1604			1.67	Si
SLU 66	3.47	-10647	-961	393.75		71916	0.5287	10833	1604			1.67	Si
SLU 64	2.67	-9859	-955	-297.74		66595	0.5287	10833	1604			1.68	Si
SLU 64	3.47	-10397	-955	391.24		70228	0.5287	10833	1604			1.68	Si
SLU 77	2.67	-11376	-1047	-326.89		76841	0.5287	10833	1604			1.53	Si
SLU 77	3.47	-12050	-1048	423.75		81395	0.5287	10833	1604			1.53	Si
SLU 81	2.67	-11453	-1094	-342.98		77364	0.5287	10833	1604			1.47	Si
SLU 81	3.47	-12162	-1095	442.05		82148	0.5287	10833	1604			1.47	Si
SLU 60	2.67	-10437	-995	-312.7		70501	0.5287	10833	1604			1.61	Si
SLU 60	3.47	-11050	-996	402.01		74642	0.5287	10833	1604			1.61	Si
SLU 62	2.67	-10600	-985	-309.25		71601	0.5287	10833	1604			1.63	Si
SLU 62	3.47	-11218	-985	396.45		75778	0.5287	10833	1604			1.63	Si

Verifica a taglio nel piano secondo D.M. 17-01-18 (N.T.C.) §7.8.2.2.2 con rottura per scorrimento in combinazioni sismiche, γM = 2

Comb.	Quota	N	V par	M	σ0	σN	l'	fvd	Vt scorr.	Vt fess.diag.	Vt,lim	c.s.	Verifica
SLV 16	2.67	-4197	-4104	-1205.94		0	0	8333	0			0	No, Vu<V
SLV 16	3.47	-4996	-4241	1875.63		0	0	8333	0			0	No, Vu<V
SLV 2	2.67	-11162	2623	743.08		75398	0.5287	16250	2406			0.92	No, Vu<V
SLV 2	3.47	-11216	2760	-1271		88400	0.4531	16250	2062			0.75	No, Vu<V
SLV 12	2.67	-2993	-2318	-712.74		135688	0.0788	16250	358			0.15	No, Vu<V
SLV 12	3.47	-3612	-2318	858.22		160693	0.0803	16250	365			0.16	No, Vu<V
SLV 15	2.67	-4197	-4104	-1205.94		0	0	8333	0			0	No, Vu<V
SLV 15	3.47	-4996	-4241	1875.63		0	0	8333	0			0	No, Vu<V
SLV 11	2.67	-2993	-2318	-712.74		135688	0.0788	16250	358			0.15	No, Vu<V
SLV 11	3.47	-3612	-2318	858.22		160693	0.0803	16250	365			0.16	No, Vu<V
SLV 13	2.67	-6597	-3728	-1081.35		78180	0.3014	16250	1371			0.37	No, Vu<V
SLV 13	3.47	-7345	-3894	1820.31		529130	0.0496	16250	226			0.06	No, Vu<V
SLV 1	2.67	-11162	2623	743.08		75398	0.5287	16250	2406			0.92	No, Vu<V
SLV 1	3.47	-11216	2760	-1271		88400	0.4531	16250	2062			0.75	No, Vu<V
SLV 14	2.67	-6597	-3728	-1081.35		78180	0.3014	16250	1371			0.37	No, Vu<V
SLV 14	3.47	-7345	-3894	1820.31		529130	0.0496	16250	226			0.06	No, Vu<V
SLV 4	2.67	-8761	2247	618.49		59181	0.5287	16250	2406			1.07	Si
SLV 4	3.47	-8868	2412	-1215.67		82944	0.3818	16250	1737			0.72	No, Vu<V
SLV 3	2.67	-8761	2247	618.49		59181	0.5287	16250	2406			1.07	Si
SLV 3	3.47	-8868	2412	-1215.67		82944	0.3818	16250	1737			0.72	No, Vu<V

Verifica a pressoflessione fuori piano D.M. 17-01-18 (N.T.C.)

quota 2.51 Wa 0.05 denominatore 8 γM = 2

Comb.	fd	Sa	σ0	N	M	Mc	Coeff.s.	Verifica
SLV 12	143750	0.3	20230	-2995	45.89	349.88	7.62	Si
SLV 11	143750	0.3	20230	-2995	45.89	349.88	7.62	Si
SLV 8	143750	0.3	22362	-3311	45.89	378.66	8.25	Si
SLV 7	143750	0.3	22362	-3311	45.89	378.66	8.25	Si
SLV 15	143750	0.3	32008	-4739	45.89	489.62	10.67	Si
SLV 16	143750	0.3	32008	-4739	45.89	489.62	10.67	Si
SLV 3	143750	0.3	39113	-5790	45.89	551.16	12.01	Si
SLV 4	143750	0.3	39113	-5790	45.89	551.16	12.01	Si
SLV 13	143750	0.3	44234	-6549	45.89	584.91	12.75	Si
SLV 14	143750	0.3	44234	-6549	45.89	584.91	12.75	Si

Verifica dei meccanismi locali di collasso con analisi cinematica lineare

forza di aggancio al piano = 0 quota mezzeria = 2.51 Wa = 0.05 Ta = 0.0808

Comb.	N top	N base	V orto	α0	M*	e*	a0*	aLim	Verifica
SLV 11	-1019	-1848	-81	0	183.7	0.901	0	9.1791	No
SLV 7	-1217	-1632	-130	0	203.2	0.907	0	9.1791	No
SLV 4	-1915	-2833	-122	0	273	0.925	0	10.39734	No
SLV 12	-1019	-1848	-81	0	183.7	0.901	0	9.1791	No
SLV 8	-1217	-1632	-130	0	203.2	0.907	0	9.1791	No
SLV 3	-1915	-2833	-122	0	273	0.925	0	10.39734	No
SLV 13	-1658	-4800	97	0.002	247.2	0.919	0.02722	10.39734	No
SLV 14	-1658	-4800	97	0.002	247.2	0.919	0.02722	10.39734	No
SLV 10	-2357	-6002	105	0.008	317.6	0.933	0.11931	9.1791	No
SLV 9	-2357	-6002	105	0.008	317.6	0.933	0.11931	9.1791	No

Tabella dei coefficienti di sicurezza minimi

Stato limite	Coeff.s.	Comb.	Verifica
PF_SLU	0	SLU 81	No
V_SLU	1.465	SLU 81	Si
PF_SLV	0	SLV 15	No
V_SLV	0	SLV 15	No
PFFP_SLV	7.625	SLV 11	Si
R_SLV	0	SLV 3	No

Maschio 61

Verifiche condotte secondo D.M. 17-01-18 (N.T.C.)

Dati geometrici

X ini.	Y ini.	X fin.	Y fin.	Quota i.	Quota.s	l	Sp.	h netta	h ini.	h fin.	a	a.s.,sx	a.s.,dx
-19.687	5.798	-19.687	6.536	L3	L4	0.738	0.28	3.68	3.68	3.68			

Caratteristiche del materiale

(Circolare 7 21-01-19 C8.5.I) Muratura in mattoni pieni e malta di calce LC2_Corti

fb	fk	fvk0	fmedio	τ0	fv0	μ	ϕ	fv,lim	E	G	FC
600000			345000	9000	20000	0.58	0.77	32500	320000000	128000000	1.2

Verifica a pressoflessione nel piano secondo D.M. 17-01-18 NTC §7.8.2.2.1 in combinazioni non sismiche, γM = 3

Comb.	Quota	N	M	σ0	Mu	c.s.	Verifica
SLU 57	0.67	-18592	-203.58	89989	0	0	No, Rottura per schiacciamento
SLU 57	4.35	-9021	119.98	43662	1544.18	12.87	Si
SLU 58	0.67	-18410	-204.37	89108	0	0	No, Rottura per schiacciamento
SLU 58	4.35	-8921	119.69	43178	1546.62	12.922	Si
SLU 62	0.67	-19014	-211.19	92030	0	0	No, Rottura per schiacciamento
SLU 62	4.35	-9179	121.84	44427	1539.43	12.634	Si
SLU 56	0.67	-18592	-205.71	89988	0	0	No, Rottura per schiacciamento
SLU 56	4.35	-9026	119.99	43690	1544.03	12.868	Si
SLU 63	0.67	-19014	-209.05	92031	0	0	No, Rottura per schiacciamento
SLU 63	4.35	-9173	121.83	44399	1539.63	12.637	Si
SLU 60	0.67	-18802	-206.38	91005	0	0	No, Rottura per schiacciamento
SLU 60	4.35	-9018	116.15	43651	1544.24	13.295	Si
SLU 61	0.67	-18802	-204.24	91006	0	0	No, Rottura per schiacciamento
SLU 61	4.35	-9013	116.15	43623	1544.39	13.297	Si
SLU 55	0.67	-18199	-196	88085	0	0	No, Rottura per schiacciamento
SLU 55	4.35	-8751	113.98	42356	1549.75	13.596	Si
SLU 42	0.67	-17632	-203.22	85342	0	0	No, Rottura per schiacciamento
SLU 42	4.35	-8623	121.04	41737	1551.28	12.816	Si
SLU 59	0.67	-18410	-202.23	89110	0	0	No, Rottura per schiacciamento
SLU 59	4.35	-8915	119.68	43150	1546.74	12.924	Si

Verifica a pressoflessione nel piano secondo D.M. 17-01-18 NTC §7.8.2.2.1 in combinazioni sismiche, γM = 2

Comb.	Quota	N	M	σ0	Mu	c.s.	Verifica
SLV 5	0.67	-5933	-996	28718	1674.47	1.681	Si
SLV 5	4.35	-3056	408	14793	991.04	2.429	Si
SLV 11	0.67	-21924	694.06	106117	1063.83	1.533	Si
SLV 11	4.35	-10283	-241.7	49771	2248.37	9.302	Si
SLV 16	0.67	-15706	749.61	76020	2189.36	2.921	Si
SLV 16	4.35	-7333	-295.6	35493	1919.51	6.494	Si
SLV 9	0.67	-5524	-569.36	26735	1591.94	2.796	Si
SLV 9	4.35	-2779	222.53	13451	912.39	4.1	Si
SLV 15	0.67	-15706	749.61	76020	2189.36	2.921	Si
SLV 15	4.35	-7333	-295.6	35493	1919.51	6.494	Si
SLV 10	0.67	-5524	-569.36	26735	1591.94	2.796	Si
SLV 10	4.35	-2779	222.53	13451	912.39	4.1	Si
SLV 12	0.67	-21924	694.06	106117	1063.83	1.533	Si
SLV 12	4.35	-10283	-241.7	49771	2248.37	9.302	Si
SLV 1	0.67	-12151	-1051.54	58815	2325.1	2.211	Si
SLV 1	4.35	-6006	461.9	29071	1688.65	3.656	Si
SLV 6	0.67	-5933	-996	28718	1674.47	1.681	Si
SLV 6	4.35	-3056	408	14793	991.04	2.429	Si
SLV 2	0.67	-12151	-1051.54	58815	2325.1	2.211	Si
SLV 2	4.35	-6006	461.9	29071	1688.65	3.656	Si

Verifica a taglio nel piano secondo D.M. 17-01-18 (N.T.C.) §7.8.2.2.2 con rottura per scorrimento in combinazioni non sismiche, γM = 3

Comb.	Quota	N	V par	M	σ0	σN	l'	fvd	Vt scorr.	Vt fess.diag.	Vt,lim	c.s.	Verifica
SLU 79	0.67	-20253	879	-230.37		98031	0.7379	10833	2238			2.55	Si
SLU 79	4.35	-9878	-1046	135.5		47811	0.7379	10833	2238			2.14	Si
SLU 77	0.67	-20435	892	-231.71		98911	0.7379	10833	2238			2.51	Si
SLU 77	4.35	-9984	-1050	135.8		48323	0.7379	10833	2238			2.13	Si
SLU 80	0.67	-20254	884	-228.23		98033	0.7379	10833	2238			2.53	Si
SLU 80	4.35	-9872	-1043	135.49		47783	0.7379	10833	2238			2.15	Si
SLU 74	0.67	-20223	902	-226.9		97886	0.7379	10833	2238			2.48	Si
SLU 74	4.35	-9823	-1008	130.11		47547	0.7379	10833	2238			2.22	Si
SLU 84	0.67	-20857	918	-235.05		100954	0.7379	10833	2238			2.44	Si
SLU 84	4.35	-10130	-1057	137.64		49032	0.7379	10833	2238			2.12	Si
SLU 78	0.67	-20435	897	-229.58		98912	0.7379	10833	2238			2.49	Si
SLU 78	4.35	-9978	-1047	135.79		48295	0.7379	10833	2238			2.14	Si
SLU 75	0.67	-20224	907	-224.77		97887	0.7379	10833	2238			2.47	Si
SLU 75	4.35	-9818	-1005	130.1		47519	0.7379	10833	2238			2.23	Si
SLU 81	0.67	-20645	922	-232.37		99927	0.7379	10833	2238			2.43	Si
SLU 81	4.35	-9976	-1018	131.96		48284	0.7379	10833	2238			2.2	Si
SLU 82	0.67	-20645	928	-230.24		99929	0.7379	10833	2238			2.41	Si
SLU 82	4.35	-9970	-1015	131.95		48256	0.7379	10833	2238			2.21	Si
SLU 83	0.67	-20857	912	-237.18		100953	0.7379	10833	2238			2.45	Si
SLU 83	4.35	-10136	-1061	137.65		49060	0.7379	10833	2238			2.11	Si

Verifica a taglio nel piano secondo D.M. 17-01-18 (N.T.C.) §7.8.2.2.2 con rottura per scorrimento in combinazioni sismiche, γM = 2

Comb.	Quota	N	V par	M	σ0	σN	I'	fvd	Vt scorr.	Vt fess.diag.	Vt,lim	c.s.	Verifica
SLV 2	0.67	-12151	-3994	-1051.54		58815	0.7379	16250	3357			0.84	No, Vu<V
SLV 2	4.35	-6006	-4113	461.9		29071	0.7379	14148	2923			0.71	No, Vu<V
SLV 6	0.67	-5933	-4382	-996		35130	0.6032	15359	2594			0.59	No, Vu<V
SLV 6	4.35	-3056	-4066	408		15454	0.7063	11424	2259			0.56	No, Vu<V
SLV 12	0.67	-21924	5685	694.06		106117	0.7379	16250	3357			0.59	No, Vu<V
SLV 12	4.35	-10283	2767	-241.7		49771	0.7379	16250	3357			1.21	Si
SLV 16	0.67	-15706	5297	749.61		76020	0.7379	16250	3357			0.63	No, Vu<V
SLV 16	4.35	-7333	2813	-295.6		35493	0.7379	15432	3188			1.13	Si
SLV 11	0.67	-21924	5685	694.06		106117	0.7379	16250	3357			0.59	No, Vu<V
SLV 11	4.35	-10283	2767	-241.7		49771	0.7379	16250	3357			1.21	Si
SLV 5	0.67	-5933	-4382	-996		35130	0.6032	15359	2594			0.59	No, Vu<V
SLV 5	4.35	-3056	-4066	408		15454	0.7063	11424	2259			0.56	No, Vu<V
SLV 9	0.67	-5524	-2315	-569.36		26735	0.7379	13680	2826			1.22	Si
SLV 9	4.35	-2779	-2459	222.53		13451	0.7379	11024	2277			0.93	No, Vu<V
SLV 1	0.67	-12151	-3994	-1051.54		58815	0.7379	16250	3357			0.84	No, Vu<V
SLV 1	4.35	-6006	-4113	461.9		29071	0.7379	14148	2923			0.71	No, Vu<V
SLV 10	0.67	-5524	-2315	-569.36		26735	0.7379	13680	2826			1.22	Si
SLV 10	4.35	-2779	-2459	222.53		13451	0.7379	11024	2277			0.93	No, Vu<V
SLV 15	0.67	-15706	5297	749.61		76020	0.7379	16250	3357			0.63	No, Vu<V
SLV 15	4.35	-7333	2813	-295.6		35493	0.7379	15432	3188			1.13	Si

Verifica a pressoflessione fuori piano D.M. 17-01-18 (N.T.C.)

quota 2.51 Wa 0.05 denominatore 8 γM = 2

Comb.	fd	Sa	σ0	N	M	Mc	Coeff.s.	Verifica
SLV 10	143750	0.3	15222	-3145	65.53	385.44	5.88	Si
SLV 9	143750	0.3	15222	-3145	65.53	385.44	5.88	Si
SLV 5	143750	0.3	17159	-3545	65.53	426.61	6.51	Si
SLV 6	143750	0.3	17159	-3545	65.53	426.61	6.51	Si
SLV 13	143750	0.3	31245	-6455	65.53	672.64	10.26	Si
SLV 14	143750	0.3	31245	-6455	65.53	672.64	10.26	Si
SLV 1	143750	0.3	37700	-7789	65.53	753.99	11.51	Si
SLV 2	143750	0.3	37700	-7789	65.53	753.99	11.51	Si
SLV 16	143750	0.3	46915	-9693	65.53	835.96	12.76	Si
SLV 15	143750	0.3	46915	-9693	65.53	835.96	12.76	Si

Verifica dei meccanismi locali di collasso con analisi cinematica lineare

forza di aggancio al piano = 0 quota mezzeria = 2.51 Wa = 0.05 Ta = 0.0808

Comb.	N top	N base	V orto	α0	M*	e*	a0*	aLim	Verifica
SLV 5	-3056	-5933	-234	0	419.7	0.93	0	9.1791	No
SLV 9	-2779	-5524	-172	0	391.7	0.927	0	9.1791	No
SLV 10	-2779	-5524	-172	0	391.7	0.927	0	9.1791	No
SLV 6	-3056	-5933	-234	0	419.7	0.93	0	9.1791	No
SLV 2	-6006	-12151	-186	0.014	718.8	0.956	0.21553	10.39734	No
SLV 1	-6006	-12151	-186	0.014	718.8	0.956	0.21553	10.39734	No
SLV 16	-7333	-15706	124	0.026	853.7	0.962	0.38993	10.39734	No
SLV 15	-7333	-15706	124	0.026	853.7	0.962	0.38993	10.39734	No
SLV 12	-10283	-21924	172	0.025	1154	0.972	0.36931	9.1791	No
SLV 11	-10283	-21924	172	0.025	1154	0.972	0.36931	9.1791	No

Tabella dei coefficienti di sicurezza minimi

Stato limite	Coeff.s.	Comb.	Verifica
PF_SLU	0	SLU 32	No
V_SLU	2.11	SLU 83	Si
PF_SLV	1.533	SLV 11	Si
V_SLV	0.556	SLV 5	No
PFFP_SLV	5.882	SLV 9	Si
R_SLV	0	SLV 5	No

Maschio 62

Verifiche condotte secondo D.M. 17-01-18 (N.T.C.)

Dati geometrici

X ini.	Y ini.	X fin.	Y fin.	Quota i.	Quota.s	l	Sp.	h netta	h ini.	h fin.	a	a.s.,sx	a.s.,dx
-19.595	1.046	-19.595	1.283	L3	L4	0.236	0.14	3.68	3.68	3.68			

Caratteristiche del materiale

(Circolare 7 21-01-19 C8.5.I) Muratura in mattoni pieni e malta di calce LC2_Corti

fb	fk	fvk0	fmedio	τ0	fv0	μ	ϕ	fv,lim	E	G	FC
600000			345000	9000	20000	0.58	0.77	32500	320000000	128000000	1.2

Verifica a pressoflessione nel piano secondo D.M. 17-01-18 NTC §7.8.2.2.1 in combinazioni non sismiche, γM = 3

Comb.	Quota	N	M	σ0	Mu	c.s.	Verifica
SLU 60	0.67	-847	-83.85	25592	68.72	0.82	No, M>Mu
SLU 60	2.77	-2809	68.2	84829	0	0	No, Rottura per schiacciamento
SLU 53	0.67	-831	-82.77	25092	67.98	0.821	No, M>Mu
SLU 53	2.77	-2768	68.24	83588	0	0	No, Rottura per schiacciamento
SLU 59	0.67	-835	-83.11	25230	68.18	0.82	No, M>Mu
SLU 59	2.77	-2756	68.16	83253	0	0	No, Rottura per schiacciamento
SLU 54	0.67	-827	-82.21	24970	67.79	0.825	No, M>Mu
SLU 54	2.77	-2729	67.46	82437	0	0	No, Rottura per schiacciamento

Comb.	Quota	N	M	σ0	Mu	c.s.	Verifica
SLU 57	0.67	-843	-83.95	25471	68.54	0.816	No, M>Mu
SLU 57	2.77	-2789	68.9	84246	0	0	No, Rottura per schiacciamento
SLU 61	0.67	-843	-83.29	25470	68.54	0.823	No, M>Mu
SLU 61	2.77	-2771	67.42	83679	0	0	No, Rottura per schiacciamento
SLU 42	0.67	-817	-79.99	24687	67.36	0.842	No, M>Mu
SLU 42	2.77	-2700	62.91	81534	0	0	No, Rottura per schiacciamento
SLU 58	0.67	-839	-83.66	25353	68.36	0.817	No, M>Mu
SLU 58	2.77	-2795	68.95	84403	0	0	No, Rottura per schiacciamento
SLU 62	0.67	-864	-85.58	26093	69.43	0.811	No, M>Mu
SLU 62	2.77	-2868	69.65	86638	0	0	No, Rottura per schiacciamento
SLU 56	0.67	-847	-84.5	25593	68.72	0.813	No, M>Mu
SLU 56	2.77	-2827	69.68	85396	0	0	No, Rottura per schiacciamento

Verifica a pressoflessione nel piano secondo D.M. 17-01-18 NTC §7.8.2.2.1 in combinazioni sismiche, γM = 2

Comb.	Quota	N	M	σ0	Mu	c.s.	Verifica
SLV 2	0.67	-384	-64.53	0	0	0	No, e>l/2
SLV 2	2.77	-3744	110.87	113082	32.99	0.298	No, M>Mu
SLV 10	0.67	-557	-100.6	0	0	0	No, e>l/2
SLV 10	2.77	-3439	150.82	103869	60.97	0.404	No, M>Mu
SLV 5	0.67	-435	-95.39	0	0	0	No, e>l/2
SLV 5	2.77	-4128	166.92	124679	0	0	No, Rottura per schiacciamento
SLV 1	0.67	-384	-64.53	0	0	0	No, e>l/2
SLV 1	2.77	-3744	110.87	113082	32.99	0.298	No, M>Mu
SLV 12	0.67	-818	-29.79	24714	77.19	2.591	Si
SLV 12	2.77	-45	-63.02	0	0	0	No, e>l/2
SLV 13	0.67	-790	-81.89	23873	75.2	0.918	No, M>Mu
SLV 13	2.77	-1447	57.18	43715	109.91	1.922	Si
SLV 11	0.67	-818	-29.79	24714	77.19	2.591	Si
SLV 11	2.77	-45	-63.02	0	0	0	No, e>l/2
SLV 9	0.67	-557	-100.6	0	0	0	No, e>l/2
SLV 9	2.77	-3439	150.82	103869	60.97	0.404	No, M>Mu
SLV 6	0.67	-435	-95.39	0	0	0	No, e>l/2
SLV 6	2.77	-4128	166.92	124679	0	0	No, Rottura per schiacciamento
SLV 14	0.67	-790	-81.89	23873	75.2	0.918	No, M>Mu
SLV 14	2.77	-1447	57.18	43715	109.91	1.922	Si

Verifica a taglio nel piano secondo D.M. 17-01-18 (N.T.C.) §7.8.2.2.2 con rottura per scorrimento in combinazioni non sismiche, γM = 3

Comb.	Quota	N	V par	M	σ0	σN	l'	fvd	Vt scorr.	Vt fess.diag.	Vt,lim	c.s.	Verifica
SLU 77	0.67	-943	-203	-93.61		118084	0.0571	10833	87			0.43	No, Vu<V
SLU 77	2.77	-3155	-218	76.13		95298	0.2365	10833	359			1.64	Si
SLU 79	0.67	-935	-201	-92.78		116800	0.0572	10833	87			0.43	No, Vu<V
SLU 79	2.77	-3122	-216	75.4		94305	0.2365	10833	359			1.66	Si
SLU 84	0.67	-956	-203	-94.14		115128	0.0593	10833	90			0.44	No, Vu<V
SLU 84	2.77	-3158	-217	75.31		95388	0.2365	10833	359			1.65	Si
SLU 75	0.67	-923	-197	-91.33		113972	0.0578	10833	88			0.44	No, Vu<V
SLU 75	2.77	-3057	-211	73.9		92339	0.2365	10833	359			1.7	Si
SLU 83	0.67	-960	-205	-94.69		116558	0.0588	10833	89			0.44	No, Vu<V
SLU 83	2.77	-3196	-220	76.09		96539	0.2365	10833	359			1.63	Si
SLU 78	0.67	-939	-201	-93.06		116595	0.0575	10833	87			0.43	No, Vu<V
SLU 78	2.77	-3117	-215	75.34		94147	0.2365	10833	359			1.66	Si
SLU 69	0.67	-848	-185	-85.11		113203	0.0535	10833	81			0.44	No, Vu<V
SLU 69	2.77	-2843	-200	71.14		85865	0.2365	10833	359			1.8	Si
SLU 80	0.67	-931	-199	-92.22		115316	0.0577	10833	88			0.44	No, Vu<V
SLU 80	2.77	-3084	-213	74.61		93154	0.2365	10833	359			1.68	Si
SLU 71	0.67	-840	-183	-84.27		111884	0.0536	10833	81			0.44	No, Vu<V
SLU 71	2.77	-2810	-197	70.41		84872	0.2365	10833	359			1.82	Si
SLU 74	0.67	-927	-199	-91.88		115451	0.0573	10833	87			0.44	No, Vu<V
SLU 74	2.77	-3095	-214	74.69		93489	0.2365	10833	359			1.67	Si

Verifica a taglio nel piano secondo D.M. 17-01-18 (N.T.C.) §7.8.2.2.2 con rottura per scorrimento in combinazioni sismiche, γM = 2

Comb.	Quota	N	V par	M	σ0	σN	l'	fvd	Vt scorr.	Vt fess.diag.	Vt,lim	c.s.	Verifica
SLV 13	0.67	-790	-143	-81.89		128527	0.0439	16250	100			0.7	No, Vu<V
SLV 13	2.77	-1447	-287	57.18		43767	0.2362	16250	537			1.87	Si
SLV 1	0.67	-384	-310	-64.53		0	0	8333	0			0	No, Vu<V
SLV 1	2.77	-3744	-211	110.87		113082	0.2365	16250	538			2.56	Si
SLV 11	0.67	-818	191	-29.79		24714	0.2365	13276	440			2.3	Si
SLV 11	2.77	-45	183	-63.02		0	0	8333	0			0	No, Vu<V
SLV 6	0.67	-435	-463	-95.39		0	0	8333	0			0	No, Vu<V
SLV 6	2.77	-4128	-476	166.92		126315	0.2334	16250	531			1.12	Si
SLV 9	0.67	-557	-413	-100.6		0	0	8333	0			0	No, Vu<V
SLV 9	2.77	-3439	-499	150.82		110068	0.2232	16250	508			1.02	Si
SLV 5	0.67	-435	-463	-95.39		0	0	8333	0			0	No, Vu<V
SLV 5	2.77	-4128	-476	166.92		126315	0.2334	16250	531			1.12	Si
SLV 10	0.67	-557	-413	-100.6		0	0	8333	0			0	No, Vu<V
SLV 10	2.77	-3439	-499	150.82		110068	0.2232	16250	508			1.02	Si
SLV 12	0.67	-818	191	-29.79		24714	0.2365	13276	440			2.3	Si
SLV 12	2.77	-45	183	-63.02		0	0	8333	0			0	No, Vu<V
SLV 14	0.67	-790	-143	-81.89		128527	0.0439	16250	100			0.7	No, Vu<V
SLV 14	2.77	-1447	-287	57.18		43767	0.2362	16250	537			1.87	Si
SLV 2	0.67	-384	-310	-64.53		0	0	8333	0			0	No, Vu<V
SLV 2	2.77	-3744	-211	110.87		113082	0.2365	16250	538			2.56	Si

Verifica a pressoflessione fuori piano D.M. 17-01-18 (N.T.C.)

quota 2.51 Wa 0.03 denominatore 8 γM = 2

Comb.	fd	Sa	σ0	N	M	Mc	Coeff.s.	Verifica
SLV 5	143750	0.3	125120	-4143	10.98	0	0	No, Rottura per schiacciamento
SLV 12	143750	0.3	0	-81	10.98	0	0	No, e>t/2
SLV 11	143750	0.3	0	-81	10.98	0	0	No, e>t/2
SLV 6	143750	0.3	125120	-4143	10.98	0	0	No, Rottura per schiacciamento
SLV 2	143750	0.3	113634	-3762	10.98	18.44	1.68	Si
SLV 1	143750	0.3	113634	-3762	10.98	18.44	1.68	Si
SLV 15	143750	0.3	13930	-461	10.98	28.6	2.61	Si
SLV 16	143750	0.3	13930	-461	10.98	28.6	2.61	Si
SLV 9	143750	0.3	104383	-3456	10.98	35.25	3.21	Si
SLV 10	143750	0.3	104383	-3456	10.98	35.25	3.21	Si

Verifica dei meccanismi locali di collasso con analisi cinematica lineare

forza di aggancio al piano = 0 quota mezzeria = 2.51 Wa = 0.03 Ta = 0.1615

Comb.	N top	N base	V orto	α0	M*	e*	a0*	aLim	Verifica
SLV 6	260	-435	4	0	0	0	0	13.74169	No, Trazione
SLV 5	260	-435	4	0	0	0	0	13.74169	No, Trazione
SLV 9	90	-557	5	0	0	0	0	13.74169	No, Trazione
SLV 10	90	-557	5	0	0	0	0	13.74169	No, Trazione
SLV 2	-276	-384	4	0.014	45.9	0.908	0.21657	13.74169	No
SLV 1	-276	-384	4	0.014	45.9	0.908	0.21657	13.74169	No
SLV 13	-844	-790	4	0.017	103.2	0.952	0.25562	13.74169	No
SLV 14	-844	-790	4	0.017	103.2	0.952	0.25562	13.74169	No
SLV 3	-907	-463	4	0.017	109.5	0.954	0.26127	13.74169	No
SLV 4	-907	-463	4	0.017	109.5	0.954	0.26127	13.74169	No

Tabella dei coefficienti di sicurezza minimi

Stato limite	Coeff.s.	Comb.	Verifica
PF_SLU	0	SLU 41	No
V_SLU	0.427	SLU 77	No
PF_SLV	0	SLV 1	No
V_SLV	0	SLV 1	No
PFFP_SLV	0	SLV 5	No
R_SLV	0	SLV 10	No

Maschio 63

Verifiche condotte secondo D.M. 17-01-18 (N.T.C.)

Dati geometrici

X ini.	Y ini.	X fin.	Y fin.	Quota i.	Quota.s	l	Sp.	h netta	h ini.	h fin.	a	a.s.,sx	a.s.,dx
-19.595	1.983	-19.595	5.658	L3	L4	3.675	0.14	3.68	3.68	3.68			

Caratteristiche del materiale

(Circolare 7 21-01-19 C8.5.I) Muratura in mattoni pieni e malta di calce LC2_Corti

fb	fk	fvk0	fmedio	τ0	fv0	μ	ϕ	fv,lim	E	G	FC
600000			345000	9000	20000	0.58	0.77	32500	320000000	128000000	1.2

Verifica a pressoflessione nel piano secondo D.M. 17-01-18 NTC §7.8.2.2.1 in combinazioni non sismiche, γM = 3

Comb.	Quota	N	M	σ0	Mu	c.s.	Verifica
SLU 80	0.67	-17829	3453.56	34654	18823.36	5.45	Si
SLU 80	2.77	-18572	6837.38	36097	19002.71	2.779	Si
SLU 78	0.67	-17985	3486.97	34958	18865.1	5.41	Si
SLU 78	2.77	-18761	6901.56	36464	19040.62	2.759	Si
SLU 77	0.67	-18045	3444.37	35073	18880.45	5.482	Si
SLU 77	2.77	-18808	6888.51	36557	19049.67	2.765	Si
SLU 79	0.67	-17889	3410.97	34770	18839.53	5.523	Si
SLU 79	2.77	-18619	6824.33	36190	19012.55	2.786	Si
SLU 83	0.67	-18368	3551.37	35701	18958.3	5.338	Si
SLU 83	2.77	-19116	6912.64	37155	19103.42	2.764	Si
SLU 84	0.67	-18308	3593.96	35585	18944.64	5.271	Si
SLU 84	2.77	-19068	6925.7	37062	19095.65	2.757	Si
SLU 74	0.67	-17811	3438.31	34618	18818.26	5.473	Si
SLU 74	2.77	-18496	6806.83	35949	18986.55	2.789	Si
SLU 81	0.67	-18134	3545.31	35246	18902.75	5.332	Si
SLU 81	2.77	-18803	6830.97	36547	19048.74	2.789	Si
SLU 82	0.67	-18074	3587.9	35130	18887.86	5.264	Si
SLU 82	2.77	-18756	6844.03	36455	19039.66	2.782	Si
SLU 75	0.67	-17751	3480.91	34502	18801.69	5.401	Si
SLU 75	2.77	-18448	6819.89	35857	18976.2	2.782	Si

Verifica a pressoflessione nel piano secondo D.M. 17-01-18 NTC §7.8.2.2.1 in combinazioni sismiche, γM = 2

Comb.	Quota	N	M	σ0	Mu	c.s.	Verifica
SLV 10	0.67	-13726	-5418.9	26679	19714.25	3.638	Si
SLV 10	2.77	-5468	10674.06	0	0	0	No, e>l/2
SLV 6	0.67	-13232	-6090.63	25720	19196.13	3.152	Si
SLV 6	2.77	-6974	8787.6	13555	11392.76	1.296	Si
SLV 14	0.67	-13424	1062.29	26092	19398.7	18.261	Si
SLV 14	2.77	-8122	9441.28	15787	12996.14	1.377	Si
SLV 5	0.67	-13232	-6090.63	25720	19196.13	3.152	Si
SLV 5	2.77	-6974	8787.6	13555	11392.76	1.296	Si
SLV 7	0.67	-10723	10187.95	20842	16342.39	1.604	Si
SLV 7	2.77	-19579	-1022.88	38055	24770.97	24.217	Si

Comb.	Quota	N	M	σ0	Mu	c.s.	Verifica
SLV 11	0.67	-11217	10859.68	21802	16932.93	1.559	Si
SLV 11	2.77	-18073	863.59	35128	23661.03	27.398	Si
SLV 8	0.67	-10723	10187.95	20842	16342.39	1.604	Si
SLV 8	2.77	-19579	-1022.88	38055	24770.97	24.217	Si
SLV 12	0.67	-11217	10859.68	21802	16932.93	1.559	Si
SLV 12	2.77	-18073	863.59	35128	23661.03	27.398	Si
SLV 13	0.67	-13424	1062.29	26092	19398.7	18.261	Si
SLV 13	2.77	-8122	9441.28	15787	12996.14	1.377	Si
SLV 9	0.67	-13726	-5418.9	26679	19714.25	3.638	Si
SLV 9	2.77	-5468	10674.06	0	0	0	No, e>l/2

Verifica a taglio nel piano secondo D.M. 17-01-18 (N.T.C.) §7.8.2.2.2 con rottura per scorrimento in combinazioni non sismiche, γM = 3

Comb.	Quota	N	V par	M	σ0	σN	l'	fvd	Vt scorr.	Vt fess.diag.	Vt,lim	c.s.	Verifica
SLU 84	0.67	-18308	390	3593.96		35585	3.6749	10300	5299			13.58	Si
SLU 84	2.77	-19068	1732	6925.7		37062	3.6749	10497	5401			3.12	Si
SLU 78	0.67	-17985	380	3486.97		34958	3.6749	10217	5256			13.85	Si
SLU 78	2.77	-18761	1702	6901.56		36464	3.6749	10417	5360			3.15	Si
SLU 77	0.67	-18045	354	3444.37		35073	3.6749	10232	5264			14.85	Si
SLU 77	2.77	-18808	1675	6888.51		36557	3.6749	10430	5366			3.2	Si
SLU 83	0.67	-18368	365	3551.37		35701	3.6749	10316	5307			14.54	Si
SLU 83	2.77	-19116	1705	6912.64		37155	3.6749	10510	5407			3.17	Si
SLU 75	0.67	-17751	365	3480.91		34502	3.6749	10156	5225			14.3	Si
SLU 75	2.77	-18448	1664	6819.89		35857	3.6749	10336	5318			3.2	Si
SLU 81	0.67	-18134	351	3545.31		35246	3.6749	10255	5276			15.04	Si
SLU 81	2.77	-18803	1668	6830.97		36547	3.6749	10429	5365			3.22	Si
SLU 76	0.67	-17555	377	3475.9		34121	3.6749	10105	5199			13.79	Si
SLU 76	2.77	-18227	1666	6764.42		35428	3.6749	10279	5289			3.17	Si
SLU 80	0.67	-17829	374	3453.56		34654	3.6749	10176	5235			13.98	Si
SLU 80	2.77	-18572	1685	6837.38		36097	3.6749	10369	5334			3.17	Si
SLU 79	0.67	-17889	349	3410.97		34770	3.6749	10192	5243			15.01	Si
SLU 79	2.77	-18619	1658	6824.33		36190	3.6749	10381	5341			3.22	Si
SLU 82	0.67	-18074	376	3587.9		35130	3.6749	10240	5268			14.01	Si
SLU 82	2.77	-18756	1695	6844.03		36455	3.6749	10416	5359			3.16	Si

Verifica a taglio nel piano secondo D.M. 17-01-18 (N.T.C.) §7.8.2.2.2 con rottura per scorrimento in combinazioni sismiche, γM = 2

Comb.	Quota	N	V par	M	σ0	σN	l'	fvd	Vt scorr.	Vt fess.diag.	Vt,lim	c.s.	Verifica
SLV 14	0.67	-13424	-6189	1062.29		26092	3.6749	13552	6972			1.13	Si
SLV 14	2.77	-8122	-7847	9441.28		28647	2.0252	14063	3987			0.51	No, Vu<V
SLV 13	0.67	-13424	-6189	1062.29		26092	3.6749	13552	6972			1.13	Si
SLV 13	2.77	-8122	-7847	9441.28		28647	2.0252	14063	3987			0.51	No, Vu<V
SLV 9	0.67	-13726	-14939	-5418.9		26679	3.6749	13669	7033			0.47	No, Vu<V
SLV 9	2.77	-5468	-13496	10674.06		0	0	8333	0			0	No, Vu<V
SLV 8	0.67	-10723	15339	10187.95		28772	2.6621	14088	5250			0.34	No, Vu<V
SLV 8	2.77	-19579	15662	-1022.88		38055	3.6749	15944	8203			0.52	No, Vu<V
SLV 5	0.67	-13232	-13721	-6090.63		25720	3.6749	13477	6934			0.51	No, Vu<V
SLV 5	2.77	-6974	-10492	8787.6		28758	1.7322	14085	3416			0.33	No, Vu<V
SLV 6	0.67	-13232	-13721	-6090.63		25720	3.6749	13477	6934			0.51	No, Vu<V
SLV 6	2.77	-6974	-10492	8787.6		28758	1.7322	14085	3416			0.33	No, Vu<V
SLV 11	0.67	-11217	14121	10859.68		30722	2.6079	14478	5286			0.37	No, Vu<V
SLV 11	2.77	-18073	12658	863.59		35128	3.6749	15359	7902			0.62	No, Vu<V
SLV 7	0.67	-10723	15339	10187.95		28772	2.6621	14088	5250			0.34	No, Vu<V
SLV 7	2.77	-19579	15662	-1022.88		38055	3.6749	15944	8203			0.52	No, Vu<V
SLV 10	0.67	-13726	-14939	-5418.9		26679	3.6749	13669	7033			0.47	No, Vu<V
SLV 10	2.77	-5468	-13496	10674.06		0	0	8333	0			0	No, Vu<V
SLV 12	0.67	-11217	14121	10859.68		30722	2.6079	14478	5286			0.37	No, Vu<V
SLV 12	2.77	-18073	12658	863.59		35128	3.6749	15359	7902			0.62	No, Vu<V

Verifica a pressoflessione fuori piano D.M. 17-01-18 (N.T.C.)

quota 2.51 Wa 0.03 denominatore 8 γM = 2

Comb.	fd	Sa	σ0	N	M	Mc	Coeff.s.	Verifica
SLV 9	143750	0.3	12939	-6657	170.6	416.63	2.44	Si
SLV 10	143750	0.3	12939	-6657	170.6	416.63	2.44	Si
SLV 6	143750	0.3	15687	-8071	170.6	492.42	2.89	Si
SLV 5	143750	0.3	15687	-8071	170.6	492.42	2.89	Si
SLV 13	143750	0.3	16891	-8690	170.6	524.22	3.07	Si
SLV 14	143750	0.3	16891	-8690	170.6	524.22	3.07	Si
SLV 15	143750	0.3	23027	-11847	170.6	673.01	3.95	Si
SLV 16	143750	0.3	23027	-11847	170.6	673.01	3.95	Si
SLV 1	143750	0.3	26051	-13403	170.6	738.18	4.33	Si
SLV 2	143750	0.3	26051	-13403	170.6	738.18	4.33	Si

Verifica dei meccanismi locali di collasso con analisi cinematica lineare

forza di aggancio al piano = 0 quota mezzeria = 2.51 Wa = 0.03 Ta = 0.1615

Comb.	N top	N base	V orto	α0	M*	e*	a0*	aLim	Verifica
SLV 14	-9985	-13424	-36	0.019	1285.3	0.941	0.28946	13.74169	No
SLV 13	-9985	-13424	-36	0.019	1285.3	0.941	0.28946	13.74169	No
SLV 3	-14585	-11025	32	0.019	1752.1	0.955	0.29009	13.74169	No
SLV 4	-14585	-11025	32	0.019	1752.1	0.955	0.29009	13.74169	No
SLV 8	-14946	-10723	24	0.02	1788.8	0.956	0.29703	13.74169	No
SLV 7	-14946	-10723	24	0.02	1788.8	0.956	0.29703	13.74169	No
SLV 10	-9625	-13726	-28	0.019	1248.8	0.94	0.30053	13.74169	No
SLV 9	-9625	-13726	-28	0.019	1248.8	0.94	0.30053	13.74169	No
SLV 15	-11284	-12671	-25	0.02	1416.9	0.946	0.30066	13.74169	No
SLV 16	-11284	-12671	-25	0.02	1416.9	0.946	0.30066	13.74169	No

Tabella dei coefficienti di sicurezza minimi

Stato limite	Coeff.s.	Comb.	Verifica
PF_SLU	2.757	SLU 84	Si
V_SLU	3.118	SLU 84	Si

Stato limite	Coeff.s.	Comb.	Verifica
PF_SLV	0	SLV 9	No
V_SLV	0	SLV 9	No
PFFP_SLV	2.442	SLV 9	Si
R_SLV	0.021	SLV 13	No

Maschio 64

Verifiche condotte secondo D.M. 17-01-18 (N.T.C.)

Dati geometrici

X ini.	Y ini.	X fin.	Y fin.	Quota i.	Quota.s	l	Sp.	h netta	h ini.	h fin.	a	a.s.,sx	a.s.,dx
-16.2	-3.254	-17.275	-3.254	L3	L4	1.075	0.28	3.68	3.68	3.68			

Caratteristiche del materiale

(Circolare 7 21-01-19 C8.5.I) Muratura in mattoni pieni e malta di calce LC2_Corti

fb	fk	fvk0	fmedio	τ0	fv0	μ	ϕ	fv,lim	E	G	FC
600000			345000	9000	20000	0.58	0.77	32500	320000000	128000000	1.2

Verifica a pressoflessione nel piano secondo D.M. 17-01-18 NTC §7.8.2.2.1 in combinazioni non sismiche, γM = 3

Comb.	Quota	N	M	σ0	Mu	c.s.	Verifica
SLU 77	1.57	-18405	2682.34	61147	2466.67	0.92	No, M>Mu
SLU 77	3.47	-14653	1130.71	48682	3169.01	2.803	Si
SLU 78	1.57	-18306	2512.17	60820	2493	0.992	No, M>Mu
SLU 78	3.47	-14471	1138.82	48079	3187.36	2.799	Si
SLU 74	1.57	-18135	2631.81	60249	2537.89	0.964	No, M>Mu
SLU 74	3.47	-14461	1122.52	48045	3188.34	2.84	Si
SLU 80	1.57	-18208	2505.36	60494	2518.78	1.005	Si
SLU 80	3.47	-14359	1123.81	47704	3198.02	2.846	Si
SLU 82	1.57	-18388	2510.78	61091	2471.21	0.984	No, M>Mu
SLU 82	3.47	-14612	1141.1	48547	3173.25	2.781	Si
SLU 79	1.57	-18307	2675.53	60821	2492.87	0.932	No, M>Mu
SLU 79	3.47	-14540	1115.7	48308	3180.57	2.851	Si
SLU 84	1.57	-18658	2561.32	61989	2396.99	0.936	No, M>Mu
SLU 84	3.47	-14804	1149.29	49184	3152.65	2.743	Si
SLU 81	1.57	-18487	2680.96	61418	2444.52	0.912	No, M>Mu
SLU 81	3.47	-14794	1132.99	49151	3153.78	2.784	Si
SLU 83	1.57	-18757	2731.49	62316	2369.13	0.867	No, M>Mu
SLU 83	3.47	-14986	1141.18	49788	3131.65	2.744	Si
SLU 75	1.57	-18036	2461.63	59922	2563.06	1.041	Si
SLU 75	3.47	-14280	1130.63	47441	3205.17	2.835	Si

Verifica a pressoflessione nel piano secondo D.M. 17-01-18 NTC §7.8.2.2.1 in combinazioni sismiche, γM = 2

Comb.	Quota	N	M	σ0	Mu	c.s.	Verifica
SLV 3	1.57	-15769	5287.06	52390	4841.64	0.916	No, M>Mu
SLV 3	3.47	-4328	-1383.47	14377	2052.32	1.483	Si
SLV 2	1.57	-19761	4675.18	65652	4914.45	1.051	Si
SLV 2	3.47	-10899	-234.61	36208	4121.99	17.57	Si
SLV 1	1.57	-19761	4675.18	65652	4914.45	1.051	Si
SLV 1	3.47	-10899	-234.61	36208	4121.99	17.57	Si
SLV 10	1.57	-17608	-155.03	58498	4933.03	31.82	Si
SLV 10	3.47	-21504	3179.99	71443	4800.14	1.509	Si
SLV 11	1.57	-4301	1884.58	14290	2041.5	1.083	Si
SLV 11	3.47	399	-649.56	0	0	0	No, Trazione
SLV 12	1.57	-4301	1884.58	14290	2041.5	1.083	Si
SLV 12	3.47	399	-649.56	0	0	0	No, Trazione
SLV 9	1.57	-17608	-155.03	58498	4933.03	31.82	Si
SLV 9	3.47	-21504	3179.99	71443	4800.14	1.509	Si
SLV 4	1.57	-15769	5287.06	52390	4841.64	0.916	No, M>Mu
SLV 4	3.47	-4328	-1383.47	14377	2052.32	1.483	Si
SLV 7	1.57	-7445	3784.43	24733	3191.44	0.843	No, M>Mu
SLV 7	3.47	1756	-1606.91	0	0	0	No, Trazione
SLV 8	1.57	-7445	3784.43	24733	3191.44	0.843	No, M>Mu
SLV 8	3.47	1756	-1606.91	0	0	0	No, Trazione

Verifica a taglio nel piano secondo D.M. 17-01-18 (N.T.C.) §7.8.2.2.2 con rottura per scorrimento in combinazioni non sismiche, γM = 3

Comb.	Quota	N	V par	M	σ0	σN	l'	fvd	Vt scorr.	Vt fess.diag.	Vt,lim	c.s.	Verifica
SLU 62	1.57	-17265	2252	2524.41		57360	1.075	10833	3261			1.45	Si
SLU 62	3.47	-13637	583	1045.14		45307	1.075	10833	3261			5.59	Si
SLU 60	1.57	-16995	2187	2473.87		56462	1.075	10833	3261			1.49	Si
SLU 60	3.47	-13445	564	1036.94		44669	1.075	10833	3261			5.78	Si
SLU 84	1.57	-18658	2187	2561.32		61989	1.075	10833	3261			1.49	Si
SLU 84	3.47	-14804	624	1149.29		49184	1.075	10833	3261			5.23	Si
SLU 56	1.57	-16913	2226	2475.26		56191	1.075	10833	3261			1.46	Si
SLU 56	3.47	-13304	543	1034.67		44201	1.075	10833	3261			6	Si
SLU 79	1.57	-18307	2380	2675.53		60821	1.075	10833	3261			1.37	Si
SLU 79	3.47	-14540	650	1115.7		48308	1.075	10833	3261			5.01	Si
SLU 77	1.57	-18405	2376	2682.34		61147	1.075	10833	3261			1.37	Si
SLU 77	3.47	-14653	646	1130.71		48682	1.075	10833	3261			5.05	Si
SLU 83	1.57	-18757	2402	2731.49		62316	1.075	10833	3261			1.36	Si
SLU 83	3.47	-14986	686	1141.18		49788	1.075	10833	3261			4.75	Si
SLU 81	1.57	-18487	2337	2680.96		61418	1.075	10833	3261			1.4	Si
SLU 81	3.47	-14794	667	1132.99		49151	1.075	10833	3261			4.89	Si
SLU 74	1.57	-18135	2310	2631.81		60249	1.075	10833	3261			1.41	Si
SLU 74	3.47	-14461	627	1122.52		48045	1.075	10833	3261			5.2	Si
SLU 58	1.57	-16815	2230	2468.45		55865	1.075	10833	3261			1.46	Si
SLU 58	3.47	-13191	548	1019.66		43826	1.075	10833	3261			5.95	Si

Verifica a taglio nel piano secondo D.M. 17-01-18 (N.T.C.) §7.8.2.2.2 con rottura per scorrimento in combinazioni sismiche, γM = 2

Comb.	Quota	N	V par	M	σ0	σN	l'	fvd	Vt scorr.	Vt fess.diag.	Vt,lim	c.s.	Verifica
SLV 4	1.57	-15769	7694	5287.06		92837	0.6066	16250	2760			0.36	No, Vu<V
SLV 4	3.47	-4328	3290	-1383.47		23654	0.6534	13064	2390			0.73	No, Vu<V
SLV 16	1.57	-5291	-4154	-1045.78		18535	1.0195	12040	3437			0.83	No, Vu<V
SLV 16	3.47	-8849	-1275	1807.68		31616	0.9997	14656	4102			3.22	Si
SLV 1	1.57	-19761	7349	4675.18		78181	0.9027	16250	4107			0.56	No, Vu<V
SLV 1	3.47	-10899	2051	-234.61		36208	1.075	15575	4688			2.29	Si
SLV 15	1.57	-5291	-4154	-1045.78		18535	1.0195	12040	3437			0.83	No, Vu<V
SLV 15	3.47	-8849	-1275	1807.68		31616	0.9997	14656	4102			3.22	Si
SLV 11	1.57	-4301	396	1884.58		51544	0.298	16250	1356			3.43	Si
SLV 11	3.47	399	1768	-649.56		0	0	8333	0			0	No, Vu<V
SLV 3	1.57	-15769	7694	5287.06		92837	0.6066	16250	2760			0.36	No, Vu<V
SLV 3	3.47	-4328	3290	-1383.47		23654	0.6534	13064	2390			0.73	No, Vu<V
SLV 8	1.57	-7445	3950	3784.43		304082	0.0874	16250	398			0.1	No, Vu<V
SLV 8	3.47	1756	3137	-1606.91		0	0	8333	0			0	No, Vu<V
SLV 12	1.57	-4301	396	1884.58		51544	0.298	16250	1356			3.43	Si
SLV 12	3.47	399	1768	-649.56		0	0	8333	0			0	No, Vu<V
SLV 2	1.57	-19761	7349	4675.18		78181	0.9027	16250	4107			0.56	No, Vu<V
SLV 2	3.47	-10899	2051	-234.61		36208	1.075	15575	4688			2.29	Si
SLV 7	1.57	-7445	3950	3784.43		304082	0.0874	16250	398			0.1	No, Vu<V
SLV 7	3.47	1756	3137	-1606.91		0	0	8333	0			0	No, Vu<V

Verifica a pressoflessione fuori piano D.M. 17-01-18 (N.T.C.)

quota 2.51 Wa 0.05 denominatore 8 γM = 2

Comb.	fd	Sa	σ0	N	M	Mc	Coeff.s.	Verifica
SLV 11	143750	0.3	4277	-1288	93.3	173.94	1.86	Si
SLV 12	143750	0.3	4277	-1288	93.3	173.94	1.86	Si
SLV 15	143750	0.3	13442	-4046	93.3	504.12	5.4	Si
SLV 16	143750	0.3	13442	-4046	93.3	504.12	5.4	Si
SLV 8	143750	0.3	15257	-4592	93.3	562.63	6.03	Si
SLV 7	143750	0.3	15257	-4592	93.3	562.63	6.03	Si
SLV 14	143750	0.3	32276	-9715	93.3	1000.82	10.73	Si
SLV 13	143750	0.3	32276	-9715	93.3	1000.82	10.73	Si
SLV 6	143750	0.3	78038	-23489	93.3	1188.21	12.74	Si
SLV 5	143750	0.3	78038	-23489	93.3	1188.21	12.74	Si

Verifica dei meccanismi locali di collasso con analisi cinematica lineare

forza di aggancio al piano = 0 quota mezzeria = 2.51 Wa = 0.05 Ta = 0.0808

Comb.	N top	N base	V orto	α0	M*	e*	a0*	aLim	Verifica
SLV 11	-3788	-3156	-98	0.025	544.5	0.924	0.40076	9.1791	No
SLV 12	-3788	-3156	-98	0.025	544.5	0.924	0.40076	9.1791	No
SLV 8	-2493	-2969	-79	0.026	415.1	0.907	0.41923	9.1791	No
SLV 7	-2493	-2969	-79	0.026	415.1	0.907	0.41923	9.1791	No
SLV 16	-8561	-7293	-62	0.036	1027.9	0.955	0.54106	10.39734	No
SLV 15	-8561	-7293	-62	0.036	1027.9	0.955	0.54106	10.39734	No
SLV 1	-7041	-10029	51	0.036	873.6	0.948	0.55836	10.39734	No
SLV 2	-7041	-10029	51	0.036	873.6	0.948	0.55836	10.39734	No
SLV 6	-11814	-14166	87	0.034	1358.8	0.965	0.51472	9.1791	No
SLV 5	-11814	-14166	87	0.034	1358.8	0.965	0.51472	9.1791	No

Tabella dei coefficienti di sicurezza minimi

Stato limite	Coeff.s.	Comb.	Verifica
PF_SLU	0.867	SLU 83	No
V_SLU	1.358	SLU 83	Si
PF_SLV	0	SLV 12	No
V_SLV	0	SLV 7	No
PFFP_SLV	1.864	SLV 11	Si
R_SLV	0.044	SLV 11	No

Maschio 65

Verifiche condotte secondo D.M. 17-01-18 (N.T.C.)

Dati geometrici

X ini.	Y ini.	X fin.	Y fin.	Quota i.	Quota.s	l	Sp.	h netta	h ini.	h fin.	a	a.s.,sx	a.s.,dx
-18.448	-3.254	-18.448	1.046	L3	L4	4.301	0.14	3.68	3.68	3.68			

Caratteristiche del materiale

(Circolare 7 21-01-19 C8.5.I) Muratura in mattoni pieni e malta di calce LC2_Corti

fb	fk	fvk0	fmedio	τ0	fv0	μ	ϕ	fv,lim	E	G	FC
600000			345000	9000	20000	0.58	0.77	32500	320000000	128000000	1.2

Verifica a pressoflessione nel piano secondo D.M. 17-01-18 NTC §7.8.2.2.1 in combinazioni non sismiche, γM = 3

Comb.	Quota	N	M	σ0	Mu	c.s.	Verifica
SLU 84	0.67	-51834	-4075.77	86090	0	0	No, Rottura per schiacciamento
SLU 84	4.35	-28469	-5273.75	47284	25683.22	4.87	Si
SLU 77	0.67	-51456	-3698.9	85462	0	0	No, Rottura per schiacciamento
SLU 77	4.35	-28698	-5231.6	47664	25601.57	4.894	Si
SLU 80	0.67	-50337	-3973.99	83604	0	0	No, Rottura per schiacciamento
SLU 80	4.35	-27800	-5102.4	46172	25895.13	5.075	Si
SLU 74	0.67	-50740	-3784.51	84273	0	0	No, Rottura per schiacciamento
SLU 74	4.35	-28157	-5212.26	46766	25786.91	4.947	Si

Comb.	Quota	N	M	σ0	Mu	c.s.	Verifica
SLU 81	0.67	-51841	-3909.63	86101	0	0	No, Rottura per schiacciamento
SLU 81	4.35	-28535	-5366.73	47393	25660.23	4.781	Si
SLU 82	0.67	-51118	-4161.38	84901	0	0	No, Rottura per schiacciamento
SLU 82	4.35	-27928	-5254.4	46385	25857.68	4.921	Si
SLU 75	0.67	-50018	-4036.26	83073	0	0	No, Rottura per schiacciamento
SLU 75	4.35	-27550	-5099.93	45757	25964.24	5.091	Si
SLU 76	0.67	-49140	-4227.43	81615	0	0	No, Rottura per schiacciamento
SLU 76	4.35	-26854	-5008.17	44601	26127.76	5.217	Si
SLU 79	0.67	-51060	-3722.24	84804	0	0	No, Rottura per schiacciamento
SLU 79	4.35	-28407	-5214.72	47181	25704.49	4.929	Si
SLU 83	0.67	-52557	-3824.02	87290	0	0	No, Rottura per schiacciamento
SLU 83	4.35	-29076	-5386.08	48292	25456.96	4.726	Si

Verifica a pressoflessione nel piano secondo D.M. 17-01-18 NTC §7.8.2.2.1 in combinazioni sismiche, γM = 2

Comb.	Quota	N	M	σ0	Mu	c.s.	Verifica
SLV 7	0.67	-32444	10638.6	53886	38998.57	3.666	Si
SLV 7	4.35	-22018	190.41	36569	33176.16	174.239	Si
SLV 14	0.67	-34759	-13307.46	57730	39429.2	2.963	Si
SLV 14	4.35	-15816	-6553.03	26269	26698.57	4.074	Si
SLV 10	0.67	-36748	-16623.94	61033	39549.04	2.379	Si
SLV 10	4.35	-16073	-7565.88	26695	27011.42	3.57	Si
SLV 3	0.67	-34433	7322.12	57189	39387.51	5.379	Si
SLV 3	4.35	-22275	-822.45	36996	33395.91	40.606	Si
SLV 4	0.67	-34433	7322.12	57189	39387.51	5.379	Si
SLV 4	4.35	-22275	-822.45	36996	33395.91	40.606	Si
SLV 5	0.67	-37066	-12519.27	61562	39546.76	3.159	Si
SLV 5	4.35	-17614	-6443.78	29255	28808.02	4.471	Si
SLV 6	0.67	-37066	-12519.27	61562	39546.76	3.159	Si
SLV 6	4.35	-17614	-6443.78	29255	28808.02	4.471	Si
SLV 9	0.67	-36748	-16623.94	61033	39549.04	2.379	Si
SLV 9	4.35	-16073	-7565.88	26695	27011.42	3.57	Si
SLV 13	0.67	-34759	-13307.46	57730	39429.2	2.963	Si
SLV 13	4.35	-15816	-6553.03	26269	26698.57	4.074	Si
SLV 8	0.67	-32444	10638.6	53886	38998.57	3.666	Si
SLV 8	4.35	-22018	190.41	36569	33176.16	174.239	Si

Verifica a taglio nel piano secondo D.M. 17-01-18 (N.T.C.) §7.8.2.2.2 con rottura per scorrimento in combinazioni non sismiche, γM = 3

Comb.	Quota	N	V par	M	σ0	σN	l'	fvd	Vt scorr.	Vt fess.diag.	Vt,lim	c.s.	Verifica
SLU 23	0.67	-35435	-1790	-3349.63		58854	4.3007	10833	6523			3.64	Si
SLU 23	4.35	-19202	-2042	-3629.1		31893	4.3007	9808	5905			2.89	Si
SLU 47	0.67	-39049	-1699	-4262.27		64856	4.3007	10833	6523			3.84	Si
SLU 47	4.35	-21264	-2041	-4205.22		35317	4.3007	10265	6180			3.03	Si
SLU 26	0.67	-36151	-1797	-3264.02		60043	4.3007	10833	6523			3.63	Si
SLU 26	4.35	-19744	-2059	-3648.44		32792	4.3007	9928	5977			2.9	Si
SLU 2	0.67	-30509	-1873	-3422.21		50671	4.3007	10833	6523			3.48	Si
SLU 2	4.35	-16437	-2052	-3271.11		27299	4.3007	9195	5537			2.7	Si
SLU 34	0.67	-41315	-1700	-3301.76		68619	4.3007	10833	6523			3.84	Si
SLU 34	4.35	-22568	-2040	-4093.41		37482	4.3007	10553	6354			3.11	Si
SLU 13	0.67	-36388	-1783	-3374.34		60436	4.3007	10833	6523			3.66	Si
SLU 13	4.35	-19802	-2050	-3735.42		32889	4.3007	9941	5985			2.92	Si
SLU 31	0.67	-40599	-1694	-3387.37		67430	4.3007	10833	6523			3.85	Si
SLU 31	4.35	-22026	-2023	-4074.06		36583	4.3007	10433	6282			3.1	Si
SLU 44	0.67	-38334	-1693	-4347.88		63667	4.3007	10833	6523			3.85	Si
SLU 44	4.35	-20723	-2023	-4185.87		34418	4.3007	10145	6108			3.02	Si
SLU 5	0.67	-31225	-1880	-3336.6		51860	4.3007	10833	6523			3.47	Si
SLU 5	4.35	-16978	-2069	-3290.46		28198	4.3007	9315	5609			2.71	Si
SLU 10	0.67	-35672	-1777	-3459.94		59247	4.3007	10833	6523			3.67	Si
SLU 10	4.35	-19261	-2033	-3716.08		31990	4.3007	9821	5913			2.91	Si

Verifica a taglio nel piano secondo D.M. 17-01-18 (N.T.C.) §7.8.2.2.2 con rottura per scorrimento in combinazioni sismiche, γM = 2

Comb.	Quota	N	V par	M	σ0	σN	l'	fvd	Vt scorr.	Vt fess.diag.	Vt,lim	c.s.	Verifica
SLV 9	0.67	-36748	-12911	-16623.94		61033	4.3007	16250	9784			0.76	No, Vu<V
SLV 9	4.35	-16073	-13365	-7565.88		26695	4.3007	13672	8232			0.62	No, Vu<V
SLV 5	0.67	-37066	-12014	-12519.27		61562	4.3007	16250	9784			0.81	No, Vu<V
SLV 5	4.35	-17614	-12535	-6443.78		29255	4.3007	14184	8540			0.68	No, Vu<V
SLV 12	0.67	-32126	13509	6533.94		53357	4.3007	16250	9784			0.72	No, Vu<V
SLV 12	4.35	-20477	12763	-931.69		34010	4.3007	15135	9113			0.71	No, Vu<V
SLV 13	0.67	-34759	-4710	-13307.46		57730	4.3007	16250	9784			2.08	Si
SLV 13	4.35	-15816	-5188	-6553.03		26269	4.3007	13587	8181			1.58	Si
SLV 8	0.67	-32444	14405	10638.6		53886	4.3007	16250	9784			0.68	No, Vu<V
SLV 8	4.35	-22018	13593	190.41		36569	4.3007	15647	9421			0.69	No, Vu<V
SLV 10	0.67	-36748	-12911	-16623.94		61033	4.3007	16250	9784			0.76	No, Vu<V
SLV 10	4.35	-16073	-13365	-7565.88		26695	4.3007	13672	8232			0.62	No, Vu<V
SLV 14	0.67	-34759	-4710	-13307.46		57730	4.3007	16250	9784			2.08	Si
SLV 14	4.35	-15816	-5188	-6553.03		26269	4.3007	13587	8181			1.58	Si
SLV 6	0.67	-37066	-12014	-12519.27		61562	4.3007	16250	9784			0.81	No, Vu<V
SLV 6	4.35	-17614	-12535	-6443.78		29255	4.3007	14184	8540			0.68	No, Vu<V
SLV 7	0.67	-32444	14405	10638.6		53886	4.3007	16250	9784			0.68	No, Vu<V
SLV 7	4.35	-22018	13593	190.41		36569	4.3007	15647	9421			0.69	No, Vu<V
SLV 11	0.67	-32126	13509	6533.94		53357	4.3007	16250	9784			0.72	No, Vu<V
SLV 11	4.35	-20477	12763	-931.69		34010	4.3007	15135	9113			0.71	No, Vu<V

Verifica a pressoflessione fuori piano D.M. 17-01-18 (N.T.C.)

quota 2.51 Wa 0.03 denominatore 8 γM = 2

Comb.	fd	Sa	σ0	N	M	Mc	Coeff.s.	Verifica
SLV 2	143750	0.3	43951	-26463	199.64	1186.08	5.94	Si
SLV 1	143750	0.3	43951	-26463	199.64	1186.08	5.94	Si
SLV 6	143750	0.3	44089	-26546	199.64	1187.71	5.95	Si
SLV 5	143750	0.3	44089	-26546	199.64	1187.71	5.95	Si
SLV 4	143750	0.3	44696	-26911	199.64	1194.7	5.98	Si
SLV 3	143750	0.3	44696	-26911	199.64	1194.7	5.98	Si
SLV 10	143750	0.3	44953	-27066	199.64	1197.58	6	Si
SLV 9	143750	0.3	44953	-27066	199.64	1197.58	6	Si
SLV 8	143750	0.3	46572	-28041	199.64	1214.71	6.08	Si
SLV 7	143750	0.3	46572	-28041	199.64	1214.71	6.08	Si

Verifica dei meccanismi locali di collasso con analisi cinematica lineare

forza di aggancio al piano = 0 quota mezzeria = 2.51 Wa = 0.03 Ta = 0.1615

Comb.	N top	N base	V orto	α0	M*	e*	a0*	aLim	Verifica
SLV 3	-22275	-34433	14	0.02	2579.9	0.964	0.3019	13.74169	No
SLV 4	-22275	-34433	14	0.02	2579.9	0.964	0.3019	13.74169	No
SLV 2	-20954	-35820	12	0.02	2445.5	0.962	0.30479	13.74169	No
SLV 1	-20954	-35820	12	0.02	2445.5	0.962	0.30479	13.74169	No
SLV 8	-22018	-32444	8	0.02	2553.8	0.963	0.30598	13.74169	No
SLV 7	-22018	-32444	8	0.02	2553.8	0.963	0.30598	13.74169	No
SLV 16	-17137	-33372	-11	0.02	2057.4	0.955	0.31084	13.74169	No
SLV 15	-17137	-33372	-11	0.02	2057.4	0.955	0.31084	13.74169	No
SLV 14	-15816	-34759	-13	0.02	1923.2	0.953	0.31145	13.74169	No
SLV 13	-15816	-34759	-13	0.02	1923.2	0.953	0.31145	13.74169	No

Tabella dei coefficienti di sicurezza minimi

Stato limite	Coeff.s.	Comb.	Verifica
PF_SLU	0	SLU 74	No
V_SLU	2.699	SLU 2	Si
PF_SLV	2.379	SLV 9	Si
V_SLV	0.616	SLV 9	No
PFFP_SLV	5.941	SLV 1	Si
R_SLV	0.022	SLV 3	No

Maschio 66

Verifiche condotte secondo D.M. 17-01-18 (N.T.C.)

Dati geometrici

X ini.	Y ini.	X fin.	Y fin.	Quota i.	Quota.s	l	Sp.	h netta	h ini.	h fin.	a	a.s.,sx	a.s.,dx
-16.992	-4.725	-16.992	-4.589	L3	L4	0.136	0.3	3.68	3.68	3.68			

Caratteristiche del materiale

(Circolare 7 21-01-19 C8.5.I) Muratura in mattoni pieni e malta di calce LC2_Corti

fb	fk	fvk0	fmedio	τ0	fv0	μ	ϕ	fv,lim	E	G	FC
600000			345000	9000	20000	0.58	0.77	32500	320000000	128000000	1.2

Verifica a pressoflessione nel piano secondo D.M. 17-01-18 NTC §7.8.2.2.1 in combinazioni non sismiche, γM = 3

Comb.	Quota	N	M	σ0	Mu	c.s.	Verifica
SLU 65	0.67	-3469	-17.62	85192	0	0	No, Rottura per schiacciamento
SLU 65	3.78	-1328	3.17	32610	54.05	17.07	Si
SLU 47	0.67	-3339	-14.56	81986	0	0	No, Rottura per schiacciamento
SLU 47	3.78	-1236	2.37	30342	52.63	22.228	Si
SLU 57	0.67	-3414	-25.21	83838	0	0	No, Rottura per schiacciamento
SLU 57	3.78	-1454	5.92	35706	55.43	9.366	Si
SLU 55	0.67	-3554	-18.31	87273	0	0	No, Rottura per schiacciamento
SLU 55	3.78	-1366	3.34	33552	54.54	16.333	Si
SLU 84	0.67	-3644	-29.36	89485	0	0	No, Rottura per schiacciamento
SLU 84	3.78	-1597	7	39208	56.21	8.025	Si
SLU 52	0.67	-3515	-17.89	86324	0	0	No, Rottura per schiacciamento
SLU 52	3.78	-1345	3.23	33018	54.27	16.823	Si
SLU 59	0.67	-3421	-24.69	84013	0	0	No, Rottura per schiacciamento
SLU 59	3.78	-1448	5.79	35564	55.38	9.568	Si
SLU 63	0.67	-3475	-25.87	85330	0	0	No, Rottura per schiacciamento
SLU 63	3.78	-1483	6.09	36406	55.65	9.136	Si
SLU 54	0.67	-3375	-24.79	82889	0	0	No, Rottura per schiacciamento
SLU 54	3.78	-1432	5.81	35172	55.24	9.515	Si
SLU 61	0.67	-3436	-25.45	84381	0	0	No, Rottura per schiacciamento
SLU 61	3.78	-1461	5.98	35872	55.49	9.281	Si

Verifica a pressoflessione nel piano secondo D.M. 17-01-18 NTC §7.8.2.2.1 in combinazioni sismiche, γM = 2

Comb.	Quota	N	M	σ0	Mu	c.s.	Verifica
SLV 10	0.67	6190	-424.94	0	0	0	No, Trazione
SLV 10	3.78	-4053	65.71	99533	51.01	0.776	No, M>Mu
SLV 5	0.67	4592	-377.87	0	0	0	No, Trazione
SLV 5	3.78	-3798	56.61	93262	61.02	1.078	Si

Comb.	Quota	N	M	σ0	Mu	c.s.	Verifica
SLV 7	0.67	-10917	374.28	268073	0	0	No, Rottura per schiacciamento
SLV 7	3.78	1754	-51.69	0	0	0	No, Trazione
SLV 3	0.67	-7353	165.94	180572	0	0	No, Rottura per schiacciamento
SLV 3	3.78	109	-24.4	0	0	0	No, Trazione
SLV 9	0.67	6190	-424.94	0	0	0	No, Trazione
SLV 9	3.78	-4053	65.71	99533	51.01	0.776	No, M>Mu
SLV 11	0.67	-9319	327.21	228826	0	0	No, Rottura per schiacciamento
SLV 11	3.78	1499	-42.6	0	0	0	No, Trazione
SLV 12	0.67	-9319	327.21	228826	0	0	No, Rottura per schiacciamento
SLV 12	3.78	1499	-42.6	0	0	0	No, Trazione
SLV 6	0.67	4592	-377.87	0	0	0	No, Trazione
SLV 6	3.78	-3798	56.61	93262	61.02	1.078	Si
SLV 8	0.67	-10917	374.28	268073	0	0	No, Rottura per schiacciamento
SLV 8	3.78	1754	-51.69	0	0	0	No, Trazione
SLV 4	0.67	-7353	165.94	180572	0	0	No, Rottura per schiacciamento
SLV 4	3.78	109	-24.4	0	0	0	No, Trazione

Verifica a taglio nel piano secondo D.M. 17-01-18 (N.T.C.) §7.8.2.2.2 con rottura per scorrimento in combinazioni non sismiche, γM = 3

Comb.	Quota	N	V par	M	σ0	σN	I'	fvd	Vt scorr.	Vt fess.diag.	Vt,lim	c.s.	Verifica
SLU 5	0.67	-2721	-20	-8.78		66809	0.1357	10833	441			21.84	Si
SLU 5	3.78	-951	-108	0.74		23349	0.1357	8669	353			3.27	Si
SLU 55	0.67	-3554	-42	-18.31		87273	0.1357	10833	441			10.56	Si
SLU 55	3.78	-1366	-115	3.34		33552	0.1357	10029	408			3.56	Si
SLU 52	0.67	-3515	-41	-17.89		86324	0.1357	10833	441			10.82	Si
SLU 52	3.78	-1345	-115	3.23		33018	0.1357	9958	406			3.53	Si
SLU 44	0.67	-3300	-32	-14.14		81037	0.1357	10833	441			13.64	Si
SLU 44	3.78	-1214	-121	2.25		29808	0.1357	9530	388			3.22	Si
SLU 68	0.67	-3508	-42	-18.04		86141	0.1357	10833	441			10.57	Si
SLU 68	3.78	-1350	-113	3.28		33143	0.1357	9975	406			3.61	Si
SLU 2	0.67	-2682	-19	-8.36		65860	0.1357	10833	441			22.99	Si
SLU 2	3.78	-929	-108	0.63		22815	0.1357	8598	350			3.25	Si
SLU 65	0.67	-3469	-41	-17.62		85192	0.1357	10833	441			10.83	Si
SLU 65	3.78	-1328	-113	3.17		32610	0.1357	9903	403			3.58	Si
SLU 10	0.67	-2897	-28	-12.1		71147	0.1357	10833	441			15.97	Si
SLU 10	3.78	-1060	-102	1.6		26025	0.1357	9026	368			3.6	Si
SLU 47	0.67	-3339	-33	-14.56		81986	0.1357	10833	441			13.23	Si
SLU 47	3.78	-1236	-121	2.37		30342	0.1357	9601	391			3.24	Si
SLU 13	0.67	-2936	-29	-12.52		72096	0.1357	10833	441			15.4	Si
SLU 13	3.78	-1082	-102	1.71		26559	0.1357	9097	370			3.63	Si

Verifica a taglio nel piano secondo D.M. 17-01-18 (N.T.C.) §7.8.2.2.2 con rottura per scorrimento in combinazioni sismiche, γM = 2

Comb.	Quota	N	V par	M	σ0	σN	I'	fvd	Vt scorr.	Vt fess.diag.	Vt,lim	c.s.	Verifica
SLV 8	0.67	-10917	2193	374.28		361143	0.1008	16250	491			0.22	No, Vu<V
SLV 8	3.78	1754	-1576	-51.69		0	0	8333	0			0	No, Vu<V
SLV 3	0.67	-7353	1672	165.94		180572	0.1357	16250	662			0.4	No, Vu<V
SLV 3	3.78	109	-999	-24.4		0	0	8333	0			0	No, Vu<V
SLV 5	0.67	4592	-1614	-377.87		0	0	8333	0			0	No, Vu<V
SLV 5	3.78	-3798	1184	56.61		93262	0.1357	16250	662			0.56	No, Vu<V
SLV 4	0.67	-7353	1672	165.94		180572	0.1357	16250	662			0.4	No, Vu<V
SLV 4	3.78	109	-999	-24.4		0	0	8333	0			0	No, Vu<V
SLV 10	0.67	6190	-2310	-424.94		0	0	8333	0			0	No, Vu<V
SLV 10	3.78	-4053	1517	65.71		99533	0.1357	16250	662			0.44	No, Vu<V
SLV 9	0.67	6190	-2310	-424.94		0	0	8333	0			0	No, Vu<V
SLV 9	3.78	-4053	1517	65.71		99533	0.1357	16250	662			0.44	No, Vu<V
SLV 7	0.67	-10917	2193	374.28		361143	0.1008	16250	491			0.22	No, Vu<V
SLV 7	3.78	1754	-1576	-51.69		0	0	8333	0			0	No, Vu<V
SLV 6	0.67	4592	-1614	-377.87		0	0	8333	0			0	No, Vu<V
SLV 6	3.78	-3798	1184	56.61		93262	0.1357	16250	662			0.56	No, Vu<V
SLV 11	0.67	-9319	1498	327.21		316075	0.0983	16250	479			0.32	No, Vu<V
SLV 11	3.78	1499	-1242	-42.6		0	0	8333	0			0	No, Vu<V
SLV 12	0.67	-9319	1498	327.21		316075	0.0983	16250	479			0.32	No, Vu<V
SLV 12	3.78	1499	-1242	-42.6		0	0	8333	0			0	No, Vu<V

Verifica a pressoflessione fuori piano D.M. 17-01-18 (N.T.C.)

quota 2.51 Wa 0.05 denominatore 8 γM = 2

Comb.	fd	Sa	σ0	N	M	Mc	Coeff.s.	Verifica
SLV 9	143750	0.3	148898	-6064	12.33	0	0	No, Rottura per schiacciamento
SLV 5	143750	0.3	134203	-5465	12.33	0	0	No, Rottura per schiacciamento
SLV 12	143750	0.3	0	1423	12.33	0	0	No, Trazione
SLV 10	143750	0.3	148898	-6064	12.33	0	0	No, Rottura per schiacciamento
SLV 8	143750	0.3	0	2021	12.33	0	0	No, Trazione
SLV 6	143750	0.3	134203	-5465	12.33	0	0	No, Rottura per schiacciamento
SLV 3	143750	0.3	0	99	12.33	0	0	No, Trazione
SLV 11	143750	0.3	0	1423	12.33	0	0	No, Trazione
SLV 4	143750	0.3	0	99	12.33	0	0	No, Trazione
SLV 7	143750	0.3	0	2021	12.33	0	0	No, Trazione

Verifica dei meccanismi locali di collasso con analisi cinematica lineare

forza di aggancio al piano = 0 quota mezzeria = 2.51 Wa = 0.05 Ta = 0.0754

Comb.	N top	N base	V orto	α0	M*	e*	a0*	aLim	Verifica
SLV 13	-493	2627	-3	0	0	0	0	9.5486	No, Trazione
SLV 5	-665	4592	-6	0	0	0	0	8.44994	No, Trazione
SLV 10	-438	6190	-7	0	0	0	0	8.44994	No, Trazione
SLV 14	-493	2627	-3	0	0	0	0	9.5486	No, Trazione
SLV 9	-438	6190	-7	0	0	0	0	8.44994	No, Trazione
SLV 6	-665	4592	-6	0	0	0	0	8.44994	No, Trazione
SLV 4	-1521	-7353	6	0.041	176	0.964	0.61305	9.5486	No
SLV 3	-1521	-7353	6	0.041	176	0.964	0.61305	9.5486	No
SLV 8	-1576	-10917	10	0.038	181.6	0.965	0.57737	8.44994	No
SLV 7	-1576	-10917	10	0.038	181.6	0.965	0.57737	8.44994	No

Tabella dei coefficienti di sicurezza minimi

Stato limite	Coeff.s.	Comb.	Verifica
PF_SLU	0	SLU 47	No
V_SLU	3.218	SLU 44	Si
PF_SLV	0	SLV 14	No
V_SLV	0	SLV 3	No
PFFP_SLV	0	SLV 12	No
R_SLV	0	SLV 14	No

Maschio 67

Verifiche condotte secondo D.M. 17-01-18 (N.T.C.)

Dati geometrici

X ini.	Y ini.	X fin.	Y fin.	Quota i.	Quota.s	l	Sp.	h netta	h ini.	h fin.	a	a.s.,sx	a.s.,dx
-16.992	-3.499	-16.992	-3.254	L3	L4	0.245	0.3	3.68	3.68	3.68			

Caratteristiche del materiale

(Circolare 7 21-01-19 C8.5.I) Muratura in mattoni pieni e malta di calce LC2_Corti

fb	fk	fvk0	fmedio	τ0	fv0	μ	ϕ	fv,lim	E	G	FC
600000			345000	9000	20000	0.58	0.77	32500	320000000	128000000	1.2

Verifica a pressoflessione nel piano secondo D.M. 17-01-18 NTC §7.8.2.2.1 in combinazioni non sismiche, γM = 3

Comb.	Quota	N	M	σ0	Mu	c.s.	Verifica
SLU 75	0.67	-5496	295.51	74773	55.26	0.187	No, M>Mu
SLU 75	3.78	-2572	32.19	34996	179.75	5.583	Si
SLU 82	0.67	-5622	302.62	76479	42.1	0.139	No, M>Mu
SLU 82	3.78	-2628	33.61	35749	180.64	5.374	Si
SLU 77	0.67	-5627	292.72	76547	41.56	0.142	No, M>Mu
SLU 77	3.78	-2520	39.95	34288	178.79	4.476	Si
SLU 84	0.67	-5689	306.02	77391	34.79	0.114	No, M>Mu
SLU 84	3.78	-2663	34.07	36223	181.14	5.317	Si
SLU 74	0.67	-5559	289.32	75634	48.7	0.168	No, M>Mu
SLU 74	3.78	-2486	39.49	33815	178.09	4.51	Si
SLU 78	0.67	-5563	298.92	75686	48.3	0.162	No, M>Mu
SLU 78	3.78	-2607	32.65	35469	180.32	5.523	Si
SLU 83	0.67	-5752	299.83	78253	27.73	0.092	No, M>Mu
SLU 83	3.78	-2576	41.37	35042	179.8	4.347	Si
SLU 79	0.67	-5595	291.56	76120	44.92	0.154	No, M>Mu
SLU 79	3.78	-2505	39.35	34079	178.49	4.536	Si
SLU 80	0.67	-5532	297.76	75258	51.58	0.173	No, M>Mu
SLU 80	3.78	-2592	32.05	35260	180.07	5.618	Si
SLU 81	0.67	-5685	296.42	77340	35.21	0.119	No, M>Mu
SLU 81	3.78	-2541	40.91	34569	179.18	4.38	Si

Verifica a pressoflessione nel piano secondo D.M. 17-01-18 NTC §7.8.2.2.1 in combinazioni sismiche, γM = 2

Comb.	Quota	N	M	σ0	Mu	c.s.	Verifica
SLV 5	0.67	-6965	32.87	94757	191.55	5.828	Si
SLV 5	3.78	833	243.19	0	0	0	No, Trazione
SLV 9	0.67	-6597	-43.42	89754	214.54	4.94	Si
SLV 9	3.78	1190	285.65	0	0	0	No, Trazione
SLV 14	0.67	-4114	11.76	55971	273.14	23.23	Si
SLV 14	3.78	-296	168.13	0	0	0	No, e>l/2
SLV 6	0.67	-6965	32.87	94757	191.55	5.828	Si
SLV 6	3.78	833	243.19	0	0	0	No, Trazione
SLV 8	0.67	-1096	444.84	0	0	0	No, e>l/2
SLV 8	3.78	-4605	-234.14	62651	274.89	1.174	Si
SLV 11	0.67	-728	368.55	0	0	0	No, e>l/2
SLV 11	3.78	-4248	-191.68	57792	274.27	1.431	Si
SLV 10	0.67	-6597	-43.42	89754	214.54	4.94	Si
SLV 10	3.78	1190	285.65	0	0	0	No, Trazione
SLV 7	0.67	-1096	444.84	0	0	0	No, e>l/2
SLV 7	3.78	-4605	-234.14	62651	274.89	1.174	Si
SLV 13	0.67	-4114	11.76	55971	273.14	23.23	Si
SLV 13	3.78	-296	168.13	0	0	0	No, e>l/2
SLV 12	0.67	-728	368.55	0	0	0	No, e>l/2
SLV 12	3.78	-4248	-191.68	57792	274.27	1.431	Si

Verifica a taglio nel piano secondo D.M. 17-01-18 (N.T.C.) §7.8.2.2.2 con rottura per scorrimento in combinazioni non sismiche, γM = 3

Comb.	Quota	N	V par	M	σ0	σN	l'	fvd	Vt scorr.	Vt fess.diag.	Vt,lim	c.s.	Verifica
SLU 68	0.67	-4900	372	271.25		81079	0.2015	10833	655			1.76	Si
SLU 68	3.78	-2368	-65	20.96		32220	0.245	9852	724			11.09	Si
SLU 55	0.67	-4961	375	275.01		82183	0.2012	10833	654			1.74	Si
SLU 55	3.78	-2402	-66	22.08		32676	0.245	9912	729			11.05	Si
SLU 80	0.67	-5532	394	297.76		89494	0.206	10833	670			1.7	Si
SLU 80	3.78	-2592	17	32.05		35260	0.245	10257	754			43.17	Si

Comb.	Quota	N	V par	M	σ0	σN	l'	fvd	Vt scorr.	Vt fess.diag.	Vt,lim	c.s.	Verifica
SLU 84	0.67	-5689	402	306.02		91989	0.2061	10833	670			1.67	Si
SLU 84	3.78	-2663	22	34.07		36223	0.245	10385	763			34.33	Si
SLU 76	0.67	-5423	401	298.48		89310	0.2024	10833	658			1.64	Si
SLU 76	3.78	-2615	-51	26.73		35573	0.245	10299	757			14.79	Si
SLU 52	0.67	-4894	370	271.6		81149	0.201	10833	653			1.76	Si
SLU 52	3.78	-2367	-67	21.63		32202	0.245	9849	724			10.77	Si
SLU 82	0.67	-5622	397	302.62		90951	0.206	10833	670			1.68	Si
SLU 82	3.78	-2628	21	33.61		35749	0.245	10322	759			36.23	Si
SLU 78	0.67	-5563	396	298.92		89877	0.2063	10833	671			1.7	Si
SLU 78	3.78	-2607	22	32.65		35469	0.245	10285	756			34.16	Si
SLU 73	0.67	-5355	396	295.08		88274	0.2022	10833	657			1.66	Si
SLU 73	3.78	-2580	-52	26.28		35100	0.245	10236	752			14.34	Si
SLU 75	0.67	-5496	391	295.51		88840	0.2062	10833	670			1.71	Si
SLU 75	3.78	-2572	21	32.19		34996	0.245	10222	751			36.06	Si

Verifica a taglio nel piano secondo D.M. 17-01-18 (N.T.C.) §7.8.2.2.2 con rottura per scorrimento in combinazioni sismiche, γM = 2

Comb.	Quota	N	V par	M	σ0	σN	l'	fvd	Vt scorr.	Vt fess.diag.	Vt,lim	c.s.	Verifica
SLV 5	0.67	-6965	-722	32.87		94757	0.245	16250	1194			1.65	Si
SLV 5	3.78	833	2405	243.19		0	0	8333	0			0	No, Vu<V
SLV 13	0.67	-4114	473	11.76		55971	0.245	16250	1194			2.53	Si
SLV 13	3.78	-296	1377	168.13		0	0	8333	0			0	No, Vu<V
SLV 9	0.67	-6597	-445	-43.42		89754	0.245	16250	1194			2.69	Si
SLV 9	3.78	1190	2736	285.65		0	0	8333	0			0	No, Vu<V
SLV 6	0.67	-6965	-722	32.87		94757	0.245	16250	1194			1.65	Si
SLV 6	3.78	833	2405	243.19		0	0	8333	0			0	No, Vu<V
SLV 10	0.67	-6597	-445	-43.42		89754	0.245	16250	1194			2.69	Si
SLV 10	3.78	1190	2736	285.65		0	0	8333	0			0	No, Vu<V
SLV 8	0.67	-1096	972	444.84		0	0	8333	0			0	No, Vu<V
SLV 8	3.78	-4605	-2578	-234.14		71400	0.215	16250	1048			0.41	No, Vu<V
SLV 12	0.67	-728	1250	368.55		0	0	8333	0			0	No, Vu<V
SLV 12	3.78	-4248	-2247	-191.68		60994	0.2322	16250	1132			0.5	No, Vu<V
SLV 11	0.67	-728	1250	368.55		0	0	8333	0			0	No, Vu<V
SLV 11	3.78	-4248	-2247	-191.68		60994	0.2322	16250	1132			0.5	No, Vu<V
SLV 14	0.67	-4114	473	11.76		55971	0.245	16250	1194			2.53	Si
SLV 14	3.78	-296	1377	168.13		0	0	8333	0			0	No, Vu<V
SLV 7	0.67	-1096	972	444.84		0	0	8333	0			0	No, Vu<V
SLV 7	3.78	-4605	-2578	-234.14		71400	0.215	16250	1048			0.41	No, Vu<V

Verifica a pressoflessione fuori piano D.M. 17-01-18 (N.T.C.)

quota 2.51 Wa 0.05 denominatore 8 γM = 2

Comb.	fd	Sa	σ0	N	M	Mc	Coeff.s.	Verifica
SLV 8	143750	0.3	123757	-9097	22.25	0	0	No, Rottura per schiacciamento
SLV 13	143750	0.3	0	1223	22.25	0	0	No, Trazione
SLV 5	143750	0.3	0	2196	22.25	0	0	No, Trazione
SLV 6	143750	0.3	0	2196	22.25	0	0	No, Trazione
SLV 7	143750	0.3	123757	-9097	22.25	0	0	No, Rottura per schiacciamento
SLV 9	143750	0.3	0	3571	22.25	0	0	No, Trazione
SLV 10	143750	0.3	0	3571	22.25	0	0	No, Trazione
SLV 14	143750	0.3	0	1223	22.25	0	0	No, Trazione
SLV 12	143750	0.3	105052	-7722	22.25	162.44	7.3	Si
SLV 11	143750	0.3	105052	-7722	22.25	162.44	7.3	Si

Verifica dei meccanismi locali di collasso con analisi cinematica lineare

forza di aggancio al piano = 0 quota mezzeria = 2.51 Wa = 0.05 Ta = 0.0754

Comb.	N top	N base	V orto	α0	M*	e*	a0*	aLim	Verifica
SLV 3	-1892	-3579	-1	0.045	230.8	0.952	0.68844	9.5486	No
SLV 4	-1892	-3579	-1	0.045	230.8	0.952	0.68844	9.5486	No
SLV 16	-1462	-2353	-3	0.045	187.2	0.942	0.6902	9.5486	No
SLV 15	-1462	-2353	-3	0.045	187.2	0.942	0.6902	9.5486	No
SLV 2	-1423	-5340	3	0.045	183.3	0.941	0.69801	9.5486	No
SLV 1	-1423	-5340	3	0.045	183.3	0.941	0.69801	9.5486	No
SLV 11	-2159	-728	-6	0.042	258	0.956	0.64434	8.44994	No
SLV 12	-2159	-728	-6	0.042	258	0.956	0.64434	8.44994	No
SLV 8	-2288	-1096	-5	0.043	271.1	0.958	0.64618	8.44994	No
SLV 7	-2288	-1096	-5	0.043	271.1	0.958	0.64618	8.44994	No

Tabella dei coefficienti di sicurezza minimi

Stato limite	Coeff.s.	Comb.	Verifica
PF_SLU	0.092	SLU 83	No
V_SLU	1.641	SLU 76	Si
PF_SLV	0	SLV 10	No
V_SLV	0	SLV 5	No
PFFP_SLV	0	SLV 14	No
R_SLV	0.072	SLV 3	No

Maschio 68

Verifiche condotte secondo D.M. 17-01-18 (N.T.C.)

Dati geometrici

X ini.	Y ini.	X fin.	Y fin.	Quota i.	Quota.s	l	Sp.	h netta	h ini.	h fin.	a	a.s.,sx	a.s.,dx
-13.753	-3.254	-15.3	-3.254	L3	L4	1.547	0.28	3.68	3.68	3.68			

Caratteristiche del materiale

(Circolare 7 21-01-19 C8.5.I) Muratura in mattoni pieni e malta di calce LC2_Corti

fb	fk	fvk0	fmedio	τ0	fv0	μ	ϕ	fv,lim	E	G	FC
600000			345000	9000	20000	0.58	0.77	32500	320000000	128000000	1.2

Verifica a pressoflessione nel piano secondo D.M. 17-01-18 NTC §7.8.2.2.1 in combinazioni non sismiche, γM = 3

Comb.	Quota	N	M	σ0	Mu	c.s.	Verifica
SLU 83	0.67	-9605	-2972.06	22175	5406.41	1.819	Si
SLU 83	2.77	-17270	-1063.59	39873	6819.25	6.412	Si
SLU 78	0.67	-9523	-2874.49	21986	5377.45	1.871	Si
SLU 78	2.77	-16899	-1079.5	39016	6810.19	6.309	Si
SLU 84	0.67	-9610	-2968.64	22188	5408.48	1.822	Si
SLU 84	2.77	-17342	-1038.71	40038	6820.3	6.566	Si
SLU 74	0.67	-9374	-2863.03	21642	5324.02	1.86	Si
SLU 74	2.77	-16625	-1063.1	38382	6799.61	6.396	Si
SLU 81	0.67	-9462	-2957.18	21845	5355.62	1.811	Si
SLU 81	2.77	-17067	-1022.3	39404	6815.04	6.666	Si
SLU 73	0.67	-9192	-2825.31	21222	5257.32	1.861	Si
SLU 73	2.77	-16438	-985.74	37952	6790.54	6.889	Si
SLU 76	0.67	-9335	-2840.19	21552	5309.8	1.87	Si
SLU 76	2.77	-16641	-1027.03	38421	6800.34	6.621	Si
SLU 77	0.67	-9517	-2877.91	21972	5375.36	1.868	Si
SLU 77	2.77	-16827	-1104.39	38851	6807.75	6.164	Si
SLU 82	0.67	-9468	-2953.76	21858	5357.73	1.814	Si
SLU 82	2.77	-17139	-997.41	39570	6816.73	6.834	Si
SLU 75	0.67	-9380	-2859.62	21656	5326.14	1.863	Si
SLU 75	2.77	-16696	-1038.21	38548	6802.69	6.552	Si

Verifica a pressoflessione nel piano secondo D.M. 17-01-18 NTC §7.8.2.2.1 in combinazioni sismiche, γM = 2

Comb.	Quota	N	M	σ0	Mu	c.s.	Verifica
SLV 12	0.67	-988	-3199.93	0	0	0	No, e>l/2
SLV 12	2.77	-5175	-1310.49	11947	3610.99	2.755	Si
SLV 11	0.67	-988	-3199.93	0	0	0	No, e>l/2
SLV 11	2.77	-5175	-1310.49	11947	3610.99	2.755	Si
SLV 3	0.67	-5519	641.81	12743	3823.67	5.958	Si
SLV 3	2.77	-2465	-5047.67	0	0	0	No, e>l/2
SLV 13	0.67	-7722	-4592.92	17827	5100.93	1.111	Si
SLV 13	2.77	-20314	3451.34	46900	9681.05	2.805	Si
SLV 4	0.67	-5519	641.81	12743	3823.67	5.958	Si
SLV 4	2.77	-2465	-5047.67	0	0	0	No, e>l/2
SLV 14	0.67	-7722	-4592.92	17827	5100.93	1.111	Si
SLV 14	2.77	-20314	3451.34	46900	9681.05	2.805	Si
SLV 8	0.67	-1312	-1556.99	0	0	0	No, e>l/2
SLV 8	2.77	-1288	-3565.06	0	0	0	No, e>l/2
SLV 16	0.67	-4439	-4834.66	0	0	0	No, e>l/2
SLV 16	2.77	-15419	2467.57	35599	8451.36	3.425	Si
SLV 7	0.67	-1312	-1556.99	0	0	0	No, e>l/2
SLV 7	2.77	-1288	-3565.06	0	0	0	No, e>l/2
SLV 15	0.67	-4439	-4834.66	0	0	0	No, e>l/2
SLV 15	2.77	-15419	2467.57	35599	8451.36	3.425	Si

Verifica a taglio nel piano secondo D.M. 17-01-18 (N.T.C.) §7.8.2.2.2 con rottura per scorrimento in combinazioni non sismiche, γM = 3

Comb.	Quota	N	V par	M	σ0	σN	l'	fvd	Vt scorr.	Vt fess.diag.	Vt,lim	c.s.	Verifica
SLU 74	0.67	-9374	-4444	-2863.03		23844	1.4041	8735	3434			0.77	No, Vu<V
SLU 74	2.77	-16625	-3895	-1063.1		38382	1.5469	10673	4623			1.19	Si
SLU 81	0.67	-9462	-4587	-2957.18		24439	1.3827	8814	3412			0.74	No, Vu<V
SLU 81	2.77	-17067	-4046	-1022.3		39404	1.5469	10809	4682			1.16	Si
SLU 80	0.67	-9474	-4458	-2857.34		23903	1.4155	8743	3465			0.78	No, Vu<V
SLU 80	2.77	-16796	-3850	-1084.91		38779	1.5469	10726	4646			1.21	Si
SLU 84	0.67	-9610	-4633	-2968.64		24628	1.3937	8839	3449			0.74	No, Vu<V
SLU 84	2.77	-17342	-4033	-1038.71		40038	1.5469	10833	4692			1.16	Si
SLU 78	0.67	-9523	-4490	-2874.49		24039	1.4148	8761	3470			0.77	No, Vu<V
SLU 78	2.77	-16899	-3882	-1079.5		39016	1.5469	10758	4660			1.2	Si
SLU 73	0.67	-9192	-4447	-2825.31		23478	1.3983	8686	3401			0.76	No, Vu<V
SLU 73	2.77	-16438	-3841	-985.74		37952	1.5469	10616	4598			1.2	Si
SLU 82	0.67	-9468	-4617	-2953.76		24424	1.3844	8812	3416			0.74	No, Vu<V
SLU 82	2.77	-17139	-4032	-997.41		39570	1.5469	10832	4691			1.16	Si
SLU 75	0.67	-9380	-4475	-2859.62		23830	1.4058	8733	3437			0.77	No, Vu<V
SLU 75	2.77	-16696	-3882	-1038.21		38548	1.5469	10695	4632			1.19	Si
SLU 76	0.67	-9335	-4462	-2840.19		23685	1.4076	8714	3434			0.77	No, Vu<V
SLU 76	2.77	-16641	-3841	-1027.03		38421	1.5469	10678	4625			1.2	Si
SLU 83	0.67	-9605	-4602	-2972.06		24642	1.392	8841	3446			0.75	No, Vu<V
SLU 83	2.77	-17270	-4046	-1063.59		39873	1.5469	10833	4692			1.16	Si

Verifica a taglio nel piano secondo D.M. 17-01-18 (N.T.C.) §7.8.2.2.2 con rottura per scorrimento in combinazioni sismiche, γM = 2

Comb.	Quota	N	V par	M	σ0	σN	l'	fvd	Vt scorr.	Vt fess.diag.	Vt,lim	c.s.	Verifica
SLV 11	0.67	-988	-2691	-3199.93		0	0	8333	0			0	No, Vu<V
SLV 11	2.77	-5175	-1347	-1310.49		11947	1.5469	10723	4644			3.45	Si
SLV 16	0.67	-4439	-10324	-4834.66		0	0	8333	0			0	No, Vu<V
SLV 16	2.77	-15419	-7085	2467.57		35599	1.5469	15453	6693			0.94	No, Vu<V
SLV 13	0.67	-7722	-12006	-4592.92		51458	0.5359	16250	2438			0.2	No, Vu<V
SLV 13	2.77	-20314	-8830	3451.34		46900	1.5469	16250	7038			0.8	No, Vu<V
SLV 4	0.67	-5519	5874	641.81		12743	1.5469	10882	4713			0.8	No, Vu<V
SLV 4	2.77	-2465	3492	-5047.67		0	0	8333	0			0	No, Vu<V
SLV 8	0.67	-1312	2168	-1556.99		0	0	8333	0			0	No, Vu<V
SLV 8	2.77	-1288	1826	-3565.06		0	0	8333	0			0	No, Vu<V
SLV 12	0.67	-988	-2691	-3199.93		0	0	8333	0			0	No, Vu<V
SLV 12	2.77	-5175	-1347	-1310.49		11947	1.5469	10723	4644			3.45	Si
SLV 15	0.67	-4439	-10324	-4834.66		0	0	8333	0			0	No, Vu<V
SLV 15	2.77	-15419	-7085	2467.57		35599	1.5469	15453	6693			0.94	No, Vu<V
SLV 7	0.67	-1312	2168	-1556.99		0	0	8333	0			0	No, Vu<V
SLV 7	2.77	-1288	1826	-3565.06		0	0	8333	0			0	No, Vu<V
SLV 14	0.67	-7722	-12006	-4592.92		51458	0.5359	16250	2438			0.2	No, Vu<V

Comb.	Quota	N	V par	M	σ0	σN	l'	fvd	Vt scorr.	Vt fess.diag.	Vt,lim	c.s.	Verifica
SLV 14	2.77	-20314	-8830	3451.34		46900	1.5469	16250	7038			0.8	No, Vu<V
SLV 3	0.67	-5519	5874	641.81		12743	1.5469	10882	4713			0.8	No, Vu<V
SLV 3	2.77	-2465	3492	-5047.67		0	0	8333	0			0	No, Vu<V

Verifica a pressoflessione fuori piano D.M. 17-01-18 (N.T.C.)

quota 2.51 Wa 0.05 denominatore 8 γM = 2

Comb.	fd	Sa	σ0	N	M	Mc	Coeff.s.	Verifica
SLV 8	143750	0.3	0	-903	134.25	0	0	No, e>t/2
SLV 7	143750	0.3	0	-903	134.25	0	0	No, e>t/2
SLV 3	143750	0.3	5955	-2579	134.25	343.49	2.56	Si
SLV 4	143750	0.3	5955	-2579	134.25	343.49	2.56	Si
SLV 12	143750	0.3	9994	-4329	134.25	556.43	4.14	Si
SLV 11	143750	0.3	9994	-4329	134.25	556.43	4.14	Si
SLV 1	143750	0.3	17181	-7442	134.25	895.34	6.67	Si
SLV 2	143750	0.3	17181	-7442	134.25	895.34	6.67	Si
SLV 15	143750	0.3	32318	-13998	134.25	1441.38	10.74	Si
SLV 16	143750	0.3	32318	-13998	134.25	1441.38	10.74	Si

Verifica dei meccanismi locali di collasso con analisi cinematica lineare

forza di aggancio al piano = 0 quota mezzeria = 2.51 Wa = 0.05 Ta = 0.0808

Comb.	N top	N base	V orto	α0	M*	e*	a0*	aLim	Verifica
SLV 11	-4626	-988	-172	0.019	700.8	0.917	0.29513	9.1791	No
SLV 12	-4626	-988	-172	0.019	700.8	0.917	0.29513	9.1791	No
SLV 7	-5485	-1312	-140	0.026	786.9	0.924	0.40373	9.1791	No
SLV 8	-5485	-1312	-140	0.026	786.9	0.924	0.40373	9.1791	No
SLV 5	-16906	-12253	206	0.03	1945.6	0.965	0.44842	9.1791	No
SLV 6	-16906	-12253	206	0.03	1945.6	0.965	0.44842	9.1791	No
SLV 1	-13910	-8802	122	0.034	1640.8	0.959	0.50942	10.39734	No
SLV 2	-13910	-8802	122	0.034	1640.8	0.959	0.50942	10.39734	No
SLV 15	-7622	-4439	-88	0.034	1002.6	0.938	0.53169	10.39734	No
SLV 16	-7622	-4439	-88	0.034	1002.6	0.938	0.53169	10.39734	No

Tabella dei coefficienti di sicurezza minimi

Stato limite	Coeff.s.	Comb.	Verifica
PF_SLU	1.811	SLU 81	Si
V_SLU	0.74	SLU 82	No
PF_SLV	0	SLV 3	No
V_SLV	0	SLV 3	No
PFFP_SLV	0	SLV 7	No
R_SLV	0.032	SLV 11	No

Maschio 69

Verifiche condotte secondo D.M. 17-01-18 (N.T.C.)

Dati geometrici

X ini.	Y ini.	X fin.	Y fin.	Quota i.	Quota.s	l	Sp.	h netta	h ini.	h fin.	a	a.s.,sx	a.s.,dx
-16.45	-4.784	-16.992	-4.784	L3	L4	0.542	0.3	3.68	3.68	3.68			

Caratteristiche del materiale

(Circolare 7 21-01-19 C8.5.I) Muratura in mattoni pieni e malta di calce LC2_Corti

fb	fk	fvk0	fmedio	τ0	fv0	μ	ϕ	fv,lim	E	G	FC
600000			345000	9000	20000	0.58	0.77	32500	320000000	128000000	1.2

Verifica a pressoflessione nel piano secondo D.M. 17-01-18 NTC §7.8.2.2.1 in combinazioni non sismiche, γM = 3

Comb.	Quota	N	M	σ0	Mu	c.s.	Verifica
SLU 44	0.67	-7397	78.6	45482	885.49	11.266	Si
SLU 44	3.78	-6779	144.39	41683	897.23	6.214	Si
SLU 76	0.67	-8712	112.23	53570	808.49	7.204	Si
SLU 76	3.78	-7921	148.43	48705	863.29	5.816	Si
SLU 80	0.67	-8925	112.91	54881	789.34	6.991	Si
SLU 80	3.78	-7818	139.54	48072	868.54	6.224	Si
SLU 73	0.67	-8608	110.84	52929	817.17	7.372	Si
SLU 73	3.78	-7822	146.29	48095	868.35	5.936	Si
SLU 68	0.67	-8056	94.16	49534	855.77	9.088	Si
SLU 68	3.78	-7349	148.19	45185	886.97	5.985	Si
SLU 78	0.67	-8944	114.05	54996	787.57	6.906	Si
SLU 78	3.78	-7817	139.12	48065	868.6	6.244	Si
SLU 55	0.67	-8157	98.04	50158	849.6	8.666	Si
SLU 55	3.78	-7451	146.76	45813	883.73	6.021	Si
SLU 47	0.67	-7501	79.98	46123	881.98	11.027	Si
SLU 47	3.78	-6878	146.53	42293	896.39	6.118	Si
SLU 52	0.67	-8053	96.66	49518	855.92	8.855	Si
SLU 52	3.78	-7352	144.62	45203	886.88	6.132	Si
SLU 65	0.67	-7952	92.78	48893	861.65	9.287	Si
SLU 65	3.78	-7249	146.05	44576	889.71	6.092	Si

Verifica a pressoflessione nel piano secondo D.M. 17-01-18 NTC §7.8.2.2.1 in combinazioni sismiche, γM = 2

Comb.	Quota	N	M	σ0	Mu	c.s.	Verifica
SLV 9	0.67	-11945	223.96	73450	1291.49	5.767	Si
SLV 9	3.78	-2427	-790.56	0	0	0	No, e>l/2
SLV 10	0.67	-11945	223.96	73450	1291.49	5.767	Si
SLV 10	3.78	-2427	-790.56	0	0	0	No, e>l/2
SLV 6	0.67	-12415	775.85	76335	1262.77	1.628	Si
SLV 6	3.78	-3592	-1081.87	0	0	0	No, e>l/2
SLV 2	0.67	-8910	1120.24	54787	1332.23	1.189	Si

Comb.	Quota	N	M	σ0	Mu	c.s.	Verifica
SLV 2	3.78	-6518	-702.8	40081	1187.28	1.689	Si
SLV 1	0.67	-8910	1120.24	54787	1332.23	1.189	Si
SLV 1	3.78	-6518	-702.8	40081	1187.28	1.689	Si
SLV 15	0.67	-3874	-976.11	23819	845.32	0.866	No, M>Mu
SLV 15	3.78	-3978	884.45	24457	862.33	0.975	No, M>Mu
SLV 5	0.67	-12415	775.85	76335	1262.77	1.628	Si
SLV 5	3.78	-3592	-1081.87	0	0	0	No, e>l/2
SLV 16	0.67	-3874	-976.11	23819	845.32	0.866	No, M>Mu
SLV 16	3.78	-3978	884.45	24457	862.33	0.975	No, M>Mu
SLV 12	0.67	-369	-631.72	0	0	0	No, e>l/2
SLV 12	3.78	-6904	1263.53	42453	1221.21	0.967	No, M>Mu
SLV 11	0.67	-369	-631.72	0	0	0	No, e>l/2
SLV 11	3.78	-6904	1263.53	42453	1221.21	0.967	No, M>Mu

Verifica a taglio nel piano secondo D.M. 17-01-18 (N.T.C.) §7.8.2.2.2 con rottura per scorrimento in combinazioni non sismiche, γM = 3

Comb.	Quota	N	V par	M	σ0	σN	l'	fvd	Vt scorr.	Vt fess.diag.	Vt,lim	c.s.	Verifica
SLU 52	0.67	-8053	239	96.66		49518	0.5421	10833	1762			7.36	Si
SLU 52	3.78	-7352	-20	144.62		45203	0.5421	10833	1762			89.02	Si
SLU 68	0.67	-8056	234	94.16		49534	0.5421	10833	1762			7.52	Si
SLU 68	3.78	-7349	-13	148.19		45185	0.5421	10833	1762			134.12	Si
SLU 82	0.67	-8998	228	117.88		55329	0.5421	10833	1762			7.73	Si
SLU 82	3.78	-7865	-24	135.36		48361	0.5421	10833	1762			73.14	Si
SLU 34	0.67	-7089	223	98.23		43587	0.5421	10833	1762			7.91	Si
SLU 34	3.78	-6597	-15	121.92		40565	0.5421	10833	1762			115.1	Si
SLU 76	0.67	-8712	253	112.23		53570	0.5421	10833	1762			6.97	Si
SLU 76	3.78	-7921	-19	148.43		48705	0.5421	10833	1762			90.92	Si
SLU 84	0.67	-9103	230	119.27		55970	0.5421	10833	1762			7.67	Si
SLU 84	3.78	-7964	-24	137.5		48971	0.5421	10833	1762			74.39	Si
SLU 80	0.67	-8925	224	112.91		54881	0.5421	10833	1762			7.88	Si
SLU 80	3.78	-7818	-21	139.54		48072	0.5421	10833	1762			85.5	Si
SLU 55	0.67	-8157	241	98.04		50158	0.5421	10833	1762			7.31	Si
SLU 55	3.78	-7451	-19	146.76		45813	0.5421	10833	1762			90.86	Si
SLU 65	0.67	-7952	233	92.78		48893	0.5421	10833	1762			7.58	Si
SLU 65	3.78	-7249	-14	146.05		44576	0.5421	10833	1762			130.14	Si
SLU 73	0.67	-8608	251	110.84		52929	0.5421	10833	1762			7.02	Si
SLU 73	3.78	-7822	-20	146.29		48095	0.5421	10833	1762			89.07	Si

Verifica a taglio nel piano secondo D.M. 17-01-18 (N.T.C.) §7.8.2.2.2 con rottura per scorrimento in combinazioni sismiche, γM = 2

Comb.	Quota	N	V par	M	σ0	σN	l'	fvd	Vt scorr.	Vt fess.diag.	Vt,lim	c.s.	Verifica
SLV 6	0.67	-12415	-1428	775.85		76335	0.5421	16250	2643			1.85	Si
SLV 6	3.78	-3592	-794	-1081.87		0	0	8333	0			0	No, Vu<V
SLV 9	0.67	-11945	-2346	223.96		73450	0.5421	16250	2643			1.13	Si
SLV 9	3.78	-2427	-167	-790.56		0	0	8333	0			0	No, Vu<V
SLV 12	0.67	-369	1672	-631.72		0	0	8333	0			0	No, Vu<V
SLV 12	3.78	-6904	763	1263.53		87129	0.2641	16250	1288			1.69	Si
SLV 5	0.67	-12415	-1428	775.85		76335	0.5421	16250	2643			1.85	Si
SLV 5	3.78	-3592	-794	-1081.87		0	0	8333	0			0	No, Vu<V
SLV 11	0.67	-369	1672	-631.72		0	0	8333	0			0	No, Vu<V
SLV 11	3.78	-6904	763	1263.53		87129	0.2641	16250	1288			1.69	Si
SLV 15	0.67	-3874	-806	-976.11		225637	0.0572	16250	279			0.35	No, Vu<V
SLV 15	3.78	-3978	1169	884.45		90762	0.1461	16250	712			0.61	No, Vu<V
SLV 7	0.67	-839	2590	-79.83		5298	0.5276	9393	1487			0.57	No, Vu<V
SLV 7	3.78	-8069	137	972.22		59546	0.4517	16250	2202			16.1	Si
SLV 10	0.67	-11945	-2346	223.96		73450	0.5421	16250	2643			1.13	Si
SLV 10	3.78	-2427	-167	-790.56		0	0	8333	0			0	No, Vu<V
SLV 8	0.67	-839	2590	-79.83		5298	0.5276	9393	1487			0.57	No, Vu<V
SLV 8	3.78	-8069	137	972.22		59546	0.4517	16250	2202			16.1	Si
SLV 16	0.67	-3874	-806	-976.11		225637	0.0572	16250	279			0.35	No, Vu<V
SLV 16	3.78	-3978	1169	884.45		90762	0.1461	16250	712			0.61	No, Vu<V

Verifica a pressoflessione fuori piano D.M. 17-01-18 (N.T.C.)

quota 2.51 Wa 0.05 denominatore 8 γM = 2

Comb.	fd	Sa	σ0	N	M	Mc	Coeff.s.	Verifica
SLV 16	143750	0.3	12949	-2106	49.24	282.4	5.74	Si
SLV 15	143750	0.3	12949	-2106	49.24	282.4	5.74	Si
SLV 14	143750	0.3	17399	-2830	49.24	364.01	7.39	Si
SLV 13	143750	0.3	17399	-2830	49.24	364.01	7.39	Si
SLV 12	143750	0.3	23234	-3779	49.24	459.02	9.32	Si
SLV 11	143750	0.3	23234	-3779	49.24	459.02	9.32	Si
SLV 7	143750	0.3	36502	-5936	49.24	624.45	12.68	Si
SLV 8	143750	0.3	36502	-5936	49.24	624.45	12.68	Si
SLV 9	143750	0.3	38070	-6191	49.24	639.36	12.99	Si
SLV 10	143750	0.3	38070	-6191	49.24	639.36	12.99	Si

Verifica dei meccanismi locali di collasso con analisi cinematica lineare

forza di aggancio al piano = 0 quota mezzeria = 2.51 Wa = 0.05 Ta = 0.0754

Comb.	N top	N base	V orto	α0	M*	e*	a0*	aLim	Verifica
SLV 3	-4974	-5437	-16	0.042	590.8	0.958	0.63456	9.5486	No
SLV 4	-4974	-5437	-16	0.042	590.8	0.958	0.63456	9.5486	No
SLV 2	-6396	-8910	-7	0.043	735.5	0.965	0.64577	9.5486	No
SLV 1	-6396	-8910	-7	0.043	735.5	0.965	0.64577	9.5486	No
SLV 13	-5029	-7347	8	0.043	596.4	0.958	0.657	9.5486	No
SLV 14	-5029	-7347	8	0.043	596.4	0.958	0.657	9.5486	No
SLV 15	-3607	-3874	-1	0.046	451.9	0.946	0.70261	9.5486	No
SLV 16	-3607	-3874	-1	0.046	451.9	0.946	0.70261	9.5486	No
SLV 10	-7166	-11945	13	0.042	813.9	0.969	0.62907	8.44994	No
SLV 9	-7166	-11945	13	0.042	813.9	0.969	0.62907	8.44994	No

Tabella dei coefficienti di sicurezza minimi

Stato limite	Coeff.s.	Comb.	Verifica
PF_SLU	5.816	SLU 76	Si
V_SLU	6.969	SLU 76	Si
PF_SLV	0	SLV 5	No
V_SLV	0	SLV 5	No
PFFP_SLV	5.736	SLV 15	Si
R_SLV	0.066	SLV 3	No

Maschio 70

Verifiche condotte secondo D.M. 17-01-18 (N.T.C.)

Dati geometrici

X ini.	Y ini.	X fin.	Y fin.	Quota i.	Quota.s	l	Sp.	h netta	h ini.	h fin.	a	a.s.,sx	a.s.,dx
-13.753	-4.784	-14.61	-4.784	L3	L4	0.858	0.3	3.68	3.68	3.68			

Caratteristiche del materiale

(Circolare 7 21-01-19 C8.5.I) Muratura in mattoni pieni e malta di calce LC2_Corti

fb	fk	fvk0	fmedio	τ0	fv0	μ	ϕ	fv,lim	E	G	FC
600000			345000	9000	20000	0.58	0.77	32500	320000000	128000000	1.2

Verifica a pressoflessione nel piano secondo D.M. 17-01-18 NTC §7.8.2.2.1 in combinazioni non sismiche, γM = 3

Comb.	Quota	N	M	σ0	Mu	c.s.	Verifica
SLU 78	0.67	-10900	115.33	42367	2242.82	19.447	Si
SLU 78	3.78	-9148	-195.82	35558	2210.24	11.287	Si
SLU 76	0.67	-10717	97.89	41658	2245.29	22.938	Si
SLU 76	3.78	-9014	-198.21	35038	2202.59	11.112	Si
SLU 44	0.67	-9178	74.83	35673	2211.84	29.56	Si
SLU 44	3.78	-7652	-185.33	29743	2083.01	11.239	Si
SLU 47	0.67	-9290	78.82	36109	2217.54	28.133	Si
SLU 47	3.78	-7757	-188.21	30150	2094.89	11.131	Si
SLU 68	0.67	-9901	85.79	38485	2239.63	26.106	Si
SLU 68	3.78	-8313	-192.6	32311	2150.48	11.166	Si
SLU 80	0.67	-10875	115.62	42270	2243.24	19.401	Si
SLU 80	3.78	-9128	-195.29	35480	2209.14	11.312	Si
SLU 73	0.67	-10605	93.89	41222	2246.12	23.923	Si
SLU 73	3.78	-8909	-195.33	34631	2196.09	11.243	Si
SLU 55	0.67	-10106	90.92	39282	2243.61	24.677	Si
SLU 55	3.78	-8458	-193.82	32877	2162.96	11.16	Si
SLU 65	0.67	-9789	81.79	38049	2236.73	27.346	Si
SLU 65	3.78	-8208	-189.72	31904	2140.97	11.285	Si
SLU 52	0.67	-9994	86.92	38846	2241.65	25.789	Si
SLU 52	3.78	-8354	-190.94	32470	2154.08	11.281	Si

Verifica a pressoflessione nel piano secondo D.M. 17-01-18 NTC §7.8.2.2.1 in combinazioni sismiche, γM = 2

Comb.	Quota	N	M	σ0	Mu	c.s.	Verifica
SLV 14	0.67	-3851	-1871.52	0	0	0	No, e>l/2
SLV 14	3.78	-5115	65.94	19883	1836.44	27.849	Si
SLV 15	0.67	174	-1972.4	0	0	0	No, Trazione
SLV 15	3.78	-3139	220.54	12200	1211.44	5.493	Si
SLV 13	0.67	-3851	-1871.52	0	0	0	No, e>l/2
SLV 13	3.78	-5115	65.94	19883	1836.44	27.849	Si
SLV 2	0.67	-15608	2154.93	60667	3369.51	1.564	Si
SLV 2	3.78	-9680	-491.37	37627	2872.53	5.846	Si
SLV 12	0.67	756	-680.84	0	0	0	No, Trazione
SLV 12	3.78	-2430	205.83	9447	961.53	4.671	Si
SLV 11	0.67	756	-680.84	0	0	0	No, Trazione
SLV 11	3.78	-2430	205.83	9447	961.53	4.671	Si
SLV 1	0.67	-15608	2154.93	60667	3369.51	1.564	Si
SLV 1	3.78	-9680	-491.37	37627	2872.53	5.846	Si
SLV 4	0.67	-11582	2054.05	45020	3136.43	1.527	Si
SLV 4	3.78	-7704	-336.78	29944	2493.69	7.404	Si
SLV 3	0.67	-11582	2054.05	45020	3136.43	1.527	Si
SLV 3	3.78	-7704	-336.78	29944	2493.69	7.404	Si
SLV 16	0.67	174	-1972.4	0	0	0	No, Trazione
SLV 16	3.78	-3139	220.54	12200	1211.44	5.493	Si

Verifica a taglio nel piano secondo D.M. 17-01-18 (N.T.C.) §7.8.2.2.2 con rottura per scorrimento in combinazioni non sismiche, γM = 3

Comb.	Quota	N	V par	M	σ0	σN	l'	fvd	Vt scorr.	Vt fess.diag.	Vt,lim	c.s.	Verifica
SLU 60	0.67	-10458	-16	126.46		40650	0.8576	10833	2787			170.13	Si
SLU 60	3.78	-8677	243	-178.84		33728	0.8576	10053	2586			10.62	Si
SLU 69	0.67	-10152	-14	123.85		39460	0.8576	10817	2783			199.99	Si
SLU 69	3.78	-8460	239	-181.51		32884	0.8576	9940	2557			10.68	Si
SLU 56	0.67	-10357	-5	128.97		40257	0.8576	10833	2787			557.75	Si
SLU 56	3.78	-8606	243	-182.73		33450	0.8576	10016	2577			10.59	Si
SLU 58	0.67	-10332	-4	129.27		40161	0.8576	10833	2787			769.69	Si
SLU 58	3.78	-8586	242	-182.2		33373	0.8576	10005	2574			10.63	Si
SLU 77	0.67	-10968	-7	135.94		42633	0.8576	10833	2787			379.36	Si
SLU 77	3.78	-9162	260	-187.12		35611	0.8576	10304	2651			10.19	Si
SLU 83	0.67	-11181	-11	137.42		43461	0.8576	10833	2787			254.67	Si
SLU 83	3.78	-9338	264	-186.11		36295	0.8576	10395	2674			10.13	Si
SLU 62	0.67	-10570	-9	130.45		41085	0.8576	10833	2787			324.31	Si
SLU 62	3.78	-8782	247	-181.72		34134	0.8576	10107	2600			10.52	Si
SLU 81	0.67	-11069	-19	133.42		43026	0.8576	10833	2787			148.79	Si
SLU 81	3.78	-9233	260	-183.23		35888	0.8576	10341	2660			10.23	Si
SLU 74	0.67	-10856	-15	131.94		42198	0.8576	10833	2787			184.15	Si

Comb.	Quota	N	V par	M	σ0	σN	l'	fvd	Vt scorr.	Vt fess.diag.	Vt,lim	c.s.	Verifica
SLU 74	3.78	-9057	256	-184.24		35204	0.8576	10249	2637			10.29	Si
SLU 79	0.67	-10943	-6	136.23		42537	0.8576	10833	2787			466.78	Si
SLU 79	3.78	-9142	259	-186.59		35533	0.8576	10293	2648			10.23	Si

Verifica a taglio nel piano secondo D.M. 17-01-18 (N.T.C.) §7.8.2.2.2 con rottura per scorrimento in combinazioni sismiche, γM = 2

Comb.	Quota	N	V par	M	σ0	σN	l'	fvd	Vt scorr.	Vt fess.diag.	Vt,lim	c.s.	Verifica
SLV 1	0.67	-15608	6194	2154.93		60667	0.8576	16250	4181			0.67	No, Vu<V
SLV 1	3.78	-9680	-824	-491.37		37627	0.8576	15859	4080			4.95	Si
SLV 16	0.67	174	-6233	-1972.4		0	0	8333	0			0	No, Vu<V
SLV 16	3.78	-3139	1184	220.54		12200	0.8576	10773	2772			2.34	Si
SLV 3	0.67	-11582	4671	2054.05		51183	0.7543	16250	3677			0.79	No, Vu<V
SLV 3	3.78	-7704	-1064	-336.78		29944	0.8576	14322	3685			3.46	Si
SLV 13	0.67	-3851	-4710	-1871.52		0	0	8333	0			0	No, Vu<V
SLV 13	3.78	-5115	1423	65.94		19883	0.8576	12310	3167			2.22	Si
SLV 14	0.67	-3851	-4710	-1871.52		0	0	8333	0			0	No, Vu<V
SLV 14	3.78	-5115	1423	65.94		19883	0.8576	12310	3167			2.22	Si
SLV 12	0.67	756	-4193	-680.84		0	0	8333	0			0	No, Vu<V
SLV 12	3.78	-2430	117	205.83		9447	0.8576	10223	2630			22.42	Si
SLV 15	0.67	174	-6233	-1972.4		0	0	8333	0			0	No, Vu<V
SLV 15	3.78	-3139	1184	220.54		12200	0.8576	10773	2772			2.34	Si
SLV 11	0.67	756	-4193	-680.84		0	0	8333	0			0	No, Vu<V
SLV 11	3.78	-2430	117	205.83		9447	0.8576	10223	2630			22.42	Si
SLV 2	0.67	-15608	6194	2154.93		60667	0.8576	16250	4181			0.67	No, Vu<V
SLV 2	3.78	-9680	-824	-491.37		37627	0.8576	15859	4080			4.95	Si
SLV 4	0.67	-11582	4671	2054.05		51183	0.7543	16250	3677			0.79	No, Vu<V
SLV 4	3.78	-7704	-1064	-336.78		29944	0.8576	14322	3685			3.46	Si

Verifica a pressoflessione fuori piano D.M. 17-01-18 (N.T.C.)

quota 2.51 Wa 0.05 denominatore 8 γM = 2

Comb.	fd	Sa	σ0	N	M	Mc	Coeff.s.	Verifica
SLV 7	143750	0.3	10928	-2811	77.89	384.01	4.93	Si
SLV 8	143750	0.3	10928	-2811	77.89	384.01	4.93	Si
SLV 4	143750	0.3	15422	-3967	77.89	520.01	6.68	Si
SLV 3	143750	0.3	15422	-3967	77.89	520.01	6.68	Si
SLV 11	143750	0.3	17338	-4461	77.89	574.15	7.37	Si
SLV 12	143750	0.3	17338	-4461	77.89	574.15	7.37	Si
SLV 2	143750	0.3	25683	-6607	77.89	782.79	10.05	Si
SLV 1	143750	0.3	25683	-6607	77.89	782.79	10.05	Si
SLV 16	143750	0.3	36788	-9464	77.89	992.24	12.74	Si
SLV 15	143750	0.3	36788	-9464	77.89	992.24	12.74	Si

Verifica dei meccanismi locali di collasso con analisi cinematica lineare

forza di aggancio al piano = 0 quota mezzeria = 2.51 Wa = 0.05 Ta = 0.0754

Comb.	N top	N base	V orto	α0	M*	e*	a0*	aLim	Verifica
SLV 15	-3440	174	5	0	0	0	0	9.5486	No, Trazione
SLV 11	-2119	756	-102	0	0	0	0	8.44994	No, Trazione
SLV 16	-3440	174	5	0	0	0	0	9.5486	No, Trazione
SLV 12	-2119	756	-102	0	0	0	0	8.44994	No, Trazione
SLV 7	-2976	-2771	-125	0.017	439.1	0.92	0.27018	8.44994	No
SLV 8	-2976	-2771	-125	0.017	439.1	0.92	0.27018	8.44994	No
SLV 13	-5429	-3851	73	0.035	686.9	0.945	0.53426	9.5486	No
SLV 14	-5429	-3851	73	0.035	686.9	0.945	0.53426	9.5486	No
SLV 10	-8750	-12662	125	0.031	1024.3	0.961	0.47409	8.44994	No
SLV 9	-8750	-12662	125	0.031	1024.3	0.961	0.47409	8.44994	No

Tabella dei coefficienti di sicurezza minimi

Stato limite	Coeff.s.	Comb.	Verifica
PF_SLU	11.112	SLU 76	Si
V_SLU	10.132	SLU 83	Si
PF_SLV	0	SLV 16	No
V_SLV	0	SLV 11	No
PFFP_SLV	4.93	SLV 7	Si
R_SLV	0	SLV 16	No

Maschio 71

Verifiche condotte secondo D.M. 17-01-18 (N.T.C.)

Dati geometrici

X ini.	Y ini.	X fin.	Y fin.	Quota i.	Quota.s	l	Sp.	h netta	h ini.	h fin.	a	a.s.,sx	a.s.,dx
-15.038	2.203	-15.038	6.536	L3	L4	4.332	0.14	3.68	3.68	3.68			

Caratteristiche del materiale

(Circolare 7 21-01-19 C8.5.I) Muratura in mattoni pieni e malta di calce LC2_Corti

fb	fk	fvk0	fmedio	τ0	fv0	μ	ϕ	fv,lim	E	G	FC
600000			345000	9000	20000	0.58	0.77	32500	320000000	128000000	1.2

Verifica a pressoflessione nel piano secondo D.M. 17-01-18 NTC §7.8.2.2.1 in combinazioni non sismiche, γM = 3

Comb.	Quota	N	M	σ0	Mu	c.s.	Verifica
SLU 82	0.67	-48183	4838.98	79440	2586.55	0.535	No, M>Mu
SLU 82	4.35	-29987	-1211.37	49440	25532.58	21.078	Si
SLU 80	0.67	-46593	5660.36	76819	5748.53	1.016	Si
SLU 80	4.35	-28946	-458.08	47724	25967.37	56.688	Si
SLU 81	0.67	-48188	4820.32	79448	2575.55	0.534	No, M>Mu
SLU 81	4.35	-29991	-1220.9	49447	25530.72	20.911	Si
SLU 75	0.67	-46891	5126.55	77309	5174.05	1.009	Si

Comb.	Quota	N	M	σ0	Mu	c.s.	Verifica
SLU 75	4.35	-29204	-873.97	48149	25868.39	29.599	Si
SLU 79	0.67	-46599	5641.7	76828	5738.27	1.017	Si
SLU 79	4.35	-28950	-467.61	47730	25965.88	55.528	Si
SLU 83	0.67	-48417	5271.34	79826	2101.76	0.399	No, M>Mu
SLU 83	4.35	-30148	-904.84	49706	25456.76	28.134	Si
SLU 74	0.67	-46896	5107.89	77318	5163.65	1.011	Si
SLU 74	4.35	-29208	-883.51	48156	25866.8	29.277	Si
SLU 78	0.67	-47120	5577.56	77686	4726.31	0.847	No, M>Mu
SLU 78	4.35	-29361	-557.9	48409	25805.28	46.254	Si
SLU 84	0.67	-48412	5289.99	79817	2112.87	0.399	No, M>Mu
SLU 84	4.35	-30144	-895.3	49699	25458.68	28.436	Si
SLU 77	0.67	-47125	5558.91	77695	4715.81	0.848	No, M>Mu
SLU 77	4.35	-29365	-567.44	48415	25803.64	45.474	Si

Verifica a pressoflessione nel piano secondo D.M. 17-01-18 NTC §7.8.2.2.1 in combinazioni sismiche, γM = 2

Comb.	Quota	N	M	σ0	Mu	c.s.	Verifica
SLV 15	0.67	-7126	27993.47	0	0	0	No, e>l/2
SLV 15	4.35	-2388	12673.14	0	0	0	No, e>l/2
SLV 1	0.67	-57025	-20835.26	94017	28478.88	1.367	Si
SLV 1	4.35	-37148	-13904.94	61246	40134.47	2.886	Si
SLV 11	0.67	-12448	42255.3	0	0	0	No, e>l/2
SLV 11	4.35	-5649	15634.69	0	0	0	No, e>l/2
SLV 7	0.67	-25015	33808.16	41243	35897.58	1.062	Si
SLV 7	4.35	-14315	10087.09	23602	25019.81	2.48	Si
SLV 8	0.67	-25015	33808.16	41243	35897.58	1.062	Si
SLV 8	4.35	-14315	10087.09	23602	25019.81	2.48	Si
SLV 2	0.67	-57025	-20835.26	94017	28478.88	1.367	Si
SLV 2	4.35	-37148	-13904.94	61246	40134.47	2.886	Si
SLV 16	0.67	-7126	27993.47	0	0	0	No, e>l/2
SLV 16	4.35	-2388	12673.14	0	0	0	No, e>l/2
SLV 5	0.67	-51703	-35097.09	85244	33863.27	0.965	No, M>Mu
SLV 5	4.35	-33887	-16866.49	55870	39841.34	2.362	Si
SLV 6	0.67	-51703	-35097.09	85244	33863.27	0.965	No, M>Mu
SLV 6	4.35	-33887	-16866.49	55870	39841.34	2.362	Si
SLV 12	0.67	-12448	42255.3	0	0	0	No, e>l/2
SLV 12	4.35	-5649	15634.69	0	0	0	No, e>l/2

Verifica a taglio nel piano secondo D.M. 17-01-18 (N.T.C.) §7.8.2.2.2 con rottura per scorrimento in combinazioni non sismiche, γM = 3

Comb.	Quota	N	V par	M	σ0	σN	l'	fvd	Vt scorr.	Vt fess.diag.	Vt,lim	c.s.	Verifica
SLU 76	0.67	-46361	1138	5221.78		76435	4.3324	10833	6571			5.77	Si
SLU 76	4.35	-28786	20	-767.79		47460	4.3324	10833	6571			335.44	Si
SLU 84	0.67	-48412	1184	5289.99		79817	4.3324	10833	6571			5.55	Si
SLU 84	4.35	-30144	21	-895.3		49699	4.3324	10833	6571			306.93	Si
SLU 74	0.67	-46896	1144	5107.89		77318	4.3324	10833	6571			5.74	Si
SLU 74	4.35	-29208	17	-883.51		48156	4.3324	10833	6571			390.5	Si
SLU 75	0.67	-46891	1147	5126.55		77309	4.3324	10833	6571			5.73	Si
SLU 75	4.35	-29204	20	-873.97		48149	4.3324	10833	6571			331.73	Si
SLU 81	0.67	-48188	1182	4820.32		79448	4.3324	10833	6571			5.56	Si
SLU 81	4.35	-29991	36	-1220.9		49447	4.3324	10833	6571			184.89	Si
SLU 77	0.67	-47125	1143	5558.91		77695	4.3324	10833	6571			5.75	Si
SLU 77	4.35	-29365	0	-567.44		48415	4.3324	10833	6571			1000	Si
SLU 82	0.67	-48183	1185	4838.98		79440	4.3324	10833	6571			5.54	Si
SLU 82	4.35	-29987	39	-1211.37		49440	4.3324	10833	6571			170.58	Si
SLU 83	0.67	-48417	1181	5271.34		79826	4.3324	10833	6571			5.56	Si
SLU 83	4.35	-30148	18	-904.84		49706	4.3324	10833	6571			356.59	Si
SLU 73	0.67	-46132	1139	4770.76		76058	4.3324	10833	6571			5.77	Si
SLU 73	4.35	-28629	37	-1083.85		47201	4.3324	10833	6571			179.03	Si
SLU 78	0.67	-47120	1146	5577.56		77686	4.3324	10833	6571			5.73	Si
SLU 78	4.35	-29361	3	-557.9		48409	4.3324	10833	6571			1000	Si

Verifica a taglio nel piano secondo D.M. 17-01-18 (N.T.C.) §7.8.2.2.2 con rottura per scorrimento in combinazioni sismiche, γM = 2

Comb.	Quota	N	V par	M	σ0	σN	l'	fvd	Vt scorr.	Vt fess.diag.	Vt,lim	c.s.	Verifica
SLV 15	0.67	-7126	1688	27993.47		0	0	8333	0			0	No, Vu<V
SLV 15	4.35	-2388	1982	12673.14		0	0	8333	0			0	No, Vu<V
SLV 8	0.67	-25015	14135	33808.16		73107	2.4441	16250	5560			0.39	No, Vu<V
SLV 8	4.35	-14315	9349	10087.09		23602	4.3324	13054	7918			0.85	No, Vu<V
SLV 11	0.67	-12448	12425	42255.3		0	0	8333	0			0	No, Vu<V
SLV 11	4.35	-5649	8889	15634.69		0	0	8333	0			0	No, Vu<V
SLV 12	0.67	-12448	12425	42255.3		0	0	8333	0			0	No, Vu<V
SLV 12	4.35	-5649	8889	15634.69		0	0	8333	0			0	No, Vu<V
SLV 5	0.67	-51703	-10840	-35097.09		85244	4.3324	16250	9856			0.91	No, Vu<V
SLV 5	4.35	-33887	-8852	-16866.49		55870	4.3324	16250	9856			1.11	Si
SLV 10	0.67	-39136	-12550	-26649.95		64524	4.3324	16250	9856			0.79	No, Vu<V
SLV 10	4.35	-25221	-9312	-11318.89		41582	4.3324	16250	9856			1.06	Si
SLV 9	0.67	-39136	-12550	-26649.95		64524	4.3324	16250	9856			0.79	No, Vu<V
SLV 9	4.35	-25221	-9312	-11318.89		41582	4.3324	16250	9856			1.06	Si
SLV 7	0.67	-25015	14135	33808.16		73107	2.4441	16250	5560			0.39	No, Vu<V
SLV 7	4.35	-14315	9349	10087.09		23602	4.3324	13054	7918			0.85	No, Vu<V
SLV 16	0.67	-7126	1688	27993.47		0	0	8333	0			0	No, Vu<V
SLV 16	4.35	-2388	1982	12673.14		0	0	8333	0			0	No, Vu<V
SLV 6	0.67	-51703	-10840	-35097.09		85244	4.3324	16250	9856			0.91	No, Vu<V
SLV 6	4.35	-33887	-8852	-16866.49		55870	4.3324	16250	9856			1.11	Si

Verifica a pressoflessione fuori piano D.M. 17-01-18 (N.T.C.)

quota 2.51 Wa 0.03 denominatore 8 γM = 2

Comb.	fd	Sa	σ0	N	M	Mc	Coeff.s.	Verifica
SLV 16	143750	0.3	5316	-3224	201.12	215.89	1.07	Si
SLV 15	143750	0.3	5316	-3224	201.12	215.89	1.07	Si
SLV 12	143750	0.3	11965	-7257	201.12	458.26	2.28	Si
SLV 11	143750	0.3	11965	-7257	201.12	458.26	2.28	Si

Comb.	fd	Sa	σ0	N	M	Mc	Coeff.s.	Verifica
SLV 14	143750	0.3	16968	-10292	201.12	620.37	3.08	Si
SLV 13	143750	0.3	16968	-10292	201.12	620.37	3.08	Si
SLV 7	143750	0.3	29316	-17781	201.12	946.05	4.7	Si
SLV 8	143750	0.3	29316	-17781	201.12	946.05	4.7	Si
SLV 1	143750	0.3	74804	-45371	201.12	1231.63	6.12	Si
SLV 2	143750	0.3	74804	-45371	201.12	1231.63	6.12	Si

Verifica dei meccanismi locali di collasso con analisi cinematica lineare

forza di aggancio al piano = 0 quota mezzeria = 2.51 Wa = 0.03 Ta = 0.1615

Comb.	N top	N base	V orto	α0	M*	e*	a0*	aLim	Verifica
SLV 1	-37148	-57025	-20	0.019	4096.6	0.976	0.29026	13.74169	No
SLV 2	-37148	-57025	-20	0.019	4096.6	0.976	0.29026	13.74169	No
SLV 6	-33887	-51703	-19	0.02	3764.5	0.974	0.29171	13.74169	No
SLV 5	-33887	-51703	-19	0.02	3764.5	0.974	0.29171	13.74169	No
SLV 4	-31276	-49018	-11	0.02	3498.5	0.972	0.29652	13.74169	No
SLV 3	-31276	-49018	-11	0.02	3498.5	0.972	0.29652	13.74169	No
SLV 9	-25221	-39136	-10	0.02	2882	0.967	0.30146	13.74169	No
SLV 10	-25221	-39136	-10	0.02	2882	0.967	0.30146	13.74169	No
SLV 8	-14315	-25015	10	0.021	1773.1	0.949	0.31823	13.74169	No
SLV 7	-14315	-25015	10	0.021	1773.1	0.949	0.31823	13.74169	No

Tabella dei coefficienti di sicurezza minimi

Stato limite	Coeff.s.	Comb.	Verifica
PF_SLU	0.399	SLU 83	No
V_SLU	5.544	SLU 82	Si
PF_SLV	0	SLV 11	No
V_SLV	0	SLV 11	No
PFFP_SLV	1.073	SLV 15	Si
R_SLV	0.021	SLV 1	No

Maschio 72

Verifiche condotte secondo D.M. 17-01-18 (N.T.C.)

Dati geometrici

X ini.	Y ini.	X fin.	Y fin.	Quota i.	Quota.s	l	Sp.	h netta	h ini.	h fin.	a	a.s.,sx	a.s.,dx
-13.753	-4.784	-13.753	-3.284	L3	Z medio 271 cm	1.5	0.28	2.04	2.04	2.039			

Caratteristiche del materiale

(Circolare 7 21-01-19 C8.5.I) Muratura in mattoni pieni e malta di calce LC2_Corti

fb	fk	fvk0	fmedio	τ0	fv0	μ	ϕ	fv,lim	E	G	FC
600000			345000	9000	20000	0.58	0.77	32500	320000000	128000000	1.2

Verifica a pressoflessione nel piano secondo D.M. 17-01-18 NTC §7.8.2.2.1 in combinazioni non sismiche, γM = 3

Comb.	Quota	N	M	σ0	Mu	c.s.	Verifica
SLU 80	0.67	-31899	448.84	75949	1618.13	3.605	Si
SLU 80	2.71	-21832	922.36	51980	5925.67	6.424	Si
SLU 81	0.67	-32137	428.71	76514	1463.02	3.413	Si
SLU 81	2.71	-22080	1008.96	52571	5872.91	5.821	Si
SLU 82	0.67	-32268	414.31	76827	1375.94	3.321	Si
SLU 82	2.71	-22122	998	52670	5863.81	5.876	Si
SLU 79	0.67	-31768	463.24	75636	1703.08	3.676	Si
SLU 79	2.71	-21790	933.32	51881	5934.25	6.358	Si
SLU 75	0.67	-31659	439.95	75377	1772.8	4.03	Si
SLU 75	2.71	-21640	915.91	51522	5964.73	6.512	Si
SLU 78	0.67	-32011	459.96	76214	1545.56	3.36	Si
SLU 78	2.71	-21912	932.6	52170	5909.02	6.336	Si
SLU 83	0.67	-32489	448.72	77352	1228.41	2.738	Si
SLU 83	2.71	-22352	1025.65	53218	5811.94	5.667	Si
SLU 74	0.67	-31527	454.36	75063	1856.36	4.086	Si
SLU 74	2.71	-21598	926.86	51423	5972.95	6.444	Si
SLU 77	0.67	-31879	474.36	75901	1631.15	3.439	Si
SLU 77	2.71	-21870	943.56	52071	5917.74	6.272	Si
SLU 84	0.67	-32620	434.31	77665	1139.3	2.623	Si
SLU 84	2.71	-22394	1014.7	53317	5802.34	5.718	Si

Verifica a pressoflessione nel piano secondo D.M. 17-01-18 NTC §7.8.2.2.1 in combinazioni sismiche, γM = 2

Comb.	Quota	N	M	σ0	Mu	c.s.	Verifica
SLV 8	0.67	-6836	1208.41	16275	4443.99	3.678	Si
SLV 8	2.71	-7476	416	17800	4790.36	11.515	Si
SLV 11	0.67	-7980	1342.26	18999	5054.27	3.765	Si
SLV 11	2.71	-7010	729.1	16689	4539.22	6.226	Si
SLV 5	0.67	-36498	-733	86898	7906.02	10.786	Si
SLV 5	2.71	-23147	353.24	55111	9530.46	26.98	Si
SLV 7	0.67	-6836	1208.41	16275	4443.99	3.678	Si
SLV 7	2.71	-7476	416	17800	4790.36	11.515	Si
SLV 14	0.67	-28595	236.5	68081	9496.87	40.155	Si
SLV 14	2.71	-16651	1053.59	39645	8436.72	8.008	Si
SLV 13	0.67	-28595	236.5	68081	9496.87	40.155	Si
SLV 13	2.71	-16651	1053.59	39645	8436.72	8.008	Si
SLV 12	0.67	-7980	1342.26	18999	5054.27	3.765	Si
SLV 12	2.71	-7010	729.1	16689	4539.22	6.226	Si
SLV 16	0.67	-19696	818.93	46894	9102.92	11.116	Si
SLV 16	2.71	-11950	1072.42	28452	6875.78	6.411	Si
SLV 15	0.67	-19696	818.93	46894	9102.92	11.116	Si
SLV 15	2.71	-11950	1072.42	28452	6875.78	6.411	Si

Comb.	Quota	N	M	σ0	Mu	c.s.	Verifica
SLV 6	0.67	-36498	-733	86898	7906.02	10.786	Si
SLV 6	2.71	-23147	353.24	55111	9530.46	26.98	Si

Verifica a taglio nel piano secondo D.M. 17-01-18 (N.T.C.) §7.8.2.2.2 con rottura per scorrimento in combinazioni non sismiche, γM = 3

Comb.	Quota	N	V par	M	σ0	σN	I'	fvd	Vt scorr.	Vt fess.diag.	Vt,lim	c.s.	Verifica
SLU 79	0.67	-31768	-1411	463.24		75636	1.5	10833	4550			3.22	Si
SLU 79	2.71	-21790	-1034	933.32		51881	1.5	10833	4550			4.4	Si
SLU 80	0.67	-31899	-1397	448.84		75949	1.5	10833	4550			3.26	Si
SLU 80	2.71	-21832	-1026	922.36		51980	1.5	10833	4550			4.43	Si
SLU 84	0.67	-32620	-1495	434.31		77665	1.5	10833	4550			3.04	Si
SLU 84	2.71	-22394	-1146	1014.7		53317	1.5	10833	4550			3.97	Si
SLU 83	0.67	-32489	-1509	448.72		77352	1.5	10833	4550			3.01	Si
SLU 83	2.71	-22352	-1153	1025.65		53218	1.5	10833	4550			3.95	Si
SLU 78	0.67	-32011	-1409	459.96		76214	1.5	10833	4550			3.23	Si
SLU 78	2.71	-21912	-1040	932.6		52170	1.5	10833	4550			4.37	Si
SLU 82	0.67	-32268	-1485	414.31		76827	1.5	10833	4550			3.06	Si
SLU 82	2.71	-22122	-1142	998		52670	1.5	10833	4550			3.98	Si
SLU 81	0.67	-32137	-1499	428.71		76514	1.5	10833	4550			3.04	Si
SLU 81	2.71	-22080	-1150	1008.96		52571	1.5	10833	4550			3.96	Si
SLU 74	0.67	-31527	-1413	454.36		75063	1.5	10833	4550			3.22	Si
SLU 74	2.71	-21598	-1044	926.86		51423	1.5	10833	4550			4.36	Si
SLU 75	0.67	-31659	-1399	439.95		75377	1.5	10833	4550			3.25	Si
SLU 75	2.71	-21640	-1037	915.91		51522	1.5	10833	4550			4.39	Si
SLU 77	0.67	-31879	-1423	474.36		75901	1.5	10833	4550			3.2	Si
SLU 77	2.71	-21870	-1048	943.56		52071	1.5	10833	4550			4.34	Si

Verifica a taglio nel piano secondo D.M. 17-01-18 (N.T.C.) §7.8.2.2.2 con rottura per scorrimento in combinazioni sismiche, γM = 2

Comb.	Quota	N	V par	M	σ0	σN	I'	fvd	Vt scorr.	Vt fess.diag.	Vt,lim	c.s.	Verifica
SLV 13	0.67	-28595	-5059	236.5		68081	1.5	16250	6825			1.35	Si
SLV 13	2.71	-16651	-4030	1053.59		39645	1.5	16250	6825			1.69	Si
SLV 6	0.67	-36498	-5784	-733		86898	1.5	16250	6825			1.18	Si
SLV 6	2.71	-23147	-4127	353.24		55111	1.5	16250	6825			1.65	Si
SLV 10	0.67	-37642	-7262	-599.15		89622	1.5	16250	6825			0.94	No, Vu<V
SLV 10	2.71	-22681	-5426	666.34		54000	1.5	16250	6825			1.26	Si
SLV 7	0.67	-6836	5436	1208.41		16275	1.5	11588	4867			0.9	No, Vu<V
SLV 7	2.71	-7476	4191	416		17800	1.5	11893	4995			1.19	Si
SLV 14	0.67	-28595	-5059	236.5		68081	1.5	16250	6825			1.35	Si
SLV 14	2.71	-16651	-4030	1053.59		39645	1.5	16250	6825			1.69	Si
SLV 8	0.67	-6836	5436	1208.41		16275	1.5	11588	4867			0.9	No, Vu<V
SLV 8	2.71	-7476	4191	416		17800	1.5	11893	4995			1.19	Si
SLV 9	0.67	-37642	-7262	-599.15		89622	1.5	16250	6825			0.94	No, Vu<V
SLV 9	2.71	-22681	-5426	666.34		54000	1.5	16250	6825			1.26	Si
SLV 11	0.67	-7980	3959	1342.26		18999	1.5	12133	5096			1.29	Si
SLV 11	2.71	-7010	2892	729.1		16689	1.5	11671	4902			1.69	Si
SLV 5	0.67	-36498	-5784	-733		86898	1.5	16250	6825			1.18	Si
SLV 5	2.71	-23147	-4127	353.24		55111	1.5	16250	6825			1.65	Si
SLV 12	0.67	-7980	3959	1342.26		18999	1.5	12133	5096			1.29	Si
SLV 12	2.71	-7010	2892	729.1		16689	1.5	11671	4902			1.69	Si

Verifica a pressoflessione fuori piano D.M. 17-01-18 (N.T.C.)

quota 1.69 Wa 0.05 denominatore 8 γM = 2

Comb.	fd	Sa	σ0	N	M	Mc	Coeff.s.	Verifica
SLV 12	143750	0.28	17470	-7337	38.52	880.37	22.85	Si
SLV 11	143750	0.28	17470	-7337	38.52	880.37	22.85	Si
SLV 8	143750	0.28	19244	-8083	38.52	953.37	24.75	Si
SLV 7	143750	0.28	19244	-8083	38.52	953.37	24.75	Si
SLV 16	143750	0.28	31410	-13193	38.52	1372.18	35.62	Si
SLV 15	143750	0.28	31410	-13193	38.52	1372.18	35.62	Si
SLV 4	143750	0.28	37326	-15678	38.52	1524.36	39.57	Si
SLV 3	143750	0.28	37326	-15678	38.52	1524.36	39.57	Si
SLV 13	143750	0.28	45135	-18957	38.52	1673.63	43.44	Si
SLV 14	143750	0.28	45135	-18957	38.52	1673.63	43.44	Si

Verifica dei meccanismi locali di collasso con analisi cinematica lineare

forza di aggancio al piano = 0 quota mezzeria = 1.69 Wa = 0.05 Ta = 0.0248

Comb.	N top	N base	V orto	α0	M*	e*	a0*	aLim	Verifica
SLV 2	-18207	-24782	25	0.07	1974.6	0.981	1.03827	3.83597	No
SLV 1	-18207	-24782	25	0.07	1974.6	0.981	1.03827	3.83597	No
SLV 5	-23147	-36498	66	0.068	2478.1	0.985	1.00476	3.69188	No
SLV 6	-23147	-36498	66	0.068	2478.1	0.985	1.00476	3.69188	No
SLV 9	-22681	-37642	63	0.068	2430.6	0.984	1.00719	3.69188	No
SLV 10	-22681	-37642	63	0.068	2430.6	0.984	1.00719	3.69188	No
SLV 14	-16651	-28595	13	0.071	1816.2	0.979	1.05226	3.83597	No
SLV 13	-16651	-28595	13	0.071	1816.2	0.979	1.05226	3.83597	No
SLV 12	-7010	-7980	-66	0.067	834.5	0.957	1.01631	3.69188	No
SLV 11	-7010	-7980	-66	0.067	834.5	0.957	1.01631	3.69188	No

Tabella dei coefficienti di sicurezza minimi

Stato limite	Coeff.s.	Comb.	Verifica
PF_SLU	2.623	SLU 84	Si
V_SLU	3.015	SLU 83	Si
PF_SLV	3.678	SLV 7	Si
V_SLV	0.895	SLV 7	No
PFFP_SLV	22.852	SLV 11	Si
R_SLV	0.271	SLV 1	No

Maschio 73

Verifiche condotte secondo D.M. 17-01-18 (N.T.C.)

Dati geometrici

X ini.	Y ini.	X fin.	Y fin.	Quota i.	Quota.s	l	Sp.	h netta	h ini.	h fin.	a	a.s.,sx	a.s.,dx
-13.753	-4.784	-13.753	-3.284	Z medio 271 cm	L4	1.5	0.28	1.64	1.64	1.641			

Caratteristiche del materiale

(Circolare 7 21-01-19 C8.5.I) Muratura in mattoni pieni e malta di calce LC2_Corti

fb	fk	fvk0	fmedio	τ0	fv0	μ	ϕ	fv,lim	E	G	FC
600000			345000	9000	20000	0.58	0.77	32500	320000000	128000000	1.2

Verifica a pressoflessione nel piano secondo D.M. 17-01-18 NTC §7.8.2.2.1 in combinazioni non sismiche, γM = 3

Comb.	Quota	N	M	σ0	Mu	c.s.	Verifica
SLU 83	2.71	-20348	-245.67	48446	6184.86	25.175	Si
SLU 83	4.35	-17041	488.88	40573	6415.07	13.122	Si
SLU 80	2.71	-20052	-177.45	47741	6225.03	35.081	Si
SLU 80	4.35	-16759	465.65	39901	6412.51	13.771	Si
SLU 77	2.71	-20093	-163.17	47840	6219.61	38.116	Si
SLU 77	4.35	-16791	478.41	39977	6412.98	13.405	Si
SLU 84	2.71	-20383	-254.62	48530	6179.82	24.271	Si
SLU 84	4.35	-17080	487.81	40666	6415.15	13.151	Si
SLU 75	2.71	-19864	-185.9	47294	6248.48	33.612	Si
SLU 75	4.35	-16590	465.24	39498	6409.3	13.776	Si
SLU 81	2.71	-20083	-259.46	47816	6220.93	23.977	Si
SLU 81	4.35	-16801	476.79	40001	6413.12	13.451	Si
SLU 78	2.71	-20129	-172.12	47924	6214.95	36.109	Si
SLU 78	4.35	-16830	477.33	40070	6413.48	13.436	Si
SLU 79	2.71	-20016	-168.51	47657	6229.57	36.97	Si
SLU 79	4.35	-16720	466.72	39808	6411.88	13.738	Si
SLU 82	2.71	-20119	-268.4	47900	6216.29	23.161	Si
SLU 82	4.35	-16840	475.71	40094	6413.6	13.482	Si
SLU 74	2.71	-19829	-176.96	47210	6252.72	35.335	Si
SLU 74	4.35	-16551	466.31	39405	6408.39	13.743	Si

Verifica a pressoflessione nel piano secondo D.M. 17-01-18 NTC §7.8.2.2.1 in combinazioni sismiche, γM = 2

Comb.	Quota	N	M	σ0	Mu	c.s.	Verifica
SLV 14	2.71	-15424	-777.27	36723	8091.48	10.41	Si
SLV 14	4.35	-13277	996.69	31612	7381.9	7.406	Si
SLV 12	2.71	-6547	873.11	15587	4283.87	4.906	Si
SLV 12	4.35	-5957	525.07	14183	3949.31	7.521	Si
SLV 9	2.71	-21052	-1256.76	50121	9312.36	7.41	Si
SLV 9	4.35	-17247	474.84	41063	8588.35	18.087	Si
SLV 15	2.71	-11073	-138.31	26363	6512.87	47.09	Si
SLV 15	4.35	-9890	1011.76	23548	5988.38	5.919	Si
SLV 13	2.71	-15424	-777.27	36723	8091.48	10.41	Si
SLV 13	4.35	-13277	996.69	31612	7381.9	7.406	Si
SLV 10	2.71	-21052	-1256.76	50121	9312.36	7.41	Si
SLV 10	4.35	-17247	474.84	41063	8588.35	18.087	Si
SLV 8	2.71	-7019	1101.08	16712	4544.42	4.127	Si
SLV 8	4.35	-5973	92.84	14220	3958.29	42.635	Si
SLV 16	2.71	-11073	-138.31	26363	6512.87	47.09	Si
SLV 16	4.35	-9890	1011.76	23548	5988.38	5.919	Si
SLV 7	2.71	-7019	1101.08	16712	4544.42	4.127	Si
SLV 7	4.35	-5973	92.84	14220	3958.29	42.635	Si
SLV 11	2.71	-6547	873.11	15587	4283.87	4.906	Si
SLV 11	4.35	-5957	525.07	14183	3949.31	7.521	Si

Verifica a taglio nel piano secondo D.M. 17-01-18 (N.T.C.) §7.8.2.2.2 con rottura per scorrimento in combinazioni non sismiche, γM = 3

Comb.	Quota	N	V par	M	σ0	σN	l'	fvd	Vt scorr.	Vt fess.diag.	Vt,lim	c.s.	Verifica
SLU 81	2.71	-20083	-1242	-259.46		47816	1.5	10833	4550			3.66	Si
SLU 81	4.35	-16801	-1150	476.79		40001	1.5	10833	4550			3.96	Si
SLU 75	2.71	-19864	-1133	-185.9		47294	1.5	10833	4550			4.01	Si
SLU 75	4.35	-16590	-1087	465.24		39498	1.5	10822	4545			4.18	Si
SLU 83	2.71	-20348	-1247	-245.67		48446	1.5	10833	4550			3.65	Si
SLU 83	4.35	-17041	-1152	488.88		40573	1.5	10833	4550			3.95	Si
SLU 39	2.71	-16543	-1128	-251.66		39386	1.5	10807	4539			4.02	Si
SLU 39	4.35	-13915	-1018	433.41		33130	1.5	9973	4189			4.11	Si
SLU 41	2.71	-16807	-1133	-237.87		40016	1.5	10833	4550			4.02	Si
SLU 41	4.35	-14155	-1021	445.51		33702	1.5	10049	4221			4.13	Si
SLU 84	2.71	-20383	-1244	-254.62		48530	1.5	10833	4550			3.66	Si
SLU 84	4.35	-17080	-1155	487.81		40666	1.5	10833	4550			3.94	Si
SLU 74	2.71	-19829	-1137	-176.96		47210	1.5	10833	4550			4	Si
SLU 74	4.35	-16551	-1085	466.31		39405	1.5	10810	4540			4.19	Si
SLU 77	2.71	-20093	-1142	-163.17		47840	1.5	10833	4550			3.98	Si
SLU 77	4.35	-16791	-1087	478.41		39977	1.5	10833	4550			4.19	Si
SLU 78	2.71	-20129	-1138	-172.12		47924	1.5	10833	4550			4	Si
SLU 78	4.35	-16830	-1090	477.33		40070	1.5	10833	4550			4.18	Si
SLU 82	2.71	-20119	-1239	-268.4		47900	1.5	10833	4550			3.67	Si
SLU 82	4.35	-16840	-1153	475.71		40094	1.5	10833	4550			3.95	Si

Verifica a taglio nel piano secondo D.M. 17-01-18 (N.T.C.) §7.8.2.2.2 con rottura per scorrimento in combinazioni sismiche, γM = 2

Comb.	Quota	N	V par	M	σ0	σN	l'	fvd	Vt scorr.	Vt fess.diag.	Vt,lim	c.s.	Verifica
SLV 5	2.71	-21524	-3852	-1028.79		51246	1.5	16250	6825			1.77	Si
SLV 5	4.35	-17263	-3303	42.61		41100	1.5	16250	6825			2.07	Si
SLV 14	2.71	-15424	-4058	-777.27		36723	1.5	15678	6585			1.62	Si
SLV 14	4.35	-13277	-4238	996.69		31612	1.5	14656	6156			1.45	Si
SLV 13	2.71	-15424	-4058	-777.27		36723	1.5	15678	6585			1.62	Si

Comb.	Quota	N	V par	M	σ0	σN	l'	fvd	Vt scorr.	Vt fess.diag.	Vt,lim	c.s.	Verifica
SLV 13	4.35	-13277	-4238	996.69		31612	1.5	14656	6156			1.45	Si
SLV 3	2.71	-12647	2689	621.59		30110	1.5	14355	6029			2.24	Si
SLV 3	4.35	-9942	2847	-429.01		23672	1.5	13068	5489			1.93	Si
SLV 7	2.71	-7019	3816	1101.08		16712	1.5	11676	4904			1.28	Si
SLV 7	4.35	-5973	3431	92.84		14220	1.5	11177	4695			1.37	Si
SLV 10	2.71	-21052	-5185	-1256.76		50121	1.5	16250	6825			1.32	Si
SLV 10	4.35	-17247	-4822	474.84		41063	1.5	16250	6825			1.42	Si
SLV 6	2.71	-21524	-3852	-1028.79		51246	1.5	16250	6825			1.77	Si
SLV 6	4.35	-17263	-3303	42.61		41100	1.5	16250	6825			2.07	Si
SLV 9	2.71	-21052	-5185	-1256.76		50121	1.5	16250	6825			1.32	Si
SLV 9	4.35	-17247	-4822	474.84		41063	1.5	16250	6825			1.42	Si
SLV 4	2.71	-12647	2689	621.59		30110	1.5	14355	6029			2.24	Si
SLV 4	4.35	-9942	2847	-429.01		23672	1.5	13068	5489			1.93	Si
SLV 8	2.71	-7019	3816	1101.08		16712	1.5	11676	4904			1.28	Si
SLV 8	4.35	-5973	3431	92.84		14220	1.5	11177	4695			1.37	Si

Verifica a pressoflessione fuori piano D.M. 17-01-18 (N.T.C.)

quota 3.53 Wa 0.05 denominatore 8 γM = 2

Comb.	fd	Sa	σ0	N	M	Mc	Coeff.s.	Verifica
SLV 11	143750	0.32	14236	-5979	28.4	739.58	26.05	Si
SLV 12	143750	0.32	14236	-5979	28.4	739.58	26.05	Si
SLV 8	143750	0.32	15551	-6532	28.4	798.04	28.1	Si
SLV 7	143750	0.32	15551	-6532	28.4	798.04	28.1	Si
SLV 15	143750	0.32	23253	-9767	28.4	1107.11	38.99	Si
SLV 16	143750	0.32	23253	-9767	28.4	1107.11	38.99	Si
SLV 3	143750	0.32	27635	-11607	28.4	1257.47	44.28	Si
SLV 4	143750	0.32	27635	-11607	28.4	1257.47	44.28	Si
SLV 14	143750	0.32	32296	-13565	28.4	1397.12	49.2	Si
SLV 13	143750	0.32	32296	-13565	28.4	1397.12	49.2	Si

Verifica dei meccanismi locali di collasso con analisi cinematica lineare

forza di aggancio al piano = 0 quota mezzeria = 3.53 Wa = 0.05 Ta = 0.016

Comb.	N top	N base	V orto	α0	M*	e*	a0*	aLim	Verifica
SLV 2	-13329	-16998	-6	0.089	1454.3	0.979	1.31699	3.66656	No
SLV 1	-13329	-16998	-6	0.089	1454.3	0.979	1.31699	3.66656	No
SLV 14	-13277	-15424	-1	0.089	1449	0.979	1.32216	3.66656	No
SLV 13	-13277	-15424	-1	0.089	1449	0.979	1.32216	3.66656	No
SLV 6	-17263	-21524	-4	0.088	1855	0.984	1.30202	3.58056	No
SLV 5	-17263	-21524	-4	0.088	1855	0.984	1.30202	3.58056	No
SLV 10	-17247	-21052	-2	0.088	1853.5	0.984	1.30321	3.58056	No
SLV 9	-17247	-21052	-2	0.088	1853.5	0.984	1.30321	3.58056	No
SLV 3	-9942	-12647	-6	0.09	1109.2	0.973	1.34069	3.66656	No
SLV 4	-9942	-12647	-6	0.09	1109.2	0.973	1.34069	3.66656	No

Tabella dei coefficienti di sicurezza minimi

Stato limite	Coeff.s.	Comb.	Verifica
PF_SLU	13.122	SLU 83	Si
V_SLU	3.648	SLU 83	Si
PF_SLV	4.127	SLV 7	Si
V_SLV	1.285	SLV 7	Si
PFFP_SLV	26.045	SLV 11	Si
R_SLV	0.359	SLV 1	No

Maschio 75

Verifiche condotte secondo D.M. 17-01-18 (N.T.C.)

Dati geometrici

X ini.	Y ini.	X fin.	Y fin.	Quota i.	Quota.s	l	Sp.	h netta	h ini.	h fin.	a	a.s.,sx	a.s.,dx
-13.753	-3.284	-13.753	-0.354	Z medio 169 cm	L4	2.93	0.28	2.66	1.641	3.68			

Caratteristiche del materiale

(Circolare 7 21-01-19 C8.5.I) Muratura in mattoni pieni e malta di calce LC2_Corti

fb	fk	fvk0	fmedio	τ0	fv0	μ	φ	fv,lim	E	G	FC
600000			345000	9000	20000	0.58	0.77	32500	320000000	128000000	1.2

Verifica a pressoflessione nel piano secondo D.M. 17-01-18 NTC §7.8.2.2.1 in combinazioni non sismiche, γM = 3

Comb.	Quota	N	M	σ0	Mu	c.s.	Verifica
SLU 78	2.71	-44714	2432.26	54503	21675.95	8.912	Si
SLU 78	4.35	-39621	2023.38	48296	23630.46	11.679	Si
SLU 81	2.71	-44627	2583.86	54397	21719.01	8.406	Si
SLU 81	4.35	-39448	2027.78	48084	23677.02	11.676	Si
SLU 80	2.71	-44392	2375.71	54111	21832.99	9.19	Si
SLU 80	4.35	-39299	1969.16	47903	23715.8	12.044	Si
SLU 77	2.71	-44823	2475.69	54637	21621.4	8.733	Si
SLU 77	4.35	-39710	2089.78	48404	23606.03	11.296	Si
SLU 82	2.71	-44517	2540.44	54263	21772.62	8.57	Si
SLU 82	4.35	-39359	1961.38	47976	23700.42	12.084	Si
SLU 83	2.71	-45429	2674.05	55375	21310.49	7.969	Si
SLU 83	4.35	-40236	2138.2	49045	23454.87	10.969	Si
SLU 41	2.71	-38300	2591.79	46685	23951.87	9.241	Si
SLU 41	4.35	-34078	2009.35	41539	24465.52	12.176	Si
SLU 74	2.71	-44021	2385.5	53659	22008.62	9.226	Si
SLU 74	4.35	-38922	1979.36	47444	23810.02	12.029	Si
SLU 79	2.71	-44502	2419.14	54245	21779.99	9.003	Si
SLU 79	4.35	-39389	2035.56	48012	23692.63	11.639	Si

Comb.	Quota	N	M	σ0	Mu	c.s.	Verifica
SLU 84	2.71	-45319	2630.62	55241	21367.95	8.123	Si
SLU 84	4.35	-40147	2071.8	48937	23481.35	11.334	Si

Verifica a pressoflessione nel piano secondo D.M. 17-01-18 NTC §7.8.2.2.1 in combinazioni sismiche, γM = 2

Comb.	Quota	N	M	σ0	Mu	c.s.	Verifica
SLV 12	2.71	-29406	7678.53	35844	30442.02	3.965	Si
SLV 12	4.35	-26342	1368.13	32109	28449.26	20.794	Si
SLV 16	2.71	-35582	5428.74	43372	33623.78	6.194	Si
SLV 16	4.35	-31546	710.83	38452	31670.38	44.554	Si
SLV 15	2.71	-35582	5428.74	43372	33623.78	6.194	Si
SLV 15	4.35	-31546	710.83	38452	31670.38	44.554	Si
SLV 11	2.71	-29406	7678.53	35844	30442.02	3.965	Si
SLV 11	4.35	-26342	1368.13	32109	28449.26	20.794	Si
SLV 7	2.71	-25714	6182.12	31344	28007.46	4.53	Si
SLV 7	4.35	-22979	1667.47	28010	25947.08	15.561	Si
SLV 10	2.71	-34745	-3737.46	42352	33257.69	8.898	Si
SLV 10	4.35	-30002	487.91	36571	30797.55	63.121	Si
SLV 5	2.71	-31053	-5233.86	37851	31399.22	5.999	Si
SLV 5	4.35	-26640	787.25	32472	28655.11	36.399	Si
SLV 6	2.71	-31053	-5233.86	37851	31399.22	5.999	Si
SLV 6	4.35	-26640	787.25	32472	28655.11	36.399	Si
SLV 8	2.71	-25714	6182.12	31344	28007.46	4.53	Si
SLV 8	4.35	-22979	1667.47	28010	25947.08	15.561	Si
SLV 9	2.71	-34745	-3737.46	42352	33257.69	8.898	Si
SLV 9	4.35	-30002	487.91	36571	30797.55	63.121	Si

Verifica a taglio nel piano secondo D.M. 17-01-18 (N.T.C.) §7.8.2.2.2 con rottura per scorrimento in combinazioni non sismiche, γM = 3

Comb.	Quota	N	V par	M	σ0	σN	I'	fvd	Vt scorr.	Vt fess.diag.	Vt,lim	c.s.	Verifica
SLU 41	2.71	-38300	1029	2591.79		46685	2.93	10833	8888			8.64	Si
SLU 41	4.35	-34078	461	2009.35		41539	2.93	10833	8888			19.27	Si
SLU 84	2.71	-45319	1092	2630.62		55241	2.93	10833	8888			8.14	Si
SLU 84	4.35	-40147	481	2071.8		48937	2.93	10833	8888			18.49	Si
SLU 42	2.71	-38190	1042	2548.36		46551	2.93	10833	8888			8.53	Si
SLU 42	4.35	-33989	483	1942.95		41431	2.93	10833	8888			18.4	Si
SLU 40	2.71	-37388	1065	2458.18		45573	2.93	10833	8888			8.35	Si
SLU 40	4.35	-33201	515	1832.53		40470	2.93	10833	8888			17.27	Si
SLU 73	2.71	-42715	984	2166.4		52066	2.93	10833	8888			9.03	Si
SLU 73	4.35	-37664	469	1704.05		45909	2.93	10833	8888			18.96	Si
SLU 39	2.71	-37497	1052	2501.61		45707	2.93	10833	8888			8.45	Si
SLU 39	4.35	-33290	493	1898.93		40579	2.93	10833	8888			18.04	Si
SLU 76	2.71	-43517	961	2256.58		53044	2.93	10833	8888			9.25	Si
SLU 76	4.35	-38452	437	1814.47		46870	2.93	10833	8888			20.33	Si
SLU 82	2.71	-44517	1115	2540.44		54263	2.93	10833	8888			7.97	Si
SLU 82	4.35	-39359	512	1961.38		47976	2.93	10833	8888			17.35	Si
SLU 81	2.71	-44627	1102	2583.86		54397	2.93	10833	8888			8.07	Si
SLU 81	4.35	-39448	490	2027.78		48084	2.93	10833	8888			18.13	Si
SLU 83	2.71	-45429	1079	2674.05		55375	2.93	10833	8888			8.24	Si
SLU 83	4.35	-40236	459	2138.2		49045	2.93	10833	8888			19.37	Si

Verifica a taglio nel piano secondo D.M. 17-01-18 (N.T.C.) §7.8.2.2.2 con rottura per scorrimento in combinazioni sismiche, γM = 2

Comb.	Quota	N	V par	M	σ0	σN	I'	fvd	Vt scorr.	Vt fess.diag.	Vt,lim	c.s.	Verifica
SLV 11	2.71	-29406	12762	7678.53		35844	2.93	15502	12718			1	No, Vu<V
SLV 11	4.35	-26342	12134	1368.13		32109	2.93	14755	12105			1	No, Vu<V
SLV 6	2.71	-31053	-11681	-5233.86		37851	2.93	15904	13047			1.12	Si
SLV 6	4.35	-26640	-11663	787.25		32472	2.93	14828	12165			1.04	Si
SLV 7	2.71	-25714	12378	6182.12		31344	2.93	14602	11979			0.97	No, Vu<V
SLV 7	4.35	-22979	10050	1667.47		28010	2.93	13935	11432			1.14	Si
SLV 9	2.71	-34745	-11298	-3737.46		42352	2.93	16250	13331			1.18	Si
SLV 9	4.35	-30002	-9579	487.91		36571	2.93	15647	12837			1.34	Si
SLV 12	2.71	-29406	12762	7678.53		35844	2.93	15502	12718			1	No, Vu<V
SLV 12	4.35	-26342	12134	1368.13		32109	2.93	14755	12105			1	No, Vu<V
SLV 2	2.71	-24877	-3708	-2984.07		30323	2.93	14398	11812			3.19	Si
SLV 2	4.35	-21436	-6495	1444.55		26129	2.93	13559	11124			1.71	Si
SLV 5	2.71	-31053	-11681	-5233.86		37851	2.93	15904	13047			1.12	Si
SLV 5	4.35	-26640	-11663	787.25		32472	2.93	14828	12165			1.04	Si
SLV 10	2.71	-34745	-11298	-3737.46		42352	2.93	16250	13331			1.18	Si
SLV 10	4.35	-30002	-9579	487.91		36571	2.93	15647	12837			1.34	Si
SLV 8	2.71	-25714	12378	6182.12		31344	2.93	14602	11979			0.97	No, Vu<V
SLV 8	4.35	-22979	10050	1667.47		28010	2.93	13935	11432			1.14	Si
SLV 1	2.71	-24877	-3708	-2984.07		30323	2.93	14398	11812			3.19	Si
SLV 1	4.35	-21436	-6495	1444.55		26129	2.93	13559	11124			1.71	Si

Verifica a pressoflessione fuori piano D.M. 17-01-18 (N.T.C.)

quota 3.53 Wa 0.05 denominatore 8 γM = 2

Comb.	fd	Sa	σ0	N	M	Mc	Coeff.s.	Verifica
SLV 4	143750	0.32	26852	-22029	145.94	2406.3	16.49	Si
SLV 3	143750	0.32	26852	-22029	145.94	2406.3	16.49	Si
SLV 2	143750	0.32	28101	-23054	145.94	2485.24	17.03	Si
SLV 1	143750	0.32	28101	-23054	145.94	2485.24	17.03	Si
SLV 7	143750	0.32	30648	-25143	145.94	2637.13	18.07	Si
SLV 8	143750	0.32	30648	-25143	145.94	2637.13	18.07	Si
SLV 6	143750	0.32	34812	-28559	145.94	2859.15	19.59	Si
SLV 5	143750	0.32	34812	-28559	145.94	2859.15	19.59	Si
SLV 11	143750	0.32	35151	-28838	145.94	2875.82	19.71	Si
SLV 12	143750	0.32	35151	-28838	145.94	2875.82	19.71	Si

Verifica dei meccanismi locali di collasso con analisi cinematica lineare

forza di aggancio al piano = 0 quota mezzeria = 3.53 Wa = 0.05 Ta = 0.0422

Comb.	N top	N base	V orto	α0	M*	e*	a0*	aLim	Verifica
SLV 2	-21436	-24877	107	0.052	2489.8	0.963	0.79192	5.63465	No
SLV 1	-21436	-24877	107	0.052	2489.8	0.963	0.79192	5.63465	No
SLV 16	-31546	-35582	-84	0.053	3519	0.973	0.79438	5.63465	No
SLV 15	-31546	-35582	-84	0.053	3519	0.973	0.79438	5.63465	No
SLV 5	-26640	-31053	159	0.051	3019.5	0.969	0.75987	5.25471	No
SLV 6	-26640	-31053	159	0.051	3019.5	0.969	0.75987	5.25471	No
SLV 14	-32644	-37184	-6	0.055	3630.9	0.974	0.82745	5.63465	No
SLV 13	-32644	-37184	-6	0.055	3630.9	0.974	0.82745	5.63465	No
SLV 11	-26342	-29406	-137	0.051	2989.1	0.969	0.77174	5.25471	No
SLV 12	-26342	-29406	-137	0.051	2989.1	0.969	0.77174	5.25471	No

Tabella dei coefficienti di sicurezza minimi

Stato limite	Coeff.s.	Comb.	Verifica
PF_SLU	7.969	SLU 83	Si
V_SLU	7.974	SLU 82	Si
PF_SLV	3.965	SLV 11	Si
V_SLV	0.968	SLV 7	No
PFFP_SLV	16.488	SLV 3	Si
R_SLV	0.141	SLV 1	No

Maschio 76

Verifiche condotte secondo D.M. 17-01-18 (N.T.C.)

Dati geometrici

X ini.	Y ini.	X fin.	Y fin.	Quota i.	Quota.s	l	Sp.	h netta	h ini.	h fin.	a	a.s.,sx	a.s.,dx
-13.753	-0.354	-13.753	1.046	L3	L4	1.4	0.28	3.68	3.68	3.68			

Caratteristiche del materiale

(Circolare 7 21-01-19 C8.5.I) Muratura in mattoni pieni e malta di calce LC2_Corti

fb	fk	fvk0	fmedio	τ0	fv0	μ	ϕ	fv,lim	E	G	FC
600000			345000	9000	20000	0.58	0.77	32500	320000000	128000000	1.2

Verifica a pressoflessione nel piano secondo D.M. 17-01-18 NTC §7.8.2.2.1 in combinazioni non sismiche, γM = 3

Comb.	Quota	N	M	σ0	Mu	c.s.	Verifica
SLU 61	0.67	-22760	-15.81	58060	4576.31	289.413	Si
SLU 61	4.35	-19537	-424.82	49840	5308.45	12.496	Si
SLU 82	0.67	-25272	14.29	64469	3689.67	258.125	Si
SLU 82	4.35	-21763	-427.75	55516	4851.48	11.342	Si
SLU 77	0.67	-25458	28.42	64944	3612.89	127.133	Si
SLU 77	4.35	-22164	-378.48	56542	4745.82	12.539	Si
SLU 63	0.67	-23253	-4.68	59318	4424.06	945	Si
SLU 63	4.35	-20080	-423.08	51225	5216.96	12.331	Si
SLU 84	0.67	-25765	25.42	65727	3483.09	136.995	Si
SLU 84	4.35	-22306	-426	56902	4707.02	11.049	Si
SLU 62	0.67	-23386	0.36	59658	4381.08	1000	Si
SLU 62	4.35	-20203	-417.57	51538	5194.55	12.44	Si
SLU 80	0.67	-25110	16.98	64057	3754.89	221.121	Si
SLU 80	4.35	-21796	-385.76	55603	4842.86	12.554	Si
SLU 83	0.67	-25898	30.46	66067	3425.43	112.449	Si
SLU 83	4.35	-22428	-420.5	57214	4672.67	11.112	Si
SLU 81	0.67	-25405	19.33	64809	3634.89	188.033	Si
SLU 81	4.35	-21885	-422.25	55829	4820.05	11.415	Si
SLU 78	0.67	-25325	23.38	64604	3667.98	156.878	Si
SLU 78	4.35	-22042	-383.98	56229	4778.75	12.445	Si

Verifica a pressoflessione nel piano secondo D.M. 17-01-18 NTC §7.8.2.2.1 in combinazioni sismiche, γM = 2

Comb.	Quota	N	M	σ0	Mu	c.s.	Verifica
SLV 12	0.67	-25874	1311.65	66004	8327.97	6.349	Si
SLV 12	4.35	-18705	-451.73	47717	7980.27	17.666	Si
SLV 10	0.67	-12197	-1043.43	31114	6363.64	6.099	Si
SLV 10	4.35	-12109	-217.19	30891	6333.58	29.161	Si
SLV 11	0.67	-25874	1311.65	66004	8327.97	6.349	Si
SLV 11	4.35	-18705	-451.73	47717	7980.27	17.666	Si
SLV 7	0.67	-21428	985.65	54664	8289.28	8.41	Si
SLV 7	4.35	-16589	-285.03	42318	7590.42	26.63	Si
SLV 2	0.67	-7352	-925.48	18755	4356.54	4.707	Si
SLV 2	4.35	-9832	61.89	25082	5469.79	88.38	Si
SLV 6	0.67	-7751	-1369.43	19774	4547.87	3.321	Si
SLV 6	4.35	-9993	-50.5	25492	5535.72	109.618	Si
SLV 1	0.67	-7352	-925.48	18755	4356.54	4.707	Si
SLV 1	4.35	-9832	61.89	25082	5469.79	88.38	Si
SLV 9	0.67	-12197	-1043.43	31114	6363.64	6.099	Si
SLV 9	4.35	-12109	-217.19	30891	6333.58	29.161	Si
SLV 8	0.67	-21428	985.65	54664	8289.28	8.41	Si
SLV 8	4.35	-16589	-285.03	42318	7590.42	26.63	Si
SLV 5	0.67	-7751	-1369.43	19774	4547.87	3.321	Si
SLV 5	4.35	-9993	-50.5	25492	5535.72	109.618	Si

Verifica a taglio nel piano secondo D.M. 17-01-18 (N.T.C.) §7.8.2.2.2 con rottura per scorrimento in combinazioni non sismiche, γM = 3

Comb.	Quota	N	V par	M	σ0	σN	l'	fvd	Vt scorr.	Vt fess.diag.	Vt,lim	c.s.	Verifica
SLU 55	0.67	-22016	-112	-27.61		56163	1.4	10833	4247			37.81	Si
SLU 55	4.35	-18947	413	-388.25		48333	1.4	10833	4247			10.28	Si
SLU 56	0.67	-22946	-129	-1.69		58535	1.4	10833	4247			32.83	Si
SLU 56	4.35	-19939	427	-375.55		50865	1.4	10833	4247			9.95	Si
SLU 57	0.67	-22813	-114	-6.73		58195	1.4	10833	4247			37.4	Si
SLU 57	4.35	-19817	437	-381.06		50553	1.4	10833	4247			9.71	Si

Comb.	Quota	N	V par	M	σ0	σN	l'	fvd	Vt scorr.	Vt fess.diag.	Vt,lim	c.s.	Verifica
SLU 58	0.67	-22732	-137	-8.09		57989	1.4	10833	4247			30.92	Si
SLU 58	4.35	-19694	412	-377.33		50239	1.4	10833	4247			10.3	Si
SLU 78	0.67	-25325	-184	23.38		64604	1.4	10833	4247			23.07	Si
SLU 78	4.35	-22042	410	-383.98		56229	1.4	10833	4247			10.36	Si
SLU 54	0.67	-22319	-115	-17.86		56937	1.4	10833	4247			36.98	Si
SLU 54	4.35	-19274	421	-382.81		49168	1.4	10833	4247			10.09	Si
SLU 59	0.67	-22598	-122	-13.13		57648	1.4	10833	4247			34.93	Si
SLU 59	4.35	-19571	423	-382.83		49926	1.4	10833	4247			10.05	Si
SLU 53	0.67	-22453	-131	-12.82		57277	1.4	10833	4247			32.51	Si
SLU 53	4.35	-19396	411	-377.3		49480	1.4	10833	4247			10.34	Si
SLU 63	0.67	-23253	-149	-4.68		59318	1.4	10833	4247			28.41	Si
SLU 63	4.35	-20080	422	-423.08		51225	1.4	10833	4247			10.07	Si
SLU 62	0.67	-23386	-165	0.36		59658	1.4	10833	4247			25.7	Si
SLU 62	4.35	-20203	411	-417.57		51538	1.4	10833	4247			10.33	Si

Verifica a taglio nel piano secondo D.M. 17-01-18 (N.T.C.) §7.8.2.2.2 con rottura per scorrimento in combinazioni sismiche, γM = 2

Comb.	Quota	N	V par	M	σ0	σN	l'	fvd	Vt scorr.	Vt fess.diag.	Vt,lim	c.s.	Verifica
SLV 8	0.67	-21428	7132	985.65		54664	1.4	16250	6370			0.89	No, Vu<V
SLV 8	4.35	-16589	5578	-285.03		42318	1.4	16250	6370			1.14	Si
SLV 7	0.67	-21428	7132	985.65		54664	1.4	16250	6370			0.89	No, Vu<V
SLV 7	4.35	-16589	5578	-285.03		42318	1.4	16250	6370			1.14	Si
SLV 10	0.67	-12197	-7364	-1043.43		31114	1.4	14556	5706			0.77	No, Vu<V
SLV 10	4.35	-12109	-5058	-217.19		30891	1.4	14512	5689			1.12	Si
SLV 14	0.67	-22170	-5463	161.18		56555	1.4	16250	6370			1.17	Si
SLV 14	4.35	-16887	-2999	-493.76		43079	1.4	16250	6370			2.12	Si
SLV 13	0.67	-22170	-5463	161.18		56555	1.4	16250	6370			1.17	Si
SLV 13	4.35	-16887	-2999	-493.76		43079	1.4	16250	6370			2.12	Si
SLV 9	0.67	-12197	-7364	-1043.43		31114	1.4	14556	5706			0.77	No, Vu<V
SLV 9	4.35	-12109	-5058	-217.19		30891	1.4	14512	5689			1.12	Si
SLV 3	0.67	-11455	5231	-218.96		29222	1.4	14178	5558			1.06	Si
SLV 3	4.35	-11811	3519	-8.47		30130	1.4	14359	5629			1.6	Si
SLV 4	0.67	-11455	5231	-218.96		29222	1.4	14178	5558			1.06	Si
SLV 4	4.35	-11811	3519	-8.47		30130	1.4	14359	5629			1.6	Si
SLV 6	0.67	-7751	-5273	-1369.43		19774	1.4	12288	4817			0.91	No, Vu<V
SLV 6	4.35	-9993	-3961	-50.5		25492	1.4	13432	5265			1.33	Si
SLV 5	0.67	-7751	-5273	-1369.43		19774	1.4	12288	4817			0.91	No, Vu<V
SLV 5	4.35	-9993	-3961	-50.5		25492	1.4	13432	5265			1.33	Si

Verifica a pressoflessione fuori piano D.M. 17-01-18 (N.T.C.)

quota 2.51 Wa 0.05 denominatore 8 γM = 2

Comb.	fd	Sa	σ0	N	M	Mc	Coeff.s.	Verifica
SLV 5	143750	0.3	28673	-11240	124.33	1204.31	9.69	Si
SLV 6	143750	0.3	28673	-11240	124.33	1204.31	9.69	Si
SLV 1	143750	0.3	30637	-12010	124.33	1259.79	10.13	Si
SLV 2	143750	0.3	30637	-12010	124.33	1259.79	10.13	Si
SLV 9	143750	0.3	32111	-12587	124.33	1299.12	10.45	Si
SLV 10	143750	0.3	32111	-12587	124.33	1299.12	10.45	Si
SLV 4	143750	0.3	35759	-14018	124.33	1388.13	11.16	Si
SLV 3	143750	0.3	35759	-14018	124.33	1388.13	11.16	Si
SLV 14	143750	0.3	42097	-16502	124.33	1514.33	12.18	Si
SLV 13	143750	0.3	42097	-16502	124.33	1514.33	12.18	Si

Verifica dei meccanismi locali di collasso con analisi cinematica lineare

forza di aggancio al piano = 0 quota mezzeria = 2.51 Wa = 0.05 Ta = 0.0808

Comb.	N top	N base	V orto	α0	M*	e*	a0*	aLim	Verifica
SLV 1	-9832	-7352	239	0.021	1204.9	0.951	0.3216	10.39734	No
SLV 2	-9832	-7352	239	0.021	1204.9	0.951	0.3216	10.39734	No
SLV 3	-11811	-11455	171	0.029	1405.9	0.957	0.43708	10.39734	No
SLV 4	-11811	-11455	171	0.029	1405.9	0.957	0.43708	10.39734	No
SLV 15	-18866	-26273	-210	0.03	2123.8	0.971	0.45051	10.39734	No
SLV 16	-18866	-26273	-210	0.03	2123.8	0.971	0.45051	10.39734	No
SLV 6	-9993	-7751	185	0.026	1221.2	0.952	0.39805	9.1791	No
SLV 5	-9993	-7751	185	0.026	1221.2	0.952	0.39805	9.1791	No
SLV 13	-16887	-22170	-142	0.033	1922.4	0.968	0.49491	10.39734	No
SLV 14	-16887	-22170	-142	0.033	1922.4	0.968	0.49491	10.39734	No

Tabella dei coefficienti di sicurezza minimi

Stato limite	Coeff.s.	Comb.	Verifica
PF_SLU	11.049	SLU 84	Si
V_SLU	9.714	SLU 57	Si
PF_SLV	3.321	SLV 5	Si
V_SLV	0.775	SLV 9	No
PFFP_SLV	9.686	SLV 5	Si
R_SLV	0.031	SLV 1	No

Maschio 77

Verifiche condotte secondo D.M. 17-01-18 (N.T.C.)

Dati geometrici

X ini.	Y ini.	X fin.	Y fin.	Quota i.	Quota.s	l	Sp.	h netta	h ini.	h fin.	a	a.s.,sx	a.s.,dx
-19.463	1.046	-24.643	1.046	L3	L4	5.18	0.28	3.68	3.68	3.68			

Caratteristiche del materiale

(Circolare 7 21-01-19 C8.5.I) Muratura in mattoni pieni e malta di calce LC2_Corti

fb	fk	fvk0	fmedio	τ0	fv0	μ	ϕ	fv,lim	E	G	FC
600000			345000	9000	20000	0.58	0.77	32500	320000000	128000000	1.2

Verifica a pressoflessione nel piano secondo D.M. 17-01-18 NTC §7.8.2.2.1 in combinazioni non sismiche, γM = 3

Comb.	Quota	N	M	σ0	Mu	c.s.	Verifica
SLU 82	0.67	-91565	-15858.67	63129	53363.77	3.365	Si
SLU 82	2.77	-87994	-12193.46	60667	58171.89	4.771	Si
SLU 78	0.67	-91708	-15488.72	63228	53160.21	3.432	Si
SLU 78	2.77	-87741	-12074.43	60493	58490.68	4.844	Si
SLU 81	0.67	-92106	-16007.95	63502	52587.46	3.285	Si
SLU 81	2.77	-88558	-12621.6	61056	57450.07	4.552	Si
SLU 74	0.67	-90717	-15336.1	62544	54557.1	3.557	Si
SLU 74	2.77	-86781	-12177.92	59831	59677.38	4.9	Si
SLU 80	0.67	-90931	-15371.48	62692	54259.18	3.53	Si
SLU 80	2.77	-86899	-11898.97	59912	59533.27	5.003	Si
SLU 75	0.67	-90176	-15186.82	62172	55300.48	3.641	Si
SLU 75	2.77	-86217	-11749.77	59442	60355.29	5.137	Si
SLU 79	0.67	-91471	-15520.76	63064	53497.92	3.447	Si
SLU 79	2.77	-87463	-12327.12	60301	58838.5	4.773	Si
SLU 83	0.67	-93638	-16309.85	64558	50317.58	3.085	Si
SLU 83	2.77	-90082	-12946.25	62106	55429.07	4.281	Si
SLU 77	0.67	-92248	-15638	63600	52380.53	3.35	Si
SLU 77	2.77	-88305	-12502.57	60881	57775.1	4.621	Si
SLU 84	0.67	-93097	-16160.57	64185	51130.18	3.164	Si
SLU 84	2.77	-89518	-12518.11	61718	56188.56	4.489	Si

Verifica a pressoflessione nel piano secondo D.M. 17-01-18 NTC §7.8.2.2.1 in combinazioni sismiche, γM = 2

Comb.	Quota	N	M	σ0	Mu	c.s.	Verifica
SLV 6	0.67	-65152	-10422.42	44919	106713.12	10.239	Si
SLV 6	2.77	-61688	-6898.38	42530	104161.78	15.099	Si
SLV 4	0.67	-65985	10037.58	45493	107274.07	10.687	Si
SLV 4	2.77	-74172	-7147.62	51137	111709.15	15.629	Si
SLV 10	0.67	-62382	-21179.46	43009	104701.17	4.944	Si
SLV 10	2.77	-52320	-7157.91	36072	95507.47	13.343	Si
SLV 15	0.67	-56750	-25819.23	39126	99919.92	3.87	Si
SLV 15	2.77	-42948	-8012.72	29610	84281.4	10.518	Si
SLV 16	0.67	-56750	-25819.23	39126	99919.92	3.87	Si
SLV 16	2.77	-42948	-8012.72	29610	84281.4	10.518	Si
SLV 3	0.67	-65985	10037.58	45493	107274.07	10.687	Si
SLV 3	2.77	-74172	-7147.62	51137	111709.15	15.629	Si
SLV 14	0.67	-57858	-29470.05	39890	100933.34	3.425	Si
SLV 14	2.77	-42230	-7757.94	29115	83315.38	10.739	Si
SLV 13	0.67	-57858	-29470.05	39890	100933.34	3.425	Si
SLV 13	2.77	-42230	-7757.94	29115	83315.38	10.739	Si
SLV 5	0.67	-65152	-10422.42	44919	106713.12	10.239	Si
SLV 5	2.77	-61688	-6898.38	42530	104161.78	15.099	Si
SLV 9	0.67	-62382	-21179.46	43009	104701.17	4.944	Si
SLV 9	2.77	-52320	-7157.91	36072	95507.47	13.343	Si

Verifica a taglio nel piano secondo D.M. 17-01-18 (N.T.C.) §7.8.2.2.2 con rottura per scorrimento in combinazioni non sismiche, γM = 3

Comb.	Quota	N	V par	M	σ0	σN	l'	fvd	Vt scorr.	Vt fess.diag.	Vt,lim	c.s.	Verifica
SLU 83	0.67	-93638	8836	-16309.85		64558	5.1801	10833	15713			1.78	Si
SLU 83	2.77	-90082	9236	-12946.25		62106	5.1801	10833	15713			1.7	Si
SLU 41	0.67	-79529	8066	-14641.77		54831	5.1801	10833	15713			1.95	Si
SLU 41	2.77	-77467	8405	-11806.62		53409	5.1801	10833	15713			1.87	Si
SLU 74	0.67	-90717	8311	-15336.1		62544	5.1801	10833	15713			1.89	Si
SLU 74	2.77	-86781	8699	-12177.92		59831	5.1801	10833	15713			1.81	Si
SLU 82	0.67	-91565	8490	-15858.67		63129	5.1801	10833	15713			1.85	Si
SLU 82	2.77	-87994	8893	-12193.46		60667	5.1801	10833	15713			1.77	Si
SLU 84	0.67	-93097	8591	-16160.57		64185	5.1801	10833	15713			1.83	Si
SLU 84	2.77	-89518	9000	-12518.11		61718	5.1801	10833	15713			1.75	Si
SLU 75	0.67	-90176	8066	-15186.82		62172	5.1801	10833	15713			1.95	Si
SLU 75	2.77	-86217	8463	-11749.77		59442	5.1801	10833	15713			1.86	Si
SLU 77	0.67	-92248	8412	-15638		63600	5.1801	10833	15713			1.87	Si
SLU 77	2.77	-88305	8806	-12502.57		60881	5.1801	10833	15713			1.78	Si
SLU 81	0.67	-92106	8734	-16007.95		63502	5.1801	10833	15713			1.8	Si
SLU 81	2.77	-88558	9129	-12621.6		61056	5.1801	10833	15713			1.72	Si
SLU 78	0.67	-91708	8168	-15488.72		63228	5.1801	10833	15713			1.92	Si
SLU 78	2.77	-87741	8570	-12074.43		60493	5.1801	10833	15713			1.83	Si
SLU 79	0.67	-91471	8247	-15520.76		63064	5.1801	10833	15713			1.91	Si
SLU 79	2.77	-87463	8638	-12327.12		60301	5.1801	10833	15713			1.82	Si

Verifica a taglio nel piano secondo D.M. 17-01-18 (N.T.C.) §7.8.2.2.2 con rottura per scorrimento in combinazioni sismiche, γM = 2

Comb.	Quota	N	V par	M	σ0	σN	l'	fvd	Vt scorr.	Vt fess.diag.	Vt,lim	c.s.	Verifica
SLV 15	0.67	-56750	-18732	-25819.23		39126	5.1801	16159	23437			1.25	Si
SLV 15	2.77	-42948	-16576	-8012.72		29610	5.1801	14255	20677			1.25	Si
SLV 4	0.67	-65985	30881	10037.58		45493	5.1801	16250	23570			0.76	No, Vu<V
SLV 4	2.77	-74172	29076	-7147.62		51137	5.1801	16250	23570			0.81	No, Vu<V
SLV 14	0.67	-57858	-20697	-29470.05		39890	5.1801	16250	23570			1.14	Si
SLV 14	2.77	-42230	-18359	-7757.94		29115	5.1801	14156	20533			1.12	Si
SLV 8	0.67	-61461	15809	1746.99		42374	5.1801	16250	23570			1.49	Si
SLV 8	2.77	-64081	15178	-7747.65		44180	5.1801	16250	23570			1.55	Si
SLV 3	0.67	-65985	30881	10037.58		45493	5.1801	16250	23570			0.76	No, Vu<V
SLV 3	2.77	-74172	29076	-7147.62		51137	5.1801	16250	23570			0.81	No, Vu<V
SLV 16	0.67	-56750	-18732	-25819.23		39126	5.1801	16159	23437			1.25	Si
SLV 16	2.77	-42948	-16576	-8012.72		29610	5.1801	14255	20677			1.25	Si
SLV 1	0.67	-67092	28916	6386.76		46257	5.1801	16250	23570			0.82	No, Vu<V
SLV 1	2.77	-73454	27293	-6892.84		50642	5.1801	16250	23570			0.86	No, Vu<V
SLV 2	0.67	-67092	28916	6386.76		46257	5.1801	16250	23570			0.82	No, Vu<V
SLV 2	2.77	-73454	27293	-6892.84		50642	5.1801	16250	23570			0.86	No, Vu<V
SLV 13	0.67	-57858	-20697	-29470.05		39890	5.1801	16250	23570			1.14	Si
SLV 13	2.77	-42230	-18359	-7757.94		29115	5.1801	14156	20533			1.12	Si
SLV 7	0.67	-61461	15809	1746.99		42374	5.1801	16250	23570			1.49	Si
SLV 7	2.77	-64081	15178	-7747.65		44180	5.1801	16250	23570			1.55	Si

Verifica a pressoflessione fuori piano D.M. 17-01-18 (N.T.C.)

quota 2.51 Wa 0.05 denominatore 8 γM = 2

Comb.	fd	Sa	σ0	N	M	Mc	Coeff.s.	Verifica
SLV 14	143750	0.3	30086	-43638	460.03	4605.06	10.01	Si
SLV 13	143750	0.3	30086	-43638	460.03	4605.06	10.01	Si
SLV 16	143750	0.3	30789	-44658	460.03	4676.69	10.17	Si
SLV 15	143750	0.3	30789	-44658	460.03	4676.69	10.17	Si
SLV 10	143750	0.3	36164	-52454	460.03	5170.05	11.24	Si
SLV 9	143750	0.3	36164	-52454	460.03	5170.05	11.24	Si
SLV 11	143750	0.3	38507	-55853	460.03	5355.1	11.64	Si
SLV 12	143750	0.3	38507	-55853	460.03	5355.1	11.64	Si
SLV 6	143750	0.3	42076	-61029	460.03	5601.86	12.18	Si
SLV 5	143750	0.3	42076	-61029	460.03	5601.86	12.18	Si

Verifica dei meccanismi locali di collasso con analisi cinematica lineare

forza di aggancio al piano = 0 quota mezzeria = 2.51 Wa = 0.05 Ta = 0.0808

Comb.	N top	N base	V orto	α0	M*	e*	a0*	aLim	Verifica
SLV 12	-52128	-58691	-546	0.032	6059.1	0.963	0.47802	9.1791	No
SLV 11	-52128	-58691	-546	0.032	6059.1	0.963	0.47802	9.1791	No
SLV 9	-47273	-62382	517	0.032	5565.3	0.96	0.47884	9.1791	No
SLV 10	-47273	-62382	517	0.032	5565.3	0.96	0.47884	9.1791	No
SLV 6	-53192	-65152	545	0.032	6167.3	0.963	0.47965	9.1791	No
SLV 5	-53192	-65152	545	0.032	6167.3	0.963	0.47965	9.1791	No
SLV 8	-58046	-61461	-518	0.033	6661.3	0.966	0.49222	9.1791	No
SLV 7	-58046	-61461	-518	0.033	6661.3	0.966	0.49222	9.1791	No
SLV 2	-61795	-67092	206	0.038	7042.9	0.968	0.56621	10.39734	No
SLV 1	-61795	-67092	206	0.038	7042.9	0.968	0.56621	10.39734	No

Tabella dei coefficienti di sicurezza minimi

Stato limite	Coeff.s.	Comb.	Verifica
PF_SLU	3.085	SLU 83	Si
V_SLU	1.701	SLU 83	Si
PF_SLV	3.425	SLV 13	Si
V_SLV	0.763	SLV 3	No
PFFP_SLV	10.01	SLV 13	Si
R_SLV	0.052	SLV 11	No

Maschio 78

Verifiche condotte secondo D.M. 17-01-18 (N.T.C.)

Dati geometrici

X ini.	Y ini.	X fin.	Y fin.	Quota i.	Quota.s	l	Sp.	h netta	h ini.	h fin.	a	a.s.,sx	a.s.,dx
-13.543	1.046	-18.663	1.046	L3	L4	5.12	0.28	3.68	3.68	3.68			

Caratteristiche del materiale

(Circolare 7 21-01-19 C8.5.I) Muratura in mattoni pieni e malta di calce LC2_Corti

fb	fk	fvk0	fmedio	τ0	fv0	μ	ϕ	fv,lim	E	G	FC
600000			345000	9000	20000	0.58	0.77	32500	320000000	128000000	1.2

Verifica a pressoflessione nel piano secondo D.M. 17-01-18 NTC §7.8.2.2.1 in combinazioni non sismiche, γM = 3

Comb.	Quota	N	M	σ0	Mu	c.s.	Verifica
SLU 78	0.67	-98349	4253.12	68605	39724.54	9.34	Si
SLU 78	2.77	-95372	9414.27	66529	44745.62	4.753	Si
SLU 74	0.67	-97565	4971.66	68059	41084.62	8.264	Si
SLU 74	2.77	-93943	9100.05	65532	47018.53	5.167	Si
SLU 77	0.67	-99564	4941.24	69453	37563.14	7.602	Si
SLU 77	2.77	-95984	9198.45	66956	43745.48	4.756	Si
SLU 81	0.67	-99206	5175.17	69203	38206.92	7.383	Si
SLU 81	2.77	-95833	9457.51	66850	43994.48	4.652	Si
SLU 83	0.67	-101205	5144.75	70598	34541.62	6.714	Si
SLU 83	2.77	-97874	9555.92	68274	40552.33	4.244	Si
SLU 80	0.67	-97402	4170.37	67945	41363.12	9.918	Si
SLU 80	2.77	-94421	9396.35	65866	46267.49	4.924	Si
SLU 82	0.67	-97991	4487.05	68356	40349.24	8.992	Si
SLU 82	2.77	-95221	9673.33	66423	44990.56	4.651	Si
SLU 84	0.67	-99990	4456.63	69750	36790.44	8.255	Si
SLU 84	2.77	-97262	9771.74	67847	41603.15	4.257	Si
SLU 79	0.67	-98618	4858.49	68793	39252.14	8.079	Si
SLU 79	2.77	-95033	9180.53	66292	45292.85	4.934	Si
SLU 75	0.67	-96350	4283.54	67211	43139.51	10.071	Si
SLU 75	2.77	-93331	9315.87	65105	47963.94	5.149	Si

Verifica a pressoflessione nel piano secondo D.M. 17-01-18 NTC §7.8.2.2.1 in combinazioni sismiche, γM = 2

Comb.	Quota	N	M	σ0	Mu	c.s.	Verifica
SLV 14	0.67	-64577	-20423.11	45047	104365.01	5.11	Si
SLV 14	2.77	-69667	18963.88	48598	107409.01	5.664	Si
SLV 4	0.67	-66048	27113.2	46073	105322.51	3.885	Si
SLV 4	2.77	-54465	-6736.97	37993	96072.01	14.26	Si
SLV 9	0.67	-41892	-5377.33	29223	81591.54	15.173	Si
SLV 9	2.77	-50816	19690.11	35448	92344.88	4.69	Si
SLV 16	0.67	-79873	-19373.49	55717	111230.57	5.741	Si
SLV 16	2.77	-78588	12554.08	54821	110917.03	8.835	Si
SLV 10	0.67	-41892	-5377.33	29223	81591.54	15.173	Si
SLV 10	2.77	-50816	19690.11	35448	92344.88	4.69	Si
SLV 13	0.67	-64577	-20423.11	45047	104365.01	5.11	Si
SLV 13	2.77	-69667	18963.88	48598	107409.01	5.664	Si

Comb.	Quota	N	M	σ0	Mu	c.s.	Verifica
SLV 15	0.67	-79873	-19373.49	55717	111230.57	5.741	Si
SLV 15	2.77	-78588	12554.08	54821	110917.03	8.835	Si
SLV 2	0.67	-50751	26063.57	35403	92275.61	3.54	Si
SLV 2	2.77	-45544	-327.17	31770	86273.57	263.696	Si
SLV 1	0.67	-50751	26063.57	35403	92275.61	3.54	Si
SLV 1	2.77	-45544	-327.17	31770	86273.57	263.696	Si
SLV 3	0.67	-66048	27113.2	46073	105322.51	3.885	Si
SLV 3	2.77	-54465	-6736.97	37993	96072.01	14.26	Si

Verifica a taglio nel piano secondo D.M. 17-01-18 (N.T.C.) §7.8.2.2.2 con rottura per scorrimento in combinazioni non sismiche, γM = 3

Comb.	Quota	N	V par	M	σ0	σN	l'	fvd	Vt scorr.	Vt fess.diag.	Vt,lim	c.s.	Verifica
SLU 52	0.67	-82141	1585	3088.05		57299	5.1198	10833	15530			9.8	Si
SLU 52	2.77	-79061	1747	8148.73		55151	5.1198	10833	15530			8.89	Si
SLU 68	0.67	-83891	1468	3145.09		58520	5.1198	10833	15530			10.58	Si
SLU 68	2.77	-80583	1632	8336.32		56212	5.1198	10833	15530			9.52	Si
SLU 84	0.67	-99990	1463	4456.63		69750	5.1198	10833	15530			10.62	Si
SLU 84	2.77	-97262	1659	9771.74		67847	5.1198	10833	15530			9.36	Si
SLU 76	0.67	-94593	1596	3742.05		65986	5.1198	10833	15530			9.73	Si
SLU 76	2.77	-91973	1782	9441.83		64158	5.1198	10833	15530			8.72	Si
SLU 78	0.67	-98349	1466	4253.12		68605	5.1198	10833	15530			10.59	Si
SLU 78	2.77	-95372	1658	9414.27		66529	5.1198	10833	15530			9.36	Si
SLU 75	0.67	-96350	1482	4283.54		67211	5.1198	10833	15530			10.48	Si
SLU 75	2.77	-93331	1670	9315.87		65105	5.1198	10833	15530			9.3	Si
SLU 55	0.67	-84140	1569	3057.63		58694	5.1198	10833	15530			9.9	Si
SLU 55	2.77	-81102	1735	8247.14		56575	5.1198	10833	15530			8.95	Si
SLU 65	0.67	-81892	1484	3175.52		57126	5.1198	10833	15530			10.47	Si
SLU 65	2.77	-78542	1644	8237.91		54788	5.1198	10833	15530			9.45	Si
SLU 82	0.67	-97991	1479	4487.05		68356	5.1198	10833	15530			10.5	Si
SLU 82	2.77	-95221	1671	9673.33		66423	5.1198	10833	15530			9.29	Si
SLU 73	0.67	-92594	1612	3772.47		64591	5.1198	10833	15530			9.63	Si
SLU 73	2.77	-89932	1794	9343.42		62734	5.1198	10833	15530			8.66	Si

Verifica a taglio nel piano secondo D.M. 17-01-18 (N.T.C.) §7.8.2.2.2 con rottura per scorrimento in combinazioni sismiche, γM = 2

Comb.	Quota	N	V par	M	σ0	σN	l'	fvd	Vt scorr.	Vt fess.diag.	Vt,lim	c.s.	Verifica
SLV 3	0.67	-66048	28159	27113.2		46073	5.1198	16250	23295			0.83	No, Vu<V
SLV 3	2.77	-54465	26808	-6736.97		37993	5.1198	15932	22839			0.85	No, Vu<V
SLV 10	0.67	-41892	-12580	-5377.33		29223	5.1198	14178	20325			1.62	Si
SLV 10	2.77	-50816	-12122	19690.11		35448	5.1198	15423	22109			1.82	Si
SLV 2	0.67	-50751	24741	26063.57		35403	5.1198	15414	22096			0.89	No, Vu<V
SLV 2	2.77	-45544	23315	-327.17		31770	5.1198	14687	21055			0.9	No, Vu<V
SLV 15	0.67	-79873	-23121	-19373.49		55717	5.1198	16250	23295			1.01	Si
SLV 15	2.77	-78588	-21440	12554.08		54821	5.1198	16250	23295			1.09	Si
SLV 14	0.67	-64577	-26540	-20423.11		45047	5.1198	16250	23295			0.88	No, Vu<V
SLV 14	2.77	-69667	-24934	18963.88		48598	5.1198	16250	23295			0.93	No, Vu<V
SLV 16	0.67	-79873	-23121	-19373.49		55717	5.1198	16250	23295			1.01	Si
SLV 16	2.77	-78588	-21440	12554.08		54821	5.1198	16250	23295			1.09	Si
SLV 1	0.67	-50751	24741	26063.57		35403	5.1198	15414	22096			0.89	No, Vu<V
SLV 1	2.77	-45544	23315	-327.17		31770	5.1198	14687	21055			0.9	No, Vu<V
SLV 9	0.67	-41892	-12580	-5377.33		29223	5.1198	14178	20325			1.62	Si
SLV 9	2.77	-50816	-12122	19690.11		35448	5.1198	15423	22109			1.82	Si
SLV 13	0.67	-64577	-26540	-20423.11		45047	5.1198	16250	23295			0.88	No, Vu<V
SLV 13	2.77	-69667	-24934	18963.88		48598	5.1198	16250	23295			0.93	No, Vu<V
SLV 4	0.67	-66048	28159	27113.2		46073	5.1198	16250	23295			0.83	No, Vu<V
SLV 4	2.77	-54465	26808	-6736.97		37993	5.1198	15932	22839			0.85	No, Vu<V

Verifica a pressoflessione fuori piano D.M. 17-01-18 (N.T.C.)

quota 2.51 Wa 0.05 denominatore 8 γM = 2

Comb.	fd	Sa	σ0	N	M	Mc	Coeff.s.	Verifica
SLV 6	143750	0.3	31635	-45350	454.67	4705.21	10.35	Si
SLV 5	143750	0.3	31635	-45350	454.67	4705.21	10.35	Si
SLV 2	143750	0.3	34869	-49986	454.67	5000.98	11	Si
SLV 1	143750	0.3	34869	-49986	454.67	5000.98	11	Si
SLV 10	143750	0.3	35123	-50350	454.67	5022.78	11.05	Si
SLV 9	143750	0.3	35123	-50350	454.67	5022.78	11.05	Si
SLV 3	143750	0.3	41129	-58960	454.67	5475.91	12.04	Si
SLV 4	143750	0.3	41129	-58960	454.67	5475.91	12.04	Si
SLV 13	143750	0.3	46495	-66653	454.67	5780.6	12.71	Si
SLV 14	143750	0.3	46495	-66653	454.67	5780.6	12.71	Si

Verifica dei meccanismi locali di collasso con analisi cinematica lineare

forza di aggancio al piano = 0 quota mezzeria = 2.51 Wa = 0.05 Ta = 0.0808

Comb.	N top	N base	V orto	α0	M*	e*	a0*	aLim	Verifica
SLV 9	-44270	-41892	451	0.033	5251	0.958	0.49327	9.1791	No
SLV 10	-44270	-41892	451	0.033	5251	0.958	0.49327	9.1791	No
SLV 13	-55949	-64577	208	0.038	6439.1	0.965	0.56598	10.39734	No
SLV 14	-55949	-64577	208	0.038	6439.1	0.965	0.56598	10.39734	No
SLV 3	-50795	-66048	-203	0.038	5914.6	0.962	0.56845	10.39734	No
SLV 4	-50795	-66048	-203	0.038	5914.6	0.962	0.56845	10.39734	No
SLV 6	-40770	-37744	405	0.033	4895.2	0.955	0.50385	9.1791	No
SLV 5	-40770	-37744	405	0.033	4895.2	0.955	0.50385	9.1791	No
SLV 7	-62474	-88732	-446	0.034	7103.3	0.968	0.51176	9.1791	No
SLV 8	-62474	-88732	-446	0.034	7103.3	0.968	0.51176	9.1791	No

Tabella dei coefficienti di sicurezza minimi

Stato limite	Coeff.s.	Comb.	Verifica
PF_SLU	4.244	SLU 83	Si
V_SLU	8.657	SLU 73	Si
PF_SLV	3.54	SLV 1	Si
V_SLV	0.827	SLV 3	No

Stato limite	Coeff.s.	Comb.	Verifica
PFFP_SLV	10.349	SLV 5	Si
R_SLV	0.054	SLV 9	No

Maschio 79

Verifiche condotte secondo D.M. 17-01-18 (N.T.C.)

Dati geometrici

X ini.	Y ini.	X fin.	Y fin.	Quota i.	Quota.s	l	Sp.	h netta	h ini.	h fin.	a	a.s.,sx	a.s.,dx
-12.283	1.046	-12.543	1.046	L3	L4	0.261	0.28	3.68	3.68	3.68			

Caratteristiche del materiale

(Circolare 7 21-01-19 C8.5.I) Muratura in mattoni pieni e malta di calce LC2_Corti

fb	fk	fvk0	fmedio	τ0	fv0	μ	ϕ	fv,lim	E	G	FC
600000			345000	9000	20000	0.58	0.77	32500	320000000	128000000	1.2

Verifica a pressoflessione nel piano secondo D.M. 17-01-18 NTC §7.8.2.2.1 in combinazioni non sismiche, γM = 3

Comb.	Quota	N	M	σ0	Mu	c.s.	Verifica
SLU 59	0.67	-6795	-152.05	93156	0	0	No, Rottura per schiacciamento
SLU 59	3.17	-3754	-162.85	51462	180.07	1.106	Si
SLU 57	0.67	-6870	-152.79	94171	0	0	No, Rottura per schiacciamento
SLU 57	3.17	-3800	-165.27	52088	178.46	1.08	Si
SLU 56	0.67	-6916	-153.02	94813	0	0	No, Rottura per schiacciamento
SLU 56	3.17	-3829	-167.34	52496	177.36	1.06	Si
SLU 61	0.67	-6858	-145.89	94014	0	0	No, Rottura per schiacciamento
SLU 61	3.17	-3811	-172.48	52241	178.05	1.032	Si
SLU 58	0.67	-6842	-152.27	93798	0	0	No, Rottura per schiacciamento
SLU 58	3.17	-3784	-164.91	51870	179.03	1.086	Si
SLU 62	0.67	-7055	-152.78	96716	0	0	No, Rottura per schiacciamento
SLU 62	3.17	-3922	-174.88	53764	173.69	0.993	No, M>Mu
SLU 60	0.67	-6905	-146.12	94656	0	0	No, Rottura per schiacciamento
SLU 60	3.17	-3841	-174.55	52649	176.94	1.014	Si
SLU 55	0.67	-6614	-145.24	90668	0	0	No, Rottura per schiacciamento
SLU 55	3.17	-3653	-161.14	50075	183.32	1.138	Si
SLU 63	0.67	-7008	-152.55	96074	0	0	No, Rottura per schiacciamento
SLU 63	3.17	-3892	-172.81	53356	174.91	1.012	Si
SLU 42	0.67	-6701	-146.24	91864	0	0	No, Rottura per schiacciamento
SLU 42	3.17	-3773	-168.75	51728	179.4	1.063	Si

Verifica a pressoflessione nel piano secondo D.M. 17-01-18 NTC §7.8.2.2.1 in combinazioni sismiche, γM = 2

Comb.	Quota	N	M	σ0	Mu	c.s.	Verifica
SLV 13	0.67	-4884	-727.58	0	0	0	No, e>l/2
SLV 13	3.17	-1327	399.78	0	0	0	No, e>l/2
SLV 2	0.67	-3954	526.12	0	0	0	No, e>l/2
SLV 2	3.17	-3424	-613.3	0	0	0	No, e>l/2
SLV 3	0.67	-5236	510.9	71781	281.38	0.551	No, M>Mu
SLV 3	3.17	-4269	-653.85	0	0	0	No, e>l/2
SLV 4	0.67	-5236	510.9	71781	281.38	0.551	No, M>Mu
SLV 4	3.17	-4269	-653.85	0	0	0	No, e>l/2
SLV 16	0.67	-6167	-742.8	84539	247.52	0.333	No, M>Mu
SLV 16	3.17	-2172	359.24	0	0	0	No, e>l/2
SLV 11	0.67	-7337	-321.76	100586	168.98	0.525	No, M>Mu
SLV 11	3.17	-3891	-42.64	53341	285.59	6.697	Si
SLV 1	0.67	-3954	526.12	0	0	0	No, e>l/2
SLV 1	3.17	-3424	-613.3	0	0	0	No, e>l/2
SLV 15	0.67	-6167	-742.8	84539	247.52	0.333	No, M>Mu
SLV 15	3.17	-2172	359.24	0	0	0	No, e>l/2
SLV 12	0.67	-7337	-321.76	100586	168.98	0.525	No, M>Mu
SLV 12	3.17	-3891	-42.64	53341	285.59	6.697	Si
SLV 14	0.67	-4884	-727.58	0	0	0	No, e>l/2
SLV 14	3.17	-1327	399.78	0	0	0	No, e>l/2

Verifica a taglio nel piano secondo D.M. 17-01-18 (N.T.C.) §7.8.2.2.2 con rottura per scorrimento in combinazioni non sismiche, γM = 3

Comb.	Quota	N	V par	M	σ0	σN	l'	fvd	Vt scorr.	Vt fess.diag.	Vt,lim	c.s.	Verifica
SLU 77	0.67	-7713	-207	-170.35		105737	0.2605	10833	790			3.82	Si
SLU 77	3.17	-4303	153	-189.73		59448	0.2585	10833	784			5.12	Si
SLU 82	0.67	-7655	-200	-163.22		104938	0.2605	10833	790			3.95	Si
SLU 82	3.17	-4285	162	-194.87		60163	0.2543	10833	772			4.75	Si
SLU 78	0.67	-7666	-206	-170.13		105095	0.2605	10833	790			3.83	Si
SLU 78	3.17	-4273	151	-187.66		58916	0.259	10833	786			5.21	Si
SLU 83	0.67	-7852	-208	-170.11		107640	0.2605	10833	790			3.81	Si
SLU 83	3.17	-4396	162	-197.27		61286	0.2562	10833	777			4.79	Si
SLU 84	0.67	-7805	-207	-169.88		106998	0.2605	10833	790			3.82	Si
SLU 84	3.17	-4366	160	-195.2		60752	0.2567	10833	779			4.86	Si
SLU 80	0.67	-7592	-205	-169.38		104080	0.2605	10833	790			3.85	Si
SLU 80	3.17	-4228	150	-185.23		58220	0.2593	10833	787			5.25	Si
SLU 75	0.67	-7516	-199	-163.47		103035	0.2605	10833	790			3.97	Si
SLU 75	3.17	-4192	153	-187.33		58317	0.2567	10833	779			5.08	Si

Comb.	Quota	N	V par	M	σ0	σN	l'	fvd	Vt scorr.	Vt fess.diag.	Vt,lim	c.s.	Verifica
SLU 79	0.67	-7639	-206	-169.61		104722	0.2605	10833	790			3.84	Si
SLU 79	3.17	-4258	152	-187.3		58751	0.2588	10833	785			5.17	Si
SLU 74	0.67	-7563	-200	-163.7		103677	0.2605	10833	790			3.95	Si
SLU 74	3.17	-4222	155	-189.4		58851	0.2562	10833	777			5	Si
SLU 81	0.67	-7702	-201	-163.45		105580	0.2605	10833	790			3.94	Si
SLU 81	3.17	-4314	165	-196.94		60699	0.2538	10833	770			4.68	Si

Verifica a taglio nel piano secondo D.M. 17-01-18 (N.T.C.) §7.8.2.2.2 con rottura per scorrimento in combinazioni sismiche, γM = 2

Comb.	Quota	N	V par	M	σ0	σN	l'	fvd	Vt scorr.	Vt fess.diag.	Vt,lim	c.s.	Verifica
SLV 14	0.67	-4884	-841	-727.58		0	0	8333	0			0	No, Vu<V
SLV 14	3.17	-1327	-339	399.78		0	0	8333	0			0	No, Vu<V
SLV 15	0.67	-6167	-851	-742.8		748081	0.0294	16250	134			0.16	No, Vu<V
SLV 15	3.17	-2172	-345	359.24		0	0	8333	0			0	No, Vu<V
SLV 2	0.67	-3954	586	526.12		0	0	8333	0			0	No, Vu<V
SLV 2	3.17	-3424	559	-613.3		0	0	8333	0			0	No, Vu<V
SLV 1	0.67	-3954	586	526.12		0	0	8333	0			0	No, Vu<V
SLV 1	3.17	-3424	559	-613.3		0	0	8333	0			0	No, Vu<V
SLV 4	0.67	-5236	576	510.9		190673	0.0981	16250	446			0.77	No, Vu<V
SLV 4	3.17	-4269	553	-653.85		0	0	8333	0			0	No, Vu<V
SLV 13	0.67	-4884	-841	-727.58		0	0	8333	0			0	No, Vu<V
SLV 13	3.17	-1327	-339	399.78		0	0	8333	0			0	No, Vu<V
SLV 3	0.67	-5236	576	510.9		190673	0.0981	16250	446			0.77	No, Vu<V
SLV 3	3.17	-4269	553	-653.85		0	0	8333	0			0	No, Vu<V
SLV 16	0.67	-6167	-851	-742.8		748081	0.0294	16250	134			0.16	No, Vu<V
SLV 16	3.17	-2172	-345	359.24		0	0	8333	0			0	No, Vu<V
SLV 5	0.67	-2783	97	105.08		38152	0.2605	15964	1165			11.98	Si
SLV 5	3.17	-1705	251	-211.42		323945	0.0188	16250	86			0.34	No, Vu<V
SLV 6	0.67	-2783	97	105.08		38152	0.2605	15964	1165			11.98	Si
SLV 6	3.17	-1705	251	-211.42		323945	0.0188	16250	86			0.34	No, Vu<V

Verifica a pressoflessione fuori piano D.M. 17-01-18 (N.T.C.)

quota 2.51 Wa 0.05 denominatore 8 γM = 2

Comb.	fd	Sa	σ0	N	M	Mc	Coeff.s.	Verifica
SLV 12	143750	0.3	99647	-7269	23.14	187.73	8.11	Si
SLV 11	143750	0.3	99647	-7269	23.14	187.73	8.11	Si
SLV 7	143750	0.3	96146	-7014	23.14	209.27	9.05	Si
SLV 8	143750	0.3	96146	-7014	23.14	209.27	9.05	Si
SLV 6	143750	0.3	32755	-2389	23.14	244.84	10.58	Si
SLV 5	143750	0.3	32755	-2389	23.14	244.84	10.58	Si
SLV 9	143750	0.3	36256	-2645	23.14	260.4	11.26	Si
SLV 10	143750	0.3	36256	-2645	23.14	260.4	11.26	Si
SLV 16	143750	0.3	81545	-5949	23.14	277	11.97	Si
SLV 15	143750	0.3	81545	-5949	23.14	277	11.97	Si

Verifica dei meccanismi locali di collasso con analisi cinematica lineare

forza di aggancio al piano = 0 quota mezzeria = 2.51 Wa = 0.05 Ta = 0.0808

Comb.	N top	N base	V orto	α0	M*	e*	a0*	aLim	Verifica
SLV 7	-892	-7058	-159	0	129.3	0.923	0	9.1791	No
SLV 6	-501	-2783	143	0	90.4	0.901	0	9.1791	No
SLV 8	-892	-7058	-159	0	129.3	0.923	0	9.1791	No
SLV 3	-577	-5236	-71	0	97.9	0.906	0	10.39734	No
SLV 12	-1044	-7337	-144	0	144.6	0.929	0	9.1791	No
SLV 9	-653	-3062	158	0	105.4	0.91	0	9.1791	No
SLV 4	-577	-5236	-71	0	97.9	0.906	0	10.39734	No
SLV 10	-653	-3062	158	0	105.4	0.91	0	9.1791	No
SLV 5	-501	-2783	143	0	90.4	0.901	0	9.1791	No
SLV 11	-1044	-7337	-144	0	144.6	0.929	0	9.1791	No

Tabella dei coefficienti di sicurezza minimi

Stato limite	Coeff.s.	Comb.	Verifica
PF_SLU	0	SLU 20	No
V_SLU	3.805	SLU 83	Si
PF_SLV	0	SLV 1	No
V_SLV	0	SLV 1	No
PFFP_SLV	8.114	SLV 11	Si
R_SLV	0	SLV 3	No

Maschio 80

Verifiche condotte secondo D.M. 17-01-18 (N.T.C.)

Dati geometrici

X ini.	Y ini.	X fin.	Y fin.	Quota i.	Quota.s	l	Sp.	h netta	h ini.	h fin.	a	a.s.,sx	a.s.,dx
-4.968	1.046	-11.163	1.046	L3	L4	6.195	0.28	3.68	3.68	3.68			

Caratteristiche del materiale

(Circolare 7 21-01-19 C8.5.I) Muratura in mattoni pieni e malta di calce LC2_Corti

fb	fk	fvk0	fmedio	τ0	fv0	μ	ϕ	fv,lim	E	G	FC
600000			345000	9000	20000	0.58	0.77	32500	320000000	128000000	1.2

Verifica a pressoflessione nel piano secondo D.M. 17-01-18 NTC §7.8.2.2.1 in combinazioni non sismiche, γM = 3

Comb.	Quota	N	M	σ0	Mu	c.s.	Verifica
SLU 75	0.67	-114996	15540.18	66295	66304.34	4.267	Si
SLU 75	3.17	-106568	15340.93	61437	81133.61	5.289	Si
SLU 77	0.67	-118404	15230.95	68260	59424.22	3.902	Si
SLU 77	3.17	-109311	16242.72	63018	76649.73	4.719	Si

Comb.	Quota	N	M	σ0	Mu	c.s.	Verifica
SLU 80	0.67	-115857	15428.06	66792	64613.27	4.188	Si
SLU 80	3.17	-107449	15647.33	61945	79729.02	5.095	Si
SLU 79	0.67	-117224	15082.86	67580	61864.24	4.102	Si
SLU 79	3.17	-108148	16023.67	62347	78591.48	4.905	Si
SLU 83	0.67	-120450	16179.38	69440	55048.17	3.402	Si
SLU 83	3.17	-111651	16351.53	64367	72562.52	4.438	Si
SLU 74	0.67	-116362	15194.98	67083	63606.91	4.186	Si
SLU 74	3.17	-107267	15717.27	61839	80023.06	5.091	Si
SLU 78	0.67	-117037	15576.16	67472	62243.93	3.996	Si
SLU 78	3.17	-108612	15866.38	62615	77822.88	4.905	Si
SLU 82	0.67	-117042	16488.61	67475	62234	3.774	Si
SLU 82	3.17	-108909	15449.74	62786	77327.81	5.005	Si
SLU 84	0.67	-119084	16524.59	68652	57990.45	3.509	Si
SLU 84	3.17	-110953	15975.19	63964	73807.33	4.62	Si
SLU 81	0.67	-118408	16143.41	68263	59414	3.68	Si
SLU 81	3.17	-109607	15826.08	63189	76145.59	4.811	Si

Verifica a pressoflessione nel piano secondo D.M. 17-01-18 NTC §7.8.2.2.1 in combinazioni sismiche, γM = 2

Comb.	Quota	N	M	σ0	Mu	c.s.	Verifica
SLV 4	0.67	-96352	67166	55547	162773.18	2.423	Si
SLV 4	3.17	-87104	16442.29	50216	158922.57	9.665	Si
SLV 13	0.67	-60533	-47468.49	34897	133949.1	2.822	Si
SLV 13	3.17	-55079	3950.66	31753	126271.44	31.962	Si
SLV 3	0.67	-96352	67166	55547	162773.18	2.423	Si
SLV 3	3.17	-87104	16442.29	50216	158922.57	9.665	Si
SLV 2	0.67	-81111	53788.95	46761	155092.56	2.883	Si
SLV 2	3.17	-76999	5642.66	44390	151857.2	26.912	Si
SLV 9	0.67	-49954	-27634.95	28799	118263.87	4.28	Si
SLV 9	3.17	-50962	-8056.71	29380	119899.37	14.882	Si
SLV 14	0.67	-60533	-47468.49	34897	133949.1	2.822	Si
SLV 14	3.17	-55079	3950.66	31753	126271.44	31.962	Si
SLV 10	0.67	-49954	-27634.95	28799	118263.87	4.28	Si
SLV 10	3.17	-50962	-8056.71	29380	119899.37	14.882	Si
SLV 1	0.67	-81111	53788.95	46761	155092.56	2.883	Si
SLV 1	3.17	-76999	5642.66	44390	151857.2	26.912	Si
SLV 7	0.67	-106930	47332.46	61645	164112.64	3.467	Si
SLV 7	3.17	-91221	28449.66	52589	160945.49	5.657	Si
SLV 8	0.67	-106930	47332.46	61645	164112.64	3.467	Si
SLV 8	3.17	-91221	28449.66	52589	160945.49	5.657	Si

Verifica a taglio nel piano secondo D.M. 17-01-18 (N.T.C.) §7.8.2.2.2 con rottura per scorrimento in combinazioni non sismiche, γM = 3

Comb.	Quota	N	V par	M	σ0	σN	l'	fvd	Vt scorr.	Vt fess.diag.	Vt,lim	c.s.	Verifica
SLU 79	0.67	-117224	-3926	15082.86		67580	6.195	10833	18791			4.79	Si
SLU 79	3.17	-108148	-3472	16023.67		62347	6.195	10833	18791			5.41	Si
SLU 76	0.67	-112905	-3822	15622.22		65090	6.195	10833	18791			4.92	Si
SLU 76	3.17	-104940	-3476	14870.99		60498	6.195	10833	18791			5.41	Si
SLU 78	0.67	-117037	-4134	15576.16		67472	6.195	10833	18791			4.55	Si
SLU 78	3.17	-108612	-3716	15866.38		62615	6.195	10833	18791			5.06	Si
SLU 57	0.67	-104996	-3843	13663.33		60530	6.195	10833	18791			4.89	Si
SLU 57	3.17	-96348	-3511	14235.92		55545	6.195	10833	18791			5.35	Si
SLU 59	0.67	-103816	-3784	13515.24		59850	6.195	10833	18791			4.97	Si
SLU 59	3.17	-95185	-3463	14016.88		54874	6.195	10833	18791			5.43	Si
SLU 70	0.67	-104746	-3841	12933.65		60387	6.195	10833	18791			4.89	Si
SLU 70	3.17	-95668	-3499	13875.34		55153	6.195	10833	18791			5.37	Si
SLU 84	0.67	-119084	-3848	16524.59		68652	6.195	10833	18791			4.88	Si
SLU 84	3.17	-110953	-3438	15975.19		63964	6.195	10833	18791			5.47	Si
SLU 77	0.67	-118404	-3986	15230.95		68260	6.195	10833	18791			4.71	Si
SLU 77	3.17	-109311	-3519	16242.72		63018	6.195	10833	18791			5.34	Si
SLU 80	0.67	-115857	-4074	15428.06		66792	6.195	10833	18791			4.61	Si
SLU 80	3.17	-107449	-3668	15647.33		61945	6.195	10833	18791			5.12	Si
SLU 75	0.67	-114996	-3783	15540.18		66295	6.195	10833	18791			4.97	Si
SLU 75	3.17	-106568	-3393	15340.93		61437	6.195	10833	18791			5.54	Si

Verifica a taglio nel piano secondo D.M. 17-01-18 (N.T.C.) §7.8.2.2.2 con rottura per scorrimento in combinazioni sismiche, γM = 2

Comb.	Quota	N	V par	M	σ0	σN	l'	fvd	Vt scorr.	Vt fess.diag.	Vt,lim	c.s.	Verifica
SLV 16	0.67	-75773	-36133	-34091.43		43683	6.195	16250	28187			0.78	No, Vu<V
SLV 16	3.17	-65184	-30240	14750.3		37579	6.195	15849	27492			0.91	No, Vu<V
SLV 11	0.67	-100757	-17896	16955.23		58086	6.195	16250	28187			1.58	Si
SLV 11	3.17	-84645	-16113	27942.07		48798	6.195	16250	28187			1.75	Si
SLV 15	0.67	-75773	-36133	-34091.43		43683	6.195	16250	28187			0.78	No, Vu<V
SLV 15	3.17	-65184	-30240	14750.3		37579	6.195	15849	27492			0.91	No, Vu<V
SLV 2	0.67	-81111	31583	53788.95		46761	6.195	16250	28187			0.89	No, Vu<V
SLV 2	3.17	-76999	26191	5642.66		44390	6.195	16250	28187			1.08	Si
SLV 3	0.67	-96352	27981	67166		55547	6.195	16250	28187			1.01	Si
SLV 3	3.17	-87104	22483	16442.29		50216	6.195	16250	28187			1.25	Si
SLV 12	0.67	-100757	-17896	16955.23		58086	6.195	16250	28187			1.58	Si
SLV 12	3.17	-84645	-16113	27942.07		48798	6.195	16250	28187			1.75	Si
SLV 13	0.67	-60533	-32530	-47468.49		34897	6.195	15313	26562			0.82	No, Vu<V
SLV 13	3.17	-55079	-26532	3950.66		31753	6.195	14684	25471			0.96	No, Vu<V
SLV 14	0.67	-60533	-32530	-47468.49		34897	6.195	15313	26562			0.82	No, Vu<V
SLV 14	3.17	-55079	-26532	3950.66		31753	6.195	14684	25471			0.96	No, Vu<V
SLV 4	0.67	-96352	27981	67166		55547	6.195	16250	28187			1.01	Si
SLV 4	3.17	-87104	22483	16442.29		50216	6.195	16250	28187			1.25	Si
SLV 1	0.67	-81111	31583	53788.95		46761	6.195	16250	28187			0.89	No, Vu<V
SLV 1	3.17	-76999	26191	5642.66		44390	6.195	16250	28187			1.08	Si

Verifica a pressoflessione fuori piano D.M. 17-01-18 (N.T.C.)

quota 2.51 Wa 0.05 denominatore 8 γM = 2

Comb.	fd	Sa	σ0	N	M	Mc	Coeff.s.	Verifica
SLV 9	143750	0.3	29199	-50649	550.16	5396.33	9.81	Si

Comb.	fd	Sa	σ0	N	M	Mc	Coeff.s.	Verifica
SLV 10	143750	0.3	29199	-50649	550.16	5396.33	9.81	Si
SLV 13	143750	0.3	32495	-56365	550.16	5792.54	10.53	Si
SLV 14	143750	0.3	32495	-56365	550.16	5792.54	10.53	Si
SLV 6	143750	0.3	33207	-57601	550.16	5872.55	10.67	Si
SLV 5	143750	0.3	33207	-57601	550.16	5872.55	10.67	Si
SLV 16	143750	0.3	39327	-68217	550.16	6476.51	11.77	Si
SLV 15	143750	0.3	39327	-68217	550.16	6476.51	11.77	Si
SLV 2	143750	0.3	45855	-79540	550.16	6956.6	12.64	Si
SLV 1	143750	0.3	45855	-79540	550.16	6956.6	12.64	Si

Verifica dei meccanismi locali di collasso con analisi cinematica lineare

forza di aggancio al piano = 0 quota mezzeria = 2.51 Wa = 0.05 Ta = 0.0808

Comb.	N top	N base	V orto	α0	M*	e*	a0*	aLim	Verifica
SLV 9	-48396	-49954	542	0.032	5828.2	0.955	0.48829	9.1791	No
SLV 10	-48396	-49954	542	0.032	5828.2	0.955	0.48829	9.1791	No
SLV 4	-77491	-96352	-238	0.038	8788.1	0.969	0.56708	10.39734	No
SLV 3	-77491	-96352	-238	0.038	8788.1	0.969	0.56708	10.39734	No
SLV 13	-52561	-60533	245	0.038	6251.6	0.957	0.57053	10.39734	No
SLV 14	-52561	-60533	245	0.038	6251.6	0.957	0.57053	10.39734	No
SLV 6	-53325	-56128	489	0.033	6329.2	0.958	0.5078	9.1791	No
SLV 5	-53325	-56128	489	0.033	6329.2	0.958	0.5078	9.1791	No
SLV 7	-81656	-106930	-535	0.034	9212.1	0.97	0.51566	9.1791	No
SLV 8	-81656	-106930	-535	0.034	9212.1	0.97	0.51566	9.1791	No

Tabella dei coefficienti di sicurezza minimi

Stato limite	Coeff.s.	Comb.	Verifica
PF_SLU	3.402	SLU 83	Si
V_SLU	4.546	SLU 78	Si
PF_SLV	2.423	SLV 3	Si
V_SLV	0.78	SLV 15	No
PFFP_SLV	9.809	SLV 9	Si
R_SLV	0.053	SLV 9	No

Maschio 81

Verifiche condotte secondo D.M. 17-01-18 (N.T.C.)

Dati geometrici

X ini.	Y ini.	X fin.	Y fin.	Quota i.	Quota.s	l	Sp.	h netta	h ini.	h fin.	a	a.s.,sx	a.s.,dx
-0.134	1.046	-4.168	1.046	L3	L4	4.034	0.28	3.68	3.68	3.68			

Caratteristiche del materiale

(Circolare 7 21-01-19 C8.5.I) Muratura in mattoni pieni e malta di calce LC2_Corti

fb	fk	fvk0	fmedio	τ0	fv0	μ	ϕ	fv,lim	E	G	FC
600000			345000	9000	20000	0.58	0.77	32500	320000000	128000000	1.2

Verifica a pressoflessione nel piano secondo D.M. 17-01-18 NTC §7.8.2.2.1 in combinazioni non sismiche, γM = 3

Comb.	Quota	N	M	σ0	Mu	c.s.	Verifica
SLU 84	0.67	-93594	-13503.71	82862	0	0	No, Rottura per schiacciamento
SLU 84	2.77	-81704	16319.47	72335	18456.65	1.131	Si
SLU 81	0.67	-92962	-13242.97	82303	0	0	No, Rottura per schiacciamento
SLU 81	2.77	-81099	16240.49	71799	19395.96	1.194	Si
SLU 80	0.67	-91423	-13527.63	80939	1174.82	0.087	No, M>Mu
SLU 80	2.77	-79451	15692.15	70340	21872.16	1.394	Si
SLU 83	0.67	-94436	-13606.63	83607	0	0	No, Rottura per schiacciamento
SLU 83	2.77	-82510	16582.78	73049	17181.35	1.036	Si
SLU 78	0.67	-92200	-13635.15	81627	0	0	No, Rottura per schiacciamento
SLU 78	2.77	-80191	15877.2	70996	20774.34	1.308	Si
SLU 74	0.67	-91568	-13374.4	81068	884.49	0.066	No, M>Mu
SLU 74	2.77	-79586	15798.21	70460	21673.5	1.372	Si
SLU 82	0.67	-92121	-13140.05	81557	0	0	No, Rottura per schiacciamento
SLU 82	2.77	-80293	15977.18	71086	20621.42	1.291	Si
SLU 79	0.67	-92264	-13630.55	81685	0	0	No, Rottura per schiacciamento
SLU 79	2.77	-80257	15955.46	71054	20676.45	1.296	Si
SLU 77	0.67	-93041	-13738.06	82373	0	0	No, Rottura per schiacciamento
SLU 77	2.77	-80997	16140.5	71709	19552.47	1.211	Si
SLU 75	0.67	-90727	-13271.48	80323	2550.34	0.192	No, M>Mu
SLU 75	2.77	-78780	15534.9	69747	22845.53	1.471	Si

Verifica a pressoflessione nel piano secondo D.M. 17-01-18 NTC §7.8.2.2.1 in combinazioni sismiche, γM = 2

Comb.	Quota	N	M	σ0	Mu	c.s.	Verifica
SLV 15	0.67	-79667	-33677.72	70531	67932.41	2.017	Si
SLV 15	2.77	-77975	15986.11	69034	68417.61	4.28	Si
SLV 16	0.67	-79667	-33677.72	70531	67932.41	2.017	Si
SLV 16	2.77	-77975	15986.11	69034	68417.61	4.28	Si
SLV 13	0.67	-80864	-37307.19	71591	67538.47	1.81	Si
SLV 13	2.77	-76149	14381.1	67417	68847.67	4.787	Si
SLV 4	0.67	-44595	18604.75	39481	60883.84	3.272	Si
SLV 4	2.77	-31065	5970.76	27503	48554.78	8.132	Si
SLV 1	0.67	-45792	14975.27	40541	61717.07	4.121	Si

Comb.	Quota	N	M	σ0	Mu	c.s.	Verifica
SLV 1	2.77	-29239	4365.75	25886	46480.39	10.647	Si
SLV 3	0.67	-44595	18604.75	39481	60883.84	3.272	Si
SLV 3	2.77	-31065	5970.76	27503	48554.78	8.132	Si
SLV 9	0.67	-69985	-23242.72	61960	69579.14	2.994	Si
SLV 9	2.77	-57599	9003.21	50994	67691.35	7.519	Si
SLV 14	0.67	-80864	-37307.19	71591	67538.47	1.81	Si
SLV 14	2.77	-76149	14381.1	67417	68847.67	4.787	Si
SLV 2	0.67	-45792	14975.27	40541	61717.07	4.121	Si
SLV 2	2.77	-29239	4365.75	25886	46480.39	10.647	Si
SLV 10	0.67	-69985	-23242.72	61960	69579.14	2.994	Si
SLV 10	2.77	-57599	9003.21	50994	67691.35	7.519	Si

Verifica a taglio nel piano secondo D.M. 17-01-18 (N.T.C.) §7.8.2.2.2 con rottura per scorrimento in combinazioni non sismiche, γM = 3

Comb.	Quota	N	V par	M	σ0	σN	I'	fvd	Vt scorr.	Vt fess.diag.	Vt,lim	c.s.	Verifica
SLU 82	0.67	-92121	-8347	-13140.05		81557	4.034	10833	12236			1.47	Si
SLU 82	2.77	-80293	-8066	15977.18		71086	4.034	10833	12236			1.52	Si
SLU 79	0.67	-92264	-8414	-13630.55		81685	4.034	10833	12236			1.45	Si
SLU 79	2.77	-80257	-8102	15955.46		71054	4.034	10833	12236			1.51	Si
SLU 80	0.67	-91423	-8256	-13527.63		80939	4.034	10833	12236			1.48	Si
SLU 80	2.77	-79451	-7977	15692.15		70340	4.034	10833	12236			1.53	Si
SLU 75	0.67	-90727	-8082	-13271.48		80323	4.034	10833	12236			1.51	Si
SLU 75	2.77	-78780	-7806	15534.9		69747	4.034	10833	12236			1.57	Si
SLU 78	0.67	-92200	-8362	-13635.15		81627	4.034	10833	12236			1.46	Si
SLU 78	2.77	-80191	-8080	15877.2		70996	4.034	10833	12236			1.51	Si
SLU 77	0.67	-93041	-8520	-13738.06		82373	4.034	10833	12236			1.44	Si
SLU 77	2.77	-80997	-8205	16140.5		71709	4.034	10833	12236			1.49	Si
SLU 84	0.67	-93594	-8627	-13503.71		82862	4.034	10833	12236			1.42	Si
SLU 84	2.77	-81704	-8341	16319.47		72335	4.034	10833	12236			1.47	Si
SLU 74	0.67	-91568	-8240	-13374.4		81068	4.034	10833	12236			1.49	Si
SLU 74	2.77	-79586	-7930	15798.21		70460	4.034	10833	12236			1.54	Si
SLU 81	0.67	-92962	-8504	-13242.97		82303	4.034	10833	12236			1.44	Si
SLU 81	2.77	-81099	-8191	16240.49		71799	4.034	10833	12236			1.49	Si
SLU 83	0.67	-94436	-8784	-13606.63		83607	4.034	10833	12236			1.39	Si
SLU 83	2.77	-82510	-8466	16582.78		73049	4.034	10833	12236			1.45	Si

Verifica a taglio nel piano secondo D.M. 17-01-18 (N.T.C.) §7.8.2.2.2 con rottura per scorrimento in combinazioni sismiche, γM = 2

Comb.	Quota	N	V par	M	σ0	σN	I'	fvd	Vt scorr.	Vt fess.diag.	Vt,lim	c.s.	Verifica
SLV 1	0.67	-45792	15387	14975.27		40541	4.034	16250	18355			1.19	Si
SLV 1	2.77	-29239	13635	4365.75		25886	4.034	13511	15260			1.12	Si
SLV 12	0.67	-65995	-13440	-11144.47		58427	4.034	16250	18355			1.37	Si
SLV 12	2.77	-63688	-12771	14353.25		56385	4.034	16250	18355			1.44	Si
SLV 13	0.67	-80864	-23849	-37307.19		71591	4.034	16250	18355			0.77	No, Vu<V
SLV 13	2.77	-76149	-21584	14381.1		67417	4.034	16250	18355			0.85	No, Vu<V
SLV 16	0.67	-79667	-25383	-33677.72		70531	4.034	16250	18355			0.72	No, Vu<V
SLV 16	2.77	-77975	-23206	15986.11		69034	4.034	16250	18355			0.79	No, Vu<V
SLV 2	0.67	-45792	15387	14975.27		40541	4.034	16250	18355			1.19	Si
SLV 2	2.77	-29239	13635	4365.75		25886	4.034	13511	15260			1.12	Si
SLV 4	0.67	-44595	13853	18604.75		39481	4.034	16230	18332			1.32	Si
SLV 4	2.77	-31065	12013	5970.76		27503	4.034	13834	15626			1.3	Si
SLV 15	0.67	-79667	-25383	-33677.72		70531	4.034	16250	18355			0.72	No, Vu<V
SLV 15	2.77	-77975	-23206	15986.11		69034	4.034	16250	18355			0.79	No, Vu<V
SLV 3	0.67	-44595	13853	18604.75		39481	4.034	16230	18332			1.32	Si
SLV 3	2.77	-31065	12013	5970.76		27503	4.034	13834	15626			1.3	Si
SLV 14	0.67	-80864	-23849	-37307.19		71591	4.034	16250	18355			0.77	No, Vu<V
SLV 14	2.77	-76149	-21584	14381.1		67417	4.034	16250	18355			0.85	No, Vu<V
SLV 11	0.67	-65995	-13440	-11144.47		58427	4.034	16250	18355			1.37	Si
SLV 11	2.77	-63688	-12771	14353.25		56385	4.034	16250	18355			1.44	Si

Verifica a pressoflessione fuori piano D.M. 17-01-18 (N.T.C.)

quota 2.51 Wa 0.05 denominatore 8 γM = 2

Comb.	fd	Sa	σ0	N	M	Mc	Coeff.s.	Verifica
SLV 1	143750	0.3	27553	-31122	358.25	3374.54	9.42	Si
SLV 2	143750	0.3	27553	-31122	358.25	3374.54	9.42	Si
SLV 3	143750	0.3	28995	-32750	358.25	3497.02	9.76	Si
SLV 4	143750	0.3	28995	-32750	358.25	3497.02	9.76	Si
SLV 5	143750	0.3	39866	-45029	358.25	4247.28	11.86	Si
SLV 6	143750	0.3	39866	-45029	358.25	4247.28	11.86	Si
SLV 7	143750	0.3	44672	-50458	358.25	4481.46	12.51	Si
SLV 8	143750	0.3	44672	-50458	358.25	4481.46	12.51	Si
SLV 9	143750	0.3	51862	-58579	358.25	4720.16	13.18	Si
SLV 10	143750	0.3	51862	-58579	358.25	4720.16	13.18	Si

Verifica dei meccanismi locali di collasso con analisi cinematica lineare

forza di aggancio al piano = 0 quota mezzeria = 2.51 Wa = 0.05 Ta = 0.0808

Comb.	N top	N base	V orto	α0	M*	e*	a0*	aLim	Verifica
SLV 3	-29087	-44595	-265	0.034	3548.5	0.952	0.52387	10.39734	No
SLV 4	-29087	-44595	-265	0.034	3548.5	0.952	0.52387	10.39734	No
SLV 14	-57691	-80864	265	0.036	6458.8	0.972	0.53874	10.39734	No
SLV 13	-57691	-80864	265	0.036	6458.8	0.972	0.53874	10.39734	No
SLV 7	-42404	-55473	-426	0.032	4902.6	0.964	0.48096	9.1791	No
SLV 8	-42404	-55473	-426	0.032	4902.6	0.964	0.48096	9.1791	No
SLV 10	-44373	-69985	426	0.032	5103	0.965	0.48387	9.1791	No
SLV 9	-44373	-69985	426	0.032	5103	0.965	0.48387	9.1791	No
SLV 5	-35138	-59464	336	0.033	4163.5	0.958	0.50149	9.1791	No
SLV 6	-35138	-59464	336	0.033	4163.5	0.958	0.50149	9.1791	No

Tabella dei coefficienti di sicurezza minimi

Stato limite	Coeff.s.	Comb.	Verifica
PF_SLU	0	SLU 77	No

Stato limite	Coeff.s.	Comb.	Verifica
V_SLU	1.393	SLU 83	Si
PF_SLV	1.81	SLV 13	Si
V_SLV	0.723	SLV 15	No
PFFP_SLV	9.42	SLV 1	Si
R_SLV	0.05	SLV 3	No

Maschio 82

Verifiche condotte secondo D.M. 17-01-18 (N.T.C.)

Dati geometrici

X ini.	Y ini.	X fin.	Y fin.	Quota i.	Quota.s	l	Sp.	h netta	h ini.	h fin.	a	a.s.,sx	a.s.,dx
-11.893	3.334	-15.038	3.334	L3	L4	3.145	0.14	3.68	3.68	3.68			

Caratteristiche del materiale

(Circolare 7 21-01-19 C8.5.I) Muratura in mattoni pieni e malta di calce LC2_Corti

fb	fk	fvk0	fmedio	τ0	fv0	μ	ϕ	fv,lim	E	G	FC
600000			345000	9000	20000	0.58	0.77	32500	320000000	128000000	1.2

Verifica a pressoflessione nel piano secondo D.M. 17-01-18 NTC §7.8.2.2.1 in combinazioni non sismiche, γM = 3

Comb.	Quota	N	M	σ0	Mu	c.s.	Verifica
SLU 81	0.67	-15959	3368.13	36249	13927.55	4.135	Si
SLU 81	2.77	-17672	4797.05	40139	14095.2	2.938	Si
SLU 77	0.67	-15402	3271.83	34982	13817.43	4.223	Si
SLU 77	2.77	-16918	4692.44	38427	14053.11	2.995	Si
SLU 75	0.67	-15408	3276.02	34996	13818.78	4.218	Si
SLU 75	2.77	-16928	4697.98	38449	14053.96	2.991	Si
SLU 73	0.67	-15211	3236.3	34548	13773.5	4.256	Si
SLU 73	2.77	-16689	4636.21	37906	14030.42	3.026	Si
SLU 83	0.67	-15949	3362.43	36225	13925.71	4.142	Si
SLU 83	2.77	-17658	4789.39	40106	14094.86	2.943	Si
SLU 74	0.67	-15412	3277.52	35006	13819.78	4.217	Si
SLU 74	2.77	-16933	4700.1	38460	14054.39	2.99	Si
SLU 76	0.67	-15200	3230.61	34524	13770.96	4.263	Si
SLU 76	2.77	-16674	4628.55	37873	14028.83	3.031	Si
SLU 84	0.67	-15944	3360.93	36214	13924.92	4.143	Si
SLU 84	2.77	-17653	4787.27	40095	14094.75	2.944	Si
SLU 78	0.67	-15397	3270.33	34971	13816.42	4.225	Si
SLU 78	2.77	-16913	4690.32	38416	14052.68	2.996	Si
SLU 82	0.67	-15955	3366.63	36238	13926.77	4.137	Si
SLU 82	2.77	-17667	4794.93	40128	14095.09	2.94	Si

Verifica a pressoflessione nel piano secondo D.M. 17-01-18 NTC §7.8.2.2.1 in combinazioni sismiche, γM = 2

Comb.	Quota	N	M	σ0	Mu	c.s.	Verifica
SLV 8	0.67	3759	4336.24	0	0	0	No, Trazione
SLV 8	2.77	2189	2687.93	0	0	0	No, Trazione
SLV 7	0.67	3759	4336.24	0	0	0	No, Trazione
SLV 7	2.77	2189	2687.93	0	0	0	No, Trazione
SLV 3	0.67	-6864	11264.51	0	0	0	No, e>l/2
SLV 3	2.77	-12562	4044.11	28533	15140.37	3.744	Si
SLV 11	0.67	4199	-1186.64	0	0	0	No, Trazione
SLV 11	2.77	5717	2071.46	0	0	0	No, Trazione
SLV 2	0.67	-15528	11680.16	35270	17368.88	1.487	Si
SLV 2	2.77	-21678	4590.08	49238	20350.9	4.434	Si
SLV 4	0.67	-6864	11264.51	0	0	0	No, e>l/2
SLV 4	2.77	-12562	4044.11	28533	15140.37	3.744	Si
SLV 16	0.67	-5396	-7145.08	12257	7633.91	1.068	Si
SLV 16	2.77	-803	1989.21	0	0	0	No, e>l/2
SLV 1	0.67	-15528	11680.16	35270	17368.88	1.487	Si
SLV 1	2.77	-21678	4590.08	49238	20350.9	4.434	Si
SLV 12	0.67	4199	-1186.64	0	0	0	No, Trazione
SLV 12	2.77	5717	2071.46	0	0	0	No, Trazione
SLV 15	0.67	-5396	-7145.08	12257	7633.91	1.068	Si
SLV 15	2.77	-803	1989.21	0	0	0	No, e>l/2

Verifica a taglio nel piano secondo D.M. 17-01-18 (N.T.C.) §7.8.2.2.2 con rottura per scorrimento in combinazioni non sismiche, γM = 3

Comb.	Quota	N	V par	M	σ0	σN	l'	fvd	Vt scorr.	Vt fess.diag.	Vt,lim	c.s.	Verifica
SLU 78	0.67	-15397	1698	3270.33		34971	3.1448	10218	4499			2.65	Si
SLU 78	2.77	-16913	2402	4690.32		38416	3.1448	10678	4701			1.96	Si
SLU 81	0.67	-15959	1822	3368.13		36249	3.1448	10389	4574			2.51	Si
SLU 81	2.77	-17672	2551	4797.05		40139	3.1448	10833	4770			1.87	Si
SLU 75	0.67	-15408	1700	3276.02		34996	3.1448	10222	4500			2.65	Si
SLU 75	2.77	-16928	2404	4697.98		38449	3.1448	10682	4703			1.96	Si
SLU 84	0.67	-15944	1821	3360.93		36214	3.1448	10384	4572			2.51	Si
SLU 84	2.77	-17653	2549	4787.27		40095	3.1448	10833	4770			1.87	Si
SLU 73	0.67	-15211	1686	3236.3		34548	3.1448	10162	4474			2.65	Si
SLU 73	2.77	-16689	2381	4636.21		37906	3.1448	10610	4671			1.96	Si
SLU 77	0.67	-15402	1698	3271.83		34982	3.1448	10220	4500			2.65	Si
SLU 77	2.77	-16918	2402	4692.44		38427	3.1448	10679	4702			1.96	Si
SLU 74	0.67	-15412	1700	3277.52		35006	3.1448	10223	4501			2.65	Si
SLU 74	2.77	-16933	2404	4700.1		38460	3.1448	10684	4704			1.96	Si
SLU 76	0.67	-15200	1684	3230.61		34524	3.1448	10159	4473			2.66	Si
SLU 76	2.77	-16674	2379	4628.55		37873	3.1448	10605	4669			1.96	Si
SLU 83	0.67	-15949	1821	3362.43		36225	3.1448	10385	4572			2.51	Si
SLU 83	2.77	-17658	2549	4789.39		40106	3.1448	10833	4770			1.87	Si
SLU 82	0.67	-15955	1823	3366.63		36238	3.1448	10387	4573			2.51	Si
SLU 82	2.77	-17667	2551	4794.93		40128	3.1448	10833	4770			1.87	Si

Verifica a taglio nel piano secondo D.M. 17-01-18 (N.T.C.) §7.8.2.2.2 con rottura per scorrimento in combinazioni sismiche, γM = 2

Comb.	Quota	N	V par	M	σ0	σN	l'	fvd	Vt scorr.	Vt fess.diag.	Vt,lim	c.s.	Verifica
SLV 16	0.67	-5396	-7050	-7145.08		51741	0.7449	16250	1695			0.24	No, Vu<V
SLV 16	2.77	-803	-5708	1989.21		0	0	8333	0			0	No, Vu<V
SLV 3	0.67	-6864	7634	11264.51		0	0	8333	0			0	No, Vu<V
SLV 3	2.77	-12562	7431	4044.11		28533	3.1448	14040	6181			0.83	No, Vu<V
SLV 12	0.67	4199	-3749	-1186.64		0	0	8333	0			0	No, Vu<V
SLV 12	2.77	5717	-2738	2071.46		0	0	8333	0			0	No, Vu<V
SLV 11	0.67	4199	-3749	-1186.64		0	0	8333	0			0	No, Vu<V
SLV 11	2.77	5717	-2738	2071.46		0	0	8333	0			0	No, Vu<V
SLV 8	0.67	3759	656	4336.24		0	0	8333	0			0	No, Vu<V
SLV 8	2.77	2189	1204	2687.93		0	0	8333	0			0	No, Vu<V
SLV 15	0.67	-5396	-7050	-7145.08		51741	0.7449	16250	1695			0.24	No, Vu<V
SLV 15	2.77	-803	-5708	1989.21		0	0	8333	0			0	No, Vu<V
SLV 1	0.67	-15528	9209	11680.16		45076	2.4607	16250	5598			0.61	No, Vu<V
SLV 1	2.77	-21678	8826	4590.08		49238	3.1448	16250	7154			0.81	No, Vu<V
SLV 7	0.67	3759	656	4336.24		0	0	8333	0			0	No, Vu<V
SLV 7	2.77	2189	1204	2687.93		0	0	8333	0			0	No, Vu<V
SLV 2	0.67	-15528	9209	11680.16		45076	2.4607	16250	5598			0.61	No, Vu<V
SLV 2	2.77	-21678	8826	4590.08		49238	3.1448	16250	7154			0.81	No, Vu<V
SLV 4	0.67	-6864	7634	11264.51		0	0	8333	0			0	No, Vu<V
SLV 4	2.77	-12562	7431	4044.11		28533	3.1448	14040	6181			0.83	No, Vu<V

Verifica a pressoflessione fuori piano D.M. 17-01-18 (N.T.C.)

quota 2.51 Wa 0.03 denominatore 8 γM = 2

Comb.	fd	Sa	σ0	N	M	Mc	Coeff.s.	Verifica
SLV 7	143750	0.3	0	2049	145.99	0	0	No, Trazione
SLV 16	143750	0.3	0	-1267	145.99	0	0	No, e>t/2
SLV 11	143750	0.3	0	5438	145.99	0	0	No, Trazione
SLV 15	143750	0.3	0	-1267	145.99	0	0	No, e>t/2
SLV 8	143750	0.3	0	2049	145.99	0	0	No, Trazione
SLV 12	143750	0.3	0	5438	145.99	0	0	No, Trazione
SLV 14	143750	0.3	23632	-10405	145.99	587.46	4.02	Si
SLV 13	143750	0.3	23632	-10405	145.99	587.46	4.02	Si
SLV 3	143750	0.3	28540	-12565	145.99	674.13	4.62	Si
SLV 4	143750	0.3	28540	-12565	145.99	674.13	4.62	Si

Verifica dei meccanismi locali di collasso con analisi cinematica lineare

forza di aggancio al piano = 0 quota mezzeria = 2.51 Wa = 0.03 Ta = 0.1615

Comb.	N top	N base	V orto	α0	M*	e*	a0*	aLim	Verifica
SLV 12	2074	4199	-46	0	0	0	0	13.74169	No, Trazione
SLV 11	2074	4199	-46	0	0	0	0	13.74169	No, Trazione
SLV 8	-299	3759	-39	0	0	0	0	13.74169	No, Trazione
SLV 7	-299	3759	-39	0	0	0	0	13.74169	No, Trazione
SLV 6	-26782	-25124	62	0.018	2955	0.976	0.26513	13.74169	No
SLV 5	-26782	-25124	62	0.018	2955	0.976	0.26513	13.74169	No
SLV 10	-24409	-24684	55	0.018	2713.3	0.974	0.26809	13.74169	No
SLV 9	-24409	-24684	55	0.018	2713.3	0.974	0.26809	13.74169	No
SLV 2	-20281	-15528	35	0.019	2292.9	0.97	0.28008	13.74169	No
SLV 1	-20281	-15528	35	0.019	2292.9	0.97	0.28008	13.74169	No

Tabella dei coefficienti di sicurezza minimi

Stato limite	Coeff.s.	Comb.	Verifica
PF_SLU	2.938	SLU 81	Si
V_SLU	1.87	SLU 81	Si
PF_SLV	0	SLV 12	No
V_SLV	0	SLV 3	No
PFFP_SLV	0	SLV 12	No
R_SLV	0	SLV 12	No

Maschio 83

Verifiche condotte secondo D.M. 17-01-18 (N.T.C.)

Dati geometrici

X ini.	Y ini.	X fin.	Y fin.	Quota i.	Quota.s	l	Sp.	h netta	h ini.	h fin.	a	a.s.,sx	a.s.,dx
-9.746	3.334	-11.093	3.334	L3	L4	1.347	0.14	3.68	3.68	3.68			

Caratteristiche del materiale

(Circolare 7 21-01-19 C8.5.I) Muratura in mattoni pieni e malta di calce LC2_Corti

fb	fk	fvk0	fmedio	τ0	fv0	μ	ϕ	fv,lim	E	G	FC
600000			345000	9000	20000	0.58	0.77	32500	320000000	128000000	1.2

Verifica a pressoflessione nel piano secondo D.M. 17-01-18 NTC §7.8.2.2.1 in combinazioni non sismiche, γM = 3

Comb.	Quota	N	M	σ0	Mu	c.s.	Verifica
SLU 84	0.67	-8840	-1739.57	46878	2527.13	1.453	Si
SLU 84	2.77	-11491	802.84	60942	1949.18	2.428	Si
SLU 83	0.67	-8842	-1739.89	46891	2526.89	1.452	Si
SLU 83	2.77	-11494	802.65	60953	1948.49	2.428	Si
SLU 79	0.67	-8441	-1645.37	44767	2560.66	1.556	Si
SLU 79	2.77	-10840	724.03	57488	2148.24	2.967	Si
SLU 75	0.67	-8550	-1664.43	45340	2552.94	1.534	Si
SLU 75	2.77	-10988	730.47	58274	2106.22	2.883	Si
SLU 82	0.67	-8836	-1738.66	46858	2527.53	1.454	Si
SLU 82	2.77	-11493	804.1	60951	1948.58	2.423	Si
SLU 74	0.67	-8552	-1664.76	45352	2552.75	1.533	Si
SLU 74	2.77	-10990	730.28	58285	2105.62	2.883	Si

Comb.	Quota	N	M	σ0	Mu	c.s.	Verifica
SLU 80	0.67	-8439	-1645.05	44754	2560.82	1.557	Si
SLU 80	2.77	-10838	724.22	57477	2148.82	2.967	Si
SLU 78	0.67	-8553	-1665.34	45360	2552.64	1.533	Si
SLU 78	2.77	-10987	729.21	58264	2106.74	2.889	Si
SLU 77	0.67	-8556	-1665.67	45373	2552.46	1.532	Si
SLU 77	2.77	-10989	729.02	58275	2106.14	2.889	Si
SLU 81	0.67	-8838	-1738.98	46870	2527.28	1.453	Si
SLU 81	2.77	-11495	803.91	60962	1947.89	2.423	Si

Verifica a pressoflessione nel piano secondo D.M. 17-01-18 NTC §7.8.2.2.1 in combinazioni sismiche, γM = 2

Comb.	Quota	N	M	σ0	Mu	c.s.	Verifica
SLV 11	0.67	682	-1585.25	0	0	0	No, Trazione
SLV 11	2.77	-1663	888.51	8822	1039.4	1.17	Si
SLV 16	0.67	-5887	-2955.12	31222	2951.73	0.999	No, M>Mu
SLV 16	2.77	-12641	2434.57	67039	3842.38	1.578	Si
SLV 8	0.67	2019	-461.79	0	0	0	No, Trazione
SLV 8	2.77	2985	-338.45	0	0	0	No, Trazione
SLV 2	0.67	-5728	739.06	30374	2898.34	3.922	Si
SLV 2	2.77	-1908	-1557.05	0	0	0	No, e>l/2
SLV 12	0.67	682	-1585.25	0	0	0	No, Trazione
SLV 12	2.77	-1663	888.51	8822	1039.4	1.17	Si
SLV 7	0.67	2019	-461.79	0	0	0	No, Trazione
SLV 7	2.77	2985	-338.45	0	0	0	No, Trazione
SLV 15	0.67	-5887	-2955.12	31222	2951.73	0.999	No, M>Mu
SLV 15	2.77	-12641	2434.57	67039	3842.38	1.578	Si
SLV 4	0.67	-1433	789.76	7598	904.84	1.146	Si
SLV 4	2.77	2853	-1655.29	0	0	0	No, Trazione
SLV 1	0.67	-5728	739.06	30374	2898.34	3.922	Si
SLV 1	2.77	-1908	-1557.05	0	0	0	No, e>l/2
SLV 3	0.67	-1433	789.76	7598	904.84	1.146	Si
SLV 3	2.77	2853	-1655.29	0	0	0	No, Trazione

Verifica a taglio nel piano secondo D.M. 17-01-18 (N.T.C.) §7.8.2.2.2 con rottura per scorrimento in combinazioni non sismiche, γM = 3

Comb.	Quota	N	V par	M	σ0	σN	l'	fvd	Vt scorr.	Vt fess.diag.	Vt,lim	c.s.	Verifica
SLU 82	0.67	-8836	-1896	-1738.66		46858	1.3469	10833	2043			1.08	Si
SLU 82	2.77	-11493	-2549	804.1		60951	1.3469	10833	2043			0.8	No, Vu<V
SLU 75	0.67	-8550	-1772	-1664.43		45340	1.3469	10833	2043			1.15	Si
SLU 75	2.77	-10988	-2403	730.47		58274	1.3469	10833	2043			0.85	No, Vu<V
SLU 83	0.67	-8842	-1894	-1739.89		46891	1.3469	10833	2043			1.08	Si
SLU 83	2.77	-11494	-2547	802.65		60953	1.3469	10833	2043			0.8	No, Vu<V
SLU 84	0.67	-8840	-1894	-1739.57		46878	1.3469	10833	2043			1.08	Si
SLU 84	2.77	-11491	-2547	802.84		60942	1.3469	10833	2043			0.8	No, Vu<V
SLU 77	0.67	-8556	-1770	-1665.67		45373	1.3469	10833	2043			1.15	Si
SLU 77	2.77	-10989	-2401	729.02		58275	1.3469	10833	2043			0.85	No, Vu<V
SLU 76	0.67	-8434	-1755	-1643.92		44725	1.3469	10833	2043			1.16	Si
SLU 76	2.77	-10839	-2378	725.6		57479	1.3469	10833	2043			0.86	No, Vu<V
SLU 74	0.67	-8552	-1772	-1664.76		45352	1.3469	10833	2043			1.15	Si
SLU 74	2.77	-10990	-2403	730.28		58285	1.3469	10833	2043			0.85	No, Vu<V
SLU 81	0.67	-8838	-1896	-1738.98		46870	1.3469	10833	2043			1.08	Si
SLU 81	2.77	-11495	-2549	803.91		60962	1.3469	10833	2043			0.8	No, Vu<V
SLU 73	0.67	-8430	-1757	-1643.01		44705	1.3469	10833	2043			1.16	Si
SLU 73	2.77	-10840	-2380	726.86		57488	1.3469	10833	2043			0.86	No, Vu<V
SLU 78	0.67	-8553	-1770	-1665.34		45360	1.3469	10833	2043			1.15	Si
SLU 78	2.77	-10987	-2401	729.21		58264	1.3469	10833	2043			0.85	No, Vu<V

Verifica a taglio nel piano secondo D.M. 17-01-18 (N.T.C.) §7.8.2.2.2 con rottura per scorrimento in combinazioni sismiche, γM = 2

Comb.	Quota	N	V par	M	σ0	σN	l'	fvd	Vt scorr.	Vt fess.diag.	Vt,lim	c.s.	Verifica
SLV 1	0.67	-5728	1998	739.06		30374	1.3469	14408	2717			1.36	Si
SLV 1	2.77	-1908	1437	-1557.05		0	0	8333	0			0	No, Vu<V
SLV 11	0.67	682	-1661	-1585.25		0	0	8333	0			0	No, Vu<V
SLV 11	2.77	-1663	-960	888.51		28427	0.418	14019	820			0.85	No, Vu<V
SLV 12	0.67	682	-1661	-1585.25		0	0	8333	0			0	No, Vu<V
SLV 12	2.77	-1663	-960	888.51		28427	0.418	14019	820			0.85	No, Vu<V
SLV 4	0.67	-1433	2268	789.76		27914	0.3666	13916	714			0.31	No, Vu<V
SLV 4	2.77	2853	2424	-1655.29		0	0	8333	0			0	No, Vu<V
SLV 2	0.67	-5728	1998	739.06		30374	1.3469	14408	2717			1.36	Si
SLV 2	2.77	-1908	1437	-1557.05		0	0	8333	0			0	No, Vu<V
SLV 3	0.67	-1433	2268	789.76		27914	0.3666	13916	714			0.31	No, Vu<V
SLV 3	2.77	2853	2424	-1655.29		0	0	8333	0			0	No, Vu<V
SLV 8	0.67	2019	298	-461.79		0	0	8333	0			0	No, Vu<V
SLV 8	2.77	2985	1134	-338.45		0	0	8333	0			0	No, Vu<V
SLV 16	0.67	-5887	-4261	-2955.12		81732	0.5145	16250	1171			0.27	No, Vu<V
SLV 16	2.77	-12641	-4554	2434.57		67039	1.3469	16250	3064			0.67	No, Vu<V
SLV 7	0.67	2019	298	-461.79		0	0	8333	0			0	No, Vu<V
SLV 7	2.77	2985	1134	-338.45		0	0	8333	0			0	No, Vu<V
SLV 15	0.67	-5887	-4261	-2955.12		81732	0.5145	16250	1171			0.27	No, Vu<V
SLV 15	2.77	-12641	-4554	2434.57		67039	1.3469	16250	3064			0.67	No, Vu<V

Verifica a pressoflessione fuori piano D.M. 17-01-18 (N.T.C.)

quota 2.51 Wa 0.03 denominatore 8 γM = 2

Comb.	fd	Sa	σ0	N	M	Mc	Coeff.s.	Verifica
SLV 4	143750	0.3	0	2056	62.53	0	0	No, Trazione
SLV 7	143750	0.3	0	2695	62.53	0	0	No, Trazione
SLV 8	143750	0.3	0	2695	62.53	0	0	No, Trazione
SLV 3	143750	0.3	0	2056	62.53	0	0	No, Trazione
SLV 12	143750	0.3	7990	-1507	62.53	98.57	1.58	Si
SLV 11	143750	0.3	7990	-1507	62.53	98.57	1.58	Si
SLV 2	143750	0.3	14281	-2693	62.53	166.47	2.66	Si
SLV 1	143750	0.3	14281	-2693	62.53	166.47	2.66	Si
SLV 9	143750	0.3	91938	-17336	62.53	300.43	4.8	Si

Comb.	fd	Sa	σ0	N	M	Mc	Coeff.s.	Verifica
SLV 10	143750	0.3	91938	-17336	62.53	300.43	4.8	Si

Verifica dei meccanismi locali di collasso con analisi cinematica lineare

forza di aggancio al piano = 0 quota mezzeria = 2.51 Wa = 0.03 Ta = 0.1615

Comb.	N top	N base	V orto	α0	M*	e*	a0*	aLim	Verifica
SLV 11	41	682	-14	0	0	0	0	13.74169	No, Trazione
SLV 7	726	2019	-54	0	0	0	0	13.74169	No, Trazione
SLV 3	-1365	-1433	-77	0	240.6	0.903	0	13.74169	No
SLV 8	726	2019	-54	0	0	0	0	13.74169	No, Trazione
SLV 4	-1365	-1433	-77	0	240.6	0.903	0	13.74169	No
SLV 12	41	682	-14	0	0	0	0	13.74169	No, Trazione
SLV 16	-3650	-5887	59	0.008	470.1	0.941	0.12426	13.74169	No
SLV 15	-3650	-5887	59	0.008	470.1	0.941	0.12426	13.74169	No
SLV 14	-6128	-10182	80	0.009	721.7	0.96	0.13458	13.74169	No
SLV 13	-6128	-10182	80	0.009	721.7	0.96	0.13458	13.74169	No

Tabella dei coefficienti di sicurezza minimi

Stato limite	Coeff.s.	Comb.	Verifica
PF_SLU	1.452	SLU 83	Si
V_SLU	0.801	SLU 81	No
PF_SLV	0	SLV 12	No
V_SLV	0	SLV 1	No
PFFP_SLV	0	SLV 8	No
R_SLV	0	SLV 12	No

Maschio 84

Verifiche condotte secondo D.M. 17-01-18 (N.T.C.)

Dati geometrici

X ini.	Y ini.	X fin.	Y fin.	Quota i.	Quota.s	l	Sp.	h netta	h ini.	h fin.	a	a.s.,sx	a.s.,dx
-19.713	6.536	-17.796	6.536	L3	L4	1.918	0.28	3.68	3.68	3.68			

Caratteristiche del materiale

(Circolare 7 21-01-19 C8.5.I) Muratura in mattoni pieni e malta di calce LC2_Corti

fb	fk	fvk0	fmedio	τ0	fv0	μ	ϕ	fv,lim	E	G	FC
600000			345000	9000	20000	0.58	0.77	32500	320000000	128000000	1.2

Verifica a pressoflessione nel piano secondo D.M. 17-01-18 NTC §7.8.2.2.1 in combinazioni non sismiche, γM = 3

Comb.	Quota	N	M	σ0	Mu	c.s.	Verifica
SLU 81	1.57	-22795	-2323.84	42456	10464.64	4.503	Si
SLU 81	3.47	-26453	654.47	49269	10022.64	15.314	Si
SLU 78	1.57	-22603	-2326.44	42098	10471.64	4.501	Si
SLU 78	3.47	-26312	691.66	49006	10050.54	14.531	Si
SLU 84	1.57	-23065	-2360.29	42959	10452.07	4.428	Si
SLU 84	3.47	-26861	701.79	50028	9937.08	14.16	Si
SLU 74	1.57	-22333	-2289.99	41595	10478.74	4.576	Si
SLU 74	3.47	-25905	644.34	48247	10126.29	15.716	Si
SLU 82	1.57	-22806	-2321.53	42476	10464.19	4.507	Si
SLU 82	3.47	-26452	652.28	49265	10022.98	15.366	Si
SLU 75	1.57	-22344	-2287.68	41616	10478.51	4.58	Si
SLU 75	3.47	-25903	642.15	48244	10126.6	15.77	Si
SLU 77	1.57	-22592	-2328.76	42077	10471.99	4.497	Si
SLU 77	3.47	-26314	693.85	49009	10050.2	14.485	Si
SLU 80	1.57	-22391	-2308.71	41703	10477.49	4.538	Si
SLU 80	3.47	-26064	692.47	48543	10097.61	14.582	Si
SLU 83	1.57	-23054	-2362.6	42938	10452.65	4.424	Si
SLU 83	3.47	-26862	703.98	50031	9936.71	14.115	Si
SLU 79	1.57	-22380	-2311.02	41682	10477.74	4.534	Si
SLU 79	3.47	-26065	694.66	48546	10097.29	14.536	Si

Verifica a pressoflessione nel piano secondo D.M. 17-01-18 NTC §7.8.2.2.1 in combinazioni sismiche, γM = 2

Comb.	Quota	N	M	σ0	Mu	c.s.	Verifica
SLV 2	1.57	-6776	-6242.18	12621	5825.96	0.933	No, M>Mu
SLV 2	3.47	-20582	5435.35	38333	13542.69	2.492	Si
SLV 3	1.57	-15009	-5716.65	27954	11098.21	1.941	Si
SLV 3	3.47	-26126	5403.47	48660	15073.86	2.79	Si
SLV 5	1.57	-258	-3769.7	0	0	0	No, e>l/2
SLV 5	3.47	-9996	1934.01	18617	8123.61	4.2	Si
SLV 13	1.57	-15594	2573.81	29044	11397.63	4.428	Si
SLV 13	3.47	-8817	-4674.77	16422	7317.76	1.565	Si
SLV 16	1.57	-23827	3099.34	44378	14547.94	4.694	Si
SLV 16	3.47	-14362	-4706.66	26749	10755.49	2.285	Si
SLV 1	1.57	-6776	-6242.18	12621	5825.96	0.933	No, M>Mu
SLV 1	3.47	-20582	5435.35	38333	13542.69	2.492	Si
SLV 14	1.57	-15594	2573.81	29044	11397.63	4.428	Si
SLV 14	3.47	-8817	-4674.77	16422	7317.76	1.565	Si
SLV 15	1.57	-23827	3099.34	44378	14547.94	4.694	Si
SLV 15	3.47	-14362	-4706.66	26749	10755.49	2.285	Si
SLV 4	1.57	-15009	-5716.65	27954	11098.21	1.941	Si
SLV 4	3.47	-26126	5403.47	48660	15073.86	2.79	Si
SLV 6	1.57	-258	-3769.7	0	0	0	No, e>l/2
SLV 6	3.47	-9996	1934.01	18617	8123.61	4.2	Si

Verifica a taglio nel piano secondo D.M. 17-01-18 (N.T.C.) §7.8.2.2.2 con rottura per scorrimento in combinazioni non sismiche, γM = 3

Comb.	Quota	N	V par	M	σ0	σN	l'	fvd	Vt scorr.	Vt fess.diag.	Vt,lim	c.s.	Verifica
SLU 77	1.57	-22592	-4615	-2328.76		42077	1.9176	10833	5817			1.26	Si
SLU 77	3.47	-26314	-4634	693.85		49009	1.9176	10833	5817			1.26	Si
SLU 81	1.57	-22795	-4560	-2323.84		42456	1.9176	10833	5817			1.28	Si
SLU 81	3.47	-26453	-4578	654.47		49269	1.9176	10833	5817			1.27	Si
SLU 83	1.57	-23054	-4682	-2362.6		42938	1.9176	10833	5817			1.24	Si
SLU 83	3.47	-26862	-4701	703.98		50031	1.9176	10833	5817			1.24	Si
SLU 78	1.57	-22603	-4607	-2326.44		42098	1.9176	10833	5817			1.26	Si
SLU 78	3.47	-26312	-4624	691.66		49006	1.9176	10833	5817			1.26	Si
SLU 74	1.57	-22333	-4493	-2289.99		41595	1.9176	10833	5817			1.29	Si
SLU 74	3.47	-25905	-4511	644.34		48247	1.9176	10833	5817			1.29	Si
SLU 82	1.57	-22806	-4552	-2321.53		42476	1.9176	10833	5817			1.28	Si
SLU 82	3.47	-26452	-4569	652.28		49265	1.9176	10833	5817			1.27	Si
SLU 84	1.57	-23065	-4674	-2360.29		42959	1.9176	10833	5817			1.24	Si
SLU 84	3.47	-26861	-4691	701.79		50028	1.9176	10833	5817			1.24	Si
SLU 79	1.57	-22380	-4588	-2311.02		41682	1.9176	10833	5817			1.27	Si
SLU 79	3.47	-26065	-4607	694.66		48546	1.9176	10833	5817			1.26	Si
SLU 80	1.57	-22391	-4580	-2308.71		41703	1.9176	10833	5817			1.27	Si
SLU 80	3.47	-26064	-4597	692.47		48543	1.9176	10833	5817			1.27	Si
SLU 75	1.57	-22344	-4485	-2287.68		41616	1.9176	10833	5817			1.3	Si
SLU 75	3.47	-25903	-4502	642.15		48244	1.9176	10833	5817			1.29	Si

Verifica a taglio nel piano secondo D.M. 17-01-18 (N.T.C.) §7.8.2.2.2 con rottura per scorrimento in combinazioni sismiche, γM = 2

Comb.	Quota	N	V par	M	σ0	σN	l'	fvd	Vt scorr.	Vt fess.diag.	Vt,lim	c.s.	Verifica
SLV 10	1.57	-2903	-7205	-1124.9		6050	1.7139	9543	4580			0.64	No, Vu<V
SLV 10	3.47	-6466	-2317	-1099.03		12044	1.9176	10742	5768			2.49	Si
SLV 15	1.57	-23827	10224	3099.34		44378	1.9176	16250	8725			0.85	No, Vu<V
SLV 15	3.47	-14362	6822	-4706.66		27093	1.8932	13752	7290			1.07	Si
SLV 3	1.57	-15009	-11707	-5716.65		30919	1.7337	14517	7047			0.6	No, Vu<V
SLV 3	3.47	-26126	-11588	5403.47		48660	1.9176	16250	8725			0.75	No, Vu<V
SLV 4	1.57	-15009	-11707	-5716.65		30919	1.7337	14517	7047			0.6	No, Vu<V
SLV 4	3.47	-26126	-11588	5403.47		48660	1.9176	16250	8725			0.75	No, Vu<V
SLV 2	1.57	-6776	-16209	-6242.18		214496	0.1128	16250	513			0.03	No, Vu<V
SLV 2	3.47	-20582	-12832	5435.35		38333	1.9176	16000	8591			0.67	No, Vu<V
SLV 5	1.57	-258	-13784	-3769.7		0	0	8333	0			0	No, Vu<V
SLV 5	3.47	-9996	-7840	1934.01		18617	1.9176	12057	6473			0.83	No, Vu<V
SLV 1	1.57	-6776	-16209	-6242.18		214496	0.1128	16250	513			0.03	No, Vu<V
SLV 1	3.47	-20582	-12832	5435.35		38333	1.9176	16000	8591			0.67	No, Vu<V
SLV 6	1.57	-258	-13784	-3769.7		0	0	8333	0			0	No, Vu<V
SLV 6	3.47	-9996	-7840	1934.01		18617	1.9176	12057	6473			0.83	No, Vu<V
SLV 9	1.57	-2903	-7205	-1124.9		6050	1.7139	9543	4580			0.64	No, Vu<V
SLV 9	3.47	-6466	-2317	-1099.03		12044	1.9176	10742	5768			2.49	Si
SLV 16	1.57	-23827	10224	3099.34		44378	1.9176	16250	8725			0.85	No, Vu<V
SLV 16	3.47	-14362	6822	-4706.66		27093	1.8932	13752	7290			1.07	Si

Verifica a pressoflessione fuori piano D.M. 17-01-18 (N.T.C.)

quota 2.51 Wa 0.05 denominatore 8 γM = 2

Comb.	fd	Sa	σ0	N	M	Mc	Coeff.s.	Verifica
SLV 10	143750	0.3	9222	-4951	166.42	640.89	3.85	Si
SLV 9	143750	0.3	9222	-4951	166.42	640.89	3.85	Si
SLV 6	143750	0.3	10338	-5551	166.42	711.36	4.27	Si
SLV 5	143750	0.3	10338	-5551	166.42	711.36	4.27	Si
SLV 14	143750	0.3	23005	-12352	166.42	1403.68	8.43	Si
SLV 13	143750	0.3	23005	-12352	166.42	1403.68	8.43	Si
SLV 1	143750	0.3	26726	-14349	166.42	1569.52	9.43	Si
SLV 2	143750	0.3	26726	-14349	166.42	1569.52	9.43	Si
SLV 16	143750	0.3	35935	-19294	166.42	1906.78	11.46	Si
SLV 15	143750	0.3	35935	-19294	166.42	1906.78	11.46	Si

Verifica dei meccanismi locali di collasso con analisi cinematica lineare

forza di aggancio al piano = 0 quota mezzeria = 2.51 Wa = 0.05 Ta = 0.0808

Comb.	N top	N base	V orto	α0	M*	e*	a0*	aLim	Verifica
SLV 6	-8675	-2146	-135	0.032	1164.6	0.934	0.49154	9.1791	No
SLV 5	-8675	-2146	-135	0.032	1164.6	0.934	0.49154	9.1791	No
SLV 9	-7384	-2661	-122	0.032	1034.3	0.927	0.50275	9.1791	No
SLV 10	-7384	-2661	-122	0.032	1034.3	0.927	0.50275	9.1791	No
SLV 2	-14896	-9725	-62	0.038	1795.5	0.955	0.58473	10.39734	No
SLV 1	-14896	-9725	-62	0.038	1795.5	0.955	0.58473	10.39734	No
SLV 15	-14632	-18450	57	0.039	1768.7	0.954	0.58951	10.39734	No
SLV 16	-14632	-18450	57	0.039	1768.7	0.954	0.58951	10.39734	No
SLV 12	-20854	-26029	130	0.035	2401.4	0.965	0.53113	9.1791	No
SLV 11	-20854	-26029	130	0.035	2401.4	0.965	0.53113	9.1791	No

Tabella dei coefficienti di sicurezza minimi

Stato limite	Coeff.s.	Comb.	Verifica
PF_SLU	4.424	SLU 83	Si
V_SLU	1.237	SLU 83	Si
PF_SLV	0	SLV 5	No
V_SLV	0	SLV 5	No
PFFP_SLV	3.851	SLV 9	Si
R_SLV	0.054	SLV 5	No

Maschio 85

Verifiche condotte secondo D.M. 17-01-18 (N.T.C.)

Dati geometrici

X ini.	Y ini.	X fin.	Y fin.	Quota i.	Quota.s	l	Sp.	h netta	h ini.	h fin.	a	a.s.,sx	a.s.,dx
-16.796	6.536	-12.901	6.536	L3	L4	3.895	0.28	3.68	3.68	3.68			

Caratteristiche del materiale

(Circolare 7 21-01-19 C8.5.I) Muratura in mattoni pieni e malta di calce LC2_Corti

fb	fk	fvk0	fmedio	τ0	fv0	μ	ϕ	fv,lim	E	G	FC
600000			345000	9000	20000	0.58	0.77	32500	320000000	128000000	1.2

Verifica a pressoflessione nel piano secondo D.M. 17-01-18 NTC §7.8.2.2.1 in combinazioni non sismiche, γM = 3

Comb.	Quota	N	M	σ0	Mu	c.s.	Verifica
SLU 82	1.57	-58091	-4578.25	53265	39155.6	8.553	Si
SLU 82	3.47	-55116	-1939.58	50538	40744.54	21.007	Si
SLU 79	1.57	-57611	-4630.68	52825	39438.03	8.517	Si
SLU 79	3.47	-54599	-1643.07	50063	40981.29	24.942	Si
SLU 83	1.57	-59029	-4699.71	54126	38573.68	8.208	Si
SLU 83	3.47	-56081	-1855.42	51422	40271.76	21.705	Si
SLU 78	1.57	-58113	-4658.36	53286	39141.98	8.403	Si
SLU 78	3.47	-55107	-1669.25	50530	40748.61	24.411	Si
SLU 81	1.57	-58072	-4587.82	53248	39166.84	8.537	Si
SLU 81	3.47	-55098	-1930.11	50521	40752.82	21.114	Si
SLU 74	1.57	-57137	-4556.04	52391	39707.17	8.715	Si
SLU 74	3.47	-54107	-1734.47	49613	41195.28	23.751	Si
SLU 75	1.57	-57156	-4546.47	52408	39696.69	8.731	Si
SLU 75	3.47	-54125	-1743.94	49629	41187.76	23.618	Si
SLU 84	1.57	-59048	-4690.13	54143	38561.65	8.222	Si
SLU 84	3.47	-56098	-1864.89	51438	40262.71	21.59	Si
SLU 77	1.57	-58094	-4667.93	53268	39153.24	8.388	Si
SLU 77	3.47	-55090	-1659.78	50513	40756.9	24.556	Si
SLU 80	1.57	-57630	-4621.11	52842	39427.16	8.532	Si
SLU 80	3.47	-54616	-1652.54	50079	40973.39	24.794	Si

Verifica a pressoflessione nel piano secondo D.M. 17-01-18 NTC §7.8.2.2.1 in combinazioni sismiche, γM = 2

Comb.	Quota	N	M	σ0	Mu	c.s.	Verifica
SLV 13	1.57	-26886	17462.74	24652	41795.72	2.393	Si
SLV 13	3.47	-28986	-20116.64	26578	44171.4	2.196	Si
SLV 6	1.57	-7128	-7268.33	6536	13139.83	1.808	Si
SLV 6	3.47	-17540	4922.07	16083	29663.16	6.027	Si
SLV 1	1.57	-31535	-22549.47	28915	46880.5	2.079	Si
SLV 1	3.47	-32334	18004.36	29648	47690.62	2.649	Si
SLV 14	1.57	-26886	17462.74	24652	41795.72	2.393	Si
SLV 14	3.47	-28986	-20116.64	26578	44171.4	2.196	Si
SLV 4	1.57	-51060	-23643.92	46818	61337.06	2.594	Si
SLV 4	3.47	-44010	17781.45	40354	57402.31	3.228	Si
SLV 2	1.57	-31535	-22549.47	28915	46880.5	2.079	Si
SLV 2	3.47	-32334	18004.36	29648	47690.62	2.649	Si
SLV 3	1.57	-51060	-23643.92	46818	61337.06	2.594	Si
SLV 3	3.47	-44010	17781.45	40354	57402.31	3.228	Si
SLV 10	1.57	-5734	4735.33	5257	10685.76	2.257	Si
SLV 10	3.47	-16536	-6514.23	15162	28207.56	4.33	Si
SLV 5	1.57	-7128	-7268.33	6536	13139.83	1.808	Si
SLV 5	3.47	-17540	4922.07	16083	29663.16	6.027	Si
SLV 9	1.57	-5734	4735.33	5257	10685.76	2.257	Si
SLV 9	3.47	-16536	-6514.23	15162	28207.56	4.33	Si

Verifica a taglio nel piano secondo D.M. 17-01-18 (N.T.C.) §7.8.2.2.2 con rottura per scorrimento in combinazioni non sismiche, γM = 3

Comb.	Quota	N	V par	M	σ0	σN	l'	fvd	Vt scorr.	Vt fess.diag.	Vt,lim	c.s.	Verifica
SLU 70	1.57	-52570	-1646	-4236.23		48203	3.895	10833	11815			7.18	Si
SLU 70	3.47	-49358	-1688	-1348.04		45258	3.895	10833	11815			7	Si
SLU 80	1.57	-57630	-1707	-4621.11		52842	3.895	10833	11815			6.92	Si
SLU 80	3.47	-54616	-1753	-1652.54		50079	3.895	10833	11815			6.74	Si
SLU 78	1.57	-58113	-1718	-4658.36		53286	3.895	10833	11815			6.88	Si
SLU 78	3.47	-55107	-1765	-1669.25		50530	3.895	10833	11815			6.69	Si
SLU 71	1.57	-52068	-1645	-4208.56		47743	3.895	10833	11815			7.18	Si
SLU 71	3.47	-48849	-1687	-1321.86		44791	3.895	10833	11815			7	Si
SLU 77	1.57	-58094	-1728	-4667.93		53268	3.895	10833	11815			6.84	Si
SLU 77	3.47	-55090	-1775	-1659.78		50513	3.895	10833	11815			6.66	Si
SLU 79	1.57	-57611	-1717	-4630.68		52825	3.895	10833	11815			6.88	Si
SLU 79	3.47	-54599	-1763	-1643.07		50063	3.895	10833	11815			6.7	Si
SLU 84	1.57	-59048	-1637	-4690.13		54143	3.895	10833	11815			7.22	Si
SLU 84	3.47	-56098	-1685	-1864.89		51438	3.895	10833	11815			7.01	Si
SLU 72	1.57	-52087	-1635	-4198.99		47760	3.895	10833	11815			7.23	Si
SLU 72	3.47	-48867	-1677	-1331.33		44807	3.895	10833	11815			7.05	Si
SLU 83	1.57	-59029	-1647	-4699.71		54126	3.895	10833	11815			7.17	Si
SLU 83	3.47	-56081	-1695	-1855.42		51422	3.895	10833	11815			6.97	Si
SLU 69	1.57	-52551	-1656	-4245.8		48186	3.895	10833	11815			7.13	Si
SLU 69	3.47	-49340	-1699	-1338.57		45241	3.895	10833	11815			6.96	Si

Verifica a taglio nel piano secondo D.M. 17-01-18 (N.T.C.) §7.8.2.2.2 con rottura per scorrimento in combinazioni sismiche, γM = 2

Comb.	Quota	N	V par	M	σ0	σN	l'	fvd	Vt scorr.	Vt fess.diag.	Vt,lim	c.s.	Verifica
SLV 4	1.57	-51060	-22816	-23643.92		46818	3.895	16250	17722			0.78	No, Vu<V
SLV 4	3.47	-44010	-20295	17781.45		40354	3.895	16250	17722			0.87	No, Vu<V
SLV 5	1.57	-7128	-10757	-7268.33		9146	2.7836	10163	7921			0.74	No, Vu<V
SLV 5	3.47	-17540	-7346	4922.07		16083	3.895	11550	12596			1.71	Si
SLV 15	1.57	-46411	22327	16368.29		42555	3.895	16250	17722			0.79	No, Vu<V
SLV 15	3.47	-40662	18270	-20339.55		37284	3.895	15790	17221			0.94	No, Vu<V
SLV 2	1.57	-31535	-24542	-22549.47		30461	3.6973	14426	14934			0.61	No, Vu<V
SLV 2	3.47	-32334	-20548	18004.36		29648	3.895	14263	15555			0.76	No, Vu<V
SLV 6	1.57	-7128	-10757	-7268.33		9146	2.7836	10163	7921			0.74	No, Vu<V
SLV 6	3.47	-17540	-7346	4922.07		16083	3.895	11550	12596			1.71	Si

Comb.	Quota	N	V par	M	σ0	σN	l'	fvd	Vt scorr.	Vt fess.diag.	Vt,lim	c.s.	Verifica
SLV 16	1.57	-46411	22327	16368.29		42555	3.895	16250	17722			0.79	No, Vu<V
SLV 16	3.47	-40662	18270	-20339.55		37284	3.895	15790	17221			0.94	No, Vu<V
SLV 1	1.57	-31535	-24542	-22549.47		30461	3.6973	14426	14934			0.61	No, Vu<V
SLV 1	3.47	-32334	-20548	18004.36		29648	3.895	14263	15555			0.76	No, Vu<V
SLV 14	1.57	-26886	20600	17462.74		24659	3.8939	13265	14463			0.7	No, Vu<V
SLV 14	3.47	-28986	18016	-20116.64		27529	3.7605	13839	14572			0.81	No, Vu<V
SLV 13	1.57	-26886	20600	17462.74		24659	3.8939	13265	14463			0.7	No, Vu<V
SLV 13	3.47	-28986	18016	-20116.64		27529	3.7605	13839	14572			0.81	No, Vu<V
SLV 3	1.57	-51060	-22816	-23643.92		46818	3.895	16250	17722			0.78	No, Vu<V
SLV 3	3.47	-44010	-20295	17781.45		40354	3.895	16250	17722			0.87	No, Vu<V

Verifica a pressoflessione fuori piano D.M. 17-01-18 (N.T.C.)

quota 2.51 Wa 0.05 denominatore 8 γM = 2

Comb.	fd	Sa	σ0	N	M	Mc	Coeff.s.	Verifica
SLV 10	143750	0.3	11775	-12842	338.04	1624.63	4.81	Si
SLV 9	143750	0.3	11775	-12842	338.04	1624.63	4.81	Si
SLV 6	143750	0.3	12983	-14159	338.04	1771.65	5.24	Si
SLV 5	143750	0.3	12983	-14159	338.04	1771.65	5.24	Si
SLV 13	143750	0.3	26194	-28567	338.04	3142.04	9.29	Si
SLV 14	143750	0.3	26194	-28567	338.04	3142.04	9.29	Si
SLV 1	143750	0.3	30220	-32957	338.04	3472.88	10.27	Si
SLV 2	143750	0.3	30220	-32957	338.04	3472.88	10.27	Si
SLV 16	143750	0.3	39761	-43363	338.04	4095.33	12.11	Si
SLV 15	143750	0.3	39761	-43363	338.04	4095.33	12.11	Si

Verifica dei meccanismi locali di collasso con analisi cinematica lineare

forza di aggancio al piano = 0 quota mezzeria = 2.51 Wa = 0.05 Ta = 0.0808

Comb.	N top	N base	V orto	α0	M*	e*	a0*	aLim	Verifica
SLV 3	-36845	-47728	76	0.04	4316.8	0.961	0.5982	10.39734	No
SLV 4	-36845	-47728	76	0.04	4316.8	0.961	0.5982	10.39734	No
SLV 10	-14467	-4226	-214	0.034	2047.5	0.926	0.53054	9.1791	No
SLV 9	-14467	-4226	-214	0.034	2047.5	0.926	0.53054	9.1791	No
SLV 5	-15334	-5403	-210	0.034	2134.8	0.928	0.53571	9.1791	No
SLV 6	-15334	-5403	-210	0.034	2134.8	0.928	0.53571	9.1791	No
SLV 16	-33957	-43805	62	0.04	4023	0.958	0.60727	10.39734	No
SLV 15	-33957	-43805	62	0.04	4023	0.958	0.60727	10.39734	No
SLV 8	-46873	-68407	223	0.036	5337.2	0.968	0.54585	9.1791	No
SLV 7	-46873	-68407	223	0.036	5337.2	0.968	0.54585	9.1791	No

Tabella dei coefficienti di sicurezza minimi

Stato limite	Coeff.s.	Comb.	Verifica
PF_SLU	8.208	SLU 83	Si
V_SLU	6.657	SLU 77	Si
PF_SLV	1.808	SLV 5	Si
V_SLV	0.608	SLV 1	No
PFFP_SLV	4.806	SLV 9	Si
R_SLV	0.058	SLV 3	No

Maschio 86

Verifiche condotte secondo D.M. 17-01-18 (N.T.C.)

Dati geometrici

X ini.	Y ini.	X fin.	Y fin.	Quota i.	Quota.s	l	Sp.	h netta	h ini.	h fin.	a	a.s.,sx	a.s.,dx
-11.901	6.536	-8.007	6.536	L3	L4	3.893	0.28	3.68	3.68	3.68			

Caratteristiche del materiale

(Circolare 7 21-01-19 C8.5.I) Muratura in mattoni pieni e malta di calce LC2_Corti

fb	fk	fvk0	fmedio	τ0	fv0	μ	ϕ	fv,lim	E	G	FC
600000			345000	9000	20000	0.58	0.77	32500	320000000	128000000	1.2

Verifica a pressoflessione nel piano secondo D.M. 17-01-18 NTC §7.8.2.2.1 in combinazioni non sismiche, γM = 3

Comb.	Quota	N	M	σ0	Mu	c.s.	Verifica
SLU 74	1.57	-56793	4208.88	52099	39846.9	9.467	Si
SLU 74	3.47	-53383	1831.29	48970	41445.3	22.632	Si
SLU 84	1.57	-58707	4346.83	53854	38727.08	8.909	Si
SLU 84	3.47	-55367	1964.14	50790	40577.33	20.659	Si
SLU 83	1.57	-58673	4335.86	53823	38747.98	8.937	Si
SLU 83	3.47	-55334	1962.89	50760	40593.45	20.68	Si
SLU 82	1.57	-57729	4262.22	52957	39319.3	9.225	Si
SLU 82	3.47	-54359	1941.93	49866	41039.88	21.134	Si
SLU 78	1.57	-57804	4304.46	53026	39275.2	9.124	Si
SLU 78	3.47	-54424	1854.75	49926	41011.17	22.111	Si
SLU 81	1.57	-57696	4251.25	52926	39338.77	9.253	Si
SLU 81	3.47	-54325	1940.68	49835	41054.52	21.155	Si
SLU 75	1.57	-56827	4219.85	52129	39828.75	9.438	Si
SLU 75	3.47	-53416	1832.54	49001	41432.05	22.609	Si
SLU 80	1.57	-57326	4266.65	52587	39551.26	9.27	Si
SLU 80	3.47	-53947	1853	49488	41215.94	22.243	Si
SLU 77	1.57	-57771	4293.49	52995	39294.77	9.152	Si
SLU 77	3.47	-54391	1853.5	49895	41025.91	22.134	Si
SLU 79	1.57	-57293	4255.68	52557	39570.14	9.298	Si
SLU 79	3.47	-53914	1851.75	49457	41229.97	22.265	Si

Verifica a pressoflessione nel piano secondo D.M. 17-01-18 NTC §7.8.2.2.1 in combinazioni sismiche, γM = 2

Comb.	Quota	N	M	σ0	Mu	c.s.	Verifica
SLV 13	1.57	-30698	21638.83	28160	45984.74	2.125	Si
SLV 13	3.47	-31881	-18010.11	29246	47206.26	2.621	Si
SLV 10	1.57	-5903	6470.44	5415	10982.33	1.697	Si
SLV 10	3.47	-16067	-6450.19	14738	27502.99	4.264	Si
SLV 14	1.57	-30698	21638.83	28160	45984.74	2.125	Si
SLV 14	3.47	-31881	-18010.11	29246	47206.26	2.621	Si
SLV 6	1.57	-4703	-5191.96	4315	8832.36	1.701	Si
SLV 6	3.47	-14834	4693.53	13607	25659.84	5.467	Si
SLV 1	1.57	-26697	-17235.82	24491	41553.38	2.411	Si
SLV 1	3.47	-27772	19135.62	25476	42789.26	2.236	Si
SLV 15	1.57	-50750	22977.92	46555	61150.42	2.661	Si
SLV 15	3.47	-44204	-16774.9	40550	57491.65	3.427	Si
SLV 2	1.57	-26697	-17235.82	24491	41553.38	2.411	Si
SLV 2	3.47	-27772	19135.62	25476	42789.26	2.236	Si
SLV 16	1.57	-50750	22977.92	46555	61150.42	2.661	Si
SLV 16	3.47	-44204	-16774.9	40550	57491.65	3.427	Si
SLV 9	1.57	-5903	6470.44	5415	10982.33	1.697	Si
SLV 9	3.47	-16067	-6450.19	14738	27502.99	4.264	Si
SLV 5	1.57	-4703	-5191.96	4315	8832.36	1.701	Si
SLV 5	3.47	-14834	4693.53	13607	25659.84	5.467	Si

Verifica a taglio nel piano secondo D.M. 17-01-18 (N.T.C.) §7.8.2.2.2 con rottura per scorrimento in combinazioni non sismiche, γM = 3

Comb.	Quota	N	V par	M	σ0	σN	I'	fvd	Vt scorr.	Vt fess.diag.	Vt,lim	c.s.	Verifica
SLU 79	1.57	-57293	1349	4255.68		52557	3.8933	10833	11810			8.76	Si
SLU 79	3.47	-53914	1413	1851.75		49457	3.8933	10833	11810			8.36	Si
SLU 77	1.57	-57771	1367	4293.49		52995	3.8933	10833	11810			8.64	Si
SLU 77	3.47	-54391	1432	1853.5		49895	3.8933	10833	11810			8.25	Si
SLU 84	1.57	-58707	1341	4346.83		53854	3.8933	10833	11810			8.81	Si
SLU 84	3.47	-55367	1406	1964.14		50790	3.8933	10833	11810			8.4	Si
SLU 75	1.57	-56827	1336	4219.85		52129	3.8933	10833	11810			8.84	Si
SLU 75	3.47	-53416	1400	1832.54		49001	3.8933	10833	11810			8.43	Si
SLU 76	1.57	-56371	1321	4189.35		51711	3.8933	10833	11810			8.94	Si
SLU 76	3.47	-52961	1385	1831.63		48583	3.8933	10833	11810			8.53	Si
SLU 70	1.57	-52302	1320	3919.94		47979	3.8933	10833	11810			8.95	Si
SLU 70	3.47	-48759	1378	1543.6		44728	3.8933	10833	11810			8.57	Si
SLU 74	1.57	-56793	1331	4208.88		52099	3.8933	10833	11810			8.87	Si
SLU 74	3.47	-53383	1395	1831.29		48970	3.8933	10833	11810			8.46	Si
SLU 78	1.57	-57804	1372	4304.46		53026	3.8933	10833	11810			8.61	Si
SLU 78	3.47	-54424	1437	1854.75		49926	3.8933	10833	11810			8.22	Si
SLU 80	1.57	-57326	1354	4266.65		52587	3.8933	10833	11810			8.72	Si
SLU 80	3.47	-53947	1418	1853		49488	3.8933	10833	11810			8.33	Si
SLU 83	1.57	-58673	1336	4335.86		53823	3.8933	10833	11810			8.84	Si
SLU 83	3.47	-55334	1401	1962.89		50760	3.8933	10833	11810			8.43	Si

Verifica a taglio nel piano secondo D.M. 17-01-18 (N.T.C.) §7.8.2.2.2 con rottura per scorrimento in combinazioni sismiche, γM = 2

Comb.	Quota	N	V par	M	σ0	σN	I'	fvd	Vt scorr.	Vt fess.diag.	Vt,lim	c.s.	Verifica
SLV 15	1.57	-50750	21532	22977.92		46555	3.8933	16250	17714			0.82	No, Vu<V
SLV 15	3.47	-44204	19206	-16774.9		40550	3.8933	16250	17714			0.92	No, Vu<V
SLV 3	1.57	-46750	-22008	-15896.74		42885	3.8933	16250	17714			0.8	No, Vu<V
SLV 3	3.47	-40094	-17848	20370.84		36780	3.8933	15689	17103			0.96	No, Vu<V
SLV 1	1.57	-26697	-19650	-17235.82		24491	3.8933	13231	14424			0.73	No, Vu<V
SLV 1	3.47	-27772	-17237	19135.62		26290	3.7728	13591	14357			0.83	No, Vu<V
SLV 9	1.57	-5903	11402	6470.44		8263	2.5517	9986	7135			0.63	No, Vu<V
SLV 9	3.47	-16067	7562	-6450.19		14738	3.8933	11281	12298			1.63	Si
SLV 10	1.57	-5903	11402	6470.44		8263	2.5517	9986	7135			0.63	No, Vu<V
SLV 10	3.47	-16067	7562	-6450.19		14738	3.8933	11281	12298			1.63	Si
SLV 14	1.57	-30698	23890	21638.83		29431	3.7252	14219	14832			0.62	No, Vu<V
SLV 14	3.47	-31881	19818	-18010.11		29246	3.8933	14182	15460			0.78	No, Vu<V
SLV 2	1.57	-26697	-19650	-17235.82		24491	3.8933	13231	14424			0.73	No, Vu<V
SLV 2	3.47	-27772	-17237	19135.62		26290	3.7728	13591	14357			0.83	No, Vu<V
SLV 4	1.57	-46750	-22008	-15896.74		42885	3.8933	16250	17714			0.8	No, Vu<V
SLV 4	3.47	-40094	-17848	20370.84		36780	3.8933	15689	17103			0.96	No, Vu<V
SLV 13	1.57	-30698	23890	21638.83		29431	3.7252	14219	14832			0.62	No, Vu<V
SLV 13	3.47	-31881	19818	-18010.11		29246	3.8933	14182	15460			0.78	No, Vu<V
SLV 16	1.57	-50750	21532	22977.92		46555	3.8933	16250	17714			0.82	No, Vu<V
SLV 16	3.47	-44204	19206	-16774.9		40550	3.8933	16250	17714			0.92	No, Vu<V

Verifica a pressoflessione fuori piano D.M. 17-01-18 (N.T.C.)

quota 2.51 Wa 0.05 denominatore 8 γM = 2

Comb.	fd	Sa	σ0	N	M	Mc	Coeff.s.	Verifica
SLV 5	143750	0.3	10235	-11157	337.89	1431.12	4.24	Si
SLV 6	143750	0.3	10235	-11157	337.89	1431.12	4.24	Si
SLV 9	143750	0.3	11392	-12418	337.89	1576.46	4.67	Si
SLV 10	143750	0.3	11392	-12418	337.89	1576.46	4.67	Si
SLV 1	143750	0.3	25548	-27850	337.89	3083.79	9.13	Si
SLV 2	143750	0.3	25548	-27850	337.89	3083.79	9.13	Si
SLV 14	143750	0.3	29405	-32055	337.89	3407.7	10.09	Si
SLV 13	143750	0.3	29405	-32055	337.89	3407.7	10.09	Si
SLV 3	143750	0.3	39831	-43420	337.89	4097.24	12.13	Si
SLV 4	143750	0.3	39831	-43420	337.89	4097.24	12.13	Si

Verifica dei meccanismi locali di collasso con analisi cinematica lineare

forza di aggancio al piano = 0 quota mezzeria = 2.51 Wa = 0.05 Ta = 0.0808

Comb.	N top	N base	V orto	α0	M*	e*	a0*	aLim	Verifica
SLV 15	-36175	-48502	80	0.039	4248.4	0.96	0.59763	10.39734	No
SLV 16	-36175	-48502	80	0.039	4248.4	0.96	0.59763	10.39734	No
SLV 6	-13084	-2607	-205	0.034	1908.1	0.922	0.53574	9.1791	No
SLV 5	-13084	-2607	-205	0.034	1908.1	0.922	0.53574	9.1791	No

Comb.	N top	N base	V orto	α0	M*	e*	a0*	aLim	Verifica
SLV 4	-33598	-43827	44	0.041	3986.3	0.958	0.61498	10.39734	No
SLV 3	-33598	-43827	44	0.041	3986.3	0.958	0.61498	10.39734	No
SLV 1	-23714	-24047	-76	0.04	2982.4	0.946	0.61887	10.39734	No
SLV 2	-23714	-24047	-76	0.04	2982.4	0.946	0.61887	10.39734	No
SLV 10	-13857	-4010	-195	0.035	1985.8	0.924	0.54672	9.1791	No
SLV 9	-13857	-4010	-195	0.035	1985.8	0.924	0.54672	9.1791	No

Tabella dei coefficienti di sicurezza minimi

Stato limite	Coeff.s.	Comb.	Verifica
PF_SLU	8.909	SLU 84	Si
V_SLU	8.219	SLU 78	Si
PF_SLV	1.697	SLV 9	Si
V_SLV	0.621	SLV 13	No
PFFP_SLV	4.235	SLV 5	Si
R_SLV	0.057	SLV 15	No

Maschio 87

Verifiche condotte secondo D.M. 17-01-18 (N.T.C.)

Dati geometrici

X ini.	Y ini.	X fin.	Y fin.	Quota i.	Quota.s	l	Sp.	h netta	h ini.	h fin.	a	a.s.,sx	a.s.,dx
-7.007	6.536	-5.105	6.536	L3	L4	1.902	0.28	3.68	3.68	3.68			

Caratteristiche del materiale

(Circolare 7 21-01-19 C8.5.I) Muratura in mattoni pieni e malta di calce LC2_Corti

fb	fk	fvk0	fmedio	τ0	fv0	μ	ϕ	fv,lim	E	G	FC
600000			345000	9000	20000	0.58	0.77	32500	320000000	128000000	1.2

Verifica a pressoflessione nel piano secondo D.M. 17-01-18 NTC §7.8.2.2.1 in combinazioni non sismiche, γM = 3

Comb.	Quota	N	M	σ0	Mu	c.s.	Verifica
SLU 79	1.57	-19689	1406.72	36965	10229.5	7.272	Si
SLU 79	3.47	-24559	-575.56	46107	10137.77	17.614	Si
SLU 80	1.57	-19727	1413.17	37035	10232.76	7.241	Si
SLU 80	3.47	-24575	-575.16	46137	10135.76	17.623	Si
SLU 84	1.57	-20188	1446.94	37900	10267.85	7.096	Si
SLU 84	3.47	-25231	-619.65	47369	10043.41	16.208	Si
SLU 77	1.57	-19855	1417.58	37275	10243.42	7.226	Si
SLU 77	3.47	-24778	-580.67	46518	10109.2	17.409	Si
SLU 75	1.57	-19548	1402.95	36699	10216.62	7.282	Si
SLU 75	3.47	-24318	-568.09	45654	10166.77	17.896	Si
SLU 83	1.57	-20150	1440.49	37830	10265.34	7.126	Si
SLU 83	3.47	-25215	-620.05	47339	10045.88	16.202	Si
SLU 76	1.57	-19408	1396.39	36436	10203	7.307	Si
SLU 76	3.47	-24109	-562.71	45263	10189.8	18.108	Si
SLU 82	1.57	-19844	1425.86	37254	10242.52	7.183	Si
SLU 82	3.47	-24755	-607.47	46475	10112.27	16.647	Si
SLU 81	1.57	-19806	1419.41	37184	10239.45	7.214	Si
SLU 81	3.47	-24739	-607.87	46445	10114.41	16.639	Si
SLU 78	1.57	-19892	1424.03	37345	10246.41	7.195	Si
SLU 78	3.47	-24794	-580.27	46548	10107.04	17.418	Si

Verifica a pressoflessione nel piano secondo D.M. 17-01-18 NTC §7.8.2.2.1 in combinazioni sismiche, γM = 2

Comb.	Quota	N	M	σ0	Mu	c.s.	Verifica
SLV 6	1.57	-837	670.06	1571	785.85	1.173	Si
SLV 6	3.47	-4763	1017.87	8942	4198.96	4.125	Si
SLV 14	1.57	-4175	5205.63	0	0	0	No, e>l/2
SLV 14	3.47	-18629	-4642.38	34973	12647.36	2.724	Si
SLV 15	1.57	-12543	4664.9	23549	9631.48	2.065	Si
SLV 15	3.47	-24612	-4676.19	46206	14557.35	3.113	Si
SLV 16	1.57	-12543	4664.9	23549	9631.48	2.065	Si
SLV 16	3.47	-24612	-4676.19	46206	14557.35	3.113	Si
SLV 2	1.57	-14061	-2742.72	26398	10484.82	3.823	Si
SLV 2	3.47	-8036	4005.03	15086	6699.75	1.673	Si
SLV 13	1.57	-4175	5205.63	0	0	0	No, e>l/2
SLV 13	3.47	-18629	-4642.38	34973	12647.36	2.724	Si
SLV 9	1.57	2129	3054.57	0	0	0	No, Trazione
SLV 9	3.47	-7941	-1576.35	14908	6631.6	4.207	Si
SLV 5	1.57	-837	670.06	1571	785.85	1.173	Si
SLV 5	3.47	-4763	1017.87	8942	4198.96	4.125	Si
SLV 10	1.57	2129	3054.57	0	0	0	No, Trazione
SLV 10	3.47	-7941	-1576.35	14908	6631.6	4.207	Si
SLV 1	1.57	-14061	-2742.72	26398	10484.82	3.823	Si
SLV 1	3.47	-8036	4005.03	15086	6699.75	1.673	Si

Verifica a taglio nel piano secondo D.M. 17-01-18 (N.T.C.) §7.8.2.2.2 con rottura per scorrimento in combinazioni non sismiche, γM = 3

Comb.	Quota	N	V par	M	σ0	σN	l'	fvd	Vt scorr.	Vt fess.diag.	Vt,lim	c.s.	Verifica
SLU 77	1.57	-19855	4631	1417.58		37275	1.9023	10526	5606			1.21	Si
SLU 77	3.47	-24778	4678	-580.67		46518	1.9023	10833	5770			1.23	Si
SLU 81	1.57	-19806	4651	1419.41		37184	1.9023	10513	5600			1.2	Si
SLU 81	3.47	-24739	4698	-607.87		46445	1.9023	10833	5770			1.23	Si
SLU 78	1.57	-19892	4624	1424.03		37345	1.9023	10535	5611			1.21	Si
SLU 78	3.47	-24794	4670	-580.27		46548	1.9023	10833	5770			1.24	Si
SLU 75	1.57	-19548	4541	1402.95		36699	1.9023	10449	5566			1.23	Si
SLU 75	3.47	-24318	4586	-568.09		45654	1.9023	10833	5770			1.26	Si
SLU 79	1.57	-19689	4596	1406.72		36965	1.9023	10484	5584			1.22	Si
SLU 79	3.47	-24559	4643	-575.56		46107	1.9023	10833	5770			1.24	Si

Comb.	Quota	N	V par	M	σ0	σN	l'	fvd	Vt scorr.	Vt fess.diag.	Vt,lim	c.s.	Verifica
SLU 82	1.57	-19844	4645	1425.86		37254	1.9023	10523	5605			1.21	Si
SLU 82	3.47	-24755	4690	-607.47		46475	1.9023	10833	5770			1.23	Si
SLU 74	1.57	-19511	4548	1396.5		36629	1.9023	10439	5561			1.22	Si
SLU 74	3.47	-24302	4594	-568.49		45624	1.9023	10833	5770			1.26	Si
SLU 83	1.57	-20150	4735	1440.49		37830	1.9023	10600	5646			1.19	Si
SLU 83	3.47	-25215	4783	-620.05		47339	1.9023	10833	5770			1.21	Si
SLU 84	1.57	-20188	4728	1446.94		37900	1.9023	10609	5651			1.2	Si
SLU 84	3.47	-25231	4774	-619.65		47369	1.9023	10833	5770			1.21	Si
SLU 80	1.57	-19727	4589	1413.17		37035	1.9023	10494	5589			1.22	Si
SLU 80	3.47	-24575	4634	-575.16		46137	1.9023	10833	5770			1.25	Si

Verifica a taglio nel piano secondo D.M. 17-01-18 (N.T.C.) §7.8.2.2.2 con rottura per scorrimento in combinazioni sismiche, γM = 2

Comb.	Quota	N	V par	M	σ0	σN	l'	fvd	Vt scorr.	Vt fess.diag.	Vt,lim	c.s.	Verifica
SLV 14	1.57	-4175	14355	5205.63		0	0	8333	0			0	No, Vu<V
SLV 14	3.47	-18629	12034	-4642.38		34973	1.9023	15328	8165			0.68	No, Vu<V
SLV 2	1.57	-14061	-6277	-2742.72		26398	1.9023	13613	7251			1.16	Si
SLV 2	3.47	-8036	-5095	4005.03		21129	1.3583	12559	4777			0.94	No, Vu<V
SLV 5	1.57	-837	3250	670.06		6617	0.4517	9657	1221			0.38	No, Vu<V
SLV 5	3.47	-4763	1803	1017.87		8942	1.9023	10122	5391			2.99	Si
SLV 1	1.57	-14061	-6277	-2742.72		26398	1.9023	13613	7251			1.16	Si
SLV 1	3.47	-8036	-5095	4005.03		21129	1.3583	12559	4777			0.94	No, Vu<V
SLV 13	1.57	-4175	14355	5205.63		0	0	8333	0			0	No, Vu<V
SLV 13	3.47	-18629	12034	-4642.38		34973	1.9023	15328	8165			0.68	No, Vu<V
SLV 15	1.57	-12543	12378	4664.9		25778	1.7378	13489	6564			0.53	No, Vu<V
SLV 15	3.47	-24612	11260	-4676.19		46206	1.9023	16250	8656			0.77	No, Vu<V
SLV 6	1.57	-837	3250	670.06		6617	0.4517	9657	1221			0.38	No, Vu<V
SLV 6	3.47	-4763	1803	1017.87		8942	1.9023	10122	5391			2.99	Si
SLV 10	1.57	2129	9440	3054.57		0	0	8333	0			0	No, Vu<V
SLV 10	3.47	-7941	6941	-1576.35		14908	1.9023	11315	6027			0.87	No, Vu<V
SLV 16	1.57	-12543	12378	4664.9		25778	1.7378	13489	6564			0.53	No, Vu<V
SLV 16	3.47	-24612	11260	-4676.19		46206	1.9023	16250	8656			0.77	No, Vu<V
SLV 9	1.57	2129	9440	3054.57		0	0	8333	0			0	No, Vu<V
SLV 9	3.47	-7941	6941	-1576.35		14908	1.9023	11315	6027			0.87	No, Vu<V

Verifica a pressoflessione fuori piano D.M. 17-01-18 (N.T.C.)

quota 2.51 Wa 0.05 denominatore 8 γM = 2

Comb.	fd	Sa	σ0	N	M	Mc	Coeff.s.	Verifica
SLV 6	143750	0.3	5249	-2796	165.1	374.61	2.27	Si
SLV 5	143750	0.3	5249	-2796	165.1	374.61	2.27	Si
SLV 9	143750	0.3	5868	-3126	165.1	416.56	2.52	Si
SLV 10	143750	0.3	5868	-3126	165.1	416.56	2.52	Si
SLV 1	143750	0.3	20750	-11053	165.1	1284.58	7.78	Si
SLV 2	143750	0.3	20750	-11053	165.1	1284.58	7.78	Si
SLV 13	143750	0.3	22813	-12151	165.1	1383.57	8.38	Si
SLV 14	143750	0.3	22813	-12151	165.1	1383.57	8.38	Si
SLV 4	143750	0.3	34655	-18459	165.1	1851.33	11.21	Si
SLV 3	143750	0.3	34655	-18459	165.1	1851.33	11.21	Si

Verifica dei meccanismi locali di collasso con analisi cinematica lineare

forza di aggancio al piano = 0 quota mezzeria = 2.51 Wa = 0.05 Ta = 0.0808

Comb.	N top	N base	V orto	α0	M*	e*	a0*	aLim	Verifica
SLV 9	-7319	1100	-114	0	0	0	0	9.1791	No, Trazione
SLV 10	-7319	1100	-114	0	0	0	0	9.1791	No, Trazione
SLV 5	-6011	-35	-125	0.031	894	0.919	0.48343	9.1791	No
SLV 6	-6011	-35	-125	0.031	894	0.919	0.48343	9.1791	No
SLV 16	-18277	-13082	55	0.039	2137	0.961	0.5844	10.39734	No
SLV 15	-18277	-13082	55	0.039	2137	0.961	0.5844	10.39734	No
SLV 1	-9564	-9709	-55	0.039	1252.3	0.938	0.60535	10.39734	No
SLV 2	-9564	-9709	-55	0.039	1252.3	0.938	0.60535	10.39734	No
SLV 12	-21831	-22755	125	0.036	2498.6	0.967	0.53541	9.1791	No
SLV 11	-21831	-22755	125	0.036	2498.6	0.967	0.53541	9.1791	No

Tabella dei coefficienti di sicurezza minimi

Stato limite	Coeff.s.	Comb.	Verifica
PF_SLU	7.096	SLU 84	Si
V_SLU	1.192	SLU 83	Si
PF_SLV	0	SLV 10	No
V_SLV	0	SLV 9	No
PFFP_SLV	2.269	SLV 5	Si
R_SLV	0	SLV 10	No

Maschio 88

Verifiche condotte secondo D.M. 17-01-18 (N.T.C.)

Dati geometrici

X ini.	Y ini.	X fin.	Y fin.	Quota i.	Quota.s	l	Sp.	h netta	h ini.	h fin.	a	a.s.,sx	a.s.,dx
-11.003	-4.784	-11.003	-3.509	L3	Z medio 271 cm	1.275	0.28	2.04	2.04	2.04			

Caratteristiche del materiale

(Circolare 7 21-01-19 C8.5.I) Muratura in mattoni pieni e malta di calce LC2_Corti

fb	fk	fvk0	fmedio	τ0	fv0	μ	ϕ	fv,lim	E	G	FC
600000			345000	9000	20000	0.58	0.77	32500	320000000	128000000	1.2

Verifica a pressoflessione nel piano secondo D.M. 17-01-18 NTC §7.8.2.2.1 in combinazioni non sismiche, γM = 3

Comb.	Quota	N	M	σ0	Mu	c.s.	Verifica
SLU 76	0.67	-26069	-986.3	73023	1721.06	1.745	Si
SLU 76	2.71	-18150	307.52	50840	4349.08	14.142	Si
SLU 81	0.67	-26559	-962.49	74396	1467.99	1.525	Si
SLU 81	2.71	-18529	337.24	51902	4285.95	12.709	Si
SLU 78	0.67	-26393	-976.48	73931	1554.82	1.592	Si
SLU 78	2.71	-18424	323.48	51608	4304.09	13.306	Si
SLU 79	0.67	-26248	-953.74	73523	1630.1	1.709	Si
SLU 79	2.71	-18337	319.43	51365	4318.68	13.52	Si
SLU 82	0.67	-26626	-986.52	74583	1432.63	1.452	Si
SLU 82	2.71	-18553	335.04	51970	4281.71	12.78	Si
SLU 84	0.67	-26916	-993.99	75396	1277.08	1.285	Si
SLU 84	2.71	-18781	343.29	52607	4240.52	12.353	Si
SLU 75	0.67	-26103	-969	73118	1703.72	1.758	Si
SLU 75	2.71	-18196	315.23	50970	4341.71	13.773	Si
SLU 80	0.67	-26315	-977.76	73710	1595.66	1.632	Si
SLU 80	2.71	-18361	317.23	51433	4314.63	13.601	Si
SLU 83	0.67	-26849	-969.97	75208	1313.28	1.354	Si
SLU 83	2.71	-18757	345.49	52540	4245.01	12.287	Si
SLU 77	0.67	-26326	-952.45	73744	1589.49	1.669	Si
SLU 77	2.71	-18400	325.67	51540	4308.2	13.229	Si

Verifica a pressoflessione nel piano secondo D.M. 17-01-18 NTC §7.8.2.2.1 in combinazioni sismiche, γM = 2

Comb.	Quota	N	M	σ0	Mu	c.s.	Verifica
SLV 14	0.67	-24018	-2345.27	67276	6880.88	2.934	Si
SLV 14	2.71	-15691	-328.55	43951	6404.73	19.494	Si
SLV 7	0.67	-4802	1232.87	13452	2724.38	2.21	Si
SLV 7	2.71	-4547	9.57	12736	2596.49	271.303	Si
SLV 8	0.67	-4802	1232.87	13452	2724.38	2.21	Si
SLV 8	2.71	-4547	9.57	12736	2596.49	271.303	Si
SLV 13	0.67	-24018	-2345.27	67276	6880.88	2.934	Si
SLV 13	2.71	-15691	-328.55	43951	6404.73	19.494	Si
SLV 6	0.67	-30914	-1893.49	86594	5740.89	3.032	Si
SLV 6	2.71	-20670	723.58	57899	6933.07	9.582	Si
SLV 10	0.67	-31949	-2607.03	89494	5449.79	2.09	Si
SLV 10	2.71	-20976	353.32	58757	6941.91	19.648	Si
SLV 16	0.67	-16184	-1407.36	45334	6489.45	4.611	Si
SLV 16	2.71	-10854	-542.75	30403	5197.6	9.576	Si
SLV 5	0.67	-30914	-1893.49	86594	5740.89	3.032	Si
SLV 5	2.71	-20670	723.58	57899	6933.07	9.582	Si
SLV 9	0.67	-31949	-2607.03	89494	5449.79	2.09	Si
SLV 9	2.71	-20976	353.32	58757	6941.91	19.648	Si
SLV 15	0.67	-16184	-1407.36	45334	6489.45	4.611	Si
SLV 15	2.71	-10854	-542.75	30403	5197.6	9.576	Si

Verifica a taglio nel piano secondo D.M. 17-01-18 (N.T.C.) §7.8.2.2.2 con rottura per scorrimento in combinazioni non sismiche, γM = 3

Comb.	Quota	N	V par	M	σ0	σN	l'	fvd	Vt scorr.	Vt fess.diag.	Vt,lim	c.s.	Verifica
SLU 84	0.67	-26916	-1163	-993.99		75396	1.275	10833	3867			3.33	Si
SLU 84	2.71	-18781	-239	343.29		52607	1.275	10833	3867			16.16	Si
SLU 81	0.67	-26559	-1153	-962.49		74396	1.275	10833	3867			3.36	Si
SLU 81	2.71	-18529	-234	337.24		51902	1.275	10833	3867			16.53	Si
SLU 78	0.67	-26393	-1125	-976.48		73931	1.275	10833	3867			3.44	Si
SLU 78	2.71	-18424	-207	323.48		51608	1.275	10833	3867			18.65	Si
SLU 77	0.67	-26326	-1133	-952.45		73744	1.275	10833	3867			3.41	Si
SLU 77	2.71	-18400	-210	325.67		51540	1.275	10833	3867			18.39	Si
SLU 80	0.67	-26315	-1116	-977.76		73710	1.275	10833	3867			3.47	Si
SLU 80	2.71	-18361	-201	317.23		51433	1.275	10833	3867			19.23	Si
SLU 79	0.67	-26248	-1124	-953.74		73523	1.275	10833	3867			3.44	Si
SLU 79	2.71	-18337	-204	319.43		51365	1.275	10833	3867			18.95	Si
SLU 75	0.67	-26103	-1107	-969		73118	1.275	10833	3867			3.49	Si
SLU 75	2.71	-18196	-199	315.23		50970	1.275	10833	3867			19.42	Si
SLU 82	0.67	-26626	-1145	-986.52		74583	1.275	10833	3867			3.38	Si
SLU 82	2.71	-18553	-231	335.04		51970	1.275	10833	3867			16.74	Si
SLU 74	0.67	-26036	-1115	-944.98		72931	1.275	10833	3867			3.47	Si
SLU 74	2.71	-18172	-202	317.42		50902	1.275	10833	3867			19.14	Si
SLU 83	0.67	-26849	-1170	-969.97		75208	1.275	10833	3867			3.3	Si
SLU 83	2.71	-18757	-242	345.49		52540	1.275	10833	3867			15.97	Si

Verifica a taglio nel piano secondo D.M. 17-01-18 (N.T.C.) §7.8.2.2.2 con rottura per scorrimento in combinazioni sismiche, γM = 2

Comb.	Quota	N	V par	M	σ0	σN	l'	fvd	Vt scorr.	Vt fess.diag.	Vt,lim	c.s.	Verifica
SLV 10	0.67	-31949	-4953	-2607.03		89494	1.275	16250	5801			1.17	Si
SLV 10	2.71	-20976	-3028	353.32		58757	1.275	16250	5801			1.92	Si
SLV 6	0.67	-30914	-6232	-1893.49		86594	1.275	16250	5801			0.93	No, Vu<V
SLV 6	2.71	-20670	-4162	723.58		57899	1.275	16250	5801			1.39	Si
SLV 5	0.67	-30914	-6232	-1893.49		86594	1.275	16250	5801			0.93	No, Vu<V
SLV 5	2.71	-20670	-4162	723.58		57899	1.275	16250	5801			1.39	Si
SLV 9	0.67	-31949	-4953	-2607.03		89494	1.275	16250	5801			1.17	Si
SLV 9	2.71	-20976	-3028	353.32		58757	1.275	16250	5801			1.92	Si
SLV 1	0.67	-20567	-4325	33.21		57611	1.275	16250	5801			1.34	Si
SLV 1	2.71	-14669	-3021	905.64		41091	1.275	16250	5801			1.92	Si
SLV 7	0.67	-4802	3482	1232.87		15014	1.1423	11336	3626			1.04	Si
SLV 7	2.71	-4547	2879	9.57		12736	1.275	10881	3884			1.35	Si
SLV 2	0.67	-20567	-4325	33.21		57611	1.275	16250	5801			1.34	Si
SLV 2	2.71	-14669	-3021	905.64		41091	1.275	16250	5801			1.92	Si
SLV 12	0.67	-5837	4761	519.33		16351	1.275	11604	4142			0.87	No, Vu<V
SLV 12	2.71	-4853	4013	-360.69		13595	1.275	11052	3946			0.98	No, Vu<V
SLV 11	0.67	-5837	4761	519.33		16351	1.275	11604	4142			0.87	No, Vu<V
SLV 11	2.71	-4853	4013	-360.69		13595	1.275	11052	3946			0.98	No, Vu<V
SLV 8	0.67	-4802	3482	1232.87		15014	1.1423	11336	3626			1.04	Si
SLV 8	2.71	-4547	2879	9.57		12736	1.275	10881	3884			1.35	Si

Verifica a pressoflessione fuori piano D.M. 17-01-18 (N.T.C.)

quota 1.69 Wa 0.05 denominatore 8 γM = 2

Comb.	fd	Sa	σ0	N	M	Mc	Coeff.s.	Verifica
SLV 7	143750	0.28	14140	-5048	32.75	624.94	19.09	Si
SLV 8	143750	0.28	14140	-5048	32.75	624.94	19.09	Si
SLV 11	143750	0.28	15247	-5443	32.75	666.96	20.37	Si
SLV 12	143750	0.28	15247	-5443	32.75	666.96	20.37	Si
SLV 4	143750	0.28	32364	-11554	32.75	1189.1	36.31	Si
SLV 3	143750	0.28	32364	-11554	32.75	1189.1	36.31	Si
SLV 16	143750	0.28	36053	-12871	32.75	1270.25	38.79	Si
SLV 15	143750	0.28	36053	-12871	32.75	1270.25	38.79	Si
SLV 2	143750	0.28	49091	-17525	32.75	1467.8	44.82	Si
SLV 1	143750	0.28	49091	-17525	32.75	1467.8	44.82	Si

Verifica dei meccanismi locali di collasso con analisi cinematica lineare

forza di aggancio al piano = 0 quota mezzeria = 1.69 Wa = 0.05 Ta = 0.0248

Comb.	N top	N base	V orto	α0	M*	e*	a0*	aLim	Verifica
SLV 14	-15691	-24018	33	0.069	1700.4	0.981	1.02759	3.83597	No
SLV 13	-15691	-24018	33	0.069	1700.4	0.981	1.02759	3.83597	No
SLV 1	-14669	-20567	15	0.071	1596.3	0.98	1.04656	3.83597	No
SLV 2	-14669	-20567	15	0.071	1596.3	0.98	1.04656	3.83597	No
SLV 15	-10854	-16184	22	0.071	1207.6	0.974	1.05377	3.83597	No
SLV 16	-10854	-16184	22	0.071	1207.6	0.974	1.05377	3.83597	No
SLV 9	-20976	-31949	39	0.069	2239	0.986	1.01601	3.69188	No
SLV 10	-20976	-31949	39	0.069	2239	0.986	1.01601	3.69188	No
SLV 6	-20670	-30914	34	0.069	2207.8	0.985	1.01992	3.69188	No
SLV 5	-20670	-30914	34	0.069	2207.8	0.985	1.01992	3.69188	No

Tabella dei coefficienti di sicurezza minimi

Stato limite	Coeff.s.	Comb.	Verifica
PF_SLU	1.285	SLU 84	Si
V_SLU	3.305	SLU 83	Si
PF_SLV	2.09	SLV 9	Si
V_SLV	0.87	SLV 11	No
PFFP_SLV	19.085	SLV 7	Si
R_SLV	0.268	SLV 13	No

Maschio 89

Verifiche condotte secondo D.M. 17-01-18 (N.T.C.)

Dati geometrici

X ini.	Y ini.	X fin.	Y fin.	Quota i.	Quota.s	l	Sp.	h netta	h ini.	h fin.	a	a.s.,sx	a.s.,dx
-11.003	-4.784	-11.003	-3.509	Z medio 271 cm	L4	1.275	0.28	1.64	1.64	1.64			

Caratteristiche del materiale

(Circolare 7 21-01-19 C8.5.I) Muratura in mattoni pieni e malta di calce LC2_Corti

fb	fk	fvk0	fmedio	τ0	fv0	μ	ϕ	fv,lim	E	G	FC
600000			345000	9000	20000	0.58	0.77	32500	320000000	128000000	1.2

Verifica a pressoflessione nel piano secondo D.M. 17-01-18 NTC §7.8.2.2.1 in combinazioni non sismiche, γM = 3

Comb.	Quota	N	M	σ0	Mu	c.s.	Verifica
SLU 42	2.71	-14712	81.08	41210	4634.07	57.155	Si
SLU 42	4.35	-12209	193.43	34199	4515.58	23.345	Si
SLU 82	2.71	-17542	93.09	49136	4437.26	47.665	Si
SLU 82	4.35	-14488	187.32	40584	4634.66	24.742	Si
SLU 38	2.71	-14360	88.48	40223	4634	52.374	Si
SLU 38	4.35	-11927	181.22	33408	4484.98	24.749	Si
SLU 36	2.71	-14420	92.04	40392	4634.4	50.354	Si
SLU 36	4.35	-11982	187.26	33562	4491.2	23.984	Si
SLU 40	2.71	-14492	76.52	40594	4634.67	60.569	Si
SLU 40	4.35	-12002	185.12	33620	4493.53	24.274	Si
SLU 83	2.71	-17732	98.05	49668	4411.47	44.992	Si
SLU 83	4.35	-14665	188.75	41078	4634.38	24.553	Si
SLU 78	2.71	-17469	108.61	48934	4446.65	40.941	Si
SLU 78	4.35	-14467	189.46	40525	4634.6	24.462	Si
SLU 35	2.71	-14390	92.43	40307	4634.22	50.136	Si
SLU 35	4.35	-11952	180.38	33478	4487.82	24.88	Si
SLU 41	2.71	-14682	81.48	41126	4634.28	56.879	Si
SLU 41	4.35	-12179	186.55	34115	4512.5	24.189	Si
SLU 84	2.71	-17762	97.65	49753	4407.23	45.131	Si
SLU 84	4.35	-14695	195.63	41162	4634.2	23.689	Si

Verifica a pressoflessione nel piano secondo D.M. 17-01-18 NTC §7.8.2.2.1 in combinazioni sismiche, γM = 2

Comb.	Quota	N	M	σ0	Mu	c.s.	Verifica
SLV 1	2.71	-13768	-539.74	38567	6006.9	11.129	Si
SLV 1	4.35	-10853	1029.28	30401	5197.42	5.05	Si
SLV 4	2.71	-9330	-219	26134	4675.69	21.35	Si
SLV 4	4.35	-7359	873.29	20615	3900.09	4.466	Si
SLV 12	2.71	-4918	744.71	13776	2781.81	3.735	Si
SLV 12	4.35	-4423	-429.21	12390	2533.94	5.904	Si
SLV 3	2.71	-9330	-219	26134	4675.69	21.35	Si
SLV 3	4.35	-7359	873.29	20615	3900.09	4.466	Si
SLV 7	2.71	-4564	472.62	12786	2605.35	5.513	Si
SLV 7	4.35	-3897	87.95	10917	2262.51	25.724	Si
SLV 15	2.71	-10509	687.96	29437	5085.46	7.392	Si

Comb.	Quota	N	M	σ0	Mu	c.s.	Verifica
SLV 15	4.35	-9113	-850.57	25527	4595.91	5.403	Si
SLV 2	2.71	-13768	-539.74	38567	6006.9	11.129	Si
SLV 2	4.35	-10853	1029.28	30401	5197.42	5.05	Si
SLV 8	2.71	-4564	472.62	12786	2605.35	5.513	Si
SLV 8	4.35	-3897	87.95	10917	2262.51	25.724	Si
SLV 16	2.71	-10509	687.96	29437	5085.46	7.392	Si
SLV 16	4.35	-9113	-850.57	25527	4595.91	5.403	Si
SLV 11	2.71	-4918	744.71	13776	2781.81	3.735	Si
SLV 11	4.35	-4423	-429.21	12390	2533.94	5.904	Si

Verifica a taglio nel piano secondo D.M. 17-01-18 (N.T.C.) §7.8.2.2.2 con rottura per scorrimento in combinazioni non sismiche, γM = 3

Comb.	Quota	N	V par	M	σ0	σN	l'	fvd	Vt scorr.	Vt fess.diag.	Vt,lim	c.s.	Verifica
SLU 84	2.71	-17762	-238	97.65		49753	1.275	10833	3867			16.26	Si
SLU 84	4.35	-14695	-223	195.63		41162	1.275	10833	3867			17.32	Si
SLU 42	2.71	-14712	-259	81.08		41210	1.275	10833	3867			14.92	Si
SLU 42	4.35	-12209	-245	193.43		34199	1.275	10115	3611			14.74	Si
SLU 82	2.71	-17542	-229	93.09		49136	1.275	10833	3867			16.87	Si
SLU 82	4.35	-14488	-215	187.32		40584	1.275	10833	3867			18.01	Si
SLU 40	2.71	-14492	-251	76.52		40594	1.275	10833	3867			15.44	Si
SLU 40	4.35	-12002	-236	185.12		33620	1.275	10038	3584			15.16	Si
SLU 39	2.71	-14462	-250	76.92		40509	1.275	10833	3867			15.49	Si
SLU 39	4.35	-11972	-221	178.24		33536	1.275	10027	3580			16.21	Si
SLU 83	2.71	-17732	-237	98.05		49668	1.275	10833	3867			16.31	Si
SLU 83	4.35	-14665	-208	188.75		41078	1.275	10833	3867			18.63	Si
SLU 34	2.71	-14159	-213	83.65		39662	1.275	10833	3867			18.12	Si
SLU 34	4.35	-11740	-215	177.49		32886	1.275	9940	3549			16.54	Si
SLU 36	2.71	-14420	-228	92.04		40392	1.275	10833	3867			16.99	Si
SLU 36	4.35	-11982	-218	187.26		33562	1.275	10030	3581			16.44	Si
SLU 41	2.71	-14682	-258	81.48		41126	1.275	10833	3867			14.97	Si
SLU 41	4.35	-12179	-229	186.55		34115	1.275	10104	3607			15.73	Si
SLU 38	2.71	-14360	-222	88.48		40223	1.275	10833	3867			17.46	Si
SLU 38	4.35	-11927	-213	181.22		33408	1.275	10010	3574			16.8	Si

Verifica a taglio nel piano secondo D.M. 17-01-18 (N.T.C.) §7.8.2.2.2 con rottura per scorrimento in combinazioni sismiche, γM = 2

Comb.	Quota	N	V par	M	σ0	σN	l'	fvd	Vt scorr.	Vt fess.diag.	Vt,lim	c.s.	Verifica
SLV 7	2.71	-4564	2540	472.62		12786	1.275	10890	3888			1.53	Si
SLV 7	4.35	-3897	2060	87.95		10917	1.275	10517	3754			1.82	Si
SLV 6	2.71	-19359	-3862	-596.49		54228	1.275	16250	5801			1.5	Si
SLV 6	4.35	-15543	-3587	607.92		43538	1.275	16250	5801			1.62	Si
SLV 15	2.71	-10509	2856	687.96		29437	1.275	14221	5077			1.78	Si
SLV 15	4.35	-9113	3135	-850.57		25527	1.275	13439	4798			1.53	Si
SLV 16	2.71	-10509	2856	687.96		29437	1.275	14221	5077			1.78	Si
SLV 16	4.35	-9113	3135	-850.57		25527	1.275	13439	4798			1.53	Si
SLV 5	2.71	-19359	-3862	-596.49		54228	1.275	16250	5801			1.5	Si
SLV 5	4.35	-15543	-3587	607.92		43538	1.275	16250	5801			1.62	Si
SLV 12	2.71	-4918	3720	744.71		13776	1.275	11089	3959			1.06	Si
SLV 12	4.35	-4423	3468	-429.21		12390	1.275	10811	3860			1.11	Si
SLV 11	2.71	-4918	3720	744.71		13776	1.275	11089	3959			1.06	Si
SLV 11	4.35	-4423	3468	-429.21		12390	1.275	10811	3860			1.11	Si
SLV 2	2.71	-13768	-2998	-539.74		38567	1.275	16047	5729			1.91	Si
SLV 2	4.35	-10853	-3254	1029.28		30401	1.275	14414	5146			1.58	Si
SLV 1	2.71	-13768	-2998	-539.74		38567	1.275	16047	5729			1.91	Si
SLV 1	4.35	-10853	-3254	1029.28		30401	1.275	14414	5146			1.58	Si
SLV 8	2.71	-4564	2540	472.62		12786	1.275	10890	3888			1.53	Si
SLV 8	4.35	-3897	2060	87.95		10917	1.275	10517	3754			1.82	Si

Verifica a pressoflessione fuori piano D.M. 17-01-18 (N.T.C.)

quota 3.53 Wa 0.05 denominatore 8 γM = 2

Comb.	fd	Sa	σ0	N	M	Mc	Coeff.s.	Verifica
SLV 8	143750	0.32	11218	-4005	24.14	509.21	21.1	Si
SLV 7	143750	0.32	11218	-4005	24.14	509.21	21.1	Si
SLV 12	143750	0.32	13799	-4926	24.14	611.8	25.35	Si
SLV 11	143750	0.32	13799	-4926	24.14	611.8	25.35	Si
SLV 4	143750	0.32	20680	-7383	24.14	858.66	35.58	Si
SLV 3	143750	0.32	20680	-7383	24.14	858.66	35.58	Si
SLV 16	143750	0.32	29283	-10454	24.14	1112.81	46.11	Si
SLV 15	143750	0.32	29283	-10454	24.14	1112.81	46.11	Si
SLV 1	143750	0.32	31371	-11199	24.14	1165.37	48.28	Si
SLV 2	143750	0.32	31371	-11199	24.14	1165.37	48.28	Si

Verifica dei meccanismi locali di collasso con analisi cinematica lineare

forza di aggancio al piano = 0 quota mezzeria = 3.53 Wa = 0.05 Ta = 0.016

Comb.	N top	N base	V orto	α0	M*	e*	a0*	aLim	Verifica
SLV 13	-12607	-14947	11	0.088	1366.2	0.981	1.3025	3.66656	No
SLV 14	-12607	-14947	11	0.088	1366.2	0.981	1.3025	3.66656	No
SLV 2	-10853	-13768	-8	0.089	1187.5	0.978	1.31615	3.66656	No
SLV 1	-10853	-13768	-8	0.089	1187.5	0.978	1.31615	3.66656	No
SLV 9	-16069	-19713	6	0.088	1719	0.985	1.29403	3.58056	No
SLV 10	-16069	-19713	6	0.088	1719	0.985	1.29403	3.58056	No
SLV 16	-9113	-10509	10	0.089	1010.3	0.975	1.32724	3.66656	No
SLV 15	-9113	-10509	10	0.089	1010.3	0.975	1.32724	3.66656	No
SLV 6	-15543	-19359	1	0.088	1665.4	0.984	1.30114	3.58056	No
SLV 5	-15543	-19359	1	0.088	1665.4	0.984	1.30114	3.58056	No

Tabella dei coefficienti di sicurezza minimi

Stato limite	Coeff.s.	Comb.	Verifica
PF_SLU	23.345	SLU 42	Si
V_SLU	14.739	SLU 42	Si
PF_SLV	3.735	SLV 11	Si

Stato limite	Coeff.s.	Comb.	Verifica
V_SLV	1.064	SLV 11	Si
PFFP_SLV	21.097	SLV 7	Si
R_SLV	0.355	SLV 13	No

Maschio 90

Verifiche condotte secondo D.M. 17-01-18 (N.T.C.)

Dati geometrici

X ini.	Y ini.	X fin.	Y fin.	Quota i.	Quota.s	l	Sp.	h netta	h ini.	h fin.	a	a.s.,sx	a.s.,dx
-11.003	-3.509	-11.003	-3.314	L3	L4	0.195	0.28	3.68	3.68	3.68			

Caratteristiche del materiale

(Circolare 7 21-01-19 C8.5.I) Muratura in mattoni pieni e malta di calce LC2_Corti

fb	fk	fvk0	fmedio	τ0	fv0	μ	ϕ	fv,lim	E	G	FC
600000			345000	9000	20000	0.58	0.77	32500	320000000	128000000	1.2

Verifica a pressoflessione nel piano secondo D.M. 17-01-18 NTC §7.8.2.2.1 in combinazioni non sismiche, γM = 3

Comb.	Quota	N	M	σ0	Mu	c.s.	Verifica
SLU 1	0.67	-1136	-98.03	20810	82.48	0.841	No, M>Mu
SLU 1	4.35	-728	-80.93	0	0	0	No, e>l/2
SLU 54	0.67	-1612	-141.07	29521	100.2	0.71	No, M>Mu
SLU 54	4.35	-1045	-117.34	0	0	0	No, e>l/2
SLU 59	0.67	-1626	-142.51	29771	100.56	0.706	No, M>Mu
SLU 59	4.35	-1057	-118.38	0	0	0	No, e>l/2
SLU 53	0.67	-1612	-138.44	29525	100.21	0.724	No, M>Mu
SLU 53	4.35	-1042	-117.08	0	0	0	No, e>l/2
SLU 56	0.67	-1633	-140.6	29914	100.77	0.717	No, M>Mu
SLU 56	4.35	-1060	-118.58	0	0	0	No, e>l/2
SLU 55	0.67	-1604	-142.11	29379	99.99	0.704	No, M>Mu
SLU 55	4.35	-1042	-117.05	0	0	0	No, e>l/2
SLU 60	0.67	-1647	-140.37	30159	101.11	0.72	No, M>Mu
SLU 60	4.35	-1062	-121.13	0	0	0	No, e>l/2
SLU 57	0.67	-1633	-143.23	29910	100.76	0.703	No, M>Mu
SLU 57	4.35	-1063	-118.84	0	0	0	No, e>l/2
SLU 61	0.67	-1646	-143	30154	101.1	0.707	No, M>Mu
SLU 61	4.35	-1065	-121.39	0	0	0	No, e>l/2
SLU 58	0.67	-1626	-139.88	29776	100.57	0.719	No, M>Mu
SLU 58	4.35	-1054	-118.12	0	0	0	No, e>l/2

Verifica a pressoflessione nel piano secondo D.M. 17-01-18 NTC §7.8.2.2.1 in combinazioni sismiche, γM = 2

Comb.	Quota	N	M	σ0	Mu	c.s.	Verifica
SLV 1	0.67	-1921	-154.79	35189	133.38	0.862	No, M>Mu
SLV 1	4.35	-849	-84.3	0	0	0	No, e>l/2
SLV 3	0.67	-1647	-44.27	30167	120.94	2.732	Si
SLV 3	4.35	-787	-148.73	0	0	0	No, e>l/2
SLV 4	0.67	-1647	-44.27	30167	120.94	2.732	Si
SLV 4	4.35	-787	-148.73	0	0	0	No, e>l/2
SLV 2	0.67	-1921	-154.79	35189	133.38	0.862	No, M>Mu
SLV 2	4.35	-849	-84.3	0	0	0	No, e>l/2
SLV 6	0.67	-1841	-286.73	0	0	0	No, e>l/2
SLV 6	4.35	-896	10.58	16406	75.61	7.146	Si
SLV 8	0.67	-927	81.69	16986	77.86	0.953	No, M>Mu
SLV 8	4.35	-690	-204.2	0	0	0	No, e>l/2
SLV 10	0.67	-1499	-289.29	0	0	0	No, e>l/2
SLV 10	4.35	-875	27.47	16018	74.09	2.697	Si
SLV 5	0.67	-1841	-286.73	0	0	0	No, e>l/2
SLV 5	4.35	-896	10.58	16406	75.61	7.146	Si
SLV 7	0.67	-927	81.69	16986	77.86	0.953	No, M>Mu
SLV 7	4.35	-690	-204.2	0	0	0	No, e>l/2
SLV 9	0.67	-1499	-289.29	0	0	0	No, e>l/2
SLV 9	4.35	-875	27.47	16018	74.09	2.697	Si

Verifica a taglio nel piano secondo D.M. 17-01-18 (N.T.C.) §7.8.2.2.2 con rottura per scorrimento in combinazioni non sismiche, γM = 3

Comb.	Quota	N	V par	M	σ0	σN	l'	fvd	Vt scorr.	Vt fess.diag.	Vt,lim	c.s.	Verifica
SLU 56	0.67	-1633	-10	-140.6		170299	0.0343	10833	104			10.58	Si
SLU 56	4.35	-1060	-2	-118.58		0	0	5556	0			0	No, Vu<V
SLU 58	0.67	-1626	-10	-139.88		168872	0.0344	10833	104			10.83	Si
SLU 58	4.35	-1054	-2	-118.12		0	0	5556	0			0	No, Vu<V
SLU 54	0.67	-1612	-17	-141.07		192353	0.0299	10833	91			5.27	Si
SLU 54	4.35	-1045	-2	-117.34		0	0	5556	0			0	No, Vu<V
SLU 55	0.67	-1604	-22	-142.11		214332	0.0267	10833	81			3.62	Si
SLU 55	4.35	-1042	-2	-117.05		0	0	5556	0			0	No, Vu<V
SLU 61	0.67	-1646	-16	-143		184187	0.0319	10833	97			6.03	Si
SLU 61	4.35	-1065	0	-121.39		0	0	5556	0			0	No, Vu<V
SLU 59	0.67	-1626	-18	-142.51		196888	0.0295	10833	89			5.05	Si
SLU 59	4.35	-1057	-3	-118.38		0	0	5556	0			0	No, Vu<V
SLU 53	0.67	-1612	-9	-138.44		165133	0.0349	10833	106			11.58	Si
SLU 53	4.35	-1042	-1	-117.08		0	0	5556	0			0	No, Vu<V
SLU 57	0.67	-1633	-18	-143.23		198524	0.0294	10833	89			4.98	Si
SLU 57	4.35	-1063	-3	-118.84		0	0	5556	0			0	No, Vu<V
SLU 1	0.67	-1136	-7	-98.03		120490	0.0337	10833	102			15.36	Si
SLU 1	4.35	-728	-2	-80.93		0	0	5556	0			0	No, Vu<V
SLU 60	0.67	-1647	-8	-140.37		159987	0.0368	10833	112			13.99	Si
SLU 60	4.35	-1062	1	-121.13		0	0	5556	0			0	No, Vu<V

Verifica a taglio nel piano secondo D.M. 17-01-18 (N.T.C.) §7.8.2.2.2 con rottura per scorrimento in combinazioni sismiche, γM = 2

Comb.	Quota	N	V par	M	σ0	σN	l'	fvd	Vt scorr.	Vt fess.diag.	Vt,lim	c.s.	Verifica
SLV 10	0.67	-1499	-187	-289.29		0	0	8333	0			0	No, Vu<V
SLV 10	4.35	-875	-266	27.47		16018	0.195	11537	630			2.37	Si
SLV 9	0.67	-1499	-187	-289.29		0	0	8333	0			0	No, Vu<V
SLV 9	4.35	-875	-266	27.47		16018	0.195	11537	630			2.37	Si
SLV 5	0.67	-1841	-510	-286.73		0	0	8333	0			0	No, Vu<V
SLV 5	4.35	-896	-296	10.58		16406	0.195	11615	634			2.14	Si
SLV 1	0.67	-1921	-648	-154.79		135070	0.0508	16250	231			0.36	No, Vu<V
SLV 1	4.35	-849	-134	-84.3		0	0	8333	0			0	No, Vu<V
SLV 4	0.67	-1647	-443	-44.27		30167	0.195	14367	784			1.77	Si
SLV 4	4.35	-787	34	-148.73		0	0	8333	0			0	No, Vu<V
SLV 7	0.67	-927	174	81.69		117186	0.0283	16250	129			0.74	No, Vu<V
SLV 7	4.35	-690	265	-204.2		0	0	8333	0			0	No, Vu<V
SLV 2	0.67	-1921	-648	-154.79		135070	0.0508	16250	231			0.36	No, Vu<V
SLV 2	4.35	-849	-134	-84.3		0	0	8333	0			0	No, Vu<V
SLV 3	0.67	-1647	-443	-44.27		30167	0.195	14367	784			1.77	Si
SLV 3	4.35	-787	34	-148.73		0	0	8333	0			0	No, Vu<V
SLV 8	0.67	-927	174	81.69		117186	0.0283	16250	129			0.74	No, Vu<V
SLV 8	4.35	-690	265	-204.2		0	0	8333	0			0	No, Vu<V
SLV 6	0.67	-1841	-510	-286.73		0	0	8333	0			0	No, Vu<V
SLV 6	4.35	-896	-296	10.58		16406	0.195	11615	634			2.14	Si

Verifica a pressoflessione fuori piano D.M. 17-01-18 (N.T.C.)

quota 2.51 Wa 0.05 denominatore 8 γM = 2

Comb.	fd	Sa	σ0	N	M	Mc	Coeff.s.	Verifica
SLV 7	143750	0.3	28557	-1559	17.32	167.27	9.66	Si
SLV 8	143750	0.3	28557	-1559	17.32	167.27	9.66	Si
SLV 12	143750	0.3	29936	-1634	17.32	172.77	9.98	Si
SLV 11	143750	0.3	29936	-1634	17.32	172.77	9.98	Si
SLV 4	143750	0.3	31733	-1733	17.32	179.57	10.37	Si
SLV 3	143750	0.3	31733	-1733	17.32	179.57	10.37	Si
SLV 1	143750	0.3	35833	-1956	17.32	193.58	11.18	Si
SLV 2	143750	0.3	35833	-1956	17.32	193.58	11.18	Si
SLV 15	143750	0.3	36328	-1984	17.32	195.13	11.27	Si
SLV 16	143750	0.3	36328	-1984	17.32	195.13	11.27	Si

Verifica dei meccanismi locali di collasso con analisi cinematica lineare

forza di aggancio al piano = 0 quota mezzeria = 2.51 Wa = 0.05 Ta = 0.0808

Comb.	N top	N base	V orto	α0	M*	e*	a0*	aLim	Verifica
SLV 11	-669	-585	-34	0.006	97	0.923	0.08874	9.1791	No
SLV 12	-669	-585	-34	0.006	97	0.923	0.08874	9.1791	No
SLV 6	-896	-1841	34	0.013	119.8	0.935	0.20704	9.1791	No
SLV 5	-896	-1841	34	0.013	119.8	0.935	0.20704	9.1791	No
SLV 16	-716	-505	-25	0.018	101.7	0.926	0.2867	10.39734	No
SLV 15	-716	-505	-25	0.018	101.7	0.926	0.2867	10.39734	No
SLV 8	-690	-927	-25	0.017	99.1	0.924	0.26737	9.1791	No
SLV 7	-690	-927	-25	0.017	99.1	0.924	0.26737	9.1791	No
SLV 2	-849	-1921	24	0.022	115	0.932	0.33823	10.39734	No
SLV 1	-849	-1921	24	0.022	115	0.932	0.33823	10.39734	No

Tabella dei coefficienti di sicurezza minimi

Stato limite	Coeff.s.	Comb.	Verifica
PF_SLU	0	SLU 1	No
V_SLU	0	SLU 1	No
PF_SLV	0	SLV 1	No
V_SLV	0	SLV 1	No
PFFP_SLV	9.659	SLV 7	Si
R_SLV	0.01	SLV 11	No

Maschio 91

Verifiche condotte secondo D.M. 17-01-18 (N.T.C.)

Dati geometrici

X ini.	Y ini.	X fin.	Y fin.	Quota i.	Quota.s	l	Sp.	h netta	h ini.	h fin.	a	a.s.,sx	a.s.,dx
-11.003	-3.314	-11.003	-0.354	L3	Z medio 353 cm	2.96	0.28	2.86	2.04	3.68			

Caratteristiche del materiale

(Circolare 7 21-01-19 C8.5.I) Muratura in mattoni pieni e malta di calce LC2_Corti

fb	fk	fvk0	fmedio	τ0	fv0	μ	ϕ	fv,lim	E	G	FC
600000			345000	9000	20000	0.58	0.77	32500	320000000	128000000	1.2

Verifica a pressoflessione nel piano secondo D.M. 17-01-18 NTC §7.8.2.2.1 in combinazioni non sismiche, γM = 3

Comb.	Quota	N	M	σ0	Mu	c.s.	Verifica
SLU 84	0.67	-44386	-1999.96	53555	22502.59	11.251	Si
SLU 84	2.71	-46697	-3830.2	56343	21308.4	5.563	Si
SLU 83	0.67	-44451	-1952.28	53634	22472.03	11.511	Si
SLU 83	2.71	-46753	-3764.99	56410	21276.74	5.651	Si
SLU 73	0.67	-42026	-2021.04	50707	23480.52	11.618	Si
SLU 73	2.71	-43999	-3730.24	53088	22679.74	6.08	Si
SLU 76	0.67	-42623	-2020.68	51428	23256.05	11.509	Si
SLU 76	2.71	-44715	-3725.05	53952	22346.8	5.999	Si
SLU 80	0.67	-43264	-1988.53	52201	22997.8	11.565	Si
SLU 80	2.71	-45469	-3676.39	54861	21972.34	5.977	Si
SLU 78	0.67	-43536	-1966.18	52529	22882.94	11.638	Si

Comb.	Quota	N	M	σ0	Mu	c.s.	Verifica
SLU 78	2.71	-45787	-3642.46	55245	21806.65	5.987	Si
SLU 79	0.67	-43330	-1940.84	52280	22970.46	11.835	Si
SLU 79	2.71	-45524	-3611.19	54928	21943.68	6.077	Si
SLU 81	0.67	-43854	-1952.64	52913	22744.4	11.648	Si
SLU 81	2.71	-46037	-3770.18	55546	21673.68	5.749	Si
SLU 75	0.67	-42938	-1966.54	51808	23131.32	11.762	Si
SLU 75	2.71	-45071	-3647.65	54381	22173.25	6.079	Si
SLU 82	0.67	-43789	-2000.32	52834	22773.24	11.385	Si
SLU 82	2.71	-45981	-3835.39	55479	21703.58	5.659	Si

Verifica a pressoflessione nel piano secondo D.M. 17-01-18 NTC §7.8.2.2.1 in combinazioni sismiche, γM = 2

Comb.	Quota	N	M	σ0	Mu	c.s.	Verifica
SLV 16	0.67	-19362	1216.2	23362	23177.32	19.057	Si
SLV 16	2.71	-23025	-3851.59	27782	26329.41	6.836	Si
SLV 10	0.67	-29723	-7446.42	35863	31078.76	4.174	Si
SLV 10	2.71	-32748	-6597.34	39512	32793.79	4.971	Si
SLV 6	0.67	-35408	-7953.89	42722	34080.97	4.285	Si
SLV 6	2.71	-36762	-5251.13	44355	34656.83	6.6	Si
SLV 11	0.67	-23987	4969.83	28941	27091.49	5.451	Si
SLV 11	2.71	-24995	43.17	30158	27861.94	645.44	Si
SLV 14	0.67	-21083	-2508.68	25439	24707.11	9.849	Si
SLV 14	2.71	-25351	-5843.74	30588	28127.32	4.813	Si
SLV 15	0.67	-19362	1216.2	23362	23177.32	19.057	Si
SLV 15	2.71	-23025	-3851.59	27782	26329.41	6.836	Si
SLV 12	0.67	-23987	4969.83	28941	27091.49	5.451	Si
SLV 12	2.71	-24995	43.17	30158	27861.94	645.44	Si
SLV 9	0.67	-29723	-7446.42	35863	31078.76	4.174	Si
SLV 9	2.71	-32748	-6597.34	39512	32793.79	4.971	Si
SLV 13	0.67	-21083	-2508.68	25439	24707.11	9.849	Si
SLV 13	2.71	-25351	-5843.74	30588	28127.32	4.813	Si
SLV 5	0.67	-35408	-7953.89	42722	34080.97	4.285	Si
SLV 5	2.71	-36762	-5251.13	44355	34656.83	6.6	Si

Verifica a taglio nel piano secondo D.M. 17-01-18 (N.T.C.) §7.8.2.2.2 con rottura per scorrimento in combinazioni non sismiche, γM = 3

Comb.	Quota	N	V par	M	σ0	σN	I'	fvd	Vt scorr.	Vt fess.diag.	Vt,lim	c.s.	Verifica
SLU 82	0.67	-43789	829	-2000.32		52834	2.96	10833	8979			10.83	Si
SLU 82	2.71	-45981	565	-3835.39		55479	2.96	10833	8979			15.89	Si
SLU 76	0.67	-42623	775	-2020.68		51428	2.96	10833	8979			11.59	Si
SLU 76	2.71	-44715	462	-3725.05		53952	2.96	10833	8979			19.43	Si
SLU 74	0.67	-43004	758	-1918.86		51887	2.96	10833	8979			11.84	Si
SLU 74	2.71	-45126	494	-3582.45		54448	2.96	10833	8979			18.16	Si
SLU 84	0.67	-44386	828	-1999.96		53555	2.96	10833	8979			10.84	Si
SLU 84	2.71	-46697	562	-3830.2		56343	2.96	10833	8979			15.98	Si
SLU 75	0.67	-42938	769	-1966.54		51808	2.96	10833	8979			11.68	Si
SLU 75	2.71	-45071	476	-3647.65		54381	2.96	10833	8979			18.87	Si
SLU 81	0.67	-43854	818	-1952.64		52913	2.96	10833	8979			10.97	Si
SLU 81	2.71	-46037	583	-3770.18		55546	2.96	10833	8979			15.39	Si
SLU 78	0.67	-43536	768	-1966.18		52529	2.96	10833	8979			11.69	Si
SLU 78	2.71	-45787	473	-3642.46		55245	2.96	10833	8979			18.99	Si
SLU 73	0.67	-42026	776	-2021.04		50707	2.96	10833	8979			11.57	Si
SLU 73	2.71	-43999	465	-3730.24		53088	2.96	10833	8979			19.3	Si
SLU 80	0.67	-43264	767	-1988.53		52201	2.96	10833	8979			11.7	Si
SLU 80	2.71	-45469	471	-3676.39		54861	2.96	10833	8979			19.05	Si
SLU 83	0.67	-44451	817	-1952.28		53634	2.96	10833	8979			10.98	Si
SLU 83	2.71	-46753	580	-3764.99		56410	2.96	10833	8979			15.47	Si

Verifica a taglio nel piano secondo D.M. 17-01-18 (N.T.C.) §7.8.2.2.2 con rottura per scorrimento in combinazioni sismiche, γM = 2

Comb.	Quota	N	V par	M	σ0	σN	I'	fvd	Vt scorr.	Vt fess.diag.	Vt,lim	c.s.	Verifica
SLV 9	0.67	-29723	-12598	-7446.42		35863	2.96	15506	12851			1.02	Si
SLV 9	2.71	-32748	-13287	-6597.34		39512	2.96	16236	13456			1.01	Si
SLV 7	0.67	-29671	13575	4462.36		35800	2.96	15493	12841			0.95	No, Vu<V
SLV 7	2.71	-29009	13784	1389.38		35001	2.96	15334	12708			0.92	No, Vu<V
SLV 10	0.67	-29723	-12598	-7446.42		35863	2.96	15506	12851			1.02	Si
SLV 10	2.71	-32748	-13287	-6597.34		39512	2.96	16236	13456			1.01	Si
SLV 13	0.67	-21083	-3516	-2508.68		25439	2.96	13421	11123			3.16	Si
SLV 13	2.71	-25351	-6029	-5843.74		30588	2.96	14451	11977			1.99	Si
SLV 8	0.67	-29671	13575	4462.36		35800	2.96	15493	12841			0.95	No, Vu<V
SLV 8	2.71	-29009	13784	1389.38		35001	2.96	15334	12708			0.92	No, Vu<V
SLV 11	0.67	-23987	13523	4969.83		28941	2.96	14122	11704			0.87	No, Vu<V
SLV 11	2.71	-24995	12322	43.17		30158	2.96	14365	11906			0.97	No, Vu<V
SLV 6	0.67	-35408	-12546	-7953.89		42722	2.96	16250	13468			1.07	Si
SLV 6	2.71	-36762	-11825	-5251.13		44355	2.96	16250	13468			1.14	Si
SLV 5	0.67	-35408	-12546	-7953.89		42722	2.96	16250	13468			1.07	Si
SLV 5	2.71	-36762	-11825	-5251.13		44355	2.96	16250	13468			1.14	Si
SLV 14	0.67	-21083	-3516	-2508.68		25439	2.96	13421	11123			3.16	Si
SLV 14	2.71	-25351	-6029	-5843.74		30588	2.96	14451	11977			1.99	Si
SLV 12	0.67	-23987	13523	4969.83		28941	2.96	14122	11704			0.87	No, Vu<V
SLV 12	2.71	-24995	12322	43.17		30158	2.96	14365	11906			0.97	No, Vu<V

Verifica a pressoflessione fuori piano D.M. 17-01-18 (N.T.C.)

quota 1.69 Wa 0.05 denominatore 8 γM = 2

Comb.	fd	Sa	σ0	N	M	Mc	Coeff.s.	Verifica
SLV 15	143750	0.28	29726	-24637	149.42	2610.06	17.47	Si
SLV 16	143750	0.28	29726	-24637	149.42	2610.06	17.47	Si
SLV 11	143750	0.28	32514	-26948	149.42	2768.78	18.53	Si
SLV 12	143750	0.28	32514	-26948	149.42	2768.78	18.53	Si
SLV 13	143750	0.28	32935	-27296	149.42	2791.43	18.68	Si
SLV 14	143750	0.28	32935	-27296	149.42	2791.43	18.68	Si
SLV 7	143750	0.28	38113	-31588	149.42	3042.89	20.37	Si
SLV 8	143750	0.28	38113	-31588	149.42	3042.89	20.37	Si

Comb.	fd	Sa	σ0	N	M	Mc	Coeff.s.	Verifica
SLV 9	143750	0.28	43209	-35812	149.42	3240.67	21.69	Si
SLV 10	143750	0.28	43209	-35812	149.42	3240.67	21.69	Si

Verifica dei meccanismi locali di collasso con analisi cinematica lineare

forza di aggancio al piano = 0 quota mezzeria = 1.69 Wa = 0.05 Ta = 0.0488

Comb.	N top	N base	V orto	α0	M*	e*	a0*	aLim	Verifica
SLV 1	-38731	-40032	-218	0.046	4277.2	0.976	0.68756	5.75693	No
SLV 2	-38731	-40032	-218	0.046	4277.2	0.976	0.68756	5.75693	No
SLV 15	-23025	-19362	154	0.047	2678.2	0.963	0.70909	5.75693	No
SLV 16	-23025	-19362	154	0.047	2678.2	0.963	0.70909	5.75693	No
SLV 3	-36405	-38311	-123	0.048	4040.3	0.975	0.72281	5.75693	No
SLV 4	-36405	-38311	-123	0.048	4040.3	0.975	0.72281	5.75693	No
SLV 6	-36762	-35408	-232	0.046	4076.6	0.975	0.68092	5.30273	No
SLV 5	-36762	-35408	-232	0.046	4076.6	0.975	0.68092	5.30273	No
SLV 14	-25351	-21083	59	0.051	2914.8	0.965	0.76167	5.75693	No
SLV 13	-25351	-21083	59	0.051	2914.8	0.965	0.76167	5.75693	No

Tabella dei coefficienti di sicurezza minimi

Stato limite	Coeff.s.	Comb.	Verifica
PF_SLU	5.563	SLU 84	Si
V_SLU	10.833	SLU 82	Si
PF_SLV	4.174	SLV 9	Si
V_SLV	0.865	SLV 11	No
PFFP_SLV	17.468	SLV 15	Si
R_SLV	0.119	SLV 1	No

Maschio 93

Verifiche condotte secondo D.M. 17-01-18 (N.T.C.)

Dati geometrici

X ini.	Y ini.	X fin.	Y fin.	Quota i.	Quota.s	l	Sp.	h netta	h ini.	h fin.	a	a.s.,sx	a.s.,dx
-11.003	-0.354	-11.003	1.046	L3	L4	1.4	0.28	3.68	3.68	3.68			

Caratteristiche del materiale

(Circolare 7 21-01-19 C8.5.I) Muratura in mattoni pieni e malta di calce LC2_Corti

fb	fk	fvk0	fmedio	τ0	fv0	μ	ϕ	fv,lim	E	G	FC
600000			345000	9000	20000	0.58	0.77	32500	320000000	128000000	1.2

Verifica a pressoflessione nel piano secondo D.M. 17-01-18 NTC §7.8.2.2.1 in combinazioni non sismiche, γM = 3

Comb.	Quota	N	M	σ0	Mu	c.s.	Verifica
SLU 78	0.67	-22918	1758.89	58464	4528.56	2.575	Si
SLU 78	4.35	-18962	1271.55	48373	5391.25	4.24	Si
SLU 81	0.67	-23160	1766.64	59083	4453.37	2.521	Si
SLU 81	4.35	-18974	1274.04	48403	5389.71	4.23	Si
SLU 80	0.67	-22705	1735.59	57921	4592.42	2.646	Si
SLU 80	4.35	-18742	1252.54	47812	5419.07	4.326	Si
SLU 74	0.67	-22684	1737.68	57867	4598.69	2.646	Si
SLU 74	4.35	-18677	1259.78	47646	5426.92	4.308	Si
SLU 82	0.67	-23022	1749.47	58729	4496.65	2.57	Si
SLU 82	4.35	-18858	1259.38	48106	5404.77	4.292	Si
SLU 84	0.67	-23394	1787.85	59680	4378.35	2.449	Si
SLU 84	4.35	-19259	1285.81	49130	5350.33	4.161	Si
SLU 77	0.67	-23057	1776.06	58817	4485.91	2.526	Si
SLU 77	4.35	-19079	1286.21	48670	5375.65	4.179	Si
SLU 83	0.67	-23533	1805.02	60033	4332.81	2.4	Si
SLU 83	4.35	-19376	1300.47	49427	5333.21	4.101	Si
SLU 75	0.67	-22545	1720.51	57514	4639.07	2.696	Si
SLU 75	4.35	-18561	1245.12	47349	5440.47	4.369	Si
SLU 79	0.67	-22844	1752.76	58275	4551.07	2.597	Si
SLU 79	4.35	-18859	1267.2	48109	5404.6	4.265	Si

Verifica a pressoflessione nel piano secondo D.M. 17-01-18 NTC §7.8.2.2.1 in combinazioni sismiche, γM = 2

Comb.	Quota	N	M	σ0	Mu	c.s.	Verifica
SLV 9	0.67	-6653	-1358.44	16971	4010.03	2.952	Si
SLV 9	4.35	-8313	1210.89	21205	4808.96	3.971	Si
SLV 5	0.67	-11875	-1254.28	30294	6251.8	4.984	Si
SLV 5	4.35	-11478	1695.46	29281	6109.37	3.603	Si
SLV 7	0.67	-23949	3644.48	61094	8382.12	2.3	Si
SLV 7	4.35	-16531	444.43	42170	7577.88	17.051	Si
SLV 11	0.67	-18726	3540.32	47771	7983.48	2.255	Si
SLV 11	4.35	-13365	-40.14	34094	6744.98	168.053	Si
SLV 12	0.67	-18726	3540.32	47771	7983.48	2.255	Si
SLV 12	4.35	-13365	-40.14	34094	6744.98	168.053	Si
SLV 6	0.67	-11875	-1254.28	30294	6251.8	4.984	Si
SLV 6	4.35	-11478	1695.46	29281	6109.37	3.603	Si
SLV 16	0.67	-8407	1704.24	21447	4852.03	2.847	Si
SLV 16	4.35	-7903	-167.61	20161	4619.37	27.56	Si
SLV 15	0.67	-8407	1704.24	21447	4852.03	2.847	Si
SLV 15	4.35	-7903	-167.61	20161	4619.37	27.56	Si
SLV 10	0.67	-6653	-1358.44	16971	4010.03	2.952	Si
SLV 10	4.35	-8313	1210.89	21205	4808.96	3.971	Si
SLV 8	0.67	-23949	3644.48	61094	8382.12	2.3	Si
SLV 8	4.35	-16531	444.43	42170	7577.88	17.051	Si

Verifica a taglio nel piano secondo D.M. 17-01-18 (N.T.C.) §7.8.2.2.2 con rottura per scorrimento in combinazioni non sismiche, γM = 3

Comb.	Quota	N	V par	M	σ0	σN	I'	fvd	Vt scorr.	Vt fess.diag.	Vt,lim	c.s.	Verifica
SLU 74	0.67	-22684	1056	1737.68		57867	1.4	10833	4247			4.02	Si
SLU 74	4.35	-18677	-131	1259.78		47646	1.4	10833	4247			32.47	Si
SLU 81	0.67	-23160	1036	1766.64		59083	1.4	10833	4247			4.1	Si
SLU 81	4.35	-18974	-169	1274.04		48403	1.4	10833	4247			25.1	Si
SLU 80	0.67	-22705	1076	1735.59		57921	1.4	10833	4247			3.95	Si
SLU 80	4.35	-18742	-116	1252.54		47812	1.4	10833	4247			36.48	Si
SLU 78	0.67	-22918	1091	1758.89		58464	1.4	10833	4247			3.89	Si
SLU 78	4.35	-18962	-111	1271.55		48373	1.4	10833	4247			38.29	Si
SLU 84	0.67	-23394	1071	1787.85		59680	1.4	10833	4247			3.97	Si
SLU 84	4.35	-19259	-149	1285.81		49130	1.4	10833	4247			28.44	Si
SLU 77	0.67	-23057	1094	1776.06		58817	1.4	10833	4247			3.88	Si
SLU 77	4.35	-19079	-112	1286.21		48670	1.4	10833	4247			37.77	Si
SLU 83	0.67	-23533	1074	1805.02		60033	1.4	10833	4247			3.95	Si
SLU 83	4.35	-19376	-151	1300.47		49427	1.4	10833	4247			28.15	Si
SLU 75	0.67	-22545	1053	1720.51		57514	1.4	10833	4247			4.03	Si
SLU 75	4.35	-18561	-129	1245.12		47349	1.4	10833	4247			32.86	Si
SLU 76	0.67	-22240	1035	1685.77		56735	1.4	10833	4247			4.1	Si
SLU 76	4.35	-18263	-134	1216.33		46590	1.4	10833	4247			31.75	Si
SLU 79	0.67	-22844	1079	1752.76		58275	1.4	10833	4247			3.93	Si
SLU 79	4.35	-18859	-118	1267.2		48109	1.4	10833	4247			36	Si

Verifica a taglio nel piano secondo D.M. 17-01-18 (N.T.C.) §7.8.2.2.2 con rottura per scorrimento in combinazioni sismiche, γM = 2

Comb.	Quota	N	V par	M	σ0	σN	I'	fvd	Vt scorr.	Vt fess.diag.	Vt,lim	c.s.	Verifica
SLV 6	0.67	-11875	-5776	-1254.28		30294	1.4	14392	5642			0.98	No, Vu<V
SLV 6	4.35	-11478	-4999	1695.46		29281	1.4	14190	5562			1.11	Si
SLV 16	0.67	-8407	5077	1704.24		21447	1.4	12623	4948			0.97	No, Vu<V
SLV 16	4.35	-7903	3382	-167.61		20161	1.4	12365	4847			1.43	Si
SLV 8	0.67	-23949	5626	3644.48		61094	1.4	16250	6370			1.13	Si
SLV 8	4.35	-16531	3515	444.43		42170	1.4	16250	6370			1.81	Si
SLV 5	0.67	-11875	-5776	-1254.28		30294	1.4	14392	5642			0.98	No, Vu<V
SLV 5	4.35	-11478	-4999	1695.46		29281	1.4	14190	5562			1.11	Si
SLV 15	0.67	-8407	5077	1704.24		21447	1.4	12623	4948			0.97	No, Vu<V
SLV 15	4.35	-7903	3382	-167.61		20161	1.4	12365	4847			1.43	Si
SLV 10	0.67	-6653	-4188	-1358.44		16971	1.4	11727	4597			1.1	Si
SLV 10	4.35	-8313	-3685	1210.89		21205	1.4	12574	4929			1.34	Si
SLV 11	0.67	-18726	7215	3540.32		47771	1.4	16250	6370			0.88	No, Vu<V
SLV 11	4.35	-13365	4829	-40.14		34094	1.4	15152	5940			1.23	Si
SLV 9	0.67	-6653	-4188	-1358.44		16971	1.4	11727	4597			1.1	Si
SLV 9	4.35	-8313	-3685	1210.89		21205	1.4	12574	4929			1.34	Si
SLV 12	0.67	-18726	7215	3540.32		47771	1.4	16250	6370			0.88	No, Vu<V
SLV 12	4.35	-13365	4829	-40.14		34094	1.4	15152	5940			1.23	Si
SLV 7	0.67	-23949	5626	3644.48		61094	1.4	16250	6370			1.13	Si
SLV 7	4.35	-16531	3515	444.43		42170	1.4	16250	6370			1.81	Si

Verifica a pressoflessione fuori piano D.M. 17-01-18 (N.T.C.)

quota 2.51 Wa 0.05 denominatore 8 γM = 2

Comb.	fd	Sa	σ0	N	M	Mc	Coeff.s.	Verifica
SLV 13	143750	0.3	20946	-8211	124.33	952.47	7.66	Si
SLV 14	143750	0.3	20946	-8211	124.33	952.47	7.66	Si
SLV 10	143750	0.3	23034	-9029	124.33	1025.81	8.25	Si
SLV 9	143750	0.3	23034	-9029	124.33	1025.81	8.25	Si
SLV 16	143750	0.3	28153	-11036	124.33	1189.05	9.56	Si
SLV 15	143750	0.3	28153	-11036	124.33	1189.05	9.56	Si
SLV 5	143750	0.3	32030	-12556	124.33	1297.03	10.43	Si
SLV 6	143750	0.3	32030	-12556	124.33	1297.03	10.43	Si
SLV 12	143750	0.3	47056	-18446	124.33	1587.91	12.77	Si
SLV 11	143750	0.3	47056	-18446	124.33	1587.91	12.77	Si

Verifica dei meccanismi locali di collasso con analisi cinematica lineare

forza di aggancio al piano = 0 quota mezzeria = 2.51 Wa = 0.05 Ta = 0.0808

Comb.	N top	N base	V orto	α0	M*	e*	a0*	aLim	Verifica
SLV 16	-7903	-8407	-103	0.032	1009.2	0.943	0.49622	10.39734	No
SLV 15	-7903	-8407	-103	0.032	1009.2	0.943	0.49622	10.39734	No
SLV 1	-16940	-22194	94	0.036	1927.8	0.968	0.53407	10.39734	No
SLV 2	-16940	-22194	94	0.036	1927.8	0.968	0.53407	10.39734	No
SLV 13	-6387	-4785	-67	0.036	855.7	0.934	0.55648	10.39734	No
SLV 14	-6387	-4785	-67	0.036	855.7	0.934	0.55648	10.39734	No
SLV 4	-18456	-25817	58	0.038	2082.1	0.97	0.56331	10.39734	No
SLV 3	-18456	-25817	58	0.038	2082.1	0.97	0.56331	10.39734	No
SLV 12	-13365	-18726	-89	0.035	1563.9	0.961	0.53408	9.1791	No
SLV 11	-13365	-18726	-89	0.035	1563.9	0.961	0.53408	9.1791	No

Tabella dei coefficienti di sicurezza minimi

Stato limite	Coeff.s.	Comb.	Verifica
PF_SLU	2.4	SLU 83	Si
V_SLU	3.881	SLU 77	Si
PF_SLV	2.255	SLV 11	Si
V_SLV	0.883	SLV 11	No
PFFP_SLV	7.661	SLV 13	Si
R_SLV	0.048	SLV 15	No

Maschio 94

Verifiche condotte secondo D.M. 17-01-18 (N.T.C.)

Dati geometrici

X ini.	Y ini.	X fin.	Y fin.	Quota i.	Quota.s	l	Sp.	h netta	h ini.	h fin.	a	a.s.,sx	a.s.,dx
-9.746	2.215	-9.748	6.536	L3	L4	4.321	0.14	3.68	3.68	3.68			

Caratteristiche del materiale

(Circolare 7 21-01-19 C8.5.I) Muratura in mattoni pieni e malta di calce LC2_Corti

fb	fk	fvk0	fmedio	τ0	fv0	μ	ϕ	fv,lim	E	G	FC
600000			345000	9000	20000	0.58	0.77	32500	320000000	128000000	1.2

Verifica a pressoflessione nel piano secondo D.M. 17-01-18 NTC §7.8.2.2.1 in combinazioni non sismiche, γM = 3

Comb.	Quota	N	M	σ0	Mu	c.s.	Verifica
SLU 83	0.67	-46056	3676.88	76135	6502.17	1.768	Si
SLU 83	4.35	-31790	-2866.54	52552	24372.1	8.502	Si
SLU 80	0.67	-44302	4140.78	73235	9662.43	2.333	Si
SLU 80	4.35	-30511	-2344.07	50438	25102.36	10.709	Si
SLU 82	0.67	-45808	3283.71	75725	6965.25	2.121	Si
SLU 82	4.35	-31615	-3144.78	52262	24480.67	7.785	Si
SLU 79	0.67	-44299	4119.48	73231	9666.39	2.347	Si
SLU 79	4.35	-30511	-2355.96	50438	25102.41	10.655	Si
SLU 81	0.67	-45806	3262.41	75722	6969.51	2.136	Si
SLU 81	4.35	-31615	-3156.66	52262	24480.73	7.755	Si
SLU 74	0.67	-44560	3602.49	73661	9214.7	2.558	Si
SLU 74	4.35	-30807	-2795.37	50927	24946.26	8.924	Si
SLU 77	0.67	-44810	4016.95	74075	8774.72	2.184	Si
SLU 77	4.35	-30982	-2505.25	51217	24850.05	9.919	Si
SLU 84	0.67	-46059	3698.17	76139	6497.86	1.757	Si
SLU 84	4.35	-31790	-2854.66	52552	24372.04	8.538	Si
SLU 75	0.67	-44562	3623.79	73665	9210.69	2.542	Si
SLU 75	4.35	-30807	-2783.49	50927	24946.2	8.962	Si
SLU 78	0.67	-44812	4038.25	74079	8770.66	2.172	Si
SLU 78	4.35	-30983	-2493.37	51217	24850	9.966	Si

Verifica a pressoflessione nel piano secondo D.M. 17-01-18 NTC §7.8.2.2.1 in combinazioni sismiche, γM = 2

Comb.	Quota	N	M	σ0	Mu	c.s.	Verifica
SLV 11	0.67	-20167	34273.98	33338	31682.25	0.924	No, M>Mu
SLV 11	4.35	-12828	12520.89	21206	22904.68	1.829	Si
SLV 9	0.67	-51022	-35774.17	84344	34140.27	0.954	No, M>Mu
SLV 9	4.35	-36280	-21067.97	59975	39908.73	1.894	Si
SLV 7	0.67	-9681	41039.02	0	0	0	No, e>l/2
SLV 7	4.35	-5275	17340.87	0	0	0	No, e>l/2
SLV 12	0.67	-20167	34273.98	33338	31682.25	0.924	No, M>Mu
SLV 12	4.35	-12828	12520.89	21206	22904.68	1.829	Si
SLV 10	0.67	-51022	-35774.17	84344	34140.27	0.954	No, M>Mu
SLV 10	4.35	-36280	-21067.97	59975	39908.73	1.894	Si
SLV 6	0.67	-40536	-29009.13	67010	39547.79	1.363	Si
SLV 6	4.35	-28727	-16247.99	47489	37942.38	2.335	Si
SLV 8	0.67	-9681	41039.02	0	0	0	No, e>l/2
SLV 8	4.35	-5275	17340.87	0	0	0	No, e>l/2
SLV 3	0.67	-8247	24414.73	0	0	0	No, e>l/2
SLV 3	4.35	-4672	11208.09	0	0	0	No, e>l/2
SLV 4	0.67	-8247	24414.73	0	0	0	No, e>l/2
SLV 4	4.35	-4672	11208.09	0	0	0	No, e>l/2
SLV 5	0.67	-40536	-29009.13	67010	39547.79	1.363	Si
SLV 5	4.35	-28727	-16247.99	47489	37942.38	2.335	Si

Verifica a taglio nel piano secondo D.M. 17-01-18 (N.T.C.) §7.8.2.2.2 con rottura per scorrimento in combinazioni non sismiche, γM = 3

Comb.	Quota	N	V par	M	σ0	σN	l'	fvd	Vt scorr.	Vt fess.diag.	Vt,lim	c.s.	Verifica
SLU 78	0.67	-44812	1022	4038.25		74079	4.3209	10833	6553			6.41	Si
SLU 78	4.35	-30983	-35	-2493.37		51217	4.3209	10833	6553			187.02	Si
SLU 84	0.67	-46059	1062	3698.17		76139	4.3209	10833	6553			6.17	Si
SLU 84	4.35	-31790	-13	-2854.66		52552	4.3209	10833	6553			506.91	Si
SLU 73	0.67	-43803	1022	3326.05		72410	4.3209	10833	6553			6.41	Si
SLU 73	4.35	-30161	4	-2916.39		49859	4.3209	10833	6553			1000	Si
SLU 83	0.67	-46056	1060	3676.88		76135	4.3209	10833	6553			6.18	Si
SLU 83	4.35	-31790	-15	-2866.54		52552	4.3209	10833	6553			443.12	Si
SLU 77	0.67	-44810	1020	4016.95		74075	4.3209	10833	6553			6.43	Si
SLU 77	4.35	-30982	-37	-2505.25		51217	4.3209	10833	6553			177.59	Si
SLU 81	0.67	-45806	1065	3262.41		75722	4.3209	10833	6553			6.15	Si
SLU 81	4.35	-31615	6	-3156.66		52262	4.3209	10833	6553			1000	Si
SLU 76	0.67	-44053	1017	3740.51		72824	4.3209	10833	6553			6.45	Si
SLU 76	4.35	-30336	-17	-2626.27		50148	4.3209	10833	6553			388.25	Si
SLU 74	0.67	-44560	1025	3602.49		73661	4.3209	10833	6553			6.39	Si
SLU 74	4.35	-30807	-16	-2795.37		50927	4.3209	10833	6553			414.03	Si
SLU 82	0.67	-45808	1068	3283.71		75725	4.3209	10833	6553			6.14	Si
SLU 82	4.35	-31615	8	-3144.78		52262	4.3209	10833	6553			804.57	Si
SLU 75	0.67	-44562	1028	3623.79		73665	4.3209	10833	6553			6.38	Si
SLU 75	4.35	-30807	-14	-2783.49		50927	4.3209	10833	6553			469.2	Si

Verifica a taglio nel piano secondo D.M. 17-01-18 (N.T.C.) §7.8.2.2.2 con rottura per scorrimento in combinazioni sismiche, γM = 2

Comb.	Quota	N	V par	M	σ0	σN	l'	fvd	Vt scorr.	Vt fess.diag.	Vt,lim	c.s.	Verifica
SLV 12	0.67	-20167	12938	34273.98		104169	1.3829	16250	3146			0.24	No, Vu<V
SLV 12	4.35	-12828	9634	12520.89		25788	3.5532	13491	6711			0.7	No, Vu<V
SLV 7	0.67	-9681	11623	41039.02		0	0	8333	0			0	No, Vu<V
SLV 7	4.35	-5275	8993	17340.87		0	0	8333	0			0	No, Vu<V
SLV 6	0.67	-40536	-11524	-29009.13		67010	4.3209	16250	9830			0.85	No, Vu<V
SLV 6	4.35	-28727	-9647	-16247.99		47489	4.3209	16250	9830			1.02	Si
SLV 11	0.67	-20167	12938	34273.98		104169	1.3829	16250	3146			0.24	No, Vu<V
SLV 11	4.35	-12828	9634	12520.89		25788	3.5532	13491	6711			0.7	No, Vu<V
SLV 10	0.67	-51022	-10208	-35774.17		84344	4.3209	16250	9830			0.96	No, Vu<V
SLV 10	4.35	-36280	-9006	-21067.97		59975	4.3209	16250	9830			1.09	Si

Comb.	Quota	N	V par	M	σ0	σN	l'	fvd	Vt scorr.	Vt fess.diag.	Vt,lim	c.s.	Verifica
SLV 9	0.67	-51022	-10208	-35774.17		84344	4.3209	16250	9830			0.96	No, Vu<V
SLV 9	4.35	-36280	-9006	-21067.97		59975	4.3209	16250	9830			1.09	Si
SLV 8	0.67	-9681	11623	41039.02		0	0	8333	0			0	No, Vu<V
SLV 8	4.35	-5275	8993	17340.87		0	0	8333	0			0	No, Vu<V
SLV 4	0.67	-8247	1986	24414.73		0	0	8333	0			0	No, Vu<V
SLV 4	4.35	-4672	1722	11208.09		0	0	8333	0			0	No, Vu<V
SLV 3	0.67	-8247	1986	24414.73		0	0	8333	0			0	No, Vu<V
SLV 3	4.35	-4672	1722	11208.09		0	0	8333	0			0	No, Vu<V
SLV 5	0.67	-40536	-11524	-29009.13		67010	4.3209	16250	9830			0.85	No, Vu<V
SLV 5	4.35	-28727	-9647	-16247.99		47489	4.3209	16250	9830			1.02	Si

Verifica a pressoflessione fuori piano D.M. 17-01-18 (N.T.C.)

quota 2.51 Wa 0.03 denominatore 8 γM = 2

Comb.	fd	Sa	σ0	N	M	Mc	Coeff.s.	Verifica
SLV 7	143750	0.3	9336	-5647	200.58	365.11	1.82	Si
SLV 8	143750	0.3	9336	-5647	200.58	365.11	1.82	Si
SLV 3	143750	0.3	9541	-5772	200.58	372.48	1.86	Si
SLV 4	143750	0.3	9541	-5772	200.58	372.48	1.86	Si
SLV 12	143750	0.3	22822	-13806	200.58	785.9	3.92	Si
SLV 11	143750	0.3	22822	-13806	200.58	785.9	3.92	Si
SLV 2	143750	0.3	23205	-14037	200.58	795.99	3.97	Si
SLV 1	143750	0.3	23205	-14037	200.58	795.99	3.97	Si
SLV 9	143750	0.3	68366	-41357	200.58	1275.17	6.36	Si
SLV 10	143750	0.3	68366	-41357	200.58	1275.17	6.36	Si

Verifica dei meccanismi locali di collasso con analisi cinematica lineare

forza di aggancio al piano = 0 quota mezzeria = 2.51 Wa = 0.03 Ta = 0.1615

Comb.	N top	N base	V orto	α0	M*	e*	a0*	aLim	Verifica
SLV 10	-36280	-51022	11	0.02	4007.4	0.976	0.2937	13.74169	No
SLV 9	-36280	-51022	11	0.02	4007.4	0.976	0.2937	13.74169	No
SLV 14	-36884	-52456	6	0.02	4068.9	0.976	0.29543	13.74169	No
SLV 13	-36884	-52456	6	0.02	4068.9	0.976	0.29543	13.74169	No
SLV 6	-28727	-40536	11	0.02	3238.2	0.97	0.29825	13.74169	No
SLV 5	-28727	-40536	11	0.02	3238.2	0.97	0.29825	13.74169	No
SLV 16	-29848	-43200	1	0.02	3352.3	0.971	0.30203	13.74169	No
SLV 15	-29848	-43200	1	0.02	3352.3	0.971	0.30203	13.74169	No
SLV 12	-12828	-20167	-6	0.021	1621.4	0.945	0.326	13.74169	No
SLV 11	-12828	-20167	-6	0.021	1621.4	0.945	0.326	13.74169	No

Tabella dei coefficienti di sicurezza minimi

Stato limite	Coeff.s.	Comb.	Verifica
PF_SLU	1.757	SLU 84	Si
V_SLU	6.138	SLU 82	Si
PF_SLV	0	SLV 3	No
V_SLV	0	SLV 3	No
PFFP_SLV	1.82	SLV 7	Si
R_SLV	0.021	SLV 9	No

Maschio 95

Verifiche condotte secondo D.M. 17-01-18 (N.T.C.)

Dati geometrici

X ini.	Y ini.	X fin.	Y fin.	Quota i.	Quota.s	l	Sp.	h netta	h ini.	h fin.	a	a.s.,sx	a.s.,dx
-9.89	-4.784	-11.003	-4.784	L3	L4	1.113	0.3	3.68	3.68	3.68			

Caratteristiche del materiale

(Circolare 7 21-01-19 C8.5.I) Muratura in mattoni pieni e malta di calce LC2_Corti

fb	fk	fvk0	fmedio	τ0	fv0	μ	ϕ	fv,lim	E	G	FC
600000			345000	9000	20000	0.58	0.77	32500	320000000	128000000	1.2

Verifica a pressoflessione nel piano secondo D.M. 17-01-18 NTC §7.8.2.2.1 in combinazioni non sismiche, γM = 3

Comb.	Quota	N	M	σ0	Mu	c.s.	Verifica
SLU 80	0.67	-15420	373.27	46190	3714.52	9.951	Si
SLU 80	3.78	-12444	264.05	37275	3755.31	14.222	Si
SLU 47	0.67	-13143	384.82	39369	3778.29	9.818	Si
SLU 47	3.78	-10445	277.82	31288	3579.24	12.884	Si
SLU 55	0.67	-14285	400.23	42790	3772.83	9.427	Si
SLU 55	3.78	-11445	277.25	34285	3687.81	13.301	Si
SLU 68	0.67	-14031	397.9	42031	3778.64	9.496	Si
SLU 68	3.78	-11241	276.73	33672	3668.94	13.258	Si
SLU 76	0.67	-15173	413.32	45452	3731.66	9.029	Si
SLU 76	3.78	-12241	276.16	36669	3744.92	13.561	Si
SLU 44	0.67	-12986	377.98	38899	3774.87	9.987	Si
SLU 44	3.78	-10290	274.32	30824	3558.78	12.973	Si
SLU 52	0.67	-14128	393.4	42320	3776.74	9.6	Si
SLU 52	3.78	-11290	273.75	33821	3673.68	13.42	Si
SLU 65	0.67	-13874	391.06	41561	3780.93	9.668	Si
SLU 65	3.78	-11086	273.23	33208	3653.52	13.372	Si
SLU 84	0.67	-15752	373.04	47186	3687.46	9.885	Si
SLU 84	3.78	-12718	260.3	38096	3766.7	14.47	Si
SLU 73	0.67	-15016	406.48	44981	3741.28	9.204	Si
SLU 73	3.78	-12086	272.66	36205	3735.84	13.701	Si

Verifica a pressoflessione nel piano secondo D.M. 17-01-18 NTC §7.8.2.2.1 in combinazioni sismiche, γM = 2

Comb.	Quota	N	M	σ0	Mu	c.s.	Verifica
SLV 4	0.67	863	2544.74	0	0	0	No, Trazione
SLV 4	3.78	-5682	-723.73	17020	2720.98	3.76	Si
SLV 7	0.67	-71	547.87	0	0	0	No, e>l/2
SLV 7	3.78	-3264	-254.28	9779	1670.93	6.571	Si
SLV 2	0.67	-3986	2784.8	0	0	0	No, e>l/2
SLV 2	3.78	-8683	-616.05	26009	3802.61	6.173	Si
SLV 8	0.67	-71	547.87	0	0	0	No, e>l/2
SLV 8	3.78	-3264	-254.28	9779	1670.93	6.571	Si
SLV 13	0.67	-22814	-2120.36	68339	5593.97	2.638	Si
SLV 13	3.78	-11778	1084.19	35282	4660.97	4.299	Si
SLV 16	0.67	-17965	-2360.42	53815	5593.23	2.37	Si
SLV 16	3.78	-8777	976.5	26293	3832.75	3.925	Si
SLV 14	0.67	-22814	-2120.36	68339	5593.97	2.638	Si
SLV 14	3.78	-11778	1084.19	35282	4660.97	4.299	Si
SLV 1	0.67	-3986	2784.8	0	0	0	No, e>l/2
SLV 1	3.78	-8683	-616.05	26009	3802.61	6.173	Si
SLV 3	0.67	863	2544.74	0	0	0	No, Trazione
SLV 3	3.78	-5682	-723.73	17020	2720.98	3.76	Si
SLV 15	0.67	-17965	-2360.42	53815	5593.23	2.37	Si
SLV 15	3.78	-8777	976.5	26293	3832.75	3.925	Si

Verifica a taglio nel piano secondo D.M. 17-01-18 (N.T.C.) §7.8.2.2.2 con rottura per scorrimento in combinazioni non sismiche, γM = 3

Comb.	Quota	N	V par	M	σ0	σN	I'	fvd	Vt scorr.	Vt fess.diag.	Vt,lim	c.s.	Verifica
SLU 84	0.67	-15752	-215	373.04		47186	1.1128	10833	3617			16.81	Si
SLU 84	3.78	-12718	7	260.3		38096	1.1128	10635	3550			512.91	Si
SLU 77	0.67	-15592	-224	301.24		46706	1.1128	10833	3617			16.13	Si
SLU 77	3.78	-12542	-38	242.3		37569	1.1128	10565	3527			93.51	Si
SLU 60	0.67	-14841	-224	282.8		44456	1.1128	10833	3617			16.12	Si
SLU 60	3.78	-11838	-33	234.48		35462	1.1128	10284	3433			103.33	Si
SLU 83	0.67	-15886	-239	302.72		47588	1.1128	10833	3617			15.1	Si
SLU 83	3.78	-12789	-30	236.88		38310	1.1128	10664	3560			119.09	Si
SLU 81	0.67	-15729	-246	295.89		47117	1.1128	10833	3617			14.71	Si
SLU 81	3.78	-12634	-25	233.39		37846	1.1128	10602	3539			141.01	Si
SLU 39	0.67	-12915	-211	239.16		38688	1.1128	10714	3577			16.92	Si
SLU 39	3.78	-10442	-13	178.8		31279	1.1128	9726	3247			241.75	Si
SLU 74	0.67	-15435	-231	294.41		46236	1.1128	10833	3617			15.68	Si
SLU 74	3.78	-12387	-33	238.8		37105	1.1128	10503	3506			106.5	Si
SLU 79	0.67	-15554	-218	302.95		46592	1.1128	10833	3617			16.59	Si
SLU 79	3.78	-12515	-37	240.63		37489	1.1128	10554	3523			94.97	Si
SLU 62	0.67	-14998	-218	289.64		44926	1.1128	10833	3617			16.6	Si
SLU 62	3.78	-11993	-38	237.97		35926	1.1128	10346	3454			90.84	Si
SLU 82	0.67	-15595	-222	366.21		46715	1.1128	10833	3617			16.32	Si
SLU 82	3.78	-12563	12	256.81		37632	1.1128	10573	3530			301.26	Si

Verifica a taglio nel piano secondo D.M. 17-01-18 (N.T.C.) §7.8.2.2.2 con rottura per scorrimento in combinazioni sismiche, γM = 2

Comb.	Quota	N	V par	M	σ0	σN	I'	fvd	Vt scorr.	Vt fess.diag.	Vt,lim	c.s.	Verifica
SLV 2	0.67	-3986	6485	2784.8		0	0	8333	0			0	No, Vu<V
SLV 2	3.78	-8683	-466	-616.05		26009	1.1128	13535	4518			9.69	Si
SLV 3	0.67	863	7159	2544.74		0	0	8333	0			0	No, Vu<V
SLV 3	3.78	-5682	-126	-723.73		17020	1.1128	11737	3918			31.05	Si
SLV 4	0.67	863	7159	2544.74		0	0	8333	0			0	No, Vu<V
SLV 4	3.78	-5682	-126	-723.73		17020	1.1128	11737	3918			31.05	Si
SLV 8	0.67	-71	3062	547.87		0	0	8333	0			0	No, Vu<V
SLV 8	3.78	-3264	460	-254.28		9779	1.1128	10289	3435			7.47	Si
SLV 13	0.67	-22814	-7471	-2120.36		68339	1.1128	16250	5425			0.73	No, Vu<V
SLV 13	3.78	-11778	75	1084.19		35282	1.1128	15390	5138			68.66	Si
SLV 1	0.67	-3986	6485	2784.8		0	0	8333	0			0	No, Vu<V
SLV 1	3.78	-8683	-466	-616.05		26009	1.1128	13535	4518			9.69	Si
SLV 15	0.67	-17965	-6796	-2360.42		53815	1.1128	16250	5425			0.8	No, Vu<V
SLV 15	3.78	-8777	415	976.5		26293	1.1128	13592	4537			10.94	Si
SLV 16	0.67	-17965	-6796	-2360.42		53815	1.1128	16250	5425			0.8	No, Vu<V
SLV 16	3.78	-8777	415	976.5		26293	1.1128	13592	4537			10.94	Si
SLV 7	0.67	-71	3062	547.87		0	0	8333	0			0	No, Vu<V
SLV 7	3.78	-3264	460	-254.28		9779	1.1128	10289	3435			7.47	Si
SLV 14	0.67	-22814	-7471	-2120.36		68339	1.1128	16250	5425			0.73	No, Vu<V
SLV 14	3.78	-11778	75	1084.19		35282	1.1128	15390	5138			68.66	Si

Verifica a pressoflessione fuori piano D.M. 17-01-18 (N.T.C.)

quota 2.51 Wa 0.05 denominatore 8 γM = 2

Comb.	fd	Sa	σ0	N	M	Mc	Coeff.s.	Verifica
SLV 12	143750	0.3	11773	-3930	101.07	532.71	5.27	Si
SLV 11	143750	0.3	11773	-3930	101.07	532.71	5.27	Si
SLV 8	143750	0.3	13527	-4516	101.07	602.37	5.96	Si
SLV 7	143750	0.3	13527	-4516	101.07	602.37	5.96	Si
SLV 15	143750	0.3	22074	-7369	101.07	905.67	8.96	Si
SLV 16	143750	0.3	22074	-7369	101.07	905.67	8.96	Si
SLV 3	143750	0.3	27923	-9321	101.07	1078.69	10.67	Si
SLV 4	143750	0.3	27923	-9321	101.07	1078.69	10.67	Si
SLV 14	143750	0.3	32659	-10903	101.07	1198.27	11.86	Si
SLV 13	143750	0.3	32659	-10903	101.07	1198.27	11.86	Si

Verifica dei meccanismi locali di collasso con analisi cinematica lineare

forza di aggancio al piano = 0 quota mezzeria = 2.51 Wa = 0.05 Ta = 0.0754

Comb.	N top	N base	V orto	α0	M*	e*	a0*	aLim	Verifica
SLV 3	-3652	863	-35	0	0	0	0	9.5486	No, Trazione
SLV 4	-3652	863	-35	0	0	0	0	9.5486	No, Trazione
SLV 8	-2504	-71	-135	0.016	434.5	0.904	0.25637	8.44994	No
SLV 7	-2504	-71	-135	0.016	434.5	0.904	0.25637	8.44994	No

Comb.	N top	N base	V orto	α0	M*	e*	a0*	aLim	Verifica
SLV 11	-4264	-5719	-138	0.023	610.2	0.924	0.36756	8.44994	No
SLV 12	-4264	-5719	-138	0.023	610.2	0.924	0.36756	8.44994	No
SLV 6	-11650	-16232	139	0.033	1359.1	0.962	0.50498	8.44994	No
SLV 5	-11650	-16232	139	0.033	1359.1	0.962	0.50498	8.44994	No
SLV 9	-13410	-21880	135	0.035	1538.2	0.966	0.52012	8.44994	No
SLV 10	-13410	-21880	135	0.035	1538.2	0.966	0.52012	8.44994	No

Tabella dei coefficienti di sicurezza minimi

Stato limite	Coeff.s.	Comb.	Verifica
PF_SLU	9.029	SLU 76	Si
V_SLU	14.709	SLU 81	Si
PF_SLV	0	SLV 4	No
V_SLV	0	SLV 1	No
PFFP_SLV	5.271	SLV 11	Si
R_SLV	0	SLV 4	No

Maschio 96

Verifiche condotte secondo D.M. 17-01-18 (N.T.C.)

Dati geometrici

X ini.	Y ini.	X fin.	Y fin.	Quota i.	Quota.s	l	Sp.	h netta	h ini.	h fin.	a	a.s.,sx	a.s.,dx
-7.723	-4.784	-8.05	-4.784	L3	L4	0.327	0.3	3.68	3.68	3.68			

Caratteristiche del materiale

(Circolare 7 21-01-19 C8.5.I) Muratura in mattoni pieni e malta di calce LC2_Corti

fb	fk	fvk0	fmedio	τ0	fv0	μ	ϕ	fv,lim	E	G	FC
600000			345000	9000	20000	0.58	0.77	32500	320000000	128000000	1.2

Verifica a pressoflessione nel piano secondo D.M. 17-01-18 NTC §7.8.2.2.1 in combinazioni non sismiche, γM = 3

Comb.	Quota	N	M	σ0	Mu	c.s.	Verifica
SLU 74	0.67	-6043	280.93	61559	241.55	0.86	No, M>Mu
SLU 74	3.78	-3496	-116.2	35609	321.93	2.77	Si
SLU 81	0.67	-6136	284.7	62500	233.63	0.821	No, M>Mu
SLU 81	3.78	-3570	-117.36	36365	323.34	2.755	Si
SLU 78	0.67	-5623	296.54	57280	273.08	0.921	No, M>Mu
SLU 78	3.78	-3749	-116.98	38187	325.82	2.785	Si
SLU 80	0.67	-5616	296.9	57207	273.56	0.921	No, M>Mu
SLU 80	3.78	-3750	-117.03	38199	325.83	2.784	Si
SLU 62	0.67	-5856	273.94	59649	256.51	0.936	No, M>Mu
SLU 62	3.78	-3386	-113.04	34490	319.42	2.826	Si
SLU 79	0.67	-6117	285.31	62311	235.25	0.825	No, M>Mu
SLU 79	3.78	-3545	-118.18	36110	322.89	2.732	Si
SLU 82	0.67	-5635	296.29	57396	272.32	0.919	No, M>Mu
SLU 82	3.78	-3775	-116.22	38454	326.08	2.806	Si
SLU 83	0.67	-6217	288.72	63326	226.41	0.784	No, M>Mu
SLU 83	3.78	-3618	-119.29	36855	324.14	2.717	Si
SLU 84	0.67	-5716	300.31	58222	266.76	0.888	No, M>Mu
SLU 84	3.78	-3823	-118.15	38944	326.47	2.763	Si
SLU 77	0.67	-6124	284.95	62384	234.63	0.823	No, M>Mu
SLU 77	3.78	-3544	-118.12	36099	322.87	2.733	Si

Verifica a pressoflessione nel piano secondo D.M. 17-01-18 NTC §7.8.2.2.1 in combinazioni sismiche, γM = 2

Comb.	Quota	N	M	σ0	Mu	c.s.	Verifica
SLV 9	0.67	-15536	-88.45	158253	0	0	No, Rottura per schiacciamento
SLV 9	3.78	1221	-141.05	0	0	0	No, Trazione
SLV 12	0.67	7581	502.39	0	0	0	No, Trazione
SLV 12	3.78	-7088	10.42	72201	474.43	45.538	Si
SLV 5	0.67	-16176	-99.08	164773	0	0	No, Rottura per schiacciamento
SLV 5	3.78	2158	-176.7	0	0	0	No, Trazione
SLV 11	0.67	7581	502.39	0	0	0	No, Trazione
SLV 11	3.78	-7088	10.42	72201	474.43	45.538	Si
SLV 8	0.67	6941	491.76	0	0	0	No, Trazione
SLV 8	3.78	-6151	-25.24	62661	490.32	19.43	Si
SLV 6	0.67	-16176	-99.08	164773	0	0	No, Rottura per schiacciamento
SLV 6	3.78	2158	-176.7	0	0	0	No, Trazione
SLV 10	0.67	-15536	-88.45	158253	0	0	No, Rottura per schiacciamento
SLV 10	3.78	1221	-141.05	0	0	0	No, Trazione
SLV 7	0.67	6941	491.76	0	0	0	No, Trazione
SLV 7	3.78	-6151	-25.24	62661	490.32	19.43	Si
SLV 1	0.67	-8832	95.31	89964	381.08	3.998	Si
SLV 1	3.78	342	-165.29	0	0	0	No, Trazione
SLV 2	0.67	-8832	95.31	89964	381.08	3.998	Si
SLV 2	3.78	342	-165.29	0	0	0	No, Trazione

Verifica a taglio nel piano secondo D.M. 17-01-18 (N.T.C.) §7.8.2.2.2 con rottura per scorrimento in combinazioni non sismiche, γM = 3

Comb.	Quota	N	V par	M	σ0	σN	l'	fvd	Vt scorr.	Vt fess.diag.	Vt,lim	c.s.	Verifica
SLU 10	0.67	-3660	-42	229.13		40261	0.3031	10833	985			23.19	Si
SLU 10	3.78	-2943	110	-84.52		29974	0.3272	9552	938			8.5	Si
SLU 26	0.67	-3681	-39	230.6		40506	0.3029	10833	984			25.45	Si
SLU 26	3.78	-2940	105	-85.6		29949	0.3272	9549	937			8.9	Si
SLU 44	0.67	-4337	-30	264.46		46952	0.3079	10833	1001			33.52	Si
SLU 44	3.78	-3276	113	-99.09		33366	0.3272	10004	982			8.67	Si

Comb.	Quota	N	V par	M	σ0	σN	l'	fvd	Vt scorr.	Vt fess.diag.	Vt,lim	c.s.	Verifica
SLU 13	0.67	-3741	-40	233.15		41038	0.3039	10833	988			24.55	Si
SLU 13	3.78	-2991	108	-86.44		30464	0.3272	9617	944			8.71	Si
SLU 23	0.67	-3600	-41	226.58		39730	0.302	10833	982			23.99	Si
SLU 23	3.78	-2892	107	-83.68		29459	0.3272	9483	931			8.68	Si
SLU 31	0.67	-4021	-39	243.92		43397	0.3089	10833	1004			25.43	Si
SLU 31	3.78	-3175	106	-90.76		32340	0.3272	9867	969			9.18	Si
SLU 52	0.67	-4759	-28	281.8		50648	0.3132	10833	1018			35.82	Si
SLU 52	3.78	-3558	112	-106.18		36247	0.3272	10388	1020			9.14	Si
SLU 2	0.67	-3239	-44	211.79		36637	0.2947	10441	923			21.02	Si
SLU 2	3.78	-2660	112	-77.43		27094	0.3272	9168	900			8.03	Si
SLU 47	0.67	-4418	-28	268.48		47732	0.3085	10833	1003			36.32	Si
SLU 47	3.78	-3324	111	-101.01		33856	0.3272	10070	989			8.88	Si
SLU 5	0.67	-3320	-42	215.81		37407	0.2958	10543	936			22.45	Si
SLU 5	3.78	-2708	110	-79.36		27583	0.3272	9233	906			8.23	Si

Verifica a taglio nel piano secondo D.M. 17-01-18 (N.T.C.) §7.8.2.2.2 con rottura per scorrimento in combinazioni sismiche, γM = 2

Comb.	Quota	N	V par	M	σ0	σN	l'	fvd	Vt scorr.	Vt fess.diag.	Vt,lim	c.s.	Verifica
SLV 10	0.67	-15536	1044	-88.45		158253	0.3272	16250	1595			1.53	Si
SLV 10	3.78	1221	-1248	-141.05		0	0	8333	0			0	No, Vu<V
SLV 7	0.67	6941	-940	491.76		0	0	8333	0			0	No, Vu<V
SLV 7	3.78	-6151	1242	-25.24		62661	0.3272	16250	1595			1.28	Si
SLV 8	0.67	6941	-940	491.76		0	0	8333	0			0	No, Vu<V
SLV 8	3.78	-6151	1242	-25.24		62661	0.3272	16250	1595			1.28	Si
SLV 12	0.67	7581	-971	502.39		0	0	8333	0			0	No, Vu<V
SLV 12	3.78	-7088	1779	10.42		72201	0.3272	16250	1595			0.9	No, Vu<V
SLV 9	0.67	-15536	1044	-88.45		158253	0.3272	16250	1595			1.53	Si
SLV 9	3.78	1221	-1248	-141.05		0	0	8333	0			0	No, Vu<V
SLV 1	0.67	-8832	404	95.31		89964	0.3272	16250	1595			3.95	Si
SLV 1	3.78	342	-1352	-165.29		0	0	8333	0			0	No, Vu<V
SLV 5	0.67	-16176	1074	-99.08		164773	0.3272	16250	1595			1.49	Si
SLV 5	3.78	2158	-1785	-176.7		0	0	8333	0			0	No, Vu<V
SLV 2	0.67	-8832	404	95.31		89964	0.3272	16250	1595			3.95	Si
SLV 2	3.78	342	-1352	-165.29		0	0	8333	0			0	No, Vu<V
SLV 11	0.67	7581	-971	502.39		0	0	8333	0			0	No, Vu<V
SLV 11	3.78	-7088	1779	10.42		72201	0.3272	16250	1595			0.9	No, Vu<V
SLV 6	0.67	-16176	1074	-99.08		164773	0.3272	16250	1595			1.49	Si
SLV 6	3.78	2158	-1785	-176.7		0	0	8333	0			0	No, Vu<V

Verifica a pressoflessione fuori piano D.M. 17-01-18 (N.T.C.)

quota 2.51 Wa 0.05 denominatore 8 γM = 2

Comb.	fd	Sa	σ0	N	M	Mc	Coeff.s.	Verifica
SLV 1	143750	0.3	6684	-656	29.72	93.04	3.13	Si
SLV 2	143750	0.3	6684	-656	29.72	93.04	3.13	Si
SLV 4	143750	0.3	9474	-930	29.72	128.69	4.33	Si
SLV 3	143750	0.3	9474	-930	29.72	128.69	4.33	Si
SLV 5	143750	0.3	24392	-2394	29.72	287.47	9.67	Si
SLV 6	143750	0.3	24392	-2394	29.72	287.47	9.67	Si
SLV 8	143750	0.3	33691	-3307	29.72	359.32	12.09	Si
SLV 7	143750	0.3	33691	-3307	29.72	359.32	12.09	Si
SLV 9	143750	0.3	42359	-4158	29.72	407.51	13.71	Si
SLV 10	143750	0.3	42359	-4158	29.72	407.51	13.71	Si

Verifica dei meccanismi locali di collasso con analisi cinematica lineare

forza di aggancio al piano = 0 quota mezzeria = 2.51 Wa = 0.05 Ta = 0.0754

Comb.	N top	N base	V orto	α0	M*	e*	a0*	aLim	Verifica
SLV 8	-457	6941	-13	0	0	0	0	8.44994	No, Trazione
SLV 15	-1870	237	-6	0	0	0	0	9.5486	No, Trazione
SLV 16	-1870	237	-6	0	0	0	0	9.5486	No, Trazione
SLV 12	-575	7581	-14	0	0	0	0	8.44994	No, Trazione
SLV 7	-457	6941	-13	0	0	0	0	8.44994	No, Trazione
SLV 11	-575	7581	-14	0	0	0	0	8.44994	No, Trazione
SLV 2	-2469	-8832	7	0.043	302.4	0.951	0.65612	9.5486	No
SLV 1	-2469	-8832	7	0.043	302.4	0.951	0.65612	9.5486	No
SLV 13	-2863	-6698	2	0.044	342.4	0.956	0.67146	9.5486	No
SLV 14	-2863	-6698	2	0.044	342.4	0.956	0.67146	9.5486	No

Tabella dei coefficienti di sicurezza minimi

Stato limite	Coeff.s.	Comb.	Verifica
PF_SLU	0.784	SLU 83	No
V_SLU	8.033	SLU 2	Si
PF_SLV	0	SLV 16	No
V_SLV	0	SLV 1	No
PFFP_SLV	3.131	SLV 1	Si
R_SLV	0	SLV 16	No

Maschio 97

Verifiche condotte secondo D.M. 17-01-18 (N.T.C.)

Dati geometrici

X ini.	Y ini.	X fin.	Y fin.	Quota i.	Quota.s	l	Sp.	h netta	h ini.	h fin.	a	a.s.,sx	a.s.,dx
-9.454	-3.248	-11.003	-3.248	L3	L4	1.549	0.28	3.68	3.68	3.68			

Caratteristiche del materiale

(Circolare 7 21-01-19 C8.5.I) Muratura in mattoni pieni e malta di calce LC2_Corti

fb	fk	fvk0	fmedio	τ0	fv0	μ	ϕ	fv,lim	E	G	FC
600000			345000	9000	20000	0.58	0.77	32500	320000000	128000000	1.2

Verifica a pressoflessione nel piano secondo D.M. 17-01-18 NTC §7.8.2.2.1 in combinazioni non sismiche, γM = 3

Comb.	Quota	N	M	σ0	Mu	c.s.	Verifica
SLU 83	0.67	-14778	4429.77	34072	6658.66	1.503	Si
SLU 83	2.77	-17208	1252.78	39674	6836.86	5.457	Si
SLU 79	0.67	-14537	4261.59	33516	6626.87	1.555	Si
SLU 79	2.77	-16768	1248.15	38659	6823.78	5.467	Si
SLU 84	0.67	-14852	4355.59	34241	6667.81	1.531	Si
SLU 84	2.77	-17244	1265.71	39757	6837.55	5.402	Si
SLU 74	0.67	-14408	4239.13	33218	6608.77	1.559	Si
SLU 74	2.77	-16621	1232.5	38321	6817.54	5.531	Si
SLU 82	0.67	-14647	4313.87	33769	6641.66	1.54	Si
SLU 82	2.77	-17001	1249.9	39196	6831.76	5.466	Si
SLU 78	0.67	-14686	4206.67	33858	6646.75	1.58	Si
SLU 78	2.77	-16900	1261.24	38964	6828.59	5.414	Si
SLU 80	0.67	-14610	4187.41	33685	6636.79	1.585	Si
SLU 80	2.77	-16804	1261.08	38741	6825.15	5.412	Si
SLU 81	0.67	-14574	4388.05	33600	6631.86	1.511	Si
SLU 81	2.77	-16965	1236.97	39114	6830.69	5.522	Si
SLU 77	0.67	-14612	4280.85	33689	6637.06	1.55	Si
SLU 77	2.77	-16864	1248.31	38881	6827.37	5.469	Si
SLU 75	0.67	-14481	4164.95	33387	6619.11	1.589	Si
SLU 75	2.77	-16657	1245.43	38403	6819.14	5.475	Si

Verifica a pressoflessione nel piano secondo D.M. 17-01-18 NTC §7.8.2.2.1 in combinazioni sismiche, γM = 2

Comb.	Quota	N	M	σ0	Mu	c.s.	Verifica
SLV 8	0.67	-3188	3809.83	0	0	0	No, e>l/2
SLV 8	2.77	-6407	950.5	14772	4362.79	4.59	Si
SLV 11	0.67	-3379	1298.28	7790	2450.26	1.887	Si
SLV 11	2.77	-3008	3107.37	0	0	0	No, e>l/2
SLV 4	0.67	-7782	6972.57	0	0	0	No, e>l/2
SLV 4	2.77	-15087	-2350.65	34784	8358.99	3.556	Si
SLV 3	0.67	-7782	6972.57	0	0	0	No, e>l/2
SLV 3	2.77	-15087	-2350.65	34784	8358.99	3.556	Si
SLV 15	0.67	-8419	-1399.27	19411	5485.13	3.92	Si
SLV 15	2.77	-3757	4838.93	0	0	0	No, e>l/2
SLV 7	0.67	-3188	3809.83	0	0	0	No, e>l/2
SLV 7	2.77	-6407	950.5	14772	4362.79	4.59	Si
SLV 2	0.67	-11911	7171.94	27460	7151.92	0.997	No, M>Mu
SLV 2	2.77	-19128	-3023.33	44100	9468.17	3.132	Si
SLV 1	0.67	-11911	7171.94	27460	7151.92	0.997	No, M>Mu
SLV 1	2.77	-19128	-3023.33	44100	9468.17	3.132	Si
SLV 16	0.67	-8419	-1399.27	19411	5485.13	3.92	Si
SLV 16	2.77	-3757	4838.93	0	0	0	No, e>l/2
SLV 12	0.67	-3379	1298.28	7790	2450.26	1.887	Si
SLV 12	2.77	-3008	3107.37	0	0	0	No, e>l/2

Verifica a taglio nel piano secondo D.M. 17-01-18 (N.T.C.) §7.8.2.2.2 con rottura per scorrimento in combinazioni non sismiche, γM = 3

Comb.	Quota	N	V par	M	σ0	σN	I'	fvd	Vt scorr.	Vt fess.diag.	Vt,lim	c.s.	Verifica
SLU 41	0.67	-12209	2582	3782.93		31278	1.394	9726	3796			1.47	Si
SLU 41	2.77	-14519	3018	994.15		33474	1.5491	10019	4346			1.44	Si
SLU 78	0.67	-14686	2775	4206.67		35819	1.4643	10331	4236			1.53	Si
SLU 78	2.77	-16900	3194	1261.24		38964	1.5491	10751	4663			1.46	Si
SLU 82	0.67	-14647	2873	4313.87		36326	1.44	10399	4193			1.46	Si
SLU 82	2.77	-17001	3336	1249.9		39196	1.5491	10782	4676			1.4	Si
SLU 39	0.67	-12004	2557	3741.21		30873	1.3886	9672	3761			1.47	Si
SLU 39	2.77	-14276	2995	978.34		32914	1.5491	9944	4313			1.44	Si
SLU 79	0.67	-14537	2817	4261.59		35951	1.4442	10349	4185			1.49	Si
SLU 79	2.77	-16768	3260	1248.15		38659	1.5491	10710	4645			1.42	Si
SLU 74	0.67	-14408	2808	4239.13		35711	1.4409	10317	4163			1.48	Si
SLU 74	2.77	-16621	3256	1232.5		38321	1.5491	10665	4626			1.42	Si
SLU 77	0.67	-14612	2833	4280.85		36122	1.4447	10372	4196			1.48	Si
SLU 77	2.77	-16864	3280	1248.31		38881	1.5491	10740	4658			1.42	Si
SLU 84	0.67	-14852	2897	4355.59		36738	1.4438	10454	4226			1.46	Si
SLU 84	2.77	-17244	3359	1265.71		39757	1.5491	10833	4699			1.4	Si
SLU 81	0.67	-14574	2930	4388.05		36646	1.4203	10442	4153			1.42	Si
SLU 81	2.77	-16965	3421	1236.97		39114	1.5491	10771	4672			1.37	Si
SLU 83	0.67	-14778	2955	4429.77		37055	1.4244	10496	4186			1.42	Si
SLU 83	2.77	-17208	3444	1252.78		39674	1.5491	10833	4699			1.36	Si

Verifica a taglio nel piano secondo D.M. 17-01-18 (N.T.C.) §7.8.2.2.2 con rottura per scorrimento in combinazioni sismiche, γM = 2

Comb.	Quota	N	V par	M	σ0	σN	I'	fvd	Vt scorr.	Vt fess.diag.	Vt,lim	c.s.	Verifica
SLV 8	0.67	-3188	2041	3809.83		0	0	8333	0			0	No, Vu<V
SLV 8	2.77	-6407	1112	950.5		14772	1.5491	11288	4896			4.4	Si
SLV 15	0.67	-8419	-5100	-1399.27		19411	1.5491	12216	5298			1.04	Si
SLV 15	2.77	-3757	-4094	4838.93		0	0	8333	0			0	No, Vu<V
SLV 16	0.67	-8419	-5100	-1399.27		19411	1.5491	12216	5298			1.04	Si
SLV 16	2.77	-3757	-4094	4838.93		0	0	8333	0			0	No, Vu<V
SLV 7	0.67	-3188	2041	3809.83		0	0	8333	0			0	No, Vu<V
SLV 7	2.77	-6407	1112	950.5		14772	1.5491	11288	4896			4.4	Si
SLV 1	0.67	-11911	8833	7171.94		82253	0.5172	16250	2353			0.27	No, Vu<V
SLV 1	2.77	-19128	8390	-3023.33		44100	1.5491	16250	7048			0.84	No, Vu<V
SLV 4	0.67	-7782	7778	6972.57		0	0	8333	0			0	No, Vu<V
SLV 4	2.77	-15087	6789	-2350.65		34784	1.5491	15290	6632			0.98	No, Vu<V
SLV 12	0.67	-3379	-1823	1298.28		10306	1.1709	10395	3408			1.87	Si
SLV 12	2.77	-3008	-2153	3107.37		0	0	8333	0			0	No, Vu<V
SLV 2	0.67	-11911	8833	7171.94		82253	0.5172	16250	2353			0.27	No, Vu<V
SLV 2	2.77	-19128	8390	-3023.33		44100	1.5491	16250	7048			0.84	No, Vu<V
SLV 11	0.67	-3379	-1823	1298.28		10306	1.1709	10395	3408			1.87	Si
SLV 11	2.77	-3008	-2153	3107.37		0	0	8333	0			0	No, Vu<V
SLV 3	0.67	-7782	7778	6972.57		0	0	8333	0			0	No, Vu<V
SLV 3	2.77	-15087	6789	-2350.65		34784	1.5491	15290	6632			0.98	No, Vu<V

Verifica a pressoflessione fuori piano D.M. 17-01-18 (N.T.C.)

quota 2.51 Wa 0.05 denominatore 8 γM = 2

Comb.	fd	Sa	σ0	N	M	Mc	Coeff.s.	Verifica
SLV 12	143750	0.3	7018	-3044	134.44	401.67	2.99	Si
SLV 11	143750	0.3	7018	-3044	134.44	401.67	2.99	Si
SLV 16	143750	0.3	10304	-4469	134.44	572.94	4.26	Si
SLV 15	143750	0.3	10304	-4469	134.44	572.94	4.26	Si
SLV 8	143750	0.3	13531	-5869	134.44	730.67	5.43	Si
SLV 7	143750	0.3	13531	-5869	134.44	730.67	5.43	Si
SLV 13	143750	0.3	19635	-8516	134.44	1000.7	7.44	Si
SLV 14	143750	0.3	19635	-8516	134.44	1000.7	7.44	Si
SLV 4	143750	0.3	32016	-13887	134.44	1434.72	10.67	Si
SLV 3	143750	0.3	32016	-13887	134.44	1434.72	10.67	Si

Verifica dei meccanismi locali di collasso con analisi cinematica lineare

forza di aggancio al piano = 0 quota mezzeria = 2.51 Wa = 0.05 Ta = 0.0808

Comb.	N top	N base	V orto	α0	M*	e*	a0*	aLim	Verifica
SLV 8	-5349	-3188	-128	0.027	773.6	0.923	0.42993	9.1791	No
SLV 7	-5349	-3188	-128	0.027	773.6	0.923	0.42993	9.1791	No
SLV 3	-8457	-7782	-81	0.035	1087.5	0.942	0.54544	10.39734	No
SLV 4	-8457	-7782	-81	0.035	1087.5	0.942	0.54544	10.39734	No
SLV 14	-14375	-12548	83	0.036	1688.5	0.96	0.5483	10.39734	No
SLV 13	-14375	-12548	83	0.036	1688.5	0.96	0.5483	10.39734	No
SLV 11	-6100	-3379	-99	0.032	849.1	0.928	0.50421	9.1791	No
SLV 12	-6100	-3379	-99	0.032	849.1	0.928	0.50421	9.1791	No
SLV 10	-17483	-17142	129	0.034	2004.7	0.966	0.51285	9.1791	No
SLV 9	-17483	-17142	129	0.034	2004.7	0.966	0.51285	9.1791	No

Tabella dei coefficienti di sicurezza minimi

Stato limite	Coeff.s.	Comb.	Verifica
PF_SLU	1.503	SLU 83	Si
V_SLU	1.364	SLU 83	Si
PF_SLV	0	SLV 3	No
V_SLV	0	SLV 3	No
PFFP_SLV	2.988	SLV 11	Si
R_SLV	0.047	SLV 7	No

Maschio 98

Verifiche condotte secondo D.M. 17-01-18 (N.T.C.)

Dati geometrici

X ini.	Y ini.	X fin.	Y fin.	Quota i.	Quota.s	l	Sp.	h netta	h ini.	h fin.	a	a.s.,sx	a.s.,dx
-7.723	-4.589	-7.723	-4.784	L3	L4	0.195	0.3	3.68	3.68	3.68			

Caratteristiche del materiale

(Circolare 7 21-01-19 C8.5.I) Muratura in mattoni pieni e malta di calce LC2_Corti

fb	fk	fvk0	fmedio	τ0	fv0	μ	ϕ	fv,lim	E	G	FC
600000			345000	9000	20000	0.58	0.77	32500	320000000	128000000	1.2

Verifica a pressoflessione nel piano secondo D.M. 17-01-18 NTC §7.8.2.2.1 in combinazioni non sismiche, γM = 3

Comb.	Quota	N	M	σ0	Mu	c.s.	Verifica
SLU 53	0.67	-2659	-16.42	45447	114.6	6.978	Si
SLU 53	3.78	-1696	224.14	0	0	0	No, e>l/2
SLU 1	0.67	-1908	-12.49	32623	111.55	8.932	Si
SLU 1	3.78	-1211	160.41	0	0	0	No, e>l/2
SLU 57	0.67	-3136	-60.96	53611	104.54	1.715	Si
SLU 57	3.78	-1697	242.81	0	0	0	No, e>l/2
SLU 60	0.67	-2720	-17.49	46493	113.83	6.509	Si
SLU 60	3.78	-1724	228.17	0	0	0	No, e>l/2
SLU 55	0.67	-3407	-91.41	58237	94.69	1.036	Si
SLU 55	3.78	-1651	249.58	0	0	0	No, e>l/2
SLU 59	0.67	-3139	-61.53	53660	104.45	1.698	Si
SLU 59	3.78	-1697	243.01	0	0	0	No, e>l/2
SLU 56	0.67	-2689	-16.31	45966	114.23	7.005	Si
SLU 56	3.78	-1724	227.66	0	0	0	No, e>l/2
SLU 58	0.67	-2692	-16.88	46016	114.2	6.767	Si
SLU 58	3.78	-1724	227.86	0	0	0	No, e>l/2
SLU 54	0.67	-3106	-61.07	53091	105.45	1.727	Si
SLU 54	3.78	-1669	239.29	0	0	0	No, e>l/2
SLU 61	0.67	-3167	-62.14	54137	103.57	1.667	Si
SLU 61	3.78	-1697	243.32	0	0	0	No, e>l/2

Verifica a pressoflessione nel piano secondo D.M. 17-01-18 NTC §7.8.2.2.1 in combinazioni sismiche, γM = 2

Comb.	Quota	N	M	σ0	Mu	c.s.	Verifica
SLV 2	0.67	3546	469.7	0	0	0	No, Trazione
SLV 2	3.78	-1667	221.17	0	0	0	No, e>l/2
SLV 1	0.67	3546	469.7	0	0	0	No, Trazione
SLV 1	3.78	-1667	221.17	0	0	0	No, e>l/2
SLV 4	0.67	-2598	-171.75	44415	161.25	0.939	No, M>Mu
SLV 4	3.78	-1191	396.35	0	0	0	No, e>l/2
SLV 9	0.67	7479	1007.82	0	0	0	No, Trazione
SLV 9	3.78	-2029	-164.37	34692	141.69	0.862	No, M>Mu
SLV 7	0.67	-11508	-1033.32	196720	0	0	No, Rottura per schiacciamento
SLV 7	3.78	-533	503.18	0	0	0	No, e>l/2

Comb.	Quota	N	M	σ0	Mu	c.s.	Verifica
SLV 8	0.67	-11508	-1033.32	196720	0	0	No, Rottura per schiacciamento
SLV 8	3.78	-533	503.18	0	0	0	No, e>l/2
SLV 6	0.67	8972	1104.85	0	0	0	No, Trazione
SLV 6	3.78	-2118	-80.76	36206	145.32	1.799	Si
SLV 3	0.67	-2598	-171.75	44415	161.25	0.939	No, M>Mu
SLV 3	3.78	-1191	396.35	0	0	0	No, e>l/2
SLV 10	0.67	7479	1007.82	0	0	0	No, Trazione
SLV 10	3.78	-2029	-164.37	34692	141.69	0.862	No, M>Mu
SLV 5	0.67	8972	1104.85	0	0	0	No, Trazione
SLV 5	3.78	-2118	-80.76	36206	145.32	1.799	Si

Verifica a taglio nel piano secondo D.M. 17-01-18 (N.T.C.) §7.8.2.2.2 con rottura per scorrimento in combinazioni non sismiche, γM = 3

Comb.	Quota	N	V par	M	σ0	σN	I'	fvd	Vt scorr.	Vt fess.diag.	Vt,lim	c.s.	Verifica
SLU 54	0.67	-3106	56	-61.07		53091	0.195	10833	634			11.34	Si
SLU 54	3.78	-1669	332	239.29		0	0	5556	0			0	No, Vu<V
SLU 55	0.67	-3407	12	-91.41		58237	0.195	10833	634			52.88	Si
SLU 55	3.78	-1651	390	249.58		0	0	5556	0			0	No, Vu<V
SLU 59	0.67	-3139	57	-61.53		53660	0.195	10833	634			11.06	Si
SLU 59	3.78	-1697	336	243.01		0	0	5556	0			0	No, Vu<V
SLU 57	0.67	-3136	58	-60.96		53611	0.195	10833	634			10.88	Si
SLU 57	3.78	-1697	335	242.81		0	0	5556	0			0	No, Vu<V
SLU 56	0.67	-2689	123	-16.31		45966	0.195	10833	634			5.16	Si
SLU 56	3.78	-1724	250	227.66		0	0	5556	0			0	No, Vu<V
SLU 53	0.67	-2659	120	-16.42		45447	0.195	10833	634			5.27	Si
SLU 53	3.78	-1696	247	224.14		0	0	5556	0			0	No, Vu<V
SLU 58	0.67	-2692	122	-16.88		46016	0.195	10833	634			5.2	Si
SLU 58	3.78	-1724	251	227.86		0	0	5556	0			0	No, Vu<V
SLU 60	0.67	-2720	121	-17.49		46493	0.195	10833	634			5.24	Si
SLU 60	3.78	-1724	252	228.17		0	0	5556	0			0	No, Vu<V
SLU 1	0.67	-1908	85	-12.49		32623	0.195	9905	579			6.78	Si
SLU 1	3.78	-1211	180	160.41		0	0	5556	0			0	No, Vu<V
SLU 61	0.67	-3167	57	-62.14		54137	0.195	10833	634			11.21	Si
SLU 61	3.78	-1697	338	243.32		0	0	5556	0			0	No, Vu<V

Verifica a taglio nel piano secondo D.M. 17-01-18 (N.T.C.) §7.8.2.2.2 con rottura per scorrimento in combinazioni sismiche, γM = 2

Comb.	Quota	N	V par	M	σ0	σN	I'	fvd	Vt scorr.	Vt fess.diag.	Vt,lim	c.s.	Verifica
SLV 10	0.67	7479	1805	1007.82		0	0	8333	0			0	No, Vu<V
SLV 10	3.78	-2029	-1212	-164.37		136599	0.0495	16250	241			0.2	No, Vu<V
SLV 1	0.67	3546	680	469.7		0	0	8333	0			0	No, Vu<V
SLV 1	3.78	-1667	-1774	221.17		0	0	8333	0			0	No, Vu<V
SLV 2	0.67	3546	680	469.7		0	0	8333	0			0	No, Vu<V
SLV 2	3.78	-1667	-1774	221.17		0	0	8333	0			0	No, Vu<V
SLV 3	0.67	-2598	-361	-171.75		91950	0.0942	16250	459			1.27	Si
SLV 3	3.78	-1191	-680	396.35		0	0	8333	0			0	No, Vu<V
SLV 9	0.67	7479	1805	1007.82		0	0	8333	0			0	No, Vu<V
SLV 9	3.78	-2029	-1212	-164.37		136599	0.0495	16250	241			0.2	No, Vu<V
SLV 4	0.67	-2598	-361	-171.75		91950	0.0942	16250	459			1.27	Si
SLV 4	3.78	-1191	-680	396.35		0	0	8333	0			0	No, Vu<V
SLV 5	0.67	8972	1847	1104.85		0	0	8333	0			0	No, Vu<V
SLV 5	3.78	-2118	-2060	-80.76		39639	0.1781	16250	868			0.42	No, Vu<V
SLV 8	0.67	-11508	-1624	-1033.32		1658673	0.0231	16250	113			0.07	No, Vu<V
SLV 8	3.78	-533	1586	503.18		0	0	8333	0			0	No, Vu<V
SLV 7	0.67	-11508	-1624	-1033.32		1658673	0.0231	16250	113			0.07	No, Vu<V
SLV 7	3.78	-533	1586	503.18		0	0	8333	0			0	No, Vu<V
SLV 6	0.67	8972	1847	1104.85		0	0	8333	0			0	No, Vu<V
SLV 6	3.78	-2118	-2060	-80.76		39639	0.1781	16250	868			0.42	No, Vu<V

Verifica a pressoflessione fuori piano D.M. 17-01-18 (N.T.C.)

quota 2.51 Wa 0.05 denominatore 8 γM = 2

Comb.	fd	Sa	σ0	N	M	Mc	Coeff.s.	Verifica
SLV 16	143750	0.3	0	1411	17.71	0	0	No, Trazione
SLV 5	143750	0.3	168018	-9829	17.71	0	0	No, Rottura per schiacciamento
SLV 6	143750	0.3	168018	-9829	17.71	0	0	No, Rottura per schiacciamento
SLV 7	143750	0.3	0	4909	17.71	0	0	No, Trazione
SLV 9	143750	0.3	154925	-9063	17.71	0	0	No, Rottura per schiacciamento
SLV 10	143750	0.3	154925	-9063	17.71	0	0	No, Rottura per schiacciamento
SLV 15	143750	0.3	0	1411	17.71	0	0	No, Trazione
SLV 8	143750	0.3	0	4909	17.71	0	0	No, Trazione
SLV 12	143750	0.3	0	5675	17.71	0	0	No, Trazione
SLV 11	143750	0.3	0	5675	17.71	0	0	No, Trazione

Verifica dei meccanismi locali di collasso con analisi cinematica lineare

forza di aggancio al piano = 0 quota mezzeria = 2.51 Wa = 0.05 Ta = 0.0754

Comb.	N top	N base	V orto	α0	M*	e*	a0*	aLim	Verifica
SLV 2	-453	3546	10	0	0	0	0	9.5486	No, Trazione
SLV 1	-453	3546	10	0	0	0	0	9.5486	No, Trazione
SLV 9	-1320	7479	-32	0	0	0	0	8.44994	No, Trazione
SLV 5	-997	8972	-21	0	0	0	0	8.44994	No, Trazione
SLV 10	-1320	7479	-32	0	0	0	0	8.44994	No, Trazione
SLV 6	-997	8972	-21	0	0	0	0	8.44994	No, Trazione
SLV 4	-309	-2598	26	0.006	63.5	0.894	0.09126	9.5486	No
SLV 3	-309	-2598	26	0.006	63.5	0.894	0.09126	9.5486	No
SLV 7	-520	-11508	32	0.007	84.1	0.91	0.11548	8.44994	No
SLV 8	-520	-11508	32	0.007	84.1	0.91	0.11548	8.44994	No

Tabella dei coefficienti di sicurezza minimi

Stato limite	Coeff.s.	Comb.	Verifica
PF_SLU	0	SLU 1	No
V_SLU	0	SLU 1	No
PF_SLV	0	SLV 10	No
V_SLV	0	SLV 1	No
PFFP_SLV	0	SLV 16	No
R_SLV	0	SLV 10	No

Maschio 99

Verifiche condotte secondo D.M. 17-01-18 (N.T.C.)

Dati geometrici

X ini.	Y ini.	X fin.	Y fin.	Quota i.	Quota.s	l	Sp.	h netta	h ini.	h fin.	a	a.s.,sx	a.s.,dx
-7.723	-3.248	-7.723	-3.499	L3	L4	0.251	0.3	3.68	3.68	3.68			

Caratteristiche del materiale

(Circolare 7 21-01-19 C8.5.I) Muratura in mattoni pieni e malta di calce LC2_Corti

fb	fk	fvk0	fmedio	τ0	fv0	μ	ϕ	fv,lim	E	G	FC
600000			345000	9000	20000	0.58	0.77	32500	320000000	128000000	1.2

Verifica a pressoflessione nel piano secondo D.M. 17-01-18 NTC §7.8.2.2.1 in combinazioni non sismiche, γM = 3

Comb.	Quota	N	M	σ0	Mu	c.s.	Verifica
SLU 1	0.67	-1347	-73.1	17867	132.04	1.806	Si
SLU 1	3.78	-1109	-144.87	0	0	0	No, e>l/2
SLU 58	0.67	-1932	-104.97	25633	166.3	1.584	Si
SLU 58	3.78	-1612	-211.3	0	0	0	No, e>l/2
SLU 51	0.67	-1772	-93.87	23506	158.32	1.687	Si
SLU 51	3.78	-1451	-182.39	0	0	0	No, e>l/2
SLU 56	0.67	-1943	-105.59	25782	166.82	1.58	Si
SLU 56	3.78	-1624	-213.25	0	0	0	No, e>l/2
SLU 53	0.67	-1917	-104.19	25434	165.6	1.589	Si
SLU 53	3.78	-1597	-209.71	0	0	0	No, e>l/2
SLU 59	0.67	-1958	-104.2	25977	167.5	1.607	Si
SLU 59	3.78	-1621	-205.66	0	0	0	No, e>l/2
SLU 49	0.67	-1783	-94.49	23655	158.91	1.682	Si
SLU 49	3.78	-1464	-184.35	0	0	0	No, e>l/2
SLU 54	0.67	-1943	-103.42	25779	166.81	1.613	Si
SLU 54	3.78	-1607	-204.07	0	0	0	No, e>l/2
SLU 50	0.67	-1746	-94.64	23162	156.92	1.658	Si
SLU 50	3.78	-1442	-188.04	0	0	0	No, e>l/2
SLU 57	0.67	-1969	-104.82	26126	168.01	1.603	Si
SLU 57	3.78	-1634	-207.61	0	0	0	No, e>l/2

Verifica a pressoflessione nel piano secondo D.M. 17-01-18 NTC §7.8.2.2.1 in combinazioni sismiche, γM = 2

Comb.	Quota	N	M	σ0	Mu	c.s.	Verifica
SLV 10	0.67	-2481	-137.49	32924	227.7	1.656	Si
SLV 10	3.78	-466	-390.37	0	0	0	No, e>l/2
SLV 4	0.67	-999	-44.16	13250	111.83	2.532	Si
SLV 4	3.78	-2089	-148.23	27715	202.86	1.369	Si
SLV 3	0.67	-999	-44.16	13250	111.83	2.532	Si
SLV 3	3.78	-2089	-148.23	27715	202.86	1.369	Si
SLV 5	0.67	-2390	-126.34	31709	222.28	1.759	Si
SLV 5	3.78	-905	-430.19	0	0	0	No, e>l/2
SLV 14	0.67	-1896	-113.25	25163	189.16	1.67	Si
SLV 14	3.78	-316	-167.07	0	0	0	No, e>l/2
SLV 9	0.67	-2481	-137.49	32924	227.7	1.656	Si
SLV 9	3.78	-466	-390.37	0	0	0	No, e>l/2
SLV 1	0.67	-1591	-76.09	21116	165.35	2.173	Si
SLV 1	3.78	-1778	-299.81	0	0	0	No, e>l/2
SLV 6	0.67	-2390	-126.34	31709	222.28	1.759	Si
SLV 6	3.78	-905	-430.19	0	0	0	No, e>l/2
SLV 13	0.67	-1896	-113.25	25163	189.16	1.67	Si
SLV 13	3.78	-316	-167.07	0	0	0	No, e>l/2
SLV 2	0.67	-1591	-76.09	21116	165.35	2.173	Si
SLV 2	3.78	-1778	-299.81	0	0	0	No, e>l/2

Verifica a taglio nel piano secondo D.M. 17-01-18 (N.T.C.) §7.8.2.2.2 con rottura per scorrimento in combinazioni non sismiche, γM = 3

Comb.	Quota	N	V par	M	σ0	σN	l'	fvd	Vt scorr.	Vt fess.diag.	Vt,lim	c.s.	Verifica
SLU 51	0.67	-1772	-614	-93.87		27105	0.2179	9169	599			0.98	No, Vu<V
SLU 51	3.78	-1451	-141	-182.39		0	0	5556	0			0	No, Vu<V
SLU 58	0.67	-1932	-675	-104.97		30116	0.2138	9571	614			0.91	No, Vu<V
SLU 58	3.78	-1612	-192	-211.3		0	0	5556	0			0	No, Vu<V
SLU 60	0.67	-1959	-683	-106.59		30572	0.2136	9632	617			0.9	No, Vu<V
SLU 60	3.78	-1630	-195	-214.19		0	0	5556	0			0	No, Vu<V
SLU 53	0.67	-1917	-670	-104.19		29890	0.2138	9541	612			0.91	No, Vu<V
SLU 53	3.78	-1597	-192	-209.71		0	0	5556	0			0	No, Vu<V
SLU 57	0.67	-1969	-680	-104.82		30229	0.2171	9586	624			0.92	No, Vu<V
SLU 57	3.78	-1634	-163	-207.61		0	0	5556	0			0	No, Vu<V
SLU 59	0.67	-1958	-676	-104.2		30051	0.2172	9562	623			0.92	No, Vu<V
SLU 59	3.78	-1621	-161	-205.66		0	0	5556	0			0	No, Vu<V
SLU 54	0.67	-1943	-670	-103.42		29825	0.2171	9532	621			0.93	No, Vu<V
SLU 54	3.78	-1607	-161	-204.07		0	0	5556	0			0	No, Vu<V
SLU 50	0.67	-1746	-614	-94.64		27167	0.2142	9178	590			0.96	No, Vu<V
SLU 50	3.78	-1442	-173	-188.04		0	0	5556	0			0	No, Vu<V
SLU 1	0.67	-1347	-472	-73.1		20976	0.214	8352	536			1.13	Si

Comb.	Quota	N	V par	M	σ0	σN	l'	fvd	Vt scorr.	Vt fess.diag.	Vt,lim	c.s.	Verifica
SLU 1	3.78	-1109	-133	-144.87		0	0	5556	0			0	No, Vu<V
SLU 56	0.67	-1943	-679	-105.59		30294	0.2138	9595	615			0.91	No, Vu<V
SLU 56	3.78	-1624	-195	-213.25		0	0	5556	0			0	No, Vu<V

Verifica a taglio nel piano secondo D.M. 17-01-18 (N.T.C.) §7.8.2.2.2 con rottura per scorrimento in combinazioni sismiche, γM = 2

Comb.	Quota	N	V par	M	σ0	σN	l'	fvd	Vt scorr.	Vt fess.diag.	Vt,lim	c.s.	Verifica
SLV 6	0.67	-2390	-980	-126.34		36503	0.2182	15634	1024			1.04	Si
SLV 6	3.78	-905	-1095	-430.19		0	0	8333	0			0	No, Vu<V
SLV 5	0.67	-2390	-980	-126.34		36503	0.2182	15634	1024			1.04	Si
SLV 5	3.78	-905	-1095	-430.19		0	0	8333	0			0	No, Vu<V
SLV 14	0.67	-1896	-1051	-113.25		31977	0.1977	14729	874			0.83	No, Vu<V
SLV 14	3.78	-316	-719	-167.07		0	0	8333	0			0	No, Vu<V
SLV 1	0.67	-1591	-313	-76.09		22729	0.2334	12879	902			2.89	Si
SLV 1	3.78	-1778	-188	-299.81		0	0	8333	0			0	No, Vu<V
SLV 10	0.67	-2481	-1201	-137.49		39273	0.2106	16188	1023			0.85	No, Vu<V
SLV 10	3.78	-466	-1255	-390.37		0	0	8333	0			0	No, Vu<V
SLV 11	0.67	-505	-33	-31.07		8755	0.1924	10084	582			17.74	Si
SLV 11	3.78	-1500	807	114.89		33996	0.1471	15133	668			0.83	No, Vu<V
SLV 12	0.67	-505	-33	-31.07		8755	0.1924	10084	582			17.74	Si
SLV 12	3.78	-1500	807	114.89		33996	0.1471	15133	668			0.83	No, Vu<V
SLV 9	0.67	-2481	-1201	-137.49		39273	0.2106	16188	1023			0.85	No, Vu<V
SLV 9	3.78	-466	-1255	-390.37		0	0	8333	0			0	No, Vu<V
SLV 2	0.67	-1591	-313	-76.09		22729	0.2334	12879	902			2.89	Si
SLV 2	3.78	-1778	-188	-299.81		0	0	8333	0			0	No, Vu<V
SLV 13	0.67	-1896	-1051	-113.25		31977	0.1977	14729	874			0.83	No, Vu<V
SLV 13	3.78	-316	-719	-167.07		0	0	8333	0			0	No, Vu<V

Verifica a pressoflessione fuori piano D.M. 17-01-18 (N.T.C.)

quota 2.51 Wa 0.05 denominatore 8 γM = 2

Comb.	fd	Sa	σ0	N	M	Mc	Coeff.s.	Verifica
SLV 6	143750	0.3	0	855	22.82	0	0	No, Trazione
SLV 10	143750	0.3	0	337	22.82	0	0	No, Trazione
SLV 9	143750	0.3	0	337	22.82	0	0	No, Trazione
SLV 5	143750	0.3	0	855	22.82	0	0	No, Trazione
SLV 2	143750	0.3	10242	-772	22.82	106.08	4.65	Si
SLV 1	143750	0.3	10242	-772	22.82	106.08	4.65	Si
SLV 14	143750	0.3	33147	-2498	22.82	273.07	11.97	Si
SLV 13	143750	0.3	33147	-2498	22.82	273.07	11.97	Si
SLV 3	143750	0.3	35615	-2684	22.82	285.27	12.5	Si
SLV 4	143750	0.3	35615	-2684	22.82	285.27	12.5	Si

Verifica dei meccanismi locali di collasso con analisi cinematica lineare

forza di aggancio al piano = 0 quota mezzeria = 2.51 Wa = 0.05 Ta = 0.0754

Comb.	N top	N base	V orto	α0	M*	e*	a0*	aLim	Verifica
SLV 12	-1122	-505	96	0	153.8	0.931	0	8.44994	No
SLV 11	-1122	-505	96	0	153.8	0.931	0	8.44994	No
SLV 6	-434	-2390	-91	0	85.2	0.896	0	8.44994	No
SLV 13	-443	-1896	-40	0	86.1	0.897	0	9.5486	No
SLV 10	-306	-2481	-99	0	73.1	0.89	0	8.44994	No
SLV 8	-1249	-414	104	0	166.7	0.935	0	8.44994	No
SLV 14	-443	-1896	-40	0	86.1	0.897	0	9.5486	No
SLV 5	-434	-2390	-91	0	85.2	0.896	0	8.44994	No
SLV 9	-306	-2481	-99	0	73.1	0.89	0	8.44994	No
SLV 7	-1249	-414	104	0	166.7	0.935	0	8.44994	No

Tabella dei coefficienti di sicurezza minimi

Stato limite	Coeff.s.	Comb.	Verifica
PF_SLU	0	SLU 1	No
V_SLU	0	SLU 1	No
PF_SLV	0	SLV 1	No
V_SLV	0	SLV 1	No
PFFP_SLV	0	SLV 10	No
R_SLV	0	SLV 5	No

Maschio 100

Verifiche condotte secondo D.M. 17-01-18 (N.T.C.)

Dati geometrici

X ini.	Y ini.	X fin.	Y fin.	Quota i.	Quota.s	l	Sp.	h netta	h ini.	h fin.	a	a.s.,sx	a.s.,dx
-6.268	-3.248	-6.268	1.046	L3	L4	4.294	0.14	3.68	3.68	3.68			

Caratteristiche del materiale

(Circolare 7 21-01-19 C8.5.I) Muratura in mattoni pieni e malta di calce LC2_Corti

fb	fk	fvk0	fmedio	τ0	fv0	μ	ϕ	fv,lim	E	G	FC
600000			345000	9000	20000	0.58	0.77	32500	320000000	128000000	1.2

Verifica a pressoflessione nel piano secondo D.M. 17-01-18 NTC §7.8.2.2.1 in combinazioni non sismiche, γM = 3

Comb.	Quota	N	M	σ0	Mu	c.s.	Verifica
SLU 77	0.67	-51909	-3804.56	86353	0	0	No, Rottura per schiacciamento
SLU 77	4.35	-34742	-267.16	57795	21667.54	81.103	Si
SLU 74	0.67	-51188	-3813.68	85153	0	0	No, Rottura per schiacciamento
SLU 74	4.35	-34133	-334.35	56781	22199.47	66.397	Si

Comb.	Quota	N	M	σ0	Mu	c.s.	Verifica
SLU 75	0.67	-50602	-4104.41	84177	0	0	No, Rottura per schiacciamento
SLU 75	4.35	-33751	114.28	56146	22516.27	197.036	Si
SLU 81	0.67	-52292	-3846.4	86990	0	0	No, Rottura per schiacciamento
SLU 81	4.35	-34668	-365.74	57671	21734.13	59.425	Si
SLU 76	0.67	-49811	-4315.2	82862	0	0	No, Rottura per schiacciamento
SLU 76	4.35	-33149	371.29	55144	22989.68	61.918	Si
SLU 73	0.67	-49089	-4324.32	81662	0	0	No, Rottura per schiacciamento
SLU 73	4.35	-32539	304.11	54130	23436.45	77.066	Si
SLU 79	0.67	-51509	-3821.53	85688	0	0	No, Rottura per schiacciamento
SLU 79	4.35	-34395	-309.22	57217	21974.83	71.064	Si
SLU 80	0.67	-50923	-4112.26	84712	0	0	No, Rottura per schiacciamento
SLU 80	4.35	-34013	139.4	56581	22300.4	159.977	Si
SLU 83	0.67	-53013	-3837.28	88190	0	0	No, Rottura per schiacciamento
SLU 83	4.35	-35277	-298.56	58685	21173.61	70.92	Si
SLU 84	0.67	-52427	-4128.01	87214	0	0	No, Rottura per schiacciamento
SLU 84	4.35	-34895	150.07	58050	21528.75	143.462	Si

Verifica a pressoflessione nel piano secondo D.M. 17-01-18 NTC §7.8.2.2.1 in combinazioni sismiche, γM = 2

Comb.	Quota	N	M	σ0	Mu	c.s.	Verifica
SLV 5	0.67	-40106	-16651.91	66718	39088.41	2.347	Si
SLV 5	4.35	-24373	-200.84	40545	34962.58	174.083	Si
SLV 9	0.67	-39829	-13220.31	66257	39140.88	2.961	Si
SLV 9	4.35	-26491	-594.7	44069	36361.01	61.141	Si
SLV 6	0.67	-40106	-16651.91	66718	39088.41	2.347	Si
SLV 6	4.35	-24373	-200.84	40545	34962.58	174.083	Si
SLV 8	0.67	-29990	7316.97	49890	38096.62	5.207	Si
SLV 8	4.35	-19700	-362.03	32772	30950.22	85.49	Si
SLV 2	0.67	-36888	-12266.34	61365	39421.71	3.214	Si
SLV 2	4.35	-20266	202.25	33713	31504.16	155.767	Si
SLV 12	0.67	-29713	10748.58	49429	37985.39	3.534	Si
SLV 12	4.35	-21818	-755.9	36295	32927.26	43.56	Si
SLV 1	0.67	-36888	-12266.34	61365	39421.71	3.214	Si
SLV 1	4.35	-20266	202.25	33713	31504.16	155.767	Si
SLV 7	0.67	-29990	7316.97	49890	38096.62	5.207	Si
SLV 7	4.35	-19700	-362.03	32772	30950.22	85.49	Si
SLV 11	0.67	-29713	10748.58	49429	37985.39	3.534	Si
SLV 11	4.35	-21818	-755.9	36295	32927.26	43.56	Si
SLV 10	0.67	-39829	-13220.31	66257	39140.88	2.961	Si
SLV 10	4.35	-26491	-594.7	44069	36361.01	61.141	Si

Verifica a taglio nel piano secondo D.M. 17-01-18 (N.T.C.) §7.8.2.2.2 con rottura per scorrimento in combinazioni non sismiche, γM = 3

Comb.	Quota	N	V par	M	σ0	σN	I'	fvd	Vt scorr.	Vt fess.diag.	Vt,lim	c.s.	Verifica
SLU 34	0.67	-41913	-1638	-3420.33		69723	4.2938	10833	6512			3.98	Si
SLU 34	4.35	-27963	-2333	626.52		46518	4.2938	10833	6512			2.79	Si
SLU 65	0.67	-43896	-1528	-4308.85		73023	4.2938	10833	6512			4.26	Si
SLU 65	4.35	-29058	-2317	122.45		48339	4.2938	10833	6512			2.81	Si
SLU 73	0.67	-49089	-1427	-4324.32		81662	4.2938	10833	6512			4.56	Si
SLU 73	4.35	-32539	-2339	304.11		54130	4.2938	10833	6512			2.78	Si
SLU 55	0.67	-44841	-1519	-4340.14		74595	4.2938	10833	6512			4.29	Si
SLU 55	4.35	-29777	-2332	146.96		49535	4.2938	10833	6512			2.79	Si
SLU 2	0.67	-31029	-1835	-3438.93		51618	4.2938	10833	6512			3.55	Si
SLU 2	4.35	-20501	-2269	153.34		34104	4.2938	10103	6073			2.68	Si
SLU 31	0.67	-41191	-1640	-3429.45		68523	4.2938	10833	6512			3.97	Si
SLU 31	4.35	-27354	-2316	559.33		45504	4.2938	10833	6512			2.81	Si
SLU 52	0.67	-44120	-1521	-4349.26		73395	4.2938	10833	6512			4.28	Si
SLU 52	4.35	-29167	-2315	79.77		48521	4.2938	10833	6512			2.81	Si
SLU 5	0.67	-31750	-1833	-3429.81		52818	4.2938	10833	6512			3.55	Si
SLU 5	4.35	-21110	-2286	220.52		35118	4.2938	10238	6154			2.69	Si
SLU 68	0.67	-44618	-1525	-4299.73		74223	4.2938	10833	6512			4.27	Si
SLU 68	4.35	-29667	-2334	189.63		49352	4.2938	10833	6512			2.79	Si
SLU 76	0.67	-49811	-1425	-4315.2		82862	4.2938	10833	6512			4.57	Si
SLU 76	4.35	-33149	-2356	371.29		55144	4.2938	10833	6512			2.76	Si

Verifica a taglio nel piano secondo D.M. 17-01-18 (N.T.C.) §7.8.2.2.2 con rottura per scorrimento in combinazioni sismiche, γM = 2

Comb.	Quota	N	V par	M	σ0	σN	I'	fvd	Vt scorr.	Vt fess.diag.	Vt,lim	c.s.	Verifica
SLV 9	0.67	-39829	-14393	-13220.31		66257	4.2938	16250	9768			0.68	No, Vu<V
SLV 9	4.35	-26491	-12219	-594.7		44069	4.2938	16250	9768			0.8	No, Vu<V
SLV 15	0.67	-32931	6719	6363		54782	4.2938	16250	9768			1.45	Si
SLV 15	4.35	-25925	4500	-1158.99		43127	4.2938	16250	9768			2.17	Si
SLV 7	0.67	-29990	16140	7316.97		49890	4.2938	16250	9768			0.61	No, Vu<V
SLV 7	4.35	-19700	11977	-362.03		32772	4.2938	14888	8949			0.75	No, Vu<V
SLV 12	0.67	-29713	16837	10748.58		49429	4.2938	16250	9768			0.58	No, Vu<V
SLV 12	4.35	-21818	12523	-755.9		36295	4.2938	15592	9373			0.75	No, Vu<V
SLV 10	0.67	-39829	-14393	-13220.31		66257	4.2938	16250	9768			0.68	No, Vu<V
SLV 10	4.35	-26491	-12219	-594.7		44069	4.2938	16250	9768			0.8	No, Vu<V
SLV 8	0.67	-29990	16140	7316.97		49890	4.2938	16250	9768			0.61	No, Vu<V
SLV 8	4.35	-19700	11977	-362.03		32772	4.2938	14888	8949			0.75	No, Vu<V
SLV 6	0.67	-40106	-15089	-16651.91		66718	4.2938	16250	9768			0.65	No, Vu<V
SLV 6	4.35	-24373	-12765	-200.84		40545	4.2938	16250	9768			0.77	No, Vu<V
SLV 11	0.67	-29713	16837	10748.58		49429	4.2938	16250	9768			0.58	No, Vu<V
SLV 11	4.35	-21818	12523	-755.9		36295	4.2938	15592	9373			0.75	No, Vu<V
SLV 16	0.67	-32931	6719	6363		54782	4.2938	16250	9768			1.45	Si
SLV 16	4.35	-25925	4500	-1158.99		43127	4.2938	16250	9768			2.17	Si

Comb.	Quota	N	V par	M	σ0	σN	l'	fvd	Vt scorr.	Vt fess.diag.	Vt,lim	c.s.	Verifica
SLV 5	0.67	-40106	-15089	-16651.91		66718	4.2938	16250	9768			0.65	No, Vu<V
SLV 5	4.35	-24373	-12765	-200.84		40545	4.2938	16250	9768			0.77	No, Vu<V

Verifica a pressoflessione fuori piano D.M. 17-01-18 (N.T.C.)

quota 2.51 Wa 0.03 denominatore 8 γM = 2

Comb.	fd	Sa	σ0	N	M	Mc	Coeff.s.	Verifica
SLV 8	143750	0.3	40928	-24603	199.33	1145.34	5.75	Si
SLV 7	143750	0.3	40928	-24603	199.33	1145.34	5.75	Si
SLV 4	143750	0.3	41561	-24983	199.33	1153.99	5.79	Si
SLV 3	143750	0.3	41561	-24983	199.33	1153.99	5.79	Si
SLV 11	143750	0.3	44111	-26516	199.33	1186.06	5.95	Si
SLV 12	143750	0.3	44111	-26516	199.33	1186.06	5.95	Si
SLV 1	143750	0.3	45285	-27222	199.33	1199.32	6.02	Si
SLV 2	143750	0.3	45285	-27222	199.33	1199.32	6.02	Si
SLV 15	143750	0.3	52169	-31360	199.33	1257.95	6.31	Si
SLV 16	143750	0.3	52169	-31360	199.33	1257.95	6.31	Si

Verifica dei meccanismi locali di collasso con analisi cinematica lineare

forza di aggancio al piano = 0 quota mezzeria = 2.51 Wa = 0.03 Ta = 0.1615

Comb.	N top	N base	V orto	α0	M*	e*	a0*	aLim	Verifica
SLV 13	-27327	-35966	-16	0.02	3093.6	0.969	0.29643	13.74169	No
SLV 14	-27327	-35966	-16	0.02	3093.6	0.969	0.29643	13.74169	No
SLV 16	-25925	-32931	-15	0.02	2950.9	0.968	0.29778	13.74169	No
SLV 15	-25925	-32931	-15	0.02	2950.9	0.968	0.29778	13.74169	No
SLV 9	-26491	-39829	-6	0.02	3008.5	0.969	0.3021	13.74169	No
SLV 10	-26491	-39829	-6	0.02	3008.5	0.969	0.3021	13.74169	No
SLV 1	-20266	-36888	14	0.02	2375	0.961	0.30396	13.74169	No
SLV 2	-20266	-36888	14	0.02	2375	0.961	0.30396	13.74169	No
SLV 4	-18864	-33854	15	0.02	2232.5	0.959	0.30529	13.74169	No
SLV 3	-18864	-33854	15	0.02	2232.5	0.959	0.30529	13.74169	No

Tabella dei coefficienti di sicurezza minimi

Stato limite	Coeff.s.	Comb.	Verifica
PF_SLU	0	SLU 73	No
V_SLU	2.676	SLU 2	Si
PF_SLV	2.347	SLV 5	Si
V_SLV	0.58	SLV 11	No
PFFP_SLV	5.746	SLV 7	Si
R_SLV	0.022	SLV 13	No

Maschio 101

Verifiche condotte secondo D.M. 17-01-18 (N.T.C.)

Dati geometrici

X ini.	Y ini.	X fin.	Y fin.	Quota i.	Quota.s	l	Sp.	h netta	h ini.	h fin.	a	a.s.,sx	a.s.,dx
-7.464	-3.248	-8.554	-3.248	L3	L4	1.09	0.28	3.68	3.68	3.68			

Caratteristiche del materiale

(Circolare 7 21-01-19 C8.5.I) Muratura in mattoni pieni e malta di calce LC2_Corti

fb	fk	fvk0	fmedio	τ0	fv0	μ	ϕ	fv,lim	E	G	FC
600000			345000	9000	20000	0.58	0.77	32500	320000000	128000000	1.2

Verifica a pressoflessione nel piano secondo D.M. 17-01-18 NTC §7.8.2.2.1 in combinazioni non sismiche, γM = 3

Comb.	Quota	N	M	σ0	Mu	c.s.	Verifica
SLU 80	1.57	-18795	-3082.42	61582	2499.46	0.811	No, M>Mu
SLU 80	3.47	-13303	-328.3	43587	3370.68	10.267	Si
SLU 81	1.57	-19357	-3406.99	63425	2335.54	0.686	No, M>Mu
SLU 81	3.47	-13701	-295.88	44893	3351.97	11.329	Si
SLU 84	1.57	-19302	-3184.76	63245	2352.19	0.739	No, M>Mu
SLU 84	3.47	-13700	-323.43	44887	3352.06	10.364	Si
SLU 82	1.57	-19051	-3144.18	62421	2426.58	0.772	No, M>Mu
SLU 82	3.47	-13501	-314.37	44236	3362.25	10.695	Si
SLU 77	1.57	-19217	-3362.77	62965	2377.79	0.707	No, M>Mu
SLU 77	3.47	-13606	-317.46	44580	3357.08	10.575	Si
SLU 78	1.57	-18910	-3099.95	61960	2466.94	0.796	No, M>Mu
SLU 78	3.47	-13406	-335.96	43924	3366.52	10.021	Si
SLU 75	1.57	-18659	-3059.37	61136	2537.01	0.829	No, M>Mu
SLU 75	3.47	-13207	-326.89	43273	3374.15	10.322	Si
SLU 83	1.57	-19609	-3447.58	64249	2257.77	0.655	No, M>Mu
SLU 83	3.47	-13900	-304.94	45543	3340.04	10.953	Si
SLU 74	1.57	-18965	-3322.19	62140	2451.24	0.738	No, M>Mu
SLU 74	3.47	-13407	-308.4	43929	3366.46	10.916	Si
SLU 79	1.57	-19101	-3345.24	62586	2411.86	0.721	No, M>Mu
SLU 79	3.47	-13503	-309.81	44243	3362.14	10.852	Si

Verifica a pressoflessione nel piano secondo D.M. 17-01-18 NTC §7.8.2.2.1 in combinazioni sismiche, γM = 2

Comb.	Quota	N	M	σ0	Mu	c.s.	Verifica
SLV 16	1.57	-14825	-4877.59	48574	4867.66	0.998	No, M>Mu
SLV 16	3.47	-4889	1824.99	16019	2315.21	1.269	Si
SLV 8	1.57	-2712	-1359.57	8885	1370.38	1.008	Si
SLV 8	3.47	160	730.22	0	0	0	No, Trazione
SLV 13	1.57	-20260	-4960.42	66382	5042.98	1.017	Si
SLV 13	3.47	-10704	968.91	35070	4159.14	4.293	Si
SLV 15	1.57	-14825	-4877.59	48574	4867.66	0.998	No, M>Mu
SLV 15	3.47	-4889	1824.99	16019	2315.21	1.269	Si

Comb.	Quota	N	M	σ0	Mu	c.s.	Verifica
SLV 12	1.57	-5376	-2938.67	0	0	0	No, e>l/2
SLV 12	3.47	961	1696.47	0	0	0	No, Trazione
SLV 10	1.57	-23492	-3214.77	76973	4737.79	1.474	Si
SLV 10	3.47	-18421	-1157.14	60357	5080.31	4.39	Si
SLV 9	1.57	-23492	-3214.77	76973	4737.79	1.474	Si
SLV 9	3.47	-18421	-1157.14	60357	5080.31	4.39	Si
SLV 14	1.57	-20260	-4960.42	66382	5042.98	1.017	Si
SLV 14	3.47	-10704	968.91	35070	4159.14	4.293	Si
SLV 7	1.57	-2712	-1359.57	8885	1370.38	1.008	Si
SLV 7	3.47	160	730.22	0	0	0	No, Trazione
SLV 11	1.57	-5376	-2938.67	0	0	0	No, e>l/2
SLV 11	3.47	961	1696.47	0	0	0	No, Trazione

Verifica a taglio nel piano secondo D.M. 17-01-18 (N.T.C.) §7.8.2.2.2 con rottura per scorrimento in combinazioni non sismiche, γM = 3

Comb.	Quota	N	V par	M	σ0	σN	l'	fvd	Vt scorr.	Vt fess.diag.	Vt,lim	c.s.	Verifica
SLU 84	1.57	-19302	-3794	-3184.76		63245	1.09	10833	3306			0.87	No, Vu<V
SLU 84	3.47	-13700	-1177	-323.43		44887	1.09	10833	3306			2.81	Si
SLU 83	1.57	-19609	-4104	-3447.58		64249	1.09	10833	3306			0.81	No, Vu<V
SLU 83	3.47	-13900	-1165	-304.94		45543	1.09	10833	3306			2.84	Si
SLU 81	1.57	-19357	-4058	-3406.99		63425	1.09	10833	3306			0.81	No, Vu<V
SLU 81	3.47	-13701	-1154	-295.88		44893	1.09	10833	3306			2.86	Si
SLU 56	1.57	-17633	-3693	-3078.84		57776	1.09	10833	3306			0.9	No, Vu<V
SLU 56	3.47	-12335	-961	-289.36		40414	1.09	10833	3306			3.44	Si
SLU 79	1.57	-19101	-3984	-3345.24		62586	1.09	10833	3306			0.83	No, Vu<V
SLU 79	3.47	-13503	-1100	-309.81		44243	1.09	10833	3306			3.01	Si
SLU 60	1.57	-17774	-3751	-3123.06		58236	1.09	10833	3306			0.88	No, Vu<V
SLU 60	3.47	-12430	-1014	-267.77		40727	1.09	10833	3306			3.26	Si
SLU 82	1.57	-19051	-3747	-3144.18		62421	1.09	10833	3306			0.88	No, Vu<V
SLU 82	3.47	-13501	-1166	-314.37		44236	1.09	10833	3306			2.83	Si
SLU 62	1.57	-18025	-3797	-3163.64		59060	1.09	10833	3306			0.87	No, Vu<V
SLU 62	3.47	-12629	-1025	-276.83		41378	1.09	10833	3306			3.23	Si
SLU 74	1.57	-18965	-3953	-3322.19		62140	1.09	10833	3306			0.84	No, Vu<V
SLU 74	3.47	-13407	-1091	-308.4		43929	1.09	10833	3306			3.03	Si
SLU 77	1.57	-19217	-4000	-3362.77		62965	1.09	10833	3306			0.83	No, Vu<V
SLU 77	3.47	-13606	-1101	-317.46		44580	1.09	10833	3306			3	Si

Verifica a taglio nel piano secondo D.M. 17-01-18 (N.T.C.) §7.8.2.2.2 con rottura per scorrimento in combinazioni sismiche, γM = 2

Comb.	Quota	N	V par	M	σ0	σN	l'	fvd	Vt scorr.	Vt fess.diag.	Vt,lim	c.s.	Verifica
SLV 9	1.57	-23492	-7106	-3214.77		76973	1.09	16250	4960			0.7	No, Vu<V
SLV 9	3.47	-18421	1518	-1157.14		60357	1.09	16250	4960			3.27	Si
SLV 10	1.57	-23492	-7106	-3214.77		76973	1.09	16250	4960			0.7	No, Vu<V
SLV 10	3.47	-18421	1518	-1157.14		60357	1.09	16250	4960			3.27	Si
SLV 14	1.57	-20260	-8881	-4960.42		80352	0.9005	16250	4097			0.46	No, Vu<V
SLV 14	3.47	-10704	-2059	968.91		35070	1.09	15347	4684			2.27	Si
SLV 16	1.57	-14825	-7216	-4877.59		81711	0.648	16250	2948			0.41	No, Vu<V
SLV 16	3.47	-4889	-3797	1824.99		33894	0.5152	15112	2180			0.57	No, Vu<V
SLV 8	1.57	-2712	1631	-1359.57		74011	0.1309	16250	595			0.37	No, Vu<V
SLV 8	3.47	160	-2947	730.22		0	0	8333	0			0	No, Vu<V
SLV 11	1.57	-5376	-1555	-2938.67		0	0	8333	0			0	No, Vu<V
SLV 11	3.47	961	-4275	1696.47		0	0	8333	0			0	No, Vu<V
SLV 7	1.57	-2712	1631	-1359.57		74011	0.1309	16250	595			0.37	No, Vu<V
SLV 7	3.47	160	-2947	730.22		0	0	8333	0			0	No, Vu<V
SLV 15	1.57	-14825	-7216	-4877.59		81711	0.648	16250	2948			0.41	No, Vu<V
SLV 15	3.47	-4889	-3797	1824.99		33894	0.5152	15112	2180			0.57	No, Vu<V
SLV 13	1.57	-20260	-8881	-4960.42		80352	0.9005	16250	4097			0.46	No, Vu<V
SLV 13	3.47	-10704	-2059	968.91		35070	1.09	15347	4684			2.27	Si
SLV 12	1.57	-5376	-1555	-2938.67		0	0	8333	0			0	No, Vu<V
SLV 12	3.47	961	-4275	1696.47		0	0	8333	0			0	No, Vu<V

Verifica a pressoflessione fuori piano D.M. 17-01-18 (N.T.C.)

quota 2.51 Wa 0.05 denominatore 8 γM = 2

Comb.	fd	Sa	σ0	N	M	Mc	Coeff.s.	Verifica
SLV 8	143750	0.3	3830	-1169	94.6	158.53	1.68	Si
SLV 7	143750	0.3	3830	-1169	94.6	158.53	1.68	Si
SLV 11	143750	0.3	13409	-4092	94.6	510.05	5.39	Si
SLV 12	143750	0.3	13409	-4092	94.6	510.05	5.39	Si
SLV 3	143750	0.3	15597	-4760	94.6	581.36	6.15	Si
SLV 4	143750	0.3	15597	-4760	94.6	581.36	6.15	Si
SLV 1	143750	0.3	35261	-10762	94.6	1071.85	11.33	Si
SLV 2	143750	0.3	35261	-10762	94.6	1071.85	11.33	Si
SLV 9	143750	0.3	78956	-24097	94.6	1193.65	12.62	Si
SLV 10	143750	0.3	78956	-24097	94.6	1193.65	12.62	Si

Verifica dei meccanismi locali di collasso con analisi cinematica lineare

forza di aggancio al piano = 0 quota mezzeria = 2.51 Wa = 0.05 Ta = 0.0808

Comb.	N top	N base	V orto	α0	M*	e*	a0*	aLim	Verifica
SLV 3	-8521	-7865	-39	0.038	1026	0.955	0.57788	10.39734	No
SLV 4	-8521	-7865	-39	0.038	1026	0.955	0.57788	10.39734	No
SLV 1	-11132	-12393	-15	0.04	1291.6	0.963	0.60314	10.39734	No
SLV 2	-11132	-12393	-15	0.04	1291.6	0.963	0.60314	10.39734	No
SLV 14	-6804	-13029	28	0.039	851.7	0.947	0.60387	10.39734	No
SLV 13	-6804	-13029	28	0.039	851.7	0.947	0.60387	10.39734	No
SLV 8	-3959	-2805	-52	0.035	564	0.925	0.55389	9.1791	No
SLV 7	-3959	-2805	-52	0.035	564	0.925	0.55389	9.1791	No
SLV 10	-11366	-18089	41	0.038	1315.4	0.964	0.56999	9.1791	No
SLV 9	-11366	-18089	41	0.038	1315.4	0.964	0.56999	9.1791	No

Tabella dei coefficienti di sicurezza minimi

Stato limite	Coeff.s.	Comb.	Verifica
PF_SLU	0.655	SLU 83	No
V_SLU	0.806	SLU 83	No
PF_SLV	0	SLV 12	No
V_SLV	0	SLV 7	No
PFFP_SLV	1.676	SLV 7	Si
R_SLV	0.056	SLV 3	No

Maschio 102

Verifiche condotte secondo D.M. 17-01-18 (N.T.C.)

Dati geometrici

X ini.	Y ini.	X fin.	Y fin.	Quota i.	Quota.s	l	Sp.	h netta	h ini.	h fin.	a	a.s.,sx	a.s.,dx
-5.158	1.046	-5.158	1.405	L3	L4	0.359	0.14	3.68	3.68	3.68			

Caratteristiche del materiale

(Circolare 7 21-01-19 C8.5.I) Muratura in mattoni pieni e malta di calce LC2_Corti

fb	fk	fvk0	fmedio	τ0	fv0	μ	ϕ	fv,lim	E	G	FC
600000			345000	9000	20000	0.58	0.77	32500	320000000	128000000	1.2

Verifica a pressoflessione nel piano secondo D.M. 17-01-18 NTC §7.8.2.2.1 in combinazioni non sismiche, γM = 3

Comb.	Quota	N	M	σ0	Mu	c.s.	Verifica
SLU 80	0.67	-4320	50.35	85968	0	0	No, Rottura per schiacciamento
SLU 80	2.77	-2977	-35.72	59248	145.69	4.079	Si
SLU 79	0.67	-4388	51.16	87324	0	0	No, Rottura per schiacciamento
SLU 79	2.77	-2990	-37.24	59505	144.63	3.884	Si
SLU 76	0.67	-4189	48.51	83370	0	0	No, Rottura per schiacciamento
SLU 76	2.77	-2923	-33.38	58168	149.99	4.494	Si
SLU 83	0.67	-4527	56.55	90094	0	0	No, Rottura per schiacciamento
SLU 83	2.77	-3053	-42.01	60750	139.28	3.316	Si
SLU 73	0.67	-4104	47.19	81675	0	0	No, Rottura per schiacciamento
SLU 73	2.77	-2877	-32.05	57260	153.41	4.786	Si
SLU 81	0.67	-4442	55.24	88400	0	0	No, Rottura per schiacciamento
SLU 81	2.77	-3007	-40.68	59842	143.22	3.52	Si
SLU 84	0.67	-4459	55.75	88738	0	0	No, Rottura per schiacciamento
SLU 84	2.77	-3040	-40.49	60493	140.42	3.468	Si
SLU 74	0.67	-4342	49.75	86401	0	0	No, Rottura per schiacciamento
SLU 74	2.77	-2979	-35.8	59275	145.58	4.066	Si
SLU 75	0.67	-4274	48.95	85045	0	0	No, Rottura per schiacciamento
SLU 75	2.77	-2966	-34.28	59018	146.63	4.277	Si
SLU 77	0.67	-4427	51.07	88095	0	0	No, Rottura per schiacciamento
SLU 77	2.77	-3024	-37.13	60183	141.76	3.818	Si

Verifica a pressoflessione nel piano secondo D.M. 17-01-18 NTC §7.8.2.2.1 in combinazioni sismiche, γM = 2

Comb.	Quota	N	M	σ0	Mu	c.s.	Verifica
SLV 1	0.67	-132	-192.67	0	0	0	No, e>l/2
SLV 1	2.77	-4189	224.81	83355	238.92	1.063	Si
SLV 6	0.67	931	-425.31	0	0	0	No, Trazione
SLV 6	2.77	-5660	440.25	112643	79.36	0.18	No, M>Mu
SLV 2	0.67	-132	-192.67	0	0	0	No, e>l/2
SLV 2	2.77	-4189	224.81	83355	238.92	1.063	Si
SLV 12	0.67	-6697	480.11	133274	0	0	No, Rottura per schiacciamento
SLV 12	2.77	1569	-475.65	0	0	0	No, Trazione
SLV 9	0.67	-128	-369.75	0	0	0	No, e>l/2
SLV 9	2.77	-4962	370.94	98752	170.82	0.461	No, M>Mu
SLV 8	0.67	-5638	424.55	112193	82.76	0.195	No, M>Mu
SLV 8	2.77	871	-406.34	0	0	0	No, Trazione
SLV 11	0.67	-6697	480.11	133274	0	0	No, Rottura per schiacciamento
SLV 11	2.77	1569	-475.65	0	0	0	No, Trazione
SLV 10	0.67	-128	-369.75	0	0	0	No, e>l/2
SLV 10	2.77	-4962	370.94	98752	170.82	0.461	No, M>Mu
SLV 5	0.67	931	-425.31	0	0	0	No, Trazione
SLV 5	2.77	-5660	440.25	112643	79.36	0.18	No, M>Mu
SLV 7	0.67	-5638	424.55	112193	82.76	0.195	No, M>Mu
SLV 7	2.77	871	-406.34	0	0	0	No, Trazione

Verifica a taglio nel piano secondo D.M. 17-01-18 (N.T.C.) §7.8.2.2.2 con rottura per scorrimento in combinazioni non sismiche, γM = 3

Comb.	Quota	N	V par	M	σ0	σN	l'	fvd	Vt scorr.	Vt fess.diag.	Vt,lim	c.s.	Verifica
SLU 41	0.67	-3918	144	54.27		77975	0.3589	10833	544			3.79	Si
SLU 41	2.77	-2582	146	-41.89		51390	0.3589	10833	544			3.74	Si
SLU 39	0.67	-3833	139	52.96		76281	0.3589	10833	544			3.92	Si
SLU 39	2.77	-2537	141	-40.56		50482	0.3589	10833	544			3.86	Si
SLU 81	0.67	-4442	147	55.24		88400	0.3589	10833	544			3.7	Si
SLU 81	2.77	-3007	150	-40.68		59842	0.3589	10833	544			3.64	Si

Comb.	Quota	N	V par	M	σ0	σN	l'	fvd	Vt scorr.	Vt fess.diag.	Vt,lim	c.s.	Verifica
SLU 83	0.67	-4527	152	56.55		90094	0.3589	10833	544			3.59	Si
SLU 83	2.77	-3053	154	-42.01		60750	0.3589	10833	544			3.53	Si
SLU 79	0.67	-4388	140	51.16		87324	0.3589	10833	544			3.88	Si
SLU 79	2.77	-2990	143	-37.24		59505	0.3589	10833	544			3.81	Si
SLU 84	0.67	-4459	147	55.75		88738	0.3589	10833	544			3.71	Si
SLU 84	2.77	-3040	148	-40.49		60493	0.3589	10833	544			3.68	Si
SLU 82	0.67	-4374	142	54.44		87044	0.3589	10833	544			3.83	Si
SLU 82	2.77	-2994	143	-39.16		59585	0.3589	10833	544			3.8	Si
SLU 74	0.67	-4342	136	49.75		86401	0.3589	10833	544			4.01	Si
SLU 74	2.77	-2979	138	-35.8		59275	0.3589	10833	544			3.93	Si
SLU 42	0.67	-3850	138	53.47		76619	0.3589	10833	544			3.93	Si
SLU 42	2.77	-2569	139	-40.37		51132	0.3589	10833	544			3.91	Si
SLU 77	0.67	-4427	141	51.07		88095	0.3589	10833	544			3.87	Si
SLU 77	2.77	-3024	143	-37.13		60183	0.3589	10833	544			3.8	Si

Verifica a taglio nel piano secondo D.M. 17-01-18 (N.T.C.) §7.8.2.2.2 con rottura per scorrimento in combinazioni sismiche, γM = 2

Comb.	Quota	N	V par	M	σ0	σN	l'	fvd	Vt scorr.	Vt fess.diag.	Vt,lim	c.s.	Verifica
SLV 8	0.67	-5638	1232	424.55		128866	0.3125	16250	711			0.58	No, Vu<V
SLV 8	2.77	871	963	-406.34		0	0	8333	0			0	No, Vu<V
SLV 2	0.67	-132	-526	-192.67		0	0	8333	0			0	No, Vu<V
SLV 2	2.77	-4189	-569	224.81		83355	0.3589	16250	817			1.44	Si
SLV 6	0.67	931	-1220	-425.31		0	0	8333	0			0	No, Vu<V
SLV 6	2.77	-5660	-1016	440.25		132529	0.3051	16250	694			0.68	No, Vu<V
SLV 7	0.67	-5638	1232	424.55		128866	0.3125	16250	711			0.58	No, Vu<V
SLV 7	2.77	871	963	-406.34		0	0	8333	0			0	No, Vu<V
SLV 1	0.67	-132	-526	-192.67		0	0	8333	0			0	No, Vu<V
SLV 1	2.77	-4189	-569	224.81		83355	0.3589	16250	817			1.44	Si
SLV 11	0.67	-6697	1373	480.11		147944	0.3233	16250	736			0.54	No, Vu<V
SLV 11	2.77	1569	1173	-475.65		0	0	8333	0			0	No, Vu<V
SLV 5	0.67	931	-1220	-425.31		0	0	8333	0			0	No, Vu<V
SLV 5	2.77	-5660	-1016	440.25		132529	0.3051	16250	694			0.68	No, Vu<V
SLV 9	0.67	-128	-1079	-369.75		0	0	8333	0			0	No, Vu<V
SLV 9	2.77	-4962	-806	370.94		112828	0.3142	16250	715			0.89	No, Vu<V
SLV 12	0.67	-6697	1373	480.11		147944	0.3233	16250	736			0.54	No, Vu<V
SLV 12	2.77	1569	1173	-475.65		0	0	8333	0			0	No, Vu<V
SLV 10	0.67	-128	-1079	-369.75		0	0	8333	0			0	No, Vu<V
SLV 10	2.77	-4962	-806	370.94		112828	0.3142	16250	715			0.89	No, Vu<V

Verifica a pressoflessione fuori piano D.M. 17-01-18 (N.T.C.)

quota 2.51 Wa 0.03 denominatore 8 γM = 2

Comb.	fd	Sa	σ0	N	M	Mc	Coeff.s.	Verifica
SLV 12	143750	0.3	0	1524	16.66	0	0	No, Trazione
SLV 11	143750	0.3	0	1524	16.66	0	0	No, Trazione
SLV 7	143750	0.3	0	821	16.66	0	0	No, Trazione
SLV 15	143750	0.3	0	65	16.66	0	0	No, Trazione
SLV 16	143750	0.3	0	65	16.66	0	0	No, Trazione
SLV 8	143750	0.3	0	821	16.66	0	0	No, Trazione
SLV 6	143750	0.3	113260	-5691	16.66	29.11	1.75	Si
SLV 5	143750	0.3	113260	-5691	16.66	29.11	1.75	Si
SLV 10	143750	0.3	99265	-4988	16.66	65.51	3.93	Si
SLV 9	143750	0.3	99265	-4988	16.66	65.51	3.93	Si

Verifica dei meccanismi locali di collasso con analisi cinematica lineare

forza di aggancio al piano = 0 quota mezzeria = 2.51 Wa = 0.03 Ta = 0.1615

Comb.	N top	N base	V orto	α0	M*	e*	a0*	aLim	Verifica
SLV 9	688	-128	-1	0	0	0	0	13.74169	No, Trazione
SLV 10	688	-128	-1	0	0	0	0	13.74169	No, Trazione
SLV 6	612	931	1	0	0	0	0	13.74169	No, Trazione
SLV 5	612	931	1	0	0	0	0	13.74169	No, Trazione
SLV 4	-1966	-2103	5	0.018	226.2	0.965	0.27451	13.74169	No
SLV 3	-1966	-2103	5	0.018	226.2	0.965	0.27451	13.74169	No
SLV 7	-3217	-5638	4	0.019	353.6	0.977	0.28114	13.74169	No
SLV 8	-3217	-5638	4	0.019	353.6	0.977	0.28114	13.74169	No
SLV 2	-818	-132	4	0.018	109.6	0.934	0.28132	13.74169	No
SLV 1	-818	-132	4	0.018	109.6	0.934	0.28132	13.74169	No

Tabella dei coefficienti di sicurezza minimi

Stato limite	Coeff.s.	Comb.	Verifica
PF_SLU	0	SLU 73	No
V_SLU	3.527	SLU 83	Si
PF_SLV	0	SLV 16	No
V_SLV	0	SLV 1	No
PFFP_SLV	0	SLV 16	No
R_SLV	0	SLV 10	No

Maschio 103

Verifiche condotte secondo D.M. 17-01-18 (N.T.C.)

Dati geometrici

X ini.	Y ini.	X fin.	Y fin.	Quota i.	Quota.s	l	Sp.	h netta	h ini.	h fin.	a	a.s.,sx	a.s.,dx
-5.158	2.105	-5.158	5.686	L3	L4	3.581	0.14	3.68	3.68	3.68			

Caratteristiche del materiale

(Circolare 7 21-01-19 C8.5.I) Muratura in mattoni pieni e malta di calce LC2_Corti

fb	fk	fvk0	fmedio	τ0	fv0	μ	ϕ	fv,lim	E	G	FC
600000			345000	9000	20000	0.58	0.77	32500	320000000	128000000	1.2

Verifica a pressoflessione nel piano secondo D.M. 17-01-18 NTC §7.8.2.2.1 in combinazioni non sismiche, γM = 3

Comb.	Quota	N	M	σ0	Mu	c.s.	Verifica
SLU 82	0.67	-27266	5366.23	54393	16219.29	3.022	Si
SLU 82	2.77	-24744	2145.36	49362	17455.15	8.136	Si
SLU 77	0.67	-27318	5271.02	54497	16187.94	3.071	Si
SLU 77	2.77	-24940	2173.51	49753	17379.1	7.996	Si
SLU 79	0.67	-27090	5235.27	54040	16324.12	3.118	Si
SLU 79	2.77	-24713	2155.01	49299	17467.18	8.105	Si
SLU 80	0.67	-26964	5300.78	53791	16396.65	3.093	Si
SLU 80	2.77	-24620	2194.94	49114	17501.68	7.974	Si
SLU 84	0.67	-27651	5444.61	55160	15981.78	2.935	Si
SLU 84	2.77	-25198	2174.71	50267	17274.06	7.943	Si
SLU 83	0.67	-27776	5379.1	55410	15901.71	2.956	Si
SLU 83	2.77	-25290	2134.78	50451	17234.87	8.073	Si
SLU 74	0.67	-26934	5192.64	53729	16414.23	3.161	Si
SLU 74	2.77	-24487	2144.16	48848	17549.95	8.185	Si
SLU 81	0.67	-27392	5300.72	54643	16143.44	3.046	Si
SLU 81	2.77	-24837	2105.43	49547	17419.64	8.274	Si
SLU 78	0.67	-27193	5336.53	54247	16262.98	3.047	Si
SLU 78	2.77	-24848	2213.43	49568	17415.46	7.868	Si
SLU 75	0.67	-26809	5258.14	53480	16485.05	3.135	Si
SLU 75	2.77	-24394	2184.08	48664	17582.62	8.05	Si

Verifica a pressoflessione nel piano secondo D.M. 17-01-18 NTC §7.8.2.2.1 in combinazioni sismiche, γM = 2

Comb.	Quota	N	M	σ0	Mu	c.s.	Verifica
SLV 11	0.67	-13344	11228.11	26620	18685.52	1.664	Si
SLV 11	2.77	-21353	-2425.01	42596	24901.22	10.268	Si
SLV 10	0.67	-19988	-3070.28	39873	24106.82	7.852	Si
SLV 10	2.77	-9846	8296.34	19642	14793.79	1.783	Si
SLV 13	0.67	-13429	3162.73	26790	18771.09	5.935	Si
SLV 13	2.77	-11493	7696.38	22926	16714.59	2.172	Si
SLV 15	0.67	-11436	7452.25	22814	16651.48	2.234	Si
SLV 15	2.77	-14945	4479.98	29813	20227.28	4.515	Si
SLV 16	0.67	-11436	7452.25	22814	16651.48	2.234	Si
SLV 16	2.77	-14945	4479.98	29813	20227.28	4.515	Si
SLV 12	0.67	-13344	11228.11	26620	18685.52	1.664	Si
SLV 12	2.77	-21353	-2425.01	42596	24901.22	10.268	Si
SLV 9	0.67	-19988	-3070.28	39873	24106.82	7.852	Si
SLV 9	2.77	-9846	8296.34	19642	14793.79	1.783	Si
SLV 7	0.67	-16973	10175.05	33859	21966.33	2.159	Si
SLV 7	2.77	-23394	-5127.17	46667	25885.69	5.049	Si
SLV 8	0.67	-16973	10175.05	33859	21966.33	2.159	Si
SLV 8	2.77	-23394	-5127.17	46667	25885.69	5.049	Si
SLV 14	0.67	-13429	3162.73	26790	18771.09	5.935	Si
SLV 14	2.77	-11493	7696.38	22926	16714.59	2.172	Si

Verifica a taglio nel piano secondo D.M. 17-01-18 (N.T.C.) §7.8.2.2.2 con rottura per scorrimento in combinazioni non sismiche, γM = 3

Comb.	Quota	N	V par	M	σ0	σN	I'	fvd	Vt scorr.	Vt fess.diag.	Vt,lim	c.s.	Verifica
SLU 84	0.67	-27651	48	5444.61		55160	3.5806	10833	5431			112.15	Si
SLU 84	2.77	-25198	2190	2174.71		50267	3.5806	10833	5431			2.48	Si
SLU 79	0.67	-27090	63	5235.27		54040	3.5806	10833	5431			85.63	Si
SLU 79	2.77	-24713	2153	2155.01		49299	3.5806	10833	5431			2.52	Si
SLU 74	0.67	-26934	4	5192.64		53729	3.5806	10833	5431			1000	Si
SLU 74	2.77	-24487	2073	2144.16		48848	3.5806	10833	5431			2.62	Si
SLU 83	0.67	-27776	3	5379.1		55410	3.5806	10833	5431			1000	Si
SLU 83	2.77	-25290	2149	2134.78		50451	3.5806	10833	5431			2.53	Si
SLU 80	0.67	-26964	109	5300.78		53791	3.5806	10833	5431			49.92	Si
SLU 80	2.77	-24620	2194	2194.94		49114	3.5806	10833	5431			2.48	Si
SLU 78	0.67	-27193	102	5336.53		54247	3.5806	10833	5431			53.14	Si
SLU 78	2.77	-24848	2204	2213.43		49568	3.5806	10833	5431			2.46	Si
SLU 75	0.67	-26809	49	5258.14		53480	3.5806	10833	5431			110.61	Si
SLU 75	2.77	-24394	2114	2184.08		48664	3.5806	10833	5431			2.57	Si
SLU 76	0.67	-26496	86	5266.06		52857	3.5806	10833	5431			63.19	Si
SLU 76	2.77	-24105	2132	2192.2		48086	3.5806	10833	5431			2.55	Si
SLU 82	0.67	-27266	-5	5366.23		54393	3.5806	10833	5431			1000	Si
SLU 82	2.77	-24744	2100	2145.36		49362	3.5806	10833	5431			2.59	Si
SLU 77	0.67	-27318	57	5271.02		54497	3.5806	10833	5431			95.57	Si
SLU 77	2.77	-24940	2163	2173.51		49753	3.5806	10833	5431			2.51	Si

Verifica a taglio nel piano secondo D.M. 17-01-18 (N.T.C.) §7.8.2.2.2 con rottura per scorrimento in combinazioni sismiche, γM = 2

Comb.	Quota	N	V par	M	σ0	σN	I'	fvd	Vt scorr.	Vt fess.diag.	Vt,lim	c.s.	Verifica
SLV 11	0.67	-13344	15208	11228.11		33484	2.8467	15030	5990			0.39	No, Vu<V
SLV 11	2.77	-21353	15078	-2425.01		42596	3.5806	16250	8146			0.54	No, Vu<V
SLV 6	0.67	-23616	-15259	-4123.34		47112	3.5806	16250	8146			0.53	No, Vu<V
SLV 6	2.77	-11887	-12329	5594.18		23713	3.5806	13076	6555			0.53	No, Vu<V
SLV 8	0.67	-16973	15326	10175.05		33936	3.5724	15121	7562			0.49	No, Vu<V
SLV 8	2.77	-23394	14151	-5127.17		46667	3.5806	16250	8146			0.58	No, Vu<V
SLV 5	0.67	-23616	-15259	-4123.34		47112	3.5806	16250	8146			0.53	No, Vu<V
SLV 5	2.77	-11887	-12329	5594.18		23713	3.5806	13076	6555			0.53	No, Vu<V
SLV 10	0.67	-19988	-15377	-3070.28		39873	3.5806	16250	8146			0.53	No, Vu<V
SLV 10	2.77	-9846	-11402	8296.34		24737	2.8431	13281	5286			0.46	No, Vu<V
SLV 15	0.67	-11436	4366	7452.25		23913	3.416	13116	6273			1.44	Si
SLV 15	2.77	-14945	6891	4479.98		29813	3.5806	14296	7166			1.04	Si
SLV 16	0.67	-11436	4366	7452.25		23913	3.416	13116	6273			1.44	Si
SLV 16	2.77	-14945	6891	4479.98		29813	3.5806	14296	7166			1.04	Si
SLV 12	0.67	-13344	15208	11228.11		33484	2.8467	15030	5990			0.39	No, Vu<V
SLV 12	2.77	-21353	15078	-2425.01		42596	3.5806	16250	8146			0.54	No, Vu<V
SLV 9	0.67	-19988	-15377	-3070.28		39873	3.5806	16250	8146			0.53	No, Vu<V
SLV 9	2.77	-9846	-11402	8296.34		24737	2.8431	13281	5286			0.46	No, Vu<V
SLV 7	0.67	-16973	15326	10175.05		33936	3.5724	15121	7562			0.49	No, Vu<V
SLV 7	2.77	-23394	14151	-5127.17		46667	3.5806	16250	8146			0.58	No, Vu<V

Verifica a pressoflessione fuori piano D.M. 17-01-18 (N.T.C.)

quota 2.51 Wa 0.03 denominatore 8 γM = 2

Comb.	fd	Sa	σ0	N	M	Mc	Coeff.s.	Verifica
SLV 9	143750	0.3	23477	-11769	166.22	665.52	4	Si
SLV 10	143750	0.3	23477	-11769	166.22	665.52	4	Si
SLV 13	143750	0.3	23882	-11972	166.22	674.23	4.06	Si
SLV 14	143750	0.3	23882	-11972	166.22	674.23	4.06	Si
SLV 6	143750	0.3	27956	-14014	166.22	756.54	4.55	Si
SLV 5	143750	0.3	27956	-14014	166.22	756.54	4.55	Si
SLV 16	143750	0.3	28710	-14392	166.22	770.72	4.64	Si
SLV 15	143750	0.3	28710	-14392	166.22	770.72	4.64	Si
SLV 1	143750	0.3	38814	-19457	166.22	929.34	5.59	Si
SLV 2	143750	0.3	38814	-19457	166.22	929.34	5.59	Si

Verifica dei meccanismi locali di collasso con analisi cinematica lineare

forza di aggancio al piano = 0 quota mezzeria = 2.51 Wa = 0.03 Ta = 0.1615

Comb.	N top	N base	V orto	α0	M*	e*	a0*	aLim	Verifica
SLV 1	-14285	-25524	-27	0.019	1714.7	0.955	0.29398	13.74169	No
SLV 2	-14285	-25524	-27	0.019	1714.7	0.955	0.29398	13.74169	No
SLV 16	-14158	-11436	27	0.019	1701.8	0.955	0.29411	13.74169	No
SLV 15	-14158	-11436	27	0.019	1701.8	0.955	0.29411	13.74169	No
SLV 11	-15188	-13344	25	0.019	1806.4	0.957	0.29505	13.74169	No
SLV 12	-15188	-13344	25	0.019	1806.4	0.957	0.29505	13.74169	No
SLV 5	-13255	-23616	-25	0.019	1610	0.953	0.2973	13.74169	No
SLV 6	-13255	-23616	-25	0.019	1610	0.953	0.2973	13.74169	No
SLV 3	-14935	-23531	-16	0.02	1780.7	0.957	0.30332	13.74169	No
SLV 4	-14935	-23531	-16	0.02	1780.7	0.957	0.30332	13.74169	No

Tabella dei coefficienti di sicurezza minimi

Stato limite	Coeff.s.	Comb.	Verifica
PF_SLU	2.935	SLU 84	Si
V_SLU	2.464	SLU 78	Si
PF_SLV	1.664	SLV 11	Si
V_SLV	0.394	SLV 11	No
PFFP_SLV	4.004	SLV 9	Si
R_SLV	0.021	SLV 1	No

Maschio 104

Verifiche condotte secondo D.M. 17-01-18 (N.T.C.)

Dati geometrici

X ini.	Y ini.	X fin.	Y fin.	Quota i.	Quota.s	l	Sp.	h netta	h ini.	h fin.	a	a.s.,sx	a.s.,dx
-5.105	5.83	-5.105	6.536	L3	L4	0.705	0.28	3.68	3.68	3.68			

Caratteristiche del materiale

(Circolare 7 21-01-19 C8.5.I) Muratura in mattoni pieni e malta di calce LC2_Corti

fb	fk	fvk0	fmedio	τ0	fv0	μ	ϕ	fv,lim	E	G	FC
600000			345000	9000	20000	0.58	0.77	32500	320000000	128000000	1.2

Verifica a pressoflessione nel piano secondo D.M. 17-01-18 NTC §7.8.2.2.1 in combinazioni non sismiche, γM = 3

Comb.	Quota	N	M	σ0	Mu	c.s.	Verifica
SLU 62	0.67	-16148	622.87	81768	0	0	No, Rottura per schiacciamento
SLU 62	4.35	-8635	183.54	43723	1410.63	7.685	Si
SLU 74	0.67	-17175	661.36	86968	0	0	No, Rottura per schiacciamento
SLU 74	4.35	-9245	196.52	46812	1386.65	7.056	Si
SLU 82	0.67	-17516	678.93	88695	0	0	No, Rottura per schiacciamento
SLU 82	4.35	-9342	201.31	47306	1381.31	6.862	Si
SLU 75	0.67	-17200	665.64	87095	0	0	No, Rottura per schiacciamento
SLU 75	4.35	-9241	195.89	46794	1386.84	7.08	Si
SLU 78	0.67	-17459	676.64	88404	0	0	No, Rottura per schiacciamento
SLU 78	4.35	-9442	199.91	47810	1375.42	6.88	Si
SLU 73	0.67	-16824	652.95	85190	0	0	No, Rottura per schiacciamento
SLU 73	4.35	-8947	189.93	45305	1400.39	7.373	Si
SLU 83	0.67	-17749	685.64	89877	0	0	No, Rottura per schiacciamento
SLU 83	4.35	-9547	205.95	48340	1368.76	6.646	Si
SLU 76	0.67	-17082	663.94	86499	0	0	No, Rottura per schiacciamento
SLU 76	4.35	-9148	193.94	46321	1391.55	7.175	Si
SLU 84	0.67	-17775	689.93	90004	0	0	No, Rottura per schiacciamento
SLU 84	4.35	-9543	205.32	48322	1369	6.668	Si
SLU 63	0.67	-16173	627.16	81896	0	0	No, Rottura per schiacciamento
SLU 63	4.35	-8631	182.92	43705	1410.72	7.712	Si

Verifica a pressoflessione nel piano secondo D.M. 17-01-18 NTC §7.8.2.2.1 in combinazioni sismiche, γM = 2

Comb.	Quota	N	M	σ0	Mu	c.s.	Verifica
SLV 12	0.67	-19756	1327.44	100035	1263.11	0.952	No, M>Mu
SLV 12	4.35	-9905	18.52	50156	2059.24	111.187	Si

Comb.	Quota	N	M	σ0	Mu	c.s.	Verifica
SLV 16	0.67	-16056	714.74	81304	1894.63	2.651	Si
SLV 16	4.35	-8071	345.42	40870	1894.3	5.484	Si
SLV 11	0.67	-19756	1327.44	100035	1263.11	0.952	No, M>Mu
SLV 11	4.35	-9905	18.52	50156	2059.24	111.187	Si
SLV 8	0.67	-18503	1326.65	93693	1521.71	1.147	Si
SLV 8	4.35	-9424	-145.75	47721	2025.5	13.897	Si
SLV 6	0.67	-3759	-426.56	19036	1119.21	2.624	Si
SLV 6	4.35	-2582	240.68	13073	813.06	3.378	Si
SLV 10	0.67	-5012	-425.76	25378	1400.35	3.289	Si
SLV 10	4.35	-3063	404.95	15508	942.97	2.329	Si
SLV 5	0.67	-3759	-426.56	19036	1119.21	2.624	Si
SLV 5	4.35	-2582	240.68	13073	813.06	3.378	Si
SLV 9	0.67	-5012	-425.76	25378	1400.35	3.289	Si
SLV 9	4.35	-3063	404.95	15508	942.97	2.329	Si
SLV 15	0.67	-16056	714.74	81304	1894.63	2.651	Si
SLV 15	4.35	-8071	345.42	40870	1894.3	5.484	Si
SLV 7	0.67	-18503	1326.65	93693	1521.71	1.147	Si
SLV 7	4.35	-9424	-145.75	47721	2025.5	13.897	Si

Verifica a taglio nel piano secondo D.M. 17-01-18 (N.T.C.) §7.8.2.2.2 con rottura per scorrimento in combinazioni non sismiche, γM = 3

Comb.	Quota	N	V par	M	σ0	σN	I'	fvd	Vt scorr.	Vt fess.diag.	Vt,lim	c.s.	Verifica
SLU 74	0.67	-17175	822	661.36		86968	0.7053	10833	2139			2.6	Si
SLU 74	4.35	-9245	-1343	196.52		46812	0.7053	10833	2139			1.59	Si
SLU 80	0.67	-17324	833	672.08		87723	0.7053	10833	2139			2.57	Si
SLU 80	4.35	-9351	-1352	198.37		47350	0.7053	10833	2139			1.58	Si
SLU 77	0.67	-17433	833	672.35		88276	0.7053	10833	2139			2.57	Si
SLU 77	4.35	-9446	-1371	200.53		47829	0.7053	10833	2139			1.56	Si
SLU 78	0.67	-17459	840	676.64		88404	0.7053	10833	2139			2.55	Si
SLU 78	4.35	-9442	-1363	199.91		47810	0.7053	10833	2139			1.57	Si
SLU 83	0.67	-17749	841	685.64		89877	0.7053	10833	2139			2.54	Si
SLU 83	4.35	-9547	-1405	205.95		48340	0.7053	10833	2139			1.52	Si
SLU 79	0.67	-17299	826	667.79		87595	0.7053	10833	2139			2.59	Si
SLU 79	4.35	-9355	-1360	198.99		47368	0.7053	10833	2139			1.57	Si
SLU 75	0.67	-17200	829	665.64		87095	0.7053	10833	2139			2.58	Si
SLU 75	4.35	-9241	-1335	195.89		46794	0.7053	10833	2139			1.6	Si
SLU 84	0.67	-17775	848	689.93		90004	0.7053	10833	2139			2.52	Si
SLU 84	4.35	-9543	-1397	205.32		48322	0.7053	10833	2139			1.53	Si
SLU 81	0.67	-17491	830	674.65		88568	0.7053	10833	2139			2.58	Si
SLU 81	4.35	-9346	-1378	201.94		47324	0.7053	10833	2139			1.55	Si
SLU 82	0.67	-17516	837	678.93		88695	0.7053	10833	2139			2.56	Si
SLU 82	4.35	-9342	-1370	201.31		47306	0.7053	10833	2139			1.56	Si

Verifica a taglio nel piano secondo D.M. 17-01-18 (N.T.C.) §7.8.2.2.2 con rottura per scorrimento in combinazioni sismiche, γM = 2

Comb.	Quota	N	V par	M	σ0	σN	I'	fvd	Vt scorr.	Vt fess.diag.	Vt,lim	c.s.	Verifica
SLV 13	0.67	-11633	-3725	188.78		58907	0.7053	16250	3209			0.86	No, Vu<V
SLV 13	4.35	-6018	-3966	461.35		30475	0.7053	14428	2849			0.72	No, Vu<V
SLV 7	0.67	-18503	6143	1326.65		93693	0.7053	16250	3209			0.52	No, Vu<V
SLV 7	4.35	-9424	1892	-145.75		47721	0.7053	16250	3209			1.7	Si
SLV 11	0.67	-19756	4410	1327.44		100035	0.7053	16250	3209			0.73	No, Vu<V
SLV 11	4.35	-9905	414	18.52		50156	0.7053	16250	3209			7.75	Si
SLV 9	0.67	-5012	-4995	-425.76		25378	0.7053	13409	2648			0.53	No, Vu<V
SLV 9	4.35	-3063	-3671	404.95		16540	0.6613	11641	2156			0.59	No, Vu<V
SLV 10	0.67	-5012	-4995	-425.76		25378	0.7053	13409	2648			0.53	No, Vu<V
SLV 10	4.35	-3063	-3671	404.95		16540	0.6613	11641	2156			0.59	No, Vu<V
SLV 3	0.67	-11882	4873	712.1		60164	0.7053	16250	3209			0.66	No, Vu<V
SLV 3	4.35	-6468	2187	-202.15		32753	0.7053	14884	2939			1.34	Si
SLV 12	0.67	-19756	4410	1327.44		100035	0.7053	16250	3209			0.73	No, Vu<V
SLV 12	4.35	-9905	414	18.52		50156	0.7053	16250	3209			7.75	Si
SLV 14	0.67	-11633	-3725	188.78		58907	0.7053	16250	3209			0.86	No, Vu<V
SLV 14	4.35	-6018	-3966	461.35		30475	0.7053	14428	2849			0.72	No, Vu<V
SLV 4	0.67	-11882	4873	712.1		60164	0.7053	16250	3209			0.66	No, Vu<V
SLV 4	4.35	-6468	2187	-202.15		32753	0.7053	14884	2939			1.34	Si
SLV 8	0.67	-18503	6143	1326.65		93693	0.7053	16250	3209			0.52	No, Vu<V
SLV 8	4.35	-9424	1892	-145.75		47721	0.7053	16250	3209			1.7	Si

Verifica a pressoflessione fuori piano D.M. 17-01-18 (N.T.C.)

quota 2.51 Wa 0.05 denominatore 8 γM = 2

Comb.	fd	Sa	σ0	N	M	Mc	Coeff.s.	Verifica
SLV 5	143750	0.3	12129	-2395	62.64	302.06	4.82	Si
SLV 6	143750	0.3	12129	-2395	62.64	302.06	4.82	Si
SLV 10	143750	0.3	15505	-3062	62.64	374.29	5.98	Si
SLV 9	143750	0.3	15505	-3062	62.64	374.29	5.98	Si
SLV 1	143750	0.3	26126	-5160	62.64	567.88	9.07	Si
SLV 2	143750	0.3	26126	-5160	62.64	567.88	9.07	Si
SLV 14	143750	0.3	37380	-7382	62.64	717.32	11.45	Si
SLV 13	143750	0.3	37380	-7382	62.64	717.32	11.45	Si
SLV 3	143750	0.3	41499	-8196	62.64	757.69	12.1	Si
SLV 4	143750	0.3	41499	-8196	62.64	757.69	12.1	Si

Verifica dei meccanismi locali di collasso con analisi cinematica lineare

forza di aggancio al piano = 0 quota mezzeria = 2.51 Wa = 0.05 Ta = 0.0808

Comb.	N top	N base	V orto	α0	M*	e*	a0*	aLim	Verifica
SLV 15	-8071	-16056	-4	0.04	924.1	0.966	0.60871	10.39734	No
SLV 16	-8071	-16056	-4	0.04	924.1	0.966	0.60871	10.39734	No
SLV 4	-6468	-11882	-3	0.041	761	0.96	0.62224	10.39734	No
SLV 3	-6468	-11882	-3	0.041	761	0.96	0.62224	10.39734	No
SLV 13	-6018	-11633	-2	0.041	715.2	0.958	0.62929	10.39734	No
SLV 14	-6018	-11633	-2	0.041	715.2	0.958	0.62929	10.39734	No
SLV 2	-4416	-7458	-2	0.043	552.4	0.947	0.65469	10.39734	No
SLV 1	-4416	-7458	-2	0.043	552.4	0.947	0.65469	10.39734	No

Comb.	N top	N base	V orto	α0	M*	e*	a0*	aLim	Verifica
SLV 12	-9905	-19756	-5	0.04	1110.8	0.972	0.59671	9.1791	No
SLV 11	-9905	-19756	-5	0.04	1110.8	0.972	0.59671	9.1791	No

Tabella dei coefficienti di sicurezza minimi

Stato limite	Coeff.s.	Comb.	Verifica
PF_SLU	0	SLU 62	No
V_SLU	1.523	SLU 83	Si
PF_SLV	0.952	SLV 11	No
V_SLV	0.522	SLV 7	No
PFFP_SLV	4.822	SLV 5	Si
R_SLV	0.059	SLV 15	No

Maschio 105

Verifiche condotte secondo D.M. 17-01-18 (N.T.C.)

Dati geometrici

X ini.	Y ini.	X fin.	Y fin.	Quota i.	Quota.s	l	Sp.	h netta	h ini.	h fin.	a	a.s.,sx	a.s.,dx
-5.954	-3.248	-6.464	-3.248	L3	L4	0.51	0.28	3.68	3.68	3.68			

Caratteristiche del materiale

(Circolare 7 21-01-19 C8.5.I) Muratura in mattoni pieni e malta di calce LC2_Corti

fb	fk	fvk0	fmedio	τ0	fv0	μ	ϕ	fv,lim	E	G	FC
600000			345000	9000	20000	0.58	0.77	32500	320000000	128000000	1.2

Verifica a pressoflessione nel piano secondo D.M. 17-01-18 NTC §7.8.2.2.1 in combinazioni non sismiche, γM = 3

Comb.	Quota	N	M	σ0	Mu	c.s.	Verifica
SLU 60	2.67	-13110	-231.39	91809	0	0	No, Rottura per schiacciamento
SLU 60	3.47	-13758	159.09	96344	0	0	No, Rottura per schiacciamento
SLU 57	2.67	-12821	-325.83	89785	0	0	No, Rottura per schiacciamento
SLU 57	3.47	-13244	223.57	92745	0	0	No, Rottura per schiacciamento
SLU 42	2.67	-12148	-309.58	85073	0	0	No, Rottura per schiacciamento
SLU 42	3.47	-12629	216.2	88440	0	0	No, Rottura per schiacciamento
SLU 56	2.67	-13001	-228.71	91043	0	0	No, Rottura per schiacciamento
SLU 56	3.47	-13622	151.37	95393	0	0	No, Rottura per schiacciamento
SLU 63	2.67	-13122	-331.89	91888	0	0	No, Rottura per schiacciamento
SLU 63	3.47	-13581	232.54	95107	0	0	No, Rottura per schiacciamento
SLU 59	2.67	-12723	-325.14	89096	0	0	No, Rottura per schiacciamento
SLU 59	3.47	-13140	224.87	92013	0	0	No, Rottura per schiacciamento
SLU 58	2.67	-12903	-228.02	90354	0	0	No, Rottura per schiacciamento
SLU 58	3.47	-13518	152.66	94661	0	0	No, Rottura per schiacciamento
SLU 55	2.67	-12412	-386.52	86920	0	0	No, Rottura per schiacciamento
SLU 55	3.47	-12686	271.76	88837	0	0	No, Rottura per schiacciamento
SLU 61	2.67	-12931	-328.51	90551	0	0	No, Rottura per schiacciamento
SLU 61	3.47	-13380	231.3	93696	0	0	No, Rottura per schiacciamento
SLU 62	2.67	-13301	-234.76	93147	0	0	No, Rottura per schiacciamento
SLU 62	3.47	-13960	160.34	97755	0	0	No, Rottura per schiacciamento

Verifica a pressoflessione nel piano secondo D.M. 17-01-18 NTC §7.8.2.2.1 in combinazioni sismiche, γM = 2

Comb.	Quota	N	M	σ0	Mu	c.s.	Verifica
SLV 15	2.67	-10804	-951.98	75657	1049.14	1.102	Si
SLV 15	3.47	-11148	1320.8	78065	1026.51	0.777	No, M>Mu
SLV 16	2.67	-10804	-951.98	75657	1049.14	1.102	Si
SLV 16	3.47	-11148	1320.8	78065	1026.51	0.777	No, M>Mu
SLV 4	2.67	-5820	731.42	40753	989.05	1.352	Si
SLV 4	3.47	-6643	-1100.13	46518	1049.03	0.954	No, M>Mu
SLV 1	2.67	-8518	614.12	59650	1111.73	1.81	Si
SLV 1	3.47	-9080	-1098.17	63583	1110.5	1.011	Si
SLV 10	2.67	-14906	-616.94	104383	553.88	0.898	No, M>Mu
SLV 10	3.47	-14851	477.73	103997	563.77	1.18	Si
SLV 9	2.67	-14906	-616.94	104383	553.88	0.898	No, M>Mu
SLV 9	3.47	-14851	477.73	103997	563.77	1.18	Si
SLV 13	2.67	-13502	-1069.28	94553	778.7	0.728	No, M>Mu
SLV 13	3.47	-13585	1322.76	95130	767.1	0.58	No, M>Mu
SLV 14	2.67	-13502	-1069.28	94553	778.7	0.728	No, M>Mu
SLV 14	3.47	-13585	1322.76	95130	767.1	0.58	No, M>Mu
SLV 2	2.67	-8518	614.12	59650	1111.73	1.81	Si
SLV 2	3.47	-9080	-1098.17	63583	1110.5	1.011	Si
SLV 3	2.67	-5820	731.42	40753	989.05	1.352	Si

Comb.	Quota	N	M	σ0	Mu	c.s.	Verifica
SLV 3	3.47	-6643	-1100.13	46518	1049.03	0.954	No, M>Mu

Verifica a taglio nel piano secondo D.M. 17-01-18 (N.T.C.) §7.8.2.2.2 con rottura per scorrimento in combinazioni non sismiche, γM = 3

Comb.	Quota	N	V par	M	σ0	σN	I'	fvd	Vt scorr.	Vt fess.diag.	Vt,lim	c.s.	Verifica
SLU 44	2.67	-10845	-730	-359.54		75946	0.51	10833	1547			2.12	Si
SLU 44	3.47	-10983	-732	249.69		76914	0.51	10833	1547			2.11	Si
SLU 34	2.67	-11439	-736	-364.21		80104	0.51	10833	1547			2.1	Si
SLU 34	3.47	-11734	-738	255.41		82170	0.51	10833	1547			2.1	Si
SLU 52	2.67	-12221	-777	-383.15		85582	0.51	10833	1547			1.99	Si
SLU 52	3.47	-12484	-778	270.52		87425	0.51	10833	1547			1.99	Si
SLU 65	2.67	-12110	-759	-377.99		84804	0.51	10833	1547			2.04	Si
SLU 65	3.47	-12351	-761	260.38		86489	0.51	10833	1547			2.03	Si
SLU 76	2.67	-13677	-810	-404.97		95778	0.51	10833	1547			1.91	Si
SLU 76	3.47	-14053	-812	282.44		98412	0.51	10833	1547			1.91	Si
SLU 55	2.67	-12412	-782	-386.52		86920	0.51	10833	1547			1.98	Si
SLU 55	3.47	-12686	-783	271.76		88837	0.51	10833	1547			1.98	Si
SLU 68	2.67	-12301	-764	-381.36		86141	0.51	10833	1547			2.02	Si
SLU 68	3.47	-12552	-766	261.62		87900	0.51	10833	1547			2.02	Si
SLU 31	2.67	-11248	-731	-360.84		78766	0.51	10833	1547			2.12	Si
SLU 31	3.47	-11532	-733	254.17		80758	0.51	10833	1547			2.11	Si
SLU 47	2.67	-11036	-735	-362.91		77283	0.51	10833	1547			2.1	Si
SLU 47	3.47	-11185	-737	250.94		78325	0.51	10833	1547			2.1	Si
SLU 73	2.67	-13486	-805	-401.59		94440	0.51	10833	1547			1.92	Si
SLU 73	3.47	-13852	-807	281.2		97001	0.51	10833	1547			1.92	Si

Verifica a taglio nel piano secondo D.M. 17-01-18 (N.T.C.) §7.8.2.2.2 con rottura per scorrimento in combinazioni sismiche, γM = 2

Comb.	Quota	N	V par	M	σ0	σN	I'	fvd	Vt scorr.	Vt fess.diag.	Vt,lim	c.s.	Verifica
SLV 4	2.67	-5820	2501	731.42		53573	0.388	16250	1765			0.71	No, Vu<V
SLV 4	3.47	-6643	2491	-1100.13		88469	0.2682	16250	1220			0.49	No, Vu<V
SLV 2	2.67	-8518	2034	614.12		59650	0.51	16250	2321			1.14	Si
SLV 2	3.47	-9080	2218	-1098.17		80633	0.4022	16250	1830			0.82	No, Vu<V
SLV 3	2.67	-5820	2501	731.42		53573	0.388	16250	1765			0.71	No, Vu<V
SLV 3	3.47	-6643	2491	-1100.13		88469	0.2682	16250	1220			0.49	No, Vu<V
SLV 15	2.67	-10804	-2637	-951.98		77069	0.5007	16250	2278			0.86	No, Vu<V
SLV 15	3.47	-11148	-2820	1320.8		97210	0.4096	16250	1864			0.66	No, Vu<V
SLV 10	2.67	-14906	-1850	-616.94		104383	0.51	16250	2321			1.25	Si
SLV 10	3.47	-14851	-1553	477.73		103997	0.51	16250	2321			1.49	Si
SLV 13	2.67	-13502	-3104	-1069.28		94553	0.51	16250	2321			0.75	No, Vu<V
SLV 13	3.47	-13585	-3093	1322.76		102596	0.4729	16250	2152			0.7	No, Vu<V
SLV 1	2.67	-8518	2034	614.12		59650	0.51	16250	2321			1.14	Si
SLV 1	3.47	-9080	2218	-1098.17		80633	0.4022	16250	1830			0.82	No, Vu<V
SLV 16	2.67	-10804	-2637	-951.98		77069	0.5007	16250	2278			0.86	No, Vu<V
SLV 16	3.47	-11148	-2820	1320.8		97210	0.4096	16250	1864			0.66	No, Vu<V
SLV 14	2.67	-13502	-3104	-1069.28		94553	0.51	16250	2321			0.75	No, Vu<V
SLV 14	3.47	-13585	-3093	1322.76		102596	0.4729	16250	2152			0.7	No, Vu<V
SLV 9	2.67	-14906	-1850	-616.94		104383	0.51	16250	2321			1.25	Si
SLV 9	3.47	-14851	-1553	477.73		103997	0.51	16250	2321			1.49	Si

Verifica a pressoflessione fuori piano D.M. 17-01-18 (N.T.C.)

quota 2.51 Wa 0.05 denominatore 8 γM = 2

Comb.	fd	Sa	σ0	N	M	Mc	Coeff.s.	Verifica
SLV 8	143750	0.3	24016	-3429	44.26	385.76	8.72	Si
SLV 7	143750	0.3	24016	-3429	44.26	385.76	8.72	Si
SLV 11	143750	0.3	27567	-3937	44.26	426.78	9.64	Si
SLV 12	143750	0.3	27567	-3937	44.26	426.78	9.64	Si
SLV 3	143750	0.3	37878	-5409	44.26	522.51	11.8	Si
SLV 4	143750	0.3	37878	-5409	44.26	522.51	11.8	Si
SLV 9	143750	0.3	79013	-11283	44.26	558.16	12.61	Si
SLV 10	143750	0.3	79013	-11283	44.26	558.16	12.61	Si
SLV 5	143750	0.3	75462	-10776	44.26	576.92	13.03	Si
SLV 6	143750	0.3	75462	-10776	44.26	576.92	13.03	Si

Verifica dei meccanismi locali di collasso con analisi cinematica lineare

forza di aggancio al piano = 0 quota mezzeria = 2.51 Wa = 0.05 Ta = 0.0808

Comb.	N top	N base	V orto	α0	M*	e*	a0*	aLim	Verifica
SLV 16	-4311	-6161	-9	0.04	513	0.957	0.60466	10.39734	No
SLV 15	-4311	-6161	-9	0.04	513	0.957	0.60466	10.39734	No
SLV 4	-3008	-7564	-11	0.04	380.7	0.945	0.61699	10.39734	No
SLV 3	-3008	-7564	-11	0.04	380.7	0.945	0.61699	10.39734	No
SLV 13	-5300	-9042	-1	0.041	613.6	0.964	0.61723	10.39734	No
SLV 14	-5300	-9042	-1	0.041	613.6	0.964	0.61723	10.39734	No
SLV 1	-3997	-10445	-3	0.041	481.1	0.955	0.63107	10.39734	No
SLV 2	-3997	-10445	-3	0.041	481.1	0.955	0.63107	10.39734	No
SLV 11	-2701	-3291	-19	0.038	349.6	0.94	0.58109	9.1791	No
SLV 12	-2701	-3291	-19	0.038	349.6	0.94	0.58109	9.1791	No

Tabella dei coefficienti di sicurezza minimi

Stato limite	Coeff.s.	Comb.	Verifica
PF_SLU	0	SLU 20	No
V_SLU	1.905	SLU 76	Si
PF_SLV	0.58	SLV 13	No
V_SLV	0.49	SLV 3	No
PFFP_SLV	8.715	SLV 7	Si
R_SLV	0.058	SLV 15	No

Maschio 106

Verifiche condotte secondo D.M. 17-01-18 (N.T.C.)

Dati geometrici

X ini.	Y ini.	X fin.	Y fin.	Quota i.	Quota.s	l	Sp.	h netta	h ini.	h fin.	a	a.s.,sx	a.s.,dx
-3.223	-3.248	-5.454	-3.248	L3	L4	2.231	0.28	3.68	3.68	3.68			

Caratteristiche del materiale

(Circolare 7 21-01-19 C8.5.I) Muratura in mattoni pieni e malta di calce LC2_Corti

fb	fk	fvk0	fmedio	τ0	fv0	μ	ϕ	fv,lim	E	G	FC
600000			345000	9000	20000	0.58	0.77	32500	320000000	128000000	1.2

Verifica a pressoflessione nel piano secondo D.M. 17-01-18 NTC §7.8.2.2.1 in combinazioni non sismiche, γM = 3

Comb.	Quota	N	M	σ0	Mu	c.s.	Verifica
SLU 74	2.67	-33538	4438.41	53697	12747.8	2.872	Si
SLU 74	3.47	-32451	2369.79	51958	13107.66	5.531	Si
SLU 77	2.67	-34014	4497.75	54459	12573.77	2.796	Si
SLU 77	3.47	-32927	2403.18	52720	12956.31	5.391	Si
SLU 69	2.67	-30746	4080.92	49228	13568.2	3.325	Si
SLU 69	3.47	-29660	2157.81	47488	13795.13	6.393	Si
SLU 60	2.67	-31112	4131.48	49813	13480.23	3.263	Si
SLU 60	3.47	-30044	2225.37	48103	13720.89	6.166	Si
SLU 81	2.67	-34197	4525.08	54753	12504.12	2.763	Si
SLU 81	3.47	-33111	2429.96	53013	12895.39	5.307	Si
SLU 62	2.67	-31588	4190.83	50575	13356.84	3.187	Si
SLU 62	3.47	-30520	2258.76	48865	13619.8	6.03	Si
SLU 84	2.67	-37571	3370.5	60155	10958.76	3.251	Si
SLU 84	3.47	-36485	2039.51	58416	11510.73	5.644	Si
SLU 79	2.67	-33749	4465.12	54035	12671.81	2.838	Si
SLU 79	3.47	-32663	2391.58	52296	13041.74	5.453	Si
SLU 83	2.67	-34673	4584.42	55515	12316.33	2.687	Si
SLU 83	3.47	-33587	2463.35	53776	12730.27	5.168	Si
SLU 56	2.67	-30928	4104.16	49519	13525.08	3.295	Si
SLU 56	3.47	-29860	2198.59	47809	13757.16	6.257	Si

Verifica a pressoflessione nel piano secondo D.M. 17-01-18 NTC §7.8.2.2.1 in combinazioni sismiche, γM = 2

Comb.	Quota	N	M	σ0	Mu	c.s.	Verifica
SLV 16	2.67	-19092	98.11	30567	15966.15	162.745	Si
SLV 16	3.47	-18871	7741.92	30215	15842.68	2.046	Si
SLV 12	2.67	-7544	2118.85	12078	7581.74	3.578	Si
SLV 12	3.47	-8662	3103.14	13869	8564.62	2.76	Si
SLV 4	2.67	-17445	5980.08	27931	15008.76	2.51	Si
SLV 4	3.47	-17167	-4727.71	27486	14839.45	3.139	Si
SLV 3	2.67	-17445	5980.08	27931	15008.76	2.51	Si
SLV 3	3.47	-17167	-4727.71	27486	14839.45	3.139	Si
SLV 11	2.67	-7544	2118.85	12078	7581.74	3.578	Si
SLV 11	3.47	-8662	3103.14	13869	8564.62	2.76	Si
SLV 8	2.67	-7049	3883.44	11287	7136.08	1.838	Si
SLV 8	3.47	-8151	-637.75	13051	8119.99	12.732	Si
SLV 7	2.67	-7049	3883.44	11287	7136.08	1.838	Si
SLV 7	3.47	-8151	-637.75	13051	8119.99	12.732	Si
SLV 14	2.67	-28496	130.63	45624	19914.45	152.444	Si
SLV 14	3.47	-27110	7977.13	43406	19495.17	2.444	Si
SLV 15	2.67	-19092	98.11	30567	15966.15	162.745	Si
SLV 15	3.47	-18871	7741.92	30215	15842.68	2.046	Si
SLV 13	2.67	-28496	130.63	45624	19914.45	152.444	Si
SLV 13	3.47	-27110	7977.13	43406	19495.17	2.444	Si

Verifica a taglio nel piano secondo D.M. 17-01-18 (N.T.C.) §7.8.2.2.2 con rottura per scorrimento in combinazioni non sismiche, γM = 3

Comb.	Quota	N	V par	M	σ0	σN	l'	fvd	Vt scorr.	Vt fess.diag.	Vt,lim	c.s.	Verifica
SLU 79	2.67	-33749	2583	4465.12		54035	2.2306	10833	6766			2.62	Si
SLU 79	3.47	-32663	2583	2391.58		52296	2.2306	10833	6766			2.62	Si
SLU 62	2.67	-31588	2405	4190.83		50575	2.2306	10833	6766			2.81	Si
SLU 62	3.47	-30520	2405	2258.76		48865	2.2306	10833	6766			2.81	Si
SLU 71	2.67	-30481	2369	4048.28		48803	2.2306	10833	6766			2.86	Si
SLU 71	3.47	-29395	2369	2146.22		47064	2.2306	10833	6766			2.86	Si
SLU 83	2.67	-34673	2643	4584.42		55515	2.2306	10833	6766			2.56	Si
SLU 83	3.47	-33587	2643	2463.35		53776	2.2306	10833	6766			2.56	Si
SLU 74	2.67	-33538	2577	4438.41		53697	2.2306	10833	6766			2.63	Si
SLU 74	3.47	-32451	2577	2369.79		51958	2.2306	10833	6766			2.63	Si
SLU 60	2.67	-31112	2373	4131.48		49813	2.2306	10833	6766			2.85	Si
SLU 60	3.47	-30044	2373	2225.37		48103	2.2306	10833	6766			2.85	Si
SLU 77	2.67	-34014	2609	4497.75		54459	2.2306	10833	6766			2.59	Si
SLU 77	3.47	-32927	2609	2403.18		52720	2.2306	10833	6766			2.59	Si
SLU 56	2.67	-30928	2372	4104.16		49519	2.2306	10833	6766			2.85	Si
SLU 56	3.47	-29860	2372	2198.59		47809	2.2306	10833	6766			2.85	Si
SLU 81	2.67	-34197	2610	4525.08		54753	2.2306	10833	6766			2.59	Si
SLU 81	3.47	-33111	2610	2429.96		53013	2.2306	10833	6766			2.59	Si
SLU 69	2.67	-30746	2395	4080.92		49228	2.2306	10833	6766			2.83	Si
SLU 69	3.47	-29660	2395	2157.81		47488	2.2306	10833	6766			2.83	Si

Verifica a taglio nel piano secondo D.M. 17-01-18 (N.T.C.) §7.8.2.2.2 con rottura per scorrimento in combinazioni sismiche, γM = 2

Comb.	Quota	N	V par	M	σ0	σN	l'	fvd	Vt scorr.	Vt fess.diag.	Vt,lim	c.s.	Verifica
SLV 7	2.67	-7049	9861	3883.44		14869	1.6933	11307	5361			0.54	No, Vu<V
SLV 7	3.47	-8151	8724	-637.75		13051	2.2306	10943	6835			0.78	No, Vu<V
SLV 15	2.67	-19092	-8203	98.11		30567	2.2306	14447	9023			1.1	Si
SLV 15	3.47	-18871	-8242	7741.92		31864	2.1152	14706	8710			1.06	Si
SLV 4	2.67	-17445	14564	5980.08		27931	2.2306	13919	8694			0.6	No, Vu<V
SLV 4	3.47	-17167	13971	-4727.71		27486	2.2306	13830	8638			0.62	No, Vu<V

Comb.	Quota	N	V par	M	σ0	σN	l'	fvd	Vt scorr.	Vt fess.diag.	Vt,lim	c.s.	Verifica
SLV 3	2.67	-17445	14564	5980.08		27931	2.2306	13919	8694			0.6	No, Vu<V
SLV 3	3.47	-17167	13971	-4727.71		27486	2.2306	13830	8638			0.62	No, Vu<V
SLV 13	2.67	-28496	-11002	130.63		45624	2.2306	16250	10149			0.92	No, Vu<V
SLV 13	3.47	-27110	-10408	7977.13		43406	2.2306	16250	10149			0.98	No, Vu<V
SLV 16	2.67	-19092	-8203	98.11		30567	2.2306	14447	9023			1.1	Si
SLV 16	3.47	-18871	-8242	7741.92		31864	2.1152	14706	8710			1.06	Si
SLV 14	2.67	-28496	-11002	130.63		45624	2.2306	16250	10149			0.92	No, Vu<V
SLV 14	3.47	-27110	-10408	7977.13		43406	2.2306	16250	10149			0.98	No, Vu<V
SLV 8	2.67	-7049	9861	3883.44		14869	1.6933	11307	5361			0.54	No, Vu<V
SLV 8	3.47	-8151	8724	-637.75		13051	2.2306	10943	6835			0.78	No, Vu<V
SLV 1	2.67	-26849	11766	6012.61		42988	2.2306	16250	10149			0.86	No, Vu<V
SLV 1	3.47	-25406	11805	-4492.51		40677	2.2306	16250	10149			0.86	No, Vu<V
SLV 2	2.67	-26849	11766	6012.61		42988	2.2306	16250	10149			0.86	No, Vu<V
SLV 2	3.47	-25406	11805	-4492.51		40677	2.2306	16250	10149			0.86	No, Vu<V

Verifica a pressoflessione fuori piano D.M. 17-01-18 (N.T.C.)

quota 2.51 Wa 0.05 denominatore 8 γM = 2

Comb.	fd	Sa	σ0	N	M	Mc	Coeff.s.	Verifica
SLV 8	143750	0.3	8697	-5432	193.59	706.33	3.65	Si
SLV 7	143750	0.3	8697	-5432	193.59	706.33	3.65	Si
SLV 12	143750	0.3	11092	-6928	193.59	881.86	4.56	Si
SLV 11	143750	0.3	11092	-6928	193.59	881.86	4.56	Si
SLV 3	143750	0.3	22394	-13987	193.59	1599.25	8.26	Si
SLV 4	143750	0.3	22394	-13987	193.59	1599.25	8.26	Si
SLV 15	143750	0.3	30379	-18974	193.59	1995.9	10.31	Si
SLV 16	143750	0.3	30379	-18974	193.59	1995.9	10.31	Si
SLV 1	143750	0.3	36530	-22815	193.59	2239.22	11.57	Si
SLV 2	143750	0.3	36530	-22815	193.59	2239.22	11.57	Si

Verifica dei meccanismi locali di collasso con analisi cinematica lineare

forza di aggancio al piano = 0 quota mezzeria = 2.51 Wa = 0.05 Ta = 0.0808

Comb.	N top	N base	V orto	α0	M*	e*	a0*	aLim	Verifica
SLV 14	-22705	-29296	83	0.038	2635.4	0.963	0.57136	10.39734	No
SLV 13	-22705	-29296	83	0.038	2635.4	0.963	0.57136	10.39734	No
SLV 3	-12568	-8978	-63	0.039	1605.5	0.943	0.60332	10.39734	No
SLV 4	-12568	-8978	-63	0.039	1605.5	0.943	0.60332	10.39734	No
SLV 16	-17151	-19919	26	0.041	2070.7	0.954	0.62156	10.39734	No
SLV 15	-17151	-19919	26	0.041	2070.7	0.954	0.62156	10.39734	No
SLV 9	-27580	-36406	119	0.037	3131.5	0.969	0.55025	9.1791	No
SLV 10	-27580	-36406	119	0.037	3131.5	0.969	0.55025	9.1791	No
SLV 2	-18122	-18355	-5	0.042	2169.2	0.956	0.63373	10.39734	No
SLV 1	-18122	-18355	-5	0.042	2169.2	0.956	0.63373	10.39734	No

Tabella dei coefficienti di sicurezza minimi

Stato limite	Coeff.s.	Comb.	Verifica
PF_SLU	2.687	SLU 83	Si
V_SLU	2.561	SLU 83	Si
PF_SLV	1.838	SLV 7	Si
V_SLV	0.544	SLV 7	No
PFFP_SLV	3.649	SLV 7	Si
R_SLV	0.055	SLV 13	No

Maschio 107

Verifiche condotte secondo D.M. 17-01-18 (N.T.C.)

Dati geometrici

X ini.	Y ini.	X fin.	Y fin.	Quota i.	Quota.s	l	Sp.	h netta	h ini.	h fin.	a	a.s.,sx	a.s.,dx
-0.134	-3.248	-2.223	-3.248	L3	L4	2.089	0.28	3.68	3.68	3.68			

Caratteristiche del materiale

(Circolare 7 21-01-19 C8.5.I) Muratura in mattoni pieni e malta di calce LC2_Corti

fb	fk	fvk0	fmedio	τ0	fv0	μ	ϕ	fv,lim	E	G	FC
600000			345000	9000	20000	0.58	0.77	32500	320000000	128000000	1.2

Verifica a pressoflessione nel piano secondo D.M. 17-01-18 NTC §7.8.2.2.1 in combinazioni non sismiche, γM = 3

Comb.	Quota	N	M	σ0	Mu	c.s.	Verifica
SLU 56	1.57	-35667	-4700.41	60970	9371.71	1.994	Si
SLU 56	3.47	-26477	1359.7	45259	12291.3	9.04	Si
SLU 62	1.57	-36189	-4754.77	61861	9094.93	1.913	Si
SLU 62	3.47	-26978	1446.76	46116	12227.52	8.452	Si
SLU 82	1.57	-40399	-3326.47	69058	6424.31	1.931	Si
SLU 82	3.47	-30396	2411.42	51959	11499.14	4.769	Si
SLU 79	1.57	-38548	-5067.88	65894	7694.25	1.518	Si
SLU 79	3.47	-28884	1557.09	49374	11884.54	7.633	Si
SLU 81	1.57	-38841	-5089.42	66394	7503.5	1.474	Si
SLU 81	3.47	-29193	1630.93	49902	11813.97	7.244	Si
SLU 77	1.57	-38868	-5112.5	66441	7485.68	1.464	Si
SLU 77	3.47	-29133	1560.79	49799	11828.05	7.578	Si
SLU 83	1.57	-39390	-5166.86	67332	7135.71	1.381	Si
SLU 83	3.47	-29634	1647.86	50657	11705.87	7.104	Si
SLU 78	1.57	-40426	-3349.55	69105	6404.64	1.912	Si
SLU 78	3.47	-30336	2341.28	51856	11516.39	4.919	Si
SLU 74	1.57	-38319	-5035.06	65503	7840.93	1.557	Si
SLU 74	3.47	-28691	1543.87	49045	11926.45	7.725	Si
SLU 84	1.57	-40948	-3403.91	69996	6019.03	1.768	Si
SLU 84	3.47	-30837	2428.34	52713	11367.75	4.681	Si

Verifica a pressoflessione nel piano secondo D.M. 17-01-18 NTC §7.8.2.2.1 in combinazioni sismiche, γM = 2

Comb.	Quota	N	M	σ0	Mu	c.s.	Verifica
SLV 4	1.57	-9563	4228.58	16348	8653.77	2.046	Si
SLV 4	3.47	-2117	-2711.58	0	0	0	No, e>l/2
SLV 12	1.57	-13351	-5674.37	22821	11341.8	1.999	Si
SLV 12	3.47	-12221	1221.61	20891	10584.13	8.664	Si
SLV 11	1.57	-13351	-5674.37	22821	11341.8	1.999	Si
SLV 11	3.47	-12221	1221.61	20891	10584.13	8.664	Si
SLV 9	1.57	-46888	-5914.17	80151	16851.45	2.849	Si
SLV 9	3.47	-35411	2872.46	60531	18666.27	6.498	Si
SLV 13	1.57	-43510	-11207.79	74376	17785.52	1.587	Si
SLV 13	3.47	-37105	4723.66	63428	18640.6	3.946	Si
SLV 16	1.57	-33449	-11135.85	57177	18591.12	1.669	Si
SLV 16	3.47	-30149	4228.4	51536	18210.94	4.307	Si
SLV 3	1.57	-9563	4228.58	16348	8653.77	2.046	Si
SLV 3	3.47	-2117	-2711.58	0	0	0	No, e>l/2
SLV 14	1.57	-43510	-11207.79	74376	17785.52	1.587	Si
SLV 14	3.47	-37105	4723.66	63428	18640.6	3.946	Si
SLV 15	1.57	-33449	-11135.85	57177	18591.12	1.669	Si
SLV 15	3.47	-30149	4228.4	51536	18210.94	4.307	Si
SLV 10	1.57	-46888	-5914.17	80151	16851.45	2.849	Si
SLV 10	3.47	-35411	2872.46	60531	18666.27	6.498	Si

Verifica a taglio nel piano secondo D.M. 17-01-18 (N.T.C.) §7.8.2.2.2 con rottura per scorrimento in combinazioni non sismiche, γM = 3

Comb.	Quota	N	V par	M	σ0	σN	l'	fvd	Vt scorr.	Vt fess.diag.	Vt,lim	c.s.	Verifica
SLU 47	1.57	-34153	1777	-1228.42		58381	2.0893	10833	6338			3.57	Si
SLU 47	3.47	-25012	1775	2388.62		42755	2.0893	10833	6338			3.57	Si
SLU 73	1.57	-40048	1635	-1974.74		68458	2.0893	10833	6338			3.88	Si
SLU 73	3.47	-30007	1627	2824.06		51293	2.0893	10833	6338			3.9	Si
SLU 5	1.57	-27842	1630	-393.44		47593	2.0893	10833	6338			3.89	Si
SLU 5	3.47	-20505	1634	2194.53		35051	2.0893	10229	5984			3.66	Si
SLU 76	1.57	-40597	1645	-2052.18		69396	2.0893	10833	6338			3.85	Si
SLU 76	3.47	-30448	1636	2840.98		52048	2.0893	10833	6338			3.87	Si
SLU 55	1.57	-37397	1685	-1640.09		63926	2.0893	10833	6338			3.76	Si
SLU 55	3.47	-27792	1679	2639.89		47508	2.0893	10833	6338			3.77	Si
SLU 65	1.57	-36805	1727	-1563.07		62914	2.0893	10833	6338			3.67	Si
SLU 65	3.47	-27227	1722	2572.79		46541	2.0893	10833	6338			3.68	Si
SLU 44	1.57	-33605	1767	-1150.98		57444	2.0893	10833	6338			3.59	Si
SLU 44	3.47	-24571	1766	2371.7		42001	2.0893	10833	6338			3.59	Si
SLU 52	1.57	-36848	1675	-1562.65		62988	2.0893	10833	6338			3.78	Si
SLU 52	3.47	-27351	1670	2622.96		46753	2.0893	10833	6338			3.79	Si
SLU 68	1.57	-37354	1737	-1640.51		63852	2.0893	10833	6338			3.65	Si
SLU 68	3.47	-27668	1731	2589.72		47295	2.0893	10833	6338			3.66	Si
SLU 2	1.57	-27293	1620	-315.99		46655	2.0893	10833	6338			3.91	Si
SLU 2	3.47	-20064	1625	2177.61		34297	2.0893	10128	5925			3.65	Si

Verifica a taglio nel piano secondo D.M. 17-01-18 (N.T.C.) §7.8.2.2.2 con rottura per scorrimento in combinazioni sismiche, γM = 2

Comb.	Quota	N	V par	M	σ0	σN	l'	fvd	Vt scorr.	Vt fess.diag.	Vt,lim	c.s.	Verifica
SLV 13	1.57	-43510	-5693	-11207.79		74376	2.0893	16250	9506			1.67	Si
SLV 13	3.47	-37105	-4853	4723.66		63428	2.0893	16250	9506			1.96	Si
SLV 14	1.57	-43510	-5693	-11207.79		74376	2.0893	16250	9506			1.67	Si
SLV 14	3.47	-37105	-4853	4723.66		63428	2.0893	16250	9506			1.96	Si
SLV 11	1.57	-13351	-4812	-5674.37		25651	1.8589	13463	7007			1.46	Si
SLV 11	3.47	-12221	-3459	1221.61		20891	2.0893	12512	7319			2.12	Si
SLV 12	1.57	-13351	-4812	-5674.37		25651	1.8589	13463	7007			1.46	Si
SLV 12	3.47	-12221	-3459	1221.61		20891	2.0893	12512	7319			2.12	Si
SLV 16	1.57	-33449	-7558	-11135.85		57177	2.0893	16250	9506			1.26	Si
SLV 16	3.47	-30149	-6102	4228.4		51536	2.0893	16250	9506			1.56	Si
SLV 4	1.57	-9563	6505	4228.58		18897	1.8075	12113	6130			0.94	No, Vu<V
SLV 4	3.47	-2117	5612	-2711.58		0	0	8333	0			0	No, Vu<V
SLV 15	1.57	-33449	-7558	-11135.85		57177	2.0893	16250	9506			1.26	Si
SLV 15	3.47	-30149	-6102	4228.4		51536	2.0893	16250	9506			1.56	Si
SLV 1	1.57	-19625	8371	4156.64		33546	2.0893	15043	8800			1.05	Si
SLV 1	3.47	-9074	6860	-2216.32		15512	2.0893	11436	6690			0.98	No, Vu<V
SLV 2	1.57	-19625	8371	4156.64		33546	2.0893	15043	8800			1.05	Si
SLV 2	3.47	-9074	6860	-2216.32		15512	2.0893	11436	6690			0.98	No, Vu<V
SLV 3	1.57	-9563	6505	4228.58		18897	1.8075	12113	6130			0.94	No, Vu<V
SLV 3	3.47	-2117	5612	-2711.58		0	0	8333	0			0	No, Vu<V

Verifica a pressoflessione fuori piano D.M. 17-01-18 (N.T.C.)

quota 2.51 Wa 0.05 denominatore 8 γM = 2

Comb.	fd	Sa	σ0	N	M	Mc	Coeff.s.	Verifica
SLV 8	143750	0.3	7687	-4497	181.33	589.94	3.25	Si
SLV 7	143750	0.3	7687	-4497	181.33	589.94	3.25	Si
SLV 4	143750	0.3	7754	-4536	181.33	594.76	3.28	Si
SLV 3	143750	0.3	7754	-4536	181.33	594.76	3.28	Si
SLV 11	143750	0.3	21976	-12856	181.33	1476.14	8.14	Si
SLV 12	143750	0.3	21976	-12856	181.33	1476.14	8.14	Si
SLV 1	143750	0.3	22101	-12929	181.33	1482.69	8.18	Si
SLV 2	143750	0.3	22101	-12929	181.33	1482.69	8.18	Si
SLV 10	143750	0.3	69800	-40833	181.33	2450.99	13.52	Si
SLV 9	143750	0.3	69800	-40833	181.33	2450.99	13.52	Si

Verifica dei meccanismi locali di collasso con analisi cinematica lineare

forza di aggancio al piano = 0 quota mezzeria = 2.51 Wa = 0.05 Ta = 0.0808

Comb.	N top	N base	V orto	α0	M*	e*	a0*	aLim	Verifica
SLV 15	-22133	-41573	-57	0.039	2556.6	0.964	0.58391	10.39734	No
SLV 16	-22133	-41573	-57	0.039	2556.6	0.964	0.58391	10.39734	No
SLV 14	-27386	-51751	-17	0.04	3091.3	0.97	0.5987	10.39734	No
SLV 13	-27386	-51751	-17	0.04	3091.3	0.97	0.5987	10.39734	No

Comb.	N top	N base	V orto	α0	M*	e*	a0*	aLim	Verifica
SLV 1	-9423	-17120	60	0.039	1266.1	0.934	0.61065	10.39734	No
SLV 2	-9423	-17120	60	0.039	1266.1	0.934	0.61065	10.39734	No
SLV 6	-21839	-41115	79	0.038	2526.6	0.964	0.57029	9.1791	No
SLV 5	-21839	-41115	79	0.038	2526.6	0.964	0.57029	9.1791	No
SLV 9	-27228	-51504	56	0.039	3075.2	0.97	0.57932	9.1791	No
SLV 10	-27228	-51504	56	0.039	3075.2	0.97	0.57932	9.1791	No

Tabella dei coefficienti di sicurezza minimi

Stato limite	Coeff.s.	Comb.	Verifica
PF_SLU	1.381	SLU 83	Si
V_SLU	3.567	SLU 47	Si
PF_SLV	0	SLV 3	No
V_SLV	0	SLV 3	No
PFFP_SLV	3.253	SLV 7	Si
R_SLV	0.056	SLV 15	No

Maschio 108

Verifiche condotte secondo D.M. 17-01-18 (N.T.C.)

Dati geometrici

X ini.	Y ini.	X fin.	Y fin.	Quota i.	Quota.s	l	Sp.	h netta	h ini.	h fin.	a	a.s.,sx	a.s.,dx
-2.889	5.83	-5.105	5.83	L3	L4	2.216	0.28	3.68	3.68	3.68			

Caratteristiche del materiale

(Circolare 7 21-01-19 C8.5.I) Muratura in mattoni pieni e malta di calce LC2_Corti

fb	fk	fvk0	fmedio	τ0	fv0	μ	ϕ	fv,lim	E	G	FC
600000			345000	9000	20000	0.58	0.77	32500	320000000	128000000	1.2

Verifica a pressoflessione nel piano secondo D.M. 17-01-18 NTC §7.8.2.2.1 in combinazioni non sismiche, γM = 3

Comb.	Quota	N	M	σ0	Mu	c.s.	Verifica
SLU 75	1.57	-40811	1106.39	65775	8706.08	7.869	Si
SLU 75	3.47	-33952	-507.02	54719	12348.29	24.354	Si
SLU 81	1.57	-41286	1223.09	66540	8377.63	6.85	Si
SLU 81	3.47	-34493	-564.42	55592	12135.67	21.501	Si
SLU 73	1.57	-39654	1157.8	63909	9465.36	8.175	Si
SLU 73	3.47	-33001	-540.66	53186	12690.39	23.472	Si
SLU 83	1.57	-42107	1149.84	67863	7786.65	6.772	Si
SLU 83	3.47	-35140	-530.56	56635	11864.83	22.363	Si
SLU 78	1.57	-41632	1033.14	67097	8132.17	7.871	Si
SLU 78	3.47	-34599	-473.17	55762	12092.82	25.557	Si
SLU 74	1.57	-40834	1107.54	65812	8690.3	7.847	Si
SLU 74	3.47	-33970	-504.98	54749	12341.12	24.439	Si
SLU 84	1.57	-42084	1148.69	67825	7803.71	6.794	Si
SLU 84	3.47	-35122	-532.6	56605	11872.96	22.292	Si
SLU 82	1.57	-41263	1221.94	66503	8393.87	6.869	Si
SLU 82	3.47	-34475	-566.46	55562	12143.27	21.437	Si
SLU 79	1.57	-41334	1013.22	66617	8344.19	8.235	Si
SLU 79	3.47	-34326	-469.55	55323	12202.64	25.988	Si
SLU 77	1.57	-41655	1034.29	67135	8115.56	7.847	Si
SLU 77	3.47	-34618	-471.13	55792	12085.13	25.652	Si

Verifica a pressoflessione nel piano secondo D.M. 17-01-18 NTC §7.8.2.2.1 in combinazioni sismiche, γM = 2

Comb.	Quota	N	M	σ0	Mu	c.s.	Verifica
SLV 13	1.57	-34597	-3265.37	55759	20839.94	6.382	Si
SLV 13	3.47	-21000	3439.1	33845	16822.5	4.892	Si
SLV 5	1.57	-9946	2959.46	16030	9574.16	3.235	Si
SLV 5	3.47	-11911	-817.67	19197	11123.98	13.605	Si
SLV 3	1.57	-21216	4858.48	34194	16928.87	3.484	Si
SLV 3	3.47	-25052	-4186.73	40377	18585.24	4.439	Si
SLV 1	1.57	-12435	5378.29	20041	11517.62	2.141	Si
SLV 1	3.47	-18600	-3801.39	29977	15552.19	4.091	Si
SLV 2	1.57	-12435	5378.29	20041	11517.62	2.141	Si
SLV 2	3.47	-18600	-3801.39	29977	15552.19	4.091	Si
SLV 14	1.57	-34597	-3265.37	55759	20839.94	6.382	Si
SLV 14	3.47	-21000	3439.1	33845	16822.5	4.892	Si
SLV 4	1.57	-21216	4858.48	34194	16928.87	3.484	Si
SLV 4	3.47	-25052	-4186.73	40377	18585.24	4.439	Si
SLV 15	1.57	-43378	-3785.18	69912	20562.55	5.432	Si
SLV 15	3.47	-27453	3053.76	44245	19402.84	6.354	Si
SLV 6	1.57	-9946	2959.46	16030	9574.16	3.235	Si
SLV 6	3.47	-11911	-817.67	19197	11123.98	13.605	Si
SLV 16	1.57	-43378	-3785.18	69912	20562.55	5.432	Si
SLV 16	3.47	-27453	3053.76	44245	19402.84	6.354	Si

Verifica a taglio nel piano secondo D.M. 17-01-18 (N.T.C.) §7.8.2.2.2 con rottura per scorrimento in combinazioni non sismiche, γM = 3

Comb.	Quota	N	V par	M	σ0	σN	l'	fvd	Vt scorr.	Vt fess.diag.	Vt,lim	c.s.	Verifica
SLU 78	1.57	-41632	-1811	1033.14		67097	2.216	10833	6722			3.71	Si
SLU 78	3.47	-34599	-1727	-473.17		55762	2.216	10833	6722			3.89	Si
SLU 84	1.57	-42084	-1675	1148.69		67825	2.216	10833	6722			4.01	Si
SLU 84	3.47	-35122	-1590	-532.6		56605	2.216	10833	6722			4.23	Si
SLU 70	1.57	-37913	-1742	885.28		61104	2.216	10833	6722			3.86	Si
SLU 70	3.47	-31189	-1666	-409.8		50266	2.216	10833	6722			4.04	Si
SLU 83	1.57	-42107	-1678	1149.84		67863	2.216	10833	6722			4.01	Si
SLU 83	3.47	-35140	-1591	-530.56		56635	2.216	10833	6722			4.22	Si
SLU 80	1.57	-41311	-1805	1012.07		66579	2.216	10833	6722			3.72	Si
SLU 80	3.47	-34307	-1722	-471.59		55293	2.216	10833	6722			3.9	Si

Comb.	Quota	N	V par	M	σ0	σN	l'	fvd	Vt scorr.	Vt fess.diag.	Vt,lim	c.s.	Verifica
SLU 71	1.57	-37615	-1739	865.37		60623	2.216	10833	6722			3.87	Si
SLU 71	3.47	-30916	-1661	-406.19		49827	2.216	10833	6722			4.05	Si
SLU 77	1.57	-41655	-1814	1034.29		67135	2.216	10833	6722			3.71	Si
SLU 77	3.47	-34618	-1729	-471.13		55792	2.216	10833	6722			3.89	Si
SLU 79	1.57	-41334	-1808	1013.22		66617	2.216	10833	6722			3.72	Si
SLU 79	3.47	-34326	-1723	-469.55		55323	2.216	10833	6722			3.9	Si
SLU 72	1.57	-37592	-1736	864.22		60586	2.216	10833	6722			3.87	Si
SLU 72	3.47	-30897	-1660	-408.23		49797	2.216	10833	6722			4.05	Si
SLU 69	1.57	-37936	-1745	886.43		61141	2.216	10833	6722			3.85	Si
SLU 69	3.47	-31208	-1667	-407.76		50297	2.216	10833	6722			4.03	Si

Verifica a taglio nel piano secondo D.M. 17-01-18 (N.T.C.) §7.8.2.2.2 con rottura per scorrimento in combinazioni sismiche, γM = 2

Comb.	Quota	N	V par	M	σ0	σN	l'	fvd	Vt scorr.	Vt fess.diag.	Vt,lim	c.s.	Verifica
SLV 15	1.57	-43378	-12704	-3785.18		69912	2.216	16250	10083			0.79	No, Vu<V
SLV 15	3.47	-27453	-11064	3053.76		44245	2.216	16250	10083			0.91	No, Vu<V
SLV 4	1.57	-21216	8905	4858.48		34194	2.216	15172	9414			1.06	Si
SLV 4	3.47	-25052	7401	-4186.73		40377	2.216	16250	10083			1.36	Si
SLV 14	1.57	-34597	-11061	-3265.37		55759	2.216	16250	10083			0.91	No, Vu<V
SLV 14	3.47	-21000	-9441	3439.1		33845	2.216	15102	9371			0.99	No, Vu<V
SLV 13	1.57	-34597	-11061	-3265.37		55759	2.216	16250	10083			0.91	No, Vu<V
SLV 13	3.47	-21000	-9441	3439.1		33845	2.216	15102	9371			0.99	No, Vu<V
SLV 11	1.57	-45867	-7059	-1366.35		73923	2.216	16250	10083			1.43	Si
SLV 11	3.47	-34141	-6494	70.03		55024	2.216	16250	10083			1.55	Si
SLV 12	1.57	-45867	-7059	-1366.35		73923	2.216	16250	10083			1.43	Si
SLV 12	3.47	-34141	-6494	70.03		55024	2.216	16250	10083			1.55	Si
SLV 3	1.57	-21216	8905	4858.48		34194	2.216	15172	9414			1.06	Si
SLV 3	3.47	-25052	7401	-4186.73		40377	2.216	16250	10083			1.36	Si
SLV 16	1.57	-43378	-12704	-3785.18		69912	2.216	16250	10083			0.79	No, Vu<V
SLV 16	3.47	-27453	-11064	3053.76		44245	2.216	16250	10083			0.91	No, Vu<V
SLV 2	1.57	-12435	10549	5378.29		21916	2.0264	12716	7215			0.68	No, Vu<V
SLV 2	3.47	-18600	9023	-3801.39		29977	2.216	14329	8890			0.99	No, Vu<V
SLV 1	1.57	-12435	10549	5378.29		21916	2.0264	12716	7215			0.68	No, Vu<V
SLV 1	3.47	-18600	9023	-3801.39		29977	2.216	14329	8890			0.99	No, Vu<V

Verifica a pressoflessione fuori piano D.M. 17-01-18 (N.T.C.)

quota 2.51 Wa 0.05 denominatore 8 γM = 2

Comb.	fd	Sa	σ0	N	M	Mc	Coeff.s.	Verifica
SLV 5	143750	0.3	18662	-11579	192.32	1373.51	7.14	Si
SLV 6	143750	0.3	18662	-11579	192.32	1373.51	7.14	Si
SLV 10	143750	0.3	24642	-15290	192.32	1708.88	8.89	Si
SLV 9	143750	0.3	24642	-15290	192.32	1708.88	8.89	Si
SLV 2	143750	0.3	25534	-15843	192.32	1754.54	9.12	Si
SLV 1	143750	0.3	25534	-15843	192.32	1754.54	9.12	Si
SLV 3	143750	0.3	37405	-23209	192.32	2254.54	11.72	Si
SLV 4	143750	0.3	37405	-23209	192.32	2254.54	11.72	Si
SLV 13	143750	0.3	45469	-28212	192.32	2479.91	12.89	Si
SLV 14	143750	0.3	45469	-28212	192.32	2479.91	12.89	Si

Verifica dei meccanismi locali di collasso con analisi cinematica lineare

forza di aggancio al piano = 0 quota mezzeria = 2.51 Wa = 0.05 Ta = 0.0808

Comb.	N top	N base	V orto	α0	M*	e*	a0*	aLim	Verifica
SLV 13	-19527	-31204	104	0.037	2310	0.959	0.5584	10.39734	No
SLV 14	-19527	-31204	104	0.037	2310	0.959	0.5584	10.39734	No
SLV 4	-19193	-23170	-104	0.037	2276	0.958	0.55893	10.39734	No
SLV 3	-19193	-23170	-104	0.037	2276	0.958	0.55893	10.39734	No
SLV 9	-11460	-15696	144	0.033	1491	0.939	0.51343	9.1791	No
SLV 10	-11460	-15696	144	0.033	1491	0.939	0.51343	9.1791	No
SLV 15	-24769	-39576	30	0.04	2843.2	0.966	0.59936	10.39734	No
SLV 16	-24769	-39576	30	0.04	2843.2	0.966	0.59936	10.39734	No
SLV 8	-27260	-38678	-143	0.036	3096.8	0.968	0.53768	9.1791	No
SLV 7	-27260	-38678	-143	0.036	3096.8	0.968	0.53768	9.1791	No

Tabella dei coefficienti di sicurezza minimi

Stato limite	Coeff.s.	Comb.	Verifica
PF_SLU	6.772	SLU 83	Si
V_SLU	3.705	SLU 77	Si
PF_SLV	2.141	SLV 1	Si
V_SLV	0.684	SLV 1	No
PFFP_SLV	7.142	SLV 5	Si
R_SLV	0.054	SLV 13	No

Maschio 109

Verifiche condotte secondo D.M. 17-01-18 (N.T.C.)

Dati geometrici

X ini.	Y ini.	X fin.	Y fin.	Quota i.	Quota.s	l	Sp.	h netta	h ini.	h fin.	a	a.s.,sx	a.s.,dx
-0.134	5.83	-1.889	5.83	L3	L4	1.755	0.28	3.68	3.68	3.68			

Caratteristiche del materiale

(Circolare 7 21-01-19 C8.5.I) Muratura in mattoni pieni e malta di calce LC2_Corti

fb	fk	fvk0	fmedio	τ0	fv0	μ	ϕ	fv,lim	E	G	FC
600000			345000	9000	20000	0.58	0.77	32500	320000000	128000000	1.2

Verifica a pressoflessione nel piano secondo D.M. 17-01-18 NTC §7.8.2.2.1 in combinazioni non sismiche, γM = 3

Comb.	Quota	N	M	σ0	Mu	c.s.	Verifica
SLU 84	1.57	-24485	468.59	49815	8348.16	17.815	Si
SLU 84	3.47	-25480	2252.09	51839	8131.69	3.611	Si
SLU 74	1.57	-23878	464.15	48580	8458.98	18.225	Si
SLU 74	3.47	-24628	2149.34	50105	8319.78	3.871	Si
SLU 82	1.57	-23947	514.77	48720	8447.21	16.41	Si
SLU 82	3.47	-24838	2172.66	50533	8276.3	3.809	Si
SLU 83	1.57	-24535	461.43	49916	8338.37	18.071	Si
SLU 83	3.47	-25463	2254.06	51804	8135.77	3.609	Si
SLU 80	1.57	-24199	411.94	49234	8402.31	20.397	Si
SLU 80	3.47	-25116	2215.67	51099	8215.88	3.708	Si
SLU 81	1.57	-23996	507.61	48821	8438.59	16.624	Si
SLU 81	3.47	-24821	2174.63	50499	8279.91	3.808	Si
SLU 78	1.57	-24366	425.14	49574	8371.1	19.69	Si
SLU 78	3.47	-25286	2226.8	51446	8177.14	3.672	Si
SLU 75	1.57	-23828	471.31	48478	8467.34	17.965	Si
SLU 75	3.47	-24645	2147.37	50140	8316.32	3.873	Si
SLU 77	1.57	-24416	417.97	49675	8361.56	20.005	Si
SLU 77	3.47	-25269	2228.77	51411	8181.08	3.671	Si
SLU 79	1.57	-24249	404.78	49335	8393.14	20.735	Si
SLU 79	3.47	-25099	2217.64	51064	8219.69	3.707	Si

Verifica a pressoflessione nel piano secondo D.M. 17-01-18 NTC §7.8.2.2.1 in combinazioni sismiche, γM = 2

Comb.	Quota	N	M	σ0	Mu	c.s.	Verifica
SLV 3	1.57	-16055	4082.58	32664	10324.35	2.529	Si
SLV 3	3.47	-9794	-1813.99	19926	7194.28	3.966	Si
SLV 5	1.57	-1463	857.01	2977	1253.05	1.462	Si
SLV 5	3.47	-3060	-238.25	6226	2548.9	10.699	Si
SLV 6	1.57	-1463	857.01	2977	1253.05	1.462	Si
SLV 6	3.47	-3060	-238.25	6226	2548.9	10.699	Si
SLV 9	1.57	-4159	-1269.21	8462	3397.87	2.677	Si
SLV 9	3.47	-9090	1797.33	18494	6770.92	3.767	Si
SLV 2	1.57	-7868	3738.75	16009	6001.37	1.605	Si
SLV 2	3.47	-3439	-2182.81	6996	2845.45	1.304	Si
SLV 4	1.57	-16055	4082.58	32664	10324.35	2.529	Si
SLV 4	3.47	-9794	-1813.99	19926	7194.28	3.966	Si
SLV 1	1.57	-7868	3738.75	16009	6001.37	1.605	Si
SLV 1	3.47	-3439	-2182.81	6996	2845.45	1.304	Si
SLV 15	1.57	-25042	-3004.83	50948	12814.62	4.265	Si
SLV 15	3.47	-29895	4971.28	60822	13177.8	2.651	Si
SLV 10	1.57	-4159	-1269.21	8462	3397.87	2.677	Si
SLV 10	3.47	-9090	1797.33	18494	6770.92	3.767	Si
SLV 16	1.57	-25042	-3004.83	50948	12814.62	4.265	Si
SLV 16	3.47	-29895	4971.28	60822	13177.8	2.651	Si

Verifica a taglio nel piano secondo D.M. 17-01-18 (N.T.C.) §7.8.2.2.2 con rottura per scorrimento in combinazioni non sismiche, γM = 3

Comb.	Quota	N	V par	M	σ0	σN	I'	fvd	Vt scorr.	Vt fess.diag.	Vt,lim	c.s.	Verifica
SLU 76	1.57	-23628	-2291	462.89		48071	1.7554	10833	5325			2.32	Si
SLU 76	3.47	-24486	-2220	2134.92		49816	1.7554	10833	5325			2.4	Si
SLU 75	1.57	-23828	-2274	471.31		48478	1.7554	10833	5325			2.34	Si
SLU 75	3.47	-24645	-2203	2147.37		50140	1.7554	10833	5325			2.42	Si
SLU 79	1.57	-24249	-2362	404.78		49335	1.7554	10833	5325			2.25	Si
SLU 79	3.47	-25099	-2291	2217.64		51064	1.7554	10833	5325			2.32	Si
SLU 83	1.57	-24535	-2388	461.43		49916	1.7554	10833	5325			2.23	Si
SLU 83	3.47	-25463	-2316	2254.06		51804	1.7554	10833	5325			2.3	Si
SLU 77	1.57	-24416	-2363	417.97		49675	1.7554	10833	5325			2.25	Si
SLU 77	3.47	-25269	-2291	2228.77		51411	1.7554	10833	5325			2.32	Si
SLU 81	1.57	-23996	-2273	507.61		48821	1.7554	10833	5325			2.34	Si
SLU 81	3.47	-24821	-2203	2174.63		50499	1.7554	10833	5325			2.42	Si
SLU 80	1.57	-24199	-2388	411.94		49234	1.7554	10833	5325			2.23	Si
SLU 80	3.47	-25116	-2316	2215.67		51099	1.7554	10833	5325			2.3	Si
SLU 82	1.57	-23947	-2299	514.77		48720	1.7554	10833	5325			2.32	Si
SLU 82	3.47	-24838	-2228	2172.66		50533	1.7554	10833	5325			2.39	Si
SLU 78	1.57	-24366	-2389	425.14		49574	1.7554	10833	5325			2.23	Si
SLU 78	3.47	-25286	-2317	2226.8		51446	1.7554	10833	5325			2.3	Si
SLU 84	1.57	-24485	-2414	468.59		49815	1.7554	10833	5325			2.21	Si
SLU 84	3.47	-25480	-2341	2252.09		51839	1.7554	10833	5325			2.27	Si

Verifica a taglio nel piano secondo D.M. 17-01-18 (N.T.C.) §7.8.2.2.2 con rottura per scorrimento in combinazioni sismiche, γM = 2

Comb.	Quota	N	V par	M	σ0	σN	I'	fvd	Vt scorr.	Vt fess.diag.	Vt,lim	c.s.	Verifica
SLV 9	1.57	-4159	-3053	-1269.21		8648	1.7177	10063	4840			1.59	Si
SLV 9	3.47	-9090	-3685	1797.33		18494	1.7554	12032	5914			1.61	Si
SLV 4	1.57	-16055	5234	4082.58		32664	1.7554	14866	7307			1.4	Si
SLV 4	3.47	-9794	4363	-1813.99		19926	1.7554	12319	6055			1.39	Si
SLV 15	1.57	-25042	-8290	-3004.83		50948	1.7554	16250	7987			0.96	No, Vu<V
SLV 15	3.47	-29895	-6693	4971.28		60822	1.7554	16250	7987			1.19	Si
SLV 10	1.57	-4159	-3053	-1269.21		8648	1.7177	10063	4840			1.59	Si
SLV 10	3.47	-9090	-3685	1797.33		18494	1.7554	12032	5914			1.61	Si
SLV 16	1.57	-25042	-8290	-3004.83		50948	1.7554	16250	7987			0.96	No, Vu<V
SLV 16	3.47	-29895	-6693	4971.28		60822	1.7554	16250	7987			1.19	Si
SLV 3	1.57	-16055	5234	4082.58		32664	1.7554	14866	7307			1.4	Si
SLV 3	3.47	-9794	4363	-1813.99		19926	1.7554	12319	6055			1.39	Si
SLV 14	1.57	-16855	-8057	-3348.66		34293	1.7554	15192	7467			0.93	No, Vu<V
SLV 14	3.47	-23540	-7090	4602.47		47892	1.7554	16250	7987			1.13	Si
SLV 2	1.57	-7868	5466	3738.75		23270	1.2076	12987	4392			0.8	No, Vu<V
SLV 2	3.47	-3439	3965	-2182.81		16851	0.7289	11703	2388			0.6	No, Vu<V
SLV 1	1.57	-7868	5466	3738.75		23270	1.2076	12987	4392			0.8	No, Vu<V
SLV 1	3.47	-3439	3965	-2182.81		16851	0.7289	11703	2388			0.6	No, Vu<V
SLV 13	1.57	-16855	-8057	-3348.66		34293	1.7554	15192	7467			0.93	No, Vu<V
SLV 13	3.47	-23540	-7090	4602.47		47892	1.7554	16250	7987			1.13	Si

Verifica a pressoflessione fuori piano D.M. 17-01-18 (N.T.C.)

quota 2.51 Wa 0.05 denominatore 8 γM = 2

Comb.	fd	Sa	σ0	N	M	Mc	Coeff.s.	Verifica
SLV 5	143750	0.3	5110	-2512	152.35	336.91	2.21	Si
SLV 6	143750	0.3	5110	-2512	152.35	336.91	2.21	Si
SLV 1	143750	0.3	9950	-4891	152.35	628.94	4.13	Si
SLV 2	143750	0.3	9950	-4891	152.35	628.94	4.13	Si
SLV 9	143750	0.3	15356	-7548	152.35	923.89	6.06	Si
SLV 10	143750	0.3	15356	-7548	152.35	923.89	6.06	Si
SLV 3	143750	0.3	24346	-11966	152.35	1341.48	8.81	Si
SLV 4	143750	0.3	24346	-11966	152.35	1341.48	8.81	Si
SLV 14	143750	0.3	44105	-21678	152.35	1939.46	12.73	Si
SLV 13	143750	0.3	44105	-21678	152.35	1939.46	12.73	Si

Verifica dei meccanismi locali di collasso con analisi cinematica lineare

forza di aggancio al piano = 0 quota mezzeria = 2.51 Wa = 0.05 Ta = 0.0808

Comb.	N top	N base	V orto	α0	M*	e*	a0*	aLim	Verifica
SLV 13	-16756	-18553	25	0.04	1960.9	0.961	0.60528	10.39734	No
SLV 14	-16756	-18553	25	0.04	1960.9	0.961	0.60528	10.39734	No
SLV 16	-21357	-26277	-2	0.041	2429.1	0.968	0.6103	10.39734	No
SLV 15	-21357	-26277	-2	0.041	2429.1	0.968	0.6103	10.39734	No
SLV 3	-9745	-12532	-24	0.041	1248.7	0.942	0.6383	10.39734	No
SLV 4	-9745	-12532	-24	0.041	1248.7	0.942	0.6383	10.39734	No
SLV 11	-22661	-30478	-41	0.039	2561.7	0.97	0.58283	9.1791	No
SLV 12	-22661	-30478	-41	0.039	2561.7	0.97	0.58283	9.1791	No
SLV 8	-19177	-26354	-48	0.039	2207.1	0.965	0.58288	9.1791	No
SLV 7	-19177	-26354	-48	0.039	2207.1	0.965	0.58288	9.1791	No

Tabella dei coefficienti di sicurezza minimi

Stato limite	Coeff.s.	Comb.	Verifica
PF_SLU	3.609	SLU 83	Si
V_SLU	2.206	SLU 84	Si
PF_SLV	1.304	SLV 1	Si
V_SLV	0.602	SLV 1	No
PFFP_SLV	2.211	SLV 5	Si
R_SLV	0.058	SLV 13	No

Maschio 110

Verifiche condotte secondo D.M. 17-01-18 (N.T.C.)

Dati geometrici

X ini.	Y ini.	X fin.	Y fin.	Quota i.	Quota.s	l	Sp.	h netta	h ini.	h fin.	a	a.s.,sx	a.s.,dx
-0.134	-3.248	-0.134	5.83	L3	L4	9.078	0.28	3.68	3.68	3.68			

Caratteristiche del materiale

(Circolare 7 21-01-19 C8.5.I) Muratura in mattoni pieni e malta di calce LC2_Corti

fb	fk	fvk0	fmedio	τ0	fv0	μ	ϕ	fv,lim	E	G	FC
600000			345000	9000	20000	0.58	0.77	32500	320000000	128000000	1.2

Verifica a pressoflessione nel piano secondo D.M. 17-01-18 NTC §7.8.2.2.1 in combinazioni non sismiche, γM = 3

Comb.	Quota	N	M	σ0	Mu	c.s.	Verifica
SLU 84	0.67	-100111	125635.41	39385	234699.2	1.868	Si
SLU 84	4.35	-93034	39959.17	36601	232541.59	5.819	Si
SLU 77	0.67	-100390	125291.99	39495	234739.31	1.874	Si
SLU 77	4.35	-93604	38673.96	36825	232796.32	6.019	Si
SLU 79	0.67	-99688	124578.25	39219	234631.92	1.883	Si
SLU 79	4.35	-92750	38588.37	36489	232408.95	6.023	Si
SLU 81	0.67	-99293	122713.14	39063	234562.12	1.911	Si
SLU 81	4.35	-92051	36956.05	36214	232067.9	6.28	Si
SLU 83	0.67	-101227	125755.27	39824	234839.1	1.867	Si
SLU 83	4.35	-94085	38327.59	37014	233000.68	6.079	Si
SLU 82	0.67	-98177	122593.29	38624	234327.57	1.911	Si
SLU 82	4.35	-91000	38587.64	35801	231515.13	6	Si
SLU 74	0.67	-98456	122249.87	38734	234391.34	1.917	Si
SLU 74	4.35	-91570	37302.43	36025	231820.61	6.215	Si
SLU 78	0.67	-99273	125172.13	39056	234558.43	1.874	Si
SLU 78	4.35	-92553	40305.54	36412	232315.06	5.764	Si
SLU 75	0.67	-97340	122130.01	38295	234115.82	1.917	Si
SLU 75	4.35	-90519	38934.01	35612	231245.66	5.939	Si
SLU 80	0.67	-98571	124458.39	38779	234416.68	1.883	Si
SLU 80	4.35	-91699	40219.96	36076	231888.38	5.766	Si

Verifica a pressoflessione nel piano secondo D.M. 17-01-18 NTC §7.8.2.2.1 in combinazioni sismiche, γM = 2

Comb.	Quota	N	M	σ0	Mu	c.s.	Verifica
SLV 15	0.67	-114470	155484.89	45034	328079.97	2.11	Si
SLV 15	4.35	-97163	40761.48	38225	303052.62	7.435	Si
SLV 12	0.67	-96379	175331.24	37917	301711.81	1.721	Si
SLV 12	4.35	-80424	73494.85	31640	270518.63	3.681	Si
SLV 13	0.67	-104945	109476.18	41287	315388.87	2.881	Si
SLV 13	4.35	-92271	12221.04	36301	294391.43	24.089	Si
SLV 16	0.67	-114470	155484.89	45034	328079.97	2.11	Si
SLV 16	4.35	-97163	40761.48	38225	303052.62	7.435	Si
SLV 14	0.67	-104945	109476.18	41287	315388.87	2.881	Si
SLV 14	4.35	-92271	12221.04	36301	294391.43	24.089	Si
SLV 11	0.67	-96379	175331.24	37917	301711.81	1.721	Si
SLV 11	4.35	-80424	73494.85	31640	270518.63	3.681	Si

Comb.	Quota	N	M	σ0	Mu	c.s.	Verifica
SLV 3	0.67	-31031	58826.38	12208	126777.01	2.155	Si
SLV 3	4.35	-33032	39150.58	12995	133986.16	3.422	Si
SLV 8	0.67	-71347	146333.69	28069	249451.66	1.705	Si
SLV 8	4.35	-61185	73011.58	24071	223008.14	3.054	Si
SLV 4	0.67	-31031	58826.38	12208	126777.01	2.155	Si
SLV 4	4.35	-33032	39150.58	12995	133986.16	3.422	Si
SLV 7	0.67	-71347	146333.69	28069	249451.66	1.705	Si
SLV 7	4.35	-61185	73011.58	24071	223008.14	3.054	Si

Verifica a taglio nel piano secondo D.M. 17-01-18 (N.T.C.) §7.8.2.2.2 con rottura per scorrimento in combinazioni non sismiche, γM = 3

Comb.	Quota	N	V par	M	σ0	σN	l'	fvd	Vt scorr.	Vt fess.diag.	Vt,lim	c.s.	Verifica
SLU 56	0.67	-92192	2057	115109.56		36270	9.078	10392	26414			12.84	Si
SLU 56	4.35	-85576	69	35787.63		33667	9.078	10045	25532			369.23	Si
SLU 58	0.67	-91490	2042	114395.82		35993	9.078	10355	26320			12.89	Si
SLU 58	4.35	-84723	72	35702.04		33331	9.078	10000	25418			354.47	Si
SLU 69	0.67	-92286	2059	115447.33		36307	9.078	10396	26426			12.83	Si
SLU 69	4.35	-85742	71	36082.22		33732	9.078	10053	25554			359.93	Si
SLU 81	0.67	-99293	2199	122713.14		39063	9.078	10764	27360			12.44	Si
SLU 81	4.35	-92051	47	36956.05		36214	9.078	10384	26395			563.45	Si
SLU 62	0.67	-93029	2070	115572.84		36599	9.078	10435	26525			12.81	Si
SLU 62	4.35	-86058	59	35441.25		33856	9.078	10070	25596			433.08	Si
SLU 83	0.67	-101227	2243	125755.27		39824	9.078	10833	27537			12.28	Si
SLU 83	4.35	-94085	58	38327.59		37014	9.078	10491	26666			457.21	Si
SLU 71	0.67	-91584	2044	114733.59		36031	9.078	10360	26333			12.88	Si
SLU 71	4.35	-84889	74	35996.64		33397	9.078	10008	25440			345.87	Si
SLU 79	0.67	-99688	2214	124578.25		39219	9.078	10785	27413			12.38	Si
SLU 79	4.35	-92750	71	38588.37		36489	9.078	10421	26488			373.46	Si
SLU 74	0.67	-98456	2185	122249.87		38734	9.078	10720	27249			12.47	Si
SLU 74	4.35	-91570	57	37302.43		36025	9.078	10359	26331			462.83	Si
SLU 77	0.67	-100390	2229	125291.99		39495	9.078	10822	27507			12.34	Si
SLU 77	4.35	-93604	68	38673.96		36825	9.078	10466	26602			389.09	Si

Verifica a taglio nel piano secondo D.M. 17-01-18 (N.T.C.) §7.8.2.2.2 con rottura per scorrimento in combinazioni sismiche, γM = 2

Comb.	Quota	N	V par	M	σ0	σN	l'	fvd	Vt scorr.	Vt fess.diag.	Vt,lim	c.s.	Verifica
SLV 6	0.67	-39597	-35465	-7028.68		15578	9.078	11449	29101			0.82	No, Vu<V
SLV 6	4.35	-44879	-24597	-22123.23		17656	9.078	11865	30158			1.23	Si
SLV 9	0.67	-64628	-36324	21968.87		25426	9.078	13418	34108			0.94	No, Vu<V
SLV 9	4.35	-64118	-24305	-21639.96		25225	9.078	13378	34006			1.4	Si
SLV 8	0.67	-71347	39354	146333.69		34139	7.464	15161	31686			0.81	No, Vu<V
SLV 8	4.35	-61185	24382	73011.58		24071	9.078	13148	33419			1.37	Si
SLV 10	0.67	-64628	-36324	21968.87		25426	9.078	13418	34108			0.94	No, Vu<V
SLV 10	4.35	-64118	-24305	-21639.96		25225	9.078	13378	34006			1.4	Si
SLV 12	0.67	-96379	38496	175331.24		42186	8.1595	16250	37126			0.96	No, Vu<V
SLV 12	4.35	-80424	24673	73494.85		31640	9.078	14661	37267			1.51	Si
SLV 4	0.67	-31031	14169	58826.38		13976	7.9298	11128	24709			1.74	Si
SLV 4	4.35	-33032	6899	39150.58		12995	9.078	10932	27788			4.03	Si
SLV 3	0.67	-31031	14169	58826.38		13976	7.9298	11128	24709			1.74	Si
SLV 3	4.35	-33032	6899	39150.58		12995	9.078	10932	27788			4.03	Si
SLV 7	0.67	-71347	39354	146333.69		34139	7.464	15161	31686			0.81	No, Vu<V
SLV 7	4.35	-61185	24382	73011.58		24071	9.078	13148	33419			1.37	Si
SLV 11	0.67	-96379	38496	175331.24		42186	8.1595	16250	37126			0.96	No, Vu<V
SLV 11	4.35	-80424	24673	73494.85		31640	9.078	14661	37267			1.51	Si
SLV 5	0.67	-39597	-35465	-7028.68		15578	9.078	11449	29101			0.82	No, Vu<V
SLV 5	4.35	-44879	-24597	-22123.23		17656	9.078	11865	30158			1.23	Si

Verifica a pressoflessione fuori piano D.M. 17-01-18 (N.T.C.)

quota 2.51 Wa 0.05 denominatore 8 γM = 2

Comb.	fd	Sa	σ0	N	M	Mc	Coeff.s.	Verifica
SLV 1	143750	0.3	11064	-28122	787.87	3580.64	4.54	Si
SLV 2	143750	0.3	11064	-28122	787.87	3580.64	4.54	Si
SLV 4	143750	0.3	13650	-34696	787.87	4314.76	5.48	Si
SLV 3	143750	0.3	13650	-34696	787.87	4314.76	5.48	Si
SLV 6	143750	0.3	18611	-47306	787.87	5614.12	7.13	Si
SLV 5	143750	0.3	18611	-47306	787.87	5614.12	7.13	Si
SLV 7	143750	0.3	27231	-69217	787.87	7530.75	9.56	Si
SLV 8	143750	0.3	27231	-69217	787.87	7530.75	9.56	Si
SLV 9	143750	0.3	27666	-70323	787.87	7616.02	9.67	Si
SLV 10	143750	0.3	27666	-70323	787.87	7616.02	9.67	Si

Verifica dei meccanismi locali di collasso con analisi cinematica lineare

forza di aggancio al piano = 0 quota mezzeria = 2.51 Wa = 0.05 Ta = 0.0808

Comb.	N top	N base	V orto	α0	M*	e*	a0*	aLim	Verifica
SLV 14	-92271	-104945	-146	0.04	10711.8	0.963	0.6002	10.39734	No
SLV 13	-92271	-104945	-146	0.04	10711.8	0.963	0.6002	10.39734	No
SLV 16	-97163	-114470	-114	0.04	11209.5	0.965	0.60257	10.39734	No
SLV 15	-97163	-114470	-114	0.04	11209.5	0.965	0.60257	10.39734	No
SLV 4	-33032	-31031	147	0.042	4702.9	0.925	0.6633	10.39734	No
SLV 3	-33032	-31031	147	0.042	4702.9	0.925	0.6633	10.39734	No
SLV 2	-28140	-21506	115	0.044	4211.6	0.919	0.69058	10.39734	No
SLV 1	-28140	-21506	115	0.044	4211.6	0.919	0.69058	10.39734	No
SLV 12	-80424	-96379	14	0.041	9506.8	0.959	0.62884	9.1791	No
SLV 11	-80424	-96379	14	0.041	9506.8	0.959	0.62884	9.1791	No

Tabella dei coefficienti di sicurezza minimi

Stato limite	Coeff.s.	Comb.	Verifica
PF_SLU	1.867	SLU 83	Si
V_SLU	12.277	SLU 83	Si
PF_SLV	1.705	SLV 7	Si
V_SLV	0.805	SLV 7	No

Stato limite	Coeff.s.	Comb.	Verifica
PFFP_SLV	4.545	SLV 1	Si
R_SLV	0.058	SLV 13	No

Maschio 111

Verifiche condotte secondo D.M. 17-01-18 (N.T.C.)

Dati geometrici

X ini.	Y ini.	X fin.	Y fin.	Quota i.	Quota.s	l	Sp.	h netta	h ini.	h fin.	a	a.s.,sx	a.s.,dx
-24.643	-3.254	-24.643	1.321	L4	L5	4.576	0.28	3.55	3.55	3.55			

Caratteristiche del materiale

(Circolare 7 21-01-19 C8.5.I) Muratura in mattoni pieni e malta di calce LC2_Corti

fb	fk	fvk0	fmedio	τ0	fv0	μ	ϕ	fv,lim	E	G	FC
600000			345000	9000	20000	0.58	0.77	32500	320000000	128000000	1.2

Verifica a pressoflessione nel piano secondo D.M. 17-01-18 NTC §7.8.2.2.1 in combinazioni non sismiche, γM = 3

Comb.	Quota	N	M	σ0	Mu	c.s.	Verifica
SLU 77	4.35	-60172	7056.64	46965	58294.56	8.261	Si
SLU 77	6.45	-47234	4779.65	36867	59157.04	12.377	Si
SLU 83	4.35	-60744	7180.98	47412	58086.99	8.089	Si
SLU 83	6.45	-47439	4763.14	37027	59200.57	12.429	Si
SLU 74	4.35	-59153	6894.93	46169	58628.83	8.503	Si
SLU 74	6.45	-46320	4754.57	36153	58940.37	12.397	Si
SLU 75	4.35	-58547	6734.63	45697	58805.92	8.732	Si
SLU 75	6.45	-46064	4808.45	35953	58873.14	12.244	Si
SLU 80	4.35	-58974	6816.39	46030	58682.8	8.609	Si
SLU 80	6.45	-46452	4771.82	36257	58974.03	12.359	Si
SLU 79	4.35	-59580	6976.69	46503	58494.37	8.384	Si
SLU 79	6.45	-46708	4717.94	36456	59036.9	12.513	Si
SLU 82	4.35	-59119	6858.97	46143	58639.11	8.549	Si
SLU 82	6.45	-46269	4791.95	36113	58927.17	12.297	Si
SLU 78	4.35	-59566	6896.34	46492	58498.73	8.483	Si
SLU 78	6.45	-46978	4833.53	36667	59100.07	12.227	Si
SLU 84	4.35	-60138	7020.68	46939	58306.35	8.305	Si
SLU 84	6.45	-47183	4817.02	36827	59145.89	12.279	Si
SLU 81	4.35	-59725	7019.27	46616	58446.82	8.327	Si
SLU 81	6.45	-46525	4738.07	36313	58992.1	12.451	Si

Verifica a pressoflessione nel piano secondo D.M. 17-01-18 NTC §7.8.2.2.1 in combinazioni sismiche, γM = 2

Comb.	Quota	N	M	σ0	Mu	c.s.	Verifica
SLV 10	4.35	-41346	-12360.84	32271	69610.91	5.632	Si
SLV 10	6.45	-35571	3579.95	27764	62890.75	17.568	Si
SLV 9	4.35	-41346	-12360.84	32271	69610.91	5.632	Si
SLV 9	6.45	-35571	3579.95	27764	62890.75	17.568	Si
SLV 11	4.35	-25877	20666.93	20198	49417.72	2.391	Si
SLV 11	6.45	-18330	4154.51	14307	37026.74	8.912	Si
SLV 15	4.35	-14800	8246.1	11551	30658.75	3.718	Si
SLV 15	6.45	-13037	4892.26	10175	27343.07	5.589	Si
SLV 6	4.35	-55481	-11622.74	43304	81948.46	7.051	Si
SLV 6	6.45	-45281	2775.21	35342	73631.87	26.532	Si
SLV 8	4.35	-40013	21405.03	31231	68146.4	3.184	Si
SLV 8	6.45	-28039	3349.77	21885	52660.81	15.721	Si
SLV 16	4.35	-14800	8246.1	11551	30658.75	3.718	Si
SLV 16	6.45	-13037	4892.26	10175	27343.07	5.589	Si
SLV 12	4.35	-25877	20666.93	20198	49417.72	2.391	Si
SLV 12	6.45	-18330	4154.51	14307	37026.74	8.912	Si
SLV 5	4.35	-55481	-11622.74	43304	81948.46	7.051	Si
SLV 5	6.45	-45281	2775.21	35342	73631.87	26.532	Si
SLV 7	4.35	-40013	21405.03	31231	68146.4	3.184	Si
SLV 7	6.45	-28039	3349.77	21885	52660.81	15.721	Si

Verifica a taglio nel piano secondo D.M. 17-01-18 (N.T.C.) §7.8.2.2.2 con rottura per scorrimento in combinazioni non sismiche, γM = 3

Comb.	Quota	N	V par	M	σ0	σN	l'	fvd	Vt scorr.	Vt fess.diag.	Vt,lim	c.s.	Verifica
SLU 58	4.35	-54487	3052	6144.65		42527	4.5758	10833	13880			4.55	Si
SLU 58	6.45	-42787	3051	4506.55		33395	4.5758	10008	12823			4.2	Si
SLU 50	4.35	-49391	2911	5290.63		38550	4.5758	10696	13703			4.71	Si
SLU 50	6.45	-38949	2910	4342.57		30400	4.5758	9609	12311			4.23	Si
SLU 79	4.35	-59580	3231	6976.69		46503	4.5758	10833	13880			4.3	Si
SLU 79	6.45	-46708	3230	4717.94		36456	4.5758	10416	13346			4.13	Si
SLU 71	4.35	-54484	3090	6122.67		42526	4.5758	10833	13880			4.49	Si
SLU 71	6.45	-42870	3089	4553.96		33461	4.5758	10017	12834			4.15	Si
SLU 77	4.35	-60172	3196	7056.64		46965	4.5758	10833	13880			4.34	Si
SLU 77	6.45	-47234	3195	4779.65		36867	4.5758	10471	13416			4.2	Si
SLU 83	4.35	-60744	3083	7180.98		47412	4.5758	10833	13880			4.5	Si
SLU 83	6.45	-47439	3082	4763.14		37027	4.5758	10492	13443			4.36	Si
SLU 56	4.35	-55079	3017	6224.6		42990	4.5758	10833	13880			4.6	Si
SLU 56	6.45	-43313	3016	4568.26		33806	4.5758	10063	12893			4.27	Si
SLU 48	4.35	-49983	2877	5370.58		39013	4.5758	10757	13782			4.79	Si
SLU 48	6.45	-39474	2875	4404.28		30810	4.5758	9664	12381			4.31	Si
SLU 69	4.35	-55077	3055	6202.62		42988	4.5758	10833	13880			4.54	Si
SLU 69	6.45	-43396	3054	4615.67		33871	4.5758	10072	12904			4.23	Si
SLU 62	4.35	-55651	2904	6348.94		43436	4.5758	10833	13880			4.78	Si
SLU 62	6.45	-43517	2903	4551.76		33966	4.5758	10084	12920			4.45	Si

Verifica a taglio nel piano secondo D.M. 17-01-18 (N.T.C.) §7.8.2.2.2 con rottura per scorrimento in combinazioni sismiche, γM = 2

Comb.	Quota	N	V par	M	σ0	σN	l'	fvd	Vt scorr.	Vt fess.diag.	Vt,lim	c.s.	Verifica
SLV 11	4.35	-25877	15377	20666.93		20686	4.4677	12471	15600			1.01	Si
SLV 11	6.45	-18330	12474	4154.51		14307	4.5758	11195	14343			1.15	Si
SLV 6	4.35	-55481	-11262	-11622.74		43304	4.5758	16250	20820			1.85	Si
SLV 6	6.45	-45281	-8361	2775.21		35342	4.5758	15402	19733			2.36	Si
SLV 10	4.35	-41346	-12510	-12360.84		32271	4.5758	14787	18946			1.51	Si
SLV 10	6.45	-35571	-9688	3579.95		27764	4.5758	13886	17791			1.84	Si
SLV 4	4.35	-61919	8321	10706.42		48328	4.5758	16250	20820			2.5	Si
SLV 4	6.45	-45401	7594	2209.82		35436	4.5758	15421	19757			2.6	Si
SLV 9	4.35	-41346	-12510	-12360.84		32271	4.5758	14787	18946			1.51	Si
SLV 9	6.45	-35571	-9688	3579.95		27764	4.5758	13886	17791			1.84	Si
SLV 8	4.35	-40013	16625	21405.03		31231	4.5758	14579	18679			1.12	Si
SLV 8	6.45	-28039	13802	3349.77		21885	4.5758	12710	16285			1.18	Si
SLV 12	4.35	-25877	15377	20666.93		20686	4.4677	12471	15600			1.01	Si
SLV 12	6.45	-18330	12474	4154.51		14307	4.5758	11195	14343			1.15	Si
SLV 3	4.35	-61919	8321	10706.42		48328	4.5758	16250	20820			2.5	Si
SLV 3	6.45	-45401	7594	2209.82		35436	4.5758	15421	19757			2.6	Si
SLV 5	4.35	-55481	-11262	-11622.74		43304	4.5758	16250	20820			1.85	Si
SLV 5	6.45	-45281	-8361	2775.21		35342	4.5758	15402	19733			2.36	Si
SLV 7	4.35	-40013	16625	21405.03		31231	4.5758	14579	18679			1.12	Si
SLV 7	6.45	-28039	13802	3349.77		21885	4.5758	12710	16285			1.18	Si

Verifica a pressoflessione fuori piano D.M. 17-01-18 (N.T.C.)

quota 6.125 Wa 0.05 denominatore 8 γM = 2

Comb.	fd	Sa	σ0	N	M	Mc	Coeff.s.	Verifica
SLV 16	143750	0.38	10802	-13839	465.56	1766.24	3.79	Si
SLV 15	143750	0.38	10802	-13839	465.56	1766.24	3.79	Si
SLV 14	143750	0.38	14862	-19042	465.56	2341.61	5.03	Si
SLV 13	143750	0.38	14862	-19042	465.56	2341.61	5.03	Si
SLV 11	143750	0.38	14905	-19097	465.56	2347.43	5.04	Si
SLV 12	143750	0.38	14905	-19097	465.56	2347.43	5.04	Si
SLV 8	143750	0.38	22483	-28806	465.56	3290.77	7.07	Si
SLV 7	143750	0.38	22483	-28806	465.56	3290.77	7.07	Si
SLV 9	143750	0.38	28441	-36439	465.56	3914.01	8.41	Si
SLV 10	143750	0.38	28441	-36439	465.56	3914.01	8.41	Si

Verifica dei meccanismi locali di collasso con analisi cinematica lineare

forza di aggancio al piano = 0 quota mezzeria = 6.125 Wa = 0.05 Ta = 0.0752

Comb.	N top	N base	V orto	α0	M*	e*	a0*	aLim	Verifica
SLV 1	-37522	-66559	8	0.043	4461.5	0.958	0.65449	11.26714	No
SLV 2	-37522	-66559	8	0.043	4461.5	0.958	0.65449	11.26714	No
SLV 3	-33957	-61919	4	0.044	4099.2	0.954	0.66382	11.26714	No
SLV 4	-33957	-61919	4	0.044	4099.2	0.954	0.66382	11.26714	No
SLV 6	-33823	-55481	10	0.043	4085.7	0.954	0.6617	9.97238	No
SLV 5	-33823	-55481	10	0.043	4085.7	0.954	0.6617	9.97238	No
SLV 13	-15073	-19440	-2	0.048	2187.3	0.923	0.7522	11.26714	No
SLV 14	-15073	-19440	-2	0.048	2187.3	0.923	0.7522	11.26714	No
SLV 9	-27089	-41346	7	0.044	3401.9	0.946	0.68209	9.97238	No
SLV 10	-27089	-41346	7	0.044	3401.9	0.946	0.68209	9.97238	No

Tabella dei coefficienti di sicurezza minimi

Stato limite	Coeff.s.	Comb.	Verifica
PF_SLU	8.089	SLU 83	Si
V_SLU	4.132	SLU 79	Si
PF_SLV	2.391	SLV 11	Si
V_SLV	1.014	SLV 11	Si
PFFP_SLV	3.794	SLV 15	Si
R_SLV	0.058	SLV 1	No

Maschio 112

Verifiche condotte secondo D.M. 17-01-18 (N.T.C.)

Dati geometrici

X ini.	Y ini.	X fin.	Y fin.	Quota i.	Quota.s	l	Sp.	h netta	h ini.	h fin.	a	a.s.,sx	a.s.,dx
-24.643	2.121	-24.643	5.798	L4	L5	3.676	0.28	3.55	3.55	3.55			

Caratteristiche del materiale

(Circolare 7 21-01-19 C8.5.I) Muratura in mattoni pieni e malta di calce LC2_Corti

fb	fk	fvk0	fmedio	τ0	fv0	μ	ϕ	fv,lim	E	G	FC
600000			345000	9000	20000	0.58	0.77	32500	320000000	128000000	1.2

Verifica a pressoflessione nel piano secondo D.M. 17-01-18 NTC §7.8.2.2.1 in combinazioni non sismiche, γM = 3

Comb.	Quota	N	M	σ0	Mu	c.s.	Verifica
SLU 81	4.35	-45775	-5527.34	44469	38207.88	6.913	Si
SLU 81	6.45	-37641	-4738	36567	38130.3	8.048	Si
SLU 75	4.35	-45552	-5647.92	44253	38244.41	6.771	Si
SLU 75	6.45	-37393	-4293.1	36326	38082.43	8.871	Si
SLU 82	4.35	-45628	-5676.48	44326	38232.23	6.735	Si
SLU 82	6.45	-37436	-4557.59	36368	38091.03	8.358	Si
SLU 78	4.35	-46627	-5686.85	45297	38048.14	6.691	Si
SLU 78	6.45	-38323	-4222.39	37230	38248.33	9.058	Si
SLU 73	4.35	-43998	-5658.95	42743	38438.62	6.793	Si
SLU 73	6.45	-35940	-4146.28	34914	37747.42	9.104	Si
SLU 76	4.35	-45073	-5697.88	43787	38315.61	6.725	Si
SLU 76	6.45	-36870	-4075.57	35818	37972.58	9.317	Si

Comb.	Quota	N	M	σ0	Mu	c.s.	Verifica
SLU 83	4.35	-46850	-5566.27	45513	38001.11	6.827	Si
SLU 83	6.45	-38571	-4667.29	37470	38286.1	8.203	Si
SLU 84	4.35	-46703	-5715.41	45370	38032.4	6.654	Si
SLU 84	6.45	-38367	-4486.88	37272	38255.15	8.526	Si
SLU 80	4.35	-46246	-5637.39	44926	38123.57	6.763	Si
SLU 80	6.45	-37937	-4125.13	36854	38184.01	9.256	Si
SLU 77	4.35	-46774	-5537.71	45440	38017.34	6.865	Si
SLU 77	6.45	-38527	-4402.8	37428	38279.66	8.694	Si

Verifica a pressoflessione nel piano secondo D.M. 17-01-18 NTC §7.8.2.2.1 in combinazioni sismiche, γM = 2

Comb.	Quota	N	M	σ0	Mu	c.s.	Verifica
SLV 13	4.35	-16165	-6028.88	15703	25894.41	4.295	Si
SLV 13	6.45	-12123	622.9	11777	20136.45	32.327	Si
SLV 1	4.35	-41564	-9304.56	40378	51153.71	5.498	Si
SLV 1	6.45	-32327	-5595.72	31405	44149.85	7.89	Si
SLV 5	4.35	-26556	-16792.68	25798	38507.58	2.293	Si
SLV 5	6.45	-17264	-2310.82	16771	27378.04	11.848	Si
SLV 9	4.35	-18936	-15809.98	18396	29567.12	1.87	Si
SLV 9	6.45	-11203	-445.23	10883	18758.11	42.131	Si
SLV 11	4.35	-36417	8860.35	35378	47558.49	5.368	Si
SLV 11	6.45	-34037	-3612.04	33066	45634.29	12.634	Si
SLV 12	4.35	-36417	8860.35	35378	47558.49	5.368	Si
SLV 12	6.45	-34037	-3612.04	33066	45634.29	12.634	Si
SLV 2	4.35	-41564	-9304.56	40378	51153.71	5.498	Si
SLV 2	6.45	-32327	-5595.72	31405	44149.85	7.89	Si
SLV 14	4.35	-16165	-6028.88	15703	25894.41	4.295	Si
SLV 14	6.45	-12123	622.9	11777	20136.45	32.327	Si
SLV 6	4.35	-26556	-16792.68	25798	38507.58	2.293	Si
SLV 6	6.45	-17264	-2310.82	16771	27378.04	11.848	Si
SLV 10	4.35	-18936	-15809.98	18396	29567.12	1.87	Si
SLV 10	6.45	-11203	-445.23	10883	18758.11	42.131	Si

Verifica a taglio nel piano secondo D.M. 17-01-18 (N.T.C.) §7.8.2.2.2 con rottura per scorrimento in combinazioni non sismiche, γM = 3

Comb.	Quota	N	V par	M	σ0	σN	I'	fvd	Vt scorr.	Vt fess.diag.	Vt,lim	c.s.	Verifica
SLU 80	4.35	-46246	-3426	-5637.39		44926	3.6763	10833	11152			3.25	Si
SLU 80	6.45	-37937	-3427	-4125.13		36854	3.6763	10469	10777			3.15	Si
SLU 55	4.35	-41350	-3198	-5408.01		40170	3.6763	10833	11152			3.49	Si
SLU 55	6.45	-33582	-3199	-3479.67		32624	3.6763	9905	10196			3.19	Si
SLU 47	4.35	-37775	-3041	-5135.1		36697	3.6763	10449	10755			3.54	Si
SLU 47	6.45	-30408	-3042	-2800.59		29540	3.6763	9494	9773			3.21	Si
SLU 59	4.35	-42523	-3240	-5347.51		41310	3.6763	10833	11152			3.44	Si
SLU 59	6.45	-34648	-3240	-3529.24		33660	3.6763	10044	10338			3.19	Si
SLU 70	4.35	-43052	-3242	-5413.95		41824	3.6763	10833	11152			3.44	Si
SLU 70	6.45	-35149	-3242	-3543.31		34146	3.6763	10108	10405			3.21	Si
SLU 68	4.35	-41498	-3228	-5424.98		40314	3.6763	10833	11152			3.45	Si
SLU 68	6.45	-33696	-3229	-3396.49		32735	3.6763	9920	10212			3.16	Si
SLU 78	4.35	-46627	-3399	-5686.85		45297	3.6763	10833	11152			3.28	Si
SLU 78	6.45	-38323	-3399	-4222.39		37230	3.6763	10520	10828			3.19	Si
SLU 72	4.35	-42671	-3269	-5364.48		41454	3.6763	10833	11152			3.41	Si
SLU 72	6.45	-34763	-3269	-3446.06		33771	3.6763	10058	10354			3.17	Si
SLU 76	4.35	-45073	-3385	-5697.88		43787	3.6763	10833	11152			3.29	Si
SLU 76	6.45	-36870	-3386	-4075.57		35818	3.6763	10331	10635			3.14	Si
SLU 51	4.35	-38948	-3082	-5074.61		37837	3.6763	10600	10912			3.54	Si
SLU 51	6.45	-31474	-3083	-2850.16		30576	3.6763	9632	9915			3.22	Si

Verifica a taglio nel piano secondo D.M. 17-01-18 (N.T.C.) §7.8.2.2.2 con rottura per scorrimento in combinazioni sismiche, γM = 2

Comb.	Quota	N	V par	M	σ0	σN	I'	fvd	Vt scorr.	Vt fess.diag.	Vt,lim	c.s.	Verifica
SLV 5	4.35	-26556	-13601	-16792.68		26218	3.6174	13577	13752			1.01	Si
SLV 5	6.45	-17264	-11546	-2310.82		16771	3.6763	11688	12031			1.04	Si
SLV 8	4.35	-44037	8488	7877.65		42780	3.6763	16250	16727			1.97	Si
SLV 8	6.45	-40098	6374	-5477.63		38954	3.6763	16124	16598			2.6	Si
SLV 10	4.35	-18936	-12657	-15809.98		22470	3.0097	12827	10810			0.85	No, Vu<V
SLV 10	6.45	-11203	-10543	-445.23		10883	3.6763	10510	10819			1.03	Si
SLV 2	4.35	-41564	-6970	-9304.56		40378	3.6763	16250	16727			2.4	Si
SLV 2	6.45	-32327	-6444	-5595.72		31405	3.6763	14614	15044			2.33	Si
SLV 11	4.35	-36417	9431	8860.35		35378	3.6763	15409	15861			1.68	Si
SLV 11	6.45	-34037	7377	-3612.04		33066	3.6763	14947	15385			2.09	Si
SLV 9	4.35	-18936	-12657	-15809.98		22470	3.0097	12827	10810			0.85	No, Vu<V
SLV 9	6.45	-11203	-10543	-445.23		10883	3.6763	10510	10819			1.03	Si
SLV 6	4.35	-26556	-13601	-16792.68		26218	3.6174	13577	13752			1.01	Si
SLV 6	6.45	-17264	-11546	-2310.82		16771	3.6763	11688	12031			1.04	Si
SLV 12	4.35	-36417	9431	8860.35		35378	3.6763	15409	15861			1.68	Si
SLV 12	6.45	-34037	7377	-3612.04		33066	3.6763	14947	15385			2.09	Si
SLV 1	4.35	-41564	-6970	-9304.56		40378	3.6763	16250	16727			2.4	Si
SLV 1	6.45	-32327	-6444	-5595.72		31405	3.6763	14614	15044			2.33	Si
SLV 7	4.35	-44037	8488	7877.65		42780	3.6763	16250	16727			1.97	Si
SLV 7	6.45	-40098	6374	-5477.63		38954	3.6763	16124	16598			2.6	Si

Verifica a pressoflessione fuori piano D.M. 17-01-18 (N.T.C.)

quota 6.125 Wa 0.05 denominatore 8 γM = 2

Comb.	fd	Sa	σ0	N	M	Mc	Coeff.s.	Verifica
SLV 9	143750	0.38	11492	-11829	374.05	1500.35	4.01	Si
SLV 10	143750	0.38	11492	-11829	374.05	1500.35	4.01	Si
SLV 13	143750	0.38	12382	-12746	374.05	1603.62	4.29	Si
SLV 14	143750	0.38	12382	-12746	374.05	1603.62	4.29	Si
SLV 6	143750	0.38	17396	-17907	374.05	2150.07	5.75	Si
SLV 5	143750	0.38	17396	-17907	374.05	2150.07	5.75	Si
SLV 16	143750	0.38	19050	-19610	374.05	2317.33	6.2	Si
SLV 15	143750	0.38	19050	-19610	374.05	2317.33	6.2	Si
SLV 1	143750	0.38	32064	-33006	374.05	3408.21	9.11	Si

Comb.	fd	Sa	σ0	N	M	Mc	Coeff.s.	Verifica
SLV 2	143750	0.38	32064	-33006	374.05	3408.21	9.11	Si

Verifica dei meccanismi locali di collasso con analisi cinematica lineare

forza di aggancio al piano = 0 quota mezzeria = 6.125 Wa = 0.05 Ta = 0.0752

Comb.	N top	N base	V orto	α0	M*	e*	a0*	aLim	Verifica
SLV 3	-28286	-46808	-18	0.043	3395.5	0.955	0.65386	11.26714	No
SLV 4	-28286	-46808	-18	0.043	3395.5	0.955	0.65386	11.26714	No
SLV 2	-23389	-41564	9	0.044	2898	0.949	0.67362	11.26714	No
SLV 1	-23389	-41564	9	0.044	2898	0.949	0.67362	11.26714	No
SLV 16	-15959	-21409	-9	0.046	2145.4	0.934	0.71128	11.26714	No
SLV 15	-15959	-21409	-9	0.046	2145.4	0.934	0.71128	11.26714	No
SLV 8	-29685	-44037	-45	0.042	3537.7	0.957	0.63771	9.97238	No
SLV 7	-29685	-44037	-45	0.042	3537.7	0.957	0.63771	9.97238	No
SLV 11	-25987	-36417	-43	0.042	3161.9	0.953	0.64701	9.97238	No
SLV 12	-25987	-36417	-43	0.042	3161.9	0.953	0.64701	9.97238	No

Tabella dei coefficienti di sicurezza minimi

Stato limite	Coeff.s.	Comb.	Verifica
PF_SLU	6.654	SLU 84	Si
V_SLU	3.141	SLU 76	Si
PF_SLV	1.87	SLV 9	Si
V_SLV	0.854	SLV 9	No
PFFP_SLV	4.011	SLV 9	Si
R_SLV	0.058	SLV 3	No

Maschio 113

Verifiche condotte secondo D.M. 17-01-18 (N.T.C.)

Dati geometrici

X ini.	Y ini.	X fin.	Y fin.	Quota i.	Quota.s	l	Sp.	h netta	h ini.	h fin.	a	a.s.,sx	a.s.,dx
-22.849	5.798	-24.643	5.798	L4	L5	1.794	0.28	3.55	3.55	3.55			

Caratteristiche del materiale

(Circolare 7 21-01-19 C8.5.I) Muratura in mattoni pieni e malta di calce LC2_Corti

fb	fk	fvk0	fmedio	τ0	fv0	μ	ϕ	fv,lim	E	G	FC
600000			345000	9000	20000	0.58	0.77	32500	320000000	128000000	1.2

Verifica a pressoflessione nel piano secondo D.M. 17-01-18 NTC §7.8.2.2.1 in combinazioni non sismiche, γM = 3

Comb.	Quota	N	M	σ0	Mu	c.s.	Verifica
SLU 83	5.25	-17515	166.29	34860	8989.43	54.06	Si
SLU 83	7.15	-18375	-2141.08	36571	9084.38	4.243	Si
SLU 80	5.25	-17348	226.85	34528	8967.22	39.529	Si
SLU 80	7.15	-18250	-2148.49	36323	9072.6	4.223	Si
SLU 82	5.25	-17004	94.05	33844	8917.72	94.814	Si
SLU 82	7.15	-17756	-2028.27	35339	9019.28	4.447	Si
SLU 79	5.25	-17425	221.24	34680	8977.56	40.578	Si
SLU 79	7.15	-18273	-2145.39	36370	9074.88	4.23	Si
SLU 75	5.25	-17088	130.63	34011	8930.29	68.365	Si
SLU 75	7.15	-17822	-2038.96	35471	9027.03	4.427	Si
SLU 84	5.25	-17438	171.9	34708	8979.39	52.237	Si
SLU 84	7.15	-18351	-2144.17	36524	9082.2	4.236	Si
SLU 74	5.25	-17165	125.02	34164	8941.5	71.523	Si
SLU 74	7.15	-17845	-2035.87	35518	9029.76	4.435	Si
SLU 77	5.25	-17599	202.86	35027	9000.12	44.367	Si
SLU 77	7.15	-18441	-2151.77	36703	9090.33	4.225	Si
SLU 76	5.25	-16863	152.75	33563	8895.82	58.237	Si
SLU 76	7.15	-17639	-2034.65	35107	9005.1	4.426	Si
SLU 78	5.25	-17522	208.47	34875	8990.36	43.126	Si
SLU 78	7.15	-18417	-2154.86	36656	9088.22	4.218	Si

Verifica a pressoflessione nel piano secondo D.M. 17-01-18 NTC §7.8.2.2.1 in combinazioni sismiche, γM = 2

Comb.	Quota	N	M	σ0	Mu	c.s.	Verifica
SLV 1	5.25	-10936	2506.99	21766	8063.98	3.217	Si
SLV 1	7.15	-14158	-3630.84	28180	9773.34	2.692	Si
SLV 10	5.25	-3140	-478.73	6250	2673.48	5.585	Si
SLV 10	7.15	-3145	790.15	6260	2677.38	3.388	Si
SLV 9	5.25	-3140	-478.73	6250	2673.48	5.585	Si
SLV 9	7.15	-3145	790.15	6260	2677.38	3.388	Si
SLV 2	5.25	-10936	2506.99	21766	8063.98	3.217	Si
SLV 2	7.15	-14158	-3630.84	28180	9773.34	2.692	Si
SLV 6	5.25	-4075	976.19	8110	3413.39	3.497	Si
SLV 6	7.15	-5802	-842.83	11548	4713.8	5.593	Si
SLV 5	5.25	-4075	976.19	8110	3413.39	3.497	Si
SLV 5	7.15	-5802	-842.83	11548	4713.8	5.593	Si
SLV 13	5.25	-7821	-2342.73	15566	6123.05	2.614	Si
SLV 13	7.15	-5302	1812.4	10552	4345.99	2.398	Si
SLV 3	5.25	-15882	2364.18	31611	10563.21	4.468	Si
SLV 3	7.15	-18664	-4387.59	37147	11654.44	2.656	Si
SLV 4	5.25	-15882	2364.18	31611	10563.21	4.468	Si
SLV 4	7.15	-18664	-4387.59	37147	11654.44	2.656	Si
SLV 14	5.25	-7821	-2342.73	15566	6123.05	2.614	Si
SLV 14	7.15	-5302	1812.4	10552	4345.99	2.398	Si

Verifica a taglio nel piano secondo D.M. 17-01-18 (N.T.C.) §7.8.2.2.2 con rottura per scorrimento in combinazioni non sismiche, γM = 3

Comb.	Quota	N	V par	M	σ0	σN	I'	fvd	Vt scorr.	Vt fess.diag.	Vt,lim	c.s.	Verifica
SLU 84	5.25	-17438	2687	171.9		34708	1.7944	10183	5116			1.9	Si
SLU 84	7.15	-18351	2685	-2144.17		36524	1.7944	10425	5238			1.95	Si
SLU 38	5.25	-14468	2434	255.29		28797	1.7944	9395	4720			1.94	Si
SLU 38	7.15	-15520	2432	-1898.6		30889	1.7944	9674	4861			2	Si
SLU 83	5.25	-17515	2656	166.29		34860	1.7944	10204	5127			1.93	Si
SLU 83	7.15	-18375	2657	-2141.08		36571	1.7944	10432	5241			1.97	Si
SLU 37	5.25	-14545	2403	249.67		28949	1.7944	9415	4731			1.97	Si
SLU 37	7.15	-15543	2404	-1895.51		30936	1.7944	9680	4864			2.02	Si
SLU 79	5.25	-17425	2682	221.24		34680	1.7944	10180	5115			1.91	Si
SLU 79	7.15	-18273	2683	-2145.39		36370	1.7944	10405	5228			1.95	Si
SLU 78	5.25	-17522	2703	208.47		34875	1.7944	10206	5128			1.9	Si
SLU 78	7.15	-18417	2702	-2154.86		36656	1.7944	10443	5247			1.94	Si
SLU 42	5.25	-14559	2408	200.33		28977	1.7944	9419	4732			1.97	Si
SLU 42	7.15	-15621	2406	-1894.28		31090	1.7944	9701	4874			2.03	Si
SLU 80	5.25	-17348	2713	226.85		34528	1.7944	10159	5104			1.88	Si
SLU 80	7.15	-18250	2711	-2148.49		36323	1.7944	10399	5225			1.93	Si
SLU 36	5.25	-14643	2424	236.9		29144	1.7944	9441	4744			1.96	Si
SLU 36	7.15	-15687	2422	-1904.98		31222	1.7944	9718	4883			2.02	Si
SLU 77	5.25	-17599	2672	202.86		35027	1.7944	10226	5138			1.92	Si
SLU 77	7.15	-18441	2673	-2151.77		36703	1.7944	10449	5250			1.96	Si

Verifica a taglio nel piano secondo D.M. 17-01-18 (N.T.C.) §7.8.2.2.2 con rottura per scorrimento in combinazioni sismiche, γM = 2

Comb.	Quota	N	V par	M	σ0	σN	I'	fvd	Vt scorr.	Vt fess.diag.	Vt,lim	c.s.	Verifica
SLV 3	5.25	-15882	5762	2364.18		31611	1.7944	14656	7363			1.28	Si
SLV 3	7.15	-18664	5420	-4387.59		37147	1.7944	15763	7920			1.46	Si
SLV 2	5.25	-10936	6032	2506.99		21766	1.7944	12687	6374			1.06	Si
SLV 2	7.15	-14158	5422	-3630.84		28180	1.7944	13969	7019			1.29	Si
SLV 6	5.25	-4075	3296	976.19		8110	1.7944	9955	5002			1.52	Si
SLV 6	7.15	-5802	2706	-842.83		11548	1.7944	10643	5347			1.98	Si
SLV 15	5.25	-12767	-2953	-2485.53		25411	1.7944	13416	6740			2.28	Si
SLV 15	7.15	-9807	-2342	1055.64		19519	1.7944	12237	6148			2.63	Si
SLV 14	5.25	-7821	-2683	-2342.73		15579	1.793	11449	5748			2.14	Si
SLV 14	7.15	-5302	-2340	1812.4		11365	1.6661	10606	4948			2.11	Si
SLV 13	5.25	-7821	-2683	-2342.73		15579	1.793	11449	5748			2.14	Si
SLV 13	7.15	-5302	-2340	1812.4		11365	1.6661	10606	4948			2.11	Si
SLV 5	5.25	-4075	3296	976.19		8110	1.7944	9955	5002			1.52	Si
SLV 5	7.15	-5802	2706	-842.83		11548	1.7944	10643	5347			1.98	Si
SLV 16	5.25	-12767	-2953	-2485.53		25411	1.7944	13416	6740			2.28	Si
SLV 16	7.15	-9807	-2342	1055.64		19519	1.7944	12237	6148			2.63	Si
SLV 4	5.25	-15882	5762	2364.18		31611	1.7944	14656	7363			1.28	Si
SLV 4	7.15	-18664	5420	-4387.59		37147	1.7944	15763	7920			1.46	Si
SLV 1	5.25	-10936	6032	2506.99		21766	1.7944	12687	6374			1.06	Si
SLV 1	7.15	-14158	5422	-3630.84		28180	1.7944	13969	7019			1.29	Si

Verifica a pressoflessione fuori piano D.M. 17-01-18 (N.T.C.)

quota 6.125 Wa 0.05 denominatore 8 γM = 2

Comb.	fd	Sa	σ0	N	M	Mc	Coeff.s.	Verifica
SLV 10	143750	0.38	7593	-3815	182.57	500.93	2.74	Si
SLV 9	143750	0.38	7593	-3815	182.57	500.93	2.74	Si
SLV 6	143750	0.38	11412	-5734	182.57	727.75	3.99	Si
SLV 5	143750	0.38	11412	-5734	182.57	727.75	3.99	Si
SLV 14	143750	0.38	13664	-6865	182.57	853.67	4.68	Si
SLV 13	143750	0.38	13664	-6865	182.57	853.67	4.68	Si
SLV 16	143750	0.38	22686	-11398	182.57	1299.49	7.12	Si
SLV 15	143750	0.38	22686	-11398	182.57	1299.49	7.12	Si
SLV 2	143750	0.38	26393	-13261	182.57	1455.48	7.97	Si
SLV 1	143750	0.38	26393	-13261	182.57	1455.48	7.97	Si

Verifica dei meccanismi locali di collasso con analisi cinematica lineare

forza di aggancio al piano = 0 quota mezzeria = 6.125 Wa = 0.05 Ta = 0.0752

Comb.	N top	N base	V orto	α0	M*	e*	a0*	aLim	Verifica
SLV 3	-14288	-17769	-23	0.042	1706.3	0.957	0.63751	11.26714	No
SLV 4	-14288	-17769	-23	0.042	1706.3	0.957	0.63751	11.26714	No
SLV 1	-11141	-13140	8	0.044	1386.7	0.948	0.67169	11.26714	No
SLV 2	-11141	-13140	8	0.044	1386.7	0.948	0.67169	11.26714	No
SLV 7	-16027	-20306	-53	0.04	1883.1	0.96	0.6055	9.97238	No
SLV 8	-16027	-20306	-53	0.04	1883.1	0.96	0.6055	9.97238	No
SLV 11	-14371	-17852	-48	0.04	1714.7	0.957	0.61341	9.97238	No
SLV 12	-14371	-17852	-48	0.04	1714.7	0.957	0.61341	9.97238	No
SLV 15	-8768	-9588	-6	0.045	1146.1	0.939	0.69562	11.26714	No
SLV 16	-8768	-9588	-6	0.045	1146.1	0.939	0.69562	11.26714	No

Tabella dei coefficienti di sicurezza minimi

Stato limite	Coeff.s.	Comb.	Verifica
PF_SLU	4.218	SLU 78	Si
V_SLU	1.881	SLU 80	Si
PF_SLV	2.398	SLV 13	Si
V_SLV	1.057	SLV 1	Si
PFFP_SLV	2.744	SLV 9	Si
R_SLV	0.057	SLV 3	No

Maschio 114

Verifiche condotte secondo D.M. 17-01-18 (N.T.C.)

Dati geometrici

X ini.	Y ini.	X fin.	Y fin.	Quota i.	Quota.s	l	Sp.	h netta	h ini.	h fin.	a	a.s.,sx	a.s.,dx
-19.687	5.798	-21.849	5.798	L4	L5	2.161	0.28	3.55	3.55	3.55			

Caratteristiche del materiale

(Circolare 7 21-01-19 C8.5.I) Muratura in mattoni pieni e malta di calce LC2_Corti

fb	fk	fvk0	fmedio	τ0	fv0	μ	ϕ	fv,lim	E	G	FC
600000			345000	9000	20000	0.58	0.77	32500	320000000	128000000	1.2

Verifica a pressoflessione nel piano secondo D.M. 17-01-18 NTC §7.8.2.2.1 in combinazioni non sismiche, γM = 3

Comb.	Quota	N	M	σ0	Mu	c.s.	Verifica
SLU 79	5.25	-24848	1672.28	41056	13318.86	7.965	Si
SLU 79	7.15	-20686	228.69	34180	12975.33	56.737	Si
SLU 77	5.25	-25123	1668.84	41511	13314.81	7.978	Si
SLU 77	7.15	-20959	235.72	34630	13021.06	55.239	Si
SLU 70	5.25	-23046	1607.85	38079	13263.32	8.249	Si
SLU 70	7.15	-18902	155.79	31233	12595.6	80.849	Si
SLU 80	5.25	-24806	1671.14	40987	13319.18	7.97	Si
SLU 80	7.15	-20641	220.04	34105	12967.39	58.932	Si
SLU 58	5.25	-22692	1558.51	37494	13235.68	8.493	Si
SLU 58	7.15	-18670	202.95	30850	12536.03	61.77	Si
SLU 69	5.25	-23087	1608.98	38148	13266.22	8.245	Si
SLU 69	7.15	-18948	164.44	31308	12607.01	76.665	Si
SLU 78	5.25	-25081	1667.71	41442	13315.64	7.984	Si
SLU 78	7.15	-20913	227.07	34555	13013.66	57.311	Si
SLU 59	5.25	-22650	1557.37	37425	13232.06	8.496	Si
SLU 59	7.15	-18625	194.3	30775	12524.06	64.459	Si
SLU 71	5.25	-22812	1612.42	37693	13245.71	8.215	Si
SLU 71	7.15	-18675	157.41	30858	12537.26	79.645	Si
SLU 72	5.25	-22770	1611.28	37624	13242.31	8.218	Si
SLU 72	7.15	-18630	148.76	30782	12525.3	84.196	Si

Verifica a pressoflessione nel piano secondo D.M. 17-01-18 NTC §7.8.2.2.1 in combinazioni sismiche, γM = 2

Comb.	Quota	N	M	σ0	Mu	c.s.	Verifica
SLV 1	5.25	-18288	3468.16	30218	14876.61	4.289	Si
SLV 1	7.15	-11220	-2841.55	18540	10286.3	3.62	Si
SLV 4	5.25	-23920	4350.11	39523	17488.97	4.02	Si
SLV 4	7.15	-15796	-3098.9	26099	13424.35	4.332	Si
SLV 9	5.25	-6006	-1337.72	9923	5963.24	4.458	Si
SLV 9	7.15	-6229	1659.02	10292	6164.71	3.716	Si
SLV 2	5.25	-18288	3468.16	30218	14876.61	4.289	Si
SLV 2	7.15	-11220	-2841.55	18540	10286.3	3.62	Si
SLV 14	5.25	-9500	-2342.51	15697	8947.77	3.82	Si
SLV 14	7.15	-11753	3620.49	19420	10682.89	2.951	Si
SLV 3	5.25	-23920	4350.11	39523	17488.97	4.02	Si
SLV 3	7.15	-15796	-3098.9	26099	13424.35	4.332	Si
SLV 16	5.25	-15131	-1460.56	25002	13006.78	8.905	Si
SLV 16	7.15	-16328	3363.14	26979	13749.75	4.088	Si
SLV 13	5.25	-9500	-2342.51	15697	8947.77	3.82	Si
SLV 13	7.15	-11753	3620.49	19420	10682.89	2.951	Si
SLV 15	5.25	-15131	-1460.56	25002	13006.78	8.905	Si
SLV 15	7.15	-16328	3363.14	26979	13749.75	4.088	Si
SLV 10	5.25	-6006	-1337.72	9923	5963.24	4.458	Si
SLV 10	7.15	-6229	1659.02	10292	6164.71	3.716	Si

Verifica a taglio nel piano secondo D.M. 17-01-18 (N.T.C.) §7.8.2.2.2 con rottura per scorrimento in combinazioni non sismiche, γM = 3

Comb.	Quota	N	V par	M	σ0	σN	l'	fvd	Vt scorr.	Vt fess.diag.	Vt,lim	c.s.	Verifica
SLU 80	5.25	-24806	1652	1671.14		40987	2.1615	10833	6556			3.97	Si
SLU 80	7.15	-20641	1618	220.04		34105	2.1615	10103	6114			3.78	Si
SLU 71	5.25	-22812	1644	1612.42		37693	2.1615	10581	6404			3.9	Si
SLU 71	7.15	-18675	1610	157.41		30858	2.1615	9670	5852			3.63	Si
SLU 79	5.25	-24848	1647	1672.28		41056	2.1615	10833	6556			3.98	Si
SLU 79	7.15	-20686	1611	228.69		34180	2.1615	10113	6120			3.8	Si
SLU 50	5.25	-20656	1536	1498.65		34131	2.1615	10106	6116			3.98	Si
SLU 50	7.15	-16660	1506	131.67		27527	2.1615	9226	5584			3.71	Si
SLU 72	5.25	-22770	1649	1611.28		37624	2.1615	10572	6398			3.88	Si
SLU 72	7.15	-18630	1618	148.76		30782	2.1615	9660	5846			3.61	Si
SLU 49	5.25	-20890	1538	1494.08		34516	2.1615	10158	6148			4	Si
SLU 49	7.15	-16887	1510	130.05		27902	2.1615	9276	5614			3.72	Si
SLU 69	5.25	-23087	1640	1608.98		38148	2.1615	10642	6441			3.93	Si
SLU 69	7.15	-18948	1606	164.44		31308	2.1615	9730	5889			3.67	Si
SLU 48	5.25	-20931	1533	1495.21		34586	2.1615	10167	6153			4.01	Si
SLU 48	7.15	-16932	1502	138.7		27978	2.1615	9286	5620			3.74	Si
SLU 51	5.25	-20614	1542	1497.52		34062	2.1615	10097	6111			3.96	Si
SLU 51	7.15	-16614	1514	123.02		27452	2.1615	9216	5577			3.68	Si
SLU 70	5.25	-23046	1645	1607.85		38079	2.1615	10633	6435			3.91	Si
SLU 70	7.15	-18902	1614	155.79		31233	2.1615	9720	5883			3.64	Si

Verifica a taglio nel piano secondo D.M. 17-01-18 (N.T.C.) §7.8.2.2.2 con rottura per scorrimento in combinazioni sismiche, γM = 2

Comb.	Quota	N	V par	M	σ0	σN	l'	fvd	Vt scorr.	Vt fess.diag.	Vt,lim	c.s.	Verifica
SLV 2	5.25	-18288	5950	3468.16		30218	2.1615	14377	8701			1.46	Si
SLV 2	7.15	-11220	5292	-2841.55		18540	2.1615	12041	7287			1.38	Si
SLV 14	5.25	-9500	-6686	-2342.51		15697	2.1615	11473	6943			1.04	Si
SLV 14	7.15	-11753	-5816	3620.49		19420	2.1615	12217	7394			1.27	Si
SLV 9	5.25	-6006	-5284	-1337.72		9923	2.1615	10318	6244			1.18	Si
SLV 9	7.15	-6229	-4640	1659.02		10292	2.1615	10392	6289			1.36	Si
SLV 13	5.25	-9500	-6686	-2342.51		15697	2.1615	11473	6943			1.04	Si
SLV 13	7.15	-11753	-5816	3620.49		19420	2.1615	12217	7394			1.27	Si
SLV 1	5.25	-18288	5950	3468.16		30218	2.1615	14377	8701			1.46	Si
SLV 1	7.15	-11220	5292	-2841.55		18540	2.1615	12041	7287			1.38	Si

Comb.	Quota	N	V par	M	σ0	σN	l'	fvd	Vt scorr.	Vt fess.diag.	Vt,lim	c.s.	Verifica
SLV 8	5.25	-27414	7137	3345.32		45297	2.1615	16250	9835			1.38	Si
SLV 8	7.15	-21319	6441	-1137.43		35227	2.1615	15379	9307			1.45	Si
SLV 7	5.25	-27414	7137	3345.32		45297	2.1615	16250	9835			1.38	Si
SLV 7	7.15	-21319	6441	-1137.43		35227	2.1615	15379	9307			1.45	Si
SLV 4	5.25	-23920	8539	4350.11		39523	2.1615	16238	9827			1.15	Si
SLV 4	7.15	-15796	7616	-3098.9		26099	2.1615	13553	8202			1.08	Si
SLV 10	5.25	-6006	-5284	-1337.72		9923	2.1615	10318	6244			1.18	Si
SLV 10	7.15	-6229	-4640	1659.02		10292	2.1615	10392	6289			1.36	Si
SLV 3	5.25	-23920	8539	4350.11		39523	2.1615	16238	9827			1.15	Si
SLV 3	7.15	-15796	7616	-3098.9		26099	2.1615	13553	8202			1.08	Si

Verifica a pressoflessione fuori piano D.M. 17-01-18 (N.T.C.)

quota 6.125 Wa 0.05 denominatore 8 γM = 2

Comb.	fd	Sa	σ0	N	M	Mc	Coeff.s.	Verifica
SLV 9	143750	0.38	11508	-6965	219.92	883.25	4.02	Si
SLV 10	143750	0.38	11508	-6965	219.92	883.25	4.02	Si
SLV 6	143750	0.38	13134	-7949	219.92	993.24	4.52	Si
SLV 5	143750	0.38	13134	-7949	219.92	993.24	4.52	Si
SLV 14	143750	0.38	18756	-11351	219.92	1345.21	6.12	Si
SLV 13	143750	0.38	18756	-11351	219.92	1345.21	6.12	Si
SLV 2	143750	0.38	24176	-14631	219.92	1643.09	7.47	Si
SLV 1	143750	0.38	24176	-14631	219.92	1643.09	7.47	Si
SLV 16	143750	0.38	26593	-16095	219.92	1762.83	8.02	Si
SLV 15	143750	0.38	26593	-16095	219.92	1762.83	8.02	Si

Verifica dei meccanismi locali di collasso con analisi cinematica lineare

forza di aggancio al piano = 0 quota mezzeria = 6.125 Wa = 0.05 Ta = 0.0752

Comb.	N top	N base	V orto	α0	M*	e*	a0*	aLim	Verifica
SLV 6	-5548	-8582	153	0.029	875.8	0.913	0.46498	9.97238	No
SLV 5	-5548	-8582	153	0.029	875.8	0.913	0.46498	9.97238	No
SLV 2	-10500	-15796	105	0.037	1374.3	0.938	0.57553	11.26714	No
SLV 1	-10500	-15796	105	0.037	1374.3	0.938	0.57553	11.26714	No
SLV 16	-13260	-16709	-105	0.038	1654.1	0.947	0.57617	11.26714	No
SLV 15	-13260	-16709	-105	0.038	1654.1	0.947	0.57617	11.26714	No
SLV 11	-18212	-23923	-153	0.036	2157.1	0.958	0.54017	9.97238	No
SLV 12	-18212	-23923	-153	0.036	2157.1	0.958	0.54017	9.97238	No
SLV 10	-5206	-7366	114	0.034	841.7	0.91	0.54505	9.97238	No
SLV 9	-5206	-7366	114	0.034	841.7	0.91	0.54505	9.97238	No

Tabella dei coefficienti di sicurezza minimi

Stato limite	Coeff.s.	Comb.	Verifica
PF_SLU	7.965	SLU 79	Si
V_SLU	3.613	SLU 72	Si
PF_SLV	2.951	SLV 13	Si
V_SLV	1.039	SLV 13	Si
PFFP_SLV	4.016	SLV 9	Si
R_SLV	0.047	SLV 5	No

Maschio 115

Verifiche condotte secondo D.M. 17-01-18 (N.T.C.)

Dati geometrici

X ini.	Y ini.	X fin.	Y fin.	Quota i.	Quota.s	l	Sp.	h netta	h ini.	h fin.	a	a.s.,sx	a.s.,dx
-22.608	-3.254	-24.643	-3.254	L4	L5	2.035	0.28	3.55	3.55	3.55			

Caratteristiche del materiale

(Circolare 7 21-01-19 C8.5.I) Muratura in mattoni pieni e malta di calce LC2_Corti

fb	fk	fvk0	fmedio	τ0	fv0	μ	ϕ	fv,lim	E	G	FC
600000			345000	9000	20000	0.58	0.77	32500	320000000	128000000	1.2

Verifica a pressoflessione nel piano secondo D.M. 17-01-18 NTC §7.8.2.2.1 in combinazioni non sismiche, γM = 3

Comb.	Quota	N	M	σ0	Mu	c.s.	Verifica
SLU 76	5.25	-18282	809.77	32087	11273.58	13.922	Si
SLU 76	7.15	-18732	-2308.32	32878	11366.38	4.924	Si
SLU 79	5.25	-17429	1366.74	30590	11073.47	8.102	Si
SLU 79	7.15	-18534	-2312.35	32530	11326.69	4.898	Si
SLU 83	5.25	-17649	1394.88	30976	11128.07	7.978	Si
SLU 83	7.15	-18832	-2355.17	33053	11385.76	4.834	Si
SLU 78	5.25	-18343	1059.46	32195	11286.79	10.653	Si
SLU 78	7.15	-19137	-2372.38	33589	11442.23	4.823	Si
SLU 84	5.25	-18361	1087.57	32226	11290.49	10.381	Si
SLU 84	7.15	-19226	-2400.91	33744	11457.87	4.772	Si
SLU 75	5.25	-18009	1014.69	31609	11213.14	11.051	Si
SLU 75	7.15	-18679	-2292.13	32784	11355.86	4.954	Si
SLU 81	5.25	-17315	1350.11	30389	11044.24	8.18	Si
SLU 81	7.15	-18374	-2274.93	32249	11293.25	4.964	Si
SLU 82	5.25	-18027	1042.79	31639	11217.09	10.757	Si
SLU 82	7.15	-18768	-2320.66	32940	11373.29	4.901	Si
SLU 80	5.25	-18141	1059.42	31840	11242.75	10.612	Si
SLU 80	7.15	-18928	-2358.08	33222	11403.95	4.836	Si
SLU 77	5.25	-17631	1366.78	30945	11123.83	8.139	Si
SLU 77	7.15	-18744	-2326.65	32897	11368.58	4.886	Si

Verifica a pressoflessione nel piano secondo D.M. 17-01-18 NTC §7.8.2.2.1 in combinazioni sismiche, γM = 2

Comb.	Quota	N	M	σ0	Mu	c.s.	Verifica
SLV 8	5.25	-4708	2352.19	8263	4466.24	1.899	Si
SLV 8	7.15	-8355	-1667.42	14665	7480.78	4.486	Si
SLV 14	5.25	-10665	-3478.47	18719	9188.86	2.642	Si
SLV 14	7.15	-5977	1947.69	10490	5558.82	2.854	Si
SLV 15	5.25	-5617	-3356.31	9858	5253.49	1.565	Si
SLV 15	7.15	-2113	2482.41	0	0	0	No, e>l/2
SLV 13	5.25	-10665	-3478.47	18719	9188.86	2.642	Si
SLV 13	7.15	-5977	1947.69	10490	5558.82	2.854	Si
SLV 3	5.25	-13281	5206.72	23310	10934.55	2.1	Si
SLV 3	7.15	-18651	-4861.71	32736	13892.36	2.858	Si
SLV 7	5.25	-4708	2352.19	8263	4466.24	1.899	Si
SLV 7	7.15	-8355	-1667.42	14665	7480.78	4.486	Si
SLV 16	5.25	-5617	-3356.31	9858	5253.49	1.565	Si
SLV 16	7.15	-2113	2482.41	0	0	0	No, e>l/2
SLV 1	5.25	-18330	5084.55	32171	13738.9	2.702	Si
SLV 1	7.15	-22515	-5396.43	39517	15498.83	2.872	Si
SLV 4	5.25	-13281	5206.72	23310	10934.55	2.1	Si
SLV 4	7.15	-18651	-4861.71	32736	13892.36	2.858	Si
SLV 2	5.25	-18330	5084.55	32171	13738.9	2.702	Si
SLV 2	7.15	-22515	-5396.43	39517	15498.83	2.872	Si

Verifica a taglio nel piano secondo D.M. 17-01-18 (N.T.C.) §7.8.2.2.2 con rottura per scorrimento in combinazioni non sismiche, γM = 3

Comb.	Quota	N	V par	M	σ0	σN	l'	fvd	Vt scorr.	Vt fess.diag.	Vt,lim	c.s.	Verifica
SLU 81	5.25	-17315	3876	1350.11		30389	2.0348	9607	5474			1.41	Si
SLU 81	7.15	-18374	3876	-2274.93		32249	2.0348	9855	5615			1.45	Si
SLU 39	5.25	-14408	3373	1175.8		25289	2.0348	8927	5086			1.51	Si
SLU 39	7.15	-15581	3373	-1978.3		27347	2.0348	9202	5243			1.55	Si
SLU 37	5.25	-14523	3426	1192.43		25489	2.0348	8954	5102			1.49	Si
SLU 37	7.15	-15742	3427	-2015.73		27629	2.0348	9239	5264			1.54	Si
SLU 41	5.25	-14743	3506	1220.58		25875	2.0348	9006	5131			1.46	Si
SLU 41	7.15	-16039	3506	-2058.55		28151	2.0348	9309	5304			1.51	Si
SLU 62	5.25	-16307	3545	1230.75		28620	2.0348	9372	5340			1.51	Si
SLU 62	7.15	-17082	3545	-2084.82		29981	2.0348	9553	5443			1.54	Si
SLU 77	5.25	-17631	3940	1366.78		30945	2.0348	9682	5516			1.4	Si
SLU 77	7.15	-18744	3940	-2326.65		32897	2.0348	9942	5664			1.44	Si
SLU 83	5.25	-17649	4008	1394.88		30976	2.0348	9686	5518			1.38	Si
SLU 83	7.15	-18832	4008	-2355.17		33053	2.0348	9963	5676			1.42	Si
SLU 35	5.25	-14725	3438	1192.47		25845	2.0348	9001	5129			1.49	Si
SLU 35	7.15	-15951	3438	-2030.02		27996	2.0348	9288	5292			1.54	Si
SLU 74	5.25	-17297	3808	1322.01		30359	2.0348	9603	5472			1.44	Si
SLU 74	7.15	-18285	3808	-2246.4		32093	2.0348	9835	5603			1.47	Si
SLU 79	5.25	-17429	3929	1366.74		30590	2.0348	9634	5489			1.4	Si
SLU 79	7.15	-18534	3929	-2312.35		32530	2.0348	9893	5637			1.43	Si

Verifica a taglio nel piano secondo D.M. 17-01-18 (N.T.C.) §7.8.2.2.2 con rottura per scorrimento in combinazioni sismiche, γM = 2

Comb.	Quota	N	V par	M	σ0	σN	l'	fvd	Vt scorr.	Vt fess.diag.	Vt,lim	c.s.	Verifica
SLV 3	5.25	-13281	9978	5206.72		25282	1.8761	13390	7034			0.7	No, Vu<V
SLV 3	7.15	-18651	9537	-4861.71		32736	2.0348	14880	8478			0.89	No, Vu<V
SLV 2	5.25	-18330	8224	5084.55		32171	2.0348	14768	8414			1.02	Si
SLV 2	7.15	-22515	8150	-5396.43		39517	2.0348	16237	9251			1.14	Si
SLV 1	5.25	-18330	8224	5084.55		32171	2.0348	14768	8414			1.02	Si
SLV 1	7.15	-22515	8150	-5396.43		39517	2.0348	16237	9251			1.14	Si
SLV 4	5.25	-13281	9978	5206.72		25282	1.8761	13390	7034			0.7	No, Vu<V
SLV 4	7.15	-18651	9537	-4861.71		32736	2.0348	14880	8478			0.89	No, Vu<V
SLV 16	5.25	-5617	-3268	-3356.31		15925	1.2596	11518	4062			1.24	Si
SLV 16	7.15	-2113	-3193	2482.41		0	0	8333	0			0	No, Vu<V
SLV 15	5.25	-5617	-3268	-3356.31		15925	1.2596	11518	4062			1.24	Si
SLV 15	7.15	-2113	-3193	2482.41		0	0	8333	0			0	No, Vu<V
SLV 8	5.25	-4708	7389	2352.19		10824	1.5535	10498	4566			0.62	No, Vu<V
SLV 8	7.15	-8355	6700	-1667.42		14665	2.0348	11266	6419			0.96	No, Vu<V
SLV 7	5.25	-4708	7389	2352.19		10824	1.5535	10498	4566			0.62	No, Vu<V
SLV 7	7.15	-8355	6700	-1667.42		14665	2.0348	11266	6419			0.96	No, Vu<V
SLV 13	5.25	-10665	-5022	-3478.47		18719	2.0348	12077	6881			1.37	Si
SLV 13	7.15	-5977	-4580	1947.69		10490	2.0348	10431	5943			1.3	Si
SLV 14	5.25	-10665	-5022	-3478.47		18719	2.0348	12077	6881			1.37	Si
SLV 14	7.15	-5977	-4580	1947.69		10490	2.0348	10431	5943			1.3	Si

Verifica a pressoflessione fuori piano D.M. 17-01-18 (N.T.C.)

quota 6.125 Wa 0.05 denominatore 8 γM = 2

Comb.	fd	Sa	σ0	N	M	Mc	Coeff.s.	Verifica
SLV 15	143750	0.38	7475	-4259	207.04	559.78	2.7	Si
SLV 16	143750	0.38	7475	-4259	207.04	559.78	2.7	Si
SLV 12	143750	0.38	7872	-4485	207.04	587.48	2.84	Si
SLV 11	143750	0.38	7872	-4485	207.04	587.48	2.84	Si
SLV 14	143750	0.38	13934	-7939	207.04	984.72	4.76	Si
SLV 13	143750	0.38	13934	-7939	207.04	984.72	4.76	Si
SLV 7	143750	0.38	14672	-8359	207.04	1029.78	4.97	Si
SLV 8	143750	0.38	14672	-8359	207.04	1029.78	4.97	Si
SLV 10	143750	0.38	29403	-16752	207.04	1780.96	8.6	Si
SLV 9	143750	0.38	29403	-16752	207.04	1780.96	8.6	Si

Verifica dei meccanismi locali di collasso con analisi cinematica lineare

forza di aggancio al piano = 0 quota mezzeria = 6.125 Wa = 0.05 Ta = 0.0752

Comb.	N top	N base	V orto	α0	M*	e*	a0*	aLim	Verifica
SLV 16	-3464	-2571	-138	0.027	650.7	0.899	0.43426	11.26714	No
SLV 15	-3464	-2571	-138	0.027	650.7	0.899	0.43426	11.26714	No
SLV 1	-15928	-21431	138	0.036	1907	0.956	0.54254	11.26714	No
SLV 2	-15928	-21431	138	0.036	1907	0.956	0.54254	11.26714	No

Comb.	N top	N base	V orto	α0	M*	e*	a0*	aLim	Verifica
SLV 12	-3603	-1005	-117	0.031	664.3	0.9	0.50262	9.97238	No
SLV 11	-3603	-1005	-117	0.031	664.3	0.9	0.50262	9.97238	No
SLV 4	-13143	-16046	89	0.038	1624.1	0.949	0.58659	11.26714	No
SLV 3	-13143	-16046	89	0.038	1624.1	0.949	0.58659	11.26714	No
SLV 13	-6248	-7956	-89	0.037	927.1	0.92	0.59035	11.26714	No
SLV 14	-6248	-7956	-89	0.037	927.1	0.92	0.59035	11.26714	No

Tabella dei coefficienti di sicurezza minimi

Stato limite	Coeff.s.	Comb.	Verifica
PF_SLU	4.772	SLU 84	Si
V_SLU	1.377	SLU 83	Si
PF_SLV	0	SLV 15	No
V_SLV	0	SLV 15	No
PFFP_SLV	2.704	SLV 15	Si
R_SLV	0.039	SLV 15	No

Maschio 116

Verifiche condotte secondo D.M. 17-01-18 (N.T.C.)

Dati geometrici

X ini.	Y ini.	X fin.	Y fin.	Quota i.	Quota.s	l	Sp.	h netta	h ini.	h fin.	a	a.s.,sx	a.s.,dx
-19.303	-3.254	-21.608	-3.254	L4	L5	2.305	0.28	3.55	3.55	3.55			

Caratteristiche del materiale

(Circolare 7 21-01-19 C8.5.I) Muratura in mattoni pieni e malta di calce LC2_Corti

fb	fk	fvk0	fmedio	τ0	fv0	μ	ϕ	fv,lim	E	G	FC
600000			345000	9000	20000	0.58	0.77	32500	320000000	128000000	1.2

Verifica a pressoflessione nel piano secondo D.M. 17-01-18 NTC §7.8.2.2.1 in combinazioni non sismiche, γM = 3

Comb.	Quota	N	M	σ0	Mu	c.s.	Verifica
SLU 77	6.35	-20838	-1933.57	32286	14496.87	7.497	Si
SLU 77	7.15	-19489	-985.59	30197	14134.8	14.342	Si
SLU 60	6.35	-18696	-1818.29	28967	13884.5	7.636	Si
SLU 60	7.15	-17360	-792.91	26899	13401.03	16.901	Si
SLU 53	6.35	-18586	-1769.33	28798	13847.87	7.827	Si
SLU 53	7.15	-17251	-836.7	26729	13358.01	15.965	Si
SLU 83	6.35	-20947	-1982.54	32456	14522.71	7.325	Si
SLU 83	7.15	-19598	-941.79	30366	14167.1	15.043	Si
SLU 81	6.35	-20521	-1977.08	31795	14418.9	7.293	Si
SLU 81	7.15	-19172	-872.93	29705	14038.08	16.082	Si
SLU 56	6.35	-19013	-1774.78	29459	13987.83	7.881	Si
SLU 56	7.15	-17677	-905.56	27390	13522.93	14.933	Si
SLU 64	6.35	-17845	-1718.99	27649	13585.51	7.903	Si
SLU 64	7.15	-16496	-780.89	25560	13046.47	16.707	Si
SLU 62	6.35	-19122	-1823.74	29628	14022.42	7.689	Si
SLU 62	7.15	-17787	-861.77	27559	13563.91	15.74	Si
SLU 74	6.35	-20411	-1928.12	31626	14391.02	7.464	Si
SLU 74	7.15	-19063	-916.72	29536	14003.74	15.276	Si
SLU 79	6.35	-20571	-1910.57	31873	14431.49	7.554	Si
SLU 79	7.15	-19222	-983.04	29783	14053.63	14.296	Si

Verifica a pressoflessione nel piano secondo D.M. 17-01-18 NTC §7.8.2.2.1 in combinazioni sismiche, γM = 2

Comb.	Quota	N	M	σ0	Mu	c.s.	Verifica
SLV 3	6.35	-11408	330.04	17676	11246.01	34.075	Si
SLV 3	7.15	-10541	-6302.91	16332	10524.61	1.67	Si
SLV 11	6.35	-6747	-2915.32	10455	7111.05	2.439	Si
SLV 11	7.15	-5607	1714.84	8688	6002.64	3.5	Si
SLV 12	6.35	-6747	-2915.32	10455	7111.05	2.439	Si
SLV 12	7.15	-5607	1714.84	8688	6002.64	3.5	Si
SLV 13	6.35	-16313	-3008.08	25276	14911.96	4.957	Si
SLV 13	7.15	-15112	5099.9	23415	14078.97	2.761	Si
SLV 1	6.35	-15729	922.1	24371	14512.04	15.738	Si
SLV 1	7.15	-14892	-6636.45	23074	13922.21	2.098	Si
SLV 14	6.35	-16313	-3008.08	25276	14911.96	4.957	Si
SLV 14	7.15	-15112	5099.9	23415	14078.97	2.761	Si
SLV 15	6.35	-11993	-3600.14	18582	11719.75	3.255	Si
SLV 15	7.15	-10760	5433.44	16673	10709.29	1.971	Si
SLV 2	6.35	-15729	922.1	24371	14512.04	15.738	Si
SLV 2	7.15	-14892	-6636.45	23074	13922.21	2.098	Si
SLV 4	6.35	-11408	330.04	17676	11246.01	34.075	Si
SLV 4	7.15	-10541	-6302.91	16332	10524.61	1.67	Si
SLV 16	6.35	-11993	-3600.14	18582	11719.75	3.255	Si
SLV 16	7.15	-10760	5433.44	16673	10709.29	1.971	Si

Verifica a taglio nel piano secondo D.M. 17-01-18 (N.T.C.) §7.8.2.2.2 con rottura per scorrimento in combinazioni non sismiche, γM = 3

Comb.	Quota	N	V par	M	σ0	σN	l'	fvd	Vt scorr.	Vt fess.diag.	Vt,lim	c.s.	Verifica
SLU 77	6.35	-20838	-1068	-1933.57		32286	2.305	9860	6364			5.96	Si
SLU 77	7.15	-19489	-1068	-985.59		30197	2.305	9582	6184			5.79	Si
SLU 81	6.35	-20521	-1263	-1977.08		31795	2.305	9795	6322			5.01	Si
SLU 81	7.15	-19172	-1263	-872.93		29705	2.305	9516	6142			4.86	Si
SLU 53	6.35	-18586	-1047	-1769.33		28798	2.305	9395	6064			5.79	Si
SLU 53	7.15	-17251	-1047	-836.7		26729	2.305	9119	5886			5.62	Si
SLU 64	6.35	-17845	-1055	-1718.99		27649	2.305	9242	5965			5.65	Si
SLU 64	7.15	-16496	-1055	-780.89		25560	2.305	8964	5785			5.48	Si
SLU 74	6.35	-20411	-1147	-1928.12		31626	2.305	9772	6307			5.5	Si
SLU 74	7.15	-19063	-1147	-916.72		29536	2.305	9494	6127			5.34	Si

Comb.	Quota	N	V par	M	σ0	σN	l'	fvd	Vt scorr.	Vt fess.diag.	Vt,lim	c.s.	Verifica
SLU 83	6.35	-20947	-1184	-1982.54		32456	2.305	9883	6378			5.39	Si
SLU 83	7.15	-19598	-1184	-941.79		30366	2.305	9604	6199			5.24	Si
SLU 18	6.35	-15480	-969	-1500.12		23985	2.305	8754	5650			5.83	Si
SLU 18	7.15	-14449	-969	-652.27		22388	2.305	8541	5512			5.69	Si
SLU 62	6.35	-19122	-1084	-1823.74		29628	2.305	9506	6135			5.66	Si
SLU 62	7.15	-17787	-1084	-861.77		27559	2.305	9230	5957			5.5	Si
SLU 39	6.35	-17305	-1069	-1658.91		26813	2.305	9131	5893			5.51	Si
SLU 39	7.15	-16261	-1069	-732.29		25195	2.305	8915	5754			5.38	Si
SLU 60	6.35	-18696	-1163	-1818.29		28967	2.305	9418	6078			5.23	Si
SLU 60	7.15	-17360	-1163	-792.91		26899	2.305	9142	5900			5.07	Si

Verifica a taglio nel piano secondo D.M. 17-01-18 (N.T.C.) §7.8.2.2.2 con rottura per scorrimento in combinazioni sismiche, γM = 2

Comb.	Quota	N	V par	M	σ0	σN	l'	fvd	Vt scorr.	Vt fess.diag.	Vt,lim	c.s.	Verifica
SLV 13	6.35	-16313	-10184	-3008.08		25276	2.305	13389	8641			0.85	No, Vu<V
SLV 13	7.15	-15112	-10003	5099.9		23415	2.305	13016	8401			0.84	No, Vu<V
SLV 12	6.35	-6747	-6607	-2915.32		11150	2.1613	10563	6393			0.97	No, Vu<V
SLV 12	7.15	-5607	-6958	1714.84		8688	2.305	10071	6500			0.93	No, Vu<V
SLV 2	6.35	-15729	10156	922.1		24371	2.305	13207	8524			0.84	No, Vu<V
SLV 2	7.15	-14892	10198	-6636.45		25081	2.1206	13349	7927			0.78	No, Vu<V
SLV 15	6.35	-11993	-11819	-3600.14		18582	2.305	12050	7777			0.66	No, Vu<V
SLV 15	7.15	-10760	-11861	5433.44		19782	1.9427	12290	6685			0.56	No, Vu<V
SLV 4	6.35	-11408	8521	330.04		17676	2.305	11869	7660			0.9	No, Vu<V
SLV 4	7.15	-10541	8340	-6302.91		22628	1.6637	12859	5990			0.72	No, Vu<V
SLV 16	6.35	-11993	-11819	-3600.14		18582	2.305	12050	7777			0.66	No, Vu<V
SLV 16	7.15	-10760	-11861	5433.44		19782	1.9427	12290	6685			0.56	No, Vu<V
SLV 14	6.35	-16313	-10184	-3008.08		25276	2.305	13389	8641			0.85	No, Vu<V
SLV 14	7.15	-15112	-10003	5099.9		23415	2.305	13016	8401			0.84	No, Vu<V
SLV 11	6.35	-6747	-6607	-2915.32		11150	2.1613	10563	6393			0.97	No, Vu<V
SLV 11	7.15	-5607	-6958	1714.84		8688	2.305	10071	6500			0.93	No, Vu<V
SLV 3	6.35	-11408	8521	330.04		17676	2.305	11869	7660			0.9	No, Vu<V
SLV 3	7.15	-10541	8340	-6302.91		22628	1.6637	12859	5990			0.72	No, Vu<V
SLV 1	6.35	-15729	10156	922.1		24371	2.305	13207	8524			0.84	No, Vu<V
SLV 1	7.15	-14892	10198	-6636.45		25081	2.1206	13349	7927			0.78	No, Vu<V

Verifica a pressoflessione fuori piano D.M. 17-01-18 (N.T.C.)

quota 6.125 Wa 0.05 denominatore 8 γM = 2

Comb.	fd	Sa	σ0	N	M	Mc	Coeff.s.	Verifica
SLV 11	143750	0.38	7889	-5092	234.52	666.8	2.84	Si
SLV 12	143750	0.38	7889	-5092	234.52	666.8	2.84	Si
SLV 7	143750	0.38	9509	-6137	234.52	792.33	3.38	Si
SLV 8	143750	0.38	9509	-6137	234.52	792.33	3.38	Si
SLV 16	143750	0.38	13799	-8906	234.52	1106.04	4.72	Si
SLV 15	143750	0.38	13799	-8906	234.52	1106.04	4.72	Si
SLV 4	143750	0.38	19199	-12391	234.52	1462.17	6.23	Si
SLV 3	143750	0.38	19199	-12391	234.52	1462.17	6.23	Si
SLV 13	143750	0.38	20485	-13221	234.52	1540.64	6.57	Si
SLV 14	143750	0.38	20485	-13221	234.52	1540.64	6.57	Si

Verifica dei meccanismi locali di collasso con analisi cinematica lineare

forza di aggancio al piano = 0 quota mezzeria = 6.125 Wa = 0.05 Ta = 0.0752

Comb.	N top	N base	V orto	α0	M*	e*	a0*	aLim	Verifica
SLV 12	-4454	-2371	-188	0.023	789	0.902	0.37086	9.97238	No
SLV 11	-4454	-2371	-188	0.023	789	0.902	0.37086	9.97238	No
SLV 16	-7518	-6411	-166	0.031	1094.4	0.922	0.48176	11.26714	No
SLV 15	-7518	-6411	-166	0.031	1094.4	0.922	0.48176	11.26714	No
SLV 1	-12203	-16469	168	0.033	1567.4	0.942	0.51521	11.26714	No
SLV 2	-12203	-16469	168	0.033	1567.4	0.942	0.51521	11.26714	No
SLV 6	-15267	-20509	190	0.033	1878.3	0.95	0.50764	9.97238	No
SLV 5	-15267	-20509	190	0.033	1878.3	0.95	0.50764	9.97238	No
SLV 14	-10620	-11395	-75	0.04	1407.2	0.936	0.62018	11.26714	No
SLV 13	-10620	-11395	-75	0.04	1407.2	0.936	0.62018	11.26714	No

Tabella dei coefficienti di sicurezza minimi

Stato limite	Coeff.s.	Comb.	Verifica
PF_SLU	7.293	SLU 81	Si
V_SLU	4.863	SLU 81	Si
PF_SLV	1.67	SLV 3	Si
V_SLV	0.564	SLV 15	No
PFFP_SLV	2.843	SLV 11	Si
R_SLV	0.037	SLV 11	No

Maschio 117

Verifiche condotte secondo D.M. 17-01-18 (N.T.C.)

Dati geometrici

X ini.	Y ini.	X fin.	Y fin.	Quota i.	Quota.s	l	Sp.	h netta	h ini.	h fin.	a	a.s.,sx	a.s.,dx
-18.275	-3.254	-18.803	-3.254	L4	L5	0.529	0.28	3.55	3.55	3.55			

Caratteristiche del materiale

(Circolare 7 21-01-19 C8.5.I) Muratura in mattoni pieni e malta di calce LC2_Corti

fb	fk	fvk0	fmedio	τ0	fv0	μ	ϕ	fv,lim	E	G	FC
600000			345000	9000	20000	0.58	0.77	32500	320000000	128000000	1.2

Verifica a pressoflessione nel piano secondo D.M. 17-01-18 NTC §7.8.2.2.1 in combinazioni non sismiche, γM = 3

Comb.	Quota	N	M	σ0	Mu	c.s.	Verifica
SLU 79	6.35	-6360	43	42958	794.64	18.48	Si
SLU 79	7.15	-6490	151.02	43837	792.39	5.247	Si
SLU 64	6.35	-5506	29.16	37191	791.02	27.124	Si
SLU 64	7.15	-5558	155.43	37545	792.16	5.096	Si
SLU 74	6.35	-6285	33.15	42452	795.6	23.999	Si
SLU 74	7.15	-6416	167.37	43338	793.76	4.743	Si
SLU 66	6.35	-5718	36.46	38621	794.89	21.801	Si
SLU 66	7.15	-5777	153.42	39024	795.63	5.186	Si
SLU 77	6.35	-6428	41.73	43420	793.55	19.018	Si
SLU 77	7.15	-6562	158.19	44328	790.81	4.999	Si
SLU 39	6.35	-5312	17.45	35884	785.75	45.031	Si
SLU 39	7.15	-5480	148.3	37015	790.4	5.33	Si
SLU 53	6.35	-5745	33.67	38806	795.25	23.622	Si
SLU 53	7.15	-5826	149.57	39350	796.12	5.323	Si
SLU 83	6.35	-6459	33.01	43632	792.98	24.024	Si
SLU 83	7.15	-6617	166.18	44696	789.47	4.751	Si
SLU 81	6.35	-6316	24.43	42664	795.23	32.547	Si
SLU 81	7.15	-6471	175.37	43707	792.77	4.521	Si
SLU 60	6.35	-5776	24.95	39018	795.62	31.892	Si
SLU 60	7.15	-5880	157.57	39719	796.54	5.055	Si

Verifica a pressoflessione nel piano secondo D.M. 17-01-18 NTC §7.8.2.2.1 in combinazioni sismiche, γM = 2

Comb.	Quota	N	M	σ0	Mu	c.s.	Verifica
SLV 11	6.35	-2051	-628.23	0	0	0	No, e>l/2
SLV 11	7.15	-3490	462.83	23577	744.7	1.609	Si
SLV 15	6.35	-1253	-914.1	0	0	0	No, e>l/2
SLV 15	7.15	-1775	1610.25	0	0	0	No, e>l/2
SLV 2	6.35	-7304	957.3	49338	1151.28	1.203	Si
SLV 2	7.15	-6881	-1370.97	46480	1127.14	0.822	No, M>Mu
SLV 1	6.35	-7304	957.3	49338	1151.28	1.203	Si
SLV 1	7.15	-6881	-1370.97	46480	1127.14	0.822	No, M>Mu
SLV 4	6.35	-6434	713.93	43458	1095.92	1.535	Si
SLV 4	7.15	-6834	-1439.54	46159	1124.11	0.781	No, M>Mu
SLV 16	6.35	-1253	-914.1	0	0	0	No, e>l/2
SLV 16	7.15	-1775	1610.25	0	0	0	No, e>l/2
SLV 14	6.35	-2124	-670.73	0	0	0	No, e>l/2
SLV 14	7.15	-1823	1678.82	0	0	0	No, e>l/2
SLV 12	6.35	-2051	-628.23	0	0	0	No, e>l/2
SLV 12	7.15	-3490	462.83	23577	744.7	1.609	Si
SLV 13	6.35	-2124	-670.73	0	0	0	No, e>l/2
SLV 13	7.15	-1823	1678.82	0	0	0	No, e>l/2
SLV 3	6.35	-6434	713.93	43458	1095.92	1.535	Si
SLV 3	7.15	-6834	-1439.54	46159	1124.11	0.781	No, M>Mu

Verifica a taglio nel piano secondo D.M. 17-01-18 (N.T.C.) §7.8.2.2.2 con rottura per scorrimento in combinazioni non sismiche, γM = 3

Comb.	Quota	N	V par	M	σ0	σN	l'	fvd	Vt scorr.	Vt fess.diag.	Vt,lim	c.s.	Verifica
SLU 64	6.35	-5506	-196	29.16		37191	0.5287	10514	1557			7.94	Si
SLU 64	7.15	-5558	-196	155.43		37545	0.5287	10561	1564			7.97	Si
SLU 41	6.35	-5456	-186	26.02		36852	0.5287	10469	1550			8.35	Si
SLU 41	7.15	-5626	-186	139.11		38004	0.5287	10623	1573			8.47	Si
SLU 32	6.35	-5281	-184	26.17		35672	0.5287	10312	1527			8.3	Si
SLU 32	7.15	-5425	-184	140.3		36646	0.5287	10442	1546			8.4	Si
SLU 83	6.35	-6459	-217	33.01		43632	0.5287	10833	1604			7.4	Si
SLU 83	7.15	-6617	-217	166.18		44696	0.5287	10833	1604			7.4	Si
SLU 60	6.35	-5776	-210	24.95		39018	0.5287	10758	1593			7.6	Si
SLU 60	7.15	-5880	-210	157.57		39719	0.5287	10833	1604			7.64	Si
SLU 74	6.35	-6285	-215	33.15		42452	0.5287	10833	1604			7.46	Si
SLU 74	7.15	-6416	-215	167.37		43338	0.5287	10833	1604			7.46	Si
SLU 81	6.35	-6316	-238	24.43		42664	0.5287	10833	1604			6.73	Si
SLU 81	7.15	-6471	-239	175.37		43707	0.5287	10833	1604			6.72	Si
SLU 39	6.35	-5312	-207	17.45		35884	0.5287	10340	1531			7.38	Si
SLU 39	7.15	-5480	-208	148.3		37015	0.5287	10491	1553			7.48	Si
SLU 77	6.35	-6428	-193	41.73		43420	0.5287	10833	1604			8.31	Si
SLU 77	7.15	-6562	-193	158.19		44328	0.5287	10833	1604			8.3	Si
SLU 18	6.35	-4773	-179	17.96		32238	0.5287	9854	1459			8.17	Si
SLU 18	7.15	-4889	-179	130.5		33027	0.5287	9959	1474			8.25	Si

Verifica a taglio nel piano secondo D.M. 17-01-18 (N.T.C.) §7.8.2.2.2 con rottura per scorrimento in combinazioni sismiche, γM = 2

Comb.	Quota	N	V par	M	σ0	σN	l'	fvd	Vt scorr.	Vt fess.diag.	Vt,lim	c.s.	Verifica
SLV 4	6.35	-6434	2523	713.93		49930	0.4602	16250	2094			0.83	No, Vu<V
SLV 4	7.15	-6834	2636	-1439.54		151463	0.1611	16250	733			0.28	No, Vu<V
SLV 2	6.35	-7304	2890	957.3		65230	0.3999	16250	1820			0.63	No, Vu<V
SLV 2	7.15	-6881	2814	-1370.97		125777	0.1954	16250	889			0.32	No, Vu<V
SLV 16	6.35	-1253	-3196	-914.1		0	0	8333	0			0	No, Vu<V
SLV 16	7.15	-1775	-3120	1610.25		0	0	8333	0			0	No, Vu<V
SLV 13	6.35	-2124	-2829	-670.73		0	0	8333	0			0	No, Vu<V
SLV 13	7.15	-1823	-2942	1678.82		0	0	8333	0			0	No, Vu<V
SLV 11	6.35	-2051	-1623	-628.23		0	0	8333	0			0	No, Vu<V
SLV 11	7.15	-3490	-1313	462.83		31535	0.3953	14640	1620			1.23	Si
SLV 3	6.35	-6434	2523	713.93		49930	0.4602	16250	2094			0.83	No, Vu<V
SLV 3	7.15	-6834	2636	-1439.54		151463	0.1611	16250	733			0.28	No, Vu<V
SLV 12	6.35	-2051	-1623	-628.23		0	0	8333	0			0	No, Vu<V
SLV 12	7.15	-3490	-1313	462.83		31535	0.3953	14640	1620			1.23	Si
SLV 15	6.35	-1253	-3196	-914.1		0	0	8333	0			0	No, Vu<V
SLV 15	7.15	-1775	-3120	1610.25		0	0	8333	0			0	No, Vu<V
SLV 14	6.35	-2124	-2829	-670.73		0	0	8333	0			0	No, Vu<V
SLV 14	7.15	-1823	-2942	1678.82		0	0	8333	0			0	No, Vu<V
SLV 1	6.35	-7304	2890	957.3		65230	0.3999	16250	1820			0.63	No, Vu<V
SLV 1	7.15	-6881	2814	-1370.97		125777	0.1954	16250	889			0.32	No, Vu<V

Verifica a pressoflessione fuori piano D.M. 17-01-18 (N.T.C.)

quota 6.125 Wa 0.05 denominatore 8 γM = 2

Comb.	fd	Sa	σ0	N	M	Mc	Coeff.s.	Verifica
SLV 12	143750	0.38	10976	-1625	53.8	207.06	3.85	Si
SLV 11	143750	0.38	10976	-1625	53.8	207.06	3.85	Si
SLV 16	143750	0.38	13786	-2041	53.8	253.5	4.71	Si
SLV 15	143750	0.38	13786	-2041	53.8	253.5	4.71	Si
SLV 7	143750	0.38	14597	-2161	53.8	266.4	4.95	Si
SLV 8	143750	0.38	14597	-2161	53.8	266.4	4.95	Si
SLV 14	143750	0.38	19816	-2934	53.8	344.1	6.4	Si
SLV 13	143750	0.38	19816	-2934	53.8	344.1	6.4	Si
SLV 3	143750	0.38	25856	-3828	53.8	422.5	7.85	Si
SLV 4	143750	0.38	25856	-3828	53.8	422.5	7.85	Si

Verifica dei meccanismi locali di collasso con analisi cinematica lineare

forza di aggancio al piano = 0 quota mezzeria = 6.125 Wa = 0.05 Ta = 0.0752

Comb.	N top	N base	V orto	α0	M*	e*	a0*	aLim	Verifica
SLV 10	-998	-2691	147	0	178.7	0.902	0	9.97238	No
SLV 9	-998	-2691	147	0	178.7	0.902	0	9.97238	No
SLV 6	-1247	-2553	96	0	203.2	0.909	0	9.97238	No
SLV 11	-832	-518	-105	0	162.5	0.896	0	9.97238	No
SLV 5	-1247	-2553	96	0	203.2	0.909	0	9.97238	No
SLV 12	-832	-518	-105	0	162.5	0.896	0	9.97238	No
SLV 7	-1081	-381	-155	0	186.8	0.904	0	9.97238	No
SLV 8	-1081	-381	-155	0	186.8	0.904	0	9.97238	No
SLV 3	-1429	-981	-127	0	221.4	0.915	0	11.26714	No
SLV 4	-1429	-981	-127	0	221.4	0.915	0	11.26714	No

Tabella dei coefficienti di sicurezza minimi

Stato limite	Coeff.s.	Comb.	Verifica
PF_SLU	4.521	SLU 81	Si
V_SLU	6.722	SLU 81	Si
PF_SLV	0	SLV 11	No
V_SLV	0	SLV 11	No
PFFP_SLV	3.849	SLV 11	Si
R_SLV	0	SLV 3	No

Maschio 118

Verifiche condotte secondo D.M. 17-01-18 (N.T.C.)

Dati geometrici

X ini.	Y ini.	X fin.	Y fin.	Quota i.	Quota.s	l	Sp.	h netta	h ini.	h fin.	a	a.s.,sx	a.s.,dx
-19.687	5.798	-19.687	6.536	L4	L5	0.738	0.28	3.55	3.55	3.55			

Caratteristiche del materiale

(Circolare 7 21-01-19 C8.5.I) Muratura in mattoni pieni e malta di calce LC2_Corti

fb	fk	fvk0	fmedio	τ0	fv0	μ	ϕ	fv,lim	E	G	FC
600000			345000	9000	20000	0.58	0.77	32500	320000000	128000000	1.2

Verifica a pressoflessione nel piano secondo D.M. 17-01-18 NTC §7.8.2.2.1 in combinazioni non sismiche, γM = 3

Comb.	Quota	N	M	σ0	Mu	c.s.	Verifica
SLU 80	4.35	-9453	-175.23	45756	1528.58	8.723	Si
SLU 80	7.9	-6093	133.08	29489	1434.02	10.776	Si
SLU 79	4.35	-9459	-176.34	45786	1528.3	8.667	Si
SLU 79	7.9	-6100	132.5	29525	1434.77	10.828	Si
SLU 75	4.35	-9396	-168.79	45481	1531.1	9.071	Si
SLU 75	7.9	-6022	127.45	29146	1426.69	11.194	Si
SLU 77	4.35	-9564	-177.19	46293	1523.26	8.597	Si
SLU 77	7.9	-6198	133.6	30000	1444.52	10.812	Si
SLU 83	4.35	-9670	-178.43	46804	1517.7	8.506	Si
SLU 83	7.9	-6160	135.64	29817	1440.81	10.622	Si
SLU 74	4.35	-9402	-169.91	45510	1530.84	9.01	Si
SLU 74	7.9	-6029	126.88	29182	1427.46	11.251	Si
SLU 78	4.35	-9558	-176.07	46263	1523.57	8.653	Si
SLU 78	7.9	-6191	134.17	29964	1443.8	10.761	Si
SLU 84	4.35	-9664	-177.32	46775	1518.03	8.561	Si
SLU 84	7.9	-6153	136.22	29781	1440.08	10.572	Si
SLU 82	4.35	-9502	-170.04	45992	1526.31	8.976	Si
SLU 82	7.9	-5984	129.5	28963	1422.68	10.986	Si
SLU 81	4.35	-9508	-171.15	46021	1526.02	8.916	Si
SLU 81	7.9	-5991	128.92	28999	1423.47	11.041	Si

Verifica a pressoflessione nel piano secondo D.M. 17-01-18 NTC §7.8.2.2.1 in combinazioni sismiche, γM = 2

Comb.	Quota	N	M	σ0	Mu	c.s.	Verifica
SLV 9	4.35	-3030	-124.66	14666	983.68	7.891	Si
SLV 9	7.9	-2764	558	13380	908.18	1.628	Si
SLV 7	4.35	-9805	-94.26	47458	2212.36	23.47	Si
SLV 7	7.9	-5335	-405.7	25820	1552.19	3.826	Si
SLV 1	4.35	-6134	-594.54	29689	1713.09	2.881	Si
SLV 1	7.9	-3886	478.5	18807	1212.89	2.535	Si
SLV 6	4.35	-3433	-389.17	16617	1094.35	2.812	Si
SLV 6	7.9	-2886	699.91	13971	943.13	1.348	Si
SLV 11	4.35	-9402	170.24	45506	2176.78	12.786	Si
SLV 11	7.9	-5212	-547.61	25230	1525.97	2.787	Si
SLV 8	4.35	-9805	-94.26	47458	2212.36	23.47	Si
SLV 8	7.9	-5335	-405.7	25820	1552.19	3.826	Si

Comb.	Quota	N	M	σ0	Mu	c.s.	Verifica
SLV 5	4.35	-3433	-389.17	16617	1094.35	2.812	Si
SLV 5	7.9	-2886	699.91	13971	943.13	1.348	Si
SLV 10	4.35	-3030	-124.66	14666	983.68	7.891	Si
SLV 10	7.9	-2764	558	13380	908.18	1.628	Si
SLV 2	4.35	-6134	-594.54	29689	1713.09	2.881	Si
SLV 2	7.9	-3886	478.5	18807	1212.89	2.535	Si
SLV 12	4.35	-9402	170.24	45506	2176.78	12.786	Si
SLV 12	7.9	-5212	-547.61	25230	1525.97	2.787	Si

Verifica a taglio nel piano secondo D.M. 17-01-18 (N.T.C.) §7.8.2.2.2 con rottura per scorrimento in combinazioni non sismiche, γM = 3

Comb.	Quota	N	V par	M	σ0	σN	l'	fvd	Vt scorr.	Vt fess.diag.	Vt,lim	c.s.	Verifica
SLU 82	4.35	-9502	-919	-170.04		45992	0.7379	10833	2238			2.44	Si
SLU 82	7.9	-5984	-558	129.5		28963	0.7379	9417	1946			3.48	Si
SLU 78	4.35	-9558	-951	-176.07		46263	0.7379	10833	2238			2.35	Si
SLU 78	7.9	-6191	-603	134.17		29964	0.7379	9551	1973			3.27	Si
SLU 84	4.35	-9664	-960	-177.32		46775	0.7379	10833	2238			2.33	Si
SLU 84	7.9	-6153	-600	136.22		29781	0.7379	9526	1968			3.28	Si
SLU 75	4.35	-9396	-910	-168.79		45481	0.7379	10833	2238			2.46	Si
SLU 75	7.9	-6022	-561	127.45		29146	0.7379	9442	1951			3.48	Si
SLU 79	4.35	-9459	-951	-176.34		45786	0.7379	10833	2238			2.35	Si
SLU 79	7.9	-6100	-601	132.5		29525	0.7379	9492	1961			3.27	Si
SLU 74	4.35	-9402	-913	-169.91		45510	0.7379	10833	2238			2.45	Si
SLU 74	7.9	-6029	-562	126.88		29182	0.7379	9446	1952			3.47	Si
SLU 77	4.35	-9564	-954	-177.19		46293	0.7379	10833	2238			2.35	Si
SLU 77	7.9	-6198	-604	133.6		30000	0.7379	9556	1974			3.27	Si
SLU 83	4.35	-9670	-963	-178.43		46804	0.7379	10833	2238			2.32	Si
SLU 83	7.9	-6160	-602	135.64		29817	0.7379	9531	1969			3.27	Si
SLU 81	4.35	-9508	-922	-171.15		46021	0.7379	10833	2238			2.43	Si
SLU 81	7.9	-5991	-560	128.92		28999	0.7379	9422	1947			3.48	Si
SLU 80	4.35	-9453	-948	-175.23		45756	0.7379	10833	2238			2.36	Si
SLU 80	7.9	-6093	-599	133.08		29489	0.7379	9487	1960			3.27	Si

Verifica a taglio nel piano secondo D.M. 17-01-18 (N.T.C.) §7.8.2.2.2 con rottura per scorrimento in combinazioni sismiche, γM = 2

Comb.	Quota	N	V par	M	σ0	σN	l'	fvd	Vt scorr.	Vt fess.diag.	Vt,lim	c.s.	Verifica
SLV 16	4.35	-6701	2341	375.62		32435	0.7379	14820	3062			1.31	Si
SLV 16	7.9	-4213	1770	-326.2		20393	0.7379	12412	2564			1.45	Si
SLV 4	4.35	-8045	-2447	-506.07		38941	0.7379	16121	3331			1.36	Si
SLV 4	7.9	-4620	-1620	146.82		22362	0.7379	12806	2646			1.63	Si
SLV 10	4.35	-3030	-1635	-124.66		14666	0.7379	11266	2328			1.42	Si
SLV 10	7.9	-2764	-1170	558		19697	0.5012	12273	1722			1.47	Si
SLV 9	4.35	-3030	-1635	-124.66		14666	0.7379	11266	2328			1.42	Si
SLV 9	7.9	-2764	-1170	558		19697	0.5012	12273	1722			1.47	Si
SLV 1	4.35	-6134	-3509	-594.54		29689	0.7379	14271	2948			0.84	No, Vu<V
SLV 1	7.9	-3886	-2430	478.5		18820	0.7374	12097	2498			1.03	Si
SLV 3	4.35	-8045	-2447	-506.07		38941	0.7379	16121	3331			1.36	Si
SLV 3	7.9	-4620	-1620	146.82		22362	0.7379	12806	2646			1.63	Si
SLV 5	4.35	-3433	-3071	-389.17		16617	0.7379	11657	2408			0.78	No, Vu<V
SLV 5	7.9	-2886	-2188	699.91		27175	0.3793	13768	1462			0.67	No, Vu<V
SLV 6	4.35	-3433	-3071	-389.17		16617	0.7379	11657	2408			0.78	No, Vu<V
SLV 6	7.9	-2886	-2188	699.91		27175	0.3793	13768	1462			0.67	No, Vu<V
SLV 15	4.35	-6701	2341	375.62		32435	0.7379	14820	3062			1.31	Si
SLV 15	7.9	-4213	1770	-326.2		20393	0.7379	12412	2564			1.45	Si
SLV 2	4.35	-6134	-3509	-594.54		29689	0.7379	14271	2948			0.84	No, Vu<V
SLV 2	7.9	-3886	-2430	478.5		18820	0.7374	12097	2498			1.03	Si

Verifica a pressoflessione fuori piano D.M. 17-01-18 (N.T.C.)

quota 6.125 Wa 0.05 denominatore 8 γM = 2

Comb.	fd	Sa	σ0	N	M	Mc	Coeff.s.	Verifica
SLV 10	143750	0.38	12388	-2559	76.82	322	4.19	Si
SLV 9	143750	0.38	12388	-2559	76.82	322	4.19	Si
SLV 6	143750	0.38	13687	-2828	76.82	351.54	4.58	Si
SLV 5	143750	0.38	13687	-2828	76.82	351.54	4.58	Si
SLV 13	143750	0.38	18335	-3788	76.82	450.74	5.87	Si
SLV 14	143750	0.38	18335	-3788	76.82	450.74	5.87	Si
SLV 1	143750	0.38	22663	-4682	76.82	533.93	6.95	Si
SLV 2	143750	0.38	22663	-4682	76.82	533.93	6.95	Si
SLV 16	143750	0.38	24730	-5109	76.82	570.52	7.43	Si
SLV 15	143750	0.38	24730	-5109	76.82	570.52	7.43	Si

Verifica dei meccanismi locali di collasso con analisi cinematica lineare

forza di aggancio al piano = 0 quota mezzeria = 6.125 Wa = 0.05 Ta = 0.0752

Comb.	N top	N base	V orto	α0	M*	e*	a0*	aLim	Verifica
SLV 10	-2764	-3030	-245	0	386.3	0.928	0	9.97238	No
SLV 5	-2886	-3433	-244	0	398.6	0.93	0	9.97238	No
SLV 9	-2764	-3030	-245	0	386.3	0.928	0	9.97238	No
SLV 6	-2886	-3433	-244	0	398.6	0.93	0	9.97238	No
SLV 12	-5212	-9402	246	0.002	634.3	0.952	0.0295	9.97238	No
SLV 11	-5212	-9402	246	0.002	634.3	0.952	0.0295	9.97238	No
SLV 7	-5335	-9805	247	0.003	646.7	0.953	0.04039	9.97238	No
SLV 8	-5335	-9805	247	0.003	646.7	0.953	0.04039	9.97238	No
SLV 14	-3479	-4790	-73	0.028	458.5	0.937	0.43471	11.26714	No
SLV 13	-3479	-4790	-73	0.028	458.5	0.937	0.43471	11.26714	No

Tabella dei coefficienti di sicurezza minimi

Stato limite	Coeff.s.	Comb.	Verifica
PF_SLU	8.506	SLU 83	Si
V_SLU	2.324	SLU 83	Si
PF_SLV	1.348	SLV 5	Si
V_SLV	0.669	SLV 5	No

Stato limite	Coeff.s.	Comb.	Verifica
PFFP_SLV	4.192	SLV 9	Si
R_SLV	0	SLV 5	No

Maschio 119

Verifiche condotte secondo D.M. 17-01-18 (N.T.C.)

Dati geometrici

X ini.	Y ini.	X fin.	Y fin.	Quota i.	Quota.s	l	Sp.	h netta	h ini.	h fin.	a	a.s.,sx	a.s.,dx
-19.595	1.046	-19.595	1.283	L4	L5	0.236	0.14	3.55	3.55	3.55			

Caratteristiche del materiale

(Circolare 7 21-01-19 C8.5.I) Muratura in mattoni pieni e malta di calce LC2_Corti

fb	fk	fvk0	fmedio	τ0	fv0	μ	ϕ	fv,lim	E	G	FC
600000			345000	9000	20000	0.58	0.77	32500	320000000	128000000	1.2

Verifica a pressoflessione nel piano secondo D.M. 17-01-18 NTC §7.8.2.2.1 in combinazioni non sismiche, γM = 3

Comb.	Quota	N	M	σ0	Mu	c.s.	Verifica
SLU 50	4.35	-1361	-13.88	41103	79.72	5.744	Si
SLU 50	6.45	-1711	24.82	51667	73.98	2.98	Si
SLU 72	4.35	-1588	-10.37	47973	77.21	7.447	Si
SLU 72	6.45	-1869	23.16	56463	67.83	2.929	Si
SLU 66	4.35	-1567	-10.31	47335	77.63	7.53	Si
SLU 66	6.45	-1859	22.92	56147	68.3	2.98	Si
SLU 49	4.35	-1384	-13.77	41793	79.67	5.785	Si
SLU 49	6.45	-1724	24.91	52084	73.53	2.951	Si
SLU 70	4.35	-1611	-10.43	48646	76.72	7.354	Si
SLU 70	6.45	-1899	23.39	57369	66.42	2.839	Si
SLU 48	4.35	-1383	-13.94	41776	79.68	5.715	Si
SLU 48	6.45	-1741	25.06	52574	72.99	2.913	Si
SLU 71	4.35	-1588	-10.54	47956	77.22	7.328	Si
SLU 71	6.45	-1886	23.3	56952	67.08	2.879	Si
SLU 67	4.35	-1568	-10.14	47352	77.62	7.655	Si
SLU 67	6.45	-1843	22.77	55657	69.02	3.03	Si
SLU 69	4.35	-1610	-10.6	48629	76.73	7.238	Si
SLU 69	6.45	-1916	23.54	57859	65.63	2.788	Si
SLU 51	4.35	-1361	-13.71	41120	79.72	5.815	Si
SLU 51	6.45	-1694	24.68	51178	74.48	3.018	Si

Verifica a pressoflessione nel piano secondo D.M. 17-01-18 NTC §7.8.2.2.1 in combinazioni sismiche, γM = 2

Comb.	Quota	N	M	σ0	Mu	c.s.	Verifica
SLV 9	4.35	830	-186.17	0	0	0	No, Trazione
SLV 9	6.45	-3059	166.45	92394	88.2	0.53	No, M>Mu
SLV 2	4.35	140	-99.15	0	0	0	No, Trazione
SLV 2	6.45	-2727	100.4	82352	105.11	1.047	Si
SLV 12	4.35	-3584	194.42	108239	48.37	0.249	No, M>Mu
SLV 12	6.45	804	-156.09	0	0	0	No, Trazione
SLV 10	4.35	830	-186.17	0	0	0	No, Trazione
SLV 10	6.45	-3059	166.45	92394	88.2	0.53	No, M>Mu
SLV 5	4.35	1225	-207.49	0	0	0	No, Trazione
SLV 5	6.45	-3530	188.07	106608	53.22	0.283	No, M>Mu
SLV 8	4.35	-3189	173.11	96328	79.81	0.461	No, M>Mu
SLV 8	6.45	334	-134.47	0	0	0	No, Trazione
SLV 11	4.35	-3584	194.42	108239	48.37	0.249	No, M>Mu
SLV 11	6.45	804	-156.09	0	0	0	No, Trazione
SLV 7	4.35	-3189	173.11	96328	79.81	0.461	No, M>Mu
SLV 7	6.45	334	-134.47	0	0	0	No, Trazione
SLV 6	4.35	1225	-207.49	0	0	0	No, Trazione
SLV 6	6.45	-3530	188.07	106608	53.22	0.283	No, M>Mu
SLV 1	4.35	140	-99.15	0	0	0	No, Trazione
SLV 1	6.45	-2727	100.4	82352	105.11	1.047	Si

Verifica a taglio nel piano secondo D.M. 17-01-18 (N.T.C.) §7.8.2.2.2 con rottura per scorrimento in combinazioni non sismiche, γM = 3

Comb.	Quota	N	V par	M	σ0	σN	l'	fvd	Vt scorr.	Vt fess.diag.	Vt,lim	c.s.	Verifica
SLU 45	4.35	-1340	-46	-13.65		40482	0.2365	10833	359			7.82	Si
SLU 45	6.45	-1684	-50	24.44		50861	0.2365	10833	359			7.19	Si
SLU 44	4.35	-1276	-41	-13.01		38542	0.2365	10694	354			8.53	Si
SLU 44	6.45	-1570	-47	23.34		47426	0.2365	10833	359			7.68	Si
SLU 50	4.35	-1361	-47	-13.88		41103	0.2365	10833	359			7.71	Si
SLU 50	6.45	-1711	-51	24.82		51667	0.2365	10833	359			7.1	Si
SLU 47	4.35	-1319	-43	-13.31		39837	0.2365	10833	359			8.41	Si
SLU 47	6.45	-1627	-48	23.96		49139	0.2365	10833	359			7.48	Si
SLU 69	4.35	-1610	-42	-10.6		48629	0.2365	10833	359			8.59	Si
SLU 69	6.45	-1916	-46	23.54		57859	0.2365	10833	359			7.73	Si
SLU 43	4.35	-1275	-44	-13.3		38514	0.2365	10691	354			8.02	Si
SLU 43	6.45	-1597	-48	23.58		48243	0.2365	10833	359			7.47	Si
SLU 51	4.35	-1361	-45	-13.71		41120	0.2365	10833	359			7.99	Si
SLU 51	6.45	-1694	-50	24.68		51178	0.2365	10833	359			7.21	Si
SLU 48	4.35	-1383	-47	-13.94		41776	0.2365	10833	359			7.62	Si
SLU 48	6.45	-1741	-51	25.06		52574	0.2365	10833	359			7.01	Si
SLU 49	4.35	-1384	-45	-13.77		41793	0.2365	10833	359			7.89	Si
SLU 49	6.45	-1724	-50	24.91		52084	0.2365	10833	359			7.12	Si
SLU 46	4.35	-1341	-44	-13.48		40499	0.2365	10833	359			8.1	Si
SLU 46	6.45	-1668	-49	24.29		50372	0.2365	10833	359			7.31	Si

Verifica a taglio nel piano secondo D.M. 17-01-18 (N.T.C.) §7.8.2.2.2 con rottura per scorrimento in combinazioni sismiche, γM = 2

Comb.	Quota	N	V par	M	σ0	σN	l'	fvd	Vt scorr.	Vt fess.diag.	Vt,lim	c.s.	Verifica
SLV 10	4.35	830	-378	-186.17		0	0	8333	0			0	No, Vu<V
SLV 10	6.45	-3059	-383	166.45		114098	0.1915	16250	436			1.14	Si
SLV 2	4.35	140	-310	-99.15		0	0	8333	0			0	No, Vu<V
SLV 2	6.45	-2727	-288	100.4		82352	0.2365	16250	538			1.87	Si
SLV 7	4.35	-3189	323	173.11		118706	0.1919	16250	437			1.35	Si
SLV 7	6.45	334	321	-134.47		0	0	8333	0			0	No, Vu<V
SLV 11	4.35	-3584	421	194.42		133333	0.192	16250	437			1.04	Si
SLV 11	6.45	804	404	-156.09		0	0	8333	0			0	No, Vu<V
SLV 1	4.35	140	-310	-99.15		0	0	8333	0			0	No, Vu<V
SLV 1	6.45	-2727	-288	100.4		82352	0.2365	16250	538			1.87	Si
SLV 8	4.35	-3189	323	173.11		118706	0.1919	16250	437			1.35	Si
SLV 8	6.45	334	321	-134.47		0	0	8333	0			0	No, Vu<V
SLV 6	4.35	1225	-476	-207.49		0	0	8333	0			0	No, Vu<V
SLV 6	6.45	-3530	-466	188.07		129362	0.1949	16250	443			0.95	No, Vu<V
SLV 9	4.35	830	-378	-186.17		0	0	8333	0			0	No, Vu<V
SLV 9	6.45	-3059	-383	166.45		114098	0.1915	16250	436			1.14	Si
SLV 5	4.35	1225	-476	-207.49		0	0	8333	0			0	No, Vu<V
SLV 5	6.45	-3530	-466	188.07		129362	0.1949	16250	443			0.95	No, Vu<V
SLV 12	4.35	-3584	421	194.42		133333	0.192	16250	437			1.04	Si
SLV 12	6.45	804	404	-156.09		0	0	8333	0			0	No, Vu<V

Verifica a pressoflessione fuori piano D.M. 17-01-18 (N.T.C.)

quota 6.125 Wa 0.03 denominatore 8 γM = 2

Comb.	fd	Sa	σ0	N	M	Mc	Coeff.s.	Verifica
SLV 11	143750	0.38	0	777	12.87	0	0	No, Trazione
SLV 12	143750	0.38	0	777	12.87	0	0	No, Trazione
SLV 16	143750	0.38	0	-34	12.87	0	0	No, e>t/2
SLV 7	143750	0.38	0	314	12.87	0	0	No, Trazione
SLV 8	143750	0.38	0	314	12.87	0	0	No, Trazione
SLV 15	143750	0.38	0	-34	12.87	0	0	No, e>t/2
SLV 5	143750	0.38	107044	-3544	12.87	30.75	2.39	Si
SLV 6	143750	0.38	107044	-3544	12.87	30.75	2.39	Si
SLV 10	143750	0.38	93073	-3082	12.87	51.4	3.99	Si
SLV 9	143750	0.38	93073	-3082	12.87	51.4	3.99	Si

Verifica dei meccanismi locali di collasso con analisi cinematica lineare

forza di aggancio al piano = 0 quota mezzeria = 6.125 Wa = 0.03 Ta = 0.1503

Comb.	N top	N base	V orto	α0	M*	e*	a0*	aLim	Verifica
SLV 5	284	1225	1	0	0	0	0	16.27364	No, Trazione
SLV 6	284	1225	1	0	0	0	0	16.27364	No, Trazione
SLV 1	-203	140	0	0	0	0	0	16.27364	No, Trazione
SLV 2	-203	140	0	0	0	0	0	16.27364	No, Trazione
SLV 10	140	830	1	0	0	0	0	16.27364	No, Trazione
SLV 9	140	830	1	0	0	0	0	16.27364	No, Trazione
SLV 12	-1731	-3584	-1	0.021	192.8	0.974	0.3062	16.27364	No
SLV 11	-1731	-3584	-1	0.021	192.8	0.974	0.3062	16.27364	No
SLV 8	-1587	-3189	-1	0.021	178.1	0.972	0.30721	16.27364	No
SLV 7	-1587	-3189	-1	0.021	178.1	0.972	0.30721	16.27364	No

Tabella dei coefficienti di sicurezza minimi

Stato limite	Coeff.s.	Comb.	Verifica
PF_SLU	2.788	SLU 69	Si
V_SLU	7.014	SLU 48	Si
PF_SLV	0	SLV 16	No
V_SLV	0	SLV 1	No
PFFP_SLV	0	SLV 12	No
R_SLV	0	SLV 10	No

Maschio 120

Verifiche condotte secondo D.M. 17-01-18 (N.T.C.)

Dati geometrici

X ini.	Y ini.	X fin.	Y fin.	Quota i.	Quota.s	l	Sp.	h netta	h ini.	h fin.	a	a.s.,sx	a.s.,dx
-19.595	1.983	-19.595	5.658	L4	L5	3.675	0.14	3.55	3.55	3.55			

Caratteristiche del materiale

(Circolare 7 21-01-19 C8.5.I) Muratura in mattoni pieni e malta di calce LC2_Corti

fb	fk	fvk0	fmedio	τ0	fv0	μ	ϕ	fv,lim	E	G	FC
600000			345000	9000	20000	0.58	0.77	32500	320000000	128000000	1.2

Verifica a pressoflessione nel piano secondo D.M. 17-01-18 NTC §7.8.2.2.1 in combinazioni non sismiche, γM = 3

Comb.	Quota	N	M	σ0	Mu	c.s.	Verifica
SLU 73	4.35	-18487	847.92	35933	18984.73	22.39	Si
SLU 73	6.45	-15888	-475.93	30880	18125.99	38.086	Si
SLU 84	4.35	-19682	881.07	38255	19180.68	21.77	Si
SLU 84	6.45	-17050	-639.08	33140	18583.34	29.078	Si
SLU 61	4.35	-17447	817.04	33911	18712.15	22.902	Si
SLU 61	6.45	-14941	-394.42	29040	17666.09	44.79	Si
SLU 40	4.35	-16321	824.7	31723	18310.48	22.203	Si
SLU 40	6.45	-14159	-652.89	27520	17226.69	26.385	Si
SLU 81	4.35	-19339	889.36	37590	19137.31	21.518	Si
SLU 81	6.45	-16669	-604.85	32400	18446.59	30.498	Si
SLU 42	4.35	-16717	790.14	32492	18464.26	23.368	Si
SLU 42	6.45	-14583	-692.74	28344	17471.58	25.221	Si

Comb.	Quota	N	M	σ0	Mu	c.s.	Verifica
SLU 76	4.35	-18882	813.36	36701	19063.43	23.438	Si
SLU 76	6.45	-16312	-515.78	31705	18306.57	35.493	Si
SLU 82	4.35	-19287	915.63	37487	19129.7	20.892	Si
SLU 82	6.45	-16626	-599.23	32316	18430.23	30.757	Si
SLU 39	4.35	-16374	798.43	31826	18331.84	22.96	Si
SLU 39	6.45	-14202	-658.51	27604	17252.43	26.199	Si
SLU 83	4.35	-19735	854.81	38358	19186.45	22.445	Si
SLU 83	6.45	-17094	-644.7	33225	18598.09	28.848	Si

Verifica a pressoflessione nel piano secondo D.M. 17-01-18 NTC §7.8.2.2.1 in combinazioni sismiche, γM = 2

Comb.	Quota	N	M	σ0	Mu	c.s.	Verifica
SLV 7	4.35	-14349	11114.02	27891	20347.99	1.831	Si
SLV 7	6.45	-18453	-7936.02	35867	23953.9	3.018	Si
SLV 13	4.35	-11848	-4270.68	23029	17667.31	4.137	Si
SLV 13	6.45	-4698	3953.37	9131	7987.03	2.02	Si
SLV 11	4.35	-13838	10067.35	26896	19829.61	1.97	Si
SLV 11	6.45	-15682	-6733.38	30480	21626.47	3.212	Si
SLV 8	4.35	-14349	11114.02	27891	20347.99	1.831	Si
SLV 8	6.45	-18453	-7936.02	35867	23953.9	3.018	Si
SLV 5	4.35	-12206	-9065.83	23725	18073.37	1.994	Si
SLV 5	6.45	-6530	6346.56	12692	10752.12	1.694	Si
SLV 10	4.35	-11695	-10112.51	22731	17490.91	1.73	Si
SLV 10	6.45	-3758	7549.2	0	0	0	No, e>l/2
SLV 9	4.35	-11695	-10112.51	22731	17490.91	1.73	Si
SLV 9	6.45	-3758	7549.2	0	0	0	No, e>l/2
SLV 14	4.35	-11848	-4270.68	23029	17667.31	4.137	Si
SLV 14	6.45	-4698	3953.37	9131	7987.03	2.02	Si
SLV 6	4.35	-12206	-9065.83	23725	18073.37	1.994	Si
SLV 6	6.45	-6530	6346.56	12692	10752.12	1.694	Si
SLV 12	4.35	-13838	10067.35	26896	19829.61	1.97	Si
SLV 12	6.45	-15682	-6733.38	30480	21626.47	3.212	Si

Verifica a taglio nel piano secondo D.M. 17-01-18 (N.T.C.) §7.8.2.2.2 con rottura per scorrimento in combinazioni non sismiche, γM = 3

Comb.	Quota	N	V par	M	σ0	σN	l'	fvd	Vt scorr.	Vt fess.diag.	Vt,lim	c.s.	Verifica
SLU 82	4.35	-19287	1000	915.63		37487	3.6749	10554	5430			5.43	Si
SLU 82	6.45	-16626	742	-599.23		32316	3.6749	9864	5075			6.84	Si
SLU 76	4.35	-18882	986	813.36		36701	3.6749	10449	5376			5.45	Si
SLU 76	6.45	-16312	736	-515.78		31705	3.6749	9783	5033			6.84	Si
SLU 83	4.35	-19735	1010	854.81		38358	3.6749	10670	5490			5.43	Si
SLU 83	6.45	-17094	750	-644.7		33225	3.6749	9985	5137			6.85	Si
SLU 81	4.35	-19339	982	889.36		37590	3.6749	10568	5437			5.53	Si
SLU 81	6.45	-16669	722	-604.85		32400	3.6749	9876	5081			7.03	Si
SLU 78	4.35	-19536	1013	766.28		37972	3.6749	10619	5463			5.39	Si
SLU 78	6.45	-16991	760	-569.49		33025	3.6749	9959	5124			6.74	Si
SLU 75	4.35	-19141	985	800.84		37204	3.6749	10516	5410			5.49	Si
SLU 75	6.45	-16567	733	-529.63		32201	3.6749	9849	5067			6.92	Si
SLU 79	4.35	-19366	984	735.03		37641	3.6749	10574	5440			5.53	Si
SLU 79	6.45	-16808	730	-565		32670	3.6749	9912	5099			6.98	Si
SLU 77	4.35	-19589	995	740.01		38075	3.6749	10632	5470			5.5	Si
SLU 77	6.45	-17035	740	-575.11		33110	3.6749	9970	5130			6.93	Si
SLU 84	4.35	-19682	1028	881.07		38255	3.6749	10656	5483			5.33	Si
SLU 84	6.45	-17050	770	-639.08		33140	3.6749	9974	5132			6.67	Si
SLU 80	4.35	-19313	1002	761.3		37538	3.6749	10561	5433			5.42	Si
SLU 80	6.45	-16765	750	-559.38		32585	3.6749	9900	5094			6.79	Si

Verifica a taglio nel piano secondo D.M. 17-01-18 (N.T.C.) §7.8.2.2.2 con rottura per scorrimento in combinazioni sismiche, γM = 2

Comb.	Quota	N	V par	M	σ0	σN	l'	fvd	Vt scorr.	Vt fess.diag.	Vt,lim	c.s.	Verifica
SLV 8	4.35	-14349	14207	11114.02		32142	3.1888	14762	6590			0.46	No, Vu<V
SLV 8	6.45	-18453	14058	-7936.02		35867	3.6749	15507	7978			0.57	No, Vu<V
SLV 5	4.35	-12206	-10579	-9065.83		26547	3.2842	13643	6273			0.59	No, Vu<V
SLV 5	6.45	-6530	-10473	6346.56		17963	2.5966	11926	4335			0.41	No, Vu<V
SLV 14	4.35	-11848	-7047	-4270.68		23029	3.6749	12939	6657			0.94	No, Vu<V
SLV 14	6.45	-4698	-7728	3953.37		11231	2.9878	10580	4425			0.57	No, Vu<V
SLV 10	4.35	-11695	-12953	-10112.51		28625	2.9182	14058	5744			0.44	No, Vu<V
SLV 10	6.45	-3758	-13169	7549.2		0	0	8333	0			0	No, Vu<V
SLV 9	4.35	-11695	-12953	-10112.51		28625	2.9182	14058	5744			0.44	No, Vu<V
SLV 9	6.45	-3758	-13169	7549.2		0	0	8333	0			0	No, Vu<V
SLV 11	4.35	-13838	11833	10067.35		29684	3.3298	14270	6652			0.56	No, Vu<V
SLV 11	6.45	-15682	11363	-6733.38		30480	3.6749	14429	7424			0.65	No, Vu<V
SLV 13	4.35	-11848	-7047	-4270.68		23029	3.6749	12939	6657			0.94	No, Vu<V
SLV 13	6.45	-4698	-7728	3953.37		11231	2.9878	10580	4425			0.57	No, Vu<V
SLV 6	4.35	-12206	-10579	-9065.83		26547	3.2842	13643	6273			0.59	No, Vu<V
SLV 6	6.45	-6530	-10473	6346.56		17963	2.5966	11926	4335			0.41	No, Vu<V
SLV 12	4.35	-13838	11833	10067.35		29684	3.3298	14270	6652			0.56	No, Vu<V
SLV 12	6.45	-15682	11363	-6733.38		30480	3.6749	14429	7424			0.65	No, Vu<V
SLV 7	4.35	-14349	14207	11114.02		32142	3.1888	14762	6590			0.46	No, Vu<V
SLV 7	6.45	-18453	14058	-7936.02		35867	3.6749	15507	7978			0.57	No, Vu<V

Verifica a pressoflessione fuori piano D.M. 17-01-18 (N.T.C.)

quota 6.125 Wa 0.03 denominatore 8 γM = 2

Comb.	fd	Sa	σ0	N	M	Mc	Coeff.s.	Verifica
SLV 9	143750	0.38	7942	-4086	200	267.43	1.34	Si
SLV 10	143750	0.38	7942	-4086	200	267.43	1.34	Si
SLV 13	143750	0.38	9691	-4986	200	321.34	1.61	Si
SLV 14	143750	0.38	9691	-4986	200	321.34	1.61	Si
SLV 5	143750	0.38	13380	-6884	200	429.12	2.15	Si
SLV 6	143750	0.38	13380	-6884	200	429.12	2.15	Si
SLV 16	143750	0.38	16629	-8556	200	517.38	2.59	Si
SLV 15	143750	0.38	16629	-8556	200	517.38	2.59	Si
SLV 2	143750	0.38	27820	-14313	200	773.79	3.87	Si

Comb.	fd	Sa	σ0	N	M	Mc	Coeff.s.	Verifica
SLV 1	143750	0.38	27820	-14313	200	773.79	3.87	Si

Verifica dei meccanismi locali di collasso con analisi cinematica lineare

forza di aggancio al piano = 0 quota mezzeria = 6.125 Wa = 0.03 Ta = 0.1503

Comb.	N top	N base	V orto	α0	M*	e*	a0*	aLim	Verifica
SLV 8	-13180	-14349	21	0.021	1599.8	0.953	0.31281	16.27364	No
SLV 7	-13180	-14349	21	0.021	1599.8	0.953	0.31281	16.27364	No
SLV 12	-10944	-13838	19	0.021	1372.8	0.946	0.31906	16.27364	No
SLV 11	-10944	-13838	19	0.021	1372.8	0.946	0.31906	16.27364	No
SLV 4	-13799	-14196	8	0.021	1662.7	0.955	0.32391	16.27364	No
SLV 3	-13799	-14196	8	0.021	1662.7	0.955	0.32391	16.27364	No
SLV 6	-7494	-12206	-20	0.021	1023.5	0.931	0.32974	16.27364	No
SLV 5	-7494	-12206	-20	0.021	1023.5	0.931	0.32974	16.27364	No
SLV 2	-12093	-13553	-4	0.022	1489.4	0.95	0.33366	16.27364	No
SLV 1	-12093	-13553	-4	0.022	1489.4	0.95	0.33366	16.27364	No

Tabella dei coefficienti di sicurezza minimi

Stato limite	Coeff.s.	Comb.	Verifica
PF_SLU	20.892	SLU 82	Si
V_SLU	5.332	SLU 84	Si
PF_SLV	0	SLV 9	No
V_SLV	0	SLV 9	No
PFFP_SLV	1.337	SLV 9	Si
R_SLV	0.019	SLV 7	No

Maschio 121

Verifiche condotte secondo D.M. 17-01-18 (N.T.C.)

Dati geometrici

X ini.	Y ini.	X fin.	Y fin.	Quota i.	Quota.s	l	Sp.	h netta	h ini.	h fin.	a	a.s.,sx	a.s.,dx
-16.2	-3.254	-17.275	-3.254	L4	L5	1.075	0.28	3.55	3.55	3.55			

Caratteristiche del materiale

(Circolare 7 21-01-19 C8.5.I) Muratura in mattoni pieni e malta di calce LC2_Corti

fb	fk	fvk0	fmedio	τ0	fv0	μ	ϕ	fv,lim	E	G	FC
600000			345000	9000	20000	0.58	0.77	32500	320000000	128000000	1.2

Verifica a pressoflessione nel piano secondo D.M. 17-01-18 NTC §7.8.2.2.1 in combinazioni non sismiche, γM = 3

Comb.	Quota	N	M	σ0	Mu	c.s.	Verifica
SLU 77	5.25	-11855	-142.42	39388	3291.06	23.108	Si
SLU 77	7.15	-10048	928.79	33382	3187.43	3.432	Si
SLU 78	5.25	-11718	-130.38	38930	3288.21	25.22	Si
SLU 78	7.15	-9884	923.38	32837	3170.92	3.434	Si
SLU 76	5.25	-11273	-131.59	37453	3273.33	24.874	Si
SLU 76	7.15	-9454	895.62	31409	3122.11	3.486	Si
SLU 84	5.25	-11755	-145.16	39054	3289.07	22.658	Si
SLU 84	7.15	-9971	921.79	33125	3179.8	3.45	Si
SLU 75	5.25	-11460	-153.25	38074	3280.64	21.407	Si
SLU 75	7.15	-9688	917.45	32187	3149.72	3.433	Si
SLU 81	5.25	-11635	-180.08	38657	3286.11	18.248	Si
SLU 81	7.15	-9939	921.26	33021	3176.63	3.448	Si
SLU 74	5.25	-11598	-165.3	38532	3285.05	19.874	Si
SLU 74	7.15	-9852	922.86	32733	3167.63	3.432	Si
SLU 73	5.25	-11016	-154.47	36598	3260.74	21.11	Si
SLU 73	7.15	-9258	889.69	30759	3097.23	3.481	Si
SLU 82	5.25	-11498	-168.04	38199	3281.92	19.531	Si
SLU 82	7.15	-9775	915.86	32476	3159.34	3.45	Si
SLU 83	5.25	-11893	-157.21	39512	3291.69	20.938	Si
SLU 83	7.15	-10135	927.19	33671	3195.68	3.447	Si

Verifica a pressoflessione nel piano secondo D.M. 17-01-18 NTC §7.8.2.2.1 in combinazioni sismiche, γM = 2

Comb.	Quota	N	M	σ0	Mu	c.s.	Verifica
SLV 1	5.25	-12961	3191.05	43059	4511.31	1.414	Si
SLV 1	7.15	-6049	-1077.48	20096	2716.48	2.521	Si
SLV 4	5.25	-11402	3976.24	37881	4228.53	1.063	Si
SLV 4	7.15	-2598	-1650.18	0	0	0	No, e>l/2
SLV 2	5.25	-12961	3191.05	43059	4511.31	1.414	Si
SLV 2	7.15	-6049	-1077.48	20096	2716.48	2.521	Si
SLV 13	5.25	-4643	-4216.93	0	0	0	No, e>l/2
SLV 13	7.15	-10747	2948.73	35706	4088.58	1.387	Si
SLV 7	5.25	-6673	2299.5	22169	2935.83	1.277	Si
SLV 7	7.15	-216	-909.16	0	0	0	No, e>l/2
SLV 3	5.25	-11402	3976.24	37881	4228.53	1.063	Si
SLV 3	7.15	-2598	-1650.18	0	0	0	No, e>l/2
SLV 16	5.25	-3085	-3431.74	0	0	0	No, e>l/2
SLV 16	7.15	-7296	2376.03	24240	3143.65	1.323	Si
SLV 8	5.25	-6673	2299.5	22169	2935.83	1.277	Si
SLV 8	7.15	-216	-909.16	0	0	0	No, e>l/2
SLV 14	5.25	-4643	-4216.93	0	0	0	No, e>l/2
SLV 14	7.15	-10747	2948.73	35706	4088.58	1.387	Si
SLV 15	5.25	-3085	-3431.74	0	0	0	No, e>l/2
SLV 15	7.15	-7296	2376.03	24240	3143.65	1.323	Si

Verifica a taglio nel piano secondo D.M. 17-01-18 (N.T.C.) §7.8.2.2.2 con rottura per scorrimento in combinazioni non sismiche, γM = 3

Comb.	Quota	N	V par	M	σ0	σN	l'	fvd	Vt scorr.	Vt fess.diag.	Vt,lim	c.s.	Verifica
SLU 81	5.25	-11635	-635	-180.08		38657	1.075	10710	3224			5.08	Si
SLU 81	7.15	-9939	-51	921.26		33021	1.075	9958	2997			58.21	Si
SLU 40	5.25	-9535	-545	-148		31679	1.075	9779	2944			5.4	Si
SLU 40	7.15	-8246	-52	757.91		27395	1.075	9208	2772			53.16	Si
SLU 75	5.25	-11460	-586	-153.25		38074	1.075	10632	3200			5.46	Si
SLU 75	7.15	-9688	-104	917.45		32187	1.075	9847	2964			28.43	Si
SLU 82	5.25	-11498	-622	-168.04		38199	1.075	10649	3205			5.15	Si
SLU 82	7.15	-9775	-96	915.86		32476	1.075	9886	2976			31.07	Si
SLU 74	5.25	-11598	-599	-165.3		38532	1.075	10693	3219			5.38	Si
SLU 74	7.15	-9852	-60	922.86		32733	1.075	9920	2986			49.77	Si
SLU 32	5.25	-9636	-522	-145.25		32012	1.075	9824	2957			5.66	Si
SLU 32	7.15	-8323	-16	764.91		27652	1.075	9242	2782			169.94	Si
SLU 73	5.25	-11016	-584	-154.47		36598	1.075	10435	3141			5.38	Si
SLU 73	7.15	-9258	-148	889.69		30759	1.075	9657	2907			19.59	Si
SLU 39	5.25	-9673	-558	-160.04		32137	1.075	9840	2962			5.3	Si
SLU 39	7.15	-8410	-8	763.32		27940	1.075	9281	2794			355.15	Si
SLU 83	5.25	-11893	-602	-157.21		39512	1.075	10824	3258			5.41	Si
SLU 83	7.15	-10135	-28	927.19		33671	1.075	10045	3023			106.3	Si
SLU 84	5.25	-11755	-589	-145.16		39054	1.075	10763	3240			5.5	Si
SLU 84	7.15	-9971	-73	921.79		33125	1.075	9972	3002			41.28	Si

Verifica a taglio nel piano secondo D.M. 17-01-18 (N.T.C.) §7.8.2.2.2 con rottura per scorrimento in combinazioni sismiche, γM = 2

Comb.	Quota	N	V par	M	σ0	σN	l'	fvd	Vt scorr.	Vt fess.diag.	Vt,lim	c.s.	Verifica
SLV 13	5.25	-4643	-6877	-4216.93		0	0	8333	0			0	No, Vu<V
SLV 13	7.15	-10747	-2607	2948.73		48625	0.7894	16250	3592			1.38	Si
SLV 7	5.25	-6673	2542	2299.5		41185	0.5786	16250	2633			1.04	Si
SLV 7	7.15	-216	1469	-909.16		0	0	8333	0			0	No, Vu<V
SLV 4	5.25	-11402	6053	3976.24		71910	0.5663	16250	2577			0.43	No, Vu<V
SLV 4	7.15	-2598	2427	-1650.18		0	0	8333	0			0	No, Vu<V
SLV 15	5.25	-3085	-6208	-3431.74		0	0	8333	0			0	No, Vu<V
SLV 15	7.15	-7296	-2077	2376.03		41003	0.6355	16250	2892			1.39	Si
SLV 14	5.25	-4643	-6877	-4216.93		0	0	8333	0			0	No, Vu<V
SLV 14	7.15	-10747	-2607	2948.73		48625	0.7894	16250	3592			1.38	Si
SLV 1	5.25	-12961	5384	3191.05		52971	0.8738	16250	3976			0.74	No, Vu<V
SLV 1	7.15	-6049	1898	-1077.48		20096	1.075	12353	3718			1.96	Si
SLV 3	5.25	-11402	6053	3976.24		71910	0.5663	16250	2577			0.43	No, Vu<V
SLV 3	7.15	-2598	2427	-1650.18		0	0	8333	0			0	No, Vu<V
SLV 8	5.25	-6673	2542	2299.5		41185	0.5786	16250	2633			1.04	Si
SLV 8	7.15	-216	1469	-909.16		0	0	8333	0			0	No, Vu<V
SLV 16	5.25	-3085	-6208	-3431.74		0	0	8333	0			0	No, Vu<V
SLV 16	7.15	-7296	-2077	2376.03		41003	0.6355	16250	2892			1.39	Si
SLV 2	5.25	-12961	5384	3191.05		52971	0.8738	16250	3976			0.74	No, Vu<V
SLV 2	7.15	-6049	1898	-1077.48		20096	1.075	12353	3718			1.96	Si

Verifica a pressoflessione fuori piano D.M. 17-01-18 (N.T.C.)

quota 6.125 Wa 0.05 denominatore 8 γM = 2

Comb.	fd	Sa	σ0	N	M	Mc	Coeff.s.	Verifica
SLV 11	143750	0.38	5172	-1557	109.37	208.71	1.91	Si
SLV 12	143750	0.38	5172	-1557	109.37	208.71	1.91	Si
SLV 15	143750	0.38	6884	-2072	109.37	273.74	2.5	Si
SLV 16	143750	0.38	6884	-2072	109.37	273.74	2.5	Si
SLV 7	143750	0.38	13298	-4003	109.37	499.39	4.57	Si
SLV 8	143750	0.38	13298	-4003	109.37	499.39	4.57	Si
SLV 14	143750	0.38	16478	-4960	109.37	600.73	5.49	Si
SLV 13	143750	0.38	16478	-4960	109.37	600.73	5.49	Si
SLV 3	143750	0.38	33972	-10225	109.37	1033.54	9.45	Si
SLV 4	143750	0.38	33972	-10225	109.37	1033.54	9.45	Si

Verifica dei meccanismi locali di collasso con analisi cinematica lineare

forza di aggancio al piano = 0 quota mezzeria = 6.125 Wa = 0.05 Ta = 0.0752

Comb.	N top	N base	V orto	α0	M*	e*	a0*	aLim	Verifica
SLV 12	-1047	-4944	-133	0	269.2	0.889	0	9.97238	No
SLV 8	316	-3345	-110	0	0	0	0	9.97238	No, Trazione
SLV 7	316	-3345	-110	0	0	0	0	9.97238	No, Trazione
SLV 11	-1047	-4944	-133	0	269.2	0.889	0	9.97238	No
SLV 1	-5439	-5920	74	0.034	705.5	0.94	0.52153	11.26714	No
SLV 2	-5439	-5920	74	0.034	705.5	0.94	0.52153	11.26714	No
SLV 15	-6591	-9201	-76	0.034	822.3	0.947	0.52829	11.26714	No
SLV 16	-6591	-9201	-76	0.034	822.3	0.947	0.52829	11.26714	No
SLV 6	-10983	-10178	132	0.032	1268.7	0.964	0.47598	9.97238	No
SLV 5	-10983	-10178	132	0.032	1268.7	0.964	0.47598	9.97238	No

Tabella dei coefficienti di sicurezza minimi

Stato limite	Coeff.s.	Comb.	Verifica
PF_SLU	3.432	SLU 77	Si
V_SLU	5.076	SLU 81	Si
PF_SLV	0	SLV 3	No
V_SLV	0	SLV 3	No
PFFP_SLV	1.908	SLV 11	Si
R_SLV	0	SLV 8	No

Maschio 122

Verifiche condotte secondo D.M. 17-01-18 (N.T.C.)

Dati geometrici

X ini.	Y ini.	X fin.	Y fin.	Quota i.	Quota.s	l	Sp.	h netta	h ini.	h fin.	a	a.s.,sx	a.s.,dx
-18.448	-3.254	-18.448	0.055	L4	L5	3.31	0.14	3.55	3.55	3.55			

Caratteristiche del materiale

(Circolare 7 21-01-19 C8.5.I) Muratura in mattoni pieni e malta di calce LC2_Corti

fb	fk	fvk0	fmedio	τ0	fv0	μ	ϕ	fv,lim	E	G	FC
600000			345000	9000	20000	0.58	0.77	32500	320000000	128000000	1.2

Verifica a pressoflessione nel piano secondo D.M. 17-01-18 NTC §7.8.2.2.1 in combinazioni non sismiche, γM = 3

Comb.	Quota	N	M	σ0	Mu	c.s.	Verifica
SLU 78	4.35	-25075	2991.54	54115	13929.07	4.656	Si
SLU 78	6.45	-22280	5492.08	48084	15106.6	2.751	Si
SLU 83	4.35	-25918	3537.6	55935	13439.26	3.799	Si
SLU 83	6.45	-22292	5111.29	48109	15103.11	2.955	Si
SLU 75	4.35	-24589	2869.39	53065	14183.22	4.943	Si
SLU 75	6.45	-21781	5355.19	47007	15244.74	2.847	Si
SLU 81	4.35	-25432	3415.46	54885	13729.37	4.02	Si
SLU 81	6.45	-21793	4974.4	47032	15241.77	3.064	Si
SLU 80	4.35	-24811	2928.8	53546	14069.39	4.804	Si
SLU 80	6.45	-22021	5434.37	47524	15181.15	2.794	Si
SLU 77	4.35	-25636	3581.88	55325	13610.23	3.8	Si
SLU 77	6.45	-22130	5006.87	47760	15150.36	3.026	Si
SLU 73	4.35	-23465	2290.95	50640	14691.16	6.413	Si
SLU 73	6.45	-21123	5484.06	45586	15393.67	2.807	Si
SLU 82	4.35	-24871	2825.11	53675	14038.18	4.969	Si
SLU 82	6.45	-21943	5459.61	47355	15202.43	2.785	Si
SLU 76	4.35	-23951	2413.09	51689	14484.94	6.003	Si
SLU 76	6.45	-21622	5620.95	46663	15284.32	2.719	Si
SLU 84	4.35	-25357	2947.25	54724	13771.99	4.673	Si
SLU 84	6.45	-22442	5596.5	48432	15057.22	2.69	Si

Verifica a pressoflessione nel piano secondo D.M. 17-01-18 NTC §7.8.2.2.1 in combinazioni sismiche, γM = 2

Comb.	Quota	N	M	σ0	Mu	c.s.	Verifica
SLV 9	4.35	-14090	-6976.05	30409	17514.7	2.511	Si
SLV 9	6.45	-19193	8584.21	41422	20995.01	2.446	Si
SLV 8	4.35	-20072	11519.86	43317	21440.44	1.861	Si
SLV 8	6.45	-9923	-2352.61	21415	13543.14	5.757	Si
SLV 7	4.35	-20072	11519.86	43317	21440.44	1.861	Si
SLV 7	6.45	-9923	-2352.61	21415	13543.14	5.757	Si
SLV 16	4.35	-14272	3323.82	30801	17664.6	5.315	Si
SLV 16	6.45	-12601	5744.18	27194	16211.84	2.822	Si
SLV 15	4.35	-14272	3323.82	30801	17664.6	5.315	Si
SLV 15	6.45	-12601	5744.18	27194	16211.84	2.822	Si
SLV 12	4.35	-18031	10571.71	38914	20336.41	1.924	Si
SLV 12	6.45	-9611	-2.75	20742	13205.05	1000	Si
SLV 11	4.35	-18031	10571.71	38914	20336.41	1.924	Si
SLV 11	6.45	-9611	-2.75	20742	13205.05	1000	Si
SLV 13	4.35	-13090	-1940.51	28249	16653.58	8.582	Si
SLV 13	6.45	-15476	8320.27	33398	18609.98	2.237	Si
SLV 14	4.35	-13090	-1940.51	28249	16653.58	8.582	Si
SLV 14	6.45	-15476	8320.27	33398	18609.98	2.237	Si
SLV 10	4.35	-14090	-6976.05	30409	17514.7	2.511	Si
SLV 10	6.45	-19193	8584.21	41422	20995.01	2.446	Si

Verifica a taglio nel piano secondo D.M. 17-01-18 (N.T.C.) §7.8.2.2.2 con rottura per scorrimento in combinazioni non sismiche, γM = 3

Comb.	Quota	N	V par	M	σ0	σN	l'	fvd	Vt scorr.	Vt fess.diag.	Vt,lim	c.s.	Verifica
SLU 2	4.35	-14778	-1910	1079.09		31893	3.3097	9808	4545			2.38	Si
SLU 2	6.45	-13596	-1500	3538.87		29341	3.3097	9468	4387			2.92	Si
SLU 10	4.35	-17187	-1879	1407.15		37091	3.3097	10501	4866			2.59	Si
SLU 10	6.45	-15741	-1469	4236.6		33972	3.3097	10085	4673			3.18	Si
SLU 68	4.35	-21542	-1874	2085.03		46491	3.3097	10833	5020			2.68	Si
SLU 68	6.45	-19476	-1465	4923.22		42032	3.3097	10833	5020			3.43	Si
SLU 34	4.35	-20053	-1877	1932.39		43277	3.3097	10833	5020			2.67	Si
SLU 34	6.45	-18337	-1467	5025.41		39573	3.3097	10832	5019			3.42	Si
SLU 5	4.35	-15264	-1927	1201.23		32942	3.3097	9948	4609			2.39	Si
SLU 5	6.45	-14094	-1517	3675.77		30418	3.3097	9611	4454			2.94	Si
SLU 13	4.35	-17673	-1896	1529.29		38141	3.3097	10641	4931			2.6	Si
SLU 13	6.45	-16240	-1486	4373.5		35048	3.3097	10229	4740			3.19	Si
SLU 47	4.35	-19162	-1893	1681.93		41354	3.3097	10833	5020			2.65	Si
SLU 47	6.45	-17379	-1484	4271.31		37507	3.3097	10556	4891			3.3	Si
SLU 26	4.35	-17644	-1908	1604.34		38079	3.3097	10633	4927			2.58	Si
SLU 26	6.45	-16191	-1498	4327.68		34943	3.3097	10215	4733			3.16	Si
SLU 44	4.35	-18676	-1877	1559.79		40305	3.3097	10833	5020			2.67	Si
SLU 44	6.45	-16880	-1467	4134.42		36430	3.3097	10413	4825			3.29	Si
SLU 23	4.35	-17158	-1891	1482.19		37029	3.3097	10493	4862			2.57	Si
SLU 23	6.45	-15692	-1481	4190.78		33866	3.3097	10071	4667			3.15	Si

Verifica a taglio nel piano secondo D.M. 17-01-18 (N.T.C.) §7.8.2.2.2 con rottura per scorrimento in combinazioni sismiche, γM = 2

Comb.	Quota	N	V par	M	σ0	σN	l'	fvd	Vt scorr.	Vt fess.diag.	Vt,lim	c.s.	Verifica
SLV 4	4.35	-21072	4313	6484.33		45477	3.3097	16250	7530			1.75	Si
SLV 4	6.45	-13641	6192	-2088.67		29438	3.3097	14221	6589			1.06	Si
SLV 8	4.35	-20072	12048	11519.86		44211	3.2428	16250	7377			0.61	No, Vu<V
SLV 8	6.45	-9923	12415	-2352.61		21415	3.3097	12616	5846			0.47	No, Vu<V
SLV 6	4.35	-16131	-11358	-6027.89		34812	3.3097	15296	7087			0.62	No, Vu<V
SLV 6	6.45	-19505	-10564	6234.35		42095	3.3097	16250	7530			0.71	No, Vu<V
SLV 5	4.35	-16131	-11358	-6027.89		34812	3.3097	15296	7087			0.62	No, Vu<V
SLV 5	6.45	-19505	-10564	6234.35		42095	3.3097	16250	7530			0.71	No, Vu<V
SLV 12	4.35	-18031	11656	10571.71		40177	3.2057	16250	7293			0.63	No, Vu<V
SLV 12	6.45	-9611	10856	-2.75		20742	3.3097	12482	5784			0.53	No, Vu<V

Comb.	Quota	N	V par	M	σ0	σN	l'	fvd	Vt scorr.	Vt fess.diag.	Vt,lim	c.s.	Verifica
SLV 3	4.35	-21072	4313	6484.33		45477	3.3097	16250	7530			1.75	Si
SLV 3	6.45	-13641	6192	-2088.67		29438	3.3097	14221	6589			1.06	Si
SLV 7	4.35	-20072	12048	11519.86		44211	3.2428	16250	7377			0.61	No, Vu<V
SLV 7	6.45	-9923	12415	-2352.61		21415	3.3097	12616	5846			0.47	No, Vu<V
SLV 10	4.35	-14090	-11750	-6976.05		30409	3.3097	14415	6679			0.57	No, Vu<V
SLV 10	6.45	-19193	-12123	8584.21		41422	3.3097	16250	7530			0.62	No, Vu<V
SLV 11	4.35	-18031	11656	10571.71		40177	3.2057	16250	7293			0.63	No, Vu<V
SLV 11	6.45	-9611	10856	-2.75		20742	3.3097	12482	5784			0.53	No, Vu<V
SLV 9	4.35	-14090	-11750	-6976.05		30409	3.3097	14415	6679			0.57	No, Vu<V
SLV 9	6.45	-19193	-12123	8584.21		41422	3.3097	16250	7530			0.62	No, Vu<V

Verifica a pressoflessione fuori piano D.M. 17-01-18 (N.T.C.)

quota 6.125 Wa 0.03 denominatore 8 γM = 2

Comb.	fd	Sa	σ0	N	M	Mc	Coeff.s.	Verifica
SLV 12	143750	0.38	24323	-11271	180.12	631.89	3.51	Si
SLV 11	143750	0.38	24323	-11271	180.12	631.89	3.51	Si
SLV 8	143750	0.38	24348	-11282	180.12	632.36	3.51	Si
SLV 7	143750	0.38	24348	-11282	180.12	632.36	3.51	Si
SLV 15	143750	0.38	29924	-13866	180.12	732.9	4.07	Si
SLV 16	143750	0.38	29924	-13866	180.12	732.9	4.07	Si
SLV 3	143750	0.38	30005	-13903	180.12	734.24	4.08	Si
SLV 4	143750	0.38	30005	-13903	180.12	734.24	4.08	Si
SLV 14	143750	0.38	34750	-16102	180.12	806.57	4.48	Si
SLV 13	143750	0.38	34750	-16102	180.12	806.57	4.48	Si

Verifica dei meccanismi locali di collasso con analisi cinematica lineare

forza di aggancio al piano = 0 quota mezzeria = 6.125 Wa = 0.03 Ta = 0.1503

Comb.	N top	N base	V orto	α0	M*	e*	a0*	aLim	Verifica
SLV 1	-11557	-19890	23	0.02	1409	0.952	0.30829	16.27364	No
SLV 2	-11557	-19890	23	0.02	1409	0.952	0.30829	16.27364	No
SLV 6	-13374	-16131	18	0.02	1593.7	0.957	0.31062	16.27364	No
SLV 5	-13374	-16131	18	0.02	1593.7	0.957	0.31062	16.27364	No
SLV 15	-8494	-14272	-23	0.02	1098.2	0.941	0.3145	16.27364	No
SLV 16	-8494	-14272	-23	0.02	1098.2	0.941	0.3145	16.27364	No
SLV 13	-10399	-13090	-15	0.021	1291.4	0.948	0.32001	16.27364	No
SLV 14	-10399	-13090	-15	0.021	1291.4	0.948	0.32001	16.27364	No
SLV 4	-9652	-21072	15	0.021	1215.6	0.945	0.322	16.27364	No
SLV 3	-9652	-21072	15	0.021	1215.6	0.945	0.322	16.27364	No

Tabella dei coefficienti di sicurezza minimi

Stato limite	Coeff.s.	Comb.	Verifica
PF_SLU	2.69	SLU 84	Si
V_SLU	2.379	SLU 2	Si
PF_SLV	1.861	SLV 7	Si
V_SLV	0.471	SLV 7	No
PFFP_SLV	3.508	SLV 11	Si
R_SLV	0.019	SLV 1	No

Maschio 123

Verifiche condotte secondo D.M. 17-01-18 (N.T.C.)

Dati geometrici

X ini.	Y ini.	X fin.	Y fin.	Quota i.	Quota.s	l	Sp.	h netta	h ini.	h fin.	a	a.s.,sx	a.s.,dx
-18.448	0.855	-18.448	1.046	L4	L5	0.191	0.14	3.55	3.55	3.55			

Caratteristiche del materiale

(Circolare 7 21-01-19 C8.5.I) Muratura in mattoni pieni e malta di calce LC2_Corti

fb	fk	fvk0	fmedio	τ0	fv0	μ	ϕ	fv,lim	E	G	FC
600000			345000	9000	20000	0.58	0.77	32500	320000000	128000000	1.2

Verifica a pressoflessione nel piano secondo D.M. 17-01-18 NTC §7.8.2.2.1 in combinazioni non sismiche, γM = 3

Comb.	Quota	N	M	σ0	Mu	c.s.	Verifica
SLU 57	4.35	-2192	-34.91	82012	0	0	No, Rottura per schiacciamento
SLU 57	6.45	-1251	15.92	46818	50.8	3.191	Si
SLU 63	4.35	-2227	-36.94	83299	0	0	No, Rottura per schiacciamento
SLU 63	6.45	-1232	17.64	46088	51.06	2.895	Si
SLU 73	4.35	-2361	-42.16	88327	0	0	No, Rottura per schiacciamento
SLU 73	6.45	-1219	22.07	45607	51.22	2.32	Si
SLU 84	4.35	-2482	-41.82	92841	0	0	No, Rottura per schiacciamento
SLU 84	6.45	-1370	20.16	51260	48.49	2.406	Si
SLU 79	4.35	-2347	-34.43	87794	0	0	No, Rottura per schiacciamento
SLU 79	6.45	-1450	13.25	54241	46.24	3.49	Si
SLU 70	4.35	-2177	-33.57	81462	0	0	No, Rottura per schiacciamento
SLU 70	6.45	-1274	14.65	47671	50.45	3.445	Si
SLU 76	4.35	-2415	-42.59	90337	0	0	No, Rottura per schiacciamento
SLU 76	6.45	-1266	22.01	47349	50.59	2.298	Si
SLU 75	4.35	-2393	-39.36	89544	0	0	No, Rottura per schiacciamento
SLU 75	6.45	-1343	18.5	50248	49.12	2.656	Si

Comb.	Quota	N	M	σ0	Mu	c.s.	Verifica
SLU 78	4.35	-2447	-39.79	91554	0	0	No, Rottura per schiacciamento
SLU 78	6.45	-1390	18.44	51990	47.99	2.603	Si
SLU 74	4.35	-2320	-34.21	86813	0	0	No, Rottura per schiacciamento
SLU 74	6.45	-1426	13.27	53338	46.98	3.539	Si

Verifica a pressoflessione nel piano secondo D.M. 17-01-18 NTC §7.8.2.2.1 in combinazioni sismiche, γM = 2

Comb.	Quota	N	M	σ0	Mu	c.s.	Verifica
SLV 12	4.35	-808	74.57	30231	58.05	0.778	No, M>Mu
SLV 12	6.45	-2102	-56.49	78633	71.52	1.266	Si
SLV 6	4.35	-2264	-118.07	84700	66.31	0.562	No, M>Mu
SLV 6	6.45	187	72.28	0	0	0	No, Trazione
SLV 2	4.35	-2297	-74.35	85955	65.04	0.875	No, M>Mu
SLV 2	6.45	-136	38.35	0	0	0	No, e>l/2
SLV 9	4.35	-1906	-102.43	71302	75.77	0.74	No, M>Mu
SLV 9	6.45	-129	64.93	0	0	0	No, e>l/2
SLV 5	4.35	-2264	-118.07	84700	66.31	0.562	No, M>Mu
SLV 5	6.45	187	72.28	0	0	0	No, Trazione
SLV 11	4.35	-808	74.57	30231	58.05	0.778	No, M>Mu
SLV 11	6.45	-2102	-56.49	78633	71.52	1.266	Si
SLV 8	4.35	-1166	58.94	43628	71.57	1.214	Si
SLV 8	6.45	-1786	-49.14	66828	77.26	1.572	Si
SLV 1	4.35	-2297	-74.35	85955	65.04	0.875	No, M>Mu
SLV 1	6.45	-136	38.35	0	0	0	No, e>l/2
SLV 7	4.35	-1166	58.94	43628	71.57	1.214	Si
SLV 7	6.45	-1786	-49.14	66828	77.26	1.572	Si
SLV 10	4.35	-1906	-102.43	71302	75.77	0.74	No, M>Mu
SLV 10	6.45	-129	64.93	0	0	0	No, e>l/2

Verifica a taglio nel piano secondo D.M. 17-01-18 (N.T.C.) §7.8.2.2.2 con rottura per scorrimento in combinazioni non sismiche, γM = 3

Comb.	Quota	N	V par	M	σ0	σN	I'	fvd	Vt scorr.	Vt fess.diag.	Vt,lim	c.s.	Verifica
SLU 75	4.35	-2393	-77	-39.36		89544	0.1909	10833	290			3.77	Si
SLU 75	6.45	-1343	-65	18.5		50248	0.1909	10833	290			4.44	Si
SLU 31	4.35	-2033	-77	-38.26		76042	0.1909	10833	290			3.75	Si
SLU 31	6.45	-1001	-68	21.11		37448	0.1909	10549	282			4.17	Si
SLU 84	4.35	-2482	-82	-41.82		92841	0.1909	10833	290			3.54	Si
SLU 84	6.45	-1370	-70	20.16		51260	0.1909	10833	290			4.14	Si
SLU 55	4.35	-2160	-75	-37.71		80795	0.1909	10833	290			3.85	Si
SLU 55	6.45	-1127	-65	19.49		42177	0.1909	10833	290			4.45	Si
SLU 34	4.35	-2086	-78	-38.69		78052	0.1909	10833	290			3.72	Si
SLU 34	6.45	-1047	-68	21.05		39190	0.1909	10781	288			4.24	Si
SLU 76	4.35	-2415	-85	-42.59		90337	0.1909	10833	290			3.42	Si
SLU 76	6.45	-1266	-73	22.01		47349	0.1909	10833	290			3.95	Si
SLU 78	4.35	-2447	-77	-39.79		91554	0.1909	10833	290			3.74	Si
SLU 78	6.45	-1390	-66	18.44		51990	0.1909	10833	290			4.41	Si
SLU 80	4.35	-2420	-77	-39.58		90525	0.1909	10833	290			3.76	Si
SLU 80	6.45	-1367	-65	18.47		51151	0.1909	10833	290			4.43	Si
SLU 73	4.35	-2361	-84	-42.16		88327	0.1909	10833	290			3.44	Si
SLU 73	6.45	-1219	-73	22.07		45607	0.1909	10833	290			3.97	Si
SLU 82	4.35	-2428	-81	-41.39		90831	0.1909	10833	290			3.56	Si
SLU 82	6.45	-1324	-70	20.22		49518	0.1909	10833	290			4.16	Si

Verifica a taglio nel piano secondo D.M. 17-01-18 (N.T.C.) §7.8.2.2.2 con rottura per scorrimento in combinazioni sismiche, γM = 2

Comb.	Quota	N	V par	M	σ0	σN	I'	fvd	Vt scorr.	Vt fess.diag.	Vt,lim	c.s.	Verifica
SLV 9	4.35	-1906	-238	-102.43		108782	0.1251	16250	285			1.2	Si
SLV 9	6.45	-129	-189	64.93		0	0	8333	0			0	No, Vu<V
SLV 12	4.35	-808	223	74.57		605418	0.0095	16250	22			0.1	No, Vu<V
SLV 12	6.45	-2102	151	-56.49		78633	0.1909	16250	434			2.88	Si
SLV 8	4.35	-1166	157	58.94		61810	0.1348	16250	307			1.95	Si
SLV 8	6.45	-1786	123	-49.14		66828	0.1909	16250	434			3.52	Si
SLV 2	4.35	-2297	-220	-74.35		86693	0.1893	16250	431			1.96	Si
SLV 2	6.45	-136	-129	38.35		0	0	8333	0			0	No, Vu<V
SLV 10	4.35	-1906	-238	-102.43		108782	0.1251	16250	285			1.2	Si
SLV 10	6.45	-129	-189	64.93		0	0	8333	0			0	No, Vu<V
SLV 1	4.35	-2297	-220	-74.35		86693	0.1893	16250	431			1.96	Si
SLV 1	6.45	-136	-129	38.35		0	0	8333	0			0	No, Vu<V
SLV 7	4.35	-1166	157	58.94		61810	0.1348	16250	307			1.95	Si
SLV 7	6.45	-1786	123	-49.14		66828	0.1909	16250	434			3.52	Si
SLV 11	4.35	-808	223	74.57		605418	0.0095	16250	22			0.1	No, Vu<V
SLV 11	6.45	-2102	151	-56.49		78633	0.1909	16250	434			2.88	Si
SLV 5	4.35	-2264	-304	-118.07		124458	0.1299	16250	296			0.97	No, Vu<V
SLV 5	6.45	187	-216	72.28		0	0	8333	0			0	No, Vu<V
SLV 6	4.35	-2264	-304	-118.07		124458	0.1299	16250	296			0.97	No, Vu<V
SLV 6	6.45	187	-216	72.28		0	0	8333	0			0	No, Vu<V

Verifica a pressoflessione fuori piano D.M. 17-01-18 (N.T.C.)

quota 6.125 Wa 0.03 denominatore 8 γM = 2

Comb.	fd	Sa	σ0	N	M	Mc	Coeff.s.	Verifica
SLV 5	143750	0.38	0	169	10.39	0	0	No, Trazione
SLV 6	143750	0.38	0	169	10.39	0	0	No, Trazione
SLV 9	143750	0.38	5597	-150	10.39	9.99	0.96	No, M>Mu
SLV 10	143750	0.38	5597	-150	10.39	9.99	0.96	No, M>Mu
SLV 1	143750	0.38	5611	-150	10.39	10.02	0.96	No, M>Mu
SLV 2	143750	0.38	5611	-150	10.39	10.02	0.96	No, M>Mu
SLV 4	143750	0.38	27777	-742	10.39	40.16	3.86	Si
SLV 3	143750	0.38	27777	-742	10.39	40.16	3.86	Si
SLV 11	143750	0.38	79483	-2124	10.39	51.98	5	Si
SLV 12	143750	0.38	79483	-2124	10.39	51.98	5	Si

Verifica dei meccanismi locali di collasso con analisi cinematica lineare

forza di aggancio al piano = 0 quota mezzeria = 6.125 Wa = 0.03 Ta = 0.1503

Comb.	N top	N base	V orto	α0	M*	e*	a0*	aLim	Verifica
SLV 4	-896	-1968	0	0.021	104.6	0.962	0.32047	16.27364	No
SLV 3	-896	-1968	0	0.021	104.6	0.962	0.32047	16.27364	No
SLV 1	-793	-2297	0	0.021	94.1	0.958	0.32404	16.27364	No
SLV 2	-793	-2297	0	0.021	94.1	0.958	0.32404	16.27364	No
SLV 7	-875	-1166	0	0.021	102.4	0.961	0.32434	16.27364	No
SLV 8	-875	-1166	0	0.021	102.4	0.961	0.32434	16.27364	No
SLV 11	-753	-808	0	0.022	90.1	0.956	0.32793	16.27364	No
SLV 12	-753	-808	0	0.022	90.1	0.956	0.32793	16.27364	No
SLV 16	-491	-775	0	0.022	63.5	0.941	0.34246	16.27364	No
SLV 15	-491	-775	0	0.022	63.5	0.941	0.34246	16.27364	No

Tabella dei coefficienti di sicurezza minimi

Stato limite	Coeff.s.	Comb.	Verifica
PF_SLU	0	SLU 57	No
V_SLU	3.417	SLU 76	Si
PF_SLV	0	SLV 6	No
V_SLV	0	SLV 1	No
PFFP_SLV	0	SLV 6	No
R_SLV	0.02	SLV 3	No

Maschio 124

Verifiche condotte secondo D.M. 17-01-18 (N.T.C.)

Dati geometrici

X ini.	Y ini.	X fin.	Y fin.	Quota i.	Quota.s	l	Sp.	h netta	h ini.	h fin.	a	a.s.,sx	a.s.,dx
-16.992	-4.784	-16.992	-4.589	L4	L5	0.194	0.3	3.55	3.55	3.55			

Caratteristiche del materiale

(Circolare 7 21-01-19 C8.5.I) Muratura in mattoni pieni e malta di calce LC2_Corti

fb	fk	fvk0	fmedio	τ0	fv0	μ	ϕ	fv,lim	E	G	FC
600000			345000	9000	20000	0.58	0.77	32500	320000000	128000000	1.2

Verifica a pressoflessione nel piano secondo D.M. 17-01-18 NTC §7.8.2.2.1 in combinazioni non sismiche, γM = 3

Comb.	Quota	N	M	σ0	Mu	c.s.	Verifica
SLU 2	4.35	-1676	-2.78	28754	105.37	37.946	Si
SLU 2	7.46	-983	-13.04	16863	75.74	5.809	Si
SLU 65	4.35	-2231	-5.26	38278	114.93	21.862	Si
SLU 65	7.46	-1328	-15.4	22778	92.94	6.034	Si
SLU 55	4.35	-2304	-5.05	39518	115.24	22.835	Si
SLU 55	7.46	-1366	-15.71	23436	94.55	6.017	Si
SLU 68	4.35	-2265	-5.28	38852	115.1	21.79	Si
SLU 68	7.46	-1358	-15.69	23299	94.22	6.005	Si
SLU 23	4.35	-1809	-4.97	31026	108.8	21.896	Si
SLU 23	7.46	-1070	-13.29	18358	80.55	6.062	Si
SLU 26	4.35	-1842	-4.99	31600	109.55	21.935	Si
SLU 26	7.46	-1101	-13.58	18879	82.15	6.051	Si
SLU 5	4.35	-1710	-2.8	29328	106.31	37.935	Si
SLU 5	7.46	-1013	-13.33	17384	77.45	5.812	Si
SLU 52	4.35	-2270	-5.02	38944	115.12	22.927	Si
SLU 52	7.46	-1336	-15.43	22915	93.28	6.047	Si
SLU 47	4.35	-2132	-3.09	36580	114.15	36.938	Si
SLU 47	7.46	-1271	-15.44	21804	90.44	5.857	Si
SLU 44	4.35	-2099	-3.06	36006	113.79	37.128	Si
SLU 44	7.46	-1241	-15.15	21283	89.05	5.877	Si

Verifica a pressoflessione nel piano secondo D.M. 17-01-18 NTC §7.8.2.2.1 in combinazioni sismiche, γM = 2

Comb.	Quota	N	M	σ0	Mu	c.s.	Verifica
SLV 1	4.35	-3202	-64.31	54932	171.26	2.663	Si
SLV 1	7.46	-1011	-238.85	0	0	0	No, e>l/2
SLV 5	4.35	-925	-296.21	0	0	0	No, e>l/2
SLV 5	7.46	-1979	-20.99	33945	138.85	6.614	Si
SLV 10	4.35	243	-314.55	0	0	0	No, Trazione
SLV 10	7.46	-2170	128.88	37220	146.6	1.137	Si
SLV 4	4.35	-3986	116.13	68378	170.56	1.469	Si
SLV 4	7.46	-373	-275.71	0	0	0	No, e>l/2
SLV 7	4.35	-3538	305.25	60688	173.01	0.567	No, M>Mu
SLV 7	7.46	149	-143.85	0	0	0	No, Trazione
SLV 2	4.35	-3202	-64.31	54932	171.26	2.663	Si
SLV 2	7.46	-1011	-238.85	0	0	0	No, e>l/2
SLV 9	4.35	243	-314.55	0	0	0	No, Trazione
SLV 9	7.46	-2170	128.88	37220	146.6	1.137	Si
SLV 6	4.35	-925	-296.21	0	0	0	No, e>l/2
SLV 6	7.46	-1979	-20.99	33945	138.85	6.614	Si
SLV 8	4.35	-3538	305.25	60688	173.01	0.567	No, M>Mu
SLV 8	7.46	149	-143.85	0	0	0	No, Trazione
SLV 3	4.35	-3986	116.13	68378	170.56	1.469	Si
SLV 3	7.46	-373	-275.71	0	0	0	No, e>l/2

Verifica a taglio nel piano secondo D.M. 17-01-18 (N.T.C.) §7.8.2.2.2 con rottura per scorrimento in combinazioni non sismiche, γM = 3

Comb.	Quota	N	V par	M	σ0	σN	l'	fvd	Vt scorr.	Vt fess.diag.	Vt,lim	c.s.	Verifica
SLU 50	4.35	-2050	-10	-3.8		35171	0.1943	10245	597			62.21	Si
SLU 50	7.46	-1277	-27	-10.03		21905	0.1943	8476	494			18.03	Si
SLU 47	4.35	-2132	-22	-3.09		36580	0.1943	10433	608			28.21	Si

Comb.	Quota	N	V par	M	σ0	σN	I'	fvd	Vt scorr.	Vt fess.diag.	Vt,lim	c.s.	Verifica
SLU 47	7.46	-1271	-26	-15.44		21804	0.1943	8463	493			18.77	Si
SLU 49	4.35	-2112	-18	-4.28		36233	0.1943	10387	605			33.15	Si
SLU 49	7.46	-1293	-23	-13.3		22186	0.1943	8514	496			21.26	Si
SLU 46	4.35	-2079	-18	-4.25		35659	0.1943	10310	601			33.53	Si
SLU 46	7.46	-1263	-23	-13.01		21665	0.1943	8444	492			21.05	Si
SLU 43	4.35	-1983	-9	-3.75		34022	0.1943	10092	588			65.97	Si
SLU 43	7.46	-1216	-27	-9.45		20863	0.1943	8337	486			17.69	Si
SLU 44	4.35	-2099	-21	-3.06		36006	0.1943	10356	604			28.46	Si
SLU 44	7.46	-1241	-26	-15.15		21283	0.1943	8393	489			18.59	Si
SLU 58	4.35	-2222	-10	-5.76		38109	0.1943	10637	620			59.47	Si
SLU 58	7.46	-1372	-22	-10.3		23537	0.1943	8694	507			23.15	Si
SLU 51	4.35	-2120	-17	-3.39		36361	0.1943	10404	606			35.72	Si
SLU 51	7.46	-1292	-27	-13.45		22157	0.1943	8510	496			18.58	Si
SLU 48	4.35	-2043	-11	-4.69		35043	0.1943	10228	596			54.77	Si
SLU 48	7.46	-1279	-24	-9.88		21934	0.1943	8480	494			20.56	Si
SLU 45	4.35	-2009	-11	-4.67		34469	0.1943	10151	592			56.12	Si
SLU 45	7.46	-1248	-24	-9.59		21413	0.1943	8411	490			20.35	Si

Verifica a taglio nel piano secondo D.M. 17-01-18 (N.T.C.) §7.8.2.2.2 con rottura per scorrimento in combinazioni sismiche, γM = 2

Comb.	Quota	N	V par	M	σ0	σN	I'	fvd	Vt scorr.	Vt fess.diag.	Vt,lim	c.s.	Verifica
SLV 8	4.35	-3538	198	305.25		361351	0.0326	16250	159			0.8	No, Vu<V
SLV 8	7.46	149	-1586	-143.85		0	0	8333	0			0	No, Vu<V
SLV 4	4.35	-3986	-131	116.13		68378	0.1943	16250	947			7.25	Si
SLV 4	7.46	-373	-2495	-275.71		0	0	8333	0			0	No, Vu<V
SLV 9	4.35	243	-214	-314.55		0	0	8333	0			0	No, Vu<V
SLV 9	7.46	-2170	1555	128.88		63846	0.1133	16250	552			0.36	No, Vu<V
SLV 6	4.35	-925	-335	-296.21		0	0	8333	0			0	No, Vu<V
SLV 6	7.46	-1979	230	-20.99		33945	0.1943	15122	882			3.83	Si
SLV 5	4.35	-925	-335	-296.21		0	0	8333	0			0	No, Vu<V
SLV 5	7.46	-1979	230	-20.99		33945	0.1943	15122	882			3.83	Si
SLV 10	4.35	243	-214	-314.55		0	0	8333	0			0	No, Vu<V
SLV 10	7.46	-2170	1555	128.88		63846	0.1133	16250	552			0.36	No, Vu<V
SLV 7	4.35	-3538	198	305.25		361351	0.0326	16250	159			0.8	No, Vu<V
SLV 7	7.46	149	-1586	-143.85		0	0	8333	0			0	No, Vu<V
SLV 1	4.35	-3202	-291	-64.31		54932	0.1943	16250	947			3.26	Si
SLV 1	7.46	-1011	-1951	-238.85		0	0	8333	0			0	No, Vu<V
SLV 2	4.35	-3202	-291	-64.31		54932	0.1943	16250	947			3.26	Si
SLV 2	7.46	-1011	-1951	-238.85		0	0	8333	0			0	No, Vu<V
SLV 3	4.35	-3986	-131	116.13		68378	0.1943	16250	947			7.25	Si
SLV 3	7.46	-373	-2495	-275.71		0	0	8333	0			0	No, Vu<V

Verifica a pressoflessione fuori piano D.M. 17-01-18 (N.T.C.)

quota 6.125 Wa 0.05 denominatore 8 γM = 2

Comb.	fd	Sa	σ0	N	M	Mc	Coeff.s.	Verifica
SLV 11	143750	0.38	5181	-302	20.69	43.38	2.1	Si
SLV 12	143750	0.38	5181	-302	20.69	43.38	2.1	Si
SLV 8	143750	0.38	6951	-405	20.69	57.33	2.77	Si
SLV 7	143750	0.38	6951	-405	20.69	57.33	2.77	Si
SLV 15	143750	0.38	16943	-988	20.69	127.61	6.17	Si
SLV 16	143750	0.38	16943	-988	20.69	127.61	6.17	Si
SLV 4	143750	0.38	22846	-1332	20.69	162.42	7.85	Si
SLV 3	143750	0.38	22846	-1332	20.69	162.42	7.85	Si
SLV 14	143750	0.38	28796	-1679	20.69	192.46	9.3	Si
SLV 13	143750	0.38	28796	-1679	20.69	192.46	9.3	Si

Verifica dei meccanismi locali di collasso con analisi cinematica lineare

forza di aggancio al piano = 0 quota mezzeria = 6.125 Wa = 0.05 Ta = 0.0702

Comb.	N top	N base	V orto	α0	M*	e*	a0*	aLim	Verifica
SLV 10	-799	243	1	0	0	0	0	9.21471	No, Trazione
SLV 14	-867	691	3	0	0	0	0	10.36036	No, Trazione
SLV 13	-867	691	3	0	0	0	0	10.36036	No, Trazione
SLV 9	-799	243	1	0	0	0	0	9.21471	No, Trazione
SLV 15	-924	-92	3	0.047	123.5	0.935	0.72902	10.36036	No
SLV 16	-924	-92	3	0.047	123.5	0.935	0.72902	10.36036	No
SLV 3	-918	-3986	-2	0.047	123	0.934	0.73829	10.36036	No
SLV 4	-918	-3986	-2	0.047	123	0.934	0.73829	10.36036	No
SLV 2	-862	-3202	-2	0.048	117.2	0.932	0.74714	10.36036	No
SLV 1	-862	-3202	-2	0.048	117.2	0.932	0.74714	10.36036	No

Tabella dei coefficienti di sicurezza minimi

Stato limite	Coeff.s.	Comb.	Verifica
PF_SLU	5.809	SLU 2	Si
V_SLU	17.686	SLU 43	Si
PF_SLV	0	SLV 14	No
V_SLV	0	SLV 1	No
PFFP_SLV	2.097	SLV 11	Si
R_SLV	0	SLV 14	No

Maschio 125

Verifiche condotte secondo D.M. 17-01-18 (N.T.C.)

Dati geometrici

X ini.	Y ini.	X fin.	Y fin.	Quota i.	Quota.s	l	Sp.	h netta	h ini.	h fin.	a	a.s.,sx	a.s.,dx
-16.992	-3.499	-16.992	-3.254	L4	L5	0.245	0.3	3.55	3.55	3.55			

Caratteristiche del materiale

(Circolare 7 21-01-19 C8.5.I) Muratura in mattoni pieni e malta di calce LC2_Corti

fb	fk	fvk0	fmedio	τ0	fv0	μ	ϕ	fv,lim	E	G	FC
600000			345000	9000	20000	0.58	0.77	32500	320000000	128000000	1.2

Verifica a pressoflessione nel piano secondo D.M. 17-01-18 NTC §7.8.2.2.1 in combinazioni non sismiche, γM = 3

Comb.	Quota	N	M	σ0	Mu	c.s.	Verifica
SLU 74	4.35	-2847	-67.09	38730	182.94	2.727	Si
SLU 74	7.46	-1748	29.63	23780	151.62	5.116	Si
SLU 41	4.35	-2496	-61.69	33959	178.31	2.89	Si
SLU 41	7.46	-1517	27.36	20636	138.75	5.072	Si
SLU 83	4.35	-2939	-69.04	39984	183.32	2.655	Si
SLU 83	7.46	-1797	31	24443	154.06	4.969	Si
SLU 32	4.35	-2404	-59.74	32705	176.26	2.95	Si
SLU 32	7.46	-1468	25.99	19973	135.75	5.224	Si
SLU 35	4.35	-2454	-60.68	33391	177.43	2.924	Si
SLU 35	7.46	-1509	26.53	20527	138.26	5.211	Si
SLU 79	4.35	-2866	-65.83	38988	183.04	2.78	Si
SLU 79	7.46	-1768	29.56	24057	152.65	5.163	Si
SLU 37	4.35	-2423	-58.49	32963	176.71	3.021	Si
SLU 37	7.46	-1488	25.92	20250	137.02	5.287	Si
SLU 81	4.35	-2889	-68.1	39298	183.15	2.689	Si
SLU 81	7.46	-1756	30.46	23889	152.03	4.991	Si
SLU 39	4.35	-2446	-60.75	33272	177.23	2.917	Si
SLU 39	7.46	-1476	26.81	20081	136.25	5.082	Si
SLU 77	4.35	-2897	-68.02	39416	183.19	2.693	Si
SLU 77	7.46	-1789	30.18	24334	153.67	5.092	Si

Verifica a pressoflessione nel piano secondo D.M. 17-01-18 NTC §7.8.2.2.1 in combinazioni sismiche, γM = 2

Comb.	Quota	N	M	σ0	Mu	c.s.	Verifica
SLV 4	4.35	-824	222.93	0	0	0	No, e>l/2
SLV 4	7.46	-373	-182.31	0	0	0	No, e>l/2
SLV 15	4.35	-1571	-56.03	21376	158.81	2.835	Si
SLV 15	7.46	-1548	203.67	0	0	0	No, e>l/2
SLV 11	4.35	400	334.86	0	0	0	No, Trazione
SLV 11	7.46	-608	49.53	8273	69.46	1.402	Si
SLV 1	4.35	-2289	-28.43	31142	208.96	7.35	Si
SLV 1	7.46	-827	-165.98	0	0	0	No, e>l/2
SLV 16	4.35	-1571	-56.03	21376	158.81	2.835	Si
SLV 16	7.46	-1548	203.67	0	0	0	No, e>l/2
SLV 3	4.35	-824	222.93	0	0	0	No, e>l/2
SLV 3	7.46	-373	-182.31	0	0	0	No, e>l/2
SLV 8	4.35	624	418.55	0	0	0	No, Trazione
SLV 8	7.46	-256	-66.26	0	0	0	No, e>l/2
SLV 7	4.35	624	418.55	0	0	0	No, Trazione
SLV 7	7.46	-256	-66.26	0	0	0	No, e>l/2
SLV 12	4.35	400	334.86	0	0	0	No, Trazione
SLV 12	7.46	-608	49.53	8273	69.46	1.402	Si
SLV 2	4.35	-2289	-28.43	31142	208.96	7.35	Si
SLV 2	7.46	-827	-165.98	0	0	0	No, e>l/2

Verifica a taglio nel piano secondo D.M. 17-01-18 (N.T.C.) §7.8.2.2.2 con rottura per scorrimento in combinazioni non sismiche, γM = 3

Comb.	Quota	N	V par	M	σ0	σN	l'	fvd	Vt scorr.	Vt fess.diag.	Vt,lim	c.s.	Verifica
SLU 36	4.35	-2365	2	-34.52		32181	0.245	9846	724			294.81	Si
SLU 36	7.46	-1557	59	25.69		21186	0.245	8380	616			10.39	Si
SLU 34	4.35	-2224	32	-13.95		30259	0.245	9590	705			21.76	Si
SLU 34	7.46	-1529	57	23.98		20795	0.245	8328	612			10.81	Si
SLU 82	4.35	-2800	-1	-41.94		38087	0.245	10634	782			1000	Si
SLU 82	7.46	-1804	60	29.62		24548	0.245	8829	649			10.81	Si
SLU 75	4.35	-2758	2	-40.93		37520	0.245	10558	776			393.3	Si
SLU 75	7.46	-1796	61	28.8		24439	0.245	8814	648			10.58	Si
SLU 84	4.35	-2850	-1	-42.87		38774	0.245	10725	788			898.72	Si
SLU 84	7.46	-1845	61	30.16		25103	0.245	8903	654			10.79	Si
SLU 31	4.35	-2174	33	-13.01		29573	0.245	9499	698			21.37	Si
SLU 31	7.46	-1488	56	23.43		20241	0.245	8254	607			10.83	Si
SLU 33	4.35	-2315	3	-33.58		31495	0.245	9755	717			262.83	Si
SLU 33	7.46	-1517	59	25.15		20632	0.245	8306	611			10.41	Si
SLU 78	4.35	-2808	2	-41.86		38206	0.245	10650	783			460.45	Si
SLU 78	7.46	-1837	62	29.34		24994	0.245	8888	653			10.57	Si
SLU 40	4.35	-2357	0	-34.59		32062	0.245	9831	723			1000	Si
SLU 40	7.46	-1525	57	25.97		20741	0.245	8321	612			10.64	Si
SLU 42	4.35	-2407	0	-35.53		32749	0.245	9922	729			1000	Si
SLU 42	7.46	-1565	58	26.52		21295	0.245	8395	617			10.62	Si

Verifica a taglio nel piano secondo D.M. 17-01-18 (N.T.C.) §7.8.2.2.2 con rottura per scorrimento in combinazioni sismiche, γM = 2

Comb.	Quota	N	V par	M	σ0	σN	l'	fvd	Vt scorr.	Vt fess.diag.	Vt,lim	c.s.	Verifica
SLV 12	4.35	400	831	334.86		0	0	8333	0			0	No, Vu<V
SLV 12	7.46	-608	-954	49.53		16458	0.1232	11625	430			0.45	No, Vu<V
SLV 7	4.35	624	1068	418.55		0	0	8333	0			0	No, Vu<V
SLV 7	7.46	-256	-1833	-66.26		0	0	8333	0			0	No, Vu<V
SLV 3	4.35	-824	666	222.93		0	0	8333	0			0	No, Vu<V
SLV 3	7.46	-373	-1862	-182.31		0	0	8333	0			0	No, Vu<V
SLV 8	4.35	624	1068	418.55		0	0	8333	0			0	No, Vu<V
SLV 8	7.46	-256	-1833	-66.26		0	0	8333	0			0	No, Vu<V
SLV 16	4.35	-1571	-125	-56.03		21376	0.245	12609	927			7.4	Si
SLV 16	7.46	-1548	1068	203.67		0	0	8333	0			0	No, Vu<V
SLV 15	4.35	-1571	-125	-56.03		21376	0.245	12609	927			7.4	Si
SLV 15	7.46	-1548	1068	203.67		0	0	8333	0			0	No, Vu<V
SLV 1	4.35	-2289	84	-28.43		31142	0.245	14562	1070			12.81	Si
SLV 1	7.46	-827	-1008	-165.98		0	0	8333	0			0	No, Vu<V

Comb.	Quota	N	V par	M	σ0	σN	l'	fvd	Vt scorr.	Vt fess.diag.	Vt,lim	c.s.	Verifica
SLV 11	4.35	400	831	334.86		0	0	8333	0			0	No, Vu<V
SLV 11	7.46	-608	-954	49.53		16458	0.1232	11625	430			0.45	No, Vu<V
SLV 2	4.35	-2289	84	-28.43		31142	0.245	14562	1070			12.81	Si
SLV 2	7.46	-827	-1008	-165.98		0	0	8333	0			0	No, Vu<V
SLV 4	4.35	-824	666	222.93		0	0	8333	0			0	No, Vu<V
SLV 4	7.46	-373	-1862	-182.31		0	0	8333	0			0	No, Vu<V

Verifica a pressoflessione fuori piano D.M. 17-01-18 (N.T.C.)

quota 6.125 Wa 0.05 denominatore 8 γM = 2

Comb.	fd	Sa	σ0	N	M	Mc	Coeff.s.	Verifica
SLV 9	143750	0.38	7801	-573	26.09	80.52	3.09	Si
SLV 10	143750	0.38	7801	-573	26.09	80.52	3.09	Si
SLV 14	143750	0.38	12136	-892	26.09	120.52	4.62	Si
SLV 13	143750	0.38	12136	-892	26.09	120.52	4.62	Si
SLV 6	143750	0.38	13317	-979	26.09	130.82	5.01	Si
SLV 5	143750	0.38	13317	-979	26.09	130.82	5.01	Si
SLV 16	143750	0.38	21369	-1571	26.09	194.4	7.45	Si
SLV 15	143750	0.38	21369	-1571	26.09	194.4	7.45	Si
SLV 1	143750	0.38	30523	-2244	26.09	252.47	9.68	Si
SLV 2	143750	0.38	30523	-2244	26.09	252.47	9.68	Si

Verifica dei meccanismi locali di collasso con analisi cinematica lineare

forza di aggancio al piano = 0 quota mezzeria = 6.125 Wa = 0.05 Ta = 0.0702

Comb.	N top	N base	V orto	α0	M*	e*	a0*	aLim	Verifica
SLV 11	632	400	16	0	0	0	0	9.21471	No, Trazione
SLV 3	167	-824	0	0	0	0	0	10.36036	No, Trazione
SLV 7	996	624	14	0	0	0	0	9.21471	No, Trazione
SLV 4	167	-824	0	0	0	0	0	10.36036	No, Trazione
SLV 8	996	624	14	0	0	0	0	9.21471	No, Trazione
SLV 12	632	400	16	0	0	0	0	9.21471	No, Trazione
SLV 6	-2588	-4260	-18	0.039	300.3	0.963	0.59537	9.21471	No
SLV 5	-2588	-4260	-18	0.039	300.3	0.963	0.59537	9.21471	No
SLV 2	-908	-2289	-9	0.043	129.9	0.925	0.67192	10.36036	No
SLV 1	-908	-2289	-9	0.043	129.9	0.925	0.67192	10.36036	No

Tabella dei coefficienti di sicurezza minimi

Stato limite	Coeff.s.	Comb.	Verifica
PF_SLU	2.655	SLU 83	Si
V_SLU	10.394	SLU 36	Si
PF_SLV	0	SLV 12	No
V_SLV	0	SLV 1	No
PFFP_SLV	3.086	SLV 9	Si
R_SLV	0	SLV 12	No

Maschio 126

Verifiche condotte secondo D.M. 17-01-18 (N.T.C.)

Dati geometrici

X ini.	Y ini.	X fin.	Y fin.	Quota i.	Quota.s	l	Sp.	h netta	h ini.	h fin.	a	a.s.,sx	a.s.,dx
-13.753	-3.254	-15.3	-3.254	L4	L5	1.547	0.28	3.55	3.55	3.55			

Caratteristiche del materiale

(Circolare 7 21-01-19 C8.5.I) Muratura in mattoni pieni e malta di calce LC2_Corti

fb	fk	fvk0	fmedio	τ0	fv0	μ	ϕ	fv,lim	E	G	FC
600000			345000	9000	20000	0.58	0.77	32500	320000000	128000000	1.2

Verifica a pressoflessione nel piano secondo D.M. 17-01-18 NTC §7.8.2.2.1 in combinazioni non sismiche, γM = 3

Comb.	Quota	N	M	σ0	Mu	c.s.	Verifica
SLU 82	4.35	-14420	-990.87	33293	6594.82	6.656	Si
SLU 82	6.45	-16176	1648.66	37347	6775.22	4.11	Si
SLU 75	4.35	-14461	-915.97	33387	6600.56	7.206	Si
SLU 75	6.45	-15916	1569.59	36747	6757.05	4.305	Si
SLU 77	4.35	-14880	-843.4	34354	6655.09	7.891	Si
SLU 77	6.45	-16247	1559.52	37510	6779.63	4.347	Si
SLU 73	4.35	-13985	-958.58	32288	6529.25	6.811	Si
SLU 73	6.45	-15470	1555.18	35717	6718.96	4.32	Si
SLU 81	4.35	-14529	-940.47	33543	6609.88	7.028	Si
SLU 81	6.45	-16219	1646.93	37447	6777.95	4.115	Si
SLU 78	4.35	-14771	-893.8	34103	6641.7	7.431	Si
SLU 78	6.45	-16203	1561.24	37410	6776.95	4.341	Si
SLU 84	4.35	-14730	-968.71	34009	6636.52	6.851	Si
SLU 84	6.45	-16463	1640.31	38010	6791.86	4.141	Si
SLU 74	4.35	-14569	-865.57	33637	6615.43	7.643	Si
SLU 74	6.45	-15959	1567.87	36847	6760.27	4.312	Si
SLU 76	4.35	-14295	-936.41	33005	6576.86	7.023	Si
SLU 76	6.45	-15757	1546.83	36380	6744.48	4.36	Si
SLU 83	4.35	-14839	-918.31	34259	6650.11	7.242	Si
SLU 83	6.45	-16507	1638.58	38110	6794.04	4.146	Si

Verifica a pressoflessione nel piano secondo D.M. 17-01-18 NTC §7.8.2.2.1 in combinazioni sismiche, γM = 2

Comb.	Quota	N	M	σ0	Mu	c.s.	Verifica
SLV 4	4.35	-11966	3224.45	27626	7162.42	2.221	Si
SLV 4	6.45	-5334	-2670.38	12316	3710.01	1.389	Si
SLV 3	4.35	-11966	3224.45	27626	7162.42	2.221	Si
SLV 3	6.45	-5334	-2670.38	12316	3710.01	1.389	Si

Comb.	Quota	N	M	σ0	Mu	c.s.	Verifica
SLV 1	4.35	-15585	3699.99	35983	8504.54	2.299	Si
SLV 1	6.45	-8079	-2423.82	18652	5294.69	2.184	Si
SLV 12	4.35	-3245	-2560.52	0	0	0	No, e>l/2
SLV 12	6.45	-7577	1701.8	17493	5021.18	2.951	Si
SLV 16	4.35	-5046	-4821.97	0	0	0	No, e>l/2
SLV 16	6.45	-13710	4498.6	31653	7856.93	1.747	Si
SLV 13	4.35	-8665	-4346.43	20007	5604.91	1.29	Si
SLV 13	6.45	-16454	4745.16	37989	8769.76	1.848	Si
SLV 2	4.35	-15585	3699.99	35983	8504.54	2.299	Si
SLV 2	6.45	-8079	-2423.82	18652	5294.69	2.184	Si
SLV 14	4.35	-8665	-4346.43	20007	5604.91	1.29	Si
SLV 14	6.45	-16454	4745.16	37989	8769.76	1.848	Si
SLV 11	4.35	-3245	-2560.52	0	0	0	No, e>l/2
SLV 11	6.45	-7577	1701.8	17493	5021.18	2.951	Si
SLV 15	4.35	-5046	-4821.97	0	0	0	No, e>l/2
SLV 15	6.45	-13710	4498.6	31653	7856.93	1.747	Si

Verifica a taglio nel piano secondo D.M. 17-01-18 (N.T.C.) §7.8.2.2.2 con rottura per scorrimento in combinazioni non sismiche, γM = 3

Comb.	Quota	N	V par	M	σ0	σN	l'	fvd	Vt scorr.	Vt fess.diag.	Vt,lim	c.s.	Verifica
SLU 75	4.35	-14461	-2230	-915.97		33387	1.5469	10007	4334			1.94	Si
SLU 75	6.45	-15916	-2360	1569.59		36747	1.5469	10455	4528			1.92	Si
SLU 81	4.35	-14529	-2313	-940.47		33543	1.5469	10028	4343			1.88	Si
SLU 81	6.45	-16219	-2505	1646.93		37447	1.5469	10548	4569			1.82	Si
SLU 74	4.35	-14569	-2187	-865.57		33637	1.5469	10041	4349			1.99	Si
SLU 74	6.45	-15959	-2352	1567.87		36847	1.5469	10468	4534			1.93	Si
SLU 42	4.35	-12044	-2088	-886.57		27806	1.5469	9263	4012			1.92	Si
SLU 42	6.45	-13910	-2220	1445.38		32115	1.5469	9838	4261			1.92	Si
SLU 40	4.35	-11734	-2109	-908.73		27090	1.5469	9168	3971			1.88	Si
SLU 40	6.45	-13623	-2250	1453.73		31452	1.5469	9749	4223			1.88	Si
SLU 73	4.35	-13985	-2251	-958.58		32288	1.5469	9861	4271			1.9	Si
SLU 73	6.45	-15470	-2361	1555.18		35717	1.5469	10318	4469			1.89	Si
SLU 84	4.35	-14730	-2335	-968.71		34009	1.5469	10090	4370			1.87	Si
SLU 84	6.45	-16463	-2483	1640.31		38010	1.5469	10624	4601			1.85	Si
SLU 82	4.35	-14420	-2356	-990.87		33293	1.5469	9995	4329			1.84	Si
SLU 82	6.45	-16176	-2513	1648.66		37347	1.5469	10535	4563			1.82	Si
SLU 39	4.35	-11842	-2066	-858.33		27341	1.5469	9201	3985			1.93	Si
SLU 39	6.45	-13666	-2242	1452.01		31552	1.5469	9762	4228			1.89	Si
SLU 83	4.35	-14839	-2291	-918.31		34259	1.5469	10123	4385			1.91	Si
SLU 83	6.45	-16507	-2475	1638.58		38110	1.5469	10637	4607			1.86	Si

Verifica a taglio nel piano secondo D.M. 17-01-18 (N.T.C.) §7.8.2.2.2 con rottura per scorrimento in combinazioni sismiche, γM = 2

Comb.	Quota	N	V par	M	σ0	σN	l'	fvd	Vt scorr.	Vt fess.diag.	Vt,lim	c.s.	Verifica
SLV 3	4.35	-11966	4868	3224.45		28265	1.5119	13986	5921			1.22	Si
SLV 3	6.45	-5334	4453	-2670.38		23274	0.8186	12988	2977			0.67	No, Vu<V
SLV 4	4.35	-11966	4868	3224.45		28265	1.5119	13986	5921			1.22	Si
SLV 4	6.45	-5334	4453	-2670.38		23274	0.8186	12988	2977			0.67	No, Vu<V
SLV 2	4.35	-15585	5744	3699.99		35983	1.5469	15530	6726			1.17	Si
SLV 2	6.45	-8079	4054	-2423.82		20315	1.4203	12396	4930			1.22	Si
SLV 13	4.35	-8665	-7751	-4346.43		37945	0.8156	15922	3636			0.47	No, Vu<V
SLV 13	6.45	-16454	-7538	4745.16		40383	1.4552	16250	6621			0.88	No, Vu<V
SLV 11	4.35	-3245	-4926	-2560.52		0	0	8333	0			0	No, Vu<V
SLV 11	6.45	-7577	-2617	1701.8		17493	1.5469	11832	5125			1.96	Si
SLV 16	4.35	-5046	-8628	-4821.97		0	0	8333	0			0	No, Vu<V
SLV 16	6.45	-13710	-7139	4498.6		36650	1.336	15663	5859			0.82	No, Vu<V
SLV 1	4.35	-15585	5744	3699.99		35983	1.5469	15530	6726			1.17	Si
SLV 1	6.45	-8079	4054	-2423.82		20315	1.4203	12396	4930			1.22	Si
SLV 15	4.35	-5046	-8628	-4821.97		0	0	8333	0			0	No, Vu<V
SLV 15	6.45	-13710	-7139	4498.6		36650	1.336	15663	5859			0.82	No, Vu<V
SLV 14	4.35	-8665	-7751	-4346.43		37945	0.8156	15922	3636			0.47	No, Vu<V
SLV 14	6.45	-16454	-7538	4745.16		40383	1.4552	16250	6621			0.88	No, Vu<V
SLV 12	4.35	-3245	-4926	-2560.52		0	0	8333	0			0	No, Vu<V
SLV 12	6.45	-7577	-2617	1701.8		17493	1.5469	11832	5125			1.96	Si

Verifica a pressoflessione fuori piano D.M. 17-01-18 (N.T.C.)

quota 6.125 Wa 0.05 denominatore 8 γM = 2

Comb.	fd	Sa	σ0	N	M	Mc	Coeff.s.	Verifica
SLV 8	143750	0.38	12385	-5364	157.39	674.88	4.29	Si
SLV 7	143750	0.38	12385	-5364	157.39	674.88	4.29	Si
SLV 3	143750	0.38	12845	-5563	157.39	697	4.43	Si
SLV 4	143750	0.38	12845	-5563	157.39	697	4.43	Si
SLV 12	143750	0.38	18274	-7915	157.39	942.38	5.99	Si
SLV 11	143750	0.38	18274	-7915	157.39	942.38	5.99	Si
SLV 1	143750	0.38	19128	-8285	157.39	978.32	6.22	Si
SLV 2	143750	0.38	19128	-8285	157.39	978.32	6.22	Si
SLV 15	143750	0.38	32475	-14066	157.39	1445.86	9.19	Si
SLV 16	143750	0.38	32475	-14066	157.39	1445.86	9.19	Si

Verifica dei meccanismi locali di collasso con analisi cinematica lineare

forza di aggancio al piano = 0 quota mezzeria = 6.125 Wa = 0.05 Ta = 0.0752

Comb.	N top	N base	V orto	α0	M*	e*	a0*	aLim	Verifica
SLV 12	-4632	-3245	-225	0.011	692.9	0.919	0.17539	9.97238	No
SLV 11	-4632	-3245	-225	0.011	692.9	0.919	0.17539	9.97238	No
SLV 7	-5333	-5321	-179	0.021	763.3	0.924	0.3294	9.97238	No
SLV 8	-5333	-5321	-179	0.021	763.3	0.924	0.3294	9.97238	No
SLV 16	-5746	-5046	-137	0.028	804.9	0.927	0.43601	11.26714	No
SLV 15	-5746	-5046	-137	0.028	804.9	0.927	0.43601	11.26714	No
SLV 6	-10854	-17386	227	0.025	1322.2	0.952	0.38738	9.97238	No
SLV 5	-10854	-17386	227	0.025	1322.2	0.952	0.38738	9.97238	No
SLV 1	-9740	-15585	139	0.032	1209.1	0.948	0.4883	11.26714	No
SLV 2	-9740	-15585	139	0.032	1209.1	0.948	0.4883	11.26714	No

Tabella dei coefficienti di sicurezza minimi

Stato limite	Coeff.s.	Comb.	Verifica
PF_SLU	4.11	SLU 82	Si
V_SLU	1.816	SLU 82	Si
PF_SLV	0	SLV 11	No
V_SLV	0	SLV 11	No
PFFP_SLV	4.288	SLV 7	Si
R_SLV	0.018	SLV 11	No

Maschio 127

Verifiche condotte secondo D.M. 17-01-18 (N.T.C.)

Dati geometrici

X ini.	Y ini.	X fin.	Y fin.	Quota i.	Quota.s	l	Sp.	h netta	h ini.	h fin.	a	a.s.,sx	a.s.,dx
-16.45	-4.784	-16.992	-4.784	L4	L5	0.542	0.3	3.55	3.55	3.55			

Caratteristiche del materiale

(Circolare 7 21-01-19 C8.5.I) Muratura in mattoni pieni e malta di calce LC2_Corti

fb	fk	fvk0	fmedio	τ0	fv0	μ	ϕ	fv,lim	E	G	FC
600000			345000	9000	20000	0.58	0.77	32500	320000000	128000000	1.2

Verifica a pressoflessione nel piano secondo D.M. 17-01-18 NTC §7.8.2.2.1 in combinazioni non sismiche, γM = 3

Comb.	Quota	N	M	σ0	Mu	c.s.	Verifica
SLU 68	4.35	-6472	3.85	39797	897.25	232.941	Si
SLU 68	7.46	-3770	376.23	23182	731.09	1.943	Si
SLU 84	4.35	-6959	48.24	42791	895.42	18.561	Si
SLU 84	7.46	-3989	394.92	24530	755.72	1.914	Si
SLU 76	4.35	-6879	31.27	42300	896.38	28.668	Si
SLU 76	7.46	-4022	399.06	24732	759.22	1.903	Si
SLU 63	4.35	-6597	29.35	40562	897.7	30.581	Si
SLU 63	7.46	-3771	374.95	23185	731.15	1.95	Si
SLU 73	4.35	-6771	33.46	41637	897.27	26.818	Si
SLU 73	7.46	-3947	391.43	24268	751.08	1.919	Si
SLU 80	4.35	-6893	34.3	42382	896.24	26.128	Si
SLU 80	7.46	-3957	392.76	24330	752.18	1.915	Si
SLU 75	4.35	-6795	38.63	41782	897.12	23.221	Si
SLU 75	7.46	-3876	384.4	23830	743.18	1.933	Si
SLU 82	4.35	-6851	50.43	42128	896.66	17.78	Si
SLU 82	7.46	-3914	387.29	24067	747.47	1.93	Si
SLU 78	4.35	-6903	36.44	42445	896.12	24.59	Si
SLU 78	7.46	-3951	392.03	24294	751.54	1.917	Si
SLU 55	4.35	-6517	12.38	40071	897.48	72.487	Si
SLU 55	7.46	-3803	379.1	23386	734.95	1.939	Si

Verifica a pressoflessione nel piano secondo D.M. 17-01-18 NTC §7.8.2.2.1 in combinazioni sismiche, γM = 2

Comb.	Quota	N	M	σ0	Mu	c.s.	Verifica
SLV 12	4.35	-3738	-973.52	22985	822.64	0.845	No, M>Mu
SLV 12	7.46	-6900	609.92	42427	1220.86	2.002	Si
SLV 7	4.35	-3097	-589.38	19040	708.55	1.202	Si
SLV 7	7.46	-6664	585.28	40976	1200.57	2.051	Si
SLV 5	4.35	-5763	1010.27	35435	1109.04	1.098	Si
SLV 5	7.46	1709	-92.15	0	0	0	No, Trazione
SLV 10	4.35	-6404	626.13	39380	1176.47	1.879	Si
SLV 10	7.46	1473	-67.51	0	0	0	No, Trazione
SLV 2	4.35	-4081	898.56	25094	879.01	0.978	No, M>Mu
SLV 2	7.46	-946	116.2	5819	244.29	2.102	Si
SLV 11	4.35	-3738	-973.52	22985	822.64	0.845	No, M>Mu
SLV 11	7.46	-6900	609.92	42427	1220.86	2.002	Si
SLV 9	4.35	-6404	626.13	39380	1176.47	1.879	Si
SLV 9	7.46	1473	-67.51	0	0	0	No, Trazione
SLV 8	4.35	-3097	-589.38	19040	708.55	1.202	Si
SLV 8	7.46	-6664	585.28	40976	1200.57	2.051	Si
SLV 1	4.35	-4081	898.56	25094	879.01	0.978	No, M>Mu
SLV 1	7.46	-946	116.2	5819	244.29	2.102	Si
SLV 6	4.35	-5763	1010.27	35435	1109.04	1.098	Si
SLV 6	7.46	1709	-92.15	0	0	0	No, Trazione

Verifica a taglio nel piano secondo D.M. 17-01-18 (N.T.C.) §7.8.2.2.2 con rottura per scorrimento in combinazioni non sismiche, γM = 3

Comb.	Quota	N	V par	M	σ0	σN	l'	fvd	Vt scorr.	Vt fess.diag.	Vt,lim	c.s.	Verifica
SLU 18	4.35	-5112	52	44.31		31433	0.5421	9747	1585			30.47	Si
SLU 18	7.46	-2821	-98	279.28		18217	0.5162	7985	1236			12.65	Si
SLU 79	4.35	-6751	54	42.14		41509	0.5421	10833	1762			32.83	Si
SLU 79	7.46	-3746	-110	371.86		24228	0.5153	8786	1358			12.37	Si
SLU 62	4.35	-6455	51	37.19		39690	0.5421	10833	1762			34.67	Si
SLU 62	7.46	-3560	-109	354.06		23050	0.5148	8629	1333			12.19	Si
SLU 39	4.35	-5475	67	63.2		33662	0.5421	10044	1633			24.51	Si
SLU 39	7.46	-3040	-111	299.24		19567	0.5178	8164	1268			11.39	Si
SLU 77	4.35	-6761	53	44.28		41573	0.5421	10833	1762			32.95	Si
SLU 77	7.46	-3740	-110	371.13		24185	0.5155	8780	1358			12.32	Si
SLU 60	4.35	-6347	52	39.38		39027	0.5421	10759	1750			33.36	Si
SLU 60	7.46	-3484	-111	346.43		22557	0.5149	8563	1323			11.88	Si
SLU 41	4.35	-5582	65	61.01		34325	0.5421	10132	1648			25.34	Si
SLU 41	7.46	-3115	-109	306.87		20060	0.5176	8230	1278			11.69	Si
SLU 74	4.35	-6653	55	46.47		40909	0.5421	10833	1762			31.98	Si
SLU 74	7.46	-3664	-112	363.51		23692	0.5156	8714	1348			12.02	Si
SLU 81	4.35	-6709	67	58.27		41255	0.5421	10833	1762			26.26	Si

Comb.	Quota	N	V par	M	σ0	σN	l'	fvd	Vt scorr.	Vt fess.diag.	Vt,lim	c.s.	Verifica
SLU 81	7.46	-3703	-125	366.39		23906	0.5163	8743	1354			10.84	Si
SLU 83	4.35	-6817	65	56.08		41919	0.5421	10833	1762			26.92	Si
SLU 83	7.46	-3778	-123	374.02		24399	0.5162	8809	1364			11.1	Si

Verifica a taglio nel piano secondo D.M. 17-01-18 (N.T.C.) §7.8.2.2.2 con rottura per scorrimento in combinazioni sismiche, γM = 2

Comb.	Quota	N	V par	M	σ0	σN	l'	fvd	Vt scorr.	Vt fess.diag.	Vt,lim	c.s.	Verifica
SLV 1	4.35	-4081	937	898.56		89125	0.1526	16250	744			0.79	No, Vu<V
SLV 1	7.46	-946	-1347	116.2		7092	0.4448	9752	1301			0.97	No, Vu<V
SLV 6	4.35	-5763	864	1010.27		66876	0.2872	16250	1400			1.62	Si
SLV 6	7.46	1709	-1076	-92.15		0	0	8333	0			0	No, Vu<V
SLV 2	4.35	-4081	937	898.56		89125	0.1526	16250	744			0.79	No, Vu<V
SLV 2	7.46	-946	-1347	116.2		7092	0.4448	9752	1301			0.97	No, Vu<V
SLV 12	4.35	-3738	-806	-973.52		390790	0.0319	16250	155			0.19	No, Vu<V
SLV 12	7.46	-6900	932	609.92		42427	0.5421	16250	2643			2.84	Si
SLV 9	4.35	-6404	430	626.13		41065	0.5199	16250	2534			5.89	Si
SLV 9	7.46	1473	-434	-67.51		0	0	8333	0			0	No, Vu<V
SLV 10	4.35	-6404	430	626.13		41065	0.5199	16250	2534			5.89	Si
SLV 10	7.46	1473	-434	-67.51		0	0	8333	0			0	No, Vu<V
SLV 15	4.35	-5420	-879	-861.8		53746	0.3361	16250	1639			1.86	Si
SLV 15	7.46	-4244	1203	401.57		26728	0.5293	13679	2172			1.81	Si
SLV 16	4.35	-5420	-879	-861.8		53746	0.3361	16250	1639			1.86	Si
SLV 16	7.46	-4244	1203	401.57		26728	0.5293	13679	2172			1.81	Si
SLV 5	4.35	-5763	864	1010.27		66876	0.2872	16250	1400			1.62	Si
SLV 5	7.46	1709	-1076	-92.15		0	0	8333	0			0	No, Vu<V
SLV 11	4.35	-3738	-806	-973.52		390790	0.0319	16250	155			0.19	No, Vu<V
SLV 11	7.46	-6900	932	609.92		42427	0.5421	16250	2643			2.84	Si

Verifica a pressoflessione fuori piano D.M. 17-01-18 (N.T.C.)

quota 6.125 Wa 0.05 denominatore 8 γM = 2

Comb.	fd	Sa	σ0	N	M	Mc	Coeff.s.	Verifica
SLV 16	143750	0.38	18910	-3075	57.72	389.92	6.76	Si
SLV 15	143750	0.38	18910	-3075	57.72	389.92	6.76	Si
SLV 14	143750	0.38	20372	-3313	57.72	414.11	7.17	Si
SLV 13	143750	0.38	20372	-3313	57.72	414.11	7.17	Si
SLV 11	143750	0.38	21472	-3492	57.72	431.77	7.48	Si
SLV 12	143750	0.38	21472	-3492	57.72	431.77	7.48	Si
SLV 7	143750	0.38	25130	-4087	57.72	486.96	8.44	Si
SLV 8	143750	0.38	25130	-4087	57.72	486.96	8.44	Si
SLV 9	143750	0.38	26344	-4284	57.72	504.1	8.73	Si
SLV 10	143750	0.38	26344	-4284	57.72	504.1	8.73	Si

Verifica dei meccanismi locali di collasso con analisi cinematica lineare

forza di aggancio al piano = 0 quota mezzeria = 6.125 Wa = 0.05 Ta = 0.0702

Comb.	N top	N base	V orto	α0	M*	e*	a0*	aLim	Verifica
SLV 9	324	-6404	45	0	0	0	0	9.21471	No, Trazione
SLV 6	409	-5763	47	0	0	0	0	9.21471	No, Trazione
SLV 10	324	-6404	45	0	0	0	0	9.21471	No, Trazione
SLV 5	409	-5763	47	0	0	0	0	9.21471	No, Trazione
SLV 11	-6524	-3738	-49	0.038	745.5	0.967	0.57681	9.21471	No
SLV 12	-6524	-3738	-49	0.038	745.5	0.967	0.57681	9.21471	No
SLV 16	-4226	-5420	-19	0.043	511.8	0.954	0.65327	10.36036	No
SLV 15	-4226	-5420	-19	0.043	511.8	0.954	0.65327	10.36036	No
SLV 8	-6439	-3097	-47	0.039	736.8	0.967	0.58136	9.21471	No
SLV 7	-6439	-3097	-47	0.039	736.8	0.967	0.58136	9.21471	No

Tabella dei coefficienti di sicurezza minimi

Stato limite	Coeff.s.	Comb.	Verifica
PF_SLU	1.903	SLU 76	Si
V_SLU	10.841	SLU 81	Si
PF_SLV	0	SLV 10	No
V_SLV	0	SLV 5	No
PFFP_SLV	6.755	SLV 15	Si
R_SLV	0	SLV 10	No

Maschio 128

Verifiche condotte secondo D.M. 17-01-18 (N.T.C.)

Dati geometrici

X ini.	Y ini.	X fin.	Y fin.	Quota i.	Quota.s	l	Sp.	h netta	h ini.	h fin.	a	a.s.,sx	a.s.,dx
-13.753	-4.784	-14.61	-4.784	L4	L5	0.858	0.3	3.55	3.55	3.55			

Caratteristiche del materiale

(Circolare 7 21-01-19 C8.5.I) Muratura in mattoni pieni e malta di calce LC2_Corti

fb	fk	fvk0	fmedio	τ0	fv0	μ	ϕ	fv,lim	E	G	FC
600000			345000	9000	20000	0.58	0.77	32500	320000000	128000000	1.2

Verifica a pressoflessione nel piano secondo D.M. 17-01-18 NTC §7.8.2.2.1 in combinazioni non sismiche, γM = 3

Comb.	Quota	N	M	σ0	Mu	c.s.	Verifica
SLU 83	4.35	-8624	-149.01	33520	2176.07	14.604	Si
SLU 83	7.46	-5727	-241.65	22259	1784.46	7.385	Si
SLU 74	4.35	-8440	-133.32	32805	2161.42	16.212	Si
SLU 74	7.46	-5572	-237.02	21658	1753.9	7.4	Si
SLU 56	4.35	-8172	-97.41	31764	2137.61	21.944	Si
SLU 56	7.46	-5331	-230.87	20721	1704.32	7.382	Si
SLU 58	4.35	-8150	-97.52	31681	2135.57	21.899	Si

Comb.	Quota	N	M	σ0	Mu	c.s.	Verifica
SLU 58	7.46	-5318	-230.15	20671	1701.62	7.394	Si
SLU 77	4.35	-8553	-131.78	33246	2170.62	16.472	Si
SLU 77	7.46	-5672	-241.81	22049	1773.89	7.336	Si
SLU 80	4.35	-8552	-131.38	33243	2170.56	16.522	Si
SLU 80	7.46	-5685	-240.97	22099	1776.43	7.372	Si
SLU 79	4.35	-8532	-131.88	33163	2168.92	16.446	Si
SLU 79	7.46	-5660	-241.09	21999	1771.37	7.347	Si
SLU 78	4.35	-8574	-131.27	33327	2172.25	16.548	Si
SLU 78	7.46	-5698	-241.69	22149	1778.94	7.36	Si
SLU 71	4.35	-8052	-95.53	31299	2126.04	22.255	Si
SLU 71	7.46	-5269	-228.61	20480	1691.21	7.398	Si
SLU 69	4.35	-8074	-95.42	31383	2128.16	22.303	Si
SLU 69	7.46	-5282	-229.33	20530	1693.93	7.386	Si

Verifica a pressoflessione nel piano secondo D.M. 17-01-18 NTC §7.8.2.2.1 in combinazioni sismiche, γM = 2

Comb.	Quota	N	M	σ0	Mu	c.s.	Verifica
SLV 4	4.35	-6649	1232.87	25845	2247.98	1.823	Si
SLV 4	7.46	-2256	-338.6	8769	897.86	2.652	Si
SLV 11	4.35	-1712	-589.63	6653	693.91	1.177	Si
SLV 11	7.46	-2028	-0.98	7885	813.65	829.039	Si
SLV 3	4.35	-6649	1232.87	25845	2247.98	1.823	Si
SLV 3	7.46	-2256	-338.6	8769	897.86	2.652	Si
SLV 16	4.35	-3191	-1454.91	0	0	0	No, e>l/2
SLV 16	7.46	-4287	64.27	16664	1587.52	24.702	Si
SLV 14	4.35	-5496	-1390.25	21364	1944.66	1.399	Si
SLV 14	7.46	-5614	-0.67	21820	1977.18	1000	Si
SLV 13	4.35	-5496	-1390.25	21364	1944.66	1.399	Si
SLV 13	7.46	-5614	-0.67	21820	1977.18	1000	Si
SLV 12	4.35	-1712	-589.63	6653	693.91	1.177	Si
SLV 12	7.46	-2028	-0.98	7885	813.65	829.039	Si
SLV 1	4.35	-8955	1297.53	34807	2745.83	2.116	Si
SLV 1	7.46	-3582	-403.53	13925	1361.03	3.373	Si
SLV 2	4.35	-8955	1297.53	34807	2745.83	2.116	Si
SLV 2	7.46	-3582	-403.53	13925	1361.03	3.373	Si
SLV 15	4.35	-3191	-1454.91	0	0	0	No, e>l/2
SLV 15	7.46	-4287	64.27	16664	1587.52	24.702	Si

Verifica a taglio nel piano secondo D.M. 17-01-18 (N.T.C.) §7.8.2.2.2 con rottura per scorrimento in combinazioni non sismiche, γM = 3

Comb.	Quota	N	V par	M	σ0	σN	I'	fvd	Vt scorr.	Vt fess.diag.	Vt,lim	c.s.	Verifica
SLU 76	4.35	-8453	-312	-132.58		32856	0.8576	9936	2556			8.2	Si
SLU 76	7.46	-5602	471	-236.09		21774	0.8576	8459	2176			4.62	Si
SLU 75	4.35	-8460	-311	-132.81		32886	0.8576	9940	2557			8.22	Si
SLU 75	7.46	-5598	457	-236.89		21758	0.8576	8457	2176			4.77	Si
SLU 80	4.35	-8552	-306	-131.38		33243	0.8576	9988	2570			8.39	Si
SLU 80	7.46	-5685	466	-240.97		22099	0.8576	8502	2187			4.7	Si
SLU 83	4.35	-8624	-337	-149.01		33520	0.8576	10025	2579			7.65	Si
SLU 83	7.46	-5727	461	-241.65		22259	0.8576	8523	2193			4.76	Si
SLU 84	4.35	-8644	-339	-148.5		33601	0.8576	10036	2582			7.63	Si
SLU 84	7.46	-5752	480	-241.52		22359	0.8576	8537	2196			4.57	Si
SLU 82	4.35	-8531	-343	-150.04		33160	0.8576	9977	2567			7.49	Si
SLU 82	7.46	-5652	473	-236.72		21968	0.8576	8485	2183			4.62	Si
SLU 79	4.35	-8532	-305	-131.88		33163	0.8576	9977	2567			8.42	Si
SLU 79	7.46	-5660	446	-241.09		21999	0.8576	8489	2184			4.89	Si
SLU 73	4.35	-8339	-316	-134.12		32415	0.8576	9878	2541			8.05	Si
SLU 73	7.46	-5501	463	-231.29		21383	0.8576	8407	2163			4.67	Si
SLU 78	4.35	-8574	-307	-131.27		33327	0.8576	9999	2572			8.38	Si
SLU 78	7.46	-5698	464	-241.69		22149	0.8576	8509	2189			4.72	Si
SLU 81	4.35	-8510	-341	-150.55		33079	0.8576	9966	2564			7.51	Si
SLU 81	7.46	-5626	453	-236.85		21868	0.8576	8471	2179			4.81	Si

Verifica a taglio nel piano secondo D.M. 17-01-18 (N.T.C.) §7.8.2.2.2 con rottura per scorrimento in combinazioni sismiche, γM = 2

Comb.	Quota	N	V par	M	σ0	σN	I'	fvd	Vt scorr.	Vt fess.diag.	Vt,lim	c.s.	Verifica
SLV 14	4.35	-5496	-3844	-1390.25		34731	0.5275	15279	2418			0.63	No, Vu<V
SLV 14	7.46	-5614	676	-0.67		21820	0.8576	12697	3267			4.83	Si
SLV 4	4.35	-6649	3454	1232.87		30358	0.7301	14405	3155			0.91	No, Vu<V
SLV 4	7.46	-2256	-83	-338.6		8994	0.8361	10132	2541			30.72	Si
SLV 13	4.35	-5496	-3844	-1390.25		34731	0.5275	15279	2418			0.63	No, Vu<V
SLV 13	7.46	-5614	676	-0.67		21820	0.8576	12697	3267			4.83	Si
SLV 12	4.35	-1712	-1935	-589.63		22566	0.2528	12846	974			0.5	No, Vu<V
SLV 12	7.46	-2028	1041	-0.98		7885	0.8576	9910	2550			2.45	Si
SLV 16	4.35	-3191	-4199	-1454.91		0	0	8333	0			0	No, Vu<V
SLV 16	7.46	-4287	1023	64.27		16664	0.8576	11666	3001			2.93	Si
SLV 11	4.35	-1712	-1935	-589.63		22566	0.2528	12846	974			0.5	No, Vu<V
SLV 11	7.46	-2028	1041	-0.98		7885	0.8576	9910	2550			2.45	Si
SLV 1	4.35	-8955	3809	1297.53		35049	0.8516	15343	3920			1.03	Si
SLV 1	7.46	-3582	-430	-403.53		13925	0.8576	11118	2860			6.66	Si
SLV 2	4.35	-8955	3809	1297.53		35049	0.8516	15343	3920			1.03	Si
SLV 2	7.46	-3582	-430	-403.53		13925	0.8576	11118	2860			6.66	Si
SLV 15	4.35	-3191	-4199	-1454.91		0	0	8333	0			0	No, Vu<V
SLV 15	7.46	-4287	1023	64.27		16664	0.8576	11666	3001			2.93	Si
SLV 3	4.35	-6649	3454	1232.87		30358	0.7301	14405	3155			0.91	No, Vu<V
SLV 3	7.46	-2256	-83	-338.6		8994	0.8361	10132	2541			30.72	Si

Verifica a pressoflessione fuori piano D.M. 17-01-18 (N.T.C.)

quota 6.125 Wa 0.05 denominatore 8 γM = 2

Comb.	fd	Sa	σ0	N	M	Mc	Coeff.s.	Verifica
SLV 8	143750	0.38	7887	-2029	91.31	284.71	3.12	Si
SLV 7	143750	0.38	7887	-2029	91.31	284.71	3.12	Si
SLV 4	143750	0.38	10813	-2782	91.31	380.36	4.17	Si
SLV 3	143750	0.38	10813	-2782	91.31	380.36	4.17	Si

Comb.	fd	Sa	σ0	N	M	Mc	Coeff.s.	Verifica
SLV 12	143750	0.38	12673	-3260	91.31	438.33	4.8	Si
SLV 11	143750	0.38	12673	-3260	91.31	438.33	4.8	Si
SLV 2	143750	0.38	18108	-4659	91.31	595.23	6.52	Si
SLV 1	143750	0.38	18108	-4659	91.31	595.23	6.52	Si
SLV 15	143750	0.38	26767	-6886	91.31	806.66	8.83	Si
SLV 16	143750	0.38	26767	-6886	91.31	806.66	8.83	Si

Verifica dei meccanismi locali di collasso con analisi cinematica lineare

forza di aggancio al piano = 0 quota mezzeria = 6.125 Wa = 0.05 Ta = 0.0702

Comb.	N top	N base	V orto	α0	M*	e*	a0*	aLim	Verifica
SLV 4	-1147	-6649	-47	0.036	253.6	0.892	0.59065	10.36036	No
SLV 3	-1147	-6649	-47	0.036	253.6	0.892	0.59065	10.36036	No
SLV 14	-6361	-5496	47	0.04	776.6	0.952	0.61823	10.36036	No
SLV 13	-6361	-5496	47	0.04	776.6	0.952	0.61823	10.36036	No
SLV 15	-5118	-3191	27	0.044	650.5	0.944	0.67003	10.36036	No
SLV 16	-5118	-3191	27	0.044	650.5	0.944	0.67003	10.36036	No
SLV 7	-1087	-2749	-44	0.037	248	0.891	0.60812	9.21471	No
SLV 8	-1087	-2749	-44	0.037	248	0.891	0.60812	9.21471	No
SLV 9	-6420	-9396	45	0.041	782.7	0.952	0.62317	9.21471	No
SLV 10	-6420	-9396	45	0.041	782.7	0.952	0.62317	9.21471	No

Tabella dei coefficienti di sicurezza minimi

Stato limite	Coeff.s.	Comb.	Verifica
PF_SLU	7.336	SLU 77	Si
V_SLU	4.574	SLU 84	Si
PF_SLV	0	SLV 15	No
V_SLV	0	SLV 15	No
PFFP_SLV	3.118	SLV 7	Si
R_SLV	0.057	SLV 3	No

Maschio 129

Verifiche condotte secondo D.M. 17-01-18 (N.T.C.)

Dati geometrici

X ini.	Y ini.	X fin.	Y fin.	Quota i.	Quota.s	l	Sp.	h netta	h ini.	h fin.	a	a.s.,sx	a.s.,dx
-15.038	2.203	-15.038	6.536	L4	L5	4.332	0.14	3.55	3.55	3.55			

Caratteristiche del materiale

(Circolare 7 21-01-19 C8.5.I) Muratura in mattoni pieni e malta di calce LC2_Corti

fb	fk	fvk0	fmedio	τ0	fv0	μ	ϕ	fv,lim	E	G	FC
600000			345000	9000	20000	0.58	0.77	32500	320000000	128000000	1.2

Verifica a pressoflessione nel piano secondo D.M. 17-01-18 NTC §7.8.2.2.1 in combinazioni non sismiche, γM = 3

Comb.	Quota	N	M	σ0	Mu	c.s.	Verifica
SLU 39	4.35	-24764	-1217.26	40829	26756.32	21.981	Si
SLU 39	7.9	-16356	-768.56	26967	23701.45	30.839	Si
SLU 83	4.35	-29079	-885.18	47943	25917.18	29.279	Si
SLU 83	7.9	-19216	-356.34	31682	25436.25	71.382	Si
SLU 31	4.35	-23494	-1078.79	38734	26692.29	24.743	Si
SLU 31	7.9	-15506	-651.62	25565	23047.7	35.37	Si
SLU 42	4.35	-24916	-895.65	41079	26754.5	29.871	Si
SLU 42	7.9	-16514	-400.75	27227	23815.78	59.428	Si
SLU 73	4.35	-27653	-1058.06	45592	26375.12	24.928	Si
SLU 73	7.9	-18206	-600.76	30017	24905.67	41.457	Si
SLU 41	4.35	-24920	-905.91	41085	26754.43	29.533	Si
SLU 41	7.9	-16516	-407.2	27230	23817.35	58.491	Si
SLU 40	4.35	-24760	-1207	40823	26756.34	22.168	Si
SLU 40	7.9	-16354	-762.11	26963	23699.85	31.098	Si
SLU 84	4.35	-29075	-874.92	47936	25918.63	29.624	Si
SLU 84	7.9	-19214	-349.9	31678	25435.19	72.694	Si
SLU 82	4.35	-28920	-1186.27	47680	25977.21	21.898	Si
SLU 82	7.9	-19054	-711.26	31415	25357.12	35.651	Si
SLU 81	4.35	-28923	-1196.53	47686	25975.82	21.709	Si
SLU 81	7.9	-19056	-717.7	31418	25358.2	35.333	Si

Verifica a pressoflessione nel piano secondo D.M. 17-01-18 NTC §7.8.2.2.1 in combinazioni sismiche, γM = 2

Comb.	Quota	N	M	σ0	Mu	c.s.	Verifica
SLV 7	4.35	-14215	12624.12	23436	24886.09	1.971	Si
SLV 7	7.9	-9342	4561.77	15402	17685.83	3.877	Si
SLV 11	4.35	-6276	18396.67	0	0	0	No, e>l/2
SLV 11	7.9	-5420	6521.17	8935	10881.23	1.669	Si
SLV 9	4.35	-24114	-13823.46	39757	35239.29	2.549	Si
SLV 9	7.9	-15834	-5143.12	26105	26971	5.244	Si
SLV 6	4.35	-32053	-19596.01	52846	39403.18	2.011	Si
SLV 6	7.9	-19756	-7102.52	32572	31387.57	4.419	Si
SLV 15	4.35	-3257	13854.27	0	0	0	No, e>l/2
SLV 15	7.9	-4488	4724.65	7400	9133.41	1.933	Si
SLV 12	4.35	-6276	18396.67	0	0	0	No, e>l/2
SLV 12	7.9	-5420	6521.17	8935	10881.23	1.669	Si
SLV 5	4.35	-32053	-19596.01	52846	39403.18	2.011	Si
SLV 5	7.9	-19756	-7102.52	32572	31387.57	4.419	Si
SLV 8	4.35	-14215	12624.12	23436	24886.09	1.971	Si
SLV 8	7.9	-9342	4561.77	15402	17685.83	3.877	Si
SLV 10	4.35	-24114	-13823.46	39757	35239.29	2.549	Si
SLV 10	7.9	-15834	-5143.12	26105	26971	5.244	Si
SLV 16	4.35	-3257	13854.27	0	0	0	No, e>l/2

Comb.	Quota	N	M	σ0	Mu	c.s.	Verifica
SLV 16	7.9	-4488	4724.65	7400	9133.41	1.933	Si

Verifica a taglio nel piano secondo D.M. 17-01-18 (N.T.C.) §7.8.2.2.2 con rottura per scorrimento in combinazioni non sismiche, γM = 3

Comb.	Quota	N	V par	M	σ0	σN	I'	fvd	Vt scorr.	Vt fess.diag.	Vt,lim	c.s.	Verifica
SLU 9	4.35	-17738	-25	231.78		29244	4.3324	9455	5735			227.27	Si
SLU 9	7.9	-11737	-22	587.17		19350	4.3324	8136	4935			229.11	Si
SLU 31	4.35	-23494	23	-1078.79		38734	4.3324	10720	6502			283.12	Si
SLU 31	7.9	-15506	27	-651.62		25565	4.3324	8964	5437			201.77	Si
SLU 8	4.35	-17741	-28	221.52		29250	4.3324	9456	5735			203.23	Si
SLU 8	7.9	-11739	-25	580.72		19354	4.3324	8136	4935			200.92	Si
SLU 39	4.35	-24764	21	-1217.26		40829	4.3324	10833	6571			312.84	Si
SLU 39	7.9	-16356	25	-768.56		26967	4.3324	9151	5550			221.23	Si
SLU 73	4.35	-27653	23	-1058.06		45592	4.3324	10833	6571			283.9	Si
SLU 73	7.9	-18206	28	-600.76		30017	4.3324	9558	5797			207.68	Si
SLU 40	4.35	-24760	24	-1207		40823	4.3324	10833	6571			273.88	Si
SLU 40	7.9	-16354	28	-762.11		26963	4.3324	9151	5550			197.43	Si
SLU 6	4.35	-18151	-26	124.31		29925	4.3324	9546	5790			221.11	Si
SLU 6	7.9	-12099	-23	508.56		19947	4.3324	8215	4983			221.33	Si
SLU 50	4.35	-21901	-28	242.25		36108	4.3324	10370	6290			224.3	Si
SLU 50	7.9	-14439	-24	631.58		23806	4.3324	8730	5295			224.41	Si
SLU 81	4.35	-28923	21	-1196.53		47686	4.3324	10833	6571			310.2	Si
SLU 81	7.9	-19056	26	-717.7		31418	4.3324	9745	5910			226.84	Si
SLU 82	4.35	-28920	24	-1186.27		47680	4.3324	10833	6571			271.86	Si
SLU 82	7.9	-19054	29	-711.26		31415	4.3324	9744	5910			203.24	Si

Verifica a taglio nel piano secondo D.M. 17-01-18 (N.T.C.) §7.8.2.2.2 con rottura per scorrimento in combinazioni sismiche, γM = 2

Comb.	Quota	N	V par	M	σ0	σN	I'	fvd	Vt scorr.	Vt fess.diag.	Vt,lim	c.s.	Verifica
SLV 9	4.35	-24114	-9117	-13823.46		39757	4.3324	16250	9856			1.08	Si
SLV 9	7.9	-15834	-8348	-5143.12		26105	4.3324	13554	8221			0.98	No, Vu<V
SLV 7	4.35	-14215	9136	12624.12		26481	3.8343	13629	7316			0.8	No, Vu<V
SLV 7	7.9	-9342	8373	4561.77		15402	4.3324	11414	6923			0.83	No, Vu<V
SLV 10	4.35	-24114	-9117	-13823.46		39757	4.3324	16250	9856			1.08	Si
SLV 10	7.9	-15834	-8348	-5143.12		26105	4.3324	13554	8221			0.98	No, Vu<V
SLV 11	4.35	-6276	8876	18396.67		0	0	8333	0			0	No, Vu<V
SLV 11	7.9	-5420	7872	6521.17		13401	2.8888	11013	4454			0.57	No, Vu<V
SLV 5	4.35	-32053	-8857	-19596.01		52846	4.3324	16250	9856			1.11	Si
SLV 5	7.9	-19756	-7846	-7102.52		32572	4.3324	14848	9006			1.15	Si
SLV 15	4.35	-3257	2274	13854.27		0	0	8333	0			0	No, Vu<V
SLV 15	7.9	-4488	1609	4724.65		9597	3.3405	10253	4795			2.98	Si
SLV 8	4.35	-14215	9136	12624.12		26481	3.8343	13629	7316			0.8	No, Vu<V
SLV 8	7.9	-9342	8373	4561.77		15402	4.3324	11414	6923			0.83	No, Vu<V
SLV 12	4.35	-6276	8876	18396.67		0	0	8333	0			0	No, Vu<V
SLV 12	7.9	-5420	7872	6521.17		13401	2.8888	11013	4454			0.57	No, Vu<V
SLV 16	4.35	-3257	2274	13854.27		0	0	8333	0			0	No, Vu<V
SLV 16	7.9	-4488	1609	4724.65		9597	3.3405	10253	4795			2.98	Si
SLV 6	4.35	-32053	-8857	-19596.01		52846	4.3324	16250	9856			1.11	Si
SLV 6	7.9	-19756	-7846	-7102.52		32572	4.3324	14848	9006			1.15	Si

Verifica a pressoflessione fuori piano D.M. 17-01-18 (N.T.C.)

quota 6.125 Wa 0.03 denominatore 8 γM = 2

Comb.	fd	Sa	σ0	N	M	Mc	Coeff.s.	Verifica
SLV 16	143750	0.38	7190	-4361	235.78	287.31	1.22	Si
SLV 15	143750	0.38	7190	-4361	235.78	287.31	1.22	Si
SLV 12	143750	0.38	10492	-6364	235.78	407.23	1.73	Si
SLV 11	143750	0.38	10492	-6364	235.78	407.23	1.73	Si
SLV 14	143750	0.38	13599	-8248	235.78	513.13	2.18	Si
SLV 13	143750	0.38	13599	-8248	235.78	513.13	2.18	Si
SLV 7	143750	0.38	19732	-11968	235.78	702.49	2.98	Si
SLV 8	143750	0.38	19732	-11968	235.78	702.49	2.98	Si
SLV 10	143750	0.38	31857	-19322	235.78	999.92	4.24	Si
SLV 9	143750	0.38	31857	-19322	235.78	999.92	4.24	Si

Verifica dei meccanismi locali di collasso con analisi cinematica lineare

forza di aggancio al piano = 0 quota mezzeria = 6.125 Wa = 0.03 Ta = 0.1503

Comb.	N top	N base	V orto	α0	M*	e*	a0*	aLim	Verifica
SLV 1	-20688	-35071	2	0.021	2409.6	0.962	0.32212	16.27364	No
SLV 2	-20688	-35071	2	0.021	2409.6	0.962	0.32212	16.27364	No
SLV 6	-19756	-32053	0	0.021	2314.8	0.961	0.3246	16.27364	No
SLV 5	-19756	-32053	0	0.021	2314.8	0.961	0.3246	16.27364	No
SLV 4	-17563	-29720	2	0.022	2091.8	0.957	0.32762	16.27364	No
SLV 3	-17563	-29720	2	0.022	2091.8	0.957	0.32762	16.27364	No
SLV 10	-15834	-24114	-1	0.022	1916	0.954	0.33273	16.27364	No
SLV 9	-15834	-24114	-1	0.022	1916	0.954	0.33273	16.27364	No
SLV 7	-9342	-14215	1	0.023	1257.9	0.934	0.35831	16.27364	No
SLV 8	-9342	-14215	1	0.023	1257.9	0.934	0.35831	16.27364	No

Tabella dei coefficienti di sicurezza minimi

Stato limite	Coeff.s.	Comb.	Verifica
PF_SLU	21.709	SLU 81	Si
V_SLU	197.427	SLU 40	Si
PF_SLV	0	SLV 11	No
V_SLV	0	SLV 11	No
PFFP_SLV	1.219	SLV 15	Si
R_SLV	0.02	SLV 1	No

Maschio 130

Verifiche condotte secondo D.M. 17-01-18 (N.T.C.)

Dati geometrici

X ini.	Y ini.	X fin.	Y fin.	Quota i.	Quota.s	l	Sp.	h netta	h ini.	h fin.	a	a.s.,sx	a.s.,dx
-13.753	-4.784	-13.753	-3.254	L4	Z medio 611 cm	1.529	0.28	1.76	1.76	1.76			

Caratteristiche del materiale

(Circolare 7 21-01-19 C8.5.I) Muratura in mattoni pieni e malta di calce LC2_Corti

fb	fk	fvk0	fmedio	τ0	fv0	μ	ϕ	fv,lim	E	G	FC
600000			345000	9000	20000	0.58	0.77	32500	320000000	128000000	1.2

Verifica a pressoflessione nel piano secondo D.M. 17-01-18 NTC §7.8.2.2.1 in combinazioni non sismiche, γM = 3

Comb.	Quota	N	M	σ0	Mu	c.s.	Verifica
SLU 78	4.35	-16870	77.48	39396	6661.05	85.976	Si
SLU 78	6.11	-16862	2673.22	39378	6660.85	2.492	Si
SLU 80	4.35	-16798	70.51	39227	6659.12	94.438	Si
SLU 80	6.11	-16784	2652.17	39197	6658.75	2.511	Si
SLU 77	4.35	-16833	79.94	39310	6660.09	83.313	Si
SLU 77	6.11	-16855	2687.59	39362	6660.67	2.478	Si
SLU 84	4.35	-17112	67.7	39961	6665.82	98.463	Si
SLU 84	6.11	-17232	2854.92	40242	6667.24	2.335	Si
SLU 83	4.35	-17075	70.16	39875	6665.25	94.997	Si
SLU 83	6.11	-17226	2869.29	40226	6667.17	2.324	Si
SLU 75	4.35	-16626	65.35	38828	6653.65	101.812	Si
SLU 75	6.11	-16579	2630.6	38718	6651.92	2.529	Si
SLU 79	4.35	-16761	72.98	39141	6658.05	91.234	Si
SLU 79	6.11	-16778	2666.54	39181	6658.55	2.497	Si
SLU 82	4.35	-16868	55.57	39393	6661.01	119.856	Si
SLU 82	6.11	-16950	2812.3	39582	6662.9	2.369	Si
SLU 81	4.35	-16831	58.04	39306	6660.05	114.75	Si
SLU 81	6.11	-16943	2826.67	39566	6662.75	2.357	Si
SLU 74	4.35	-16589	67.82	38741	6652.3	98.092	Si
SLU 74	6.11	-16573	2644.97	38702	6651.66	2.515	Si

Verifica a pressoflessione nel piano secondo D.M. 17-01-18 NTC §7.8.2.2.1 in combinazioni sismiche, γM = 2

Comb.	Quota	N	M	σ0	Mu	c.s.	Verifica
SLV 8	4.35	-5969	1033.83	13939	4043.4	3.911	Si
SLV 8	6.11	-6973	1452.72	16285	4621.68	3.181	Si
SLV 11	4.35	-6233	850.65	14555	4198.14	4.935	Si
SLV 11	6.11	-6987	1454.6	16317	4629.43	3.183	Si
SLV 3	4.35	-9543	602.28	22286	5966.28	9.906	Si
SLV 3	6.11	-10042	1586.82	23452	6205.24	3.91	Si
SLV 7	4.35	-5969	1033.83	13939	4043.4	3.911	Si
SLV 7	6.11	-6973	1452.72	16285	4621.68	3.181	Si
SLV 14	4.35	-13750	-561.44	32111	7751.18	13.806	Si
SLV 14	6.11	-12733	1709.9	29735	7367.02	4.308	Si
SLV 4	4.35	-9543	602.28	22286	5966.28	9.906	Si
SLV 4	6.11	-10042	1586.82	23452	6205.24	3.91	Si
SLV 12	4.35	-6233	850.65	14555	4198.14	4.935	Si
SLV 12	6.11	-6987	1454.6	16317	4629.43	3.183	Si
SLV 15	4.35	-10423	-8.35	24340	6382.24	764.304	Si
SLV 15	6.11	-10089	1593.08	23560	6226.92	3.909	Si
SLV 13	4.35	-13750	-561.44	32111	7751.18	13.806	Si
SLV 13	6.11	-12733	1709.9	29735	7367.02	4.308	Si
SLV 16	4.35	-10423	-8.35	24340	6382.24	764.304	Si
SLV 16	6.11	-10089	1593.08	23560	6226.92	3.909	Si

Verifica a taglio nel piano secondo D.M. 17-01-18 (N.T.C.) §7.8.2.2.2 con rottura per scorrimento in combinazioni non sismiche, γM = 3

Comb.	Quota	N	V par	M	σ0	σN	l'	fvd	Vt scorr.	Vt fess.diag.	Vt,lim	c.s.	Verifica
SLU 40	4.35	-13958	-1074	64.11		32596	1.5293	9902	4240			3.95	Si
SLU 40	6.11	-14185	-627	2484.73		33125	1.5293	9972	4270			6.81	Si
SLU 75	4.35	-16626	-1146	65.35		38828	1.5293	10733	4596			4.01	Si
SLU 75	6.11	-16579	-659	2630.6		38718	1.5293	10718	4590			6.96	Si
SLU 81	4.35	-16831	-1212	58.04		39306	1.5293	10796	4623			3.81	Si
SLU 81	6.11	-16943	-714	2826.67		39566	1.5293	10831	4638			6.5	Si
SLU 39	4.35	-13921	-1072	66.58		32509	1.5293	9890	4235			3.95	Si
SLU 39	6.11	-14178	-629	2499.1		33109	1.5293	9970	4269			6.79	Si
SLU 84	4.35	-17112	-1215	67.7		39961	1.5293	10833	4639			3.82	Si
SLU 84	6.11	-17232	-699	2854.92		40242	1.5293	10833	4639			6.63	Si
SLU 42	4.35	-14202	-1074	76.24		33165	1.5293	9978	4272			3.98	Si
SLU 42	6.11	-14467	-615	2527.34		33785	1.5293	10060	4308			7.01	Si
SLU 82	4.35	-16868	-1214	55.57		39393	1.5293	10808	4628			3.81	Si
SLU 82	6.11	-16950	-712	2812.3		39582	1.5293	10833	4639			6.52	Si
SLU 74	4.35	-16589	-1144	67.82		38741	1.5293	10721	4591			4.01	Si
SLU 74	6.11	-16573	-661	2644.97		38702	1.5293	10716	4589			6.94	Si
SLU 83	4.35	-17075	-1213	70.16		39875	1.5293	10833	4639			3.82	Si
SLU 83	6.11	-17226	-701	2869.29		40226	1.5293	10833	4639			6.62	Si
SLU 41	4.35	-14164	-1073	78.7		33078	1.5293	9966	4268			3.98	Si
SLU 41	6.11	-14461	-616	2541.71		33769	1.5293	10058	4307			6.99	Si

Verifica a taglio nel piano secondo D.M. 17-01-18 (N.T.C.) §7.8.2.2.2 con rottura per scorrimento in combinazioni sismiche, γM = 2

Comb.	Quota	N	V par	M	σ0	σN	l'	fvd	Vt scorr.	Vt fess.diag.	Vt,lim	c.s.	Verifica
SLV 10	4.35	-17325	-4846	-993		40458	1.5293	16250	6958			1.44	Si
SLV 10	6.11	-15802	-4993	1844		36902	1.5293	15714	6729			1.35	Si
SLV 8	4.35	-5969	3371	1033.83		13939	1.5293	11121	4762			1.41	Si
SLV 8	6.11	-6973	4132	1452.72		16285	1.5293	11590	4963			1.2	Si
SLV 9	4.35	-17325	-4846	-993		40458	1.5293	16250	6958			1.44	Si

Comb.	Quota	N	V par	M	σ0	σN	l'	fvd	Vt scorr.	Vt fess.diag.	Vt,lim	c.s.	Verifica
SLV 9	6.11	-15802	-4993	1844		36902	1.5293	15714	6729			1.35	Si
SLV 6	4.35	-17061	-3271	-809.81		39841	1.5293	16250	6958			2.13	Si
SLV 6	6.11	-15788	-3659	1842.13		36870	1.5293	15707	6726			1.84	Si
SLV 12	4.35	-6233	1796	850.65		14555	1.5293	11244	4815			2.68	Si
SLV 12	6.11	-6987	2799	1454.6		16317	1.5293	11597	4966			1.77	Si
SLV 13	4.35	-13750	-4359	-561.44		32111	1.5293	14755	6318			1.45	Si
SLV 13	6.11	-12733	-3822	1709.9		29735	1.5293	14280	6115			1.6	Si
SLV 14	4.35	-13750	-4359	-561.44		32111	1.5293	14755	6318			1.45	Si
SLV 14	6.11	-12733	-3822	1709.9		29735	1.5293	14280	6115			1.6	Si
SLV 11	4.35	-6233	1796	850.65		14555	1.5293	11244	4815			2.68	Si
SLV 11	6.11	-6987	2799	1454.6		16317	1.5293	11597	4966			1.77	Si
SLV 7	4.35	-5969	3371	1033.83		13939	1.5293	11121	4762			1.41	Si
SLV 7	6.11	-6973	4132	1452.72		16285	1.5293	11590	4963			1.2	Si
SLV 5	4.35	-17061	-3271	-809.81		39841	1.5293	16250	6958			2.13	Si
SLV 5	6.11	-15788	-3659	1842.13		36870	1.5293	15707	6726			1.84	Si

Verifica a pressoflessione fuori piano D.M. 17-01-18 (N.T.C.)

quota 5.23 Wa 0.05 denominatore 8 γM = 2

Comb.	fd	Sa	σ0	N	M	Mc	Coeff.s.	Verifica
SLV 8	143750	0.36	12891	-5520	37.14	691.29	18.61	Si
SLV 7	143750	0.36	12891	-5520	37.14	691.29	18.61	Si
SLV 11	143750	0.36	13613	-5829	37.14	725.15	19.53	Si
SLV 12	143750	0.36	13613	-5829	37.14	725.15	19.53	Si
SLV 3	143750	0.36	20278	-8683	37.14	1013.93	27.3	Si
SLV 4	143750	0.36	20278	-8683	37.14	1013.93	27.3	Si
SLV 16	143750	0.36	22682	-9713	37.14	1107.38	29.82	Si
SLV 15	143750	0.36	22682	-9713	37.14	1107.38	29.82	Si
SLV 2	143750	0.36	27331	-11704	37.14	1272	34.25	Si
SLV 1	143750	0.36	27331	-11704	37.14	1272	34.25	Si

Verifica dei meccanismi locali di collasso con analisi cinematica lineare

forza di aggancio al piano = 0 quota mezzeria = 5.23 Wa = 0.05 Ta = 0.0185

Comb.	N top	N base	V orto	α0	M*	e*	a0*	aLim	Verifica
SLV 14	-12733	-13750	57	0.079	1402.6	0.977	1.1801	4.12143	No
SLV 13	-12733	-13750	57	0.079	1402.6	0.977	1.1801	4.12143	No
SLV 9	-15802	-17325	73	0.078	1715.2	0.981	1.16136	4.00899	No
SLV 10	-15802	-17325	73	0.078	1715.2	0.981	1.16136	4.00899	No
SLV 5	-15788	-17061	64	0.079	1713.8	0.981	1.16985	4.00899	No
SLV 6	-15788	-17061	64	0.079	1713.8	0.981	1.16985	4.00899	No
SLV 2	-12687	-12871	26	0.082	1397.9	0.976	1.21516	4.12143	No
SLV 1	-12687	-12871	26	0.082	1397.9	0.976	1.21516	4.12143	No
SLV 16	-10089	-10423	34	0.081	1133.2	0.971	1.21782	4.12143	No
SLV 15	-10089	-10423	34	0.081	1133.2	0.971	1.21782	4.12143	No

Tabella dei coefficienti di sicurezza minimi

Stato limite	Coeff.s.	Comb.	Verifica
PF_SLU	2.324	SLU 83	Si
V_SLU	3.812	SLU 82	Si
PF_SLV	3.181	SLV 7	Si
V_SLV	1.201	SLV 7	Si
PFFP_SLV	18.615	SLV 7	Si
R_SLV	0.286	SLV 13	No

Maschio 131

Verifiche condotte secondo D.M. 17-01-18 (N.T.C.)

Dati geometrici

X ini.	Y ini.	X fin.	Y fin.	Quota i.	Quota.s	l	Sp.	h netta	h ini.	h fin.	a	a.s.,sx	a.s.,dx
-13.753	-4.784	-13.753	-3.254	Z medio 611 cm	L5	1.529	0.28	1.79	1.79	1.79			

Caratteristiche del materiale

(Circolare 7 21-01-19 C8.5.I) Muratura in mattoni pieni e malta di calce LC2_Corti

fb	fk	fvk0	fmedio	τ0	fv0	μ	φ	fv,lim	E	G	FC
600000			345000	9000	20000	0.58	0.77	32500	320000000	128000000	1.2

Verifica a pressoflessione nel piano secondo D.M. 17-01-18 NTC §7.8.2.2.1 in combinazioni non sismiche, γM = 3

Comb.	Quota	N	M	σ0	Mu	c.s.	Verifica
SLU 82	6.11	-12683	-470.55	29620	6172.06	13.117	Si
SLU 82	7.9	-10976	392.02	25633	5752.08	14.673	Si
SLU 81	6.11	-12679	-457.15	29608	6171.04	13.499	Si
SLU 81	7.9	-10970	404.53	25619	5750.37	14.215	Si
SLU 41	6.11	-10602	-413.45	24759	5643	13.648	Si
SLU 41	7.9	-9306	375.62	21733	5217.63	13.891	Si
SLU 39	6.11	-10356	-431.93	24183	5567.73	12.89	Si
SLU 39	7.9	-9059	366.78	21155	5128	13.981	Si
SLU 61	6.11	-11908	-437.79	27809	5997.12	13.699	Si
SLU 61	7.9	-10234	325.58	23899	5529.6	16.984	Si
SLU 42	6.11	-10607	-426.86	24771	5644.46	13.223	Si
SLU 42	7.9	-9312	363.11	21747	5219.78	14.375	Si
SLU 19	6.11	-9585	-412.57	22384	5315.32	12.883	Si
SLU 19	7.9	-8322	287.83	19435	4845.52	16.835	Si
SLU 21	6.11	-9832	-394.1	22960	5398.93	13.7	Si
SLU 21	7.9	-8570	296.67	20013	4943.14	16.662	Si
SLU 40	6.11	-10360	-445.33	24195	5569.24	12.506	Si
SLU 40	7.9	-9065	354.27	21169	5130.22	14.481	Si

Comb.	Quota	N	M	σ0	Mu	c.s.	Verifica
SLU 18	6.11	-9580	-399.17	22372	5313.64	13.312	Si
SLU 18	7.9	-8316	300.34	19421	4843.1	16.125	Si

Verifica a pressoflessione nel piano secondo D.M. 17-01-18 NTC §7.8.2.2.1 in combinazioni sismiche, γM = 2

Comb.	Quota	N	M	σ0	Mu	c.s.	Verifica
SLV 16	6.11	-7914	-689.66	18482	5136.34	7.448	Si
SLV 16	7.9	-8051	603.22	18802	5209.16	8.636	Si
SLV 4	6.11	-7690	821.73	17958	5015.94	6.104	Si
SLV 4	7.9	-5775	-329.04	13486	3928.39	11.939	Si
SLV 8	6.11	-4877	881.76	11389	3381.56	3.835	Si
SLV 8	7.9	-4849	-243.94	11323	3363.96	13.79	Si
SLV 3	6.11	-7690	821.73	17958	5015.94	6.104	Si
SLV 3	7.9	-5775	-329.04	13486	3928.39	11.939	Si
SLV 13	6.11	-10393	-1194.54	24270	6368.43	5.331	Si
SLV 13	7.9	-9528	809.96	22251	5959.02	7.357	Si
SLV 9	6.11	-13206	-1254.58	30839	7549.3	6.017	Si
SLV 9	7.9	-10454	724.86	24414	6396.77	8.825	Si
SLV 7	6.11	-4877	881.76	11389	3381.56	3.835	Si
SLV 7	7.9	-4849	-243.94	11323	3363.96	13.79	Si
SLV 10	6.11	-13206	-1254.58	30839	7549.3	6.017	Si
SLV 10	7.9	-10454	724.86	24414	6396.77	8.825	Si
SLV 14	6.11	-10393	-1194.54	24270	6368.43	5.331	Si
SLV 14	7.9	-9528	809.96	22251	5959.02	7.357	Si
SLV 15	6.11	-7914	-689.66	18482	5136.34	7.448	Si
SLV 15	7.9	-8051	603.22	18802	5209.16	8.636	Si

Verifica a taglio nel piano secondo D.M. 17-01-18 (N.T.C.) §7.8.2.2.2 con rottura per scorrimento in combinazioni non sismiche, γM = 3

Comb.	Quota	N	V par	M	σ0	σN	I'	fvd	Vt scorr.	Vt fess.diag.	Vt,lim	c.s.	Verifica
SLU 42	6.11	-10607	-890	-426.86		24771	1.5293	8858	3793			4.26	Si
SLU 42	7.9	-9312	-500	363.11		21747	1.5293	8455	3621			7.24	Si
SLU 83	6.11	-12925	-985	-438.68		30184	1.5293	9580	4102			4.17	Si
SLU 83	7.9	-11218	-565	413.37		26197	1.5293	9048	3875			6.86	Si
SLU 61	6.11	-11908	-881	-437.79		27809	1.5293	9263	3967			4.5	Si
SLU 61	7.9	-10234	-503	325.58		23899	1.5293	8742	3743			7.44	Si
SLU 40	6.11	-10360	-905	-445.33		24195	1.5293	8782	3760			4.15	Si
SLU 40	7.9	-9065	-525	354.27		21169	1.5293	8378	3588			6.83	Si
SLU 82	6.11	-12683	-1001	-470.55		29620	1.5293	9505	4070			4.07	Si
SLU 82	7.9	-10976	-581	392.02		25633	1.5293	8973	3842			6.61	Si
SLU 39	6.11	-10356	-904	-431.93		24183	1.5293	8780	3760			4.16	Si
SLU 39	7.9	-9059	-534	366.78		21155	1.5293	8376	3587			6.72	Si
SLU 73	6.11	-12402	-904	-396.19		28961	1.5293	9417	4033			4.46	Si
SLU 73	7.9	-10651	-522	354.1		24874	1.5293	8872	3799			7.28	Si
SLU 81	6.11	-12679	-1000	-457.15		29608	1.5293	9503	4069			4.07	Si
SLU 81	7.9	-10970	-590	404.53		25619	1.5293	8971	3842			6.51	Si
SLU 41	6.11	-10602	-889	-413.45		24759	1.5293	8857	3793			4.27	Si
SLU 41	7.9	-9306	-509	375.62		21733	1.5293	8453	3620			7.11	Si
SLU 84	6.11	-12930	-986	-452.08		30195	1.5293	9582	4103			4.16	Si
SLU 84	7.9	-11224	-556	400.86		26211	1.5293	9050	3875			6.97	Si

Verifica a taglio nel piano secondo D.M. 17-01-18 (N.T.C.) §7.8.2.2.2 con rottura per scorrimento in combinazioni sismiche, γM = 2

Comb.	Quota	N	V par	M	σ0	σN	I'	fvd	Vt scorr.	Vt fess.diag.	Vt,lim	c.s.	Verifica
SLV 4	6.11	-7690	2886	821.73		17958	1.5293	11925	5106			1.77	Si
SLV 4	7.9	-5775	2954	-329.04		13486	1.5293	11030	4723			1.6	Si
SLV 8	6.11	-4877	3262	881.76		11389	1.5293	10611	4544			1.39	Si
SLV 8	7.9	-4849	3260	-243.94		11323	1.5293	10598	4538			1.39	Si
SLV 13	6.11	-10393	-3999	-1194.54		24270	1.5293	13187	5647			1.41	Si
SLV 13	7.9	-9528	-3622	809.96		22251	1.5293	12783	5474			1.51	Si
SLV 5	6.11	-13138	-2860	-801.16		30682	1.5293	14470	6196			2.17	Si
SLV 5	7.9	-9771	-2470	445.18		22819	1.5293	12897	5523			2.24	Si
SLV 6	6.11	-13138	-2860	-801.16		30682	1.5293	14470	6196			2.17	Si
SLV 6	7.9	-9771	-2470	445.18		22819	1.5293	12897	5523			2.24	Si
SLV 3	6.11	-7690	2886	821.73		17958	1.5293	11925	5106			1.77	Si
SLV 3	7.9	-5775	2954	-329.04		13486	1.5293	11030	4723			1.6	Si
SLV 14	6.11	-10393	-3999	-1194.54		24270	1.5293	13187	5647			1.41	Si
SLV 14	7.9	-9528	-3622	809.96		22251	1.5293	12783	5474			1.51	Si
SLV 10	6.11	-13206	-4374	-1254.58		30839	1.5293	14501	6210			1.42	Si
SLV 10	7.9	-10454	-3927	724.86		24414	1.5293	13216	5659			1.44	Si
SLV 7	6.11	-4877	3262	881.76		11389	1.5293	10611	4544			1.39	Si
SLV 7	7.9	-4849	3260	-243.94		11323	1.5293	10598	4538			1.39	Si
SLV 9	6.11	-13206	-4374	-1254.58		30839	1.5293	14501	6210			1.42	Si
SLV 9	7.9	-10454	-3927	724.86		24414	1.5293	13216	5659			1.44	Si

Verifica a pressoflessione fuori piano D.M. 17-01-18 (N.T.C.)

quota 7.005 Wa 0.05 denominatore 8 γM = 2

Comb.	fd	Sa	σ0	N	M	Mc	Coeff.s.	Verifica
SLV 8	143750	0.39	11648	-4988	42.51	631.73	14.86	Si
SLV 7	143750	0.39	11648	-4988	42.51	631.73	14.86	Si
SLV 12	143750	0.39	12257	-5248	42.51	661.08	15.55	Si
SLV 11	143750	0.39	12257	-5248	42.51	661.08	15.55	Si
SLV 4	143750	0.39	16367	-7008	42.51	849.75	19.99	Si
SLV 3	143750	0.39	16367	-7008	42.51	849.75	19.99	Si
SLV 15	143750	0.39	18396	-7877	42.51	936.79	22.04	Si
SLV 16	143750	0.39	18396	-7877	42.51	936.79	22.04	Si
SLV 2	143750	0.39	21020	-9001	42.51	1043.35	24.54	Si
SLV 1	143750	0.39	21020	-9001	42.51	1043.35	24.54	Si

Verifica dei meccanismi locali di collasso con analisi cinematica lineare

forza di aggancio al piano = 0 quota mezzeria = 7.005 Wa = 0.05 Ta = 0.0191

Comb.	N top	N base	V orto	α0	M*	e*	a0*	aLim	Verifica
SLV 14	-9528	-10393	-18	0.082	1078	0.969	1.22585	4.49335	No
SLV 13	-9528	-10393	-18	0.082	1078	0.969	1.22585	4.49335	No
SLV 15	-8051	-7914	-18	0.082	927.6	0.965	1.2392	4.49335	No
SLV 16	-8051	-7914	-18	0.082	927.6	0.965	1.2392	4.49335	No
SLV 1	-7252	-10168	11	0.084	846.3	0.962	1.26282	4.49335	No
SLV 2	-7252	-10168	11	0.084	846.3	0.962	1.26282	4.49335	No
SLV 10	-10454	-13206	-6	0.082	1172.3	0.972	1.23346	4.36623	No
SLV 9	-10454	-13206	-6	0.082	1172.3	0.972	1.23346	4.36623	No
SLV 5	-9771	-13138	2	0.083	1102.7	0.97	1.24575	4.36623	No
SLV 6	-9771	-13138	2	0.083	1102.7	0.97	1.24575	4.36623	No

Tabella dei coefficienti di sicurezza minimi

Stato limite	Coeff.s.	Comb.	Verifica
PF_SLU	12.506	SLU 40	Si
V_SLU	4.066	SLU 82	Si
PF_SLV	3.835	SLV 7	Si
V_SLV	1.392	SLV 7	Si
PFFP_SLV	14.86	SLV 7	Si
R_SLV	0.273	SLV 13	No

Maschio 133

Verifiche condotte secondo D.M. 17-01-18 (N.T.C.)

Dati geometrici

X ini.	Y ini.	X fin.	Y fin.	Quota i.	Quota.s	l	Sp.	h netta	h ini.	h fin.	a	a.s.,sx	a.s.,dx
-13.753	-3.254	-13.753	-0.354	Z medio 523 cm	L5	2.901	0.28	2.67	1.79	3.55			

Caratteristiche del materiale

(Circolare 7 21-01-19 C8.5.I) Muratura in mattoni pieni e malta di calce LC2_Corti

fb	fk	fvk0	fmedio	τ0	fv0	μ	ϕ	fv,lim	E	G	FC
600000			345000	9000	20000	0.58	0.77	32500	320000000	128000000	1.2

Verifica a pressoflessione nel piano secondo D.M. 17-01-18 NTC §7.8.2.2.1 in combinazioni non sismiche, γM = 3

Comb.	Quota	N	M	σ0	Mu	c.s.	Verifica
SLU 74	6.11	-31581	4585.99	38884	23938.98	5.22	Si
SLU 74	7.9	-25328	488.24	31185	22670.9	46.434	Si
SLU 82	6.11	-31430	4728.27	38698	23928.57	5.061	Si
SLU 82	7.9	-25125	455.74	30935	22600.97	49.592	Si
SLU 81	6.11	-31553	4759.91	38849	23937.08	5.029	Si
SLU 81	7.9	-25227	471.24	31060	22636.38	48.036	Si
SLU 80	6.11	-31941	4617.18	39328	23959.81	5.189	Si
SLU 80	7.9	-25657	498.96	31590	22780.33	45.656	Si
SLU 41	6.11	-27237	4433.99	33536	23239.96	5.241	Si
SLU 41	7.9	-21922	545.05	26991	21258.87	39.003	Si
SLU 83	6.11	-32356	4902.71	39838	23976.72	4.891	Si
SLU 83	7.9	-25956	532	31958	22875.68	43	Si
SLU 77	6.11	-32384	4728.79	39873	23977.61	5.071	Si
SLU 77	7.9	-26057	548.99	32082	22906.98	41.725	Si
SLU 79	6.11	-32064	4648.82	39478	23965.59	5.155	Si
SLU 79	7.9	-25759	514.46	31716	22813.36	44.344	Si
SLU 78	6.11	-32262	4697.15	39723	23973.56	5.104	Si
SLU 78	7.9	-25954	533.49	31956	22875.29	42.878	Si
SLU 84	6.11	-32234	4871.07	39687	23972.51	4.921	Si
SLU 84	7.9	-25854	516.5	31832	22843.54	44.228	Si

Verifica a pressoflessione nel piano secondo D.M. 17-01-18 NTC §7.8.2.2.1 in combinazioni sismiche, γM = 2

Comb.	Quota	N	M	σ0	Mu	c.s.	Verifica
SLV 1	6.11	-19463	-264.9	23964	22691.57	85.66	Si
SLV 1	7.9	-15281	1350.08	18815	18750.05	13.888	Si
SLV 15	6.11	-23749	5793.95	29241	26201.18	4.522	Si
SLV 15	7.9	-19061	-976.94	23468	22334.69	22.862	Si
SLV 12	6.11	-19781	5928.82	24355	22970.47	3.874	Si
SLV 12	7.9	-16237	-384.32	19992	19695.96	51.249	Si
SLV 13	6.11	-25376	4306.82	31245	27392.94	6.36	Si
SLV 13	7.9	-20050	-830.68	24687	23204.32	27.934	Si
SLV 16	6.11	-23749	5793.95	29241	26201.18	4.522	Si
SLV 16	7.9	-19061	-976.94	23468	22334.69	22.862	Si
SLV 8	6.11	-18007	4557.31	22171	21377.24	4.691	Si
SLV 8	7.9	-14806	269.91	18230	18270.01	67.689	Si
SLV 14	6.11	-25376	4306.82	31245	27392.94	6.36	Si
SLV 14	7.9	-20050	-830.68	24687	23204.32	27.934	Si
SLV 2	6.11	-19463	-264.9	23964	22691.57	85.66	Si
SLV 2	7.9	-15281	1350.08	18815	18750.05	13.888	Si
SLV 7	6.11	-18007	4557.31	22171	21377.24	4.691	Si
SLV 7	7.9	-14806	269.91	18230	18270.01	67.689	Si
SLV 11	6.11	-19781	5928.82	24355	22970.47	3.874	Si
SLV 11	7.9	-16237	-384.32	19992	19695.96	51.249	Si

Verifica a taglio nel piano secondo D.M. 17-01-18 (N.T.C.) §7.8.2.2.2 con rottura per scorrimento in combinazioni non sismiche, γM = 3

Comb.	Quota	N	V par	M	σ0	σN	l'	fvd	Vt scorr.	Vt fess.diag.	Vt,lim	c.s.	Verifica
SLU 40	6.11	-26312	1396	4259.55		32396	2.9007	9875	8020			5.75	Si
SLU 40	7.9	-21090	1157	468.79		25968	2.9007	9018	7324			6.33	Si
SLU 81	6.11	-31553	1488	4759.91		38849	2.9007	10735	8719			5.86	Si
SLU 81	7.9	-25227	1243	471.24		31060	2.9007	9697	7876			6.33	Si
SLU 73	6.11	-30253	1371	4310.49		37249	2.9007	10522	8546			6.23	Si

Comb.	Quota	N	V par	M	σ0	σN	l'	fvd	Vt scorr.	Vt fess.diag.	Vt,lim	c.s.	Verifica
SLU 73	7.9	-24131	1149	367.11		29711	2.9007	9517	7730			6.73	Si
SLU 83	6.11	-32356	1478	4902.71		39838	2.9007	10833	8799			5.95	Si
SLU 83	7.9	-25956	1246	532		31958	2.9007	9817	7973			6.4	Si
SLU 84	6.11	-32234	1495	4871.07		39687	2.9007	10833	8799			5.89	Si
SLU 84	7.9	-25854	1247	516.5		31832	2.9007	9800	7959			6.38	Si
SLU 41	6.11	-27237	1369	4433.99		33536	2.9007	10027	8144			5.95	Si
SLU 41	7.9	-21922	1159	545.05		26991	2.9007	9154	7435			6.42	Si
SLU 82	6.11	-31430	1505	4728.27		38698	2.9007	10715	8703			5.78	Si
SLU 82	7.9	-25125	1244	455.74		30935	2.9007	9680	7862			6.32	Si
SLU 39	6.11	-26434	1379	4291.19		32547	2.9007	9895	8037			5.83	Si
SLU 39	7.9	-21193	1156	484.3		26093	2.9007	9035	7338			6.35	Si
SLU 31	6.11	-25135	1262	3841.77		30947	2.9007	9682	7863			6.23	Si
SLU 31	7.9	-20097	1062	380.16		24744	2.9007	8855	7192			6.77	Si
SLU 42	6.11	-27115	1386	4402.35		33385	2.9007	10007	8127			5.86	Si
SLU 42	7.9	-21819	1160	529.55		26865	2.9007	9138	7421			6.4	Si

Verifica a taglio nel piano secondo D.M. 17-01-18 (N.T.C.) §7.8.2.2.2 con rottura per scorrimento in combinazioni sismiche, γM = 2

Comb.	Quota	N	V par	M	σ0	σN	l'	fvd	Vt scorr.	Vt fess.diag.	Vt,lim	c.s.	Verifica
SLV 12	6.11	-19781	12113	5928.82		24355	2.9007	13204	10724			0.89	No, Vu<V
SLV 12	7.9	-16237	10363	-384.32		19992	2.9007	12332	10016			0.97	No, Vu<V
SLV 11	6.11	-19781	12113	5928.82		24355	2.9007	13204	10724			0.89	No, Vu<V
SLV 11	7.9	-16237	10363	-384.32		19992	2.9007	12332	10016			0.97	No, Vu<V
SLV 9	6.11	-25205	-7788	971.74		31034	2.9007	14540	11809			1.52	Si
SLV 9	7.9	-19536	-6185	103.22		24053	2.9007	13144	10675			1.73	Si
SLV 6	6.11	-23431	-10482	-399.78		28849	2.9007	14103	11454			1.09	Si
SLV 6	7.9	-18105	-8926	757.45		22292	2.9007	12792	10389			1.16	Si
SLV 15	6.11	-23749	8291	5793.95		29241	2.9007	14182	11518			1.39	Si
SLV 15	7.9	-19061	7769	-976.94		23468	2.9007	13027	10580			1.36	Si
SLV 8	6.11	-18007	9419	4557.31		22171	2.9007	12768	10370			1.1	Si
SLV 8	7.9	-14806	7622	269.91		18230	2.9007	11979	9729			1.28	Si
SLV 10	6.11	-25205	-7788	971.74		31034	2.9007	14540	11809			1.52	Si
SLV 10	7.9	-19536	-6185	103.22		24053	2.9007	13144	10675			1.73	Si
SLV 5	6.11	-23431	-10482	-399.78		28849	2.9007	14103	11454			1.09	Si
SLV 5	7.9	-18105	-8926	757.45		22292	2.9007	12792	10389			1.16	Si
SLV 7	6.11	-18007	9419	4557.31		22171	2.9007	12768	10370			1.1	Si
SLV 7	7.9	-14806	7622	269.91		18230	2.9007	11979	9729			1.28	Si
SLV 16	6.11	-23749	8291	5793.95		29241	2.9007	14182	11518			1.39	Si
SLV 16	7.9	-19061	7769	-976.94		23468	2.9007	13027	10580			1.36	Si

Verifica a pressoflessione fuori piano D.M. 17-01-18 (N.T.C.)

quota 7.005 Wa 0.05 denominatore 8 γM = 2

Comb.	fd	Sa	σ0	N	M	Mc	Coeff.s.	Verifica
SLV 4	143750	0.39	20368	-16543	179.4	1929.92	10.76	Si
SLV 3	143750	0.39	20368	-16543	179.4	1929.92	10.76	Si
SLV 8	143750	0.39	21412	-17391	179.4	2008.04	11.19	Si
SLV 7	143750	0.39	21412	-17391	179.4	2008.04	11.19	Si
SLV 2	143750	0.39	21458	-17428	179.4	2011.4	11.21	Si
SLV 1	143750	0.39	21458	-17428	179.4	2011.4	11.21	Si
SLV 11	143750	0.39	23397	-19003	179.4	2150.94	11.99	Si
SLV 12	143750	0.39	23397	-19003	179.4	2150.94	11.99	Si
SLV 5	143750	0.39	25044	-20341	179.4	2264.01	12.62	Si
SLV 6	143750	0.39	25044	-20341	179.4	2264.01	12.62	Si

Verifica dei meccanismi locali di collasso con analisi cinematica lineare

forza di aggancio al piano = 0 quota mezzeria = 7.005 Wa = 0.05 Ta = 0.0425

Comb.	N top	N base	V orto	α0	M*	e*	a0*	aLim	Verifica
SLV 14	-20050	-25376	122	0.052	2346.9	0.961	0.77913	6.61876	No
SLV 13	-20050	-25376	122	0.052	2346.9	0.961	0.77913	6.61876	No
SLV 3	-14292	-17836	-127	0.051	1761.6	0.95	0.77922	6.61876	No
SLV 4	-14292	-17836	-127	0.051	1761.6	0.95	0.77922	6.61876	No
SLV 7	-14806	-18007	-144	0.05	1813.9	0.951	0.7636	6.16887	No
SLV 8	-14806	-18007	-144	0.05	1813.9	0.951	0.7636	6.16887	No
SLV 9	-19536	-25205	139	0.051	2294.6	0.96	0.76765	6.16887	No
SLV 10	-19536	-25205	139	0.051	2294.6	0.96	0.76765	6.16887	No
SLV 15	-19061	-23749	54	0.055	2246.3	0.96	0.82917	6.61876	No
SLV 16	-19061	-23749	54	0.055	2246.3	0.96	0.82917	6.61876	No

Tabella dei coefficienti di sicurezza minimi

Stato limite	Coeff.s.	Comb.	Verifica
PF_SLU	4.891	SLU 83	Si
V_SLU	5.746	SLU 40	Si
PF_SLV	3.874	SLV 11	Si
V_SLV	0.885	SLV 11	No
PFFP_SLV	10.757	SLV 3	Si
R_SLV	0.118	SLV 13	No

Maschio 134

Verifiche condotte secondo D.M. 17-01-18 (N.T.C.)

Dati geometrici

X ini.	Y ini.	X fin.	Y fin.	Quota i.	Quota.s	l	Sp.	h netta	h ini.	h fin.	a	a.s.,sx	a.s.,dx
-13.753	-0.354	-13.753	1.046	L4	L5	1.4	0.28	3.55	3.55	3.55			

Caratteristiche del materiale

(Circolare 7 21-01-19 C8.5.I) Muratura in mattoni pieni e malta di calce LC2_Corti

fb	fk	fvk0	fmedio	τ0	fv0	μ	ϕ	fv,lim	E	G	FC
600000			345000	9000	20000	0.58	0.77	32500	320000000	128000000	1.2

Verifica a pressoflessione nel piano secondo D.M. 17-01-18 NTC §7.8.2.2.1 in combinazioni non sismiche, γM = 3

Comb.	Quota	N	M	σ0	Mu	c.s.	Verifica
SLU 78	4.35	-20731	1926.29	52884	5090.42	2.643	Si
SLU 78	7.9	-14561	649.63	37144	5544.79	8.535	Si
SLU 84	4.35	-20806	1929.93	53077	5074.51	2.629	Si
SLU 84	7.9	-14443	622.67	36843	5537.22	8.893	Si
SLU 81	4.35	-20381	1881.86	51992	5160.78	2.742	Si
SLU 81	7.9	-14038	598.12	35811	5506.6	9.207	Si
SLU 80	4.35	-20486	1896.95	52259	5140.24	2.71	Si
SLU 80	7.9	-14344	637.06	36592	5530.42	8.681	Si
SLU 82	4.35	-20261	1869.39	51685	5183.73	2.773	Si
SLU 82	7.9	-13947	587.46	35579	5498.72	9.36	Si
SLU 74	4.35	-20305	1878.22	51799	5175.29	2.755	Si
SLU 74	7.9	-14156	625.09	36112	5516.26	8.825	Si
SLU 83	4.35	-20926	1942.4	53383	5048.68	2.599	Si
SLU 83	7.9	-14534	633.33	37076	5543.11	8.752	Si
SLU 75	4.35	-20185	1865.75	51492	5197.84	2.786	Si
SLU 75	7.9	-14065	614.43	35880	5508.86	8.966	Si
SLU 77	4.35	-20851	1938.76	53190	5065	2.612	Si
SLU 77	7.9	-14652	660.29	37376	5550.21	8.406	Si
SLU 79	4.35	-20606	1909.42	52566	5116.1	2.679	Si
SLU 79	7.9	-14435	647.72	36824	5536.71	8.548	Si

Verifica a pressoflessione nel piano secondo D.M. 17-01-18 NTC §7.8.2.2.1 in combinazioni sismiche, γM = 2

Comb.	Quota	N	M	σ0	Mu	c.s.	Verifica
SLV 6	4.35	-8665	-513.96	22104	4968.13	9.666	Si
SLV 6	7.9	-9076	1125.95	23152	5149.24	4.573	Si
SLV 9	4.35	-11583	-125.52	29548	6147.31	48.974	Si
SLV 9	7.9	-9990	1161.26	25484	5534.41	4.766	Si
SLV 5	4.35	-8665	-513.96	22104	4968.13	9.666	Si
SLV 5	7.9	-9076	1125.95	23152	5149.24	4.573	Si
SLV 11	4.35	-18516	2973.11	47235	7950.81	2.674	Si
SLV 11	7.9	-9637	-329.54	24585	5388.73	16.352	Si
SLV 7	4.35	-15598	2584.67	39791	7363.01	2.849	Si
SLV 7	7.9	-8723	-364.86	22253	4994.14	13.688	Si
SLV 16	4.35	-19494	2341.77	49730	8092.09	3.456	Si
SLV 16	7.9	-10827	233.43	27620	5865.78	25.128	Si
SLV 10	4.35	-11583	-125.52	29548	6147.31	48.974	Si
SLV 10	7.9	-9990	1161.26	25484	5534.41	4.766	Si
SLV 8	4.35	-15598	2584.67	39791	7363.01	2.849	Si
SLV 8	7.9	-8723	-364.86	22253	4994.14	13.688	Si
SLV 15	4.35	-19494	2341.77	49730	8092.09	3.456	Si
SLV 15	7.9	-10827	233.43	27620	5865.78	25.128	Si
SLV 12	4.35	-18516	2973.11	47235	7950.81	2.674	Si
SLV 12	7.9	-9637	-329.54	24585	5388.73	16.352	Si

Verifica a taglio nel piano secondo D.M. 17-01-18 (N.T.C.) §7.8.2.2.2 con rottura per scorrimento in combinazioni non sismiche, γM = 3

Comb.	Quota	N	V par	M	σ0	σN	I'	fvd	Vt scorr.	Vt fess.diag.	Vt,lim	c.s.	Verifica
SLU 79	4.35	-20606	388	1909.42		52566	1.4	10833	4247			10.95	Si
SLU 79	7.9	-14435	-953	647.72		36824	1.4	10465	4102			4.31	Si
SLU 83	4.35	-20926	389	1942.4		53383	1.4	10833	4247			10.91	Si
SLU 83	7.9	-14534	-960	633.33		37076	1.4	10499	4116			4.29	Si
SLU 78	4.35	-20731	410	1926.29		52884	1.4	10833	4247			10.35	Si
SLU 78	7.9	-14561	-937	649.63		37144	1.4	10508	4119			4.39	Si
SLU 84	4.35	-20806	398	1929.93		53077	1.4	10833	4247			10.66	Si
SLU 84	7.9	-14443	-940	622.67		36843	1.4	10468	4103			4.37	Si
SLU 81	4.35	-20381	375	1881.86		51992	1.4	10833	4247			11.34	Si
SLU 81	7.9	-14038	-917	598.12		35811	1.4	10330	4050			4.41	Si
SLU 77	4.35	-20851	401	1938.76		53190	1.4	10833	4247			10.59	Si
SLU 77	7.9	-14652	-958	660.29		37376	1.4	10539	4131			4.31	Si
SLU 37	4.35	-17568	301	1638.34		44817	1.4	10833	4247			14.12	Si
SLU 37	7.9	-12360	-877	576.09		31530	1.4	9760	3826			4.36	Si
SLU 41	4.35	-17889	302	1671.32		45634	1.4	10833	4247			14.06	Si
SLU 41	7.9	-12458	-885	561.7		31782	1.4	9793	3839			4.34	Si
SLU 35	4.35	-17813	314	1667.67		45441	1.4	10833	4247			13.53	Si
SLU 35	7.9	-12576	-882	588.66		32082	1.4	9833	3855			4.37	Si
SLU 80	4.35	-20486	397	1896.95		52259	1.4	10833	4247			10.69	Si
SLU 80	7.9	-14344	-932	637.06		36592	1.4	10434	4090			4.39	Si

Verifica a taglio nel piano secondo D.M. 17-01-18 (N.T.C.) §7.8.2.2.2 con rottura per scorrimento in combinazioni sismiche, γM = 2

Comb.	Quota	N	V par	M	σ0	σN	I'	fvd	Vt scorr.	Vt fess.diag.	Vt,lim	c.s.	Verifica
SLV 7	4.35	-15598	4848	2584.67		39791	1.4	16250	6370			1.31	Si
SLV 7	7.9	-8723	3114	-364.86		22253	1.4	12784	5011			1.61	Si
SLV 12	4.35	-18516	4241	2973.11		47235	1.4	16250	6370			1.5	Si
SLV 12	7.9	-9637	2836	-329.54		24585	1.4	13250	5194			1.83	Si
SLV 10	4.35	-11583	-4320	-125.52		29548	1.4	14243	5583			1.29	Si
SLV 10	7.9	-9990	-4247	1161.26		25484	1.4	13430	5265			1.24	Si
SLV 3	4.35	-9767	2560	1046.97		24916	1.4	13317	5220			2.04	Si
SLV 3	7.9	-7780	959	115.73		19847	1.4	12303	4823			5.03	Si
SLV 6	4.35	-8665	-3713	-513.96		22104	1.4	12754	5000			1.35	Si
SLV 6	7.9	-9076	-3969	1125.95		23152	1.4	12964	5082			1.28	Si
SLV 5	4.35	-8665	-3713	-513.96		22104	1.4	12754	5000			1.35	Si
SLV 5	7.9	-9076	-3969	1125.95		23152	1.4	12964	5082			1.28	Si
SLV 8	4.35	-15598	4848	2584.67		39791	1.4	16250	6370			1.31	Si
SLV 8	7.9	-8723	3114	-364.86		22253	1.4	12784	5011			1.61	Si
SLV 9	4.35	-11583	-4320	-125.52		29548	1.4	14243	5583			1.29	Si
SLV 9	7.9	-9990	-4247	1161.26		25484	1.4	13430	5265			1.24	Si
SLV 4	4.35	-9767	2560	1046.97		24916	1.4	13317	5220			2.04	Si

Comb.	Quota	N	V par	M	σ0	σN	l'	fvd	Vt scorr.	Vt fess.diag.	Vt,lim	c.s.	Verifica
SLV 4	7.9	-7780	959	115.73		19847	1.4	12303	4823			5.03	Si
SLV 11	4.35	-18516	4241	2973.11		47235	1.4	16250	6370			1.5	Si
SLV 11	7.9	-9637	2836	-329.54		24585	1.4	13250	5194			1.83	Si

Verifica a pressoflessione fuori piano D.M. 17-01-18 (N.T.C.)

quota 6.125 Wa 0.05 denominatore 8 γM = 2

Comb.	fd	Sa	σ0	N	M	Mc	Coeff.s.	Verifica
SLV 2	143750	0.38	24563	-9629	145.76	1077.03	7.39	Si
SLV 1	143750	0.38	24563	-9629	145.76	1077.03	7.39	Si
SLV 6	143750	0.38	26028	-10203	145.76	1124.13	7.71	Si
SLV 5	143750	0.38	26028	-10203	145.76	1124.13	7.71	Si
SLV 3	143750	0.38	27231	-10675	145.76	1161.4	7.97	Si
SLV 4	143750	0.38	27231	-10675	145.76	1161.4	7.97	Si
SLV 10	143750	0.38	29951	-11741	145.76	1240.82	8.51	Si
SLV 9	143750	0.38	29951	-11741	145.76	1240.82	8.51	Si
SLV 8	143750	0.38	34922	-13690	145.76	1368.77	9.39	Si
SLV 7	143750	0.38	34922	-13690	145.76	1368.77	9.39	Si

Verifica dei meccanismi locali di collasso con analisi cinematica lineare

forza di aggancio al piano = 0 quota mezzeria = 6.125 Wa = 0.05 Ta = 0.0752

Comb.	N top	N base	V orto	α0	M*	e*	a0*	aLim	Verifica
SLV 12	-9637	-18516	-235	0.022	1177.8	0.952	0.34208	9.97238	No
SLV 11	-9637	-18516	-235	0.022	1177.8	0.952	0.34208	9.97238	No
SLV 5	-9076	-8665	218	0.023	1120.8	0.949	0.354	9.97238	No
SLV 6	-9076	-8665	218	0.023	1120.8	0.949	0.354	9.97238	No
SLV 2	-7886	-7687	171	0.026	1000.1	0.944	0.403	11.26714	No
SLV 1	-7886	-7687	171	0.026	1000.1	0.944	0.403	11.26714	No
SLV 15	-10827	-19494	-188	0.028	1298.7	0.956	0.42575	11.26714	No
SLV 16	-10827	-19494	-188	0.028	1298.7	0.956	0.42575	11.26714	No
SLV 7	-8723	-15598	-162	0.028	1085	0.948	0.43207	9.97238	No
SLV 8	-8723	-15598	-162	0.028	1085	0.948	0.43207	9.97238	No

Tabella dei coefficienti di sicurezza minimi

Stato limite	Coeff.s.	Comb.	Verifica
PF_SLU	2.599	SLU 83	Si
V_SLU	4.286	SLU 83	Si
PF_SLV	2.674	SLV 11	Si
V_SLV	1.24	SLV 9	Si
PFFP_SLV	7.389	SLV 1	Si
R_SLV	0.034	SLV 11	No

Maschio 135

Verifiche condotte secondo D.M. 17-01-18 (N.T.C.)

Dati geometrici

X ini.	Y ini.	X fin.	Y fin.	Quota i.	Quota.s	l	Sp.	h netta	h ini.	h fin.	a	a.s.,sx	a.s.,dx
-19.443	1.046	-24.643	1.046	L4	L5	5.2	0.28	3.55	3.55	3.55			

Caratteristiche del materiale

(Circolare 7 21-01-19 C8.5.I) Muratura in mattoni pieni e malta di calce LC2_Corti

fb	fk	fvk0	fmedio	τ0	fv0	μ	ϕ	fv,lim	E	G	FC
600000			345000	9000	20000	0.58	0.77	32500	320000000	128000000	1.2

Verifica a pressoflessione nel piano secondo D.M. 17-01-18 NTC §7.8.2.2.1 in combinazioni non sismiche, γM = 3

Comb.	Quota	N	M	σ0	Mu	c.s.	Verifica
SLU 81	4.35	-68468	-5529.3	47027	75244.18	13.608	Si
SLU 81	6.45	-63395	-9572.82	43542	76719.47	8.014	Si
SLU 35	4.35	-58925	-5348.7	40472	77083.99	14.412	Si
SLU 35	6.45	-55192	-9362.88	37908	76717.22	8.194	Si
SLU 80	4.35	-68831	-5991.31	47276	75095.39	12.534	Si
SLU 80	6.45	-63354	-9557.03	43514	76726.79	8.028	Si
SLU 74	4.35	-68500	-5591.45	47048	75231.56	13.455	Si
SLU 74	6.45	-63067	-9525.96	43317	76775.93	8.06	Si
SLU 41	4.35	-58893	-5286.55	40450	77083.45	14.581	Si
SLU 41	6.45	-55520	-9409.75	38133	76773.86	8.159	Si
SLU 78	4.35	-69685	-6069.43	47862	74722.66	12.311	Si
SLU 78	6.45	-64256	-9814.43	44134	76548.51	7.8	Si
SLU 79	4.35	-69163	-5838.54	47504	74954.45	12.838	Si
SLU 79	6.45	-63653	-9775.33	43719	76671.55	7.843	Si
SLU 84	4.35	-69654	-6007.28	47841	74736.92	12.441	Si
SLU 84	6.45	-64584	-9861.29	44358	76474.97	7.755	Si
SLU 77	4.35	-70017	-5916.67	48090	74569.32	12.603	Si
SLU 77	6.45	-64556	-10032.73	44339	76481.4	7.623	Si
SLU 83	4.35	-69985	-5854.52	48068	74584.02	12.74	Si
SLU 83	6.45	-64884	-10079.6	44564	76403.55	7.58	Si

Verifica a pressoflessione nel piano secondo D.M. 17-01-18 NTC §7.8.2.2.1 in combinazioni sismiche, γM = 2

Comb.	Quota	N	M	σ0	Mu	c.s.	Verifica
SLV 14	4.35	-38772	-28288.47	26630	78833.84	2.787	Si
SLV 14	6.45	-30864	3868.29	21199	66322.72	17.145	Si
SLV 4	4.35	-55102	21472.68	37846	98887.44	4.605	Si
SLV 4	6.45	-53526	-14704.25	36763	97291.74	6.617	Si
SLV 9	4.35	-43392	-17602.09	29803	85297.67	4.846	Si
SLV 9	6.45	-36447	7096.61	25033	75345.23	10.617	Si
SLV 3	4.35	-55102	21472.68	37846	98887.44	4.605	Si

Comb.	Quota	N	M	σ0	Mu	c.s.	Verifica
SLV 3	6.45	-53526	-14704.25	36763	97291.74	6.617	Si
SLV 10	4.35	-43392	-17602.09	29803	85297.67	4.846	Si
SLV 10	6.45	-36447	7096.61	25033	75345.23	10.617	Si
SLV 8	4.35	-50482	10786.3	34673	94004.94	8.715	Si
SLV 8	6.45	-47943	-17932.56	32929	91056.06	5.078	Si
SLV 13	4.35	-38772	-28288.47	26630	78833.84	2.787	Si
SLV 13	6.45	-30864	3868.29	21199	66322.72	17.145	Si
SLV 7	4.35	-50482	10786.3	34673	94004.94	8.715	Si
SLV 7	6.45	-47943	-17932.56	32929	91056.06	5.078	Si
SLV 15	4.35	-39494	-23851.09	27126	79885.84	3.349	Si
SLV 15	6.45	-32413	-2546.24	22262	68917.12	27.066	Si
SLV 16	4.35	-39494	-23851.09	27126	79885.84	3.349	Si
SLV 16	6.45	-32413	-2546.24	22262	68917.12	27.066	Si

Verifica a taglio nel piano secondo D.M. 17-01-18 (N.T.C.) §7.8.2.2.2 con rottura per scorrimento in combinazioni non sismiche, γM = 3

Comb.	Quota	N	V par	M	σ0	σN	l'	fvd	Vt scorr.	Vt fess.diag.	Vt,lim	c.s.	Verifica
SLU 40	4.35	-57045	5131	-5114.1		39181	5.1998	10780	15695			3.06	Si
SLU 40	6.45	-53731	5152	-8684.67		36904	5.1998	10476	15253			2.96	Si
SLU 41	4.35	-58893	5407	-5286.55		40450	5.1998	10833	15773			2.92	Si
SLU 41	6.45	-55520	5402	-9409.75		38133	5.1998	10640	15491			2.87	Si
SLU 84	4.35	-69654	5479	-6007.28		47841	5.1998	10833	15773			2.88	Si
SLU 84	6.45	-64584	5499	-9861.29		44358	5.1998	10833	15773			2.87	Si
SLU 82	4.35	-68137	5393	-5682.07		46799	5.1998	10833	15773			2.92	Si
SLU 82	6.45	-63095	5414	-9354.52		43336	5.1998	10833	15773			2.91	Si
SLU 83	4.35	-69985	5669	-5854.52		48068	5.1998	10833	15773			2.78	Si
SLU 83	6.45	-64884	5664	-10079.6		44564	5.1998	10833	15773			2.78	Si
SLU 74	4.35	-68500	5269	-5591.45		47048	5.1998	10833	15773			2.99	Si
SLU 74	6.45	-63067	5264	-9525.96		43317	5.1998	10833	15773			3	Si
SLU 39	4.35	-57376	5321	-4961.33		39408	5.1998	10810	15739			2.96	Si
SLU 39	6.45	-54031	5317	-8902.97		37110	5.1998	10504	15293			2.88	Si
SLU 81	4.35	-68468	5584	-5529.3		47027	5.1998	10833	15773			2.82	Si
SLU 81	6.45	-63395	5578	-9572.82		43542	5.1998	10833	15773			2.83	Si
SLU 77	4.35	-70017	5355	-5916.67		48090	5.1998	10833	15773			2.95	Si
SLU 77	6.45	-64556	5349	-10032.73		44339	5.1998	10833	15773			2.95	Si
SLU 42	4.35	-58562	5216	-5439.31		40222	5.1998	10833	15773			3.02	Si
SLU 42	6.45	-55220	5237	-9191.45		37927	5.1998	10613	15451			2.95	Si

Verifica a taglio nel piano secondo D.M. 17-01-18 (N.T.C.) §7.8.2.2.2 con rottura per scorrimento in combinazioni sismiche, γM = 2

Comb.	Quota	N	V par	M	σ0	σN	l'	fvd	Vt scorr.	Vt fess.diag.	Vt,lim	c.s.	Verifica
SLV 8	4.35	-50482	10724	10786.3		34673	5.1998	15268	22229			2.07	Si
SLV 8	6.45	-47943	10612	-17932.56		32929	5.1998	14919	21722			2.05	Si
SLV 13	4.35	-38772	-17525	-28288.47		26630	5.1998	13659	19887			1.13	Si
SLV 13	6.45	-30864	-16925	3868.29		21199	5.1998	12573	18306			1.08	Si
SLV 2	4.35	-54380	22382	17035.3		37350	5.1998	15803	23009			1.03	Si
SLV 2	6.45	-51977	21727	-8289.72		35700	5.1998	15473	22528			1.04	Si
SLV 15	4.35	-39494	-16460	-23851.09		27126	5.1998	13759	20032			1.22	Si
SLV 15	6.45	-32413	-15811	-2546.24		22262	5.1998	12786	18616			1.18	Si
SLV 1	4.35	-54380	22382	17035.3		37350	5.1998	15803	23009			1.03	Si
SLV 1	6.45	-51977	21727	-8289.72		35700	5.1998	15473	22528			1.04	Si
SLV 14	4.35	-38772	-17525	-28288.47		26630	5.1998	13659	19887			1.13	Si
SLV 14	6.45	-30864	-16925	3868.29		21199	5.1998	12573	18306			1.08	Si
SLV 3	4.35	-55102	23448	21472.68		37846	5.1998	15903	23153			0.99	No, Vu<V
SLV 3	6.45	-53526	22841	-14704.25		36763	5.1998	15686	22838			1	No, Vu<V
SLV 16	4.35	-39494	-16460	-23851.09		27126	5.1998	13759	20032			1.22	Si
SLV 16	6.45	-32413	-15811	-2546.24		22262	5.1998	12786	18616			1.18	Si
SLV 4	4.35	-55102	23448	21472.68		37846	5.1998	15903	23153			0.99	No, Vu<V
SLV 4	6.45	-53526	22841	-14704.25		36763	5.1998	15686	22838			1	No, Vu<V
SLV 7	4.35	-50482	10724	10786.3		34673	5.1998	15268	22229			2.07	Si
SLV 7	6.45	-47943	10612	-17932.56		32929	5.1998	14919	21722			2.05	Si

Verifica a pressoflessione fuori piano D.M. 17-01-18 (N.T.C.)

quota 6.125 Wa 0.05 denominatore 8 γM = 2

Comb.	fd	Sa	σ0	N	M	Mc	Coeff.s.	Verifica
SLV 14	143750	0.38	21590	-31434	541.36	3623.19	6.69	Si
SLV 13	143750	0.38	21590	-31434	541.36	3623.19	6.69	Si
SLV 15	143750	0.38	22764	-33143	541.36	3775.55	6.97	Si
SLV 16	143750	0.38	22764	-33143	541.36	3775.55	6.97	Si
SLV 10	143750	0.38	25430	-37025	541.36	4104.73	7.58	Si
SLV 9	143750	0.38	25430	-37025	541.36	4104.73	7.58	Si
SLV 11	143750	0.38	29342	-42720	541.36	4544.61	8.39	Si
SLV 12	143750	0.38	29342	-42720	541.36	4544.61	8.39	Si
SLV 5	143750	0.38	29895	-43526	541.36	4602.74	8.5	Si
SLV 6	143750	0.38	29895	-43526	541.36	4602.74	8.5	Si

Verifica dei meccanismi locali di collasso con analisi cinematica lineare

forza di aggancio al piano = 0 quota mezzeria = 6.125 Wa = 0.05 Ta = 0.0752

Comb.	N top	N base	V orto	α0	M*	e*	a0*	aLim	Verifica
SLV 10	-35329	-43392	450	0.033	4327.2	0.951	0.50061	9.97238	No
SLV 9	-35329	-43392	450	0.033	4327.2	0.951	0.50061	9.97238	No
SLV 7	-38841	-50482	-448	0.033	4684	0.954	0.50798	9.97238	No
SLV 8	-38841	-50482	-448	0.033	4684	0.954	0.50798	9.97238	No
SLV 12	-35810	-45800	-406	0.034	4376.1	0.952	0.51835	9.97238	No
SLV 11	-35810	-45800	-406	0.034	4376.1	0.952	0.51835	9.97238	No
SLV 5	-38360	-48074	408	0.034	4635.1	0.954	0.5211	9.97238	No
SLV 6	-38360	-48074	408	0.034	4635.1	0.954	0.5211	9.97238	No
SLV 3	-42208	-55102	-197	0.039	5026.3	0.957	0.5944	11.26714	No
SLV 4	-42208	-55102	-197	0.039	5026.3	0.957	0.5944	11.26714	No

Tabella dei coefficienti di sicurezza minimi

Stato limite	Coeff.s.	Comb.	Verifica
PF_SLU	7.58	SLU 83	Si
V_SLU	2.782	SLU 83	Si
PF_SLV	2.787	SLV 13	Si
V_SLV	0.987	SLV 3	No
PFFP_SLV	6.693	SLV 13	Si
R_SLV	0.05	SLV 9	No

Maschio 136

Verifiche condotte secondo D.M. 17-01-18 (N.T.C.)

Dati geometrici

X ini.	Y ini.	X fin.	Y fin.	Quota i.	Quota.s	l	Sp.	h netta	h ini.	h fin.	a	a.s.,sx	a.s.,dx
-14.853	1.046	-18.643	1.046	L4	L5	3.79	0.28	3.55	3.55	3.55			

Caratteristiche del materiale

(Circolare 7 21-01-19 C8.5.I) Muratura in mattoni pieni e malta di calce LC2_Corti

fb	fk	fvk0	fmedio	τ0	fv0	μ	ϕ	fv,lim	E	G	FC
600000			345000	9000	20000	0.58	0.77	32500	320000000	128000000	1.2

Verifica a pressoflessione nel piano secondo D.M. 17-01-18 NTC §7.8.2.2.1 in combinazioni non sismiche, γM = 3

Comb.	Quota	N	M	σ0	Mu	c.s.	Verifica
SLU 82	4.35	-62778	-1777.92	59153	32578.64	18.324	Si
SLU 82	6.45	-58381	-1102.64	55010	35924.07	32.58	Si
SLU 84	4.35	-64558	-1919.2	60830	30983.4	16.144	Si
SLU 84	6.45	-60168	-1205.53	56693	34666.63	28.756	Si
SLU 75	4.35	-62856	-1744.18	59227	32511.16	18.64	Si
SLU 75	6.45	-58405	-1293.16	55033	35907.68	27.767	Si
SLU 74	4.35	-63230	-1951.45	59579	32186.21	16.494	Si
SLU 74	6.45	-58624	-1283.44	55238	35761.3	27.864	Si
SLU 83	4.35	-64932	-2126.47	61182	30630.55	14.404	Si
SLU 83	6.45	-60386	-1195.8	56899	34503.38	28.854	Si
SLU 81	4.35	-63152	-1985.19	59505	32254.98	16.248	Si
SLU 81	6.45	-58599	-1092.92	55215	35777.92	32.736	Si
SLU 77	4.35	-65010	-2092.73	61256	30555.66	14.601	Si
SLU 77	6.45	-60411	-1386.32	56922	34484.82	24.875	Si
SLU 78	4.35	-64636	-1885.46	60904	30909.79	16.394	Si
SLU 78	6.45	-60193	-1396.05	56717	34648.31	24.819	Si
SLU 79	4.35	-64172	-2115.38	60466	31341.03	14.816	Si
SLU 79	6.45	-59567	-1307.77	56128	35104.77	26.843	Si
SLU 80	4.35	-63798	-1908.12	60114	31681.42	16.604	Si
SLU 80	6.45	-59349	-1317.5	55922	35260.19	26.763	Si

Verifica a pressoflessione nel piano secondo D.M. 17-01-18 NTC §7.8.2.2.1 in combinazioni sismiche, γM = 2

Comb.	Quota	N	M	σ0	Mu	c.s.	Verifica
SLV 13	4.35	-42991	-22179.24	40509	54463.79	2.456	Si
SLV 13	6.45	-38895	15944.27	36649	51603.17	3.236	Si
SLV 1	4.35	-35909	16196.66	33835	49208.19	3.038	Si
SLV 1	6.45	-33578	-12956.49	31639	47157.65	3.64	Si
SLV 15	4.35	-48879	-18492.23	46057	57716.95	3.121	Si
SLV 15	6.45	-43962	11198.87	41423	55069.72	4.917	Si
SLV 2	4.35	-35909	16196.66	33835	49208.19	3.038	Si
SLV 2	6.45	-33578	-12956.49	31639	47157.65	3.64	Si
SLV 3	4.35	-41797	19883.67	39383	53680.24	2.7	Si
SLV 3	6.45	-38644	-17701.9	36413	51411.66	2.904	Si
SLV 9	4.35	-33643	-13049.19	31700	47217.29	3.618	Si
SLV 9	6.45	-31124	11365.31	29326	44827.19	3.944	Si
SLV 4	4.35	-41797	19883.67	39383	53680.24	2.7	Si
SLV 4	6.45	-38644	-17701.9	36413	51411.66	2.904	Si
SLV 14	4.35	-42991	-22179.24	40509	54463.79	2.456	Si
SLV 14	6.45	-38895	15944.27	36649	51603.17	3.236	Si
SLV 16	4.35	-48879	-18492.23	46057	57716.95	3.121	Si
SLV 16	6.45	-43962	11198.87	41423	55069.72	4.917	Si
SLV 10	4.35	-33643	-13049.19	31700	47217.29	3.618	Si
SLV 10	6.45	-31124	11365.31	29326	44827.19	3.944	Si

Verifica a taglio nel piano secondo D.M. 17-01-18 (N.T.C.) §7.8.2.2.2 con rottura per scorrimento in combinazioni non sismiche, γM = 3

Comb.	Quota	N	V par	M	σ0	σN	l'	fvd	Vt scorr.	Vt fess.diag.	Vt,lim	c.s.	Verifica
SLU 68	4.35	-55843	670	-1273.13		52618	3.7903	10833	11497			17.15	Si
SLU 68	6.45	-51336	671	-1242.3		48372	3.7903	10833	11497			17.14	Si
SLU 49	4.35	-52499	707	-1119.64		49467	3.7903	10833	11497			16.26	Si
SLU 49	6.45	-47915	707	-1512.19		45148	3.7903	10833	11497			16.25	Si
SLU 65	4.35	-54063	683	-1131.85		50941	3.7903	10833	11497			16.84	Si
SLU 65	6.45	-49549	683	-1139.42		46688	3.7903	10833	11497			16.82	Si
SLU 55	4.35	-55557	765	-1218.35		52349	3.7903	10833	11497			15.02	Si
SLU 55	6.45	-51219	766	-1316.04		48261	3.7903	10833	11497			15.01	Si
SLU 52	4.35	-53777	778	-1077.07		50672	3.7903	10833	11497			14.78	Si
SLU 52	6.45	-49432	779	-1213.15		46577	3.7903	10833	11497			14.77	Si
SLU 44	4.35	-47851	832	-721.55		45088	3.7903	10833	11497			13.81	Si
SLU 44	6.45	-43352	833	-1234.36		40848	3.7903	10833	11497			13.8	Si
SLU 5	4.35	-40083	676	-724.81		37768	3.7903	10591	11240			16.62	Si
SLU 5	6.45	-36685	677	-1031.09		34566	3.7903	10164	10787			15.93	Si
SLU 46	4.35	-50719	719	-978.35		47790	3.7903	10833	11497			15.98	Si
SLU 46	6.45	-46128	720	-1409.3		43464	3.7903	10833	11497			15.97	Si
SLU 47	4.35	-49631	820	-862.83		46765	3.7903	10833	11497			14.02	Si

Comb.	Quota	N	V par	M	σ0	σN	l'	fvd	Vt scorr.	Vt fess.diag.	Vt,lim	c.s.	Verifica
SLU 47	6.45	-45139	821	-1337.24		42532	3.7903	10833	11497			14.01	Si
SLU 2	4.35	-38303	689	-583.53		36091	3.7903	10368	11003			15.97	Si
SLU 2	6.45	-34898	690	-928.21		32883	3.7903	9940	10549			15.3	Si

Verifica a taglio nel piano secondo D.M. 17-01-18 (N.T.C.) §7.8.2.2.2 con rottura per scorrimento in combinazioni sismiche, γM = 2

Comb.	Quota	N	V par	M	σ0	σN	l'	fvd	Vt scorr.	Vt fess.diag.	Vt,lim	c.s.	Verifica
SLV 3	4.35	-41797	19039	19883.67		39383	3.7903	16210	17203			0.9	No, Vu<V
SLV 3	6.45	-38644	18639	-17701.9		36413	3.7903	15616	16573			0.89	No, Vu<V
SLV 1	4.35	-35909	15742	16196.66		33835	3.7903	15100	16026			1.02	Si
SLV 1	6.45	-33578	15442	-12956.49		31639	3.7903	14661	15560			1.01	Si
SLV 10	4.35	-33643	-10389	-13049.19		31700	3.7903	14673	15573			1.5	Si
SLV 10	6.45	-31124	-10118	11365.31		29326	3.7903	14199	15069			1.49	Si
SLV 13	4.35	-42991	-18541	-22179.24		40509	3.7903	16250	17246			0.93	No, Vu<V
SLV 13	6.45	-38895	-18141	15944.27		36649	3.7903	15663	16623			0.92	No, Vu<V
SLV 4	4.35	-41797	19039	19883.67		39383	3.7903	16210	17203			0.9	No, Vu<V
SLV 4	6.45	-38644	18639	-17701.9		36413	3.7903	15616	16573			0.89	No, Vu<V
SLV 15	4.35	-48879	-15244	-18492.23		46057	3.7903	16250	17246			1.13	Si
SLV 15	6.45	-43962	-14944	11198.87		41423	3.7903	16250	17246			1.15	Si
SLV 16	4.35	-48879	-15244	-18492.23		46057	3.7903	16250	17246			1.13	Si
SLV 16	6.45	-43962	-14944	11198.87		41423	3.7903	16250	17246			1.15	Si
SLV 9	4.35	-33643	-10389	-13049.19		31700	3.7903	14673	15573			1.5	Si
SLV 9	6.45	-31124	-10118	11365.31		29326	3.7903	14199	15069			1.49	Si
SLV 14	4.35	-42991	-18541	-22179.24		40509	3.7903	16250	17246			0.93	No, Vu<V
SLV 14	6.45	-38895	-18141	15944.27		36649	3.7903	15663	16623			0.92	No, Vu<V
SLV 2	4.35	-35909	15742	16196.66		33835	3.7903	15100	16026			1.02	Si
SLV 2	6.45	-33578	15442	-12956.49		31639	3.7903	14661	15560			1.01	Si

Verifica a pressoflessione fuori piano D.M. 17-01-18 (N.T.C.)

quota 6.125 Wa 0.05 denominatore 8 γM = 2

Comb.	fd	Sa	σ0	N	M	Mc	Coeff.s.	Verifica
SLV 5	143750	0.38	28659	-30415	394.61	3259.37	8.26	Si
SLV 6	143750	0.38	28659	-30415	394.61	3259.37	8.26	Si
SLV 9	143750	0.38	30081	-31925	394.61	3369.13	8.54	Si
SLV 10	143750	0.38	30081	-31925	394.61	3369.13	8.54	Si
SLV 2	143750	0.38	32537	-34531	394.61	3547	8.99	Si
SLV 1	143750	0.38	32537	-34531	394.61	3547	8.99	Si
SLV 14	143750	0.38	37279	-39563	394.61	3848.99	9.75	Si
SLV 13	143750	0.38	37279	-39563	394.61	3848.99	9.75	Si
SLV 4	143750	0.38	37283	-39568	394.61	3849.27	9.75	Si
SLV 3	143750	0.38	37283	-39568	394.61	3849.27	9.75	Si

Verifica dei meccanismi locali di collasso con analisi cinematica lineare

forza di aggancio al piano = 0 quota mezzeria = 6.125 Wa = 0.05 Ta = 0.0752

Comb.	N top	N base	V orto	α0	M*	e*	a0*	aLim	Verifica
SLV 9	-23027	-33643	303	0.033	2877.6	0.947	0.50689	9.97238	No
SLV 10	-23027	-33643	303	0.033	2877.6	0.947	0.50689	9.97238	No
SLV 6	-24691	-31518	306	0.033	3046.5	0.95	0.50956	9.97238	No
SLV 5	-24691	-31518	306	0.033	3046.5	0.95	0.50956	9.97238	No
SLV 12	-38188	-53270	-306	0.035	4418.5	0.964	0.53231	9.97238	No
SLV 11	-38188	-53270	-306	0.035	4418.5	0.964	0.53231	9.97238	No
SLV 7	-39852	-51145	-302	0.036	4587.9	0.965	0.53515	9.97238	No
SLV 8	-39852	-51145	-302	0.036	4587.9	0.965	0.53515	9.97238	No
SLV 3	-36487	-41797	-86	0.041	4245.5	0.963	0.61369	11.26714	No
SLV 4	-36487	-41797	-86	0.041	4245.5	0.963	0.61369	11.26714	No

Tabella dei coefficienti di sicurezza minimi

Stato limite	Coeff.s.	Comb.	Verifica
PF_SLU	14.404	SLU 83	Si
V_SLU	13.802	SLU 44	Si
PF_SLV	2.456	SLV 13	Si
V_SLV	0.889	SLV 3	No
PFFP_SLV	8.26	SLV 5	Si
R_SLV	0.051	SLV 9	No

Maschio 137

Verifiche condotte secondo D.M. 17-01-18 (N.T.C.)

Dati geometrici

X ini.	Y ini.	X fin.	Y fin.	Quota i.	Quota.s	l	Sp.	h netta	h ini.	h fin.	a	a.s.,sx	a.s.,dx
-13.543	1.046	-14.053	1.046	L4	L5	0.51	0.28	3.55	3.55	3.55			

Caratteristiche del materiale

(Circolare 7 21-01-19 C8.5.I) Muratura in mattoni pieni e malta di calce LC2_Corti

fb	fk	fvk0	fmedio	τ0	fv0	μ	ϕ	fv,lim	E	G	FC
600000			345000	9000	20000	0.58	0.77	32500	320000000	128000000	1.2

Verifica a pressoflessione nel piano secondo D.M. 17-01-18 NTC §7.8.2.2.1 in combinazioni non sismiche, γM = 3

Comb.	Quota	N	M	σ0	Mu	c.s.	Verifica
SLU 74	4.35	-10727	-118.79	75146	211.9	1.784	Si
SLU 74	6.45	-10465	110.14	73313	266.75	2.422	Si
SLU 75	4.35	-10668	-113.51	74733	224.53	1.978	Si
SLU 75	6.45	-10385	105.13	72754	282.88	2.691	Si
SLU 80	4.35	-10833	-123.5	75891	188.72	1.528	Si
SLU 80	6.45	-10565	115.37	74013	246.15	2.134	Si
SLU 83	4.35	-11010	-129.46	77130	149.14	1.152	Si

Comb.	Quota	N	M	σ0	Mu	c.s.	Verifica
SLU 83	6.45	-10820	117.66	75799	191.63	1.629	Si
SLU 84	4.35	-10951	-124.18	76716	162.5	1.309	Si
SLU 84	6.45	-10740	112.65	75240	209	1.855	Si
SLU 78	4.35	-10979	-122.78	76912	156.21	1.272	Si
SLU 78	6.45	-10707	115	75005	216.23	1.88	Si
SLU 82	4.35	-10640	-114.91	74537	230.44	2.005	Si
SLU 82	6.45	-10419	102.78	72989	276.13	2.687	Si
SLU 79	4.35	-10892	-128.78	76305	175.66	1.364	Si
SLU 79	6.45	-10645	120.38	74572	229.39	1.906	Si
SLU 77	4.35	-11038	-128.06	77325	142.77	1.115	Si
SLU 77	6.45	-10787	120	75564	198.97	1.658	Si
SLU 81	4.35	-10699	-120.19	74951	217.88	1.813	Si
SLU 81	6.45	-10499	107.79	73548	259.88	2.411	Si

Verifica a pressoflessione nel piano secondo D.M. 17-01-18 NTC §7.8.2.2.1 in combinazioni sismiche, γM = 2

Comb.	Quota	N	M	σ0	Mu	c.s.	Verifica
SLV 2	4.35	-5092	1038.37	35673	919.07	0.885	No, M>Mu
SLV 2	6.45	-5730	-861.96	40138	980.74	1.138	Si
SLV 4	4.35	-7218	1183.64	50567	1078.51	0.911	No, M>Mu
SLV 4	6.45	-5913	-1063.8	41426	996.31	0.937	No, M>Mu
SLV 15	4.35	-9294	-1172.96	65108	1106.71	0.944	No, M>Mu
SLV 15	6.45	-8024	989.47	56210	1104.41	1.116	Si
SLV 13	4.35	-7168	-1318.22	50214	1076.26	0.816	No, M>Mu
SLV 13	6.45	-7840	1191.3	54922	1100.17	0.924	No, M>Mu
SLV 14	4.35	-7168	-1318.22	50214	1076.26	0.816	No, M>Mu
SLV 14	6.45	-7840	1191.3	54922	1100.17	0.924	No, M>Mu
SLV 16	4.35	-9294	-1172.96	65108	1106.71	0.944	No, M>Mu
SLV 16	6.45	-8024	989.47	56210	1104.41	1.116	Si
SLV 1	4.35	-5092	1038.37	35673	919.07	0.885	No, M>Mu
SLV 1	6.45	-5730	-861.96	40138	980.74	1.138	Si
SLV 9	4.35	-3961	-662.89	27748	780.37	1.177	Si
SLV 9	6.45	-6887	708.14	48245	1062.35	1.5	Si
SLV 10	4.35	-3961	-662.89	27748	780.37	1.177	Si
SLV 10	6.45	-6887	708.14	48245	1062.35	1.5	Si
SLV 3	4.35	-7218	1183.64	50567	1078.51	0.911	No, M>Mu
SLV 3	6.45	-5913	-1063.8	41426	996.31	0.937	No, M>Mu

Verifica a taglio nel piano secondo D.M. 17-01-18 (N.T.C.) §7.8.2.2.2 con rottura per scorrimento in combinazioni non sismiche, γM = 3

Comb.	Quota	N	V par	M	σ0	σN	I'	fvd	Vt scorr.	Vt fess.diag.	Vt,lim	c.s.	Verifica
SLU 37	4.35	-9255	-138	-122.8		64838	0.5098	10833	1546			11.22	Si
SLU 37	6.45	-9183	-115	113.63		64332	0.5098	10833	1546			13.48	Si
SLU 84	4.35	-10951	-142	-124.18		76716	0.5098	10833	1546			10.9	Si
SLU 84	6.45	-10740	-113	112.65		75240	0.5098	10833	1546			13.67	Si
SLU 78	4.35	-10979	-138	-122.78		76912	0.5098	10833	1546			11.21	Si
SLU 78	6.45	-10707	-114	115		75005	0.5098	10833	1546			13.54	Si
SLU 41	4.35	-9373	-141	-123.48		65663	0.5098	10833	1546			10.96	Si
SLU 41	6.45	-9358	-113	110.9		65559	0.5098	10833	1546			13.68	Si
SLU 77	4.35	-11038	-144	-128.06		77325	0.5098	10833	1546			10.75	Si
SLU 77	6.45	-10787	-119	120		75564	0.5098	10833	1546			12.96	Si
SLU 35	4.35	-9401	-137	-122.08		65858	0.5098	10833	1546			11.27	Si
SLU 35	6.45	-9325	-114	113.25		65324	0.5098	10833	1546			13.55	Si
SLU 79	4.35	-10892	-145	-128.78		76305	0.5098	10833	1546			10.7	Si
SLU 79	6.45	-10645	-120	120.38		74572	0.5098	10833	1546			12.89	Si
SLU 83	4.35	-11010	-148	-129.46		77130	0.5098	10833	1546			10.46	Si
SLU 83	6.45	-10820	-118	117.66		75799	0.5098	10833	1546			13.07	Si
SLU 80	4.35	-10833	-139	-123.5		75891	0.5098	10833	1546			11.16	Si
SLU 80	6.45	-10565	-115	115.37		74013	0.5098	10833	1546			13.47	Si
SLU 81	4.35	-10699	-138	-120.19		74951	0.5098	10833	1546			11.17	Si
SLU 81	6.45	-10499	-109	107.79		73548	0.5098	10833	1546			14.2	Si

Verifica a taglio nel piano secondo D.M. 17-01-18 (N.T.C.) §7.8.2.2.2 con rottura per scorrimento in combinazioni sismiche, γM = 2

Comb.	Quota	N	V par	M	σ0	σN	I'	fvd	Vt scorr.	Vt fess.diag.	Vt,lim	c.s.	Verifica
SLV 13	4.35	-7168	-1056	-1318.22		120188	0.213	16250	969			0.92	No, Vu<V
SLV 13	6.45	-7840	-1022	1191.3		90655	0.3089	16250	1405			1.38	Si
SLV 10	4.35	-3961	-614	-662.89		53861	0.2626	16250	1195			1.95	Si
SLV 10	6.45	-6887	-577	708.14		53910	0.4562	16250	2076			3.6	Si
SLV 2	4.35	-5092	744	1038.37		118886	0.153	16250	696			0.94	No, Vu<V
SLV 2	6.45	-5730	746	-861.96		65294	0.3134	16250	1426			1.91	Si
SLV 9	4.35	-3961	-614	-662.89		53861	0.2626	16250	1195			1.95	Si
SLV 9	6.45	-6887	-577	708.14		53910	0.4562	16250	2076			3.6	Si
SLV 16	4.35	-9294	-895	-1172.96		85969	0.3861	16250	1757			1.96	Si
SLV 16	6.45	-8024	-872	989.47		72590	0.3948	16250	1796			2.06	Si
SLV 14	4.35	-7168	-1056	-1318.22		120188	0.213	16250	969			0.92	No, Vu<V
SLV 14	6.45	-7840	-1022	1191.3		90655	0.3089	16250	1405			1.38	Si
SLV 1	4.35	-5092	744	1038.37		118886	0.153	16250	696			0.94	No, Vu<V
SLV 1	6.45	-5730	746	-861.96		65294	0.3134	16250	1426			1.91	Si
SLV 4	4.35	-7218	905	1183.64		94505	0.2728	16250	1241			1.37	Si
SLV 4	6.45	-5913	896	-1063.8		93852	0.225	16250	1024			1.14	Si
SLV 3	4.35	-7218	905	1183.64		94505	0.2728	16250	1241			1.37	Si
SLV 3	6.45	-5913	896	-1063.8		93852	0.225	16250	1024			1.14	Si
SLV 15	4.35	-9294	-895	-1172.96		85969	0.3861	16250	1757			1.96	Si
SLV 15	6.45	-8024	-872	989.47		72590	0.3948	16250	1796			2.06	Si

Verifica a pressoflessione fuori piano D.M. 17-01-18 (N.T.C.)

quota 6.125 Wa 0.05 denominatore 8 γM = 2

Comb.	fd	Sa	σ0	N	M	Mc	Coeff.s.	Verifica
SLV 3	143750	0.38	41146	-5874	53.08	545.39	10.28	Si
SLV 4	143750	0.38	41146	-5874	53.08	545.39	10.28	Si
SLV 1	143750	0.38	41407	-5911	53.08	547.08	10.31	Si
SLV 2	143750	0.38	41407	-5911	53.08	547.08	10.31	Si

Comb.	fd	Sa	σ0	N	M	Mc	Coeff.s.	Verifica
SLV 7	143750	0.38	46200	-6595	53.08	574.18	10.82	Si
SLV 8	143750	0.38	46200	-6595	53.08	574.18	10.82	Si
SLV 6	143750	0.38	47068	-6719	53.08	578.29	10.9	Si
SLV 5	143750	0.38	47068	-6719	53.08	578.29	10.9	Si
SLV 12	143750	0.38	50791	-7250	53.08	593.11	11.17	Si
SLV 11	143750	0.38	50791	-7250	53.08	593.11	11.17	Si

Verifica dei meccanismi locali di collasso con analisi cinematica lineare

forza di aggancio al piano = 0 quota mezzeria = 6.125 Wa = 0.05 Ta = 0.0752

Comb.	N top	N base	V orto	α0	M*	e*	a0*	aLim	Verifica
SLV 14	-5470	-7168	6	0.041	628.3	0.966	0.62312	11.26714	No
SLV 13	-5470	-7168	6	0.041	628.3	0.966	0.62312	11.26714	No
SLV 16	-5557	-9294	1	0.042	637.1	0.966	0.6363	11.26714	No
SLV 15	-5557	-9294	1	0.042	637.1	0.966	0.6363	11.26714	No
SLV 10	-4002	-3961	11	0.041	478.9	0.956	0.62257	9.97238	No
SLV 9	-4002	-3961	11	0.041	478.9	0.956	0.62257	9.97238	No
SLV 12	-4290	-11048	-7	0.042	508.2	0.958	0.63223	9.97238	No
SLV 11	-4290	-11048	-7	0.042	508.2	0.958	0.63223	9.97238	No
SLV 4	-1649	-7218	-4	0.046	240.7	0.922	0.72834	11.26714	No
SLV 3	-1649	-7218	-4	0.046	240.7	0.922	0.72834	11.26714	No

Tabella dei coefficienti di sicurezza minimi

Stato limite	Coeff.s.	Comb.	Verifica
PF_SLU	1.115	SLU 77	Si
V_SLU	10.464	SLU 83	Si
PF_SLV	0.816	SLV 13	No
V_SLV	0.917	SLV 13	No
PFFP_SLV	10.275	SLV 3	Si
R_SLV	0.055	SLV 13	No

Maschio 138

Verifiche condotte secondo D.M. 17-01-18 (N.T.C.)

Dati geometrici

X ini.	Y ini.	X fin.	Y fin.	Quota i.	Quota.s	l	Sp.	h netta	h ini.	h fin.	a	a.s.,sx	a.s.,dx
-12.283	1.046	-12.543	1.046	L4	L5	0.261	0.28	3.55	3.55	3.55			

Caratteristiche del materiale

(Circolare 7 21-01-19 C8.5.I) Muratura in mattoni pieni e malta di calce LC2_Corti

fb	fk	fvk0	fmedio	τ0	fv0	μ	ϕ	fv,lim	E	G	FC
600000			345000	9000	20000	0.58	0.77	32500	320000000	128000000	1.2

Verifica a pressoflessione nel piano secondo D.M. 17-01-18 NTC §7.8.2.2.1 in combinazioni non sismiche, γM = 3

Comb.	Quota	N	M	σ0	Mu	c.s.	Verifica
SLU 80	4.35	-5541	-58.34	75955	48.76	0.836	No, M>Mu
SLU 80	6.85	-3110	-175.45	42631	193.09	1.101	Si
SLU 83	4.35	-5663	-57.74	77631	34.66	0.6	No, M>Mu
SLU 83	6.85	-3203	-180.4	43906	192.33	1.066	Si
SLU 78	4.35	-5611	-58.62	76917	40.74	0.695	No, M>Mu
SLU 78	6.85	-3156	-178.16	43262	192.76	1.082	Si
SLU 74	4.35	-5496	-55.69	75347	53.71	0.965	No, M>Mu
SLU 74	6.85	-3098	-174.73	42467	193.16	1.105	Si
SLU 84	4.35	-5629	-57.36	77168	38.62	0.673	No, M>Mu
SLU 84	6.85	-3181	-179.16	43601	192.55	1.075	Si
SLU 77	4.35	-5645	-59	77381	36.8	0.624	No, M>Mu
SLU 77	6.85	-3178	-179.4	43568	192.57	1.073	Si
SLU 81	4.35	-5515	-54.43	75598	51.68	0.949	No, M>Mu
SLU 81	6.85	-3123	-175.73	42805	193.01	1.098	Si
SLU 82	4.35	-5481	-54.05	75134	55.43	1.025	Si
SLU 82	6.85	-3100	-174.49	42499	193.15	1.107	Si
SLU 79	4.35	-5575	-58.71	76419	44.93	0.765	No, M>Mu
SLU 79	6.85	-3132	-176.69	42937	192.94	1.092	Si
SLU 75	4.35	-5463	-55.31	74884	57.43	1.038	Si
SLU 75	6.85	-3076	-173.49	42161	193.27	1.114	Si

Verifica a pressoflessione nel piano secondo D.M. 17-01-18 NTC §7.8.2.2.1 in combinazioni sismiche, γM = 2

Comb.	Quota	N	M	σ0	Mu	c.s.	Verifica
SLV 3	4.35	-3637	259.27	49861	280.45	1.082	Si
SLV 3	6.85	-3736	-227.21	51214	282.67	1.244	Si
SLV 1	4.35	-3048	248.29	41790	261.29	1.052	Si
SLV 1	6.85	-3359	-210.04	46047	272.66	1.298	Si
SLV 7	4.35	-4554	69.24	62425	290.13	4.19	Si
SLV 7	6.85	-3120	-174.56	42768	264.15	1.513	Si
SLV 8	4.35	-4554	69.24	62425	290.13	4.19	Si
SLV 8	6.85	-3120	-174.56	42768	264.15	1.513	Si
SLV 13	4.35	-3705	-331.28	50786	282	0.851	No, M>Mu
SLV 13	6.85	-342	-2.33	4693	42.89	18.386	Si
SLV 16	4.35	-4293	-320.3	58857	289.88	0.905	No, M>Mu
SLV 16	6.85	-719	-19.51	9860	86.13	4.415	Si
SLV 15	4.35	-4293	-320.3	58857	289.88	0.905	No, M>Mu
SLV 15	6.85	-719	-19.51	9860	86.13	4.415	Si
SLV 2	4.35	-3048	248.29	41790	261.29	1.052	Si
SLV 2	6.85	-3359	-210.04	46047	272.66	1.298	Si
SLV 14	4.35	-3705	-331.28	50786	282	0.851	No, M>Mu
SLV 14	6.85	-342	-2.33	4693	42.89	18.386	Si
SLV 4	4.35	-3637	259.27	49861	280.45	1.082	Si

Comb.	Quota	N	M	σ0	Mu	c.s.	Verifica
SLV 4	6.85	-3736	-227.21	51214	282.67	1.244	Si

Verifica a taglio nel piano secondo D.M. 17-01-18 (N.T.C.) §7.8.2.2.2 con rottura per scorrimento in combinazioni non sismiche, γM = 3

Comb.	Quota	N	V par	M	σ0	σN	l'	fvd	Vt scorr.	Vt fess.diag.	Vt,lim	c.s.	Verifica
SLU 77	4.35	-5645	-71	-59		77381	0.2605	10833	790			11.13	Si
SLU 77	6.85	-3178	287	-179.4		51257	0.2214	10833	672			2.34	Si
SLU 82	4.35	-5481	-66	-54.05		75134	0.2605	10833	790			12.01	Si
SLU 82	6.85	-3100	291	-174.49		49888	0.2219	10833	673			2.31	Si
SLU 81	4.35	-5515	-66	-54.43		75598	0.2605	10833	790			11.92	Si
SLU 81	6.85	-3123	293	-175.73		50245	0.222	10833	673			2.3	Si
SLU 74	4.35	-5496	-67	-55.69		75347	0.2605	10833	790			11.72	Si
SLU 74	6.85	-3098	284	-174.73		49932	0.2216	10833	672			2.37	Si
SLU 78	4.35	-5611	-71	-58.62		76917	0.2605	10833	790			11.2	Si
SLU 78	6.85	-3156	285	-178.16		50900	0.2214	10833	672			2.36	Si
SLU 75	4.35	-5463	-67	-55.31		74884	0.2605	10833	790			11.8	Si
SLU 75	6.85	-3076	282	-173.49		49576	0.2216	10833	672			2.38	Si
SLU 80	4.35	-5541	-70	-58.34		75955	0.2605	10833	790			11.28	Si
SLU 80	6.85	-3110	279	-175.45		50134	0.2215	10833	672			2.41	Si
SLU 79	4.35	-5575	-71	-58.71		76419	0.2605	10833	790			11.21	Si
SLU 79	6.85	-3132	281	-176.69		50491	0.2215	10833	672			2.4	Si
SLU 84	4.35	-5629	-69	-57.36		77168	0.2605	10833	790			11.39	Si
SLU 84	6.85	-3181	295	-179.16		51213	0.2218	10833	673			2.28	Si
SLU 83	4.35	-5663	-70	-57.74		77631	0.2605	10833	790			11.31	Si
SLU 83	6.85	-3203	296	-180.4		51569	0.2218	10833	673			2.27	Si

Verifica a taglio nel piano secondo D.M. 17-01-18 (N.T.C.) §7.8.2.2.2 con rottura per scorrimento in combinazioni sismiche, γM = 2

Comb.	Quota	N	V par	M	σ0	σN	l'	fvd	Vt scorr.	Vt fess.diag.	Vt,lim	c.s.	Verifica
SLV 3	4.35	-3637	277	259.27		73416	0.1769	16250	805			2.91	Si
SLV 3	6.85	-3736	1319	-227.21		64045	0.2083	16250	948			0.72	No, Vu<V
SLV 5	4.35	-2591	51	32.63		35523	0.2605	15438	1126			22.05	Si
SLV 5	6.85	-1863	725	-117.3		32956	0.2019	14925	844			1.16	Si
SLV 13	4.35	-3705	-364	-331.28		107987	0.1225	16250	557			1.53	Si
SLV 13	6.85	-342	-965	-2.33		4693	0.2605	9272	676			0.7	No, Vu<V
SLV 2	4.35	-3048	276	248.29		74345	0.1464	16250	666			2.41	Si
SLV 2	6.85	-3359	1432	-210.04		59038	0.2032	16250	925			0.65	No, Vu<V
SLV 4	4.35	-3637	277	259.27		73416	0.1769	16250	805			2.91	Si
SLV 4	6.85	-3736	1319	-227.21		64045	0.2083	16250	948			0.72	No, Vu<V
SLV 1	4.35	-3048	276	248.29		74345	0.1464	16250	666			2.41	Si
SLV 1	6.85	-3359	1432	-210.04		59038	0.2032	16250	925			0.65	No, Vu<V
SLV 6	4.35	-2591	51	32.63		35523	0.2605	15438	1126			22.05	Si
SLV 6	6.85	-1863	725	-117.3		32956	0.2019	14925	844			1.16	Si
SLV 15	4.35	-4293	-364	-320.3		91827	0.167	16250	760			2.09	Si
SLV 15	6.85	-719	-1078	-19.51		9860	0.2605	10305	752			0.7	No, Vu<V
SLV 14	4.35	-3705	-364	-331.28		107987	0.1225	16250	557			1.53	Si
SLV 14	6.85	-342	-965	-2.33		4693	0.2605	9272	676			0.7	No, Vu<V
SLV 16	4.35	-4293	-364	-320.3		91827	0.167	16250	760			2.09	Si
SLV 16	6.85	-719	-1078	-19.51		9860	0.2605	10305	752			0.7	No, Vu<V

Verifica a pressoflessione fuori piano D.M. 17-01-18 (N.T.C.)

quota 6.125 Wa 0.05 denominatore 8 γM = 2

Comb.	fd	Sa	σ0	N	M	Mc	Coeff.s.	Verifica
SLV 5	143750	0.38	32392	-2363	27.12	243.11	8.96	Si
SLV 6	143750	0.38	32392	-2363	27.12	243.11	8.96	Si
SLV 9	143750	0.38	35248	-2571	27.12	256.13	9.44	Si
SLV 10	143750	0.38	35248	-2571	27.12	256.13	9.44	Si
SLV 2	143750	0.38	38394	-2801	27.12	268.9	9.91	Si
SLV 1	143750	0.38	38394	-2801	27.12	268.9	9.91	Si
SLV 3	143750	0.38	46396	-3384	27.12	293.91	10.84	Si
SLV 4	143750	0.38	46396	-3384	27.12	293.91	10.84	Si
SLV 13	143750	0.38	47915	-3495	27.12	297.45	10.97	Si
SLV 14	143750	0.38	47915	-3495	27.12	297.45	10.97	Si

Verifica dei meccanismi locali di collasso con analisi cinematica lineare

forza di aggancio al piano = 0 quota mezzeria = 6.125 Wa = 0.05 Ta = 0.0752

Comb.	N top	N base	V orto	α0	M*	e*	a0*	aLim	Verifica
SLV 10	-1092	-2788	42	0.015	148.1	0.932	0.23077	9.97238	No
SLV 9	-1092	-2788	42	0.015	148.1	0.932	0.23077	9.97238	No
SLV 5	-1147	-2591	37	0.019	153.6	0.934	0.30063	9.97238	No
SLV 6	-1147	-2591	37	0.019	153.6	0.934	0.30063	9.97238	No
SLV 7	-1513	-4554	-42	0.02	190.7	0.945	0.315	9.97238	No
SLV 8	-1513	-4554	-42	0.02	190.7	0.945	0.315	9.97238	No
SLV 11	-1458	-4751	-37	0.023	185.2	0.944	0.3505	9.97238	No
SLV 12	-1458	-4751	-37	0.023	185.2	0.944	0.3505	9.97238	No
SLV 13	-1156	-3705	20	0.032	154.6	0.935	0.49439	11.26714	No
SLV 14	-1156	-3705	20	0.032	154.6	0.935	0.49439	11.26714	No

Tabella dei coefficienti di sicurezza minimi

Stato limite	Coeff.s.	Comb.	Verifica
PF_SLU	0.6	SLU 83	No
V_SLU	2.27	SLU 83	Si
PF_SLV	0.851	SLV 13	No
V_SLV	0.646	SLV 1	No
PFFP_SLV	8.963	SLV 5	Si
R_SLV	0.023	SLV 9	No

Maschio 139

Verifiche condotte secondo D.M. 17-01-18 (N.T.C.)

Dati geometrici

X ini.	Y ini.	X fin.	Y fin.	Quota i.	Quota.s	l	Sp.	h netta	h ini.	h fin.	a	a.s.,sx	a.s.,dx
-0.134	1.046	-11.163	1.046	L4	L5	11.029	0.28	3.55	3.55	3.55			

Caratteristiche del materiale

(Circolare 7 21-01-19 C8.5.I) Muratura in mattoni pieni e malta di calce LC2_Corti

fb	fk	fvk0	fmedio	τ0	fv0	μ	ϕ	fv,lim	E	G	FC
600000			345000	9000	20000	0.58	0.77	32500	320000000	128000000	1.2

Verifica a pressoflessione nel piano secondo D.M. 17-01-18 NTC §7.8.2.2.1 in combinazioni non sismiche, γM = 3

Comb.	Quota	N	M	σ0	Mu	c.s.	Verifica
SLU 79	4.35	-149799	24718.01	48508	334146.61	13.518	Si
SLU 79	6.85	-134369	44681.62	43511	345179	7.725	Si
SLU 74	4.35	-148297	24311.88	48022	335678.75	13.807	Si
SLU 74	6.85	-132926	43119.95	43044	345676.93	8.017	Si
SLU 84	4.35	-150584	26270.7	48762	333306.56	12.687	Si
SLU 84	6.85	-136509	44714.93	44205	344272.11	7.699	Si
SLU 78	4.35	-150589	25767.35	48764	333301.26	12.935	Si
SLU 78	6.85	-135756	45602.08	43961	344614.37	7.557	Si
SLU 77	4.35	-151736	25417.67	49135	332024.64	13.063	Si
SLU 77	6.85	-136347	45499.37	44152	344348.04	7.568	Si
SLU 82	4.35	-147146	25164.91	47649	336787.03	13.383	Si
SLU 82	6.85	-133088	42335.51	43097	345625.39	8.164	Si
SLU 76	4.35	-144449	24195.04	46776	339153.94	14.018	Si
SLU 76	6.85	-129962	42473.38	42085	346413.29	8.156	Si
SLU 83	4.35	-151731	25921.01	49134	332030.19	12.809	Si
SLU 83	6.85	-137101	44612.22	44396	343986.24	7.711	Si
SLU 75	4.35	-147150	24661.57	47651	336782.47	13.656	Si
SLU 75	6.85	-132334	43222.66	42853	345854.58	8.002	Si
SLU 80	4.35	-148652	25067.7	48137	335325.85	13.377	Si
SLU 80	6.85	-133777	44784.33	43320	345394.05	7.712	Si

Verifica a pressoflessione nel piano secondo D.M. 17-01-18 NTC §7.8.2.2.1 in combinazioni sismiche, γM = 2

Comb.	Quota	N	M	σ0	Mu	c.s.	Verifica
SLV 3	4.35	-97865	115540.07	31691	399705.4	3.459	Si
SLV 3	6.85	-82617	55076.41	26753	355837.74	6.461	Si
SLV 15	4.35	-114538	-70090.55	37090	439891.86	6.276	Si
SLV 15	6.85	-100292	10258.61	32477	406061.21	39.582	Si
SLV 8	4.35	-115901	71742.84	37531	442819.06	6.172	Si
SLV 8	6.85	-96808	52877.55	31349	396883.69	7.506	Si
SLV 4	4.35	-97865	115540.07	31691	399705.4	3.459	Si
SLV 4	6.85	-82617	55076.41	26753	355837.74	6.461	Si
SLV 13	4.35	-104080	-88239.26	33703	415635.01	4.71	Si
SLV 13	6.85	-93431	-1301.99	30255	387649.85	297.736	Si
SLV 1	4.35	-87407	97391.37	28304	370352.21	3.803	Si
SLV 1	6.85	-75755	43515.81	24531	333881.45	7.673	Si
SLV 7	4.35	-115901	71742.84	37531	442819.06	6.172	Si
SLV 7	6.85	-96808	52877.55	31349	396883.69	7.506	Si
SLV 16	4.35	-114538	-70090.55	37090	439891.86	6.276	Si
SLV 16	6.85	-100292	10258.61	32477	406061.21	39.582	Si
SLV 14	4.35	-104080	-88239.26	33703	415635.01	4.71	Si
SLV 14	6.85	-93431	-1301.99	30255	387649.85	297.736	Si
SLV 2	4.35	-87407	97391.37	28304	370352.21	3.803	Si
SLV 2	6.85	-75755	43515.81	24531	333881.45	7.673	Si

Verifica a taglio nel piano secondo D.M. 17-01-18 (N.T.C.) §7.8.2.2.2 con rottura per scorrimento in combinazioni non sismiche, γM = 3

Comb.	Quota	N	V par	M	σ0	σN	l'	fvd	Vt scorr.	Vt fess.diag.	Vt,lim	c.s.	Verifica
SLU 79	4.35	-149799	-7075	24718.01		48508	11.029	10833	33455			4.73	Si
SLU 79	6.85	-134369	-7090	44681.62		43511	11.029	10833	33455			4.72	Si
SLU 35	4.35	-128191	-6682	23846.36		41511	11.029	10833	33455			5.01	Si
SLU 35	6.85	-117277	-6697	40267.27		37977	11.029	10619	32793			4.9	Si
SLU 78	4.35	-150589	-7237	25767.35		48764	11.029	10833	33455			4.62	Si
SLU 78	6.85	-135756	-7287	45602.08		43961	11.029	10833	33455			4.59	Si
SLU 80	4.35	-148652	-7104	25067.7		48137	11.029	10833	33455			4.71	Si
SLU 80	6.85	-133777	-7154	44784.33		43320	11.029	10833	33455			4.68	Si
SLU 84	4.35	-150584	-7024	26270.7		48762	11.029	10833	33455			4.76	Si
SLU 84	6.85	-136509	-7078	44714.93		44205	11.029	10833	33455			4.73	Si
SLU 37	4.35	-126254	-6549	23146.7		40884	11.029	10833	33455			5.11	Si
SLU 37	6.85	-115298	-6564	39449.52		37336	11.029	10534	32529			4.96	Si
SLU 38	4.35	-125107	-6578	23496.39		40513	11.029	10833	33455			5.09	Si
SLU 38	6.85	-114707	-6628	39552.23		37145	11.029	10508	32451			4.9	Si
SLU 36	4.35	-127044	-6711	24196.04		41140	11.029	10833	33455			4.98	Si
SLU 36	6.85	-116685	-6761	40369.98		37785	11.029	10594	32714			4.84	Si
SLU 83	4.35	-151731	-6994	25921.01		49134	11.029	10833	33455			4.78	Si
SLU 83	6.85	-137101	-7014	44612.22		44396	11.029	10833	33455			4.77	Si
SLU 77	4.35	-151736	-7208	25417.67		49135	11.029	10833	33455			4.64	Si
SLU 77	6.85	-136347	-7223	45499.37		44152	11.029	10833	33455			4.63	Si

Verifica a taglio nel piano secondo D.M. 17-01-18 (N.T.C.) §7.8.2.2.2 con rottura per scorrimento in combinazioni sismiche, γM = 2

Comb.	Quota	N	V par	M	σ0	σN	l'	fvd	Vt scorr.	Vt fess.diag.	Vt,lim	c.s.	Verifica
SLV 1	4.35	-87407	41739	97391.37		28304	11.029	13994	43216			1.04	Si
SLV 1	6.85	-75755	39799	43515.81		24531	11.029	13240	40885			1.03	Si
SLV 14	4.35	-104080	-44769	-88239.26		33703	11.029	15074	46550			1.04	Si
SLV 14	6.85	-93431	-41472	-1301.99		30255	11.029	14384	44421			1.07	Si
SLV 11	4.35	-120903	-24001	16053.65		39151	11.029	16164	49915			2.08	Si
SLV 11	6.85	-102111	-25506	39432.21		33066	11.029	14946	46157			1.81	Si

Comb.	Quota	N	V par	M	σ0	σN	l'	fvd	Vt scorr.	Vt fess.diag.	Vt,lim	c.s.	Verifica
SLV 12	4.35	-120903	-24001	16053.65		39151	11.029	16164	49915			2.08	Si
SLV 12	6.85	-102111	-25506	39432.21		33066	11.029	14946	46157			1.81	Si
SLV 15	4.35	-114538	-49158	-70090.55		37090	11.029	15751	48642			0.99	No, Vu<V
SLV 15	6.85	-100292	-47232	10258.61		32477	11.029	14829	45793			0.97	No, Vu<V
SLV 3	4.35	-97865	37350	115540.07		31691	11.029	14672	45307			1.21	Si
SLV 3	6.85	-82617	34040	55076.41		26753	11.029	13684	42258			1.24	Si
SLV 13	4.35	-104080	-44769	-88239.26		33703	11.029	15074	46550			1.04	Si
SLV 13	6.85	-93431	-41472	-1301.99		30255	11.029	14384	44421			1.07	Si
SLV 4	4.35	-97865	37350	115540.07		31691	11.029	14672	45307			1.21	Si
SLV 4	6.85	-82617	34040	55076.41		26753	11.029	13684	42258			1.24	Si
SLV 16	4.35	-114538	-49158	-70090.55		37090	11.029	15751	48642			0.99	No, Vu<V
SLV 16	6.85	-100292	-47232	10258.61		32477	11.029	14829	45793			0.97	No, Vu<V
SLV 2	4.35	-87407	41739	97391.37		28304	11.029	13994	43216			1.04	Si
SLV 2	6.85	-75755	39799	43515.81		24531	11.029	13240	40885			1.03	Si

Verifica a pressoflessione fuori piano D.M. 17-01-18 (N.T.C.)

quota 6.125 Wa 0.05 denominatore 8 γM = 2

Comb.	fd	Sa	σ0	N	M	Mc	Coeff.s.	Verifica
SLV 5	143750	0.38	24116	-74474	1148.24	8368.47	7.29	Si
SLV 6	143750	0.38	24116	-74474	1148.24	8368.47	7.29	Si
SLV 9	143750	0.38	25629	-79145	1148.24	8756.19	7.63	Si
SLV 10	143750	0.38	25629	-79145	1148.24	8756.19	7.63	Si
SLV 1	143750	0.38	25713	-79405	1148.24	8777.28	7.64	Si
SLV 2	143750	0.38	25713	-79405	1148.24	8777.28	7.64	Si
SLV 3	143750	0.38	28594	-88302	1148.24	9469.3	8.25	Si
SLV 4	143750	0.38	28594	-88302	1148.24	9469.3	8.25	Si
SLV 14	143750	0.38	30755	-94975	1148.24	9949.75	8.67	Si
SLV 13	143750	0.38	30755	-94975	1148.24	9949.75	8.67	Si

Verifica dei meccanismi locali di collasso con analisi cinematica lineare

forza di aggancio al piano = 0 quota mezzeria = 6.125 Wa = 0.05 Ta = 0.0752

Comb.	N top	N base	V orto	α0	M*	e*	a0*	aLim	Verifica
SLV 10	-73895	-86044	1080	0.031	9072.8	0.951	0.47691	9.97238	No
SLV 9	-73895	-86044	1080	0.031	9072.8	0.951	0.47691	9.97238	No
SLV 5	-71057	-81042	1019	0.032	8784.6	0.949	0.48457	9.97238	No
SLV 6	-71057	-81042	1019	0.032	8784.6	0.949	0.48457	9.97238	No
SLV 8	-88487	-115901	-1068	0.033	10555.3	0.957	0.49418	9.97238	No
SLV 7	-88487	-115901	-1068	0.033	10555.3	0.957	0.49418	9.97238	No
SLV 11	-91325	-120903	-1008	0.033	10843.8	0.958	0.5056	9.97238	No
SLV 12	-91325	-120903	-1008	0.033	10843.8	0.958	0.5056	9.97238	No
SLV 14	-83307	-104080	419	0.039	10028.9	0.955	0.59537	11.26714	No
SLV 13	-83307	-104080	419	0.039	10028.9	0.955	0.59537	11.26714	No

Tabella dei coefficienti di sicurezza minimi

Stato limite	Coeff.s.	Comb.	Verifica
PF_SLU	7.557	SLU 78	Si
V_SLU	4.591	SLU 78	Si
PF_SLV	3.459	SLV 3	Si
V_SLV	0.97	SLV 15	No
PFFP_SLV	7.288	SLV 5	Si
R_SLV	0.048	SLV 9	No

Maschio 140

Verifiche condotte secondo D.M. 17-01-18 (N.T.C.)

Dati geometrici

X ini.	Y ini.	X fin.	Y fin.	Quota i.	Quota.s	l	Sp.	h netta	h ini.	h fin.	a	a.s.,sx	a.s.,dx
-11.893	3.334	-15.038	3.334	L4	L5	3.145	0.14	3.55	3.55	3.55			

Caratteristiche del materiale

(Circolare 7 21-01-19 C8.5.I) Muratura in mattoni pieni e malta di calce LC2_Corti

fb	fk	fvk0	fmedio	τ0	fv0	μ	ϕ	fv,lim	E	G	FC
600000			345000	9000	20000	0.58	0.77	32500	320000000	128000000	1.2

Verifica a pressoflessione nel piano secondo D.M. 17-01-18 NTC §7.8.2.2.1 in combinazioni non sismiche, γM = 3

Comb.	Quota	N	M	σ0	Mu	c.s.	Verifica
SLU 40	4.35	-13094	-40.56	29742	13072.16	322.269	Si
SLU 40	6.45	-12757	1750.81	28975	12924.01	7.382	Si
SLU 73	4.35	-14896	65.25	33834	13694.16	209.881	Si
SLU 73	6.45	-14035	1823.34	31877	13432.25	7.367	Si
SLU 76	4.35	-14872	60.58	33779	13687.59	225.928	Si
SLU 76	6.45	-14006	1814.02	31813	13422.49	7.399	Si
SLU 42	4.35	-13070	-45.23	29686	13061.71	288.808	Si
SLU 42	6.45	-12729	1741.5	28910	12911.06	7.414	Si
SLU 84	4.35	-15434	21.03	35055	13824.54	657.464	Si
SLU 84	6.45	-14715	1948.68	33423	13644.52	7.002	Si
SLU 81	4.35	-15463	26.76	35122	13830.99	516.76	Si
SLU 81	6.45	-14748	1958.35	33498	13653.79	6.972	Si
SLU 39	4.35	-13100	-39.49	29753	13074.31	331.091	Si
SLU 39	6.45	-12762	1751.16	28985	12926.08	7.381	Si
SLU 82	4.35	-15458	25.69	35111	13829.9	538.328	Si
SLU 82	6.45	-14744	1958	33488	13652.51	6.973	Si
SLU 41	4.35	-13075	-44.15	29697	13063.87	295.885	Si
SLU 41	6.45	-12733	1741.84	28921	12913.14	7.414	Si
SLU 83	4.35	-15439	22.1	35066	13825.65	625.555	Si
SLU 83	6.45	-14720	1949.03	33433	13645.81	7.001	Si

Verifica a pressoflessione nel piano secondo D.M. 17-01-18 NTC §7.8.2.2.1 in combinazioni sismiche, γM = 2

Comb.	Quota	N	M	σ0	Mu	c.s.	Verifica
SLV 13	4.35	-12358	-10609.91	28069	14968.11	1.411	Si
SLV 13	6.45	-7952	5027.49	18062	10655.59	2.119	Si
SLV 3	4.35	-8623	10829.78	19586	11385.5	1.051	Si
SLV 3	6.45	-11282	-2650.43	25625	14019.49	5.29	Si
SLV 8	4.35	2198	3350.91	0	0	0	No, Trazione
SLV 8	6.45	490	2231.72	0	0	0	No, Trazione
SLV 15	4.35	-4362	-10593.42	0	0	0	No, e>l/2
SLV 15	6.45	-959	6474.66	0	0	0	No, e>l/2
SLV 14	4.35	-12358	-10609.91	28069	14968.11	1.411	Si
SLV 14	6.45	-7952	5027.49	18062	10655.59	2.119	Si
SLV 11	4.35	3476	-3076.05	0	0	0	No, Trazione
SLV 11	6.45	3587	4969.24	0	0	0	No, Trazione
SLV 16	4.35	-4362	-10593.42	0	0	0	No, e>l/2
SLV 16	6.45	-959	6474.66	0	0	0	No, e>l/2
SLV 4	4.35	-8623	10829.78	19586	11385.5	1.051	Si
SLV 4	6.45	-11282	-2650.43	25625	14019.49	5.29	Si
SLV 12	4.35	3476	-3076.05	0	0	0	No, Trazione
SLV 12	6.45	3587	4969.24	0	0	0	No, Trazione
SLV 7	4.35	2198	3350.91	0	0	0	No, Trazione
SLV 7	6.45	490	2231.72	0	0	0	No, Trazione

Verifica a taglio nel piano secondo D.M. 17-01-18 (N.T.C.) §7.8.2.2.2 con rottura per scorrimento in combinazioni non sismiche, γM = 3

Comb.	Quota	N	V par	M	σ0	σN	I'	fvd	Vt scorr.	Vt fess.diag.	Vt,lim	c.s.	Verifica
SLU 83	4.35	-15439	326	22.1		35066	3.1448	10231	4504			13.84	Si
SLU 83	6.45	-14720	326	1949.03		33433	3.1448	10013	4409			13.51	Si
SLU 73	4.35	-14896	299	65.25		33834	3.1448	10067	4432			14.82	Si
SLU 73	6.45	-14035	300	1823.34		31877	3.1448	9806	4317			14.39	Si
SLU 82	4.35	-15458	326	25.69		35111	3.1448	10237	4507			13.82	Si
SLU 82	6.45	-14744	327	1958		33488	3.1448	10021	4412			13.49	Si
SLU 75	4.35	-15208	302	39.33		34541	3.1448	10161	4474			14.82	Si
SLU 75	6.45	-14361	303	1815.05		32618	3.1448	9905	4361			14.41	Si
SLU 84	4.35	-15434	326	21.03		35055	3.1448	10230	4504			13.84	Si
SLU 84	6.45	-14715	326	1948.68		33423	3.1448	10012	4408			13.5	Si
SLU 42	4.35	-13070	298	-45.23		29686	3.1448	9514	4189			14.04	Si
SLU 42	6.45	-12729	299	1741.5		28910	3.1448	9410	4143			13.85	Si
SLU 39	4.35	-13100	299	-39.49		29753	3.1448	9523	4193			14.02	Si
SLU 39	6.45	-12762	300	1751.16		28985	3.1448	9420	4148			13.84	Si
SLU 81	4.35	-15463	326	26.76		35122	3.1448	10239	4508			13.82	Si
SLU 81	6.45	-14748	327	1958.35		33498	3.1448	10022	4412			13.49	Si
SLU 40	4.35	-13094	299	-40.56		29742	3.1448	9521	4192			14.02	Si
SLU 40	6.45	-12757	300	1750.81		28975	3.1448	9419	4147			13.83	Si
SLU 41	4.35	-13075	298	-44.15		29697	3.1448	9515	4189			14.05	Si
SLU 41	6.45	-12733	299	1741.84		28921	3.1448	9412	4144			13.86	Si

Verifica a taglio nel piano secondo D.M. 17-01-18 (N.T.C.) §7.8.2.2.2 con rottura per scorrimento in combinazioni sismiche, γM = 2

Comb.	Quota	N	V par	M	σ0	σN	I'	fvd	Vt scorr.	Vt fess.diag.	Vt,lim	c.s.	Verifica
SLV 8	4.35	2198	2748	3350.91		0	0	8333	0			0	No, Vu<V
SLV 8	6.45	490	3174	2231.72		0	0	8333	0			0	No, Vu<V
SLV 12	4.35	3476	-2934	-3076.05		0	0	8333	0			0	No, Vu<V
SLV 12	6.45	3587	-2403	4969.24		0	0	8333	0			0	No, Vu<V
SLV 3	4.35	-8623	9573	10829.78		64871	0.9495	16250	2160			0.23	No, Vu<V
SLV 3	6.45	-11282	9541	-2650.43		25625	3.1448	13458	5925			0.62	No, Vu<V
SLV 13	4.35	-12358	-9198	-10609.91		41218	2.1416	16250	4872			0.53	No, Vu<V
SLV 13	6.45	-7952	-9165	5027.49		20138	2.8205	12361	4881			0.53	No, Vu<V
SLV 4	4.35	-8623	9573	10829.78		64871	0.9495	16250	2160			0.23	No, Vu<V
SLV 4	6.45	-11282	9541	-2650.43		25625	3.1448	13458	5925			0.62	No, Vu<V
SLV 15	4.35	-4362	-9366	-10593.42		0	0	8333	0			0	No, Vu<V
SLV 15	6.45	-959	-9047	6474.66		0	0	8333	0			0	No, Vu<V
SLV 7	4.35	2198	2748	3350.91		0	0	8333	0			0	No, Vu<V
SLV 7	6.45	490	3174	2231.72		0	0	8333	0			0	No, Vu<V
SLV 14	4.35	-12358	-9198	-10609.91		41218	2.1416	16250	4872			0.53	No, Vu<V
SLV 14	6.45	-7952	-9165	5027.49		20138	2.8205	12361	4881			0.53	No, Vu<V
SLV 16	4.35	-4362	-9366	-10593.42		0	0	8333	0			0	No, Vu<V
SLV 16	6.45	-959	-9047	6474.66		0	0	8333	0			0	No, Vu<V
SLV 11	4.35	3476	-2934	-3076.05		0	0	8333	0			0	No, Vu<V
SLV 11	6.45	3587	-2403	4969.24		0	0	8333	0			0	No, Vu<V

Verifica a pressoflessione fuori piano D.M. 17-01-18 (N.T.C.)

quota 6.125 Wa 0.03 denominatore 8 γM = 2

Comb.	fd	Sa	σ0	N	M	Mc	Coeff.s.	Verifica
SLV 16	143750	0.38	0	-1135	171.15	0	0	No, e>t/2
SLV 7	143750	0.38	0	200	171.15	0	0	No, Trazione
SLV 12	143750	0.38	0	3356	171.15	0	0	No, Trazione
SLV 8	143750	0.38	0	200	171.15	0	0	No, Trazione
SLV 15	143750	0.38	0	-1135	171.15	0	0	No, e>t/2
SLV 11	143750	0.38	0	3356	171.15	0	0	No, Trazione
SLV 14	143750	0.38	18490	-8141	171.15	483.61	2.83	Si
SLV 13	143750	0.38	18490	-8141	171.15	483.61	2.83	Si
SLV 4	143750	0.38	26474	-11656	171.15	639.12	3.73	Si
SLV 3	143750	0.38	26474	-11656	171.15	639.12	3.73	Si

Verifica dei meccanismi locali di collasso con analisi cinematica lineare

forza di aggancio al piano = 0 quota mezzeria = 6.125 Wa = 0.03 Ta = 0.1503

Comb.	N top	N base	V orto	α0	M*	e*	a0*	aLim	Verifica
SLV 7	-1764	2198	-47	0	0	0	0	16.27364	No, Trazione
SLV 8	-1764	2198	-47	0	0	0	0	16.27364	No, Trazione
SLV 12	-303	3476	-56	0	0	0	0	16.27364	No, Trazione
SLV 11	-303	3476	-56	0	0	0	0	16.27364	No, Trazione

Comb.	N top	N base	V orto	α0	M*	e*	a0*	aLim	Verifica
SLV 6	-17893	-24457	56	0.018	2041.7	0.967	0.27434	16.27364	No
SLV 5	-17893	-24457	56	0.018	2041.7	0.967	0.27434	16.27364	No
SLV 10	-16431	-23179	47	0.019	1893	0.965	0.28071	16.27364	No
SLV 9	-16431	-23179	47	0.019	1893	0.965	0.28071	16.27364	No
SLV 1	-13953	-16620	30	0.02	1640.8	0.96	0.29615	16.27364	No
SLV 2	-13953	-16620	30	0.02	1640.8	0.96	0.29615	16.27364	No

Tabella dei coefficienti di sicurezza minimi

Stato limite	Coeff.s.	Comb.	Verifica
PF_SLU	6.972	SLU 81	Si
V_SLU	13.486	SLU 82	Si
PF_SLV	0	SLV 12	No
V_SLV	0	SLV 7	No
PFFP_SLV	0	SLV 12	No
R_SLV	0	SLV 12	No

Maschio 141

Verifiche condotte secondo D.M. 17-01-18 (N.T.C.)

Dati geometrici

X ini.	Y ini.	X fin.	Y fin.	Quota i.	Quota.s	l	Sp.	h netta	h ini.	h fin.	a	a.s.,sx	a.s.,dx
-10.788	3.334	-11.093	3.334	L4	L5	0.305	0.14	3.55	3.55	3.55			

Caratteristiche del materiale

(Circolare 7 21-01-19 C8.5.I) Muratura in mattoni pieni e malta di calce LC2_Corti

fb	fk	fvk0	fmedio	τ0	fv0	μ	ϕ	fv,lim	E	G	FC
600000			345000	9000	20000	0.58	0.77	32500	320000000	128000000	1.2

Verifica a pressoflessione nel piano secondo D.M. 17-01-18 NTC §7.8.2.2.1 in combinazioni non sismiche, γM = 3

Comb.	Quota	N	M	σ0	Mu	c.s.	Verifica
SLU 83	4.35	-2551	-137.6	59731	103.74	0.754	No, M>Mu
SLU 83	6.45	-2322	123.53	54385	117.7	0.953	No, M>Mu
SLU 77	4.35	-2500	-128.74	58539	107.25	0.833	No, M>Mu
SLU 77	6.45	-2271	115.11	53193	120.19	1.044	Si
SLU 74	4.35	-2502	-128.92	58595	107.09	0.831	No, M>Mu
SLU 74	6.45	-2274	115.28	53249	120.08	1.042	Si
SLU 78	4.35	-2499	-128.74	58525	107.29	0.833	No, M>Mu
SLU 78	6.45	-2271	115.11	53179	120.22	1.044	Si
SLU 84	4.35	-2550	-137.6	59717	103.79	0.754	No, M>Mu
SLU 84	6.45	-2322	123.53	54371	117.73	0.953	No, M>Mu
SLU 75	4.35	-2501	-128.92	58580	107.13	0.831	No, M>Mu
SLU 75	6.45	-2273	115.29	53234	120.11	1.042	Si
SLU 73	4.35	-2451	-127.52	57390	110.42	0.866	No, M>Mu
SLU 73	6.45	-2222	114.05	52044	122.37	1.073	Si
SLU 81	4.35	-2553	-137.78	59787	103.57	0.752	No, M>Mu
SLU 81	6.45	-2325	123.7	54441	117.58	0.951	No, M>Mu
SLU 82	4.35	-2552	-137.78	59772	103.62	0.752	No, M>Mu
SLU 82	6.45	-2324	123.7	54426	117.61	0.951	No, M>Mu
SLU 76	4.35	-2448	-127.34	57335	110.56	0.868	No, M>Mu
SLU 76	6.45	-2220	113.88	51989	122.47	1.075	Si

Verifica a pressoflessione nel piano secondo D.M. 17-01-18 NTC §7.8.2.2.1 in combinazioni sismiche, γM = 2

Comb.	Quota	N	M	σ0	Mu	c.s.	Verifica
SLV 3	4.35	-272	133.86	0	0	0	No, e>l/2
SLV 3	6.45	-72	-127.88	0	0	0	No, e>l/2
SLV 7	4.35	802	-82.45	0	0	0	No, Trazione
SLV 7	6.45	968	82.22	0	0	0	No, Trazione
SLV 16	4.35	-1779	-340.49	0	0	0	No, e>l/2
SLV 16	6.45	-1641	318.84	0	0	0	No, e>l/2
SLV 15	4.35	-1779	-340.49	0	0	0	No, e>l/2
SLV 15	6.45	-1641	318.84	0	0	0	No, e>l/2
SLV 14	4.35	-3152	-297.39	73811	190.29	0.64	No, M>Mu
SLV 14	6.45	-3004	272.77	70341	194.35	0.713	No, M>Mu
SLV 4	4.35	-272	133.86	0	0	0	No, e>l/2
SLV 4	6.45	-72	-127.88	0	0	0	No, e>l/2
SLV 8	4.35	802	-82.45	0	0	0	No, Trazione
SLV 8	6.45	968	82.22	0	0	0	No, Trazione
SLV 11	4.35	350	-224.76	0	0	0	No, Trazione
SLV 11	6.45	498	216.23	0	0	0	No, Trazione
SLV 13	4.35	-3152	-297.39	73811	190.29	0.64	No, M>Mu
SLV 13	6.45	-3004	272.77	70341	194.35	0.713	No, M>Mu
SLV 12	4.35	350	-224.76	0	0	0	No, Trazione
SLV 12	6.45	498	216.23	0	0	0	No, Trazione

Verifica a taglio nel piano secondo D.M. 17-01-18 (N.T.C.) §7.8.2.2.2 con rottura per scorrimento in combinazioni non sismiche, γM = 3

Comb.	Quota	N	V par	M	σ0	σN	l'	fvd	Vt scorr.	Vt fess.diag.	Vt,lim	c.s.	Verifica
SLU 75	4.35	-2501	-116	-128.92		58991	0.3029	10833	459			3.95	Si
SLU 75	6.45	-2273	-116	115.29		53234	0.305	10833	463			3.98	Si
SLU 74	4.35	-2502	-116	-128.92		58998	0.3029	10833	459			3.95	Si
SLU 74	6.45	-2274	-116	115.28		53249	0.305	10833	463			3.98	Si
SLU 40	4.35	-2176	-113	-124.56		54386	0.2857	10833	433			3.84	Si
SLU 40	6.45	-1996	-113	112.47		49425	0.2884	10833	437			3.88	Si
SLU 42	4.35	-2173	-113	-124.38		54315	0.2858	10833	433			3.85	Si
SLU 42	6.45	-1993	-113	112.3		49356	0.2885	10833	438			3.88	Si
SLU 82	4.35	-2552	-125	-137.78		61685	0.2955	10833	448			3.6	Si
SLU 82	6.45	-2324	-125	123.7		55740	0.2978	10833	452			3.63	Si

Comb.	Quota	N	V par	M	σ0	σN	l'	fvd	Vt scorr.	Vt fess.diag.	Vt,lim	c.s.	Verifica
SLU 41	4.35	-2174	-113	-124.37		54321	0.2859	10833	434			3.85	Si
SLU 41	6.45	-1994	-113	112.29		49361	0.2886	10833	438			3.88	Si
SLU 39	4.35	-2176	-113	-124.56		54392	0.2858	10833	433			3.84	Si
SLU 39	6.45	-1996	-113	112.46		49430	0.2885	10833	438			3.88	Si
SLU 84	4.35	-2550	-124	-137.6		61615	0.2956	10833	448			3.61	Si
SLU 84	6.45	-2322	-124	123.53		55672	0.2979	10833	452			3.63	Si
SLU 83	4.35	-2551	-124	-137.6		61621	0.2956	10833	448			3.61	Si
SLU 83	6.45	-2322	-124	123.53		55678	0.2979	10833	452			3.63	Si
SLU 81	4.35	-2553	-125	-137.78		61692	0.2956	10833	448			3.6	Si
SLU 81	6.45	-2325	-125	123.7		55746	0.2979	10833	452			3.63	Si

Verifica a taglio nel piano secondo D.M. 17-01-18 (N.T.C.) §7.8.2.2.2 con rottura per scorrimento in combinazioni sismiche, γM = 2

Comb.	Quota	N	V par	M	σ0	σN	l'	fvd	Vt scorr.	Vt fess.diag.	Vt,lim	c.s.	Verifica
SLV 3	4.35	-272	232	133.86		0	0	8333	0			0	No, Vu<V
SLV 3	6.45	-72	122	-127.88		0	0	8333	0			0	No, Vu<V
SLV 12	4.35	350	-257	-224.76		0	0	8333	0			0	No, Vu<V
SLV 12	6.45	498	-219	216.23		0	0	8333	0			0	No, Vu<V
SLV 8	4.35	802	-59	-82.45		0	0	8333	0			0	No, Vu<V
SLV 8	6.45	968	-87	82.22		0	0	8333	0			0	No, Vu<V
SLV 13	4.35	-3152	-379	-297.39		129068	0.1744	16250	397			1.05	Si
SLV 13	6.45	-3004	-269	272.77		115936	0.185	16250	421			1.57	Si
SLV 15	4.35	-1779	-430	-340.49		0	0	8333	0			0	No, Vu<V
SLV 15	6.45	-1641	-316	318.84		0	0	8333	0			0	No, Vu<V
SLV 16	4.35	-1779	-430	-340.49		0	0	8333	0			0	No, Vu<V
SLV 16	6.45	-1641	-316	318.84		0	0	8333	0			0	No, Vu<V
SLV 7	4.35	802	-59	-82.45		0	0	8333	0			0	No, Vu<V
SLV 7	6.45	968	-87	82.22		0	0	8333	0			0	No, Vu<V
SLV 14	4.35	-3152	-379	-297.39		129068	0.1744	16250	397			1.05	Si
SLV 14	6.45	-3004	-269	272.77		115936	0.185	16250	421			1.57	Si
SLV 4	4.35	-272	232	133.86		0	0	8333	0			0	No, Vu<V
SLV 4	6.45	-72	122	-127.88		0	0	8333	0			0	No, Vu<V
SLV 11	4.35	350	-257	-224.76		0	0	8333	0			0	No, Vu<V
SLV 11	6.45	498	-219	216.23		0	0	8333	0			0	No, Vu<V

Verifica a pressoflessione fuori piano D.M. 17-01-18 (N.T.C.)

quota 6.125 Wa 0.03 denominatore 8 γM = 2

Comb.	fd	Sa	σ0	N	M	Mc	Coeff.s.	Verifica
SLV 8	143750	0.38	0	864	16.6	0	0	No, Trazione
SLV 7	143750	0.38	0	864	16.6	0	0	No, Trazione
SLV 12	143750	0.38	0	505	16.6	0	0	No, Trazione
SLV 11	143750	0.38	0	505	16.6	0	0	No, Trazione
SLV 3	143750	0.38	6907	-295	16.6	19.48	1.17	Si
SLV 4	143750	0.38	6907	-295	16.6	19.48	1.17	Si
SLV 10	143750	0.38	93792	-4005	16.6	65.15	3.93	Si
SLV 9	143750	0.38	93792	-4005	16.6	65.15	3.93	Si
SLV 16	143750	0.38	34959	-1493	16.6	74.6	4.49	Si
SLV 15	143750	0.38	34959	-1493	16.6	74.6	4.49	Si

Verifica dei meccanismi locali di collasso con analisi cinematica lineare

forza di aggancio al piano = 0 quota mezzeria = 6.125 Wa = 0.03 Ta = 0.1503

Comb.	N top	N base	V orto	α0	M*	e*	a0*	aLim	Verifica
SLV 8	318	802	-7	0	0	0	0	16.27364	No, Trazione
SLV 11	913	350	-13	0	0	0	0	16.27364	No, Trazione
SLV 7	318	802	-7	0	0	0	0	16.27364	No, Trazione
SLV 12	913	350	-13	0	0	0	0	16.27364	No, Trazione
SLV 15	939	-1779	-13	0	0	0	0	16.27364	No, Trazione
SLV 16	939	-1779	-13	0	0	0	0	16.27364	No, Trazione
SLV 14	367	-3152	-7	0	0	0	0	16.27364	No, Trazione
SLV 13	367	-3152	-7	0	0	0	0	16.27364	No, Trazione
SLV 5	-1590	-3773	13	0.013	183.2	0.965	0.20319	16.27364	No
SLV 6	-1590	-3773	13	0.013	183.2	0.965	0.20319	16.27364	No

Tabella dei coefficienti di sicurezza minimi

Stato limite	Coeff.s.	Comb.	Verifica
PF_SLU	0.752	SLU 81	No
V_SLU	3.6	SLU 82	Si
PF_SLV	0	SLV 12	No
V_SLV	0	SLV 3	No
PFFP_SLV	0	SLV 12	No
R_SLV	0	SLV 16	No

Maschio 142

Verifiche condotte secondo D.M. 17-01-18 (N.T.C.)

Dati geometrici

X ini.	Y ini.	X fin.	Y fin.	Quota i.	Quota.s	l	Sp.	h netta	h ini.	h fin.	a	a.s.,sx	a.s.,dx
-9.746	3.334	-9.988	3.334	L4	L5	0.242	0.14	3.55	3.55	3.55			

Caratteristiche del materiale

(Circolare 7 21-01-19 C8.5.I) Muratura in mattoni pieni e malta di calce LC2_Corti

fb	fk	fvk0	fmedio	τ0	fv0	μ	ϕ	fv,lim	E	G	FC
600000			345000	9000	20000	0.58	0.77	32500	320000000	128000000	1.2

Verifica a pressoflessione nel piano secondo D.M. 17-01-18 NTC §7.8.2.2.1 in combinazioni non sismiche, γM = 3

Comb.	Quota	N	M	σ0	Mu	c.s.	Verifica
SLU 82	4.35	-1044	-75.82	30820	78.48	1.035	Si
SLU 82	6.45	-2923	95.73	86307	0	0	No, Rottura per schiacciamento
SLU 75	4.35	-1074	-69.18	31716	79.33	1.147	Si
SLU 75	6.45	-2787	88.84	82308	0	0	No, Rottura per schiacciamento
SLU 77	4.35	-1075	-69.02	31744	79.35	1.15	Si
SLU 77	6.45	-2784	88.67	82205	0	0	No, Rottura per schiacciamento
SLU 73	4.35	-1044	-68.75	30841	78.5	1.142	Si
SLU 73	6.45	-2743	87.98	80995	1.89	0.021	No, M>Mu
SLU 81	4.35	-1044	-75.81	30838	78.5	1.035	Si
SLU 81	6.45	-2923	95.72	86317	0	0	No, Rottura per schiacciamento
SLU 84	4.35	-1044	-75.67	30830	78.49	1.037	Si
SLU 84	6.45	-2919	95.56	86194	0	0	No, Rottura per schiacciamento
SLU 78	4.35	-1074	-69.04	31726	79.34	1.149	Si
SLU 78	6.45	-2784	88.67	82195	0	0	No, Rottura per schiacciamento
SLU 76	4.35	-1045	-68.61	30851	78.51	1.144	Si
SLU 76	6.45	-2739	87.81	80882	2.34	0.027	No, M>Mu
SLU 74	4.35	-1075	-69.17	31734	79.35	1.147	Si
SLU 74	6.45	-2788	88.84	82318	0	0	No, Rottura per schiacciamento
SLU 83	4.35	-1045	-75.66	30848	78.5	1.038	Si
SLU 83	6.45	-2919	95.55	86204	0	0	No, Rottura per schiacciamento

Verifica a pressoflessione nel piano secondo D.M. 17-01-18 NTC §7.8.2.2.1 in combinazioni sismiche, γM = 2

Comb.	Quota	N	M	σ0	Mu	c.s.	Verifica
SLV 11	4.35	1605	-149.71	0	0	0	No, Trazione
SLV 11	6.45	-2585	230.76	76334	117.34	0.508	No, M>Mu
SLV 4	4.35	-520	85.09	0	0	0	No, e>l/2
SLV 4	6.45	298	4.53	0	0	0	No, Trazione
SLV 3	4.35	-520	85.09	0	0	0	No, e>l/2
SLV 3	6.45	298	4.53	0	0	0	No, Trazione
SLV 1	4.35	-1886	123.51	55684	124.14	1.005	Si
SLV 1	6.45	370	-83.56	0	0	0	No, Trazione
SLV 7	4.35	1360	-62.03	0	0	0	No, Trazione
SLV 7	6.45	-1294	173.79	0	0	0	No, e>l/2
SLV 8	4.35	1360	-62.03	0	0	0	No, Trazione
SLV 8	6.45	-1294	173.79	0	0	0	No, e>l/2
SLV 13	4.35	-1069	-168.76	0	0	0	No, e>l/2
SLV 13	6.45	-3935	106.36	116197	23.33	0.219	No, M>Mu
SLV 12	4.35	1605	-149.71	0	0	0	No, Trazione
SLV 12	6.45	-2585	230.76	76334	117.34	0.508	No, M>Mu
SLV 2	4.35	-1886	123.51	55684	124.14	1.005	Si
SLV 2	6.45	370	-83.56	0	0	0	No, Trazione
SLV 14	4.35	-1069	-168.76	0	0	0	No, e>l/2
SLV 14	6.45	-3935	106.36	116197	23.33	0.219	No, M>Mu

Verifica a taglio nel piano secondo D.M. 17-01-18 (N.T.C.) §7.8.2.2.2 con rottura per scorrimento in combinazioni non sismiche, γM = 3

Comb.	Quota	N	V par	M	σ0	σN	l'	fvd	Vt scorr.	Vt fess.diag.	Vt,lim	c.s.	Verifica
SLU 39	4.35	-828	-185	-70.63		55336	0.1068	10833	162			0.88	No, Vu<V
SLU 39	6.45	-2587	-186	87.44		76390	0.2419	10833	367			1.97	Si
SLU 34	4.35	-828	-167	-63.43		44449	0.1331	10833	202			1.21	Si
SLU 34	6.45	-2403	-169	79.53		70955	0.2419	10833	367			2.18	Si
SLU 31	4.35	-828	-167	-63.57		44641	0.1325	10833	201			1.2	Si
SLU 31	6.45	-2407	-169	79.7		71068	0.2419	10833	367			2.17	Si
SLU 40	4.35	-827	-185	-70.64		55411	0.1066	10833	162			0.88	No, Vu<V
SLU 40	6.45	-2587	-186	87.44		76380	0.2419	10833	367			1.97	Si
SLU 83	4.35	-1045	-200	-75.66		51262	0.1456	10833	221			1.11	Si
SLU 83	6.45	-2919	-202	95.55		86204	0.2419	10833	367			1.82	Si
SLU 84	4.35	-1044	-200	-75.67		51287	0.1454	10833	221			1.1	Si
SLU 84	6.45	-2919	-202	95.56		86194	0.2419	10833	367			1.82	Si
SLU 82	4.35	-1044	-200	-75.82		51445	0.1449	10833	220			1.1	Si
SLU 82	6.45	-2923	-202	95.73		86307	0.2419	10833	367			1.81	Si
SLU 41	4.35	-828	-184	-70.48		55031	0.1075	10833	163			0.88	No, Vu<V
SLU 41	6.45	-2583	-186	87.27		76276	0.2419	10833	367			1.97	Si
SLU 42	4.35	-827	-184	-70.5		55105	0.1073	10833	163			0.88	No, Vu<V
SLU 42	6.45	-2583	-186	87.27		76266	0.2419	10833	367			1.97	Si
SLU 81	4.35	-1044	-200	-75.81		51419	0.1451	10833	220			1.1	Si
SLU 81	6.45	-2923	-202	95.72		86317	0.2419	10833	367			1.81	Si

Verifica a taglio nel piano secondo D.M. 17-01-18 (N.T.C.) §7.8.2.2.2 con rottura per scorrimento in combinazioni sismiche, γM = 2

Comb.	Quota	N	V par	M	σ0	σN	l'	fvd	Vt scorr.	Vt fess.diag.	Vt,lim	c.s.	Verifica
SLV 14	4.35	-1069	-377	-168.76		0	0	8333	0			0	No, Vu<V
SLV 14	6.45	-3935	-230	106.36		116197	0.2419	16250	550			2.39	Si
SLV 1	4.35	-1886	295	123.51		80964	0.1664	16250	378			1.28	Si
SLV 1	6.45	370	117	-83.56		0	0	8333	0			0	No, Vu<V
SLV 3	4.35	-520	151	85.09		0	0	8333	0			0	No, Vu<V
SLV 3	6.45	298	1	4.53		0	0	8333	0			0	No, Vu<V
SLV 13	4.35	-1069	-377	-168.76		0	0	8333	0			0	No, Vu<V
SLV 13	6.45	-3935	-230	106.36		116197	0.2419	16250	550			2.39	Si
SLV 8	4.35	1360	-252	-62.03		0	0	8333	0			0	No, Vu<V
SLV 8	6.45	-1294	-255	173.79		0	0	8333	0			0	No, Vu<V
SLV 12	4.35	1605	-453	-149.71		0	0	8333	0			0	No, Vu<V
SLV 12	6.45	-2585	-358	230.76		194266	0.0951	16250	216			0.6	No, Vu<V

Comb.	Quota	N	V par	M	σ0	σN	l'	fvd	Vt scorr.	Vt fess.diag.	Vt,lim	c.s.	Verifica
SLV 2	4.35	-1886	295	123.51		80964	0.1664	16250	378			1.28	Si
SLV 2	6.45	370	117	-83.56		0	0	8333	0			0	No, Vu<V
SLV 4	4.35	-520	151	85.09		0	0	8333	0			0	No, Vu<V
SLV 4	6.45	298	1	4.53		0	0	8333	0			0	No, Vu<V
SLV 11	4.35	1605	-453	-149.71		0	0	8333	0			0	No, Vu<V
SLV 11	6.45	-2585	-358	230.76		194266	0.0951	16250	216			0.6	No, Vu<V
SLV 7	4.35	1360	-252	-62.03		0	0	8333	0			0	No, Vu<V
SLV 7	6.45	-1294	-255	173.79		0	0	8333	0			0	No, Vu<V

Verifica a pressoflessione fuori piano D.M. 17-01-18 (N.T.C.)

quota 6.125 Wa 0.03 denominatore 8 γM = 2

Comb.	fd	Sa	σ0	N	M	Mc	Coeff.s.	Verifica
SLV 3	143750	0.38	0	613	13.16	0	0	No, Trazione
SLV 14	143750	0.38	126778	-4293	13.16	0	0	No, Rottura per schiacciamento
SLV 2	143750	0.38	0	7	13.16	0	0	No, Trazione
SLV 8	143750	0.38	0	-185	13.16	0	0	No, e>t/2
SLV 13	143750	0.38	126778	-4293	13.16	0	0	No, Rottura per schiacciamento
SLV 7	143750	0.38	0	-185	13.16	0	0	No, e>t/2
SLV 4	143750	0.38	0	613	13.16	0	0	No, Trazione
SLV 1	143750	0.38	0	7	13.16	0	0	No, Trazione
SLV 15	143750	0.38	108879	-3687	13.16	28.11	2.14	Si
SLV 16	143750	0.38	108879	-3687	13.16	28.11	2.14	Si

Verifica dei meccanismi locali di collasso con analisi cinematica lineare

forza di aggancio al piano = 0 quota mezzeria = 6.125 Wa = 0.03 Ta = 0.1503

Comb.	N top	N base	V orto	α0	M*	e*	a0*	aLim	Verifica
SLV 8	-19	1360	-5	0	0	0	0	16.27364	No, Trazione
SLV 11	-396	1605	-6	0	0	0	0	16.27364	No, Trazione
SLV 4	61	-520	0	0	0	0	0	16.27364	No, Trazione
SLV 16	-1194	297	-3	0	0	0	0	16.27364	No, Trazione
SLV 12	-396	1605	-6	0	0	0	0	16.27364	No, Trazione
SLV 3	61	-520	0	0	0	0	0	16.27364	No, Trazione
SLV 15	-1194	297	-3	0	0	0	0	16.27364	No, Trazione
SLV 7	-19	1360	-5	0	0	0	0	16.27364	No, Trazione
SLV 6	-1045	-3193	6	0.017	123.3	0.959	0.25348	16.27364	No
SLV 5	-1045	-3193	6	0.017	123.3	0.959	0.25348	16.27364	No

Tabella dei coefficienti di sicurezza minimi

Stato limite	Coeff.s.	Comb.	Verifica
PF_SLU	0	SLU 74	No
V_SLU	0.875	SLU 40	No
PF_SLV	0	SLV 16	No
V_SLV	0	SLV 1	No
PFFP_SLV	0	SLV 4	No
R_SLV	0	SLV 16	No

Maschio 143

Verifiche condotte secondo D.M. 17-01-18 (N.T.C.)

Dati geometrici

X ini.	Y ini.	X fin.	Y fin.	Quota i.	Quota.s	l	Sp.	h netta	h ini.	h fin.	a	a.s.,sx	a.s.,dx
-19.687	6.536	-17.796	6.536	L4	L5	1.892	0.28	3.55	3.55	3.55			

Caratteristiche del materiale

(Circolare 7 21-01-19 C8.5.I) Muratura in mattoni pieni e malta di calce LC2_Corti

fb	fk	fvk0	fmedio	τ0	fv0	μ	ϕ	fv,lim	E	G	FC
600000			345000	9000	20000	0.58	0.77	32500	320000000	128000000	1.2

Verifica a pressoflessione nel piano secondo D.M. 17-01-18 NTC §7.8.2.2.1 in combinazioni non sismiche, γM = 3

Comb.	Quota	N	M	σ0	Mu	c.s.	Verifica
SLU 80	5.25	-19991	-286.79	37743	10147.27	35.382	Si
SLU 80	7.15	-19859	2008.78	37493	10137.7	5.047	Si
SLU 81	5.25	-19950	-265.96	37665	10144.35	38.142	Si
SLU 81	7.15	-19741	1944.3	37271	10128.57	5.209	Si
SLU 77	5.25	-20248	-285.31	38228	10163.63	35.623	Si
SLU 77	7.15	-20128	2022.31	38002	10156.35	5.022	Si
SLU 78	5.25	-20250	-280.46	38231	10163.72	36.239	Si
SLU 78	7.15	-20124	2019.29	37994	10156.08	5.03	Si
SLU 82	5.25	-19951	-261.11	37668	10144.47	38.851	Si
SLU 82	7.15	-19737	1941.27	37264	10128.23	5.217	Si
SLU 83	5.25	-20329	-293.52	38380	10168.16	34.643	Si
SLU 83	7.15	-20229	2030.86	38193	10162.54	5.004	Si
SLU 75	5.25	-19871	-252.91	37516	10138.6	40.088	Si
SLU 75	7.15	-19636	1932.73	37072	10119.86	5.236	Si
SLU 84	5.25	-20330	-288.66	38383	10168.25	35.225	Si
SLU 84	7.15	-20225	2027.83	38185	10162.29	5.011	Si
SLU 74	5.25	-19869	-257.76	37513	10138.48	39.333	Si
SLU 74	7.15	-19640	1935.76	37080	10120.21	5.228	Si
SLU 79	5.25	-19990	-291.65	37740	10147.16	34.793	Si
SLU 79	7.15	-19863	2011.81	37501	10138.01	5.039	Si

Verifica a pressoflessione nel piano secondo D.M. 17-01-18 NTC §7.8.2.2.1 in combinazioni sismiche, γM = 2

Comb.	Quota	N	M	σ0	Mu	c.s.	Verifica
SLV 6	5.25	-6621	-1530.73	12500	5621.7	3.673	Si
SLV 6	7.15	-9494	1278.91	17924	7662.22	5.991	Si
SLV 4	5.25	-14100	-3196.99	26620	10430.64	3.263	Si
SLV 4	7.15	-18521	5267.15	34967	12504.45	2.374	Si
SLV 5	5.25	-6621	-1530.73	12500	5621.7	3.673	Si
SLV 5	7.15	-9494	1278.91	17924	7662.22	5.991	Si
SLV 2	5.25	-10174	-3459.53	19209	8110.31	2.344	Si
SLV 2	7.15	-15630	4622.26	29509	11212.98	2.426	Si
SLV 3	5.25	-14100	-3196.99	26620	10430.64	3.263	Si
SLV 3	7.15	-18521	5267.15	34967	12504.45	2.374	Si
SLV 13	5.25	-13108	2926.44	24747	9886.6	3.378	Si
SLV 13	7.15	-7734	-2780.51	14602	6441.12	2.317	Si
SLV 8	5.25	-19706	-655.61	37206	12963.47	19.773	Si
SLV 8	7.15	-19130	3428.56	36117	12745.47	3.717	Si
SLV 7	5.25	-19706	-655.61	37206	12963.47	19.773	Si
SLV 7	7.15	-19130	3428.56	36117	12745.47	3.717	Si
SLV 1	5.25	-10174	-3459.53	19209	8110.31	2.344	Si
SLV 1	7.15	-15630	4622.26	29509	11212.98	2.426	Si
SLV 14	5.25	-13108	2926.44	24747	9886.6	3.378	Si
SLV 14	7.15	-7734	-2780.51	14602	6441.12	2.317	Si

Verifica a taglio nel piano secondo D.M. 17-01-18 (N.T.C.) §7.8.2.2.2 con rottura per scorrimento in combinazioni non sismiche, γM = 3

Comb.	Quota	N	V par	M	σ0	σN	I'	fvd	Vt scorr.	Vt fess.diag.	Vt,lim	c.s.	Verifica
SLU 80	5.25	-19991	-2280	-286.79		37743	1.8917	10588	5608			2.46	Si
SLU 80	7.15	-19859	-2315	2008.78		37493	1.8917	10555	5590			2.41	Si
SLU 82	5.25	-19951	-2190	-261.11		37668	1.8917	10578	5603			2.56	Si
SLU 82	7.15	-19737	-2226	1941.27		37264	1.8917	10524	5574			2.5	Si
SLU 84	5.25	-20330	-2304	-288.66		38383	1.8917	10673	5653			2.45	Si
SLU 84	7.15	-20225	-2340	2027.83		38185	1.8917	10647	5639			2.41	Si
SLU 74	5.25	-19869	-2177	-257.76		37513	1.8917	10557	5592			2.57	Si
SLU 74	7.15	-19640	-2215	1935.76		37080	1.8917	10500	5561			2.51	Si
SLU 77	5.25	-20248	-2292	-285.31		38228	1.8917	10653	5642			2.46	Si
SLU 77	7.15	-20128	-2329	2022.31		38002	1.8917	10622	5626			2.42	Si
SLU 41	5.25	-17133	-2056	-285.11		32346	1.8917	9868	5227			2.54	Si
SLU 41	7.15	-17314	-2089	1780.2		32689	1.8917	9914	5251			2.51	Si
SLU 79	5.25	-19990	-2286	-291.65		37740	1.8917	10588	5608			2.45	Si
SLU 79	7.15	-19863	-2323	2011.81		37501	1.8917	10556	5591			2.41	Si
SLU 78	5.25	-20250	-2286	-280.46		38231	1.8917	10653	5643			2.47	Si
SLU 78	7.15	-20124	-2321	2019.29		37994	1.8917	10621	5626			2.42	Si
SLU 81	5.25	-19950	-2195	-265.96		37665	1.8917	10578	5603			2.55	Si
SLU 81	7.15	-19741	-2235	1944.3		37271	1.8917	10525	5575			2.49	Si
SLU 83	5.25	-20329	-2310	-293.52		38380	1.8917	10673	5653			2.45	Si
SLU 83	7.15	-20229	-2349	2030.86		38193	1.8917	10648	5640			2.4	Si

Verifica a taglio nel piano secondo D.M. 17-01-18 (N.T.C.) §7.8.2.2.2 con rottura per scorrimento in combinazioni sismiche, γM = 2

Comb.	Quota	N	V par	M	σ0	σN	I'	fvd	Vt scorr.	Vt fess.diag.	Vt,lim	c.s.	Verifica
SLV 13	5.25	-13108	4725	2926.44		24747	1.8917	13283	7035			1.49	Si
SLV 13	7.15	-7734	3727	-2780.51		15704	1.759	11474	5651			1.52	Si
SLV 1	5.25	-10174	-9054	-3459.53		19994	1.8174	12332	6275			0.69	No, Vu<V
SLV 1	7.15	-15630	-7881	4622.26		29509	1.8917	14235	7540			0.96	No, Vu<V
SLV 15	5.25	-17033	6331	3188.98		32158	1.8917	14765	7820			1.24	Si
SLV 15	7.15	-10625	5104	-2135.61		20060	1.8917	12345	6539			1.28	Si
SLV 14	5.25	-13108	4725	2926.44		24747	1.8917	13283	7035			1.49	Si
SLV 14	7.15	-7734	3727	-2780.51		15704	1.759	11474	5651			1.52	Si
SLV 16	5.25	-17033	6331	3188.98		32158	1.8917	14765	7820			1.24	Si
SLV 16	7.15	-10625	5104	-2135.61		20060	1.8917	12345	6539			1.28	Si
SLV 6	5.25	-6621	-6105	-1530.73		12500	1.8917	10833	5738			0.94	No, Vu<V
SLV 6	7.15	-9494	-5425	1278.91		17924	1.8917	11918	6313			1.16	Si
SLV 3	5.25	-14100	-7447	-3196.99		26620	1.8917	13657	7234			0.97	No, Vu<V
SLV 3	7.15	-18521	-6503	5267.15		34967	1.8917	15327	8118			1.25	Si
SLV 2	5.25	-10174	-9054	-3459.53		19994	1.8174	12332	6275			0.69	No, Vu<V
SLV 2	7.15	-15630	-7881	4622.26		29509	1.8917	14235	7540			0.96	No, Vu<V
SLV 5	5.25	-6621	-6105	-1530.73		12500	1.8917	10833	5738			0.94	No, Vu<V
SLV 5	7.15	-9494	-5425	1278.91		17924	1.8917	11918	6313			1.16	Si
SLV 4	5.25	-14100	-7447	-3196.99		26620	1.8917	13657	7234			0.97	No, Vu<V
SLV 4	7.15	-18521	-6503	5267.15		34967	1.8917	15327	8118			1.25	Si

Verifica a pressoflessione fuori piano D.M. 17-01-18 (N.T.C.)

quota 6.125 Wa 0.05 denominatore 8 γM = 2

Comb.	fd	Sa	σ0	N	M	Mc	Coeff.s.	Verifica
SLV 9	143750	0.38	13471	-7135	192.47	888.8	4.62	Si
SLV 10	143750	0.38	13471	-7135	192.47	888.8	4.62	Si
SLV 6	143750	0.38	15500	-8210	192.47	1003.54	5.21	Si
SLV 5	143750	0.38	15500	-8210	192.47	1003.54	5.21	Si
SLV 14	143750	0.38	19169	-10153	192.47	1198.43	6.23	Si
SLV 13	143750	0.38	19169	-10153	192.47	1198.43	6.23	Si
SLV 1	143750	0.38	25930	-13734	192.47	1514.73	7.87	Si
SLV 2	143750	0.38	25930	-13734	192.47	1514.73	7.87	Si
SLV 15	143750	0.38	26081	-13814	192.47	1521.16	7.9	Si
SLV 16	143750	0.38	26081	-13814	192.47	1521.16	7.9	Si

Verifica dei meccanismi locali di collasso con analisi cinematica lineare

forza di aggancio al piano = 0 quota mezzeria = 6.125 Wa = 0.05 Ta = 0.0752

Comb.	N top	N base	V orto	α0	M*	e*	a0*	aLim	Verifica
SLV 9	-7530	-6140	-175	0.028	1035	0.93	0.43339	9.97238	No
SLV 10	-7530	-6140	-175	0.028	1035	0.93	0.43339	9.97238	No
SLV 6	-8634	-6794	-155	0.031	1146.6	0.936	0.47906	9.97238	No
SLV 5	-8634	-6794	-155	0.031	1146.6	0.936	0.47906	9.97238	No

Comb.	N top	N base	V orto	α0	M*	e*	a0*	aLim	Verifica
SLV 7	-14405	-19524	174	0.033	1731.9	0.955	0.49834	9.97238	No
SLV 8	-14405	-19524	174	0.033	1731.9	0.955	0.49834	9.97238	No
SLV 12	-13301	-18870	155	0.034	1619.7	0.952	0.51179	9.97238	No
SLV 11	-13301	-18870	155	0.034	1619.7	0.952	0.51179	9.97238	No
SLV 4	-13673	-15831	81	0.038	1657.6	0.953	0.58675	11.26714	No
SLV 3	-13673	-15831	81	0.038	1657.6	0.953	0.58675	11.26714	No

Tabella dei coefficienti di sicurezza minimi

Stato limite	Coeff.s.	Comb.	Verifica
PF_SLU	5.004	SLU 83	Si
V_SLU	2.401	SLU 83	Si
PF_SLV	2.317	SLV 13	Si
V_SLV	0.693	SLV 1	No
PFFP_SLV	4.618	SLV 9	Si
R_SLV	0.043	SLV 9	No

Maschio 144

Verifiche condotte secondo D.M. 17-01-18 (N.T.C.)

Dati geometrici

X ini.	Y ini.	X fin.	Y fin.	Quota i.	Quota.s	l	Sp.	h netta	h ini.	h fin.	a	a.s.,sx	a.s.,dx
-16.796	6.536	-12.901	6.536	L4	L5	3.895	0.28	3.55	3.55	3.55			

Caratteristiche del materiale

(Circolare 7 21-01-19 C8.5.I) Muratura in mattoni pieni e malta di calce LC2_Corti

fb	fk	fvk0	fmedio	τ0	fv0	μ	ϕ	fv,lim	E	G	FC
600000			345000	9000	20000	0.58	0.77	32500	320000000	128000000	1.2

Verifica a pressoflessione nel piano secondo D.M. 17-01-18 NTC §7.8.2.2.1 in combinazioni non sismiche, γM = 3

Comb.	Quota	N	M	σ0	Mu	c.s.	Verifica
SLU 71	5.25	-39754	-1127.71	36451	42775.79	37.932	Si
SLU 71	7.15	-35386	740.26	32446	41464.11	56.013	Si
SLU 72	5.25	-39768	-1112.36	36464	42778.72	38.458	Si
SLU 72	7.15	-35399	730.61	32458	41469.22	56.76	Si
SLU 48	5.25	-36365	-1129.1	33344	41830.82	37.048	Si
SLU 48	7.15	-31963	775.42	29308	39851.57	51.394	Si
SLU 45	5.25	-35240	-1067.38	32312	41405.81	38.792	Si
SLU 45	7.15	-30840	659.94	28278	39210.49	59.415	Si
SLU 50	5.25	-35869	-1116.1	32889	41650.31	37.318	Si
SLU 50	7.15	-31464	775.29	28850	39573.63	51.044	Si
SLU 51	5.25	-35883	-1100.75	32902	41655.68	37.843	Si
SLU 51	7.15	-31477	765.64	28862	39580.96	51.697	Si
SLU 49	5.25	-36379	-1113.75	33357	41835.87	37.563	Si
SLU 49	7.15	-31976	765.77	29319	39858.62	52.05	Si
SLU 77	5.25	-43998	-1107.01	40343	43249.06	39.068	Si
SLU 77	7.15	-39779	651.14	36474	42780.92	65.702	Si
SLU 69	5.25	-40250	-1140.71	36906	42871.84	37.583	Si
SLU 69	7.15	-35885	740.39	32904	41656.26	56.263	Si
SLU 70	5.25	-40264	-1125.36	36919	42874.45	38.098	Si
SLU 70	7.15	-35898	730.74	32916	41661.09	57.012	Si

Verifica a pressoflessione nel piano secondo D.M. 17-01-18 NTC §7.8.2.2.1 in combinazioni sismiche, γM = 2

Comb.	Quota	N	M	σ0	Mu	c.s.	Verifica
SLV 9	5.25	-12988	2997.26	11909	22828.15	7.616	Si
SLV 9	7.15	-13747	-3944.11	12605	24010.93	6.088	Si
SLV 14	5.25	-22662	10116.66	20779	36628.47	3.621	Si
SLV 14	7.15	-21615	-12457.53	19819	35266.62	2.831	Si
SLV 15	5.25	-31996	9790.61	29338	47350.85	4.836	Si
SLV 15	7.15	-28707	-12148.55	26322	43863	3.611	Si
SLV 1	5.25	-26136	-11311.29	23965	40916.55	3.617	Si
SLV 1	7.15	-22778	12896.47	20886	36777.25	2.852	Si
SLV 10	5.25	-12988	2997.26	11909	22828.15	7.616	Si
SLV 10	7.15	-13747	-3944.11	12605	24010.93	6.088	Si
SLV 3	5.25	-35470	-11637.33	32524	50691.1	4.356	Si
SLV 3	7.15	-29870	13205.46	27389	45132.51	3.418	Si
SLV 13	5.25	-22662	10116.66	20779	36628.47	3.621	Si
SLV 13	7.15	-21615	-12457.53	19819	35266.62	2.831	Si
SLV 2	5.25	-26136	-11311.29	23965	40916.55	3.617	Si
SLV 2	7.15	-22778	12896.47	20886	36777.25	2.852	Si
SLV 16	5.25	-31996	9790.61	29338	47350.85	4.836	Si
SLV 16	7.15	-28707	-12148.55	26322	43863	3.611	Si
SLV 4	5.25	-35470	-11637.33	32524	50691.1	4.356	Si
SLV 4	7.15	-29870	13205.46	27389	45132.51	3.418	Si

Verifica a taglio nel piano secondo D.M. 17-01-18 (N.T.C.) §7.8.2.2.2 con rottura per scorrimento in combinazioni non sismiche, γM = 3

Comb.	Quota	N	V par	M	σ0	σN	l'	fvd	Vt scorr.	Vt fess.diag.	Vt,lim	c.s.	Verifica
SLU 48	5.25	-36365	-1043	-1129.1		33344	3.895	10001	10907			10.46	Si
SLU 48	7.15	-31963	-1042	775.42		29308	3.895	9463	10321			9.9	Si
SLU 71	5.25	-39754	-1033	-1127.71		36451	3.895	10416	11359			11	Si
SLU 71	7.15	-35386	-1032	740.26		32446	3.895	9882	10777			10.45	Si
SLU 50	5.25	-35869	-1036	-1116.1		32889	3.895	9941	10841			10.46	Si
SLU 50	7.15	-31464	-1035	775.29		28850	3.895	9402	10254			9.91	Si
SLU 46	5.25	-35254	-937	-1052.03		32325	3.895	9866	10759			11.48	Si
SLU 46	7.15	-30852	-936	650.29		28290	3.895	9327	10173			10.87	Si
SLU 72	5.25	-39768	-1020	-1112.36		36464	3.895	10417	11361			11.14	Si
SLU 72	7.15	-35399	-1018	730.61		32458	3.895	9883	10779			10.59	Si

Comb.	Quota	N	V par	M	σ0	σN	l'	fvd	Vt scorr.	Vt fess.diag.	Vt,lim	c.s.	Verifica
SLU 49	5.25	-36379	-1030	-1113.75		33357	3.895	10003	10909			10.59	Si
SLU 49	7.15	-31976	-1029	765.77		29319	3.895	9465	10322			10.03	Si
SLU 45	5.25	-35240	-950	-1067.38		32312	3.895	9864	10758			11.32	Si
SLU 45	7.15	-30840	-949	659.94		28278	3.895	9326	10171			10.72	Si
SLU 51	5.25	-35883	-1023	-1100.75		32902	3.895	9943	10843			10.6	Si
SLU 51	7.15	-31477	-1021	765.64		28862	3.895	9404	10256			10.04	Si
SLU 70	5.25	-40264	-1027	-1125.36		36919	3.895	10478	11427			11.13	Si
SLU 70	7.15	-35898	-1025	730.74		32916	3.895	9944	10845			10.58	Si
SLU 69	5.25	-40250	-1040	-1140.71		36906	3.895	10476	11425			10.98	Si
SLU 69	7.15	-35885	-1039	740.39		32904	3.895	9943	10843			10.44	Si

Verifica a taglio nel piano secondo D.M. 17-01-18 (N.T.C.) §7.8.2.2.2 con rottura per scorrimento in combinazioni sismiche, γM = 2

Comb.	Quota	N	V par	M	σ0	σN	l'	fvd	Vt scorr.	Vt fess.diag.	Vt,lim	c.s.	Verifica
SLV 15	5.25	-31996	12201	9790.61		29338	3.895	14201	15488			1.27	Si
SLV 15	7.15	-28707	10779	-12148.55		26322	3.895	13598	14830			1.38	Si
SLV 13	5.25	-22662	12730	10116.66		20779	3.895	12489	13621			1.07	Si
SLV 13	7.15	-21615	10846	-12457.53		19819	3.895	12297	13411			1.24	Si
SLV 2	5.25	-26136	-13476	-11311.29		23965	3.895	13126	14315			1.06	Si
SLV 2	7.15	-22778	-12052	12896.47		20886	3.895	12510	13644			1.13	Si
SLV 14	5.25	-22662	12730	10116.66		20779	3.895	12489	13621			1.07	Si
SLV 14	7.15	-21615	10846	-12457.53		19819	3.895	12297	13411			1.24	Si
SLV 1	5.25	-26136	-13476	-11311.29		23965	3.895	13126	14315			1.06	Si
SLV 1	7.15	-22778	-12052	12896.47		20886	3.895	12510	13644			1.13	Si
SLV 10	5.25	-12988	4175	2997.26		11909	3.895	10715	11686			2.8	Si
SLV 10	7.15	-13747	2911	-3944.11		12605	3.895	10854	11838			4.07	Si
SLV 9	5.25	-12988	4175	2997.26		11909	3.895	10715	11686			2.8	Si
SLV 9	7.15	-13747	2911	-3944.11		12605	3.895	10854	11838			4.07	Si
SLV 16	5.25	-31996	12201	9790.61		29338	3.895	14201	15488			1.27	Si
SLV 16	7.15	-28707	10779	-12148.55		26322	3.895	13598	14830			1.38	Si
SLV 3	5.25	-35470	-14006	-11637.33		32524	3.895	14838	16182			1.16	Si
SLV 3	7.15	-29870	-12120	13205.46		27389	3.895	13811	15062			1.24	Si
SLV 4	5.25	-35470	-14006	-11637.33		32524	3.895	14838	16182			1.16	Si
SLV 4	7.15	-29870	-12120	13205.46		27389	3.895	13811	15062			1.24	Si

Verifica a pressoflessione fuori piano D.M. 17-01-18 (N.T.C.)

quota 6.125 Wa 0.05 denominatore 8 γM = 2

Comb.	fd	Sa	σ0	N	M	Mc	Coeff.s.	Verifica
SLV 10	143750	0.38	13118	-14306	396.3	1787.84	4.51	Si
SLV 9	143750	0.38	13118	-14306	396.3	1787.84	4.51	Si
SLV 6	143750	0.38	13643	-14879	396.3	1850.45	4.67	Si
SLV 5	143750	0.38	13643	-14879	396.3	1850.45	4.67	Si
SLV 13	143750	0.38	21002	-22905	396.3	2655.51	6.7	Si
SLV 14	143750	0.38	21002	-22905	396.3	2655.51	6.7	Si
SLV 1	143750	0.38	22752	-24814	396.3	2827.04	7.13	Si
SLV 2	143750	0.38	22752	-24814	396.3	2827.04	7.13	Si
SLV 16	143750	0.38	28285	-30848	396.3	3318.96	8.37	Si
SLV 15	143750	0.38	28285	-30848	396.3	3318.96	8.37	Si

Verifica dei meccanismi locali di collasso con analisi cinematica lineare

forza di aggancio al piano = 0 quota mezzeria = 6.125 Wa = 0.05 Ta = 0.0752

Comb.	N top	N base	V orto	α0	M*	e*	a0*	aLim	Verifica
SLV 3	-25099	-33390	80	0.041	3102.8	0.949	0.63438	11.26714	No
SLV 4	-25099	-33390	80	0.041	3102.8	0.949	0.63438	11.26714	No
SLV 9	-12405	-12001	-188	0.036	1819.2	0.921	0.57244	9.97238	No
SLV 10	-12405	-12001	-188	0.036	1819.2	0.921	0.57244	9.97238	No
SLV 13	-18642	-21522	-81	0.042	2448.2	0.938	0.6509	11.26714	No
SLV 14	-18642	-21522	-81	0.042	2448.2	0.938	0.6509	11.26714	No
SLV 8	-31336	-42911	187	0.038	3736.4	0.957	0.57723	9.97238	No
SLV 7	-31336	-42911	187	0.038	3736.4	0.957	0.57723	9.97238	No
SLV 11	-31079	-42056	171	0.038	3710.4	0.957	0.58428	9.97238	No
SLV 12	-31079	-42056	171	0.038	3710.4	0.957	0.58428	9.97238	No

Tabella dei coefficienti di sicurezza minimi

Stato limite	Coeff.s.	Comb.	Verifica
PF_SLU	37.048	SLU 48	Si
V_SLU	9.905	SLU 48	Si
PF_SLV	2.831	SLV 13	Si
V_SLV	1.062	SLV 1	Si
PFFP_SLV	4.511	SLV 9	Si
R_SLV	0.056	SLV 3	No

Maschio 145

Verifiche condotte secondo D.M. 17-01-18 (N.T.C.)

Dati geometrici

X ini.	Y ini.	X fin.	Y fin.	Quota i.	Quota.s	l	Sp.	h netta	h ini.	h fin.	a	a.s.,sx	a.s.,dx
-11.901	6.536	-8.007	6.536	L4	L5	3.893	0.28	3.55	3.55	3.55			

Caratteristiche del materiale

(Circolare 7 21-01-19 C8.5.I) Muratura in mattoni pieni e malta di calce LC2_Corti

fb	fk	fvk0	fmedio	τ0	fv0	μ	ϕ	fv,lim	E	G	FC
600000			345000	9000	20000	0.58	0.77	32500	320000000	128000000	1.2

Verifica a pressoflessione nel piano secondo D.M. 17-01-18 NTC §7.8.2.2.1 in combinazioni non sismiche, γM = 3

Comb.	Quota	N	M	σ0	Mu	c.s.	Verifica
SLU 46	5.25	-34488	689.94	31637	41061.09	59.514	Si
SLU 46	7.15	-30118	-753.75	27628	38743.07	51.4	Si
SLU 49	5.25	-35549	737.5	32610	41497.13	56.267	Si
SLU 49	7.15	-31189	-820.51	28611	39389.03	48.005	Si
SLU 45	5.25	-34468	686.79	31618	41052.08	59.774	Si
SLU 45	7.15	-30097	-751.08	27609	38730.18	51.566	Si
SLU 72	5.25	-38839	691.66	35628	42536.64	61.5	Si
SLU 72	7.15	-34517	-782.38	31664	41073.61	52.498	Si
SLU 69	5.25	-39315	698.02	36065	42647.79	61.098	Si
SLU 69	7.15	-34993	-788.53	32101	41274.98	52.344	Si
SLU 51	5.25	-35051	727.98	32154	41298.84	56.73	Si
SLU 51	7.15	-30693	-811.69	28156	39095.88	48.166	Si
SLU 47	5.25	-34005	682.52	31194	40845.98	59.846	Si
SLU 47	7.15	-29634	-746.71	27185	38435.45	51.473	Si
SLU 70	5.25	-39336	701.17	36084	42652.4	60.83	Si
SLU 70	7.15	-35014	-791.21	32120	41283.45	52.178	Si
SLU 50	5.25	-35031	724.84	32135	41290.34	56.965	Si
SLU 50	7.15	-30672	-809.01	28137	39083.52	48.31	Si
SLU 48	5.25	-35528	734.35	32591	41489.09	56.497	Si
SLU 48	7.15	-31169	-817.84	28592	39377.12	48.148	Si

Verifica a pressoflessione nel piano secondo D.M. 17-01-18 NTC §7.8.2.2.1 in combinazioni sismiche, γM = 2

Comb.	Quota	N	M	σ0	Mu	c.s.	Verifica
SLV 15	5.25	-35053	10913.62	32156	50278.33	4.607	Si
SLV 15	7.15	-29411	-12558.67	26980	44610.22	3.552	Si
SLV 1	5.25	-21836	-10032.98	20031	35538.2	3.542	Si
SLV 1	7.15	-20858	11592.7	19134	34244.8	2.954	Si
SLV 10	5.25	-12499	2421.11	11466	22047.42	9.106	Si
SLV 10	7.15	-12779	-4422.93	11723	22489.14	5.085	Si
SLV 9	5.25	-12499	2421.11	11466	22047.42	9.106	Si
SLV 9	7.15	-12779	-4422.93	11723	22489.14	5.085	Si
SLV 16	5.25	-35053	10913.62	32156	50278.33	4.607	Si
SLV 16	7.15	-29411	-12558.67	26980	44610.22	3.552	Si
SLV 3	5.25	-31705	-9393.79	29084	47027.06	5.006	Si
SLV 3	7.15	-28366	11767.32	26021	43458.21	3.693	Si
SLV 14	5.25	-25184	10274.42	23103	39755.35	3.869	Si
SLV 14	7.15	-21903	-12733.3	20093	35626.15	2.798	Si
SLV 4	5.25	-31705	-9393.79	29084	47027.06	5.006	Si
SLV 4	7.15	-28366	11767.32	26021	43458.21	3.693	Si
SLV 13	5.25	-25184	10274.42	23103	39755.35	3.869	Si
SLV 13	7.15	-21903	-12733.3	20093	35626.15	2.798	Si
SLV 2	5.25	-21836	-10032.98	20031	35538.2	3.542	Si
SLV 2	7.15	-20858	11592.7	19134	34244.8	2.954	Si

Verifica a taglio nel piano secondo D.M. 17-01-18 (N.T.C.) §7.8.2.2.2 con rottura per scorrimento in combinazioni non sismiche, γM = 3

Comb.	Quota	N	V par	M	σ0	σN	I'	fvd	Vt scorr.	Vt fess.diag.	Vt,lim	c.s.	Verifica
SLU 48	5.25	-35528	857	734.35		32591	3.8933	9901	10793			12.59	Si
SLU 48	7.15	-31169	856	-817.84		28592	3.8933	9368	10212			11.93	Si
SLU 45	5.25	-34468	796	686.79		31618	3.8933	9771	10652			13.38	Si
SLU 45	7.15	-30097	795	-751.08		27609	3.8933	9237	10069			12.67	Si
SLU 50	5.25	-35031	848	724.84		32135	3.8933	9840	10727			12.66	Si
SLU 50	7.15	-30672	846	-809.01		28137	3.8933	9307	10146			11.99	Si
SLU 46	5.25	-34488	799	689.94		31637	3.8933	9774	10655			13.34	Si
SLU 46	7.15	-30118	798	-753.75		27628	3.8933	9239	10072			12.63	Si
SLU 49	5.25	-35549	860	737.5		32610	3.8933	9904	10796			12.55	Si
SLU 49	7.15	-31189	859	-820.51		28611	3.8933	9370	10215			11.89	Si
SLU 47	5.25	-34005	791	682.52		31194	3.8933	9715	10590			13.38	Si
SLU 47	7.15	-29634	790	-746.71		27185	3.8933	9180	10007			12.67	Si
SLU 51	5.25	-35051	851	727.98		32154	3.8933	9843	10730			12.61	Si
SLU 51	7.15	-30693	850	-811.69		28156	3.8933	9310	10149			11.95	Si
SLU 69	5.25	-39315	833	698.02		36065	3.8933	10364	11298			13.56	Si
SLU 69	7.15	-34993	832	-788.53		32101	3.8933	9836	10722			12.89	Si
SLU 70	5.25	-39336	836	701.17		36084	3.8933	10367	11301			13.52	Si
SLU 70	7.15	-35014	835	-791.21		32120	3.8933	9838	10725			12.85	Si
SLU 72	5.25	-38839	827	691.66		35628	3.8933	10306	11235			13.59	Si
SLU 72	7.15	-34517	825	-782.38		31664	3.8933	9777	10658			12.92	Si

Verifica a taglio nel piano secondo D.M. 17-01-18 (N.T.C.) §7.8.2.2.2 con rottura per scorrimento in combinazioni sismiche, γM = 2

Comb.	Quota	N	V par	M	σ0	σN	I'	fvd	Vt scorr.	Vt fess.diag.	Vt,lim	c.s.	Verifica
SLV 2	5.25	-21836	-12356	-10032.98		20031	3.8933	12340	13451			1.09	Si
SLV 2	7.15	-20858	-10429	11592.7		19134	3.8933	12160	13256			1.27	Si
SLV 13	5.25	-25184	13118	10274.42		23103	3.8933	12954	14121			1.08	Si
SLV 13	7.15	-21903	11557	-12733.3		20093	3.8933	12352	13465			1.17	Si
SLV 10	5.25	-12499	3865	2421.11		11466	3.8933	10626	11584			3	Si
SLV 10	7.15	-12779	3955	-4422.93		11723	3.8933	10678	11640			2.94	Si
SLV 16	5.25	-35053	13406	10913.62		32156	3.8933	14764	16095			1.2	Si
SLV 16	7.15	-29411	11477	-12558.67		26980	3.8933	13729	14966			1.3	Si
SLV 3	5.25	-31705	-12067	-9393.79		29084	3.8933	14150	15425			1.28	Si
SLV 3	7.15	-28366	-10508	11767.32		26021	3.8933	13537	14757			1.4	Si
SLV 15	5.25	-35053	13406	10913.62		32156	3.8933	14764	16095			1.2	Si
SLV 15	7.15	-29411	11477	-12558.67		26980	3.8933	13729	14966			1.3	Si
SLV 14	5.25	-25184	13118	10274.42		23103	3.8933	12954	14121			1.08	Si
SLV 14	7.15	-21903	11557	-12733.3		20093	3.8933	12352	13465			1.17	Si
SLV 4	5.25	-31705	-12067	-9393.79		29084	3.8933	14150	15425			1.28	Si
SLV 4	7.15	-28366	-10508	11767.32		26021	3.8933	13537	14757			1.4	Si
SLV 1	5.25	-21836	-12356	-10032.98		20031	3.8933	12340	13451			1.09	Si
SLV 1	7.15	-20858	-10429	11592.7		19134	3.8933	12160	13256			1.27	Si
SLV 9	5.25	-12499	3865	2421.11		11466	3.8933	10626	11584			3	Si
SLV 9	7.15	-12779	3955	-4422.93		11723	3.8933	10678	11640			2.94	Si

Verifica a pressoflessione fuori piano D.M. 17-01-18 (N.T.C.)

quota 6.125 Wa 0.05 denominatore 8 γM = 2

Comb.	fd	Sa	σ0	N	M	Mc	Coeff.s.	Verifica
SLV 5	143750	0.38	11891	-12962	396.12	1638.14	4.14	Si
SLV 6	143750	0.38	11891	-12962	396.12	1638.14	4.14	Si
SLV 10	143750	0.38	12342	-13454	396.12	1693.35	4.27	Si
SLV 9	143750	0.38	12342	-13454	396.12	1693.35	4.27	Si
SLV 2	143750	0.38	20352	-22186	396.12	2588.64	6.54	Si
SLV 1	143750	0.38	20352	-22186	396.12	2588.64	6.54	Si
SLV 13	143750	0.38	21856	-23825	396.12	2738.9	6.91	Si
SLV 14	143750	0.38	21856	-23825	396.12	2738.9	6.91	Si
SLV 3	143750	0.38	28055	-30583	396.12	3298.53	8.33	Si
SLV 4	143750	0.38	28055	-30583	396.12	3298.53	8.33	Si

Verifica dei meccanismi locali di collasso con analisi cinematica lineare

forza di aggancio al piano = 0 quota mezzeria = 6.125 Wa = 0.05 Ta = 0.0752

Comb.	N top	N base	V orto	α0	M*	e*	a0*	aLim	Verifica
SLV 16	-23950	-32964	45	0.043	2985.9	0.947	0.65659	11.26714	No
SLV 15	-23950	-32964	45	0.043	2985.9	0.947	0.65659	11.26714	No
SLV 4	-23621	-29868	30	0.043	2952.6	0.947	0.66614	11.26714	No
SLV 3	-23621	-29868	30	0.043	2952.6	0.947	0.66614	11.26714	No
SLV 1	-17858	-20464	-45	0.044	2368.7	0.936	0.67915	11.26714	No
SLV 2	-17858	-20464	-45	0.044	2368.7	0.936	0.67915	11.26714	No
SLV 12	-30558	-42852	127	0.04	3657.2	0.956	0.6039	9.97238	No
SLV 11	-30558	-42852	127	0.04	3657.2	0.956	0.6039	9.97238	No
SLV 7	-30460	-41923	123	0.04	3647.1	0.956	0.60602	9.97238	No
SLV 8	-30460	-41923	123	0.04	3647.1	0.956	0.60602	9.97238	No

Tabella dei coefficienti di sicurezza minimi

Stato limite	Coeff.s.	Comb.	Verifica
PF_SLU	48.005	SLU 49	Si
V_SLU	11.89	SLU 49	Si
PF_SLV	2.798	SLV 13	Si
V_SLV	1.077	SLV 13	Si
PFFP_SLV	4.135	SLV 5	Si
R_SLV	0.058	SLV 15	No

Maschio 146

Verifiche condotte secondo D.M. 17-01-18 (N.T.C.)

Dati geometrici

X ini.	Y ini.	X fin.	Y fin.	Quota i.	Quota.s	l	Sp.	h netta	h ini.	h fin.	a	a.s.,sx	a.s.,dx
-7.007	6.536	-5.105	6.536	L4	L5	1.902	0.28	3.55	3.55	3.55			

Caratteristiche del materiale

(Circolare 7 21-01-19 C8.5.I) Muratura in mattoni pieni e malta di calce LC2_Corti

fb	fk	fvk0	fmedio	τ0	fv0	μ	ϕ	fv,lim	E	G	FC
600000			345000	9000	20000	0.58	0.77	32500	320000000	128000000	1.2

Verifica a pressoflessione nel piano secondo D.M. 17-01-18 NTC §7.8.2.2.1 in combinazioni non sismiche, γM = 3

Comb.	Quota	N	M	σ0	Mu	c.s.	Verifica
SLU 81	5.25	-19124	197.57	35904	10172.8	51.49	Si
SLU 81	7.15	-19193	-1892.24	36032	10180.41	5.38	Si
SLU 84	5.25	-19638	193.13	36869	10224.94	52.945	Si
SLU 84	7.15	-19748	-1928.91	37074	10234.53	5.306	Si
SLU 77	5.25	-19690	165.95	36966	10229.56	61.641	Si
SLU 77	7.15	-19727	-1879.58	37035	10232.76	5.444	Si
SLU 82	5.25	-19130	193.38	35915	10173.5	52.609	Si
SLU 82	7.15	-19189	-1891.72	36026	10180.05	5.381	Si
SLU 74	5.25	-19182	166.21	36013	10179.28	61.244	Si
SLU 74	7.15	-19169	-1842.4	35987	10177.77	5.524	Si
SLU 80	5.25	-19468	164	36549	10208.95	62.249	Si
SLU 80	7.15	-19475	-1860.35	36562	10209.62	5.488	Si
SLU 78	5.25	-19696	161.77	36978	10230.11	63.24	Si
SLU 78	7.15	-19724	-1879.07	37029	10232.47	5.445	Si
SLU 75	5.25	-19189	162.02	36024	10179.96	62.831	Si
SLU 75	7.15	-19165	-1841.88	35981	10177.4	5.526	Si
SLU 79	5.25	-19462	168.19	36537	10208.34	60.696	Si
SLU 79	7.15	-19478	-1860.86	36568	10209.95	5.487	Si
SLU 83	5.25	-19632	197.31	36857	10224.38	51.818	Si
SLU 83	7.15	-19751	-1929.42	37080	10234.82	5.305	Si

Verifica a pressoflessione nel piano secondo D.M. 17-01-18 NTC §7.8.2.2.1 in combinazioni sismiche, γM = 2

Comb.	Quota	N	M	σ0	Mu	c.s.	Verifica
SLV 4	5.25	-16548	-3340.27	31068	11738.14	3.514	Si
SLV 4	7.15	-10708	2167.59	20103	8509.29	3.926	Si
SLV 14	5.25	-9560	3511.47	17948	7757.69	2.209	Si
SLV 14	7.15	-14805	-4579.45	27795	10878.76	2.376	Si
SLV 9	5.25	-5369	1703.21	10080	4685.86	2.751	Si
SLV 9	7.15	-7800	-1825.27	14644	6530.07	3.578	Si
SLV 15	5.25	-13936	3122.56	26163	10417.25	3.336	Si
SLV 15	7.15	-18478	-4838.38	34691	12585.84	2.601	Si
SLV 3	5.25	-16548	-3340.27	31068	11738.14	3.514	Si
SLV 3	7.15	-10708	2167.59	20103	8509.29	3.926	Si
SLV 16	5.25	-13936	3122.56	26163	10417.25	3.336	Si
SLV 16	7.15	-18478	-4838.38	34691	12585.84	2.601	Si

Comb.	Quota	N	M	σ0	Mu	c.s.	Verifica
SLV 13	5.25	-9560	3511.47	17948	7757.69	2.209	Si
SLV 13	7.15	-14805	-4579.45	27795	10878.76	2.376	Si
SLV 1	5.25	-12172	-2951.35	22852	9412.68	3.189	Si
SLV 1	7.15	-7035	2426.53	13207	5967.98	2.459	Si
SLV 2	5.25	-12172	-2951.35	22852	9412.68	3.189	Si
SLV 2	7.15	-7035	2426.53	13207	5967.98	2.459	Si
SLV 10	5.25	-5369	1703.21	10080	4685.86	2.751	Si
SLV 10	7.15	-7800	-1825.27	14644	6530.07	3.578	Si

Verifica a taglio nel piano secondo D.M. 17-01-18 (N.T.C.) §7.8.2.2.2 con rottura per scorrimento in combinazioni non sismiche, γM = 3

Comb.	Quota	N	V par	M	σ0	σN	I'	fvd	Vt scorr.	Vt fess.diag.	Vt,lim	c.s.	Verifica
SLU 80	5.25	-19468	2222	164		36549	1.9023	10429	5555			2.5	Si
SLU 80	7.15	-19475	2254	-1860.35		36562	1.9023	10430	5556			2.47	Si
SLU 82	5.25	-19130	2279	193.38		35915	1.9023	10344	5510			2.42	Si
SLU 82	7.15	-19189	2312	-1891.72		36026	1.9023	10359	5518			2.39	Si
SLU 83	5.25	-19632	2330	197.31		36857	1.9023	10470	5577			2.39	Si
SLU 83	7.15	-19751	2365	-1929.42		37080	1.9023	10500	5593			2.36	Si
SLU 84	5.25	-19638	2324	193.13		36869	1.9023	10471	5578			2.4	Si
SLU 84	7.15	-19748	2357	-1928.91		37074	1.9023	10499	5592			2.37	Si
SLU 77	5.25	-19690	2246	165.95		36966	1.9023	10484	5585			2.49	Si
SLU 77	7.15	-19727	2281	-1879.58		37035	1.9023	10494	5589			2.45	Si
SLU 74	5.25	-19182	2202	166.21		36013	1.9023	10357	5517			2.51	Si
SLU 74	7.15	-19169	2236	-1842.4		35987	1.9023	10354	5515			2.47	Si
SLU 75	5.25	-19189	2196	162.02		36024	1.9023	10359	5518			2.51	Si
SLU 75	7.15	-19165	2228	-1841.88		35981	1.9023	10353	5515			2.48	Si
SLU 78	5.25	-19696	2241	161.77		36978	1.9023	10486	5585			2.49	Si
SLU 78	7.15	-19724	2273	-1879.07		37029	1.9023	10493	5589			2.46	Si
SLU 79	5.25	-19462	2228	168.19		36537	1.9023	10427	5554			2.49	Si
SLU 79	7.15	-19478	2262	-1860.86		36568	1.9023	10431	5556			2.46	Si
SLU 81	5.25	-19124	2285	197.57		35904	1.9023	10343	5509			2.41	Si
SLU 81	7.15	-19193	2320	-1892.24		36032	1.9023	10360	5518			2.38	Si

Verifica a taglio nel piano secondo D.M. 17-01-18 (N.T.C.) §7.8.2.2.2 con rottura per scorrimento in combinazioni sismiche, γM = 2

Comb.	Quota	N	V par	M	σ0	σN	I'	fvd	Vt scorr.	Vt fess.diag.	Vt,lim	c.s.	Verifica
SLV 14	5.25	-9560	8927	3511.47		19493	1.7516	12232	5999			0.67	No, Vu<V
SLV 14	7.15	-14805	7839	-4579.45		27795	1.9023	13892	7400			0.94	No, Vu<V
SLV 3	5.25	-16548	-6097	-3340.27		31068	1.9023	14547	7748			1.27	Si
SLV 3	7.15	-10708	-4961	2167.59		20103	1.9023	12354	6580			1.33	Si
SLV 16	5.25	-13936	7395	3122.56		26163	1.9023	13566	7226			0.98	No, Vu<V
SLV 16	7.15	-18478	6405	-4838.38		34691	1.9023	15271	8134			1.27	Si
SLV 15	5.25	-13936	7395	3122.56		26163	1.9023	13566	7226			0.98	No, Vu<V
SLV 15	7.15	-18478	6405	-4838.38		34691	1.9023	15271	8134			1.27	Si
SLV 10	5.25	-5369	5993	1703.21		10083	1.9019	10350	5512			0.92	No, Vu<V
SLV 10	7.15	-7800	5534	-1825.27		14644	1.9023	11262	5999			1.08	Si
SLV 13	5.25	-9560	8927	3511.47		19493	1.7516	12232	5999			0.67	No, Vu<V
SLV 13	7.15	-14805	7839	-4579.45		27795	1.9023	13892	7400			0.94	No, Vu<V
SLV 4	5.25	-16548	-6097	-3340.27		31068	1.9023	14547	7748			1.27	Si
SLV 4	7.15	-10708	-4961	2167.59		20103	1.9023	12354	6580			1.33	Si
SLV 9	5.25	-5369	5993	1703.21		10083	1.9019	10350	5512			0.92	No, Vu<V
SLV 9	7.15	-7800	5534	-1825.27		14644	1.9023	11262	5999			1.08	Si
SLV 2	5.25	-12172	-4565	-2951.35		22852	1.9023	12904	6873			1.51	Si
SLV 2	7.15	-7035	-3527	2426.53		13814	1.8187	11096	5651			1.6	Si
SLV 1	5.25	-12172	-4565	-2951.35		22852	1.9023	12904	6873			1.51	Si
SLV 1	7.15	-7035	-3527	2426.53		13814	1.8187	11096	5651			1.6	Si

Verifica a pressoflessione fuori piano D.M. 17-01-18 (N.T.C.)

quota 6.125 Wa 0.05 denominatore 8 γM = 2

Comb.	fd	Sa	σ0	N	M	Mc	Coeff.s.	Verifica
SLV 6	143750	0.38	11728	-6247	193.55	790.66	4.08	Si
SLV 5	143750	0.38	11728	-6247	193.55	790.66	4.08	Si
SLV 10	143750	0.38	13906	-7407	193.55	918.99	4.75	Si
SLV 9	143750	0.38	13906	-7407	193.55	918.99	4.75	Si
SLV 2	143750	0.38	17754	-9457	193.55	1131.55	5.85	Si
SLV 1	143750	0.38	17754	-9457	193.55	1131.55	5.85	Si
SLV 14	143750	0.38	25013	-13323	193.55	1483.43	7.66	Si
SLV 13	143750	0.38	25013	-13323	193.55	1483.43	7.66	Si
SLV 3	143750	0.38	25096	-13367	193.55	1487.07	7.68	Si
SLV 4	143750	0.38	25096	-13367	193.55	1487.07	7.68	Si

Verifica dei meccanismi locali di collasso con analisi cinematica lineare

forza di aggancio al piano = 0 quota mezzeria = 6.125 Wa = 0.05 Ta = 0.0752

Comb.	N top	N base	V orto	α0	M*	e*	a0*	aLim	Verifica
SLV 5	-6174	-4908	-202	0.022	900.1	0.922	0.35221	9.97238	No
SLV 6	-6174	-4908	-202	0.022	900.1	0.922	0.35221	9.97238	No
SLV 10	-7352	-5742	-186	0.026	1018.6	0.929	0.41213	9.97238	No
SLV 9	-7352	-5742	-186	0.026	1018.6	0.929	0.41213	9.97238	No
SLV 11	-15259	-19882	202	0.032	1820.2	0.957	0.47865	9.97238	No
SLV 12	-15259	-19882	202	0.032	1820.2	0.957	0.47865	9.97238	No
SLV 7	-14081	-19048	185	0.032	1700.5	0.954	0.48657	9.97238	No
SLV 8	-14081	-19048	185	0.032	1700.5	0.954	0.48657	9.97238	No
SLV 15	-13865	-15907	85	0.038	1678.6	0.954	0.58371	11.26714	No
SLV 16	-13865	-15907	85	0.038	1678.6	0.954	0.58371	11.26714	No

Tabella dei coefficienti di sicurezza minimi

Stato limite	Coeff.s.	Comb.	Verifica
PF_SLU	5.305	SLU 83	Si
V_SLU	2.365	SLU 83	Si
PF_SLV	2.209	SLV 13	Si
V_SLV	0.672	SLV 13	No

Stato limite	Coeff.s.	Comb.	Verifica
PFFP_SLV	4.085	SLV 5	Si
R_SLV	0.035	SLV 5	No

Maschio 147

Verifiche condotte secondo D.M. 17-01-18 (N.T.C.)

Dati geometrici

X ini.	Y ini.	X fin.	Y fin.	Quota i.	Quota.s	l	Sp.	h netta	h ini.	h fin.	a	a.s.,sx	a.s.,dx
-11.003	-4.784	-11.003	-3.509	L4	Z medio 611 cm	1.275	0.28	1.76	1.76	1.76			

Caratteristiche del materiale

(Circolare 7 21-01-19 C8.5.I) Muratura in mattoni pieni e malta di calce LC2_Corti

fb	fk	fvk0	fmedio	τ0	fv0	μ	ϕ	fv,lim	E	G	FC
600000			345000	9000	20000	0.58	0.77	32500	320000000	128000000	1.2

Verifica a pressoflessione nel piano secondo D.M. 17-01-18 NTC §7.8.2.2.1 in combinazioni non sismiche, γM = 3

Comb.	Quota	N	M	σ0	Mu	c.s.	Verifica
SLU 36	4.35	-11551	78.17	32357	4438.88	56.784	Si
SLU 36	6.11	-9586	165.48	26852	4096.65	24.756	Si
SLU 35	4.35	-11525	77.98	32284	4435.47	56.88	Si
SLU 35	6.11	-9583	165.79	26844	4096.05	24.707	Si
SLU 41	4.35	-11721	70.77	32831	4460.44	63.029	Si
SLU 41	6.11	-9713	174.02	27208	4123.92	23.698	Si
SLU 39	4.35	-11516	66.13	32257	4434.19	67.05	Si
SLU 39	6.11	-9510	166.97	26640	4080.11	24.436	Si
SLU 40	4.35	-11542	66.32	32330	4437.61	66.908	Si
SLU 40	6.11	-9513	166.66	26648	4080.72	24.485	Si
SLU 32	4.35	-11321	73.35	31710	4407.47	60.092	Si
SLU 32	6.11	-9380	158.74	26276	4051.08	25.52	Si
SLU 83	4.35	-14154	81.8	39646	4631.44	56.619	Si
SLU 83	6.11	-11706	180.2	32790	4458.62	24.743	Si
SLU 84	4.35	-14179	81.99	39718	4631.87	56.492	Si
SLU 84	6.11	-11709	179.89	32798	4458.97	24.787	Si
SLU 42	4.35	-11747	70.96	32904	4463.62	62.904	Si
SLU 42	6.11	-9716	173.71	27216	4124.51	23.744	Si
SLU 37	4.35	-11472	73.68	32136	4428.4	60.1	Si
SLU 37	6.11	-9535	159.8	26708	4085.46	25.566	Si

Verifica a pressoflessione nel piano secondo D.M. 17-01-18 NTC §7.8.2.2.1 in combinazioni sismiche, γM = 2

Comb.	Quota	N	M	σ0	Mu	c.s.	Verifica
SLV 16	4.35	-8431	519.93	23615	4335.79	8.339	Si
SLV 16	6.11	-6546	-251.6	18335	3546.72	14.097	Si
SLV 7	4.35	-4341	446.64	12160	2492.09	5.58	Si
SLV 7	6.11	-3797	-50.38	10635	2209.78	43.858	Si
SLV 6	4.35	-14814	-531.06	41497	6236.75	11.744	Si
SLV 6	6.11	-12218	383.55	34224	5607.31	14.619	Si
SLV 1	4.35	-10920	-412.59	30590	5218.92	12.649	Si
SLV 1	6.11	-9377	421.8	26267	4692.96	11.126	Si
SLV 15	4.35	-8431	519.93	23615	4335.79	8.339	Si
SLV 15	6.11	-6546	-251.6	18335	3546.72	14.097	Si
SLV 2	4.35	-10920	-412.59	30590	5218.92	12.649	Si
SLV 2	6.11	-9377	421.8	26267	4692.96	11.126	Si
SLV 11	4.35	-4537	638.41	12708	2591.42	4.059	Si
SLV 11	6.11	-3705	-213.35	10379	2161.43	10.131	Si
SLV 12	4.35	-4537	638.41	12708	2591.42	4.059	Si
SLV 12	6.11	-3705	-213.35	10379	2161.43	10.131	Si
SLV 8	4.35	-4341	446.64	12160	2492.09	5.58	Si
SLV 8	6.11	-3797	-50.38	10635	2209.78	43.858	Si
SLV 5	4.35	-14814	-531.06	41497	6236.75	11.744	Si
SLV 5	6.11	-12218	383.55	34224	5607.31	14.619	Si

Verifica a taglio nel piano secondo D.M. 17-01-18 (N.T.C.) §7.8.2.2.2 con rottura per scorrimento in combinazioni non sismiche, γM = 3

Comb.	Quota	N	V par	M	σ0	σN	l'	fvd	Vt scorr.	Vt fess.diag.	Vt,lim	c.s.	Verifica
SLU 84	4.35	-14179	-209	81.99		39718	1.275	10833	3867			18.52	Si
SLU 84	6.11	-11709	-66	179.89		32798	1.275	9929	3545			53.77	Si
SLU 39	4.35	-11516	-207	66.13		32257	1.275	9857	3519			17.04	Si
SLU 39	6.11	-9510	-77	166.97		26640	1.275	9108	3251			42.35	Si
SLU 42	4.35	-11747	-233	70.96		32904	1.275	9943	3550			15.21	Si
SLU 42	6.11	-9716	-108	173.71		27216	1.275	9184	3279			30.24	Si
SLU 33	4.35	-11346	-199	73.54		31783	1.275	9793	3496			17.6	Si
SLU 33	6.11	-9383	-79	158.43		26284	1.275	9060	3234			40.83	Si
SLU 38	4.35	-11498	-202	73.87		32208	1.275	9850	3516			17.41	Si
SLU 38	6.11	-9538	-80	159.5		26716	1.275	9118	3255			40.81	Si
SLU 34	4.35	-11311	-206	69.37		31683	1.275	9780	3491			16.98	Si
SLU 34	6.11	-9337	-93	152.24		26153	1.275	9043	3228			34.78	Si
SLU 41	4.35	-11721	-215	70.77		32831	1.275	9933	3546			16.48	Si
SLU 41	6.11	-9713	-82	174.02		27208	1.275	9183	3278			40.18	Si
SLU 36	4.35	-11551	-207	78.17		32357	1.275	9870	3524			17	Si
SLU 36	6.11	-9586	-84	165.48		26852	1.275	9136	3261			38.81	Si
SLU 40	4.35	-11542	-225	66.32		32330	1.275	9866	3522			15.67	Si
SLU 40	6.11	-9513	-104	166.66		26648	1.275	9109	3252			31.38	Si
SLU 31	4.35	-11106	-197	64.73		31109	1.275	9703	3464			17.59	Si
SLU 31	6.11	-9134	-88	145.2		25585	1.275	8967	3201			36.38	Si

Verifica a taglio nel piano secondo D.M. 17-01-18 (N.T.C.) §7.8.2.2.2 con rottura per scorrimento in combinazioni sismiche, γM = 2

Comb.	Quota	N	V par	M	σ0	σN	l'	fvd	Vt scorr.	Vt fess.diag.	Vt,lim	c.s.	Verifica
SLV 5	4.35	-14814	-3479	-531.06		41497	1.275	16250	5801			1.67	Si
SLV 5	6.11	-12218	-3165	383.55		34224	1.275	15178	5419			1.71	Si
SLV 1	4.35	-10920	-3366	-412.59		30590	1.275	14451	5159			1.53	Si
SLV 1	6.11	-9377	-3146	421.8		26267	1.275	13587	4850			1.54	Si
SLV 8	4.35	-4341	1874	446.64		12160	1.275	10765	3843			2.05	Si
SLV 8	6.11	-3797	1791	-50.38		10635	1.275	10460	3734			2.08	Si
SLV 12	4.35	-4537	3383	638.41		12708	1.275	10875	3882			1.15	Si
SLV 12	6.11	-3705	3262	-213.35		10379	1.275	10409	3716			1.14	Si
SLV 11	4.35	-4537	3383	638.41		12708	1.275	10875	3882			1.15	Si
SLV 11	6.11	-3705	3262	-213.35		10379	1.275	10409	3716			1.14	Si
SLV 7	4.35	-4341	1874	446.64		12160	1.275	10765	3843			2.05	Si
SLV 7	6.11	-3797	1791	-50.38		10635	1.275	10460	3734			2.08	Si
SLV 15	4.35	-8431	3270	519.93		23615	1.275	13056	4661			1.43	Si
SLV 15	6.11	-6546	3242	-251.6		18335	1.275	12000	4284			1.32	Si
SLV 16	4.35	-8431	3270	519.93		23615	1.275	13056	4661			1.43	Si
SLV 16	6.11	-6546	3242	-251.6		18335	1.275	12000	4284			1.32	Si
SLV 2	4.35	-10920	-3366	-412.59		30590	1.275	14451	5159			1.53	Si
SLV 2	6.11	-9377	-3146	421.8		26267	1.275	13587	4850			1.54	Si
SLV 6	4.35	-14814	-3479	-531.06		41497	1.275	16250	5801			1.67	Si
SLV 6	6.11	-12218	-3165	383.55		34224	1.275	15178	5419			1.71	Si

Verifica a pressoflessione fuori piano D.M. 17-01-18 (N.T.C.)

quota 5.23 Wa 0.05 denominatore 8 γM = 2

Comb.	fd	Sa	σ0	N	M	Mc	Coeff.s.	Verifica
SLV 11	143750	0.36	11710	-4180	30.96	529.17	17.09	Si
SLV 12	143750	0.36	11710	-4180	30.96	529.17	17.09	Si
SLV 8	143750	0.36	11910	-4252	30.96	537.24	17.35	Si
SLV 7	143750	0.36	11910	-4252	30.96	537.24	17.35	Si
SLV 16	143750	0.36	20603	-7355	30.96	856.09	27.65	Si
SLV 15	143750	0.36	20603	-7355	30.96	856.09	27.65	Si
SLV 3	143750	0.36	21270	-7593	30.96	878.01	28.36	Si
SLV 4	143750	0.36	21270	-7593	30.96	878.01	28.36	Si
SLV 13	143750	0.36	28425	-10148	30.96	1090.19	35.21	Si
SLV 14	143750	0.36	28425	-10148	30.96	1090.19	35.21	Si

Verifica dei meccanismi locali di collasso con analisi cinematica lineare

forza di aggancio al piano = 0 quota mezzeria = 5.23 Wa = 0.05 Ta = 0.0185

Comb.	N top	N base	V orto	α0	M*	e*	a0*	aLim	Verifica
SLV 11	-3705	-4537	138	0.058	466.2	0.946	0.88953	4.00899	No
SLV 12	-3705	-4537	138	0.058	466.2	0.946	0.88953	4.00899	No
SLV 8	-3797	-4341	123	0.062	475.5	0.947	0.94527	4.00899	No
SLV 7	-3797	-4341	123	0.062	475.5	0.947	0.94527	4.00899	No
SLV 15	-6546	-8431	74	0.075	754.9	0.965	1.13646	4.12143	No
SLV 16	-6546	-8431	74	0.075	754.9	0.965	1.13646	4.12143	No
SLV 6	-12218	-14814	-104	0.075	1332.6	0.979	1.11148	4.00899	No
SLV 5	-12218	-14814	-104	0.075	1332.6	0.979	1.11148	4.00899	No
SLV 10	-12126	-15010	-90	0.076	1323.2	0.979	1.12763	4.00899	No
SLV 9	-12126	-15010	-90	0.076	1323.2	0.979	1.12763	4.00899	No

Tabella dei coefficienti di sicurezza minimi

Stato limite	Coeff.s.	Comb.	Verifica
PF_SLU	23.698	SLU 41	Si
V_SLU	15.207	SLU 42	Si
PF_SLV	4.059	SLV 11	Si
V_SLV	1.139	SLV 11	Si
PFFP_SLV	17.091	SLV 11	Si
R_SLV	0.222	SLV 11	No

Maschio 148

Verifiche condotte secondo D.M. 17-01-18 (N.T.C.)

Dati geometrici

X ini.	Y ini.	X fin.	Y fin.	Quota i.	Quota.s	l	Sp.	h netta	h ini.	h fin.	a	a.s.,sx	a.s.,dx
-11.003	-4.784	-11.003	-3.509	Z medio 611 cm	L5	1.275	0.28	1.79	1.79	1.79			

Caratteristiche del materiale

(Circolare 7 21-01-19 C8.5.I) Muratura in mattoni pieni e malta di calce LC2_Corti

fb	fk	fvk0	fmedio	τ0	fv0	μ	ϕ	fv,lim	E	G	FC
600000			345000	9000	20000	0.58	0.77	32500	320000000	128000000	1.2

Verifica a pressoflessione nel piano secondo D.M. 17-01-18 NTC §7.8.2.2.1 in combinazioni non sismiche, γM = 3

Comb.	Quota	N	M	σ0	Mu	c.s.	Verifica
SLU 38	6.11	-9289	59.8	26019	4030.17	67.392	Si
SLU 38	7.9	-7724	139.04	21635	3616.12	26.007	Si
SLU 36	6.11	-9337	64.29	26155	4041.28	62.863	Si
SLU 36	7.9	-7771	145.96	21767	3630.16	24.87	Si
SLU 35	6.11	-9339	74.76	26160	4041.71	54.063	Si
SLU 35	7.9	-7780	148.08	21792	3632.83	24.534	Si
SLU 40	6.11	-9217	42.88	25818	4013.49	93.599	Si
SLU 40	7.9	-7606	140.97	21304	3580.5	25.399	Si
SLU 33	6.11	-9134	58.56	25585	3993.97	68.199	Si
SLU 33	7.9	-7566	138.67	21193	3568.35	25.733	Si
SLU 37	6.11	-9291	70.27	26025	4030.6	57.356	Si

Comb.	Quota	N	M	σ0	Mu	c.s.	Verifica
SLU 37	7.9	-7733	141.16	21660	3618.81	25.637	Si
SLU 32	6.11	-9136	69.04	25591	3994.42	57.86	Si
SLU 32	7.9	-7575	140.78	21218	3571.1	25.367	Si
SLU 39	6.11	-9219	53.35	25823	4013.94	75.235	Si
SLU 39	7.9	-7615	143.08	21329	3583.23	25.043	Si
SLU 42	6.11	-9420	48.6	26387	4060.06	83.535	Si
SLU 42	7.9	-7811	148.27	21879	3641.95	24.563	Si
SLU 41	6.11	-9422	59.08	26393	4060.48	68.733	Si
SLU 41	7.9	-7820	150.38	21904	3644.6	24.236	Si

Verifica a pressoflessione nel piano secondo D.M. 17-01-18 NTC §7.8.2.2.1 in combinazioni sismiche, γM = 2

Comb.	Quota	N	M	σ0	Mu	c.s.	Verifica
SLV 8	6.11	-3861	351.56	10815	2243.42	6.381	Si
SLV 8	7.9	-3972	35.04	11127	2301.68	65.69	Si
SLV 3	6.11	-6672	-302.64	18688	3602.68	11.904	Si
SLV 3	7.9	-6110	419.86	17114	3349.37	7.977	Si
SLV 7	6.11	-3861	351.56	10815	2243.42	6.381	Si
SLV 7	7.9	-3972	35.04	11127	2301.68	65.69	Si
SLV 4	6.11	-6672	-302.64	18688	3602.68	11.904	Si
SLV 4	7.9	-6110	419.86	17114	3349.37	7.977	Si
SLV 16	6.11	-6589	688.24	18456	3565.96	5.181	Si
SLV 16	7.9	-5136	-367.74	14386	2888.61	7.855	Si
SLV 11	6.11	-3836	648.83	10745	2230.38	3.438	Si
SLV 11	7.9	-3680	-201.24	10308	2148.11	10.674	Si
SLV 1	6.11	-9056	-566.12	25367	4574.71	8.081	Si
SLV 1	7.9	-7650	513.43	21427	4021.43	7.833	Si
SLV 15	6.11	-6589	688.24	18456	3565.96	5.181	Si
SLV 15	7.9	-5136	-367.74	14386	2888.61	7.855	Si
SLV 2	6.11	-9056	-566.12	25367	4574.71	8.081	Si
SLV 2	7.9	-7650	513.43	21427	4021.43	7.833	Si
SLV 12	6.11	-3836	648.83	10745	2230.38	3.438	Si
SLV 12	7.9	-3680	-201.24	10308	2148.11	10.674	Si

Verifica a taglio nel piano secondo D.M. 17-01-18 (N.T.C.) §7.8.2.2.2 con rottura per scorrimento in combinazioni non sismiche, γM = 3

Comb.	Quota	N	V par	M	σ0	σN	I'	fvd	Vt scorr.	Vt fess.diag.	Vt,lim	c.s.	Verifica
SLU 49	6.11	-9829	103	82.7		27533	1.275	9227	3294			32.03	Si
SLU 49	7.9	-8063	177	73.6		22585	1.275	8567	3058			17.23	Si
SLU 47	6.11	-9576	92	65.51		26824	1.275	9132	3260			35.35	Si
SLU 47	7.9	-7805	171	57.98		21862	1.275	8470	3024			17.69	Si
SLU 48	6.11	-9831	131	93.17		27538	1.275	9227	3294			25.17	Si
SLU 48	7.9	-8072	195	75.71		22610	1.275	8570	3060			15.72	Si
SLU 50	6.11	-9783	135	88.69		27402	1.275	9209	3288			24.36	Si
SLU 50	7.9	-8025	199	68.79		22478	1.275	8553	3053			15.33	Si
SLU 45	6.11	-9628	135	87.45		26968	1.275	9151	3267			24.23	Si
SLU 45	7.9	-7867	195	68.42		22036	1.275	8494	3032			15.54	Si
SLU 51	6.11	-9781	107	78.21		27397	1.275	9208	3287			30.74	Si
SLU 51	7.9	-8016	182	66.68		22453	1.275	8549	3052			16.78	Si
SLU 44	6.11	-9373	96	59.79		26254	1.275	9056	3233			33.61	Si
SLU 44	7.9	-7599	171	50.68		21287	1.275	8394	2997			17.48	Si
SLU 46	6.11	-9626	107	76.98		26963	1.275	9151	3267			30.58	Si
SLU 46	7.9	-7858	178	66.3		22010	1.275	8490	3031			17.03	Si
SLU 64	6.11	-10080	96	86.88		28237	1.275	9320	3327			34.73	Si
SLU 64	7.9	-8235	160	90.86		23066	1.275	8631	3081			19.28	Si
SLU 43	6.11	-9376	143	77.24		26263	1.275	9057	3233			22.62	Si
SLU 43	7.9	-7614	200	54.2		21329	1.275	8399	2999			14.99	Si

Verifica a taglio nel piano secondo D.M. 17-01-18 (N.T.C.) §7.8.2.2.2 con rottura per scorrimento in combinazioni sismiche, γM = 2

Comb.	Quota	N	V par	M	σ0	σN	I'	fvd	Vt scorr.	Vt fess.diag.	Vt,lim	c.s.	Verifica
SLV 12	6.11	-3836	3166	648.83		10745	1.275	10482	3742			1.18	Si
SLV 12	7.9	-3680	2995	-201.24		10308	1.275	10395	3711			1.24	Si
SLV 5	6.11	-11809	-3044	-526.7		33079	1.275	14949	5337			1.75	Si
SLV 5	7.9	-9105	-2769	346.93		25505	1.275	13434	4796			1.73	Si
SLV 11	6.11	-3836	3166	648.83		10745	1.275	10482	3742			1.18	Si
SLV 11	7.9	-3680	2995	-201.24		10308	1.275	10395	3711			1.24	Si
SLV 8	6.11	-3861	1732	351.56		10815	1.275	10496	3747			2.16	Si
SLV 8	7.9	-3972	1648	35.04		11127	1.275	10559	3769			2.29	Si
SLV 16	6.11	-6589	3167	688.24		18456	1.275	12025	4293			1.36	Si
SLV 16	7.9	-5136	3021	-367.74		14386	1.275	11211	4002			1.32	Si
SLV 7	6.11	-3861	1732	351.56		10815	1.275	10496	3747			2.16	Si
SLV 7	7.9	-3972	1648	35.04		11127	1.275	10559	3769			2.29	Si
SLV 2	6.11	-9056	-3045	-566.12		25367	1.275	13407	4786			1.57	Si
SLV 2	7.9	-7650	-2795	513.43		21427	1.275	12619	4505			1.61	Si
SLV 1	6.11	-9056	-3045	-566.12		25367	1.275	13407	4786			1.57	Si
SLV 1	7.9	-7650	-2795	513.43		21427	1.275	12619	4505			1.61	Si
SLV 6	6.11	-11809	-3044	-526.7		33079	1.275	14949	5337			1.75	Si
SLV 6	7.9	-9105	-2769	346.93		25505	1.275	13434	4796			1.73	Si
SLV 15	6.11	-6589	3167	688.24		18456	1.275	12025	4293			1.36	Si
SLV 15	7.9	-5136	3021	-367.74		14386	1.275	11211	4002			1.32	Si

Verifica a pressoflessione fuori piano D.M. 17-01-18 (N.T.C.)

quota 7.005 Wa 0.05 denominatore 8 γM = 2

Comb.	fd	Sa	σ0	N	M	Mc	Coeff.s.	Verifica
SLV 7	143750	0.39	11052	-3945	35.44	502.4	14.18	Si
SLV 8	143750	0.39	11052	-3945	35.44	502.4	14.18	Si
SLV 12	143750	0.39	11053	-3946	35.44	502.44	14.18	Si
SLV 11	143750	0.39	11053	-3946	35.44	502.44	14.18	Si
SLV 4	143750	0.39	17445	-6228	35.44	747.42	21.09	Si
SLV 3	143750	0.39	17445	-6228	35.44	747.42	21.09	Si
SLV 15	143750	0.39	17449	-6229	35.44	747.55	21.09	Si
SLV 16	143750	0.39	17449	-6229	35.44	747.55	21.09	Si

Comb.	fd	Sa	σ0	N	M	Mc	Coeff.s.	Verifica
SLV 2	143750	0.39	22926	-8185	35.44	930.86	26.26	Si
SLV 1	143750	0.39	22926	-8185	35.44	930.86	26.26	Si

Verifica dei meccanismi locali di collasso con analisi cinematica lineare

forza di aggancio al piano = 0 quota mezzeria = 7.005 Wa = 0.05 Ta = 0.0191

Comb.	N top	N base	V orto	α0	M*	e*	a0*	aLim	Verifica
SLV 1	-7650	-9056	0	0.084	868.8	0.969	1.25554	4.49335	No
SLV 2	-7650	-9056	0	0.084	868.8	0.969	1.25554	4.49335	No
SLV 6	-9105	-11809	6	0.082	1017	0.973	1.22874	4.36623	No
SLV 5	-9105	-11809	6	0.082	1017	0.973	1.22874	4.36623	No
SLV 9	-8813	-11784	7	0.082	987.3	0.972	1.23048	4.36623	No
SLV 10	-8813	-11784	7	0.082	987.3	0.972	1.23048	4.36623	No
SLV 13	-6676	-8973	2	0.084	769.7	0.965	1.26702	4.49335	No
SLV 14	-6676	-8973	2	0.084	769.7	0.965	1.26702	4.49335	No
SLV 3	-6110	-6672	-5	0.084	712.1	0.962	1.27272	4.49335	No
SLV 4	-6110	-6672	-5	0.084	712.1	0.962	1.27272	4.49335	No

Tabella dei coefficienti di sicurezza minimi

Stato limite	Coeff.s.	Comb.	Verifica
PF_SLU	24.236	SLU 41	Si
V_SLU	14.987	SLU 43	Si
PF_SLV	3.438	SLV 11	Si
V_SLV	1.182	SLV 11	Si
PFFP_SLV	14.175	SLV 7	Si
R_SLV	0.279	SLV 1	No

Maschio 149

Verifiche condotte secondo D.M. 17-01-18 (N.T.C.)

Dati geometrici

X ini.	Y ini.	X fin.	Y fin.	Quota i.	Quota.s	l	Sp.	h netta	h ini.	h fin.	a	a.s.,sx	a.s.,dx
-11.003	-3.509	-11.003	-3.314	L4	L5	0.195	0.28	3.55	3.55	3.55			

Caratteristiche del materiale

(Circolare 7 21-01-19 C8.5.I) Muratura in mattoni pieni e malta di calce LC2_Corti

fb	fk	fvk0	fmedio	τ0	fv0	μ	ϕ	fv,lim	E	G	FC
600000			345000	9000	20000	0.58	0.77	32500	320000000	128000000	1.2

Verifica a pressoflessione nel piano secondo D.M. 17-01-18 NTC §7.8.2.2.1 in combinazioni non sismiche, γM = 3

Comb.	Quota	N	M	σ0	Mu	c.s.	Verifica
SLU 58	4.35	-1016	-83.91	18613	76.45	0.911	No, M>Mu
SLU 58	7.9	-731	-89.11	0	0	0	No, e>l/2
SLU 60	4.35	-1016	-81.96	18607	76.43	0.933	No, M>Mu
SLU 60	7.9	-723	-90.16	0	0	0	No, e>l/2
SLU 1	4.35	-710	-59.69	12999	58.16	0.974	No, M>Mu
SLU 1	7.9	-498	-59.68	0	0	0	No, e>l/2
SLU 57	4.35	-1026	-84.85	18787	76.95	0.907	No, M>Mu
SLU 57	7.9	-734	-89.23	0	0	0	No, e>l/2
SLU 56	4.35	-1022	-84.47	18723	76.76	0.909	No, M>Mu
SLU 56	7.9	-737	-89.7	0	0	0	No, e>l/2
SLU 55	4.35	-1004	-82.74	18392	75.8	0.916	No, M>Mu
SLU 55	7.9	-708	-86.44	0	0	0	No, e>l/2
SLU 61	4.35	-1019	-82.34	18671	76.61	0.93	No, M>Mu
SLU 61	7.9	-720	-89.69	0	0	0	No, e>l/2
SLU 54	4.35	-1008	-83.04	18460	76	0.915	No, M>Mu
SLU 54	7.9	-715	-87.35	0	0	0	No, e>l/2
SLU 53	4.35	-1004	-82.66	18396	75.81	0.917	No, M>Mu
SLU 53	7.9	-718	-87.82	0	0	0	No, e>l/2
SLU 59	4.35	-1020	-84.29	18677	76.63	0.909	No, M>Mu
SLU 59	7.9	-728	-88.64	0	0	0	No, e>l/2

Verifica a pressoflessione nel piano secondo D.M. 17-01-18 NTC §7.8.2.2.1 in combinazioni sismiche, γM = 2

Comb.	Quota	N	M	σ0	Mu	c.s.	Verifica
SLV 5	4.35	-1031	-176.44	0	0	0	No, e>l/2
SLV 5	7.9	-692	-7.91	12669	60.45	7.644	Si
SLV 2	4.35	-909	-74.48	16644	76.54	1.028	Si
SLV 2	7.9	-662	-73.99	0	0	0	No, e>l/2
SLV 8	4.35	-524	67.2	0	0	0	No, e>l/2
SLV 8	7.9	-432	-140.53	0	0	0	No, e>l/2
SLV 6	4.35	-1031	-176.44	0	0	0	No, e>l/2
SLV 6	7.9	-692	-7.91	12669	60.45	7.644	Si
SLV 10	4.35	-984	-190.74	0	0	0	No, e>l/2
SLV 10	7.9	-639	8.95	11711	56.37	6.299	Si
SLV 4	4.35	-757	-1.39	13857	65.4	47.048	Si
SLV 4	7.9	-584	-113.78	0	0	0	No, e>l/2
SLV 7	4.35	-524	67.2	0	0	0	No, e>l/2
SLV 7	7.9	-432	-140.53	0	0	0	No, e>l/2
SLV 1	4.35	-909	-74.48	16644	76.54	1.028	Si
SLV 1	7.9	-662	-73.99	0	0	0	No, e>l/2
SLV 9	4.35	-984	-190.74	0	0	0	No, e>l/2
SLV 9	7.9	-639	8.95	11711	56.37	6.299	Si
SLV 3	4.35	-757	-1.39	13857	65.4	47.048	Si
SLV 3	7.9	-584	-113.78	0	0	0	No, e>l/2

Verifica a taglio nel piano secondo D.M. 17-01-18 (N.T.C.) §7.8.2.2.2 con rottura per scorrimento in combinazioni non sismiche, γM = 3

Comb.	Quota	N	V par	M	σ0	σN	l'	fvd	Vt scorr.	Vt fess.diag.	Vt,lim	c.s.	Verifica
SLU 53	4.35	-1004	11	-82.66		78669	0.0456	10833	138			12.93	Si
SLU 53	7.9	-718	29	-87.82		0	0	5556	0			0	No, Vu<V
SLU 59	4.35	-1020	9	-84.29		81775	0.0445	10833	135			14.73	Si
SLU 59	7.9	-728	28	-88.64		0	0	5556	0			0	No, Vu<V
SLU 1	4.35	-710	6	-59.69		63069	0.0402	10833	122			20.77	Si
SLU 1	7.9	-498	18	-59.68		0	0	5556	0			0	No, Vu<V
SLU 55	4.35	-1004	9	-82.74		79127	0.0453	10833	137			15.72	Si
SLU 55	7.9	-708	28	-86.44		0	0	5556	0			0	No, Vu<V
SLU 56	4.35	-1022	10	-84.47		81820	0.0446	10833	135			13.19	Si
SLU 56	7.9	-737	29	-89.7		0	0	5556	0			0	No, Vu<V
SLU 57	4.35	-1026	9	-84.85		82606	0.0443	10833	135			14.98	Si
SLU 57	7.9	-734	28	-89.23		0	0	5556	0			0	No, Vu<V
SLU 54	4.35	-1008	9	-83.04		79433	0.0453	10833	137			14.61	Si
SLU 54	7.9	-715	28	-87.35		0	0	5556	0			0	No, Vu<V
SLU 58	4.35	-1016	10	-83.91		80993	0.0448	10833	136			13	Si
SLU 58	7.9	-731	29	-89.11		0	0	5556	0			0	No, Vu<V
SLU 60	4.35	-1016	13	-81.96		71869	0.0505	10833	153			11.35	Si
SLU 60	7.9	-723	32	-90.16		0	0	5556	0			0	No, Vu<V
SLU 61	4.35	-1019	12	-82.34		72541	0.0502	10833	152			12.47	Si
SLU 61	7.9	-720	31	-89.69		0	0	5556	0			0	No, Vu<V

Verifica a taglio nel piano secondo D.M. 17-01-18 (N.T.C.) §7.8.2.2.2 con rottura per scorrimento in combinazioni sismiche, γM = 2

Comb.	Quota	N	V par	M	σ0	σN	l'	fvd	Vt scorr.	Vt fess.diag.	Vt,lim	c.s.	Verifica
SLV 1	4.35	-909	-240	-74.48		69623	0.0466	16250	212			0.88	No, Vu<V
SLV 1	7.9	-662	-127	-73.99		0	0	8333	0			0	No, Vu<V
SLV 4	4.35	-757	-67	-1.39		13857	0.195	11105	606			9.01	Si
SLV 4	7.9	-584	-2	-113.78		0	0	8333	0			0	No, Vu<V
SLV 10	4.35	-984	-231	-190.74		0	0	8333	0			0	No, Vu<V
SLV 10	7.9	-639	-160	8.95		11711	0.195	10676	583			3.64	Si
SLV 2	4.35	-909	-240	-74.48		69623	0.0466	16250	212			0.88	No, Vu<V
SLV 2	7.9	-662	-127	-73.99		0	0	8333	0			0	No, Vu<V
SLV 5	4.35	-1031	-328	-176.44		0	0	8333	0			0	No, Vu<V
SLV 5	7.9	-692	-212	-7.91		12669	0.195	10867	593			2.8	Si
SLV 8	4.35	-524	248	67.2		0	0	8333	0			0	No, Vu<V
SLV 8	7.9	-432	204	-140.53		0	0	8333	0			0	No, Vu<V
SLV 7	4.35	-524	248	67.2		0	0	8333	0			0	No, Vu<V
SLV 7	7.9	-432	204	-140.53		0	0	8333	0			0	No, Vu<V
SLV 3	4.35	-757	-67	-1.39		13857	0.195	11105	606			9.01	Si
SLV 3	7.9	-584	-2	-113.78		0	0	8333	0			0	No, Vu<V
SLV 9	4.35	-984	-231	-190.74		0	0	8333	0			0	No, Vu<V
SLV 9	7.9	-639	-160	8.95		11711	0.195	10676	583			3.64	Si
SLV 6	4.35	-1031	-328	-176.44		0	0	8333	0			0	No, Vu<V
SLV 6	7.9	-692	-212	-7.91		12669	0.195	10867	593			2.8	Si

Verifica a pressoflessione fuori piano D.M. 17-01-18 (N.T.C.)

quota 6.125 Wa 0.05 denominatore 8 γM = 2

Comb.	fd	Sa	σ0	N	M	Mc	Coeff.s.	Verifica
SLV 7	143750	0.38	9087	-496	20.3	64.3	3.17	Si
SLV 8	143750	0.38	9087	-496	20.3	64.3	3.17	Si
SLV 11	143750	0.38	11595	-633	20.3	80.22	3.95	Si
SLV 12	143750	0.38	11595	-633	20.3	80.22	3.95	Si
SLV 3	143750	0.38	14411	-787	20.3	97.17	4.79	Si
SLV 4	143750	0.38	14411	-787	20.3	97.17	4.79	Si
SLV 2	143750	0.38	21482	-1173	20.3	135.34	6.67	Si
SLV 1	143750	0.38	21482	-1173	20.3	135.34	6.67	Si
SLV 15	143750	0.38	22770	-1243	20.3	141.62	6.98	Si
SLV 16	143750	0.38	22770	-1243	20.3	141.62	6.98	Si

Verifica dei meccanismi locali di collasso con analisi cinematica lineare

forza di aggancio al piano = 0 quota mezzeria = 6.125 Wa = 0.05 Ta = 0.0752

Comb.	N top	N base	V orto	α0	M*	e*	a0*	aLim	Verifica
SLV 12	-380	-477	-36	0	67	0.903	0	9.97238	No
SLV 11	-380	-477	-36	0	67	0.903	0	9.97238	No
SLV 15	-410	-599	-36	0	70	0.905	0	11.26714	No
SLV 16	-410	-599	-36	0	70	0.905	0	11.26714	No
SLV 1	-662	-909	36	0.005	95.2	0.924	0.07874	11.26714	No
SLV 2	-662	-909	36	0.005	95.2	0.924	0.07874	11.26714	No
SLV 6	-692	-1031	36	0.006	98.2	0.926	0.09532	9.97238	No
SLV 5	-692	-1031	36	0.006	98.2	0.926	0.09532	9.97238	No
SLV 14	-487	-751	-19	0.021	77.7	0.912	0.32813	11.26714	No
SLV 13	-487	-751	-19	0.021	77.7	0.912	0.32813	11.26714	No

Tabella dei coefficienti di sicurezza minimi

Stato limite	Coeff.s.	Comb.	Verifica
PF_SLU	0	SLU 1	No
V_SLU	0	SLU 1	No
PF_SLV	0	SLV 1	No
V_SLV	0	SLV 1	No
PFFP_SLV	3.167	SLV 7	Si
R_SLV	0	SLV 11	No

Maschio 150

Verifiche condotte secondo D.M. 17-01-18 (N.T.C.)

Dati geometrici

X ini.	Y ini.	X fin.	Y fin.	Quota i.	Quota.s	l	Sp.	h netta	h ini.	h fin.	a	a.s.,sx	a.s.,dx
-11.003	-3.314	-11.003	-0.354	L4	Z medio 700 cm	2.96	0.28	2.655	1.76	3.55			

Caratteristiche del materiale

(Circolare 7 21-01-19 C8.5.I) Muratura in mattoni pieni e malta di calce LC2_Corti

fb	fk	fvk0	fmedio	τ0	fv0	μ	ϕ	fv,lim	E	G	FC
600000			345000	9000	20000	0.58	0.77	32500	320000000	128000000	1.2

Verifica a pressoflessione nel piano secondo D.M. 17-01-18 NTC §7.8.2.2.1 in combinazioni non sismiche, γM = 3

Comb.	Quota	N	M	σ0	Mu	c.s.	Verifica
SLU 80	4.35	-40804	2565.75	49232	23890.88	9.311	Si
SLU 80	6.11	-31060	1915.04	37476	24820.26	12.961	Si
SLU 79	4.35	-40876	2651.25	49320	23868.31	9.003	Si
SLU 79	6.11	-31160	1943.04	37597	24831.88	12.78	Si
SLU 84	4.35	-41557	2541.2	50141	23645.72	9.305	Si
SLU 84	6.11	-31570	1935.02	38091	24874.83	12.855	Si
SLU 69	4.35	-37631	2522.13	45404	24650.49	9.774	Si
SLU 69	6.11	-28642	1762.74	34559	24406.27	13.846	Si
SLU 78	4.35	-41151	2653.23	49652	23780.78	8.963	Si
SLU 78	6.11	-31362	1974.02	37840	24853.95	12.591	Si
SLU 83	4.35	-41629	2626.69	50229	23620.75	8.993	Si
SLU 83	6.11	-31670	1963.02	38212	24884.21	12.676	Si
SLU 74	4.35	-40437	2621.35	48790	24001.09	9.156	Si
SLU 74	6.11	-30763	1919.46	37118	24783.26	12.912	Si
SLU 77	4.35	-41224	2738.72	49739	23757.09	8.675	Si
SLU 77	6.11	-31462	2002.02	37961	24864.25	12.42	Si
SLU 75	4.35	-40365	2535.85	48703	24022.27	9.473	Si
SLU 75	6.11	-30663	1891.46	36997	24769.89	13.096	Si
SLU 81	4.35	-40843	2509.32	49279	23878.73	9.516	Si
SLU 81	6.11	-30971	1880.46	37369	24809.59	13.193	Si

Verifica a pressoflessione nel piano secondo D.M. 17-01-18 NTC §7.8.2.2.1 in combinazioni sismiche, γM = 2

Comb.	Quota	N	M	σ0	Mu	c.s.	Verifica
SLV 8	4.35	-27246	8249.02	32874	29475.19	3.573	Si
SLV 8	6.11	-19845	2108.69	23945	23615.31	11.199	Si
SLV 13	4.35	-22007	-3612.32	26553	25492.41	7.057	Si
SLV 13	6.11	-18467	-235.08	22282	22347.35	95.062	Si
SLV 4	4.35	-33482	6900	40398	33169.64	4.807	Si
SLV 4	6.11	-23436	2602.91	28277	26658.52	10.242	Si
SLV 11	4.35	-23365	6089.94	28191	26601.61	4.368	Si
SLV 11	6.11	-17988	1356.01	21704	21893.71	16.146	Si
SLV 14	4.35	-22007	-3612.32	26553	25492.41	7.057	Si
SLV 14	6.11	-18467	-235.08	22282	22347.35	95.062	Si
SLV 12	4.35	-23365	6089.94	28191	26601.61	4.368	Si
SLV 12	6.11	-17988	1356.01	21704	21893.71	16.146	Si
SLV 3	4.35	-33482	6900	40398	33169.64	4.807	Si
SLV 3	6.11	-23436	2602.91	28277	26658.52	10.242	Si
SLV 7	4.35	-27246	8249.02	32874	29475.19	3.573	Si
SLV 7	6.11	-19845	2108.69	23945	23615.31	11.199	Si
SLV 10	4.35	-28243	-4961.35	34077	30141.76	6.075	Si
SLV 10	6.11	-22058	259.14	26615	25535.2	98.539	Si
SLV 9	4.35	-28243	-4961.35	34077	30141.76	6.075	Si
SLV 9	6.11	-22058	259.14	26615	25535.2	98.539	Si

Verifica a taglio nel piano secondo D.M. 17-01-18 (N.T.C.) §7.8.2.2.2 con rottura per scorrimento in combinazioni non sismiche, γM = 3

Comb.	Quota	N	V par	M	σ0	σN	l'	fvd	Vt scorr.	Vt fess.diag.	Vt,lim	c.s.	Verifica
SLU 81	4.35	-40843	524	2509.32		49279	2.96	10833	8979			17.15	Si
SLU 81	6.11	-30971	751	1880.46		37369	2.96	10538	8734			11.63	Si
SLU 83	4.35	-41629	524	2626.69		50229	2.96	10833	8979			17.13	Si
SLU 83	6.11	-31670	754	1963.02		38212	2.96	10651	8827			11.71	Si
SLU 84	4.35	-41557	530	2541.2		50141	2.96	10833	8979			16.94	Si
SLU 84	6.11	-31570	769	1935.02		38091	2.96	10634	8814			11.46	Si
SLU 42	4.35	-35006	542	2281.66		42238	2.96	10833	8979			16.56	Si
SLU 42	6.11	-26656	764	1732.98		32162	2.96	9844	8159			10.68	Si
SLU 82	4.35	-40770	530	2423.83		49192	2.96	10833	8979			16.95	Si
SLU 82	6.11	-30871	766	1852.46		37248	2.96	10522	8721			11.39	Si
SLU 31	4.35	-32631	484	2014.46		39372	2.96	10805	8955			18.51	Si
SLU 31	6.11	-24681	678	1529.2		29780	2.96	9526	7895			11.65	Si
SLU 34	4.35	-33418	484	2131.83		40321	2.96	10833	8979			18.54	Si
SLU 34	6.11	-25380	681	1611.77		30623	2.96	9639	7988			11.73	Si
SLU 40	4.35	-34220	542	2164.28		41288	2.96	10833	8979			16.57	Si
SLU 40	6.11	-25957	761	1650.42		31319	2.96	9731	8065			10.6	Si
SLU 41	4.35	-35079	536	2367.15		42325	2.96	10833	8979			16.74	Si
SLU 41	6.11	-26756	749	1760.98		32283	2.96	9860	8172			10.9	Si
SLU 39	4.35	-34292	536	2249.77		41376	2.96	10833	8979			16.76	Si
SLU 39	6.11	-26057	746	1678.42		31439	2.96	9747	8079			10.83	Si

Verifica a taglio nel piano secondo D.M. 17-01-18 (N.T.C.) §7.8.2.2.2 con rottura per scorrimento in combinazioni sismiche, γM = 2

Comb.	Quota	N	V par	M	σ0	σN	l'	fvd	Vt scorr.	Vt fess.diag.	Vt,lim	c.s.	Verifica
SLV 14	4.35	-22007	-7144	-3612.32		26553	2.96	13644	11308			1.58	Si
SLV 14	6.11	-18467	-8040	-235.08		22282	2.96	12790	10600			1.32	Si
SLV 11	4.35	-23365	10425	6089.94		28191	2.96	13972	11580			1.11	Si
SLV 11	6.11	-17988	7947	1356.01		21704	2.96	12674	10504			1.32	Si
SLV 3	4.35	-33482	7639	6900		40398	2.96	16250	13468			1.76	Si
SLV 3	6.11	-23436	8756	2602.91		28277	2.96	13989	11594			1.32	Si
SLV 9	4.35	-28243	-12318	-4961.35		34077	2.96	15149	12555			1.02	Si
SLV 9	6.11	-22058	-10601	259.14		26615	2.96	13656	11318			1.07	Si
SLV 8	4.35	-27246	12813	8249.02		32874	2.96	14908	12356			0.96	No, Vu<V

Comb.	Quota	N	V par	M	σ0	σN	l'	fvd	Vt scorr.	Vt fess.diag.	Vt,lim	c.s.	Verifica
SLV 8	6.11	-19845	11317	2108.69		23945	2.96	13122	10876			0.96	No, Vu<V
SLV 7	4.35	-27246	12813	8249.02		32874	2.96	14908	12356			0.96	No, Vu<V
SLV 7	6.11	-19845	11317	2108.69		23945	2.96	13122	10876			0.96	No, Vu<V
SLV 10	4.35	-28243	-12318	-4961.35		34077	2.96	15149	12555			1.02	Si
SLV 10	6.11	-22058	-10601	259.14		26615	2.96	13656	11318			1.07	Si
SLV 4	4.35	-33482	7639	6900		40398	2.96	16250	13468			1.76	Si
SLV 4	6.11	-23436	8756	2602.91		28277	2.96	13989	11594			1.32	Si
SLV 13	4.35	-22007	-7144	-3612.32		26553	2.96	13644	11308			1.58	Si
SLV 13	6.11	-18467	-8040	-235.08		22282	2.96	12790	10600			1.32	Si
SLV 12	4.35	-23365	10425	6089.94		28191	2.96	13972	11580			1.11	Si
SLV 12	6.11	-17988	7947	1356.01		21704	2.96	12674	10504			1.32	Si

Verifica a pressoflessione fuori piano D.M. 17-01-18 (N.T.C.)

quota 5.23 Wa 0.05 denominatore 8 γM = 2

Comb.	fd	Sa	σ0	N	M	Mc	Coeff.s.	Verifica
SLV 15	143750	0.36	22805	-18901	163.57	2152.23	13.16	Si
SLV 16	143750	0.36	22805	-18901	163.57	2152.23	13.16	Si
SLV 14	143750	0.36	24717	-20485	163.57	2287.81	13.99	Si
SLV 13	143750	0.36	24717	-20485	163.57	2287.81	13.99	Si
SLV 12	143750	0.36	24756	-20518	163.57	2290.51	14	Si
SLV 11	143750	0.36	24756	-20518	163.57	2290.51	14	Si
SLV 7	143750	0.36	28341	-23489	163.57	2525.71	15.44	Si
SLV 8	143750	0.36	28341	-23489	163.57	2525.71	15.44	Si
SLV 10	143750	0.36	31130	-25801	163.57	2691.82	16.46	Si
SLV 9	143750	0.36	31130	-25801	163.57	2691.82	16.46	Si

Verifica dei meccanismi locali di collasso con analisi cinematica lineare

forza di aggancio al piano = 0 quota mezzeria = 5.23 Wa = 0.05 Ta = 0.042

Comb.	N top	N base	V orto	α0	M*	e*	a0*	aLim	Verifica
SLV 1	-24657	-34945	-78	0.054	2820.2	0.967	0.80766	6.08123	No
SLV 2	-24657	-34945	-78	0.054	2820.2	0.967	0.80766	6.08123	No
SLV 15	-17246	-20544	86	0.054	2066.3	0.956	0.81655	6.08123	No
SLV 16	-17246	-20544	86	0.054	2066.3	0.956	0.81655	6.08123	No
SLV 4	-23436	-33482	-20	0.056	2695.9	0.965	0.84377	6.08123	No
SLV 3	-23436	-33482	-20	0.056	2695.9	0.965	0.84377	6.08123	No
SLV 5	-23915	-32124	-108	0.053	2744.7	0.966	0.79119	5.67296	No
SLV 6	-23915	-32124	-108	0.053	2744.7	0.966	0.79119	5.67296	No
SLV 11	-17988	-23365	116	0.052	2141.8	0.957	0.79177	5.67296	No
SLV 12	-17988	-23365	116	0.052	2141.8	0.957	0.79177	5.67296	No

Tabella dei coefficienti di sicurezza minimi

Stato limite	Coeff.s.	Comb.	Verifica
PF_SLU	8.675	SLU 77	Si
V_SLU	10.599	SLU 40	Si
PF_SLV	3.573	SLV 7	Si
V_SLV	0.961	SLV 7	No
PFFP_SLV	13.158	SLV 15	Si
R_SLV	0.133	SLV 1	No

Maschio 152

Verifiche condotte secondo D.M. 17-01-18 (N.T.C.)

Dati geometrici

X ini.	Y ini.	X fin.	Y fin.	Quota i.	Quota.s	l	Sp.	h netta	h ini.	h fin.	a	a.s.,sx	a.s.,dx
-11.003	-0.354	-11.003	1.046	L4	L5	1.4	0.28	3.55	3.55	3.55			

Caratteristiche del materiale

(Circolare 7 21-01-19 C8.5.I) Muratura in mattoni pieni e malta di calce LC2_Corti

fb	fk	fvk0	fmedio	τ0	fv0	μ	ϕ	fv,lim	E	G	FC
600000			345000	9000	20000	0.58	0.77	32500	320000000	128000000	1.2

Verifica a pressoflessione nel piano secondo D.M. 17-01-18 NTC §7.8.2.2.1 in combinazioni non sismiche, γM = 3

Comb.	Quota	N	M	σ0	Mu	c.s.	Verifica
SLU 79	4.35	-18617	1625.38	47493	5433.95	3.343	Si
SLU 79	7.9	-15275	190.17	38968	5577.63	29.33	Si
SLU 82	4.35	-18474	1607.54	47128	5450.16	3.39	Si
SLU 82	7.9	-14901	144.43	38014	5563.24	38.518	Si
SLU 84	4.35	-18890	1650.15	48188	5400.66	3.273	Si
SLU 84	7.9	-15372	157.58	39214	5580.35	35.412	Si
SLU 80	4.35	-18501	1609.7	47197	5447.16	3.384	Si
SLU 80	7.9	-15191	184.09	38754	5574.93	30.283	Si
SLU 81	4.35	-18590	1623.23	47424	5437.08	3.35	Si
SLU 81	7.9	-14985	150.51	38228	5567.01	36.988	Si
SLU 75	4.35	-18314	1593.8	46719	5467.23	3.43	Si
SLU 75	7.9	-14954	180.79	38148	5565.64	30.784	Si
SLU 83	4.35	-19006	1665.83	48485	5385.46	3.233	Si
SLU 83	7.9	-15456	163.66	39429	5582.38	34.11	Si
SLU 78	4.35	-18729	1636.4	47779	5420.65	3.313	Si
SLU 78	7.9	-15425	193.94	39349	5581.66	28.78	Si
SLU 77	4.35	-18846	1652.09	48076	5406.27	3.272	Si
SLU 77	7.9	-15509	200.02	39563	5583.5	27.915	Si
SLU 74	4.35	-18430	1609.48	47015	5454.97	3.389	Si
SLU 74	7.9	-15038	186.87	38363	5569.21	29.803	Si

Verifica a pressoflessione nel piano secondo D.M. 17-01-18 NTC §7.8.2.2.1 in combinazioni sismiche, γM = 2

Comb.	Quota	N	M	σ0	Mu	c.s.	Verifica
SLV 4	4.35	-19377	2699.18	49430	8076.59	2.992	Si
SLV 4	7.9	-10450	173.22	26658	5719.06	33.017	Si
SLV 13	4.35	-5358	-589.2	13669	3331.19	5.654	Si
SLV 13	7.9	-9482	86.83	24189	5323.46	61.309	Si
SLV 11	4.35	-13401	2144.46	34186	6756.15	3.151	Si
SLV 11	7.9	-10809	-619.71	27574	5858.79	9.454	Si
SLV 12	4.35	-13401	2144.46	34186	6756.15	3.151	Si
SLV 12	7.9	-10809	-619.71	27574	5858.79	9.454	Si
SLV 3	4.35	-19377	2699.18	49430	8076.59	2.992	Si
SLV 3	7.9	-10450	173.22	26658	5719.06	33.017	Si
SLV 2	4.35	-17650	1827.96	45026	7802.3	4.268	Si
SLV 2	7.9	-9906	578.78	25270	5500.14	9.503	Si
SLV 1	4.35	-17650	1827.96	45026	7802.3	4.268	Si
SLV 1	7.9	-9906	578.78	25270	5500.14	9.503	Si
SLV 14	4.35	-5358	-589.2	13669	3331.19	5.654	Si
SLV 14	7.9	-9482	86.83	24189	5323.46	61.309	Si
SLV 7	4.35	-17089	2869.61	43593	7694.31	2.681	Si
SLV 7	7.9	-10936	-472.13	27898	5907.41	12.512	Si
SLV 8	4.35	-17089	2869.61	43593	7694.31	2.681	Si
SLV 8	7.9	-10936	-472.13	27898	5907.41	12.512	Si

Verifica a taglio nel piano secondo D.M. 17-01-18 (N.T.C.) §7.8.2.2.2 con rottura per scorrimento in combinazioni non sismiche, γM = 3

Comb.	Quota	N	V par	M	σ0	σN	I'	fvd	Vt scorr.	Vt fess.diag.	Vt,lim	c.s.	Verifica
SLU 81	4.35	-18590	-172	1623.23		47424	1.4	10833	4247			24.68	Si
SLU 81	7.9	-14985	-596	150.51		38228	1.4	10653	4176			7.01	Si
SLU 32	4.35	-15674	-146	1379.89		39985	1.4	10833	4247			29.03	Si
SLU 32	7.9	-12814	-528	166.84		32688	1.4	9914	3886			7.37	Si
SLU 84	4.35	-18890	-150	1650.15		48188	1.4	10833	4247			28.24	Si
SLU 84	7.9	-15372	-582	157.58		39214	1.4	10784	4227			7.26	Si
SLU 74	4.35	-18430	-133	1609.48		47015	1.4	10833	4247			31.94	Si
SLU 74	7.9	-15038	-563	186.87		38363	1.4	10671	4183			7.43	Si
SLU 41	4.35	-16250	-167	1436.24		41454	1.4	10833	4247			25.49	Si
SLU 41	7.9	-13231	-560	143.63		33754	1.4	10056	3942			7.04	Si
SLU 42	4.35	-16134	-164	1420.56		41158	1.4	10833	4247			25.94	Si
SLU 42	7.9	-13147	-547	137.55		33539	1.4	10027	3931			7.19	Si
SLU 39	4.35	-15835	-185	1393.64		40394	1.4	10833	4247			22.9	Si
SLU 39	7.9	-12761	-560	130.48		32553	1.4	9896	3879			6.93	Si
SLU 40	4.35	-15718	-182	1377.95		40098	1.4	10833	4247			23.27	Si
SLU 40	7.9	-12677	-547	124.4		32339	1.4	9867	3868			7.07	Si
SLU 83	4.35	-19006	-153	1665.83		48485	1.4	10833	4247			27.7	Si
SLU 83	7.9	-15456	-595	163.66		39429	1.4	10813	4239			7.12	Si
SLU 82	4.35	-18474	-169	1607.54		47128	1.4	10833	4247			25.1	Si
SLU 82	7.9	-14901	-583	144.43		38014	1.4	10624	4165			7.15	Si

Verifica a taglio nel piano secondo D.M. 17-01-18 (N.T.C.) §7.8.2.2.2 con rottura per scorrimento in combinazioni sismiche, γM = 2

Comb.	Quota	N	V par	M	σ0	σN	I'	fvd	Vt scorr.	Vt fess.diag.	Vt,lim	c.s.	Verifica
SLV 5	4.35	-11334	-4877	-34.48		28913	1.4	14116	5533			1.13	Si
SLV 5	7.9	-9123	-4360	879.76		23273	1.4	12988	5091			1.17	Si
SLV 2	4.35	-17650	-3737	1827.96		45026	1.4	16250	6370			1.7	Si
SLV 2	7.9	-9906	-2895	578.78		25270	1.4	13387	5248			1.81	Si
SLV 15	4.35	-7085	3567	282.03		18073	1.4	11948	4684			1.31	Si
SLV 15	7.9	-10026	2182	-318.74		25576	1.4	13449	5272			2.42	Si
SLV 11	4.35	-13401	4707	2144.46		34186	1.4	15171	5947			1.26	Si
SLV 11	7.9	-10809	3647	-619.71		27574	1.4	13848	5428			1.49	Si
SLV 6	4.35	-11334	-4877	-34.48		28913	1.4	14116	5533			1.13	Si
SLV 6	7.9	-9123	-4360	879.76		23273	1.4	12988	5091			1.17	Si
SLV 16	4.35	-7085	3567	282.03		18073	1.4	11948	4684			1.31	Si
SLV 16	7.9	-10026	2182	-318.74		25576	1.4	13449	5272			2.42	Si
SLV 10	4.35	-7646	-3417	-759.63		19506	1.4	12234	4796			1.4	Si
SLV 10	7.9	-8996	-3478	732.17		22949	1.4	12923	5066			1.46	Si
SLV 1	4.35	-17650	-3737	1827.96		45026	1.4	16250	6370			1.7	Si
SLV 1	7.9	-9906	-2895	578.78		25270	1.4	13387	5248			1.81	Si
SLV 9	4.35	-7646	-3417	-759.63		19506	1.4	12234	4796			1.4	Si
SLV 9	7.9	-8996	-3478	732.17		22949	1.4	12923	5066			1.46	Si
SLV 12	4.35	-13401	4707	2144.46		34186	1.4	15171	5947			1.26	Si
SLV 12	7.9	-10809	3647	-619.71		27574	1.4	13848	5428			1.49	Si

Verifica a pressoflessione fuori piano D.M. 17-01-18 (N.T.C.)

quota 6.125 Wa 0.05 denominatore 8 γM = 2

Comb.	fd	Sa	σ0	N	M	Mc	Coeff.s.	Verifica
SLV 14	143750	0.38	25120	-9847	145.76	1095.17	7.51	Si
SLV 13	143750	0.38	25120	-9847	145.76	1095.17	7.51	Si
SLV 10	143750	0.38	25947	-10171	145.76	1121.59	7.69	Si
SLV 9	143750	0.38	25947	-10171	145.76	1121.59	7.69	Si
SLV 16	143750	0.38	28225	-11064	145.76	1191.18	8.17	Si
SLV 15	143750	0.38	28225	-11064	145.76	1191.18	8.17	Si
SLV 5	143750	0.38	29761	-11666	145.76	1235.48	8.48	Si
SLV 6	143750	0.38	29761	-11666	145.76	1235.48	8.48	Si
SLV 11	143750	0.38	36298	-14229	145.76	1400.27	9.61	Si
SLV 12	143750	0.38	36298	-14229	145.76	1400.27	9.61	Si

Verifica dei meccanismi locali di collasso con analisi cinematica lineare

forza di aggancio al piano = 0 quota mezzeria = 6.125 Wa = 0.05 Ta = 0.0752

Comb.	N top	N base	V orto	α0	M*	e*	a0*	aLim	Verifica
SLV 13	-9482	-5358	-221	0.023	1162	0.951	0.35789	11.26714	No
SLV 14	-9482	-5358	-221	0.023	1162	0.951	0.35789	11.26714	No
SLV 9	-8996	-7646	-224	0.022	1112.7	0.949	0.34242	9.97238	No
SLV 10	-8996	-7646	-224	0.022	1112.7	0.949	0.34242	9.97238	No

Comb.	N top	N base	V orto	α0	M*	e*	a0*	aLim	Verifica
SLV 4	-10450	-19377	201	0.026	1260.3	0.954	0.40314	11.26714	No
SLV 3	-10450	-19377	201	0.026	1260.3	0.954	0.40314	11.26714	No
SLV 7	-10936	-17089	204	0.027	1309.7	0.956	0.40655	9.97238	No
SLV 8	-10936	-17089	204	0.027	1309.7	0.956	0.40655	9.97238	No
SLV 16	-10026	-7085	-122	0.033	1217.3	0.953	0.50346	11.26714	No
SLV 15	-10026	-7085	-122	0.033	1217.3	0.953	0.50346	11.26714	No

Tabella dei coefficienti di sicurezza minimi

Stato limite	Coeff.s.	Comb.	Verifica
PF_SLU	3.233	SLU 83	Si
V_SLU	6.928	SLU 39	Si
PF_SLV	2.681	SLV 7	Si
V_SLV	1.134	SLV 5	Si
PFFP_SLV	7.514	SLV 13	Si
R_SLV	0.032	SLV 13	No

Maschio 153

Verifiche condotte secondo D.M. 17-01-18 (N.T.C.)

Dati geometrici

X ini.	Y ini.	X fin.	Y fin.	Quota i.	Quota.s	l	Sp.	h netta	h ini.	h fin.	a	a.s.,sx	a.s.,dx
-9.746	2.215	-9.748	6.536	L4	L5	4.321	0.14	3.55	3.55	3.55			

Caratteristiche del materiale

(Circolare 7 21-01-19 C8.5.I) Muratura in mattoni pieni e malta di calce LC2_Corti

fb	fk	fvk0	fmedio	τ0	fv0	μ	ϕ	fv,lim	E	G	FC
600000			345000	9000	20000	0.58	0.77	32500	320000000	128000000	1.2

Verifica a pressoflessione nel piano secondo D.M. 17-01-18 NTC §7.8.2.2.1 in combinazioni non sismiche, γM = 3

Comb.	Quota	N	M	σ0	Mu	c.s.	Verifica
SLU 83	4.35	-31383	-3477.93	51878	24620.38	7.079	Si
SLU 83	7.9	-20713	-2000.57	34240	25939.25	12.966	Si
SLU 40	4.35	-26804	-3461.59	44310	26409.04	7.629	Si
SLU 40	7.9	-17742	-2202.79	29328	24529.42	11.136	Si
SLU 84	4.35	-31383	-3465.85	51879	24620.29	7.104	Si
SLU 84	7.9	-20713	-1993.83	34241	25939.38	13.01	Si
SLU 73	4.35	-29799	-3471.25	49260	25447.06	7.331	Si
SLU 73	7.9	-19582	-2065.52	32372	25494.08	12.343	Si
SLU 81	4.35	-31210	-3760.65	51594	24720.92	6.574	Si
SLU 81	7.9	-20557	-2302.28	33983	25884.54	11.243	Si
SLU 82	4.35	-31211	-3748.57	51594	24720.83	6.595	Si
SLU 82	7.9	-20557	-2295.54	33983	25884.68	11.276	Si
SLU 74	4.35	-30444	-3360.53	50326	25136.98	7.48	Si
SLU 74	7.9	-20154	-1884.56	33317	25733.2	13.655	Si
SLU 39	4.35	-26804	-3473.67	44310	26409.06	7.603	Si
SLU 39	7.9	-17741	-2209.54	29328	24529.19	11.102	Si
SLU 76	4.35	-29971	-3188.53	49545	25367.84	7.956	Si
SLU 76	7.9	-19738	-1763.81	32629	25562.11	14.493	Si
SLU 75	4.35	-30444	-3348.46	50327	25136.91	7.507	Si
SLU 75	7.9	-20154	-1877.82	33317	25733.35	13.704	Si

Verifica a pressoflessione nel piano secondo D.M. 17-01-18 NTC §7.8.2.2.1 in combinazioni sismiche, γM = 2

Comb.	Quota	N	M	σ0	Mu	c.s.	Verifica
SLV 6	4.35	-28644	-17868.66	47351	37902.15	2.121	Si
SLV 6	7.9	-16255	-5318.49	26872	27395.53	5.151	Si
SLV 10	4.35	-36217	-23031.07	59870	39906.12	1.733	Si
SLV 10	7.9	-21623	-9102.44	35745	33049.53	3.631	Si
SLV 11	4.35	-12494	13437.1	20654	22430.33	1.669	Si
SLV 11	7.9	-10623	2867.97	17560	19651.62	6.852	Si
SLV 8	4.35	-4921	18599.5	0	0	0	No, e>l/2
SLV 8	7.9	-5255	6651.92	8687	10545.64	1.585	Si
SLV 3	4.35	-4389	11858.45	0	0	0	No, e>l/2
SLV 3	7.9	-2842	6876.88	0	0	0	No, e>l/2
SLV 7	4.35	-4921	18599.5	0	0	0	No, e>l/2
SLV 7	7.9	-5255	6651.92	8687	10545.64	1.585	Si
SLV 4	4.35	-4389	11858.45	0	0	0	No, e>l/2
SLV 4	7.9	-2842	6876.88	0	0	0	No, e>l/2
SLV 12	4.35	-12494	13437.1	20654	22430.33	1.669	Si
SLV 12	7.9	-10623	2867.97	17560	19651.62	6.852	Si
SLV 9	4.35	-36217	-23031.07	59870	39906.12	1.733	Si
SLV 9	7.9	-21623	-9102.44	35745	33049.53	3.631	Si
SLV 5	4.35	-28644	-17868.66	47351	37902.15	2.121	Si
SLV 5	7.9	-16255	-5318.49	26872	27395.53	5.151	Si

Verifica a taglio nel piano secondo D.M. 17-01-18 (N.T.C.) §7.8.2.2.2 con rottura per scorrimento in combinazioni non sismiche, γM = 3

Comb.	Quota	N	V par	M	σ0	σN	l'	fvd	Vt scorr.	Vt fess.diag.	Vt,lim	c.s.	Verifica
SLU 6	4.35	-19457	-54	-1406.77		32165	4.3209	9844	5955			111.05	Si
SLU 6	7.9	-12837	-50	-427.85		21220	4.3209	8385	5072			100.52	Si
SLU 71	4.35	-26849	-58	-2297.65		44383	4.3209	10833	6553			112.34	Si
SLU 71	7.9	-17618	-54	-947.11		29124	4.3209	9439	5710			105.59	Si
SLU 49	4.35	-23864	-58	-1681.68		39449	4.3209	10815	6543			111.85	Si
SLU 49	7.9	-15653	-55	-513.86		25876	4.3209	9006	5448			99.86	Si
SLU 7	4.35	-19457	-52	-1394.7		32165	4.3209	9844	5955			115.05	Si
SLU 7	7.9	-12837	-49	-421.11		21221	4.3209	8385	5072			104.44	Si
SLU 72	4.35	-26849	-56	-2285.58		44384	4.3209	10833	6553			116.05	Si
SLU 72	7.9	-17618	-52	-940.36		29124	4.3209	9439	5710			109.42	Si

Comb.	Quota	N	V par	M	σ0	σN	l'	fvd	Vt scorr.	Vt fess.diag.	Vt,lim	c.s.	Verifica
SLU 50	4.35	-23391	-64	-1541.88		38667	4.3209	10711	6479			100.53	Si
SLU 50	7.9	-15236	-61	-411.08		25187	4.3209	8914	5392			89	Si
SLU 48	4.35	-23864	-60	-1693.75		39449	4.3209	10815	6543			108.4	Si
SLU 48	7.9	-15652	-56	-520.6		25875	4.3209	9006	5448			96.51	Si
SLU 9	4.35	-18984	-56	-1242.83		31383	4.3209	9740	5892			105.48	Si
SLU 9	7.9	-12420	-53	-311.59		20532	4.3209	8293	5017			95.19	Si
SLU 51	4.35	-23391	-63	-1529.8		38667	4.3209	10711	6479			103.52	Si
SLU 51	7.9	-15236	-59	-404.34		25187	4.3209	8914	5392			91.88	Si
SLU 8	4.35	-18984	-58	-1254.9		31383	4.3209	9740	5892			102.08	Si
SLU 8	7.9	-12420	-55	-318.33		20532	4.3209	8293	5017			91.89	Si

Verifica a taglio nel piano secondo D.M. 17-01-18 (N.T.C.) §7.8.2.2.2 con rottura per scorrimento in combinazioni sismiche, γM = 2

Comb.	Quota	N	V par	M	σ0	σN	l'	fvd	Vt scorr.	Vt fess.diag.	Vt,lim	c.s.	Verifica
SLV 8	4.35	-4921	8811	18599.5		0	0	8333	0			0	No, Vu<V
SLV 8	7.9	-5255	8152	6651.92		13986	2.6837	11131	4182			0.51	No, Vu<V
SLV 6	4.35	-28644	-9608	-17868.66		47351	4.3209	16250	9830			1.02	Si
SLV 6	7.9	-16255	-8541	-5318.49		26872	4.3209	13708	8292			0.97	No, Vu<V
SLV 9	4.35	-36217	-8832	-23031.07		59870	4.3209	16250	9830			1.11	Si
SLV 9	7.9	-21623	-8167	-9102.44		35745	4.3209	15482	9366			1.15	Si
SLV 4	4.35	-4389	1459	11858.45		0	0	8333	0			0	No, Vu<V
SLV 4	7.9	-2842	1873	6876.88		0	0	8333	0			0	No, Vu<V
SLV 7	4.35	-4921	8811	18599.5		0	0	8333	0			0	No, Vu<V
SLV 7	7.9	-5255	8152	6651.92		13986	2.6837	11131	4182			0.51	No, Vu<V
SLV 11	4.35	-12494	9587	13437.1		27418	3.255	13817	6296			0.66	No, Vu<V
SLV 11	7.9	-10623	8527	2867.97		17560	4.3209	11845	7166			0.84	No, Vu<V
SLV 3	4.35	-4389	1459	11858.45		0	0	8333	0			0	No, Vu<V
SLV 3	7.9	-2842	1873	6876.88		0	0	8333	0			0	No, Vu<V
SLV 10	4.35	-36217	-8832	-23031.07		59870	4.3209	16250	9830			1.11	Si
SLV 10	7.9	-21623	-8167	-9102.44		35745	4.3209	15482	9366			1.15	Si
SLV 5	4.35	-28644	-9608	-17868.66		47351	4.3209	16250	9830			1.02	Si
SLV 5	7.9	-16255	-8541	-5318.49		26872	4.3209	13708	8292			0.97	No, Vu<V
SLV 12	4.35	-12494	9587	13437.1		27418	3.255	13817	6296			0.66	No, Vu<V
SLV 12	7.9	-10623	8527	2867.97		17560	4.3209	11845	7166			0.84	No, Vu<V

Verifica a pressoflessione fuori piano D.M. 17-01-18 (N.T.C.)

quota 6.125 Wa 0.03 denominatore 8 γM = 2

Comb.	fd	Sa	σ0	N	M	Mc	Coeff.s.	Verifica
SLV 3	143750	0.38	6973	-4218	235.15	278.42	1.18	Si
SLV 4	143750	0.38	6973	-4218	235.15	278.42	1.18	Si
SLV 8	143750	0.38	7447	-4505	235.15	296.11	1.26	Si
SLV 7	143750	0.38	7447	-4505	235.15	296.11	1.26	Si
SLV 2	143750	0.38	16326	-9876	235.15	598.95	2.55	Si
SLV 1	143750	0.38	16326	-9876	235.15	598.95	2.55	Si
SLV 11	143750	0.38	17205	-10408	235.15	625.97	2.66	Si
SLV 12	143750	0.38	17205	-10408	235.15	625.97	2.66	Si
SLV 5	143750	0.38	38623	-23364	235.15	1118.51	4.76	Si
SLV 6	143750	0.38	38623	-23364	235.15	1118.51	4.76	Si

Verifica dei meccanismi locali di collasso con analisi cinematica lineare

forza di aggancio al piano = 0 quota mezzeria = 6.125 Wa = 0.03 Ta = 0.1503

Comb.	N top	N base	V orto	α0	M*	e*	a0*	aLim	Verifica
SLV 14	-24036	-36749	-2	0.021	2749.5	0.967	0.31713	16.27364	No
SLV 13	-24036	-36749	-2	0.021	2749.5	0.967	0.31713	16.27364	No
SLV 9	-21623	-36217	4	0.021	2504	0.964	0.3192	16.27364	No
SLV 10	-21623	-36217	4	0.021	2504	0.964	0.3192	16.27364	No
SLV 16	-20736	-29633	-6	0.021	2413.6	0.962	0.31934	16.27364	No
SLV 15	-20736	-29633	-6	0.021	2413.6	0.962	0.31934	16.27364	No
SLV 6	-16255	-28644	6	0.021	1958.1	0.955	0.32693	16.27364	No
SLV 5	-16255	-28644	6	0.021	1958.1	0.955	0.32693	16.27364	No
SLV 11	-10623	-12494	-7	0.022	1386.6	0.939	0.34351	16.27364	No
SLV 12	-10623	-12494	-7	0.022	1386.6	0.939	0.34351	16.27364	No

Tabella dei coefficienti di sicurezza minimi

Stato limite	Coeff.s.	Comb.	Verifica
PF_SLU	6.574	SLU 81	Si
V_SLU	89.005	SLU 50	Si
PF_SLV	0	SLV 3	No
V_SLV	0	SLV 3	No
PFFP_SLV	1.184	SLV 3	Si
R_SLV	0.019	SLV 13	No

Maschio 154

Verifiche condotte secondo D.M. 17-01-18 (N.T.C.)

Dati geometrici

X ini.	Y ini.	X fin.	Y fin.	Quota i.	Quota.s	l	Sp.	h netta	h ini.	h fin.	a	a.s.,sx	a.s.,dx
-9.89	-4.784	-11.003	-4.784	L4	L5	1.113	0.3	3.55	3.55	3.55			

Caratteristiche del materiale

(Circolare 7 21-01-19 C8.5.I) Muratura in mattoni pieni e malta di calce LC2_Corti

fb	fk	fvk0	fmedio	τ0	fv0	μ	ϕ	fv,lim	E	G	FC
600000			345000	9000	20000	0.58	0.77	32500	320000000	128000000	1.2

Verifica a pressoflessione nel piano secondo D.M. 17-01-18 NTC §7.8.2.2.1 in combinazioni non sismiche, γM = 3

Comb.	Quota	N	M	σ0	Mu	c.s.	Verifica
SLU 83	4.35	-11162	313.96	33435	3661.2	11.661	Si
SLU 83	7.46	-9052	-241.06	27114	3359.84	13.938	Si
SLU 79	4.35	-11040	292.16	33069	3648.72	12.489	Si
SLU 79	7.46	-8918	-227.23	26714	3334.63	14.675	Si
SLU 40	4.35	-8949	271.01	26807	3340.57	12.326	Si
SLU 40	7.46	-7354	-207.1	22029	2985.14	14.414	Si
SLU 81	4.35	-11002	312.54	32957	3644.77	11.662	Si
SLU 81	7.46	-8892	-239.77	26638	3329.72	13.887	Si
SLU 77	4.35	-11066	290.52	33149	3651.49	12.569	Si
SLU 77	7.46	-8938	-227.54	26774	3338.43	14.672	Si
SLU 82	4.35	-11010	301.5	32981	3645.62	12.092	Si
SLU 82	7.46	-8896	-236.91	26648	3330.37	14.058	Si
SLU 39	4.35	-8941	282.05	26783	3339.04	11.839	Si
SLU 39	7.46	-7351	-209.96	22019	2984.29	14.213	Si
SLU 41	4.35	-9101	283.47	27262	3368.93	11.884	Si
SLU 41	7.46	-7510	-211.25	22496	3024.45	14.317	Si
SLU 84	4.35	-11170	302.93	33459	3662	12.089	Si
SLU 84	7.46	-9055	-238.2	27124	3360.47	14.108	Si
SLU 42	4.35	-9109	272.44	27286	3370.41	12.371	Si
SLU 42	7.46	-7513	-208.39	22506	3025.29	14.518	Si

Verifica a pressoflessione nel piano secondo D.M. 17-01-18 NTC §7.8.2.2.1 in combinazioni sismiche, γM = 2

Comb.	Quota	N	M	σ0	Mu	c.s.	Verifica
SLV 4	4.35	-4861	1465.98	14562	2382.46	1.625	Si
SLV 4	7.46	-6821	-600.29	20431	3160.32	5.265	Si
SLV 2	4.35	-7934	1348.88	23768	3555.86	2.636	Si
SLV 2	7.46	-9039	-692.21	27076	3914.64	5.655	Si
SLV 14	4.35	-10763	-1094.42	32241	4408.28	4.028	Si
SLV 14	7.46	-5496	301.14	16462	2645.75	8.786	Si
SLV 3	4.35	-4861	1465.98	14562	2382.46	1.625	Si
SLV 3	7.46	-6821	-600.29	20431	3160.32	5.265	Si
SLV 1	4.35	-7934	1348.88	23768	3555.86	2.636	Si
SLV 1	7.46	-9039	-692.21	27076	3914.64	5.655	Si
SLV 16	4.35	-7690	-977.31	23036	3472.01	3.553	Si
SLV 16	7.46	-3277	393.07	9818	1677.03	4.267	Si
SLV 8	4.35	-2266	747.45	6789	1190.9	1.593	Si
SLV 8	7.46	-2993	-145.37	8964	1542.88	10.614	Si
SLV 15	4.35	-7690	-977.31	23036	3472.01	3.553	Si
SLV 15	7.46	-3277	393.07	9818	1677.03	4.267	Si
SLV 7	4.35	-2266	747.45	6789	1190.9	1.593	Si
SLV 7	7.46	-2993	-145.37	8964	1542.88	10.614	Si
SLV 13	4.35	-10763	-1094.42	32241	4408.28	4.028	Si
SLV 13	7.46	-5496	301.14	16462	2645.75	8.786	Si

Verifica a taglio nel piano secondo D.M. 17-01-18 (N.T.C.) §7.8.2.2.2 con rottura per scorrimento in combinazioni non sismiche, γM = 3

Comb.	Quota	N	V par	M	σ0	σN	I'	fvd	Vt scorr.	Vt fess.diag.	Vt,lim	c.s.	Verifica
SLU 37	4.35	-8979	288	261.68		26895	1.1128	9142	3052			10.58	Si
SLU 37	7.46	-7376	-115	-197.42		22096	1.1128	8502	2838			24.71	Si
SLU 82	4.35	-11010	315	301.5		32981	1.1128	9953	3323			10.55	Si
SLU 82	7.46	-8896	-142	-236.91		26648	1.1128	9109	3041			21.42	Si
SLU 83	4.35	-11162	335	313.96		33435	1.1128	10014	3343			9.99	Si
SLU 83	7.46	-9052	-146	-241.06		27114	1.1128	9171	3062			20.92	Si
SLU 84	4.35	-11170	321	302.93		33459	1.1128	10017	3344			10.43	Si
SLU 84	7.46	-9055	-147	-238.2		27124	1.1128	9172	3062			20.89	Si
SLU 42	4.35	-9109	293	272.44		27286	1.1128	9194	3069			10.46	Si
SLU 42	7.46	-7513	-109	-208.39		22506	1.1128	8556	2856			26.28	Si
SLU 81	4.35	-11002	329	312.54		32957	1.1128	9950	3322			10.1	Si
SLU 81	7.46	-8892	-142	-239.77		26638	1.1128	9107	3040			21.45	Si
SLU 39	4.35	-8941	302	282.05		26783	1.1128	9127	3047			10.1	Si
SLU 39	7.46	-7351	-104	-209.96		22019	1.1128	8491	2835			27.31	Si
SLU 41	4.35	-9101	307	283.47		27262	1.1128	9190	3068			9.98	Si
SLU 41	7.46	-7510	-108	-211.25		22496	1.1128	8555	2856			26.34	Si
SLU 79	4.35	-11040	316	292.16		33069	1.1128	9965	3327			10.54	Si
SLU 79	7.46	-8918	-153	-227.23		26714	1.1128	9117	3044			19.92	Si
SLU 40	4.35	-8949	288	271.01		26807	1.1128	9130	3048			10.59	Si
SLU 40	7.46	-7354	-104	-207.1		22029	1.1128	8493	2835			27.25	Si

Verifica a taglio nel piano secondo D.M. 17-01-18 (N.T.C.) §7.8.2.2.2 con rottura per scorrimento in combinazioni sismiche, γM = 2

Comb.	Quota	N	V par	M	σ0	σN	I'	fvd	Vt scorr.	Vt fess.diag.	Vt,lim	c.s.	Verifica
SLV 13	4.35	-10763	-3501	-1094.42		32241	1.1128	14782	4935			1.41	Si
SLV 13	7.46	-5496	-917	301.14		16462	1.1128	11626	3881			4.23	Si
SLV 2	4.35	-7934	4188	1348.88		23768	1.1128	13087	4369			1.04	Si
SLV 2	7.46	-9039	504	-692.21		27076	1.1128	13748	4590			9.12	Si
SLV 11	4.35	-3115	-1460	14.46		9331	1.1128	10200	3405			2.33	Si
SLV 11	7.46	-1930	-19	152.64		5780	1.1128	9489	3168			169.88	Si
SLV 12	4.35	-3115	-1460	14.46		9331	1.1128	10200	3405			2.33	Si
SLV 12	7.46	-1930	-19	152.64		5780	1.1128	9489	3168			169.88	Si
SLV 1	4.35	-7934	4188	1348.88		23768	1.1128	13087	4369			1.04	Si
SLV 1	7.46	-9039	504	-692.21		27076	1.1128	13748	4590			9.12	Si
SLV 15	4.35	-7690	-3801	-977.31		23036	1.1128	12940	4320			1.14	Si
SLV 15	7.46	-3277	-732	393.07		9818	1.1128	10297	3437			4.7	Si
SLV 14	4.35	-10763	-3501	-1094.42		32241	1.1128	14782	4935			1.41	Si
SLV 14	7.46	-5496	-917	301.14		16462	1.1128	11626	3881			4.23	Si
SLV 16	4.35	-7690	-3801	-977.31		23036	1.1128	12940	4320			1.14	Si
SLV 16	7.46	-3277	-732	393.07		9818	1.1128	10297	3437			4.7	Si
SLV 3	4.35	-4861	3888	1465.98		21197	0.7645	12573	2884			0.74	No, Vu<V
SLV 3	7.46	-6821	689	-600.29		20431	1.1128	12420	4146			6.02	Si
SLV 4	4.35	-4861	3888	1465.98		21197	0.7645	12573	2884			0.74	No, Vu<V
SLV 4	7.46	-6821	689	-600.29		20431	1.1128	12420	4146			6.02	Si

Verifica a pressoflessione fuori piano D.M. 17-01-18 (N.T.C.)

quota 6.125 Wa 0.05 denominatore 8 γM = 2

Comb.	fd	Sa	σ0	N	M	Mc	Coeff.s.	Verifica
SLV 12	143750	0.38	7156	-2389	118.49	337.33	2.85	Si
SLV 11	143750	0.38	7156	-2389	118.49	337.33	2.85	Si
SLV 16	143750	0.38	10525	-3514	118.49	481.65	4.07	Si
SLV 15	143750	0.38	10525	-3514	118.49	481.65	4.07	Si
SLV 7	143750	0.38	11710	-3909	118.49	530.17	4.47	Si
SLV 8	143750	0.38	11710	-3909	118.49	530.17	4.47	Si
SLV 13	143750	0.38	17968	-5998	118.49	767.42	6.48	Si
SLV 14	143750	0.38	17968	-5998	118.49	767.42	6.48	Si
SLV 4	143750	0.38	25706	-8581	118.49	1016.4	8.58	Si
SLV 3	143750	0.38	25706	-8581	118.49	1016.4	8.58	Si

Verifica dei meccanismi locali di collasso con analisi cinematica lineare

forza di aggancio al piano = 0 quota mezzeria = 6.125 Wa = 0.05 Ta = 0.0702

Comb.	N top	N base	V orto	α0	M*	e*	a0*	aLim	Verifica
SLV 1	-8729	-7934	48	0.042	1056	0.954	0.63952	10.36036	No
SLV 2	-8729	-7934	48	0.042	1056	0.954	0.63952	10.36036	No
SLV 15	-1692	-7690	-48	0.041	348.6	0.894	0.66802	10.36036	No
SLV 16	-1692	-7690	-48	0.041	348.6	0.894	0.66802	10.36036	No
SLV 3	-6843	-4861	31	0.044	864.6	0.945	0.67656	10.36036	No
SLV 4	-6843	-4861	31	0.044	864.6	0.945	0.67656	10.36036	No
SLV 14	-3578	-10763	-32	0.045	534.9	0.919	0.71371	10.36036	No
SLV 13	-3578	-10763	-32	0.045	534.9	0.919	0.71371	10.36036	No
SLV 6	-9127	-12510	39	0.043	1096.4	0.955	0.65153	9.21471	No
SLV 5	-9127	-12510	39	0.043	1096.4	0.955	0.65153	9.21471	No

Tabella dei coefficienti di sicurezza minimi

Stato limite	Coeff.s.	Comb.	Verifica
PF_SLU	11.661	SLU 83	Si
V_SLU	9.981	SLU 41	Si
PF_SLV	1.593	SLV 7	Si
V_SLV	0.742	SLV 3	No
PFFP_SLV	2.847	SLV 11	Si
R_SLV	0.062	SLV 1	No

Maschio 155

Verifiche condotte secondo D.M. 17-01-18 (N.T.C.)

Dati geometrici

X ini.	Y ini.	X fin.	Y fin.	Quota i.	Quota.s	l	Sp.	h netta	h ini.	h fin.	a	a.s.,sx	a.s.,dx
-7.723	-4.784	-8.05	-4.784	L4	L5	0.327	0.3	3.55	3.55	3.55			

Caratteristiche del materiale

(Circolare 7 21-01-19 C8.5.I) Muratura in mattoni pieni e malta di calce LC2_Corti

fb	fk	fvk0	fmedio	τ0	fv0	μ	ϕ	fv,lim	E	G	FC
600000			345000	9000	20000	0.58	0.77	32500	320000000	128000000	1.2

Verifica a pressoflessione nel piano secondo D.M. 17-01-18 NTC §7.8.2.2.1 in combinazioni non sismiche, γM = 3

Comb.	Quota	N	M	σ0	Mu	c.s.	Verifica
SLU 72	4.35	-3770	-26.84	38399	326.02	12.147	Si
SLU 72	7.46	-2292	-81.67	23343	267.49	3.275	Si
SLU 55	4.35	-3694	-30.33	37626	325.2	10.721	Si
SLU 55	7.46	-2340	-82.53	23835	270.82	3.281	Si
SLU 59	4.35	-3788	-30.56	38588	326.19	10.673	Si
SLU 59	7.46	-2317	-81.7	23606	269.28	3.296	Si
SLU 70	4.35	-3769	-27.88	38398	326.02	11.692	Si
SLU 70	7.46	-2286	-81.31	23291	267.13	3.285	Si
SLU 44	4.35	-3392	-18.29	34557	319.58	17.477	Si
SLU 44	7.46	-2110	-77.47	21492	254.12	3.28	Si
SLU 68	4.35	-3675	-26.61	37437	324.96	12.212	Si
SLU 68	7.46	-2314	-82.5	23571	269.05	3.261	Si
SLU 51	4.35	-3566	-17.45	36326	323.27	18.53	Si
SLU 51	7.46	-2139	-78.88	21792	256.39	3.251	Si
SLU 49	4.35	-3566	-18.49	36326	323.27	17.482	Si
SLU 49	7.46	-2134	-78.51	21740	255.99	3.261	Si
SLU 47	4.35	-3472	-17.22	35365	321.42	18.669	Si
SLU 47	7.46	-2162	-79.71	22021	258.08	3.238	Si
SLU 76	4.35	-3897	-39.73	39699	326.89	8.228	Si
SLU 76	7.46	-2492	-85.33	25385	280.67	3.289	Si

Verifica a pressoflessione nel piano secondo D.M. 17-01-18 NTC §7.8.2.2.1 in combinazioni sismiche, γM = 2

Comb.	Quota	N	M	σ0	Mu	c.s.	Verifica
SLV 15	4.35	-1083	-386.38	0	0	0	No, e>l/2
SLV 15	7.46	-2194	-120.97	22346	293.28	2.424	Si
SLV 11	4.35	-363	-91.45	0	0	0	No, e>l/2
SLV 11	7.46	-2441	-304.23	24869	318.15	1.046	Si
SLV 10	4.35	-4608	-184.41	46942	464.32	2.518	Si
SLV 10	7.46	-1006	198.44	0	0	0	No, e>l/2
SLV 16	4.35	-1083	-386.38	0	0	0	No, e>l/2
SLV 16	7.46	-2194	-120.97	22346	293.28	2.424	Si
SLV 12	4.35	-363	-91.45	0	0	0	No, e>l/2
SLV 12	7.46	-2441	-304.23	24869	318.15	1.046	Si
SLV 5	4.35	-5265	40.51	53627	483.31	11.932	Si
SLV 5	7.46	-788	192.16	0	0	0	No, e>l/2

Comb.	Quota	N	M	σ0	Mu	c.s.	Verifica
SLV 14	4.35	-2357	-414.27	0	0	0	No, e>l/2
SLV 14	7.46	-1763	29.83	17960	246.07	8.248	Si
SLV 6	4.35	-5265	40.51	53627	483.31	11.932	Si
SLV 6	7.46	-788	192.16	0	0	0	No, e>l/2
SLV 13	4.35	-2357	-414.27	0	0	0	No, e>l/2
SLV 13	7.46	-1763	29.83	17960	246.07	8.248	Si
SLV 9	4.35	-4608	-184.41	46942	464.32	2.518	Si
SLV 9	7.46	-1006	198.44	0	0	0	No, e>l/2

Verifica a taglio nel piano secondo D.M. 17-01-18 (N.T.C.) §7.8.2.2.2 con rottura per scorrimento in combinazioni non sismiche, γM = 3

Comb.	Quota	N	V par	M	σ0	σN	l'	fvd	Vt scorr.	Vt fess.diag.	Vt,lim	c.s.	Verifica
SLU 58	4.35	-3811	-27	-32.51		38818	0.3272	10731	1053			38.96	Si
SLU 58	7.46	-2206	-52	-77.1		22471	0.3272	8552	840			16.13	Si
SLU 66	4.35	-3713	-25	-30.9		37820	0.3272	10598	1040			42.38	Si
SLU 66	7.46	-2123	-51	-74.47		21627	0.3272	8439	828			16.13	Si
SLU 69	4.35	-3792	-23	-29.83		38628	0.3272	10706	1051			45.71	Si
SLU 69	7.46	-2175	-55	-76.7		22155	0.3272	8510	835			15.2	Si
SLU 71	4.35	-3792	-23	-28.79		38629	0.3272	10706	1051			46.54	Si
SLU 71	7.46	-2180	-56	-77.07		22208	0.3272	8517	836			14.9	Si
SLU 72	4.35	-3770	-32	-26.84		38399	0.3272	10675	1048			32.65	Si
SLU 72	7.46	-2292	-52	-81.67		23343	0.3272	8668	851			16.45	Si
SLU 77	4.35	-4014	-36	-42.95		40889	0.3272	10833	1063			29.76	Si
SLU 77	7.46	-2353	-54	-79.53		23969	0.3272	8751	859			15.85	Si
SLU 50	4.35	-3589	-14	-19.39		36557	0.3272	10430	1024			71.62	Si
SLU 50	7.46	-2028	-53	-74.27		20657	0.3272	8310	816			15.44	Si
SLU 79	4.35	-4014	-35	-41.9		40890	0.3272	10833	1063			30.1	Si
SLU 79	7.46	-2358	-55	-79.89		24022	0.3272	8758	860			15.54	Si
SLU 56	4.35	-3811	-27	-33.56		38817	0.3272	10731	1053			38.38	Si
SLU 56	7.46	-2201	-51	-76.73		22418	0.3272	8545	839			16.47	Si
SLU 48	4.35	-3589	-15	-20.44		36556	0.3272	10430	1024			69.62	Si
SLU 48	7.46	-2023	-52	-73.91		20604	0.3272	8303	815			15.76	Si

Verifica a taglio nel piano secondo D.M. 17-01-18 (N.T.C.) §7.8.2.2.2 con rottura per scorrimento in combinazioni sismiche, γM = 2

Comb.	Quota	N	V par	M	σ0	σN	l'	fvd	Vt scorr.	Vt fess.diag.	Vt,lim	c.s.	Verifica
SLV 14	4.35	-2357	-392	-414.27		0	0	8333	0			0	No, Vu<V
SLV 14	7.46	-1763	640	29.83		17960	0.3272	11925	1171			1.83	Si
SLV 6	4.35	-5265	329	40.51		53627	0.3272	16250	1595			4.85	Si
SLV 6	7.46	-788	-478	192.16		0	0	8333	0			0	No, Vu<V
SLV 5	4.35	-5265	329	40.51		53627	0.3272	16250	1595			4.85	Si
SLV 5	7.46	-788	-478	192.16		0	0	8333	0			0	No, Vu<V
SLV 10	4.35	-4608	67	-184.41		46942	0.3272	16250	1595			23.84	Si
SLV 10	7.46	-1006	-32	198.44		0	0	8333	0			0	No, Vu<V
SLV 16	4.35	-1083	-524	-386.38		0	0	8333	0			0	No, Vu<V
SLV 16	7.46	-2194	771	-120.97		22470	0.3254	12827	1252			1.62	Si
SLV 11	4.35	-363	-372	-91.45		0	0	8333	0			0	No, Vu<V
SLV 11	7.46	-2441	404	-304.23		69553	0.117	16250	570			1.41	Si
SLV 15	4.35	-1083	-524	-386.38		0	0	8333	0			0	No, Vu<V
SLV 15	7.46	-2194	771	-120.97		22470	0.3254	12827	1252			1.62	Si
SLV 9	4.35	-4608	67	-184.41		46942	0.3272	16250	1595			23.84	Si
SLV 9	7.46	-1006	-32	198.44		0	0	8333	0			0	No, Vu<V
SLV 13	4.35	-2357	-392	-414.27		0	0	8333	0			0	No, Vu<V
SLV 13	7.46	-1763	640	29.83		17960	0.3272	11925	1171			1.83	Si
SLV 12	4.35	-363	-372	-91.45		0	0	8333	0			0	No, Vu<V
SLV 12	7.46	-2441	404	-304.23		69553	0.117	16250	570			1.41	Si

Verifica a pressoflessione fuori piano D.M. 17-01-18 (N.T.C.)

quota 6.125 Wa 0.05 denominatore 8 γM = 2

Comb.	fd	Sa	σ0	N	M	Mc	Coeff.s.	Verifica
SLV 8	143750	0.38	3341	-328	34.84	47.85	1.37	Si
SLV 7	143750	0.38	3341	-328	34.84	47.85	1.37	Si
SLV 11	143750	0.38	6447	-633	34.84	89.92	2.58	Si
SLV 12	143750	0.38	6447	-633	34.84	89.92	2.58	Si
SLV 4	143750	0.38	14207	-1395	34.84	184.88	5.31	Si
SLV 3	143750	0.38	14207	-1395	34.84	184.88	5.31	Si
SLV 16	143750	0.38	24560	-2411	34.84	288.96	8.29	Si
SLV 15	143750	0.38	24560	-2411	34.84	288.96	8.29	Si
SLV 1	143750	0.38	26627	-2614	34.84	306.65	8.8	Si
SLV 2	143750	0.38	26627	-2614	34.84	306.65	8.8	Si

Verifica dei meccanismi locali di collasso con analisi cinematica lineare

forza di aggancio al piano = 0 quota mezzeria = 6.125 Wa = 0.05 Ta = 0.0702

Comb.	N top	N base	V orto	α0	M*	e*	a0*	aLim	Verifica
SLV 12	53	-363	-17	0	0	0	0	9.21471	No, Trazione
SLV 11	53	-363	-17	0	0	0	0	9.21471	No, Trazione
SLV 7	28	-1019	-14	0	0	0	0	9.21471	No, Trazione
SLV 8	28	-1019	-14	0	0	0	0	9.21471	No, Trazione
SLV 2	-2167	-4544	10	0.044	269.9	0.948	0.66897	10.36036	No
SLV 1	-2167	-4544	10	0.044	269.9	0.948	0.66897	10.36036	No
SLV 15	-1083	-1083	-10	0.044	160.3	0.92	0.69884	10.36036	No
SLV 16	-1083	-1083	-10	0.044	160.3	0.92	0.69884	10.36036	No
SLV 5	-3303	-5265	17	0.041	385.4	0.962	0.62413	9.21471	No
SLV 6	-3303	-5265	17	0.041	385.4	0.962	0.62413	9.21471	No

Tabella dei coefficienti di sicurezza minimi

Stato limite	Coeff.s.	Comb.	Verifica
PF_SLU	3.238	SLU 47	Si
V_SLU	14.902	SLU 71	Si
PF_SLV	0	SLV 5	No
V_SLV	0	SLV 5	No

Stato limite	Coeff.s.	Comb.	Verifica
PFFP_SLV	1.373	SLV 7	Si
R_SLV	0	SLV 12	No

Maschio 156

Verifiche condotte secondo D.M. 17-01-18 (N.T.C.)

Dati geometrici

X ini.	Y ini.	X fin.	Y fin.	Quota i.	Quota.s	l	Sp.	h netta	h ini.	h fin.	a	a.s.,sx	a.s.,dx
-9.454	-3.248	-11.003	-3.248	L4	L5	1.549	0.28	3.55	3.55	3.55			

Caratteristiche del materiale

(Circolare 7 21-01-19 C8.5.I) Muratura in mattoni pieni e malta di calce LC2_Corti

fb	fk	fvk0	fmedio	τ0	fv0	μ	ϕ	fv,lim	E	G	FC
600000			345000	9000	20000	0.58	0.77	32500	320000000	128000000	1.2

Verifica a pressoflessione nel piano secondo D.M. 17-01-18 NTC §7.8.2.2.1 in combinazioni non sismiche, γM = 3

Comb.	Quota	N	M	σ0	Mu	c.s.	Verifica
SLU 84	4.35	-15950	24.85	36772	6776.88	272.736	Si
SLU 84	6.45	-15272	-953.65	35211	6715.86	7.042	Si
SLU 82	4.35	-15652	34.85	36086	6752.55	193.753	Si
SLU 82	6.45	-14968	-946.44	34510	6681.94	7.06	Si
SLU 83	4.35	-16132	-89.05	37192	6789.86	76.251	Si
SLU 83	6.45	-15352	-928.58	35395	6724.1	7.241	Si
SLU 42	4.35	-13073	127.31	30141	6379.08	50.105	Si
SLU 42	6.45	-12850	-894.33	29625	6332.96	7.081	Si
SLU 39	4.35	-12958	23.42	29875	6355.56	271.319	Si
SLU 39	6.45	-12626	-862.05	29109	6284.55	7.29	Si
SLU 40	4.35	-12776	137.32	29455	6317.22	46.004	Si
SLU 40	6.45	-12546	-887.12	28925	6266.76	7.064	Si
SLU 34	4.35	-12524	160.42	28875	6261.9	39.034	Si
SLU 34	6.45	-12228	-828.13	28193	6193.29	7.479	Si
SLU 31	4.35	-12227	170.42	28189	6192.88	36.338	Si
SLU 31	6.45	-11924	-820.92	27492	6118.81	7.454	Si
SLU 41	4.35	-13256	13.42	30561	6415.04	477.976	Si
SLU 41	6.45	-12930	-869.26	29810	6349.69	7.305	Si
SLU 81	4.35	-15834	-79.04	36506	6767.9	85.624	Si
SLU 81	6.45	-15048	-921.37	34694	6691.25	7.262	Si

Verifica a pressoflessione nel piano secondo D.M. 17-01-18 NTC §7.8.2.2.1 in combinazioni sismiche, γM = 2

Comb.	Quota	N	M	σ0	Mu	c.s.	Verifica
SLV 1	4.35	-10250	3486.03	23633	6403.77	1.837	Si
SLV 1	6.45	-14756	-4356.21	34021	8247.04	1.893	Si
SLV 8	4.35	-3917	2347.14	9031	2809.63	1.197	Si
SLV 8	6.45	-7268	-1676.51	16756	4857.13	2.897	Si
SLV 13	4.35	-15929	-4595.57	36724	8629.26	1.878	Si
SLV 13	6.45	-8070	3339.26	18607	5298.97	1.587	Si
SLV 4	4.35	-6410	4265.87	14779	4364.35	1.023	Si
SLV 4	6.45	-12380	-4362.54	28543	7348.91	1.685	Si
SLV 15	4.35	-12088	-3815.72	27870	7227.2	1.894	Si
SLV 15	6.45	-5694	3332.93	13128	3936.45	1.181	Si
SLV 3	4.35	-6410	4265.87	14779	4364.35	1.023	Si
SLV 3	6.45	-12380	-4362.54	28543	7348.91	1.685	Si
SLV 7	4.35	-3917	2347.14	9031	2809.63	1.197	Si
SLV 7	6.45	-7268	-1676.51	16756	4857.13	2.897	Si
SLV 2	4.35	-10250	3486.03	23633	6403.77	1.837	Si
SLV 2	6.45	-14756	-4356.21	34021	8247.04	1.893	Si
SLV 16	4.35	-12088	-3815.72	27870	7227.2	1.894	Si
SLV 16	6.45	-5694	3332.93	13128	3936.45	1.181	Si
SLV 14	4.35	-15929	-4595.57	36724	8629.26	1.878	Si
SLV 14	6.45	-8070	3339.26	18607	5298.97	1.587	Si

Verifica a taglio nel piano secondo D.M. 17-01-18 (N.T.C.) §7.8.2.2.2 con rottura per scorrimento in combinazioni non sismiche, γM = 3

Comb.	Quota	N	V par	M	σ0	σN	l'	fvd	Vt scorr.	Vt fess.diag.	Vt,lim	c.s.	Verifica
SLU 31	4.35	-12227	924	170.42		28189	1.5491	9314	4040			4.37	Si
SLU 31	6.45	-11924	1091	-820.92		27492	1.5491	9221	4000			3.67	Si
SLU 41	4.35	-13256	864	13.42		30561	1.5491	9630	4177			4.83	Si
SLU 41	6.45	-12930	1089	-869.26		29810	1.5491	9530	4134			3.8	Si
SLU 84	4.35	-15950	953	24.85		36772	1.5491	10459	4536			4.76	Si
SLU 84	6.45	-15272	1178	-953.65		35211	1.5491	10250	4446			3.77	Si
SLU 34	4.35	-12524	926	160.42		28875	1.5491	9406	4080			4.41	Si
SLU 34	6.45	-12228	1087	-828.13		28193	1.5491	9315	4040			3.72	Si
SLU 42	4.35	-13073	962	127.31		30141	1.5491	9574	4153			4.32	Si
SLU 42	6.45	-12850	1168	-894.33		29625	1.5491	9506	4123			3.53	Si
SLU 39	4.35	-12958	862	23.42		29875	1.5491	9539	4137			4.8	Si
SLU 39	6.45	-12626	1093	-862.05		29109	1.5491	9437	4093			3.75	Si
SLU 40	4.35	-12776	960	137.32		29455	1.5491	9483	4113			4.28	Si
SLU 40	6.45	-12546	1172	-887.12		28925	1.5491	9412	4082			3.48	Si
SLU 36	4.35	-13051	874	75.29		30090	1.5491	9568	4150			4.75	Si
SLU 36	6.45	-12707	1045	-832.74		29297	1.5491	9462	4104			3.93	Si
SLU 33	4.35	-12754	872	85.29		29404	1.5491	9476	4110			4.71	Si
SLU 33	6.45	-12404	1048	-825.53		28597	1.5491	9368	4063			3.88	Si
SLU 82	4.35	-15652	951	34.85		36086	1.5491	10367	4497			4.73	Si
SLU 82	6.45	-14968	1182	-946.44		34510	1.5491	10157	4405			3.73	Si

Verifica a taglio nel piano secondo D.M. 17-01-18 (N.T.C.) §7.8.2.2.2 con rottura per scorrimento in combinazioni sismiche, γM = 2

Comb.	Quota	N	V par	M	σ0	σN	l'	fvd	Vt scorr.	Vt fess.diag.	Vt,lim	c.s.	Verifica
SLV 8	4.35	-3917	4267	2347.14		26598	0.526	13653	2011			0.47	No, Vu<V
SLV 8	6.45	-7268	3420	-1676.51		16756	1.5491	11684	5068			1.48	Si
SLV 1	4.35	-10250	5915	3486.03		28088	1.3034	13951	5091			0.86	No, Vu<V
SLV 1	6.45	-14756	6170	-4356.21		36649	1.438	15663	6307			1.02	Si
SLV 4	4.35	-6410	7130	4265.87		69982	0.3271	16250	1488			0.21	No, Vu<V
SLV 4	6.45	-12380	6830	-4362.54		34912	1.2665	15316	5431			0.8	No, Vu<V
SLV 14	4.35	-15929	-6316	-4595.57		39016	1.4581	16136	6588			1.04	Si
SLV 14	6.45	-8070	-5770	3339.26		26631	1.0823	13660	4139			0.72	No, Vu<V
SLV 15	4.35	-12088	-5101	-3815.72		31360	1.3766	14605	5630			1.1	Si
SLV 15	6.45	-5694	-5111	3332.93		35827	0.5676	15499	2463			0.48	No, Vu<V
SLV 16	4.35	-12088	-5101	-3815.72		31360	1.3766	14605	5630			1.1	Si
SLV 16	6.45	-5694	-5111	3332.93		35827	0.5676	15499	2463			0.48	No, Vu<V
SLV 7	4.35	-3917	4267	2347.14		26598	0.526	13653	2011			0.47	No, Vu<V
SLV 7	6.45	-7268	3420	-1676.51		16756	1.5491	11684	5068			1.48	Si
SLV 13	4.35	-15929	-6316	-4595.57		39016	1.4581	16136	6588			1.04	Si
SLV 13	6.45	-8070	-5770	3339.26		26631	1.0823	13660	4139			0.72	No, Vu<V
SLV 3	4.35	-6410	7130	4265.87		69982	0.3271	16250	1488			0.21	No, Vu<V
SLV 3	6.45	-12380	6830	-4362.54		34912	1.2665	15316	5431			0.8	No, Vu<V
SLV 2	4.35	-10250	5915	3486.03		28088	1.3034	13951	5091			0.86	No, Vu<V
SLV 2	6.45	-14756	6170	-4356.21		36649	1.438	15663	6307			1.02	Si

Verifica a pressoflessione fuori piano D.M. 17-01-18 (N.T.C.)

quota 6.125 Wa 0.05 denominatore 8 γM = 2

Comb.	fd	Sa	σ0	N	M	Mc	Coeff.s.	Verifica
SLV 11	143750	0.38	12508	-5425	157.61	681.77	4.33	Si
SLV 12	143750	0.38	12508	-5425	157.61	681.77	4.33	Si
SLV 16	143750	0.38	13534	-5870	157.61	730.79	4.64	Si
SLV 15	143750	0.38	13534	-5870	157.61	730.79	4.64	Si
SLV 8	143750	0.38	17239	-7477	157.61	899.11	5.7	Si
SLV 7	143750	0.38	17239	-7477	157.61	899.11	5.7	Si
SLV 14	143750	0.38	19144	-8303	157.61	980.35	6.22	Si
SLV 13	143750	0.38	19144	-8303	157.61	980.35	6.22	Si
SLV 3	143750	0.38	29303	-12710	157.61	1352.67	8.58	Si
SLV 4	143750	0.38	29303	-12710	157.61	1352.67	8.58	Si

Verifica dei meccanismi locali di collasso con analisi cinematica lineare

forza di aggancio al piano = 0 quota mezzeria = 6.125 Wa = 0.05 Ta = 0.0752

Comb.	N top	N base	V orto	α0	M*	e*	a0*	aLim	Verifica
SLV 8	-4758	-3917	-163	0.022	705.9	0.92	0.34466	9.97238	No
SLV 7	-4758	-3917	-163	0.022	705.9	0.92	0.34466	9.97238	No
SLV 12	-5594	-5620	-136	0.028	789.9	0.926	0.43534	9.97238	No
SLV 11	-5594	-5620	-136	0.028	789.9	0.926	0.43534	9.97238	No
SLV 10	-11688	-18422	164	0.031	1407.3	0.955	0.47292	9.97238	No
SLV 9	-11688	-18422	164	0.031	1407.3	0.955	0.47292	9.97238	No
SLV 4	-5917	-6410	-89	0.035	822.4	0.929	0.54359	11.26714	No
SLV 3	-5917	-6410	-89	0.035	822.4	0.929	0.54359	11.26714	No
SLV 14	-10530	-15929	90	0.036	1289.6	0.951	0.55712	11.26714	No
SLV 13	-10530	-15929	90	0.036	1289.6	0.951	0.55712	11.26714	No

Tabella dei coefficienti di sicurezza minimi

Stato limite	Coeff.s.	Comb.	Verifica
PF_SLU	7.042	SLU 84	Si
V_SLU	3.482	SLU 40	Si
PF_SLV	1.023	SLV 3	Si
V_SLV	0.209	SLV 3	No
PFFP_SLV	4.326	SLV 11	Si
R_SLV	0.035	SLV 7	No

Maschio 157

Verifiche condotte secondo D.M. 17-01-18 (N.T.C.)

Dati geometrici

X ini.	Y ini.	X fin.	Y fin.	Quota i.	Quota.s	l	Sp.	h netta	h ini.	h fin.	a	a.s.,sx	a.s.,dx
-7.723	-4.784	-7.723	-4.589	L4	L5	0.195	0.3	3.55	3.55	3.55			

Caratteristiche del materiale

(Circolare 7 21-01-19 C8.5.I) Muratura in mattoni pieni e malta di calce LC2_Corti

fb	fk	fvk0	fmedio	τ0	fv0	μ	ϕ	fv,lim	E	G	FC
600000			345000	9000	20000	0.58	0.77	32500	320000000	128000000	1.2

Verifica a pressoflessione nel piano secondo D.M. 17-01-18 NTC §7.8.2.2.1 in combinazioni non sismiche, γM = 3

Comb.	Quota	N	M	σ0	Mu	c.s.	Verifica
SLU 68	4.35	-2400	-0.7	41031	116.15	166.658	Si
SLU 68	7.46	-1290	-14.3	22057	91.74	6.414	Si
SLU 5	4.35	-1813	2.01	30999	109.52	54.397	Si
SLU 5	7.46	-958	-12.01	16370	74.61	6.211	Si
SLU 2	4.35	-1778	2.34	30402	108.69	46.416	Si
SLU 2	7.46	-921	-11.71	15750	72.46	6.188	Si
SLU 10	4.35	-1969	1.15	33652	112.65	97.869	Si
SLU 10	7.46	-1009	-12.08	17254	77.57	6.42	Si
SLU 44	4.35	-2213	1.06	37831	115.57	109.521	Si
SLU 44	7.46	-1172	-13.65	20038	86.18	6.312	Si
SLU 47	4.35	-2248	0.73	38428	115.78	159.244	Si
SLU 47	7.46	-1208	-13.95	20658	87.95	6.302	Si

Comb.	Quota	N	M	σ0	Mu	c.s.	Verifica
SLU 13	4.35	-2004	0.82	34249	113.21	137.582	Si
SLU 13	7.46	-1046	-12.38	17874	79.58	6.425	Si
SLU 23	4.35	-1931	0.92	33004	111.98	122.037	Si
SLU 23	7.46	-1003	-12.06	17149	77.22	6.404	Si
SLU 55	4.35	-2438	-0.46	41678	116.09	250.477	Si
SLU 55	7.46	-1296	-14.33	22162	92.02	6.422	Si
SLU 26	4.35	-1966	0.59	33601	112.6	191.022	Si
SLU 26	7.46	-1039	-12.36	17768	79.24	6.411	Si

Verifica a pressoflessione nel piano secondo D.M. 17-01-18 NTC §7.8.2.2.1 in combinazioni sismiche, γM = 2

Comb.	Quota	N	M	σ0	Mu	c.s.	Verifica
SLV 4	4.35	-538	76.75	0	0	0	No, e>l/2
SLV 4	7.46	-1376	157.9	0	0	0	No, e>l/2
SLV 8	4.35	-2847	372.6	0	0	0	No, e>l/2
SLV 8	7.46	-699	-38.68	11955	61.52	1.591	Si
SLV 10	4.35	-594	-385.92	0	0	0	No, e>l/2
SLV 10	7.46	-1257	24.52	21491	101.02	4.12	Si
SLV 9	4.35	-594	-385.92	0	0	0	No, e>l/2
SLV 9	7.46	-1257	24.52	21491	101.02	4.12	Si
SLV 6	4.35	408	-405.94	0	0	0	No, Trazione
SLV 6	7.46	-1575	139.55	26921	119.72	0.858	No, M>Mu
SLV 7	4.35	-2847	372.6	0	0	0	No, e>l/2
SLV 7	7.46	-699	-38.68	11955	61.52	1.591	Si
SLV 5	4.35	408	-405.94	0	0	0	No, Trazione
SLV 5	7.46	-1575	139.55	26921	119.72	0.858	No, M>Mu
SLV 2	4.35	439	-156.81	0	0	0	No, Trazione
SLV 2	7.46	-1639	211.37	0	0	0	No, e>l/2
SLV 3	4.35	-538	76.75	0	0	0	No, e>l/2
SLV 3	7.46	-1376	157.9	0	0	0	No, e>l/2
SLV 1	4.35	439	-156.81	0	0	0	No, Trazione
SLV 1	7.46	-1639	211.37	0	0	0	No, e>l/2

Verifica a taglio nel piano secondo D.M. 17-01-18 (N.T.C.) §7.8.2.2.2 con rottura per scorrimento in combinazioni non sismiche, γM = 3

Comb.	Quota	N	V par	M	σ0	σN	l'	fvd	Vt scorr.	Vt fess.diag.	Vt,lim	c.s.	Verifica
SLU 52	4.35	-2403	-3	-0.14		41081	0.195	10833	634			229.29	Si
SLU 52	7.46	-1260	-63	-14.02		21543	0.195	8428	493			7.88	Si
SLU 65	4.35	-2365	-4	-0.37		40433	0.195	10833	634			156.92	Si
SLU 65	7.46	-1254	-61	-14		21437	0.195	8414	492			8.13	Si
SLU 2	4.35	-1778	-2	2.34		30402	0.195	9609	562			259.89	Si
SLU 2	7.46	-921	-55	-11.71		15750	0.195	7656	448			8.16	Si
SLU 5	4.35	-1813	-3	2.01		30999	0.195	9689	567			189.66	Si
SLU 5	7.46	-958	-54	-12.01		16370	0.195	7738	453			8.31	Si
SLU 73	4.35	-2555	-3	-1.56		43683	0.195	10833	634			210.38	Si
SLU 73	7.46	-1342	-60	-14.37		22941	0.195	8614	504			8.44	Si
SLU 10	4.35	-1969	-1	1.15		33652	0.195	10042	587			516.83	Si
SLU 10	7.46	-1009	-54	-12.08		17254	0.195	7856	460			8.5	Si
SLU 55	4.35	-2438	-4	-0.46		41678	0.195	10833	634			176.56	Si
SLU 55	7.46	-1296	-62	-14.33		22162	0.195	8511	498			8.02	Si
SLU 68	4.35	-2400	-5	-0.7		41031	0.195	10833	634			130.29	Si
SLU 68	7.46	-1290	-60	-14.3		22057	0.195	8496	497			8.27	Si
SLU 47	4.35	-2248	-5	0.73		38428	0.195	10679	625			135.35	Si
SLU 47	7.46	-1208	-63	-13.95		20658	0.195	8310	486			7.73	Si
SLU 44	4.35	-2213	-4	1.06		37831	0.195	10600	620			163.6	Si
SLU 44	7.46	-1172	-63	-13.65		20038	0.195	8227	481			7.6	Si

Verifica a taglio nel piano secondo D.M. 17-01-18 (N.T.C.) §7.8.2.2.2 con rottura per scorrimento in combinazioni sismiche, γM = 2

Comb.	Quota	N	V par	M	σ0	σN	l'	fvd	Vt scorr.	Vt fess.diag.	Vt,lim	c.s.	Verifica
SLV 2	4.35	439	-253	-156.81		0	0	8333	0			0	No, Vu<V
SLV 2	7.46	-1639	1959	211.37		0	0	8333	0			0	No, Vu<V
SLV 10	4.35	-594	-325	-385.92		0	0	8333	0			0	No, Vu<V
SLV 10	7.46	-1257	38	24.52		21491	0.195	12632	739			19.6	Si
SLV 3	4.35	-538	-36	76.75		0	0	8333	0			0	No, Vu<V
SLV 3	7.46	-1376	1598	157.9		0	0	8333	0			0	No, Vu<V
SLV 6	4.35	408	-408	-405.94		0	0	8333	0			0	No, Vu<V
SLV 6	7.46	-1575	1119	139.55		196805	0.0267	16250	130			0.12	No, Vu<V
SLV 7	4.35	-2847	314	372.6		0	0	8333	0			0	No, Vu<V
SLV 7	7.46	-699	-86	-38.68		18415	0.1266	12016	456			5.33	Si
SLV 9	4.35	-594	-325	-385.92		0	0	8333	0			0	No, Vu<V
SLV 9	7.46	-1257	38	24.52		21491	0.195	12632	739			19.6	Si
SLV 8	4.35	-2847	314	372.6		0	0	8333	0			0	No, Vu<V
SLV 8	7.46	-699	-86	-38.68		18415	0.1266	12016	456			5.33	Si
SLV 5	4.35	408	-408	-405.94		0	0	8333	0			0	No, Vu<V
SLV 5	7.46	-1575	1119	139.55		196805	0.0267	16250	130			0.12	No, Vu<V
SLV 4	4.35	-538	-36	76.75		0	0	8333	0			0	No, Vu<V
SLV 4	7.46	-1376	1598	157.9		0	0	8333	0			0	No, Vu<V
SLV 1	4.35	439	-253	-156.81		0	0	8333	0			0	No, Vu<V
SLV 1	7.46	-1639	1959	211.37		0	0	8333	0			0	No, Vu<V

Verifica a pressoflessione fuori piano D.M. 17-01-18 (N.T.C.)

quota 6.125 Wa 0.05 denominatore 8 γM = 2

Comb.	fd	Sa	σ0	N	M	Mc	Coeff.s.	Verifica
SLV 12	143750	0.38	8012	-469	20.76	65.69	3.16	Si
SLV 11	143750	0.38	8012	-469	20.76	65.69	3.16	Si
SLV 7	143750	0.38	9221	-539	20.76	74.81	3.6	Si
SLV 8	143750	0.38	9221	-539	20.76	74.81	3.6	Si
SLV 16	143750	0.38	18748	-1097	20.76	139.27	6.71	Si
SLV 15	143750	0.38	18748	-1097	20.76	139.27	6.71	Si
SLV 3	143750	0.38	22779	-1333	20.76	162.62	7.83	Si
SLV 4	143750	0.38	22779	-1333	20.76	162.62	7.83	Si
SLV 14	143750	0.38	29160	-1706	20.76	194.81	9.38	Si

Comb.	fd	Sa	σ0	N	M	Mc	Coeff.s.	Verifica
SLV 13	143750	0.38	29160	-1706	20.76	194.81	9.38	Si

Verifica dei meccanismi locali di collasso con analisi cinematica lineare

forza di aggancio al piano = 0 quota mezzeria = 6.125 Wa = 0.05 Ta = 0.0702

Comb.	N top	N base	V orto	α0	M*	e*	a0*	aLim	Verifica
SLV 2	-189	439	-3	0	0	0	0	10.36036	No, Trazione
SLV 5	-719	408	-1	0	0	0	0	9.21471	No, Trazione
SLV 6	-719	408	-1	0	0	0	0	9.21471	No, Trazione
SLV 1	-189	439	-3	0	0	0	0	10.36036	No, Trazione
SLV 13	-1630	-2904	4	0.045	195.3	0.956	0.67889	10.36036	No
SLV 14	-1630	-2904	4	0.045	195.3	0.956	0.67889	10.36036	No
SLV 15	-1608	-3880	3	0.045	193	0.955	0.68115	10.36036	No
SLV 16	-1608	-3880	3	0.045	193	0.955	0.68115	10.36036	No
SLV 9	-1152	-594	1	0.047	146.7	0.943	0.7264	9.21471	No
SLV 10	-1152	-594	1	0.047	146.7	0.943	0.7264	9.21471	No

Tabella dei coefficienti di sicurezza minimi

Stato limite	Coeff.s.	Comb.	Verifica
PF_SLU	6.188	SLU 2	Si
V_SLU	7.597	SLU 44	Si
PF_SLV	0	SLV 6	No
V_SLV	0	SLV 1	No
PFFP_SLV	3.164	SLV 11	Si
R_SLV	0	SLV 6	No

Maschio 158

Verifiche condotte secondo D.M. 17-01-18 (N.T.C.)

Dati geometrici

X ini.	Y ini.	X fin.	Y fin.	Quota i.	Quota.s	l	Sp.	h netta	h ini.	h fin.	a	a.s.,sx	a.s.,dx
-7.723	-3.499	-7.723	-3.248	L4	L5	0.251	0.3	3.55	3.55	3.55			

Caratteristiche del materiale

(Circolare 7 21-01-19 C8.5.I) Muratura in mattoni pieni e malta di calce LC2_Corti

fb	fk	fvk0	fmedio	τ0	fv0	μ	ϕ	fv,lim	E	G	FC
600000			345000	9000	20000	0.58	0.77	32500	320000000	128000000	1.2

Verifica a pressoflessione nel piano secondo D.M. 17-01-18 NTC §7.8.2.2.1 in combinazioni non sismiche, γM = 3

Comb.	Quota	N	M	σ0	Mu	c.s.	Verifica
SLU 39	4.35	-2495	-40.31	33104	186.03	4.614	Si
SLU 39	7.46	-1624	25.3	21545	150.02	5.93	Si
SLU 83	4.35	-3016	-46.01	40024	192.73	4.189	Si
SLU 83	7.46	-1980	30.02	26277	168.51	5.613	Si
SLU 79	4.35	-2955	-43.97	39202	192.52	4.378	Si
SLU 79	7.46	-1957	29.41	25964	167.45	5.693	Si
SLU 2	4.35	-1451	39.88	19249	139.17	3.49	Si
SLU 2	7.46	-1280	11.2	16989	127.29	11.364	Si
SLU 74	4.35	-2930	-44.22	38871	192.39	4.351	Si
SLU 74	7.46	-1932	29.2	25637	166.32	5.696	Si
SLU 77	4.35	-2985	-45.2	39601	192.64	4.262	Si
SLU 77	7.46	-1979	29.95	26263	168.47	5.626	Si
SLU 5	4.35	-1506	38.89	19980	142.75	3.671	Si
SLU 5	7.46	-1328	11.95	17615	130.7	10.94	Si
SLU 41	4.35	-2550	-41.3	33835	187.26	4.534	Si
SLU 41	7.46	-1671	26.04	22171	152.76	5.866	Si
SLU 35	4.35	-2518	-40.49	33412	186.57	4.607	Si
SLU 35	7.46	-1670	25.97	22158	152.71	5.881	Si
SLU 81	4.35	-2961	-45.03	39294	192.55	4.276	Si
SLU 81	7.46	-1933	29.28	25651	166.37	5.682	Si

Verifica a pressoflessione nel piano secondo D.M. 17-01-18 NTC §7.8.2.2.1 in combinazioni sismiche, γM = 2

Comb.	Quota	N	M	σ0	Mu	c.s.	Verifica
SLV 7	4.35	2616	685.03	0	0	0	No, Trazione
SLV 7	7.46	-1722	89.51	22845	175.83	1.964	Si
SLV 8	4.35	2616	685.03	0	0	0	No, Trazione
SLV 8	7.46	-1722	89.51	22845	175.83	1.964	Si
SLV 16	4.35	-129	323.33	0	0	0	No, e>l/2
SLV 16	7.46	-576	-120.1	0	0	0	No, e>l/2
SLV 6	4.35	-6883	-815.25	91325	218.38	0.268	No, M>Mu
SLV 6	7.46	-1385	37.12	18377	147.81	3.982	Si
SLV 12	4.35	2884	760.45	0	0	0	No, Trazione
SLV 12	7.46	-1247	1.23	16552	135.47	110.208	Si
SLV 15	4.35	-129	323.33	0	0	0	No, e>l/2
SLV 15	7.46	-576	-120.1	0	0	0	No, e>l/2
SLV 13	4.35	-2979	-126.75	39527	253.15	1.997	Si
SLV 13	7.46	-475	-135.82	0	0	0	No, e>l/2
SLV 5	4.35	-6883	-815.25	91325	218.38	0.268	No, M>Mu
SLV 5	7.46	-1385	37.12	18377	147.81	3.982	Si
SLV 11	4.35	2884	760.45	0	0	0	No, Trazione
SLV 11	7.46	-1247	1.23	16552	135.47	110.208	Si
SLV 14	4.35	-2979	-126.75	39527	253.15	1.997	Si
SLV 14	7.46	-475	-135.82	0	0	0	No, e>l/2

Verifica a taglio nel piano secondo D.M. 17-01-18 (N.T.C.) §7.8.2.2.2 con rottura per scorrimento in combinazioni non sismiche, γM = 3

Comb.	Quota	N	V par	M	σ0	σN	l'	fvd	Vt scorr.	Vt fess.diag.	Vt,lim	c.s.	Verifica
SLU 2	4.35	-1451	95	39.88		19249	0.2512	8122	612			6.44	Si
SLU 2	7.46	-1280	-60	11.2		16989	0.2512	7821	589			9.89	Si
SLU 26	4.35	-1763	88	32.11		23386	0.2512	8674	654			7.47	Si
SLU 26	7.46	-1494	-56	15.45		19822	0.2512	8199	618			10.97	Si
SLU 47	4.35	-1972	95	34.18		26169	0.2512	9045	682			7.16	Si
SLU 47	7.46	-1637	-63	15.93		21720	0.2512	8452	637			10.16	Si
SLU 5	4.35	-1506	95	38.89		19980	0.2512	8219	619			6.55	Si
SLU 5	7.46	-1328	-59	11.95		17615	0.2512	7904	596			10.16	Si
SLU 13	4.35	-1779	87	31.83		23602	0.2512	8702	656			7.54	Si
SLU 13	7.46	-1493	-58	15.12		19805	0.2512	8196	618			10.71	Si
SLU 65	4.35	-2174	89	28.39		28844	0.2512	9401	709			8	Si
SLU 65	7.46	-1756	-61	18.68		23302	0.2512	8662	653			10.63	Si
SLU 52	4.35	-2190	88	28.1		29060	0.2512	9430	711			8.07	Si
SLU 52	7.46	-1755	-63	18.35		23285	0.2512	8660	653			10.4	Si
SLU 23	4.35	-1707	88	33.1		22655	0.2512	8576	646			7.35	Si
SLU 23	7.46	-1447	-57	14.7		19196	0.2512	8115	612			10.67	Si
SLU 10	4.35	-1724	87	32.81		22871	0.2512	8605	649			7.42	Si
SLU 10	7.46	-1445	-59	14.37		19179	0.2512	8113	611			10.42	Si
SLU 44	4.35	-1917	96	35.17		25438	0.2512	8947	674			7.05	Si
SLU 44	7.46	-1590	-64	15.18		21094	0.2512	8368	631			9.9	Si

Verifica a taglio nel piano secondo D.M. 17-01-18 (N.T.C.) §7.8.2.2.2 con rottura per scorrimento in combinazioni sismiche, γM = 2

Comb.	Quota	N	V par	M	σ0	σN	l'	fvd	Vt scorr.	Vt fess.diag.	Vt,lim	c.s.	Verifica
SLV 8	4.35	2616	1327	685.03		0	0	8333	0			0	No, Vu<V
SLV 8	7.46	-1722	-516	89.51		25985	0.2209	13530	897			1.74	Si
SLV 7	4.35	2616	1327	685.03		0	0	8333	0			0	No, Vu<V
SLV 7	7.46	-1722	-516	89.51		25985	0.2209	13530	897			1.74	Si
SLV 14	4.35	-2979	-418	-126.75		39850	0.2492	16250	1215			2.9	Si
SLV 14	7.46	-475	-680	-135.82		0	0	8333	0			0	No, Vu<V
SLV 12	4.35	2884	1322	760.45		0	0	8333	0			0	No, Vu<V
SLV 12	7.46	-1247	-1058	1.23		16552	0.2512	11644	878			0.83	No, Vu<V
SLV 15	4.35	-129	382	323.33		0	0	8333	0			0	No, Vu<V
SLV 15	7.46	-576	-1146	-120.1		0	0	8333	0			0	No, Vu<V
SLV 6	4.35	-6883	-1342	-815.25		1067572	0.0215	16250	105			0.08	No, Vu<V
SLV 6	7.46	-1385	1038	37.12		18377	0.2512	12009	905			0.87	No, Vu<V
SLV 16	4.35	-129	382	323.33		0	0	8333	0			0	No, Vu<V
SLV 16	7.46	-576	-1146	-120.1		0	0	8333	0			0	No, Vu<V
SLV 13	4.35	-2979	-418	-126.75		39850	0.2492	16250	1215			2.9	Si
SLV 13	7.46	-475	-680	-135.82		0	0	8333	0			0	No, Vu<V
SLV 5	4.35	-6883	-1342	-815.25		1067572	0.0215	16250	105			0.08	No, Vu<V
SLV 5	7.46	-1385	1038	37.12		18377	0.2512	12009	905			0.87	No, Vu<V
SLV 11	4.35	2884	1322	760.45		0	0	8333	0			0	No, Vu<V
SLV 11	7.46	-1247	-1058	1.23		16552	0.2512	11644	878			0.83	No, Vu<V

Verifica a pressoflessione fuori piano D.M. 17-01-18 (N.T.C.)

quota 6.125 Wa 0.05 denominatore 8 γM = 2

Comb.	fd	Sa	σ0	N	M	Mc	Coeff.s.	Verifica
SLV 6	143750	0.38	16936	-1276	26.75	164.93	6.17	Si
SLV 5	143750	0.38	16936	-1276	26.75	164.93	6.17	Si
SLV 10	143750	0.38	19241	-1450	26.75	183.27	6.85	Si
SLV 9	143750	0.38	19241	-1450	26.75	183.27	6.85	Si
SLV 1	143750	0.38	21171	-1596	26.75	197.87	7.4	Si
SLV 2	143750	0.38	21171	-1596	26.75	197.87	7.4	Si
SLV 4	143750	0.38	27106	-2043	26.75	238.45	8.91	Si
SLV 3	143750	0.38	27106	-2043	26.75	238.45	8.91	Si
SLV 13	143750	0.38	28854	-2175	26.75	249.16	9.31	Si
SLV 14	143750	0.38	28854	-2175	26.75	249.16	9.31	Si

Verifica dei meccanismi locali di collasso con analisi cinematica lineare

forza di aggancio al piano = 0 quota mezzeria = 6.125 Wa = 0.05 Ta = 0.0702

Comb.	N top	N base	V orto	α0	M*	e*	a0*	aLim	Verifica
SLV 7	-1036	2616	-11	0	0	0	0	9.21471	No, Trazione
SLV 12	-940	2884	-11	0	0	0	0	9.21471	No, Trazione
SLV 8	-1036	2616	-11	0	0	0	0	9.21471	No, Trazione
SLV 11	-940	2884	-11	0	0	0	0	9.21471	No, Trazione
SLV 6	-1277	-6883	13	0.04	168	0.937	0.62318	9.21471	No
SLV 5	-1277	-6883	13	0.04	168	0.937	0.62318	9.21471	No
SLV 9	-1181	-6616	13	0.04	158.4	0.934	0.62475	9.21471	No
SLV 10	-1181	-6616	13	0.04	158.4	0.934	0.62475	9.21471	No
SLV 1	-1304	-3870	5	0.046	170.8	0.938	0.70641	10.36036	No
SLV 2	-1304	-3870	5	0.046	170.8	0.938	0.70641	10.36036	No

Tabella dei coefficienti di sicurezza minimi

Stato limite	Coeff.s.	Comb.	Verifica
PF_SLU	3.49	SLU 2	Si
V_SLU	6.442	SLU 2	Si
PF_SLV	0	SLV 12	No
V_SLV	0	SLV 7	No
PFFP_SLV	6.166	SLV 5	Si
R_SLV	0	SLV 12	No

Maschio 159

Verifiche condotte secondo D.M. 17-01-18 (N.T.C.)

Dati geometrici

X ini.	Y ini.	X fin.	Y fin.	Quota i.	Quota.s	l	Sp.	h netta	h ini.	h fin.	a	a.s.,sx	a.s.,dx
-6.268	-3.248	-6.268	1.046	L4	L5	4.294	0.14	3.55	3.55	3.55			

Caratteristiche del materiale

(Circolare 7 21-01-19 C8.5.I) Muratura in mattoni pieni e malta di calce LC2_Corti

fb	fk	fvk0	fmedio	τ0	fv0	μ	ϕ	fv,lim	E	G	FC
600000			345000	9000	20000	0.58	0.77	32500	320000000	128000000	1.2

Verifica a pressoflessione nel piano secondo D.M. 17-01-18 NTC §7.8.2.2.1 in combinazioni non sismiche, γM = 3

Comb.	Quota	N	M	σ0	Mu	c.s.	Verifica
SLU 38	4.35	-27562	29.76	45850	25866.22	869.231	Si
SLU 38	7.9	-18513	1832.94	30797	24718.91	13.486	Si
SLU 34	4.35	-26722	-58.23	44453	26061.97	447.57	Si
SLU 34	7.9	-17945	1846.25	29852	24407.16	13.22	Si
SLU 75	4.35	-32349	-168.88	53814	23569.04	139.563	Si
SLU 75	7.9	-21638	1934.3	35996	25926.75	13.404	Si
SLU 36	4.35	-27906	75.11	46423	25768.03	343.052	Si
SLU 36	7.9	-18850	1905.34	31358	24890.22	13.063	Si
SLU 76	4.35	-31765	-231.75	52842	23957.26	103.376	Si
SLU 76	7.9	-21272	2006.58	35387	25829.55	12.872	Si
SLU 73	4.35	-31165	-302.22	51844	24324.35	80.485	Si
SLU 73	7.9	-20733	1875.22	34490	25665	13.686	Si
SLU 80	4.35	-32604	-143.76	54239	23390.19	162.703	Si
SLU 80	7.9	-21841	1993.28	36333	25975.45	13.032	Si
SLU 84	4.35	-33377	-163.58	55523	22814.25	139.471	Si
SLU 84	7.9	-22160	1954.98	36863	26044.88	13.322	Si
SLU 70	4.35	-29748	-216.6	49487	25066.43	115.726	Si
SLU 70	7.9	-20175	1848.5	33563	25467.97	13.778	Si
SLU 78	4.35	-32949	-98.4	54812	23139.68	235.15	Si
SLU 78	7.9	-22177	2065.67	36893	26048.51	12.61	Si

Verifica a pressoflessione nel piano secondo D.M. 17-01-18 NTC §7.8.2.2.1 in combinazioni sismiche, γM = 2

Comb.	Quota	N	M	σ0	Mu	c.s.	Verifica
SLV 9	4.35	-25350	-4721.68	42171	35640.54	7.548	Si
SLV 9	7.9	-17050	1237.2	28363	28107.08	22.718	Si
SLV 8	4.35	-19047	4132.81	31686	30288.11	7.329	Si
SLV 8	7.9	-12125	757.91	20170	21733.53	28.675	Si
SLV 12	4.35	-20971	4866.67	34886	32167.9	6.61	Si
SLV 12	7.9	-14057	579.56	23384	24402.85	42.106	Si
SLV 2	4.35	-19650	-2955.8	32688	30899.93	10.454	Si
SLV 2	7.9	-11816	1393.45	19657	21286.9	15.276	Si
SLV 6	4.35	-23427	-5455.55	38971	34253.22	6.279	Si
SLV 6	7.9	-15118	1415.55	25149	25775.78	18.209	Si
SLV 5	4.35	-23427	-5455.55	38971	34253.22	6.279	Si
SLV 5	7.9	-15118	1415.55	25149	25775.78	18.209	Si
SLV 10	4.35	-25350	-4721.68	42171	35640.54	7.548	Si
SLV 10	7.9	-17050	1237.2	28363	28107.08	22.718	Si
SLV 1	4.35	-19650	-2955.8	32688	30899.93	10.454	Si
SLV 1	7.9	-11816	1393.45	19657	21286.9	15.276	Si
SLV 11	4.35	-20971	4866.67	34886	32167.9	6.61	Si
SLV 11	7.9	-14057	579.56	23384	24402.85	42.106	Si
SLV 7	4.35	-19047	4132.81	31686	30288.11	7.329	Si
SLV 7	7.9	-12125	757.91	20170	21733.53	28.675	Si

Verifica a taglio nel piano secondo D.M. 17-01-18 (N.T.C.) §7.8.2.2.2 con rottura per scorrimento in combinazioni non sismiche, γM = 3

Comb.	Quota	N	V par	M	σ0	σN	l'	fvd	Vt scorr.	Vt fess.diag.	Vt,lim	c.s.	Verifica
SLU 73	4.35	-31165	-2249	-302.22		51844	4.2938	10833	6512			2.9	Si
SLU 73	7.9	-20733	-1581	1875.22		34490	4.2938	10154	6104			3.86	Si
SLU 26	4.35	-23521	-2216	-176.43		39128	4.2938	10773	6476			2.92	Si
SLU 26	7.9	-15943	-1545	1629.08		26522	4.2938	9092	5465			3.54	Si
SLU 2	4.35	-19789	-2174	-422.03		32920	4.2938	9945	5978			2.75	Si
SLU 2	7.9	-13357	-1502	1216.97		22220	4.2938	8518	5121			3.41	Si
SLU 5	4.35	-20389	-2191	-351.56		33917	4.2938	10078	6058			2.76	Si
SLU 5	7.9	-13896	-1519	1348.33		23117	4.2938	8638	5192			3.42	Si
SLU 55	4.35	-28632	-2240	-406.88		47630	4.2938	10833	6512			2.91	Si
SLU 55	7.9	-19226	-1572	1725.84		31983	4.2938	9820	5903			3.75	Si
SLU 68	4.35	-28564	-2243	-349.95		47517	4.2938	10833	6512			2.9	Si
SLU 68	7.9	-19270	-1574	1789.41		32057	4.2938	9830	5909			3.75	Si
SLU 10	4.35	-22990	-2197	-303.83		38244	4.2938	10655	6405			2.92	Si
SLU 10	7.9	-15359	-1525	1434.14		25551	4.2938	8962	5387			3.53	Si
SLU 34	4.35	-26722	-2240	-58.23		44453	4.2938	10833	6512			2.91	Si
SLU 34	7.9	-17945	-1568	1846.25		29852	4.2938	9536	5732			3.66	Si
SLU 23	4.35	-22922	-2199	-246.9		38131	4.2938	10640	6396			2.91	Si
SLU 23	7.9	-15404	-1527	1497.71		25625	4.2938	8972	5393			3.53	Si
SLU 76	4.35	-31765	-2266	-231.75		52842	4.2938	10833	6512			2.87	Si
SLU 76	7.9	-21272	-1598	2006.58		35387	4.2938	10274	6176			3.86	Si

Verifica a taglio nel piano secondo D.M. 17-01-18 (N.T.C.) §7.8.2.2.2 con rottura per scorrimento in combinazioni sismiche, γM = 2

Comb.	Quota	N	V par	M	σ0	σN	l'	fvd	Vt scorr.	Vt fess.diag.	Vt,lim	c.s.	Verifica
SLV 8	4.35	-19047	11547	4132.81		31686	4.2938	14670	8819			0.76	No, Vu<V
SLV 8	7.9	-12125	10829	757.91		20170	4.2938	12367	7434			0.69	No, Vu<V
SLV 12	4.35	-20971	12088	4866.67		34886	4.2938	15311	9204			0.76	No, Vu<V
SLV 12	7.9	-14057	9751	579.56		23384	4.2938	13010	7821			0.8	No, Vu<V
SLV 6	4.35	-23427	-12349	-5455.55		38971	4.2938	16128	9695			0.79	No, Vu<V
SLV 6	7.9	-15118	-10036	1415.55		25149	4.2938	13363	8033			0.8	No, Vu<V
SLV 10	4.35	-25350	-11808	-4721.68		42171	4.2938	16250	9768			0.83	No, Vu<V
SLV 10	7.9	-17050	-11114	1237.2		28363	4.2938	14006	8419			0.76	No, Vu<V
SLV 5	4.35	-23427	-12349	-5455.55		38971	4.2938	16128	9695			0.79	No, Vu<V
SLV 5	7.9	-15118	-10036	1415.55		25149	4.2938	13363	8033			0.8	No, Vu<V

Comb.	Quota	N	V par	M	σ0	σN	l'	fvd	Vt scorr.	Vt fess.diag.	Vt,lim	c.s.	Verifica
SLV 4	4.35	-18336	2552	-79.3		30502	4.2938	14434	8677			3.4	Si
SLV 4	7.9	-10918	4784	1196.16		18163	4.2938	11966	7193			1.5	Si
SLV 9	4.35	-25350	-11808	-4721.68		42171	4.2938	16250	9768			0.83	No, Vu<V
SLV 9	7.9	-17050	-11114	1237.2		28363	4.2938	14006	8419			0.76	No, Vu<V
SLV 3	4.35	-18336	2552	-79.3		30502	4.2938	14434	8677			3.4	Si
SLV 3	7.9	-10918	4784	1196.16		18163	4.2938	11966	7193			1.5	Si
SLV 11	4.35	-20971	12088	4866.67		34886	4.2938	15311	9204			0.76	No, Vu<V
SLV 11	7.9	-14057	9751	579.56		23384	4.2938	13010	7821			0.8	No, Vu<V
SLV 7	4.35	-19047	11547	4132.81		31686	4.2938	14670	8819			0.76	No, Vu<V
SLV 7	7.9	-12125	10829	757.91		20170	4.2938	12367	7434			0.69	No, Vu<V

Verifica a pressoflessione fuori piano D.M. 17-01-18 (N.T.C.)

quota 6.125 Wa 0.03 denominatore 8 γM = 2

Comb.	fd	Sa	σ0	N	M	Mc	Coeff.s.	Verifica
SLV 4	143750	0.38	22745	-13673	233.67	778.92	3.33	Si
SLV 3	143750	0.38	22745	-13673	233.67	778.92	3.33	Si
SLV 1	143750	0.38	25015	-15037	233.67	837.1	3.58	Si
SLV 2	143750	0.38	25015	-15037	233.67	837.1	3.58	Si
SLV 8	143750	0.38	25066	-15068	233.67	838.38	3.59	Si
SLV 7	143750	0.38	25066	-15068	233.67	838.38	3.59	Si
SLV 12	143750	0.38	29326	-17629	233.67	937.83	4.01	Si
SLV 11	143750	0.38	29326	-17629	233.67	937.83	4.01	Si
SLV 6	143750	0.38	32633	-19616	233.67	1006.42	4.31	Si
SLV 5	143750	0.38	32633	-19616	233.67	1006.42	4.31	Si

Verifica dei meccanismi locali di collasso con analisi cinematica lineare

forza di aggancio al piano = 0 quota mezzeria = 6.125 Wa = 0.03 Ta = 0.1503

Comb.	N top	N base	V orto	α0	M*	e*	a0*	aLim	Verifica
SLV 9	-17050	-25350	7	0.021	2036.9	0.956	0.32466	16.27364	No
SLV 10	-17050	-25350	7	0.021	2036.9	0.956	0.32466	16.27364	No
SLV 13	-18256	-26062	2	0.022	2159.5	0.959	0.32614	16.27364	No
SLV 14	-18256	-26062	2	0.022	2159.5	0.959	0.32614	16.27364	No
SLV 16	-17358	-24748	-2	0.022	2068.2	0.957	0.32737	16.27364	No
SLV 15	-17358	-24748	-2	0.022	2068.2	0.957	0.32737	16.27364	No
SLV 5	-15118	-23427	7	0.022	1840.6	0.952	0.32871	16.27364	No
SLV 6	-15118	-23427	7	0.022	1840.6	0.952	0.32871	16.27364	No
SLV 11	-14057	-20971	-7	0.022	1732.8	0.95	0.33148	16.27364	No
SLV 12	-14057	-20971	-7	0.022	1732.8	0.95	0.33148	16.27364	No

Tabella dei coefficienti di sicurezza minimi

Stato limite	Coeff.s.	Comb.	Verifica
PF_SLU	12.61	SLU 78	Si
V_SLU	2.75	SLU 2	Si
PF_SLV	6.279	SLV 5	Si
V_SLV	0.687	SLV 7	No
PFFP_SLV	3.333	SLV 3	Si
R_SLV	0.02	SLV 9	No

Maschio 160

Verifiche condotte secondo D.M. 17-01-18 (N.T.C.)

Dati geometrici

X ini.	Y ini.	X fin.	Y fin.	Quota i.	Quota.s	l	Sp.	h netta	h ini.	h fin.	a	a.s.,sx	a.s.,dx
-7.464	-3.248	-8.554	-3.248	L4	L5	1.09	0.28	3.55	3.55	3.55			

Caratteristiche del materiale

(Circolare 7 21-01-19 C8.5.I) Muratura in mattoni pieni e malta di calce LC2_Corti

fb	fk	fvk0	fmedio	τ0	fv0	μ	ϕ	fv,lim	E	G	FC
600000			345000	9000	20000	0.58	0.77	32500	320000000	128000000	1.2

Verifica a pressoflessione nel piano secondo D.M. 17-01-18 NTC §7.8.2.2.1 in combinazioni non sismiche, γM = 3

Comb.	Quota	N	M	σ0	Mu	c.s.	Verifica
SLU 82	5.25	-13389	-869.29	43868	3367.24	3.874	Si
SLU 82	7.15	-9835	-548.91	32223	3239.62	5.902	Si
SLU 63	5.25	-12613	-830.65	41327	3386.63	4.077	Si
SLU 63	7.15	-9118	-512.5	29875	3146.81	6.14	Si
SLU 75	5.25	-13287	-840.06	43536	3371.28	4.013	Si
SLU 75	7.15	-9762	-561.71	31986	3231.27	5.753	Si
SLU 80	5.25	-13429	-852.46	44002	3365.5	3.948	Si
SLU 80	7.15	-9864	-562.31	32321	3242.99	5.767	Si
SLU 84	5.25	-13647	-879.23	44716	3354.9	3.816	Si
SLU 84	7.15	-10058	-562.75	32956	3263.99	5.8	Si
SLU 78	5.25	-13546	-850.01	44384	3360.09	3.953	Si
SLU 78	7.15	-9986	-575.55	32719	3256.35	5.658	Si
SLU 55	5.25	-12033	-829.68	39426	3383.9	4.079	Si
SLU 55	7.15	-8508	-467.35	27878	3050.12	6.526	Si
SLU 83	5.25	-13802	-825.63	45224	3346.11	4.053	Si
SLU 83	7.15	-10346	-609.06	33899	3292.11	5.405	Si
SLU 76	5.25	-13067	-878.25	42815	3378.48	3.847	Si
SLU 76	7.15	-9449	-517.6	30959	3192.43	6.168	Si
SLU 73	5.25	-12808	-868.31	41967	3384.23	3.897	Si
SLU 73	7.15	-9225	-503.76	30225	3162.08	6.277	Si

Verifica a pressoflessione nel piano secondo D.M. 17-01-18 NTC §7.8.2.2.1 in combinazioni sismiche, γM = 2

Comb.	Quota	N	M	σ0	Mu	c.s.	Verifica
SLV 14	5.25	-14279	-3797.65	46785	4802.32	1.265	Si
SLV 14	7.15	-6864	1093.81	22491	3052.5	2.791	Si
SLV 2	5.25	-6511	3207.45	21333	2928.89	0.913	No, M>Mu
SLV 2	7.15	-10660	-2649.72	34927	4148.97	1.566	Si
SLV 11	5.25	-6755	-2437.89	22132	3014.58	1.237	Si
SLV 11	7.15	366	1335.84	0	0	0	No, Trazione
SLV 13	5.25	-14279	-3797.65	46785	4802.32	1.265	Si
SLV 13	7.15	-6864	1093.81	22491	3052.5	2.791	Si
SLV 16	5.25	-12061	-4301.66	39518	4447.35	1.034	Si
SLV 16	7.15	-2914	1810.24	0	0	0	No, e>l/2
SLV 1	5.25	-6511	3207.45	21333	2928.89	0.913	No, M>Mu
SLV 1	7.15	-10660	-2649.72	34927	4148.97	1.566	Si
SLV 12	5.25	-6755	-2437.89	22132	3014.58	1.237	Si
SLV 12	7.15	366	1335.84	0	0	0	No, Trazione
SLV 15	5.25	-12061	-4301.66	39518	4447.35	1.034	Si
SLV 15	7.15	-2914	1810.24	0	0	0	No, e>l/2
SLV 4	5.25	-4293	2703.44	0	0	0	No, e>l/2
SLV 4	7.15	-6710	-1933.29	21984	2998.85	1.551	Si
SLV 3	5.25	-4293	2703.44	0	0	0	No, e>l/2
SLV 3	7.15	-6710	-1933.29	21984	2998.85	1.551	Si

Verifica a taglio nel piano secondo D.M. 17-01-18 (N.T.C.) §7.8.2.2.2 con rottura per scorrimento in combinazioni non sismiche, γM = 3

Comb.	Quota	N	V par	M	σ0	σN	l'	fvd	Vt scorr.	Vt fess.diag.	Vt,lim	c.s.	Verifica
SLU 63	5.25	-12613	-904	-830.65		41327	1.09	10833	3306			3.66	Si
SLU 63	7.15	-9118	-534	-512.5		29875	1.09	9539	2911			5.45	Si
SLU 84	5.25	-13647	-928	-879.23		44716	1.09	10833	3306			3.56	Si
SLU 84	7.15	-10058	-618	-562.75		32956	1.09	9950	3037			4.91	Si
SLU 73	5.25	-12808	-905	-868.31		41967	1.09	10833	3306			3.66	Si
SLU 73	7.15	-9225	-542	-503.76		30225	1.09	9586	2926			5.4	Si
SLU 80	5.25	-13429	-900	-852.46		44002	1.09	10833	3306			3.67	Si
SLU 80	7.15	-9864	-584	-562.31		32321	1.09	9865	3011			5.15	Si
SLU 82	5.25	-13389	-920	-869.29		43868	1.09	10833	3306			3.6	Si
SLU 82	7.15	-9835	-603	-548.91		32223	1.09	9852	3007			4.98	Si
SLU 52	5.25	-11774	-880	-819.73		38578	1.09	10699	3265			3.71	Si
SLU 52	7.15	-8285	-458	-453.51		27145	1.09	9175	2800			6.12	Si
SLU 83	5.25	-13802	-895	-825.63		45224	1.09	10833	3306			3.69	Si
SLU 83	7.15	-10346	-638	-609.06		33899	1.09	10075	3075			4.82	Si
SLU 76	5.25	-13067	-913	-878.25		42815	1.09	10833	3306			3.62	Si
SLU 76	7.15	-9449	-556	-517.6		30959	1.09	9683	2955			5.31	Si
SLU 61	5.25	-12354	-895	-820.71		40479	1.09	10833	3306			3.69	Si
SLU 61	7.15	-8894	-519	-498.66		29142	1.09	9441	2881			5.55	Si
SLU 55	5.25	-12033	-889	-829.68		39426	1.09	10812	3300			3.71	Si
SLU 55	7.15	-8508	-472	-467.35		27878	1.09	9273	2830			5.99	Si

Verifica a taglio nel piano secondo D.M. 17-01-18 (N.T.C.) §7.8.2.2.2 con rottura per scorrimento in combinazioni sismiche, γM = 2

Comb.	Quota	N	V par	M	σ0	σN	l'	fvd	Vt scorr.	Vt fess.diag.	Vt,lim	c.s.	Verifica
SLV 4	5.25	-4293	5282	2703.44		0	0	8333	0			0	No, Vu<V
SLV 4	7.15	-6710	1912	-1933.29		31096	0.7706	14553	3140			1.64	Si
SLV 1	5.25	-6511	5465	3207.45		148006	0.1571	16250	715			0.13	No, Vu<V
SLV 1	7.15	-10660	2304	-2649.72		42810	0.8893	16250	4046			1.76	Si
SLV 11	5.25	-6755	-2705	-2437.89		43682	0.5523	16250	2513			0.93	No, Vu<V
SLV 11	7.15	366	-1765	1335.84		0	0	8333	0			0	No, Vu<V
SLV 3	5.25	-4293	5282	2703.44		0	0	8333	0			0	No, Vu<V
SLV 3	7.15	-6710	1912	-1933.29		31096	0.7706	14553	3140			1.64	Si
SLV 2	5.25	-6511	5465	3207.45		148006	0.1571	16250	715			0.13	No, Vu<V
SLV 2	7.15	-10660	2304	-2649.72		42810	0.8893	16250	4046			1.76	Si
SLV 12	5.25	-6755	-2705	-2437.89		43682	0.5523	16250	2513			0.93	No, Vu<V
SLV 12	7.15	366	-1765	1335.84		0	0	8333	0			0	No, Vu<V
SLV 16	5.25	-12061	-6676	-4301.66		76234	0.565	16250	2571			0.39	No, Vu<V
SLV 16	7.15	-2914	-3041	1810.24		0	0	8333	0			0	No, Vu<V
SLV 15	5.25	-12061	-6676	-4301.66		76234	0.565	16250	2571			0.39	No, Vu<V
SLV 15	7.15	-2914	-3041	1810.24		0	0	8333	0			0	No, Vu<V
SLV 13	5.25	-14279	-6493	-3797.65		60918	0.8371	16250	3809			0.59	No, Vu<V
SLV 13	7.15	-6864	-2649	1093.81		22491	1.09	12832	3916			1.48	Si
SLV 14	5.25	-14279	-6493	-3797.65		60918	0.8371	16250	3809			0.59	No, Vu<V
SLV 14	7.15	-6864	-2649	1093.81		22491	1.09	12832	3916			1.48	Si

Verifica a pressoflessione fuori piano D.M. 17-01-18 (N.T.C.)

quota 6.125 Wa 0.05 denominatore 8 γM = 2

Comb.	fd	Sa	σ0	N	M	Mc	Coeff.s.	Verifica
SLV 7	143750	0.38	5676	-1732	110.9	231.26	2.09	Si
SLV 8	143750	0.38	5676	-1732	110.9	231.26	2.09	Si
SLV 4	143750	0.38	9609	-2933	110.9	378.3	3.41	Si
SLV 3	143750	0.38	9609	-2933	110.9	378.3	3.41	Si
SLV 12	143750	0.38	13773	-4203	110.9	522.15	4.71	Si
SLV 11	143750	0.38	13773	-4203	110.9	522.15	4.71	Si
SLV 1	143750	0.38	21078	-6433	110.9	745.25	6.72	Si
SLV 2	143750	0.38	21078	-6433	110.9	745.25	6.72	Si
SLV 15	143750	0.38	36598	-11170	110.9	1095.39	9.88	Si
SLV 16	143750	0.38	36598	-11170	110.9	1095.39	9.88	Si

Verifica dei meccanismi locali di collasso con analisi cinematica lineare

forza di aggancio al piano = 0 quota mezzeria = 6.125 Wa = 0.05 Ta = 0.0752

Comb.	N top	N base	V orto	α0	M*	e*	a0*	aLim	Verifica
SLV 12	-980	-4512	-107	0.005	265.6	0.889	0.07563	9.97238	No
SLV 11	-980	-4512	-107	0.005	265.6	0.889	0.07563	9.97238	No
SLV 8	-2226	-5828	-124	0.013	384.9	0.904	0.20215	9.97238	No
SLV 7	-2226	-5828	-124	0.013	384.9	0.904	0.20215	9.97238	No

Comb.	N top	N base	V orto	α0	M*	e*	a0*	aLim	Verifica
SLV 9	-9109	-9385	122	0.031	1080.1	0.958	0.47264	9.97238	No
SLV 10	-9109	-9385	122	0.031	1080.1	0.958	0.47264	9.97238	No
SLV 14	-4811	-6145	63	0.035	644.1	0.935	0.54774	11.26714	No
SLV 13	-4811	-6145	63	0.035	644.1	0.935	0.54774	11.26714	No
SLV 4	-6524	-9068	-65	0.036	817.6	0.946	0.55045	11.26714	No
SLV 3	-6524	-9068	-65	0.036	817.6	0.946	0.55045	11.26714	No

Tabella dei coefficienti di sicurezza minimi

Stato limite	Coeff.s.	Comb.	Verifica
PF_SLU	3.816	SLU 84	Si
V_SLU	3.562	SLU 84	Si
PF_SLV	0	SLV 12	No
V_SLV	0	SLV 3	No
PFFP_SLV	2.085	SLV 7	Si
R_SLV	0.008	SLV 11	No

Maschio 161

Verifiche condotte secondo D.M. 17-01-18 (N.T.C.)

Dati geometrici

X ini.	Y ini.	X fin.	Y fin.	Quota i.	Quota.s	l	Sp.	h netta	h ini.	h fin.	a	a.s.,sx	a.s.,dx
-5.158	1.046	-5.158	1.365	L4	L5	0.319	0.14	3.55	3.55	3.55			

Caratteristiche del materiale

(Circolare 7 21-01-19 C8.5.I) Muratura in mattoni pieni e malta di calce LC2_Corti

fb	fk	fvk0	fmedio	τ0	fv0	μ	ϕ	fv,lim	E	G	FC
600000			345000	9000	20000	0.58	0.77	32500	320000000	128000000	1.2

Verifica a pressoflessione nel piano secondo D.M. 17-01-18 NTC §7.8.2.2.1 in combinazioni non sismiche, γM = 3

Comb.	Quota	N	M	σ0	Mu	c.s.	Verifica
SLU 78	4.35	-2597	60.24	58123	118.68	1.97	Si
SLU 78	6.45	-1755	-17.78	39283	144.97	8.152	Si
SLU 83	4.35	-2661	64.76	59573	114.08	1.762	Si
SLU 83	6.45	-1716	-24.53	38412	144.68	5.897	Si
SLU 75	4.35	-2538	58.91	56814	122.51	2.08	Si
SLU 75	6.45	-1710	-17.32	38285	144.63	8.352	Si
SLU 79	4.35	-2572	58.52	57564	120.35	2.057	Si
SLU 79	6.45	-1730	-19.33	38721	144.8	7.49	Si
SLU 76	4.35	-2506	59.49	56088	124.51	2.093	Si
SLU 76	6.45	-1680	-16.41	37597	144.29	8.791	Si
SLU 84	4.35	-2657	66.14	59473	114.41	1.73	Si
SLU 84	6.45	-1713	-23.06	38336	144.65	6.272	Si
SLU 80	4.35	-2567	59.9	57464	120.65	2.014	Si
SLU 80	6.45	-1726	-17.86	38645	144.77	8.105	Si
SLU 77	4.35	-2601	58.85	58223	118.37	2.011	Si
SLU 77	6.45	-1758	-19.25	39359	144.99	7.53	Si
SLU 82	4.35	-2598	64.81	58164	118.55	1.829	Si
SLU 82	6.45	-1668	-22.6	37338	144.15	6.379	Si
SLU 81	4.35	-2603	63.43	58264	118.25	1.864	Si
SLU 81	6.45	-1671	-24.07	37413	144.19	5.991	Si

Verifica a pressoflessione nel piano secondo D.M. 17-01-18 NTC §7.8.2.2.1 in combinazioni sismiche, γM = 2

Comb.	Quota	N	M	σ0	Mu	c.s.	Verifica
SLV 6	4.35	2364	-398.14	0	0	0	No, Trazione
SLV 6	6.45	-4267	317.35	95517	148.6	0.468	No, M>Mu
SLV 7	4.35	-5040	393.47	112821	61.64	0.157	No, M>Mu
SLV 7	6.45	2279	-364.68	0	0	0	No, Trazione
SLV 1	4.35	509	-200.54	0	0	0	No, Trazione
SLV 1	6.45	-1496	37.48	33487	173.27	4.623	Si
SLV 10	4.35	1732	-330.02	0	0	0	No, Trazione
SLV 10	6.45	-4678	352.64	104725	106.68	0.303	No, M>Mu
SLV 8	4.35	-5040	393.47	112821	61.64	0.157	No, M>Mu
SLV 8	6.45	2279	-364.68	0	0	0	No, Trazione
SLV 3	4.35	-1712	36.94	38327	187.49	5.075	Si
SLV 3	6.45	468	-167.13	0	0	0	No, Trazione
SLV 9	4.35	1732	-330.02	0	0	0	No, Trazione
SLV 9	6.45	-4678	352.64	104725	106.68	0.303	No, M>Mu
SLV 2	4.35	509	-200.54	0	0	0	No, Trazione
SLV 2	6.45	-1496	37.48	33487	173.27	4.623	Si
SLV 4	4.35	-1712	36.94	38327	187.49	5.075	Si
SLV 4	6.45	468	-167.13	0	0	0	No, Trazione
SLV 5	4.35	2364	-398.14	0	0	0	No, Trazione
SLV 5	6.45	-4267	317.35	95517	148.6	0.468	No, M>Mu

Verifica a taglio nel piano secondo D.M. 17-01-18 (N.T.C.) §7.8.2.2.2 con rottura per scorrimento in combinazioni non sismiche, γM = 3

Comb.	Quota	N	V par	M	σ0	σN	l'	fvd	Vt scorr.	Vt fess.diag.	Vt,lim	c.s.	Verifica
SLU 82	4.35	-2598	107	64.81		58164	0.3191	10833	484			4.52	Si
SLU 82	6.45	-1668	84	-22.6		37338	0.3191	10534	471			5.57	Si
SLU 40	4.35	-2263	108	62.09		50647	0.3191	10833	484			4.49	Si
SLU 40	6.45	-1368	86	-25.31		30625	0.3191	9639	431			5.01	Si
SLU 39	4.35	-2267	101	60.71		50747	0.3191	10833	484			4.78	Si
SLU 39	6.45	-1372	93	-26.78		30701	0.3191	9649	431			4.64	Si
SLU 34	4.35	-2170	98	56.77		48572	0.3191	10833	484			4.93	Si
SLU 34	6.45	-1380	68	-19.12		30884	0.3191	9673	432			6.34	Si
SLU 76	4.35	-2506	97	59.49		56088	0.3191	10833	484			4.96	Si
SLU 76	6.45	-1680	67	-16.41		37597	0.3191	10568	472			7.09	Si

Comb.	Quota	N	V par	M	σ0	σN	l'	fvd	Vt scorr.	Vt fess.diag.	Vt,lim	c.s.	Verifica
SLU 42	4.35	-2321	110	63.42		51956	0.3191	10833	484			4.41	Si
SLU 42	6.45	-1413	88	-25.77		31624	0.3191	9772	437			4.97	Si
SLU 81	4.35	-2603	101	63.43		58264	0.3191	10833	484			4.81	Si
SLU 81	6.45	-1671	91	-24.07		37413	0.3191	10544	471			5.16	Si
SLU 41	4.35	-2326	103	62.04		52056	0.3191	10833	484			4.68	Si
SLU 41	6.45	-1416	95	-27.25		31699	0.3191	9782	437			4.61	Si
SLU 84	4.35	-2657	109	66.14		59473	0.3191	10833	484			4.44	Si
SLU 84	6.45	-1713	86	-23.06		38336	0.3191	10667	477			5.52	Si
SLU 83	4.35	-2661	103	64.76		59573	0.3191	10833	484			4.71	Si
SLU 83	6.45	-1716	93	-24.53		38412	0.3191	10677	477			5.12	Si

Verifica a taglio nel piano secondo D.M. 17-01-18 (N.T.C.) §7.8.2.2.2 con rottura per scorrimento in combinazioni sismiche, γM = 2

Comb.	Quota	N	V par	M	σ0	σN	l'	fvd	Vt scorr.	Vt fess.diag.	Vt,lim	c.s.	Verifica
SLV 8	4.35	-5040	1200	393.47		147276	0.2444	16250	556			0.46	No, Vu<V
SLV 8	6.45	2279	957	-364.68		0	0	8333	0			0	No, Vu<V
SLV 2	4.35	509	-605	-200.54		0	0	8333	0			0	No, Vu<V
SLV 2	6.45	-1496	-7	37.48		33487	0.3191	15031	671			98.5	Si
SLV 5	4.35	2364	-1281	-398.14		0	0	8333	0			0	No, Vu<V
SLV 5	6.45	-4267	-755	317.35		119278	0.2555	16250	581			0.77	No, Vu<V
SLV 6	4.35	2364	-1281	-398.14		0	0	8333	0			0	No, Vu<V
SLV 6	6.45	-4267	-755	317.35		119278	0.2555	16250	581			0.77	No, Vu<V
SLV 3	4.35	-1712	139	36.94		38327	0.3191	15999	715			5.12	Si
SLV 3	6.45	468	507	-167.13		0	0	8333	0			0	No, Vu<V
SLV 4	4.35	-1712	139	36.94		38327	0.3191	15999	715			5.12	Si
SLV 4	6.45	468	507	-167.13		0	0	8333	0			0	No, Vu<V
SLV 1	4.35	509	-605	-200.54		0	0	8333	0			0	No, Vu<V
SLV 1	6.45	-1496	-7	37.48		33487	0.3191	15031	671			98.5	Si
SLV 10	4.35	1732	-1116	-330.02		0	0	8333	0			0	No, Vu<V
SLV 10	6.45	-4678	-884	352.64		132334	0.2525	16250	574			0.65	No, Vu<V
SLV 7	4.35	-5040	1200	393.47		147276	0.2444	16250	556			0.46	No, Vu<V
SLV 7	6.45	2279	957	-364.68		0	0	8333	0			0	No, Vu<V
SLV 9	4.35	1732	-1116	-330.02		0	0	8333	0			0	No, Vu<V
SLV 9	6.45	-4678	-884	352.64		132334	0.2525	16250	574			0.65	No, Vu<V

Verifica a pressoflessione fuori piano D.M. 17-01-18 (N.T.C.)

quota 6.125 Wa 0.03 denominatore 8 γM = 2

Comb.	fd	Sa	σ0	N	M	Mc	Coeff.s.	Verifica
SLV 3	143750	0.38	0	423	17.37	0	0	No, Trazione
SLV 4	143750	0.38	0	423	17.37	0	0	No, Trazione
SLV 8	143750	0.38	0	2241	17.37	0	0	No, Trazione
SLV 12	143750	0.38	0	1838	17.37	0	0	No, Trazione
SLV 7	143750	0.38	0	2241	17.37	0	0	No, Trazione
SLV 11	143750	0.38	0	1838	17.37	0	0	No, Trazione
SLV 9	143750	0.38	105125	-4696	17.37	45.91	2.64	Si
SLV 10	143750	0.38	105125	-4696	17.37	45.91	2.64	Si
SLV 16	143750	0.38	20563	-919	17.37	53.48	3.08	Si
SLV 15	143750	0.38	20563	-919	17.37	53.48	3.08	Si

Verifica dei meccanismi locali di collasso con analisi cinematica lineare

forza di aggancio al piano = 0 quota mezzeria = 6.125 Wa = 0.03 Ta = 0.1503

Comb.	N top	N base	V orto	α0	M*	e*	a0*	aLim	Verifica
SLV 10	183	1732	-8	0	0	0	0	16.27364	No, Trazione
SLV 5	718	2364	6	0	0	0	0	16.27364	No, Trazione
SLV 6	718	2364	6	0	0	0	0	16.27364	No, Trazione
SLV 9	183	1732	-8	0	0	0	0	16.27364	No, Trazione
SLV 2	232	509	23	0	0	0	0	16.27364	No, Trazione
SLV 4	-719	-1712	24	0	95.8	0.935	0	16.27364	No
SLV 1	232	509	23	0	0	0	0	16.27364	No, Trazione
SLV 3	-719	-1712	24	0	95.8	0.935	0	16.27364	No
SLV 14	-1551	-1596	-24	0.007	180.3	0.963	0.10786	16.27364	No
SLV 13	-1551	-1596	-24	0.007	180.3	0.963	0.10786	16.27364	No

Tabella dei coefficienti di sicurezza minimi

Stato limite	Coeff.s.	Comb.	Verifica
PF_SLU	1.73	SLU 84	Si
V_SLU	4.411	SLU 42	Si
PF_SLV	0	SLV 12	No
V_SLV	0	SLV 1	No
PFFP_SLV	0	SLV 12	No
R_SLV	0	SLV 10	No

Maschio 162

Verifiche condotte secondo D.M. 17-01-18 (N.T.C.)

Dati geometrici

X ini.	Y ini.	X fin.	Y fin.	Quota i.	Quota.s	l	Sp.	h netta	h ini.	h fin.	a	a.s.,sx	a.s.,dx
-5.158	2.165	-5.158	5.686	L4	L5	3.52	0.14	3.55	3.55	3.55			

Caratteristiche del materiale

(Circolare 7 21-01-19 C8.5.I) Muratura in mattoni pieni e malta di calce LC2_Corti

fb	fk	fvk0	fmedio	τ0	fv0	μ	ϕ	fv,lim	E	G	FC
600000			345000	9000	20000	0.58	0.77	32500	320000000	128000000	1.2

Verifica a pressoflessione nel piano secondo D.M. 17-01-18 NTC §7.8.2.2.1 in combinazioni non sismiche, γM = 3

Comb.	Quota	N	M	σ0	Mu	c.s.	Verifica
SLU 77	4.35	-21741	797.52	44112	17545.38	22	Si
SLU 77	6.45	-18831	-2032.03	38208	17599.57	8.661	Si
SLU 74	4.35	-21276	766.51	43168	17603.92	22.966	Si
SLU 74	6.45	-18325	-1980.6	37181	17533.15	8.852	Si
SLU 79	4.35	-21515	801.48	43654	17576.14	21.93	Si
SLU 79	6.45	-18611	-2012.28	37762	17573.46	8.733	Si
SLU 82	4.35	-21341	852.83	43300	17596.88	20.633	Si
SLU 82	6.45	-18297	-2050.22	37125	17528.89	8.55	Si
SLU 80	4.35	-21446	828.68	43513	17584.74	21.22	Si
SLU 80	6.45	-18561	-2001.07	37659	17566.85	8.779	Si
SLU 81	4.35	-21411	825.63	43441	17588.92	21.304	Si
SLU 81	6.45	-18348	-2061.43	37228	17536.68	8.507	Si
SLU 78	4.35	-21671	824.72	43971	17555.36	21.286	Si
SLU 78	6.45	-18781	-2020.82	38105	17593.93	8.706	Si
SLU 75	4.35	-21206	793.72	43026	17611.05	22.188	Si
SLU 75	6.45	-18274	-1969.4	37078	17525.26	8.899	Si
SLU 84	4.35	-21806	883.84	44244	17535.68	19.84	Si
SLU 84	6.45	-18804	-2101.65	38152	17596.53	8.373	Si
SLU 83	4.35	-21876	856.63	44385	17524.88	20.458	Si
SLU 83	6.45	-18854	-2112.86	38255	17602.06	8.331	Si

Verifica a pressoflessione nel piano secondo D.M. 17-01-18 NTC §7.8.2.2.1 in combinazioni sismiche, γM = 2

Comb.	Quota	N	M	σ0	Mu	c.s.	Verifica
SLV 10	4.35	-13930	-8782.15	28264	18848.34	2.146	Si
SLV 10	6.45	-6929	5060.95	14058	10792.72	2.133	Si
SLV 12	4.35	-14577	10990.95	29576	19447.75	1.769	Si
SLV 12	6.45	-18469	-9109.38	37474	22539.74	2.474	Si
SLV 15	4.35	-13865	5610.66	28131	18786.27	3.348	Si
SLV 15	6.45	-15376	-5998.84	31197	20154.77	3.36	Si
SLV 8	4.35	-14993	9670.7	30421	19820.81	2.05	Si
SLV 8	6.45	-17659	-7524.46	35829	21968.85	2.92	Si
SLV 7	4.35	-14993	9670.7	30421	19820.81	2.05	Si
SLV 7	6.45	-17659	-7524.46	35829	21968.85	2.92	Si
SLV 6	4.35	-14347	-10102.39	29109	19237.13	1.904	Si
SLV 6	6.45	-6118	6645.87	12413	9674.91	1.456	Si
SLV 9	4.35	-13930	-8782.15	28264	18848.34	2.146	Si
SLV 9	6.45	-6929	5060.95	14058	10792.72	2.133	Si
SLV 11	4.35	-14577	10990.95	29576	19447.75	1.769	Si
SLV 11	6.45	-18469	-9109.38	37474	22539.74	2.474	Si
SLV 5	4.35	-14347	-10102.39	29109	19237.13	1.904	Si
SLV 5	6.45	-6118	6645.87	12413	9674.91	1.456	Si
SLV 16	4.35	-13865	5610.66	28131	18786.27	3.348	Si
SLV 16	6.45	-15376	-5998.84	31197	20154.77	3.36	Si

Verifica a taglio nel piano secondo D.M. 17-01-18 (N.T.C.) §7.8.2.2.2 con rottura per scorrimento in combinazioni non sismiche, γM = 3

Comb.	Quota	N	V par	M	σ0	σN	I'	fvd	Vt scorr.	Vt fess.diag.	Vt,lim	c.s.	Verifica
SLU 77	4.35	-21741	1398	797.52		44112	3.5204	10833	5339			3.82	Si
SLU 77	6.45	-18831	948	-2032.03		38208	3.5204	10650	5249			5.54	Si
SLU 83	4.35	-21876	1373	856.63		44385	3.5204	10833	5339			3.89	Si
SLU 83	6.45	-18854	918	-2112.86		38255	3.5204	10656	5252			5.72	Si
SLU 74	4.35	-21276	1320	766.51		43168	3.5204	10833	5339			4.05	Si
SLU 74	6.45	-18325	878	-1980.6		37181	3.5204	10513	5181			5.9	Si
SLU 76	4.35	-20934	1353	815.81		42474	3.5204	10833	5339			3.95	Si
SLU 76	6.45	-18020	919	-1942.17		36563	3.5204	10431	5141			5.6	Si
SLU 75	4.35	-21206	1342	793.72		43026	3.5204	10833	5339			3.98	Si
SLU 75	6.45	-18274	904	-1969.4		37078	3.5204	10499	5175			5.73	Si
SLU 82	4.35	-21341	1317	852.83		43300	3.5204	10833	5339			4.05	Si
SLU 82	6.45	-18297	874	-2050.22		37125	3.5204	10506	5178			5.93	Si
SLU 80	4.35	-21446	1416	828.68		43513	3.5204	10833	5339			3.77	Si
SLU 80	6.45	-18561	972	-2001.07		37659	3.5204	10577	5213			5.37	Si
SLU 84	4.35	-21806	1395	883.84		44244	3.5204	10833	5339			3.83	Si
SLU 84	6.45	-18804	944	-2101.65		38152	3.5204	10643	5245			5.56	Si
SLU 79	4.35	-21515	1394	801.48		43654	3.5204	10833	5339			3.83	Si
SLU 79	6.45	-18611	945	-2012.28		37762	3.5204	10590	5220			5.52	Si
SLU 78	4.35	-21671	1420	824.72		43971	3.5204	10833	5339			3.76	Si
SLU 78	6.45	-18781	974	-2020.82		38105	3.5204	10636	5242			5.38	Si

Verifica a taglio nel piano secondo D.M. 17-01-18 (N.T.C.) §7.8.2.2.2 con rottura per scorrimento in combinazioni sismiche, γM = 2

Comb.	Quota	N	V par	M	σ0	σN	I'	fvd	Vt scorr.	Vt fess.diag.	Vt,lim	c.s.	Verifica
SLV 9	4.35	-13930	-10492	-8782.15		29357	3.3894	14205	6740			0.64	No, Vu<V
SLV 9	6.45	-6929	-10472	5060.95		16020	3.0893	11537	4990			0.48	No, Vu<V
SLV 6	4.35	-14347	-12998	-10102.39		32345	3.1682	14802	6566			0.51	No, Vu<V
SLV 6	6.45	-6118	-12884	6645.87		21614	2.0218	12656	3582			0.28	No, Vu<V
SLV 12	4.35	-14577	14710	10990.95		34492	3.0187	15232	6437			0.44	No, Vu<V
SLV 12	6.45	-18469	13979	-9109.38		37474	3.5204	15828	7801			0.56	No, Vu<V
SLV 16	4.35	-13865	8812	5610.66		28131	3.5204	13960	6880			0.78	No, Vu<V
SLV 16	6.45	-15376	8234	-5998.84		31197	3.5204	14573	7182			0.87	No, Vu<V
SLV 11	4.35	-14577	14710	10990.95		34492	3.0187	15232	6437			0.44	No, Vu<V
SLV 11	6.45	-18469	13979	-9109.38		37474	3.5204	15828	7801			0.56	No, Vu<V
SLV 10	4.35	-13930	-10492	-8782.15		29357	3.3894	14205	6740			0.64	No, Vu<V
SLV 10	6.45	-6929	-10472	5060.95		16020	3.0893	11537	4990			0.48	No, Vu<V
SLV 8	4.35	-14993	12204	9670.7		32010	3.3457	14735	6902			0.57	No, Vu<V
SLV 8	6.45	-17659	11568	-7524.46		35829	3.5204	15499	7639			0.66	No, Vu<V
SLV 15	4.35	-13865	8812	5610.66		28131	3.5204	13960	6880			0.78	No, Vu<V
SLV 15	6.45	-15376	8234	-5998.84		31197	3.5204	14573	7182			0.87	No, Vu<V
SLV 7	4.35	-14993	12204	9670.7		32010	3.3457	14735	6902			0.57	No, Vu<V
SLV 7	6.45	-17659	11568	-7524.46		35829	3.5204	15499	7639			0.66	No, Vu<V
SLV 5	4.35	-14347	-12998	-10102.39		32345	3.1682	14802	6566			0.51	No, Vu<V
SLV 5	6.45	-6118	-12884	6645.87		21614	2.0218	12656	3582			0.28	No, Vu<V

Verifica a pressoflessione fuori piano D.M. 17-01-18 (N.T.C.)

quota 6.125 Wa 0.03 denominatore 8 γM = 2

Comb.	fd	Sa	σ0	N	M	Mc	Coeff.s.	Verifica
SLV 6	143750	0.38	13138	-6475	191.59	404.53	2.11	Si
SLV 5	143750	0.38	13138	-6475	191.59	404.53	2.11	Si
SLV 10	143750	0.38	14780	-7285	191.59	448.24	2.34	Si
SLV 9	143750	0.38	14780	-7285	191.59	448.24	2.34	Si
SLV 2	143750	0.38	19358	-9541	191.59	562.06	2.93	Si
SLV 1	143750	0.38	19358	-9541	191.59	562.06	2.93	Si
SLV 13	143750	0.38	24832	-12239	191.59	682.6	3.56	Si
SLV 14	143750	0.38	24832	-12239	191.59	682.6	3.56	Si
SLV 3	143750	0.38	26332	-12978	191.59	712.69	3.72	Si
SLV 4	143750	0.38	26332	-12978	191.59	712.69	3.72	Si

Verifica dei meccanismi locali di collasso con analisi cinematica lineare

forza di aggancio al piano = 0 quota mezzeria = 6.125 Wa = 0.03 Ta = 0.1503

Comb.	N top	N base	V orto	α0	M*	e*	a0*	aLim	Verifica
SLV 15	-12717	-13865	-4	0.022	1541.7	0.953	0.32964	16.27364	No
SLV 16	-12717	-13865	-4	0.022	1541.7	0.953	0.32964	16.27364	No
SLV 12	-12926	-14577	3	0.022	1563	0.954	0.33024	16.27364	No
SLV 11	-12926	-14577	3	0.022	1563	0.954	0.33024	16.27364	No
SLV 7	-11569	-14993	6	0.022	1425.2	0.95	0.33114	16.27364	No
SLV 8	-11569	-14993	6	0.022	1425.2	0.95	0.33114	16.27364	No
SLV 14	-11181	-13671	-6	0.022	1385.8	0.949	0.33167	16.27364	No
SLV 13	-11181	-13671	-6	0.022	1385.8	0.949	0.33167	16.27364	No
SLV 4	-8194	-15253	6	0.022	1083.1	0.937	0.34525	16.27364	No
SLV 3	-8194	-15253	6	0.022	1083.1	0.937	0.34525	16.27364	No

Tabella dei coefficienti di sicurezza minimi

Stato limite	Coeff.s.	Comb.	Verifica
PF_SLU	8.331	SLU 83	Si
V_SLU	3.76	SLU 78	Si
PF_SLV	1.456	SLV 5	Si
V_SLV	0.278	SLV 5	No
PFFP_SLV	2.111	SLV 5	Si
R_SLV	0.02	SLV 15	No

Maschio 163

Verifiche condotte secondo D.M. 17-01-18 (N.T.C.)

Dati geometrici

X ini.	Y ini.	X fin.	Y fin.	Quota i.	Quota.s	l	Sp.	h netta	h ini.	h fin.	a	a.s.,sx	a.s.,dx
-5.105	5.83	-5.105	6.536	L4	L5	0.705	0.28	3.55	3.55	3.55			

Caratteristiche del materiale

(Circolare 7 21-01-19 C8.5.I) Muratura in mattoni pieni e malta di calce LC2_Corti

fb	fk	fvk0	fmedio	τ0	fv0	μ	ϕ	fv,lim	E	G	FC
600000			345000	9000	20000	0.58	0.77	32500	320000000	128000000	1.2

Verifica a pressoflessione nel piano secondo D.M. 17-01-18 NTC §7.8.2.2.1 in combinazioni non sismiche, γM = 3

Comb.	Quota	N	M	σ0	Mu	c.s.	Verifica
SLU 83	4.35	-9042	-232.9	45787	1396.42	5.996	Si
SLU 83	7.9	-5990	103.35	30332	1325.87	12.829	Si
SLU 77	4.35	-8989	-226.83	45516	1398.7	6.166	Si
SLU 77	7.9	-6062	98.64	30696	1332.23	13.506	Si
SLU 82	4.35	-8839	-226.61	44756	1404.42	6.197	Si
SLU 82	7.9	-5775	101.97	29240	1305.43	12.803	Si
SLU 81	4.35	-8843	-228.63	44780	1404.26	6.142	Si
SLU 81	7.9	-5781	101.99	29271	1306.04	12.806	Si
SLU 74	4.35	-8790	-222.55	44509	1406.07	6.318	Si
SLU 74	7.9	-5852	97.27	29635	1313.05	13.498	Si
SLU 78	4.35	-8984	-224.81	45492	1398.89	6.223	Si
SLU 78	7.9	-6056	98.61	30666	1331.7	13.504	Si
SLU 84	4.35	-9038	-230.88	45763	1396.62	6.049	Si
SLU 84	7.9	-5984	103.33	30302	1325.33	12.826	Si
SLU 75	4.35	-8785	-220.54	44485	1406.23	6.376	Si
SLU 75	7.9	-5846	97.25	29604	1312.47	13.496	Si
SLU 79	4.35	-8899	-224.99	45059	1402.26	6.232	Si
SLU 79	7.9	-5976	96.83	30262	1324.62	13.68	Si
SLU 80	4.35	-8894	-222.98	45036	1402.43	6.29	Si
SLU 80	7.9	-5970	96.81	30231	1324.06	13.678	Si

Verifica a pressoflessione nel piano secondo D.M. 17-01-18 NTC §7.8.2.2.1 in combinazioni sismiche, γM = 2

Comb.	Quota	N	M	σ0	Mu	c.s.	Verifica
SLV 13	4.35	-6015	-590.86	30456	1592.39	2.695	Si
SLV 13	7.9	-3778	391.17	19128	1123.62	2.872	Si
SLV 5	4.35	-2654	-179.53	13439	833.03	4.64	Si
SLV 5	7.9	-2461	467.55	12460	779.31	1.667	Si
SLV 9	4.35	-3225	-418.42	16329	985.23	2.355	Si
SLV 9	7.9	-2631	582.41	13325	826.79	1.42	Si
SLV 6	4.35	-2654	-179.53	13439	833.03	4.64	Si
SLV 6	7.9	-2461	467.55	12460	779.31	1.667	Si
SLV 15	4.35	-7835	-499.79	39675	1865.95	3.733	Si
SLV 15	7.9	-4589	112.38	23238	1310.62	11.662	Si
SLV 10	4.35	-3225	-418.42	16329	985.23	2.355	Si
SLV 10	7.9	-2631	582.41	13325	826.79	1.42	Si

Comb.	Quota	N	M	σ0	Mu	c.s.	Verifica
SLV 14	4.35	-6015	-590.86	30456	1592.39	2.695	Si
SLV 14	7.9	-3778	391.17	19128	1123.62	2.872	Si
SLV 7	4.35	-8723	124.05	44171	1964.21	15.834	Si
SLV 7	7.9	-5166	-461.75	26161	1431.89	3.101	Si
SLV 16	4.35	-7835	-499.79	39675	1865.95	3.733	Si
SLV 16	7.9	-4589	112.38	23238	1310.62	11.662	Si
SLV 8	4.35	-8723	124.05	44171	1964.21	15.834	Si
SLV 8	7.9	-5166	-461.75	26161	1431.89	3.101	Si

Verifica a taglio nel piano secondo D.M. 17-01-18 (N.T.C.) §7.8.2.2.2 con rottura per scorrimento in combinazioni non sismiche, γM = 3

Comb.	Quota	N	V par	M	σ0	σN	I'	fvd	Vt scorr.	Vt fess.diag.	Vt,lim	c.s.	Verifica
SLU 77	4.35	-8989	-1226	-226.83		45516	0.7053	10833	2139			1.75	Si
SLU 77	7.9	-6062	-599	98.64		30696	0.7053	9648	1905			3.18	Si
SLU 80	4.35	-8894	-1208	-222.98		45036	0.7053	10833	2139			1.77	Si
SLU 80	7.9	-5970	-587	96.81		30231	0.7053	9586	1893			3.22	Si
SLU 81	4.35	-8843	-1234	-228.63		44780	0.7053	10833	2139			1.73	Si
SLU 81	7.9	-5781	-615	101.99		29271	0.7053	9458	1868			3.04	Si
SLU 83	4.35	-9042	-1258	-232.9		45787	0.7053	10833	2139			1.7	Si
SLU 83	7.9	-5990	-626	103.35		30332	0.7053	9600	1896			3.03	Si
SLU 79	4.35	-8899	-1216	-224.99		45059	0.7053	10833	2139			1.76	Si
SLU 79	7.9	-5976	-590	96.83		30262	0.7053	9590	1894			3.21	Si
SLU 84	4.35	-9038	-1251	-230.88		45763	0.7053	10833	2139			1.71	Si
SLU 84	7.9	-5984	-624	103.33		30302	0.7053	9596	1895			3.04	Si
SLU 75	4.35	-8785	-1194	-220.54		44485	0.7053	10833	2139			1.79	Si
SLU 75	7.9	-5846	-586	97.25		29604	0.7053	9503	1877			3.2	Si
SLU 74	4.35	-8790	-1201	-222.55		44509	0.7053	10833	2139			1.78	Si
SLU 74	7.9	-5852	-588	97.27		29635	0.7053	9507	1877			3.19	Si
SLU 82	4.35	-8839	-1226	-226.61		44756	0.7053	10833	2139			1.74	Si
SLU 82	7.9	-5775	-613	101.97		29240	0.7053	9454	1867			3.05	Si
SLU 78	4.35	-8984	-1218	-224.81		45492	0.7053	10833	2139			1.76	Si
SLU 78	7.9	-6056	-596	98.61		30666	0.7053	9644	1905			3.19	Si

Verifica a taglio nel piano secondo D.M. 17-01-18 (N.T.C.) §7.8.2.2.2 con rottura per scorrimento in combinazioni sismiche, γM = 2

Comb.	Quota	N	V par	M	σ0	σN	I'	fvd	Vt scorr.	Vt fess.diag.	Vt,lim	c.s.	Verifica
SLV 9	4.35	-3225	-3129	-418.42		17223	0.6687	11778	2205			0.7	No, Vu<V
SLV 9	7.9	-2631	-2198	582.41		23854	0.394	13104	1446			0.66	No, Vu<V
SLV 3	4.35	-5933	1795	296.5		30044	0.7053	14342	2832			1.58	Si
SLV 3	7.9	-4020	1446	-270.51		20358	0.7053	12405	2450			1.69	Si
SLV 6	4.35	-2654	-1886	-179.53		13439	0.7053	11021	2177			1.15	Si
SLV 6	7.9	-2461	-1367	467.55		18010	0.488	11935	1631			1.19	Si
SLV 16	4.35	-7835	-2348	-499.79		39675	0.7053	16250	3209			1.37	Si
SLV 16	7.9	-4589	-1325	112.38		23238	0.7053	12981	2564			1.93	Si
SLV 10	4.35	-3225	-3129	-418.42		17223	0.6687	11778	2205			0.7	No, Vu<V
SLV 10	7.9	-2631	-2198	582.41		23854	0.394	13104	1446			0.66	No, Vu<V
SLV 5	4.35	-2654	-1886	-179.53		13439	0.7053	11021	2177			1.15	Si
SLV 5	7.9	-2461	-1367	467.55		18010	0.488	11935	1631			1.19	Si
SLV 15	4.35	-7835	-2348	-499.79		39675	0.7053	16250	3209			1.37	Si
SLV 15	7.9	-4589	-1325	112.38		23238	0.7053	12981	2564			1.93	Si
SLV 14	4.35	-6015	-3377	-590.86		30456	0.7053	14424	2849			0.84	No, Vu<V
SLV 14	7.9	-3778	-2176	391.17		19128	0.7053	12159	2401			1.1	Si
SLV 13	4.35	-6015	-3377	-590.86		30456	0.7053	14424	2849			0.84	No, Vu<V
SLV 13	7.9	-3778	-2176	391.17		19128	0.7053	12159	2401			1.1	Si
SLV 4	4.35	-5933	1795	296.5		30044	0.7053	14342	2832			1.58	Si
SLV 4	7.9	-4020	1446	-270.51		20358	0.7053	12405	2450			1.69	Si

Verifica a pressoflessione fuori piano D.M. 17-01-18 (N.T.C.)

quota 6.125 Wa 0.05 denominatore 8 γM = 2

Comb.	fd	Sa	σ0	N	M	Mc	Coeff.s.	Verifica
SLV 6	143750	0.38	11692	-2309	73.43	292.33	3.98	Si
SLV 5	143750	0.38	11692	-2309	73.43	292.33	3.98	Si
SLV 10	143750	0.38	13721	-2710	73.43	336.75	4.59	Si
SLV 9	143750	0.38	13721	-2710	73.43	336.75	4.59	Si
SLV 2	143750	0.38	16873	-3332	73.43	402.09	5.48	Si
SLV 1	143750	0.38	16873	-3332	73.43	402.09	5.48	Si
SLV 3	143750	0.38	23343	-4610	73.43	522.1	7.11	Si
SLV 4	143750	0.38	23343	-4610	73.43	522.1	7.11	Si
SLV 13	143750	0.38	23636	-4668	73.43	527.08	7.18	Si
SLV 14	143750	0.38	23636	-4668	73.43	527.08	7.18	Si

Verifica dei meccanismi locali di collasso con analisi cinematica lineare

forza di aggancio al piano = 0 quota mezzeria = 6.125 Wa = 0.05 Ta = 0.0752

Comb.	N top	N base	V orto	α0	M*	e*	a0*	aLim	Verifica
SLV 15	-4589	-7835	-1	0.044	566.4	0.95	0.67384	11.26714	No
SLV 16	-4589	-7835	-1	0.044	566.4	0.95	0.67384	11.26714	No
SLV 3	-4020	-5933	-1	0.045	508.6	0.945	0.68577	11.26714	No
SLV 4	-4020	-5933	-1	0.045	508.6	0.945	0.68577	11.26714	No
SLV 14	-3778	-6015	0	0.045	484	0.942	0.69479	11.26714	No
SLV 13	-3778	-6015	0	0.045	484	0.942	0.69479	11.26714	No
SLV 2	-3209	-4113	0	0.046	426.4	0.936	0.71222	11.26714	No
SLV 1	-3209	-4113	0	0.046	426.4	0.936	0.71222	11.26714	No
SLV 12	-5337	-9294	-2	0.043	642.3	0.955	0.65901	9.97238	No
SLV 11	-5337	-9294	-2	0.043	642.3	0.955	0.65901	9.97238	No

Tabella dei coefficienti di sicurezza minimi

Stato limite	Coeff.s.	Comb.	Verifica
PF_SLU	5.996	SLU 83	Si
V_SLU	1.7	SLU 83	Si
PF_SLV	1.42	SLV 9	Si
V_SLV	0.658	SLV 9	No

Stato limite	Coeff.s.	Comb.	Verifica
PFFP_SLV	3.981	SLV 5	Si
R_SLV	0.06	SLV 15	No

Maschio 164

Verifiche condotte secondo D.M. 17-01-18 (N.T.C.)

Dati geometrici

X ini.	Y ini.	X fin.	Y fin.	Quota i.	Quota.s	l	Sp.	h netta	h ini.	h fin.	a	a.s.,sx	a.s.,dx
-5.954	-3.248	-6.464	-3.248	L4	L5	0.51	0.28	3.55	3.55	3.55			

Caratteristiche del materiale

(Circolare 7 21-01-19 C8.5.I) Muratura in mattoni pieni e malta di calce LC2_Corti

fb	fk	fvk0	fmedio	τ0	fv0	μ	ϕ	fv,lim	E	G	FC
600000			345000	9000	20000	0.58	0.77	32500	320000000	128000000	1.2

Verifica a pressoflessione nel piano secondo D.M. 17-01-18 NTC §7.8.2.2.1 in combinazioni non sismiche, γM = 3

Comb.	Quota	N	M	σ0	Mu	c.s.	Verifica
SLU 78	6.35	-8375	-238.8	58645	598.08	2.505	Si
SLU 78	7.15	-8547	53.36	59852	578.09	10.834	Si
SLU 82	6.35	-8314	-236.92	58222	604.77	2.553	Si
SLU 82	7.15	-8508	58.35	59582	582.67	9.987	Si
SLU 68	6.35	-7494	-255.83	52478	679.86	2.657	Si
SLU 68	7.15	-7438	84.95	52089	683.87	8.05	Si
SLU 55	6.35	-7536	-258	52772	676.73	2.623	Si
SLU 55	7.15	-7509	91.4	52581	678.77	7.426	Si
SLU 73	6.35	-8092	-266.71	56667	628.01	2.355	Si
SLU 73	7.15	-8131	89.01	56941	624.07	7.011	Si
SLU 84	6.35	-8463	-240.53	59267	587.95	2.444	Si
SLU 84	7.15	-8667	57.97	60691	563.43	9.72	Si
SLU 75	6.35	-8225	-235.19	57600	614.33	2.612	Si
SLU 75	7.15	-8389	53.73	58743	596.5	11.101	Si
SLU 76	6.35	-8241	-270.31	57712	612.64	2.266	Si
SLU 76	7.15	-8290	88.64	58051	607.44	6.853	Si
SLU 52	6.35	-7387	-254.4	51728	687.49	2.702	Si
SLU 52	7.15	-7350	91.78	51472	689.97	7.518	Si
SLU 80	6.35	-8292	-237.93	58068	607.17	2.552	Si
SLU 80	7.15	-8460	56.01	59246	588.29	10.503	Si

Verifica a pressoflessione nel piano secondo D.M. 17-01-18 NTC §7.8.2.2.1 in combinazioni sismiche, γM = 2

Comb.	Quota	N	M	σ0	Mu	c.s.	Verifica
SLV 7	6.35	-2617	290.22	18324	567.18	1.954	Si
SLV 7	7.15	-3862	-264.51	27044	766.82	2.899	Si
SLV 4	6.35	-2278	619.85	0	0	0	No, e>l/2
SLV 4	7.15	-2896	-990.01	0	0	0	No, e>l/2
SLV 15	6.35	-7488	-745.32	52434	1090	1.462	Si
SLV 15	7.15	-7839	1019.55	54897	1100.9	1.08	Si
SLV 13	6.35	-8760	-872.33	61347	1112.33	1.275	Si
SLV 13	7.15	-8494	1000.56	59485	1111.58	1.111	Si
SLV 2	6.35	-3551	492.84	24866	721.21	1.463	Si
SLV 2	7.15	-3551	-1009	0	0	0	No, e>l/2
SLV 14	6.35	-8760	-872.33	61347	1112.33	1.275	Si
SLV 14	7.15	-8494	1000.56	59485	1111.58	1.111	Si
SLV 1	6.35	-3551	492.84	24866	721.21	1.463	Si
SLV 1	7.15	-3551	-1009	0	0	0	No, e>l/2
SLV 8	6.35	-2617	290.22	18324	567.18	1.954	Si
SLV 8	7.15	-3862	-264.51	27044	766.82	2.899	Si
SLV 3	6.35	-2278	619.85	0	0	0	No, e>l/2
SLV 3	7.15	-2896	-990.01	0	0	0	No, e>l/2
SLV 16	6.35	-7488	-745.32	52434	1090	1.462	Si
SLV 16	7.15	-7839	1019.55	54897	1100.9	1.08	Si

Verifica a taglio nel piano secondo D.M. 17-01-18 (N.T.C.) §7.8.2.2.2 con rottura per scorrimento in combinazioni non sismiche, γM = 3

Comb.	Quota	N	V par	M	σ0	σN	l'	fvd	Vt scorr.	Vt fess.diag.	Vt,lim	c.s.	Verifica
SLU 76	6.35	-8241	-422	-270.31		57712	0.51	10833	1547			3.66	Si
SLU 76	7.15	-8290	-426	88.64		58051	0.51	10833	1547			3.63	Si
SLU 52	6.35	-7387	-413	-254.4		51728	0.51	10833	1547			3.75	Si
SLU 52	7.15	-7350	-417	91.78		51472	0.51	10833	1547			3.71	Si
SLU 44	6.35	-6639	-398	-239.92		46494	0.51	10833	1547			3.89	Si
SLU 44	7.15	-6499	-402	88.09		45511	0.51	10833	1547			3.85	Si
SLU 47	6.35	-6789	-401	-243.52		47538	0.51	10833	1547			3.86	Si
SLU 47	7.15	-6657	-405	87.71		46620	0.51	10833	1547			3.82	Si
SLU 31	6.35	-6803	-382	-235.35		47638	0.51	10833	1547			4.05	Si
SLU 31	7.15	-6830	-386	86.56		47832	0.51	10833	1547			4	Si
SLU 68	6.35	-7494	-407	-255.83		52478	0.51	10833	1547			3.8	Si
SLU 68	7.15	-7438	-411	84.95		52089	0.51	10833	1547			3.76	Si
SLU 73	6.35	-8092	-419	-266.71		56667	0.51	10833	1547			3.69	Si
SLU 73	7.15	-8131	-423	89.01		56941	0.51	10833	1547			3.66	Si
SLU 55	6.35	-7536	-416	-258		52772	0.51	10833	1547			3.72	Si
SLU 55	7.15	-7509	-420	91.4		52581	0.51	10833	1547			3.68	Si
SLU 34	6.35	-6952	-386	-238.96		48682	0.51	10833	1547			4.01	Si
SLU 34	7.15	-6989	-390	86.19		48941	0.51	10833	1547			3.97	Si
SLU 65	6.35	-7345	-404	-252.23		51433	0.51	10833	1547			3.83	Si
SLU 65	7.15	-7280	-408	85.33		50980	0.51	10833	1547			3.79	Si

Verifica a taglio nel piano secondo D.M. 17-01-18 (N.T.C.) §7.8.2.2.2 con rottura per scorrimento in combinazioni sismiche, γM = 2

Comb.	Quota	N	V par	M	σ0	σN	I'	fvd	Vt scorr.	Vt fess.diag.	Vt,lim	c.s.	Verifica
SLV 2	6.35	-3551	1960	492.84		36377	0.3486	15609	1524			0.78	No, Vu<V
SLV 2	7.15	-3551	1897	-1009		0	0	8333	0			0	No, Vu<V
SLV 14	6.35	-8760	-2558	-872.33		67100	0.4663	16250	2122			0.83	No, Vu<V
SLV 14	7.15	-8494	-2298	1000.56		73700	0.4116	16250	1873			0.82	No, Vu<V
SLV 7	6.35	-2617	1087	290.22		21619	0.4323	12657	1532			1.41	Si
SLV 7	7.15	-3862	709	-264.51		27044	0.51	13742	1962			2.77	Si
SLV 16	6.35	-7488	-2231	-745.32		57338	0.4664	16250	2122			0.95	No, Vu<V
SLV 16	7.15	-7839	-2168	1019.55		74693	0.3748	16250	1706			0.79	No, Vu<V
SLV 13	6.35	-8760	-2558	-872.33		67100	0.4663	16250	2122			0.83	No, Vu<V
SLV 13	7.15	-8494	-2298	1000.56		73700	0.4116	16250	1873			0.82	No, Vu<V
SLV 3	6.35	-2278	2287	619.85		0	0	8333	0			0	No, Vu<V
SLV 3	7.15	-2896	2026	-990.01		0	0	8333	0			0	No, Vu<V
SLV 8	6.35	-2617	1087	290.22		21619	0.4323	12657	1532			1.41	Si
SLV 8	7.15	-3862	709	-264.51		27044	0.51	13742	1962			2.77	Si
SLV 1	6.35	-3551	1960	492.84		36377	0.3486	15609	1524			0.78	No, Vu<V
SLV 1	7.15	-3551	1897	-1009		0	0	8333	0			0	No, Vu<V
SLV 4	6.35	-2278	2287	619.85		0	0	8333	0			0	No, Vu<V
SLV 4	7.15	-2896	2026	-990.01		0	0	8333	0			0	No, Vu<V
SLV 15	6.35	-7488	-2231	-745.32		57338	0.4664	16250	2122			0.95	No, Vu<V
SLV 15	7.15	-7839	-2168	1019.55		74693	0.3748	16250	1706			0.79	No, Vu<V

Verifica a pressoflessione fuori piano D.M. 17-01-18 (N.T.C.)

quota 6.125 Wa 0.05 denominatore 8 γM = 2

Comb.	fd	Sa	σ0	N	M	Mc	Coeff.s.	Verifica
SLV 8	143750	0.38	14156	-2022	51.89	250.23	4.82	Si
SLV 7	143750	0.38	14156	-2022	51.89	250.23	4.82	Si
SLV 12	143750	0.38	18215	-2601	51.89	309.87	5.97	Si
SLV 11	143750	0.38	18215	-2601	51.89	309.87	5.97	Si
SLV 4	143750	0.38	18422	-2631	51.89	312.77	6.03	Si
SLV 3	143750	0.38	18422	-2631	51.89	312.77	6.03	Si
SLV 1	143750	0.38	26137	-3732	51.89	410.76	7.92	Si
SLV 2	143750	0.38	26137	-3732	51.89	410.76	7.92	Si
SLV 16	143750	0.38	31951	-4563	51.89	471.74	9.09	Si
SLV 15	143750	0.38	31951	-4563	51.89	471.74	9.09	Si

Verifica dei meccanismi locali di collasso con analisi cinematica lineare

forza di aggancio al piano = 0 quota mezzeria = 6.125 Wa = 0.05 Ta = 0.0752

Comb.	N top	N base	V orto	α0	M*	e*	a0*	aLim	Verifica
SLV 3	-1235	-3009	83	0.001	199.2	0.91	0.01779	11.26714	No
SLV 4	-1235	-3009	83	0.001	199.2	0.91	0.01779	11.26714	No
SLV 2	-1431	-4031	87	0.003	218.8	0.916	0.04268	11.26714	No
SLV 1	-1431	-4031	87	0.003	218.8	0.916	0.04268	11.26714	No
SLV 15	-3459	-2975	-92	0.021	423.8	0.951	0.31567	11.26714	No
SLV 16	-3459	-2975	-92	0.021	423.8	0.951	0.31567	11.26714	No
SLV 14	-3655	-3997	-87	0.023	443.7	0.953	0.34554	11.26714	No
SLV 13	-3655	-3997	-87	0.023	443.7	0.953	0.34554	11.26714	No
SLV 12	-2451	-1796	-36	0.033	321.6	0.938	0.51613	9.97238	No
SLV 11	-2451	-1796	-36	0.033	321.6	0.938	0.51613	9.97238	No

Tabella dei coefficienti di sicurezza minimi

Stato limite	Coeff.s.	Comb.	Verifica
PF_SLU	2.266	SLU 76	Si
V_SLU	3.628	SLU 76	Si
PF_SLV	0	SLV 1	No
V_SLV	0	SLV 1	No
PFFP_SLV	4.822	SLV 7	Si
R_SLV	0.002	SLV 3	No

Maschio 165

Verifiche condotte secondo D.M. 17-01-18 (N.T.C.)

Dati geometrici

X ini.	Y ini.	X fin.	Y fin.	Quota i.	Quota.s	l	Sp.	h netta	h ini.	h fin.	a	a.s.,sx	a.s.,dx
-3.223	-3.248	-5.454	-3.248	L4	L5	2.231	0.28	3.55	3.55	3.55			

Caratteristiche del materiale

(Circolare 7 21-01-19 C8.5.I) Muratura in mattoni pieni e malta di calce LC2_Corti

fb	fk	fvk0	fmedio	τ0	fv0	μ	ϕ	fv,lim	E	G	FC
600000			345000	9000	20000	0.58	0.77	32500	320000000	128000000	1.2

Verifica a pressoflessione nel piano secondo D.M. 17-01-18 NTC §7.8.2.2.1 in combinazioni non sismiche, γM = 3

Comb.	Quota	N	M	σ0	Mu	c.s.	Verifica
SLU 58	6.35	-23502	1598.02	37629	14103.6	8.826	Si
SLU 58	7.15	-22377	227.21	35828	13980.43	61.53	Si
SLU 60	6.35	-23449	1628.69	37544	14099.04	8.657	Si
SLU 60	7.15	-22324	237.49	35744	13973.26	58.838	Si
SLU 69	6.35	-23759	1602.68	38041	14124.01	8.813	Si
SLU 69	7.15	-22622	221.87	36219	14011.88	63.154	Si
SLU 62	6.35	-23972	1650.96	38382	14138.71	8.564	Si
SLU 62	7.15	-22848	240.51	36582	14038.74	58.371	Si
SLU 79	6.35	-25781	1759	41278	14183.24	8.063	Si
SLU 79	7.15	-24643	253.76	39456	14171.95	55.847	Si
SLU 83	6.35	-26252	1811.93	42031	14171.32	7.821	Si
SLU 83	7.15	-25114	267.06	40210	14183.51	53.11	Si

Comb.	Quota	N	M	σ0	Mu	c.s.	Verifica
SLU 81	6.35	-25728	1789.67	41193	14183.98	7.925	Si
SLU 81	7.15	-24590	264.04	39371	14170.04	53.667	Si
SLU 77	6.35	-26080	1778.15	41756	14176.8	7.973	Si
SLU 77	7.15	-24942	259.93	39934	14180.41	54.554	Si
SLU 74	6.35	-25556	1755.89	40917	14185.51	8.079	Si
SLU 74	7.15	-24418	256.91	39096	14163	55.127	Si
SLU 56	6.35	-23800	1617.18	38107	14127	8.736	Si
SLU 56	7.15	-22676	233.38	36307	14018.55	60.067	Si

Verifica a pressoflessione nel piano secondo D.M. 17-01-18 NTC §7.8.2.2.1 in combinazioni sismiche, γM = 2

Comb.	Quota	N	M	σ0	Mu	c.s.	Verifica
SLV 14	6.35	-20650	-1304.45	33063	16799.4	12.879	Si
SLV 14	7.15	-19730	5029.55	31589	16315.97	3.244	Si
SLV 4	6.35	-14156	3701.65	22664	12859.37	3.474	Si
SLV 4	7.15	-13332	-4696.92	21345	12271.39	2.613	Si
SLV 2	6.35	-18701	3439.96	29943	15746.55	4.578	Si
SLV 2	7.15	-17859	-4434.3	28594	15257.25	3.441	Si
SLV 8	6.35	-9534	2346.43	15265	9305.09	3.966	Si
SLV 8	7.15	-8704	-1690.95	13936	8600.51	5.086	Si
SLV 1	6.35	-18701	3439.96	29943	15746.55	4.578	Si
SLV 1	7.15	-17859	-4434.3	28594	15257.25	3.441	Si
SLV 16	6.35	-16105	-1042.75	25785	14171.19	13.59	Si
SLV 16	7.15	-15202	4766.94	24340	13577.68	2.848	Si
SLV 7	6.35	-9534	2346.43	15265	9305.09	3.966	Si
SLV 7	7.15	-8704	-1690.95	13936	8600.51	5.086	Si
SLV 3	6.35	-14156	3701.65	22664	12859.37	3.474	Si
SLV 3	7.15	-13332	-4696.92	21345	12271.39	2.613	Si
SLV 13	6.35	-20650	-1304.45	33063	16799.4	12.879	Si
SLV 13	7.15	-19730	5029.55	31589	16315.97	3.244	Si
SLV 15	6.35	-16105	-1042.75	25785	14171.19	13.59	Si
SLV 15	7.15	-15202	4766.94	24340	13577.68	2.848	Si

Verifica a taglio nel piano secondo D.M. 17-01-18 (N.T.C.) §7.8.2.2.2 con rottura per scorrimento in combinazioni non sismiche, γM = 3

Comb.	Quota	N	V par	M	σ0	σN	l'	fvd	Vt scorr.	Vt fess.diag.	Vt,lim	c.s.	Verifica
SLU 74	6.35	-25556	1866	1755.89		40917	2.2306	10833	6766			3.63	Si
SLU 74	7.15	-24418	1866	256.91		39096	2.2306	10768	6726			3.6	Si
SLU 79	6.35	-25781	1874	1759		41278	2.2306	10833	6766			3.61	Si
SLU 79	7.15	-24643	1874	253.76		39456	2.2306	10816	6756			3.6	Si
SLU 69	6.35	-23759	1719	1602.68		38041	2.2306	10628	6638			3.86	Si
SLU 69	7.15	-22622	1719	221.87		36219	2.2306	10385	6486			3.77	Si
SLU 60	6.35	-23449	1731	1628.69		37544	2.2306	10561	6596			3.81	Si
SLU 60	7.15	-22324	1731	237.49		35744	2.2306	10321	6446			3.72	Si
SLU 83	6.35	-26252	1924	1811.93		42031	2.2306	10833	6766			3.52	Si
SLU 83	7.15	-25114	1924	267.06		40210	2.2306	10833	6766			3.52	Si
SLU 53	6.35	-23277	1697	1594.91		37268	2.2306	10525	6573			3.87	Si
SLU 53	7.15	-22152	1697	230.36		35468	2.2306	10285	6424			3.78	Si
SLU 81	6.35	-25728	1900	1789.67		41193	2.2306	10833	6766			3.56	Si
SLU 81	7.15	-24590	1900	264.04		39371	2.2306	10805	6749			3.55	Si
SLU 62	6.35	-23972	1755	1650.96		38382	2.2306	10673	6666			3.8	Si
SLU 62	7.15	-22848	1755	240.51		36582	2.2306	10433	6516			3.71	Si
SLU 77	6.35	-26080	1890	1778.15		41756	2.2306	10833	6766			3.58	Si
SLU 77	7.15	-24942	1890	259.93		39934	2.2306	10833	6766			3.58	Si
SLU 56	6.35	-23800	1721	1617.18		38107	2.2306	10636	6643			3.86	Si
SLU 56	7.15	-22676	1721	233.38		36307	2.2306	10396	6493			3.77	Si

Verifica a taglio nel piano secondo D.M. 17-01-18 (N.T.C.) §7.8.2.2.2 con rottura per scorrimento in combinazioni sismiche, γM = 2

Comb.	Quota	N	V par	M	σ0	σN	l'	fvd	Vt scorr.	Vt fess.diag.	Vt,lim	c.s.	Verifica
SLV 1	6.35	-18701	9443	3439.96		29943	2.2306	14322	8945			0.95	No, Vu<V
SLV 1	7.15	-17859	9564	-4434.3		28594	2.2306	14052	8777			0.92	No, Vu<V
SLV 16	6.35	-16105	-6875	-1042.75		25785	2.2306	13490	8426			1.23	Si
SLV 16	7.15	-15202	-6995	4766.94		24340	2.2306	13201	8245			1.18	Si
SLV 3	6.35	-14156	10782	3701.65		22664	2.2306	12866	8036			0.75	No, Vu<V
SLV 3	7.15	-13332	10553	-4696.92		21345	2.2306	12602	7871			0.75	No, Vu<V
SLV 15	6.35	-16105	-6875	-1042.75		25785	2.2306	13490	8426			1.23	Si
SLV 15	7.15	-15202	-6995	4766.94		24340	2.2306	13201	8245			1.18	Si
SLV 8	6.35	-9534	6165	2346.43		15265	2.2306	11386	7112			1.15	Si
SLV 8	7.15	-8704	5565	-1690.95		13936	2.2306	11121	6946			1.25	Si
SLV 7	6.35	-9534	6165	2346.43		15265	2.2306	11386	7112			1.15	Si
SLV 7	7.15	-8704	5565	-1690.95		13936	2.2306	11121	6946			1.25	Si
SLV 4	6.35	-14156	10782	3701.65		22664	2.2306	12866	8036			0.75	No, Vu<V
SLV 4	7.15	-13332	10553	-4696.92		21345	2.2306	12602	7871			0.75	No, Vu<V
SLV 13	6.35	-20650	-8213	-1304.45		33063	2.2306	14946	9335			1.14	Si
SLV 13	7.15	-19730	-7984	5029.55		31589	2.2306	14651	9151			1.15	Si
SLV 2	6.35	-18701	9443	3439.96		29943	2.2306	14322	8945			0.95	No, Vu<V
SLV 2	7.15	-17859	9564	-4434.3		28594	2.2306	14052	8777			0.92	No, Vu<V
SLV 14	6.35	-20650	-8213	-1304.45		33063	2.2306	14946	9335			1.14	Si
SLV 14	7.15	-19730	-7984	5029.55		31589	2.2306	14651	9151			1.15	Si

Verifica a pressoflessione fuori piano D.M. 17-01-18 (N.T.C.)

quota 6.125 Wa 0.05 denominatore 8 γM = 2

Comb.	fd	Sa	σ0	N	M	Mc	Coeff.s.	Verifica
SLV 7	143750	0.38	13308	-8312	226.95	1036.93	4.57	Si
SLV 8	143750	0.38	13308	-8312	226.95	1036.93	4.57	Si
SLV 11	143750	0.38	15581	-9732	226.95	1188.7	5.24	Si
SLV 12	143750	0.38	15581	-9732	226.95	1188.7	5.24	Si
SLV 4	143750	0.38	18868	-11784	226.95	1395.03	6.15	Si
SLV 3	143750	0.38	18868	-11784	226.95	1395.03	6.15	Si
SLV 1	143750	0.38	25906	-16180	226.95	1784.96	7.86	Si
SLV 2	143750	0.38	25906	-16180	226.95	1784.96	7.86	Si
SLV 16	143750	0.38	26445	-16517	226.95	1811.89	7.98	Si

Comb.	fd	Sa	σ0	N	M	Mc	Coeff.s.	Verifica
SLV 15	143750	0.38	26445	-16517	226.95	1811.89	7.98	Si

Verifica dei meccanismi locali di collasso con analisi cinematica lineare

forza di aggancio al piano = 0 quota mezzeria = 6.125 Wa = 0.05 Ta = 0.0752

Comb.	N top	N base	V orto	α0	M*	e*	a0*	aLim	Verifica
SLV 7	-7367	-6258	-139	0.033	1068.2	0.923	0.52047	9.97238	No
SLV 8	-7367	-6258	-139	0.033	1068.2	0.923	0.52047	9.97238	No
SLV 13	-15824	-22229	75	0.04	1924.2	0.953	0.6045	11.26714	No
SLV 14	-15824	-22229	75	0.04	1924.2	0.953	0.6045	11.26714	No
SLV 3	-10234	-9900	-82	0.039	1357.4	0.936	0.60824	11.26714	No
SLV 4	-10234	-9900	-82	0.039	1357.4	0.936	0.60824	11.26714	No
SLV 9	-18691	-25871	132	0.037	2215.5	0.958	0.55899	9.97238	No
SLV 10	-18691	-25871	132	0.037	2215.5	0.958	0.55899	9.97238	No
SLV 12	-8090	-8383	-114	0.036	1141	0.926	0.56449	9.97238	No
SLV 11	-8090	-8383	-114	0.036	1141	0.926	0.56449	9.97238	No

Tabella dei coefficienti di sicurezza minimi

Stato limite	Coeff.s.	Comb.	Verifica
PF_SLU	7.821	SLU 83	Si
V_SLU	3.517	SLU 83	Si
PF_SLV	2.613	SLV 3	Si
V_SLV	0.745	SLV 3	No
PFFP_SLV	4.569	SLV 7	Si
R_SLV	0.052	SLV 7	No

Maschio 166

Verifiche condotte secondo D.M. 17-01-18 (N.T.C.)

Dati geometrici

X ini.	Y ini.	X fin.	Y fin.	Quota i.	Quota.s	l	Sp.	h netta	h ini.	h fin.	a	a.s.,sx	a.s.,dx
-0.134	-3.248	-2.223	-3.248	L4	L5	2.089	0.28	3.55	3.55	3.55			

Caratteristiche del materiale

(Circolare 7 21-01-19 C8.5.I) Muratura in mattoni pieni e malta di calce LC2_Corti

fb	fk	fvk0	fmedio	τ0	fv0	μ	ϕ	fv,lim	E	G	FC
600000			345000	9000	20000	0.58	0.77	32500	320000000	128000000	1.2

Verifica a pressoflessione nel piano secondo D.M. 17-01-18 NTC §7.8.2.2.1 in combinazioni non sismiche, γM = 3

Comb.	Quota	N	M	σ0	Mu	c.s.	Verifica
SLU 68	5.25	-19881	2260.52	33985	12103.97	5.355	Si
SLU 68	7.15	-16482	1089.89	28175	11262.78	10.334	Si
SLU 47	5.25	-18287	2192.29	31260	11772.49	5.37	Si
SLU 47	7.15	-14781	908.09	25267	10651.6	11.73	Si
SLU 55	5.25	-19810	2245.35	33862	12091.48	5.385	Si
SLU 55	7.15	-16497	1125	28199	11267.43	10.016	Si
SLU 76	5.25	-21404	2313.57	36587	12316.54	5.324	Si
SLU 76	7.15	-18198	1306.8	31107	11750.67	8.992	Si
SLU 44	5.25	-17871	2164.6	30549	11667.78	5.39	Si
SLU 44	7.15	-14356	886.57	24540	10479.01	11.82	Si
SLU 2	5.25	-14510	1846.17	24803	10542.36	5.71	Si
SLU 2	7.15	-11680	749.06	19967	9211.12	12.297	Si
SLU 52	5.25	-19394	2217.65	33152	12014.51	5.418	Si
SLU 52	7.15	-16072	1103.48	27473	11126.82	10.083	Si
SLU 65	5.25	-19466	2232.82	33274	12028.3	5.387	Si
SLU 65	7.15	-16057	1068.37	27448	11121.9	10.41	Si
SLU 73	5.25	-20988	2285.87	35877	12268.61	5.367	Si
SLU 73	7.15	-17773	1285.28	30380	11641.77	9.058	Si
SLU 5	5.25	-14925	1873.87	25513	10708.32	5.715	Si
SLU 5	7.15	-12106	770.58	20693	9433.59	12.242	Si

Verifica a pressoflessione nel piano secondo D.M. 17-01-18 NTC §7.8.2.2.1 in combinazioni sismiche, γM = 2

Comb.	Quota	N	M	σ0	Mu	c.s.	Verifica
SLV 2	5.25	-11757	4837.23	20098	10261.89	2.121	Si
SLV 2	7.15	-7994	-3143.26	13664	7416.66	2.36	Si
SLV 14	5.25	-21166	-1786.7	36180	15563.55	8.711	Si
SLV 14	7.15	-19475	4854.93	33290	14801.34	3.049	Si
SLV 3	5.25	-6670	4134.78	11401	6317.24	1.528	Si
SLV 3	7.15	-4203	-3294.85	7185	4132.45	1.254	Si
SLV 12	5.25	-6850	-990.3	11709	6469.74	6.533	Si
SLV 12	7.15	-7243	1727.13	12381	6799.81	3.937	Si
SLV 4	5.25	-6670	4134.78	11401	6317.24	1.528	Si
SLV 4	7.15	-4203	-3294.85	7185	4132.45	1.254	Si
SLV 13	5.25	-21166	-1786.7	36180	15563.55	8.711	Si
SLV 13	7.15	-19475	4854.93	33290	14801.34	3.049	Si
SLV 15	5.25	-16078	-2489.15	27484	13017.99	5.23	Si
SLV 15	7.15	-15684	4703.34	26810	12789.18	2.719	Si
SLV 11	5.25	-6850	-990.3	11709	6469.74	6.533	Si
SLV 11	7.15	-7243	1727.13	12381	6799.81	3.937	Si
SLV 16	5.25	-16078	-2489.15	27484	13017.99	5.23	Si
SLV 16	7.15	-15684	4703.34	26810	12789.18	2.719	Si
SLV 1	5.25	-11757	4837.23	20098	10261.89	2.121	Si
SLV 1	7.15	-7994	-3143.26	13664	7416.66	2.36	Si

Verifica a taglio nel piano secondo D.M. 17-01-18 (N.T.C.) §7.8.2.2.2 con rottura per scorrimento in combinazioni non sismiche, γM = 3

Comb.	Quota	N	V par	M	σ0	σN	l'	fvd	Vt scorr.	Vt fess.diag.	Vt,lim	c.s.	Verifica
SLU 23	5.25	-16104	896	1914.39		27528	2.0893	9226	5397			6.02	Si
SLU 23	7.15	-13382	948	930.86		22874	2.0893	8605	5034			5.31	Si
SLU 68	5.25	-19881	1050	2260.52		33985	2.0893	10087	5901			5.62	Si
SLU 68	7.15	-16482	1101	1089.89		28175	2.0893	9312	5448			4.95	Si
SLU 55	5.25	-19810	993	2245.35		33862	2.0893	10071	5891			5.93	Si
SLU 55	7.15	-16497	1045	1125		28199	2.0893	9315	5450			5.22	Si
SLU 26	5.25	-16520	894	1942.09		28238	2.0893	9321	5453			6.1	Si
SLU 26	7.15	-13807	945	952.38		23601	2.0893	8702	5091			5.38	Si
SLU 65	5.25	-19466	1052	2232.82		33274	2.0893	9992	5845			5.55	Si
SLU 65	7.15	-16057	1103	1068.37		27448	2.0893	9215	5391			4.89	Si
SLU 52	5.25	-19394	995	2217.65		33152	2.0893	9976	5836			5.86	Si
SLU 52	7.15	-16072	1047	1103.48		27473	2.0893	9219	5393			5.15	Si
SLU 44	5.25	-17871	1188	2164.6		30549	2.0893	9629	5633			4.74	Si
SLU 44	7.15	-14356	1239	886.57		24540	2.0893	8828	5164			4.17	Si
SLU 5	5.25	-14925	1029	1873.87		25513	2.0893	8957	5240			5.09	Si
SLU 5	7.15	-12106	1081	770.58		20693	2.0893	8315	4864			4.5	Si
SLU 2	5.25	-14510	1031	1846.17		24803	2.0893	8863	5185			5.03	Si
SLU 2	7.15	-11680	1083	749.06		19967	2.0893	8218	4807			4.44	Si
SLU 47	5.25	-18287	1186	2192.29		31260	2.0893	9724	5688			4.8	Si
SLU 47	7.15	-14781	1237	908.09		25267	2.0893	8924	5221			4.22	Si

Verifica a taglio nel piano secondo D.M. 17-01-18 (N.T.C.) §7.8.2.2.2 con rottura per scorrimento in combinazioni sismiche, γM = 2

Comb.	Quota	N	V par	M	σ0	σN	l'	fvd	Vt scorr.	Vt fess.diag.	Vt,lim	c.s.	Verifica
SLV 15	5.25	-16078	-5475	-2489.15		27484	2.0893	13830	8091			1.48	Si
SLV 15	7.15	-15684	-5086	4703.34		26810	2.0893	13695	8012			1.58	Si
SLV 3	5.25	-6670	4110	4134.78		18695	1.2741	12072	4307			1.05	Si
SLV 3	7.15	-4203	3746	-3294.85		19192	0.7821	12172	2666			0.71	No, Vu<V
SLV 4	5.25	-6670	4110	4134.78		18695	1.2741	12072	4307			1.05	Si
SLV 4	7.15	-4203	3746	-3294.85		19192	0.7821	12172	2666			0.71	No, Vu<V
SLV 1	5.25	-11757	6021	4837.23		22104	1.8997	12754	6784			1.13	Si
SLV 1	7.15	-7994	5628	-3143.26		14608	1.9543	11255	6159			1.09	Si
SLV 12	5.25	-6850	-4350	-990.3		11709	2.0893	10675	6245			1.44	Si
SLV 12	7.15	-7243	-4191	1727.13		12381	2.0893	10810	6324			1.51	Si
SLV 2	5.25	-11757	6021	4837.23		22104	1.8997	12754	6784			1.13	Si
SLV 2	7.15	-7994	5628	-3143.26		14608	1.9543	11255	6159			1.09	Si
SLV 16	5.25	-16078	-5475	-2489.15		27484	2.0893	13830	8091			1.48	Si
SLV 16	7.15	-15684	-5086	4703.34		26810	2.0893	13695	8012			1.58	Si
SLV 5	5.25	-20986	4896	3338.38		35873	2.0893	15508	9072			1.85	Si
SLV 5	7.15	-16434	4733	-167.04		28093	2.0893	13952	8162			1.72	Si
SLV 6	5.25	-20986	4896	3338.38		35873	2.0893	15508	9072			1.85	Si
SLV 6	7.15	-16434	4733	-167.04		28093	2.0893	13952	8162			1.72	Si
SLV 11	5.25	-6850	-4350	-990.3		11709	2.0893	10675	6245			1.44	Si
SLV 11	7.15	-7243	-4191	1727.13		12381	2.0893	10810	6324			1.51	Si

Verifica a pressoflessione fuori piano D.M. 17-01-18 (N.T.C.)

quota 6.125 Wa 0.05 denominatore 8 γM = 2

Comb.	fd	Sa	σ0	N	M	Mc	Coeff.s.	Verifica
SLV 8	143750	0.38	7326	-4286	212.58	564.05	2.65	Si
SLV 7	143750	0.38	7326	-4286	212.58	564.05	2.65	Si
SLV 3	143750	0.38	9453	-5530	212.58	714.33	3.36	Si
SLV 4	143750	0.38	9453	-5530	212.58	714.33	3.36	Si
SLV 12	143750	0.38	12818	-7499	212.58	939.69	4.42	Si
SLV 11	143750	0.38	12818	-7499	212.58	939.69	4.42	Si
SLV 1	143750	0.38	16769	-9810	212.58	1184.88	5.57	Si
SLV 2	143750	0.38	16769	-9810	212.58	1184.88	5.57	Si
SLV 15	143750	0.38	27760	-16240	212.58	1757.03	8.27	Si
SLV 16	143750	0.38	27760	-16240	212.58	1757.03	8.27	Si

Verifica dei meccanismi locali di collasso con analisi cinematica lineare

forza di aggancio al piano = 0 quota mezzeria = 6.125 Wa = 0.05 Ta = 0.0752

Comb.	N top	N base	V orto	α0	M*	e*	a0*	aLim	Verifica
SLV 13	-16062	-23481	7	0.043	1928.3	0.955	0.65651	11.26714	No
SLV 14	-16062	-23481	7	0.043	1928.3	0.955	0.65651	11.26714	No
SLV 15	-13182	-18588	-22	0.043	1635.9	0.948	0.6569	11.26714	No
SLV 16	-13182	-18588	-22	0.043	1635.9	0.948	0.6569	11.26714	No
SLV 9	-16166	-23986	46	0.041	1938.9	0.956	0.62301	9.97238	No
SLV 10	-16166	-23986	46	0.041	1938.9	0.956	0.62301	9.97238	No
SLV 6	-13375	-19525	51	0.041	1655.4	0.949	0.62712	9.97238	No
SLV 5	-13375	-19525	51	0.041	1655.4	0.949	0.62712	9.97238	No
SLV 2	-6760	-8611	22	0.045	986.4	0.922	0.71613	11.26714	No
SLV 1	-6760	-8611	22	0.045	986.4	0.922	0.71613	11.26714	No

Tabella dei coefficienti di sicurezza minimi

Stato limite	Coeff.s.	Comb.	Verifica
PF_SLU	5.324	SLU 76	Si
V_SLU	4.168	SLU 44	Si
PF_SLV	1.254	SLV 3	Si
V_SLV	0.712	SLV 3	No
PFFP_SLV	2.653	SLV 7	Si
R_SLV	0.058	SLV 13	No

Maschio 167

Verifiche condotte secondo D.M. 17-01-18 (N.T.C.)

Dati geometrici

X ini.	Y ini.	X fin.	Y fin.	Quota i.	Quota.s	l	Sp.	h netta	h ini.	h fin.	a	a.s.,sx	a.s.,dx
-2.889	5.83	-5.105	5.83	L4	L5	2.216	0.28	3.55	3.55	3.55			

Caratteristiche del materiale

(Circolare 7 21-01-19 C8.5.I) Muratura in mattoni pieni e malta di calce LC2_Corti

fb	fk	fvk0	fmedio	τ0	fv0	μ	ϕ	fv,lim	E	G	FC
600000			345000	9000	20000	0.58	0.77	32500	320000000	128000000	1.2

Verifica a pressoflessione nel piano secondo D.M. 17-01-18 NTC §7.8.2.2.1 in combinazioni non sismiche, γM = 3

Comb.	Quota	N	M	σ0	Mu	c.s.	Verifica
SLU 72	5.25	-24341	-1775.55	39230	13981.08	7.874	Si
SLU 72	7.15	-20133	-366.66	32448	13421.25	36.604	Si
SLU 83	5.25	-26673	-1765.9	42988	13957.01	7.904	Si
SLU 83	7.15	-22507	-527.56	36274	13832.54	26.22	Si
SLU 80	5.25	-26491	-1864.53	42695	13967.43	7.491	Si
SLU 80	7.15	-22235	-443.03	35835	13797.94	31.144	Si
SLU 70	5.25	-24612	-1780.3	39667	13990.54	7.859	Si
SLU 70	7.15	-20394	-370.71	32869	13478.64	36.359	Si
SLU 84	5.25	-26665	-1780.36	42976	13957.45	7.84	Si
SLU 84	7.15	-22492	-528.19	36249	13830.67	26.185	Si
SLU 77	5.25	-26770	-1854.81	43144	13950.83	7.521	Si
SLU 77	7.15	-22512	-446.45	36281	13833.1	30.984	Si
SLU 69	5.25	-24619	-1765.83	39679	13990.74	7.923	Si
SLU 69	7.15	-20410	-370.08	32894	13481.91	36.43	Si
SLU 79	5.25	-26498	-1850.06	42707	13967.05	7.55	Si
SLU 79	7.15	-22250	-442.4	35860	13799.98	31.193	Si
SLU 71	5.25	-24348	-1761.09	39241	13981.37	7.939	Si
SLU 71	7.15	-20148	-366.03	32472	13424.7	36.676	Si
SLU 78	5.25	-26762	-1869.27	43133	13951.3	7.463	Si
SLU 78	7.15	-22496	-447.08	36257	13831.24	30.937	Si

Verifica a pressoflessione nel piano secondo D.M. 17-01-18 NTC §7.8.2.2.1 in combinazioni sismiche, γM = 2

Comb.	Quota	N	M	σ0	Mu	c.s.	Verifica
SLV 6	5.25	-6746	1300.28	10872	6809	5.237	Si
SLV 6	7.15	-7522	-1678.4	12123	7507.15	4.473	Si
SLV 13	5.25	-20259	-3898.84	32652	16448.62	4.219	Si
SLV 13	7.15	-12753	2814.53	20553	11753.02	4.176	Si
SLV 4	5.25	-15115	1573.46	24361	13408.26	8.522	Si
SLV 4	7.15	-16516	-3565	26618	14312.68	4.015	Si
SLV 16	5.25	-25858	-4802.76	41674	18878.24	3.931	Si
SLV 16	7.15	-16979	3005.12	27364	14598.98	4.858	Si
SLV 14	5.25	-20259	-3898.84	32652	16448.62	4.219	Si
SLV 14	7.15	-12753	2814.53	20553	11753.02	4.176	Si
SLV 5	5.25	-6746	1300.28	10872	6809	5.237	Si
SLV 5	7.15	-7522	-1678.4	12123	7507.15	4.473	Si
SLV 3	5.25	-15115	1573.46	24361	13408.26	8.522	Si
SLV 3	7.15	-16516	-3565	26618	14312.68	4.015	Si
SLV 2	5.25	-9517	2477.38	15338	9220.87	3.722	Si
SLV 2	7.15	-12290	-3755.59	19807	11409.55	3.038	Si
SLV 15	5.25	-25858	-4802.76	41674	18878.24	3.931	Si
SLV 15	7.15	-16979	3005.12	27364	14598.98	4.858	Si
SLV 1	5.25	-9517	2477.38	15338	9220.87	3.722	Si
SLV 1	7.15	-12290	-3755.59	19807	11409.55	3.038	Si

Verifica a taglio nel piano secondo D.M. 17-01-18 (N.T.C.) §7.8.2.2.2 con rottura per scorrimento in combinazioni non sismiche, γM = 3

Comb.	Quota	N	V par	M	σ0	σN	l'	fvd	Vt scorr.	Vt fess.diag.	Vt,lim	c.s.	Verifica
SLU 71	5.25	-24348	-1610	-1761.09		39241	2.216	10788	6693			4.16	Si
SLU 71	7.15	-20148	-1579	-366.03		32472	2.216	9885	6133			3.88	Si
SLU 72	5.25	-24341	-1621	-1775.55		39230	2.216	10786	6693			4.13	Si
SLU 72	7.15	-20133	-1593	-366.66		32448	2.216	9882	6131			3.85	Si
SLU 70	5.25	-24612	-1627	-1780.3		39667	2.216	10833	6722			4.13	Si
SLU 70	7.15	-20394	-1599	-370.71		32869	2.216	9938	6166			3.86	Si
SLU 50	5.25	-22042	-1493	-1627.93		35524	2.216	10292	6386			4.28	Si
SLU 50	7.15	-17991	-1466	-325.94		28996	2.216	9422	5846			3.99	Si
SLU 78	5.25	-26762	-1659	-1869.27		43133	2.216	10833	6722			4.05	Si
SLU 78	7.15	-22496	-1628	-447.08		36257	2.216	10390	6447			3.96	Si
SLU 79	5.25	-26498	-1641	-1850.06		42707	2.216	10833	6722			4.1	Si
SLU 79	7.15	-22250	-1608	-442.4		35860	2.216	10337	6414			3.99	Si
SLU 51	5.25	-22035	-1504	-1642.4		35513	2.216	10291	6385			4.24	Si
SLU 51	7.15	-17976	-1480	-326.57		28971	2.216	9418	5844			3.95	Si
SLU 80	5.25	-26491	-1652	-1864.53		42695	2.216	10833	6722			4.07	Si
SLU 80	7.15	-22235	-1622	-443.03		35835	2.216	10334	6412			3.95	Si
SLU 49	5.25	-22306	-1511	-1647.14		35950	2.216	10349	6421			4.25	Si
SLU 49	7.15	-18237	-1486	-330.62		29392	2.216	9475	5879			3.96	Si
SLU 69	5.25	-24619	-1616	-1765.83		39679	2.216	10833	6722			4.16	Si
SLU 69	7.15	-20410	-1585	-370.08		32894	2.216	9941	6168			3.89	Si

Verifica a taglio nel piano secondo D.M. 17-01-18 (N.T.C.) §7.8.2.2.2 con rottura per scorrimento in combinazioni sismiche, γM = 2

Comb.	Quota	N	V par	M	σ0	σN	l'	fvd	Vt scorr.	Vt fess.diag.	Vt,lim	c.s.	Verifica
SLV 5	5.25	-6746	5443	1300.28		10872	2.216	10508	6520			1.2	Si
SLV 5	7.15	-7522	4518	-1678.4		12123	2.216	10758	6675			1.48	Si
SLV 11	5.25	-28629	-7414	-3625.66		46140	2.216	16250	10083			1.36	Si
SLV 11	7.15	-21747	-6443	927.93		35049	2.216	15343	9520			1.48	Si
SLV 14	5.25	-20259	-6421	-3898.84		32652	2.216	14864	9222			1.44	Si
SLV 14	7.15	-12753	-5914	2814.53		20553	2.216	12444	7721			1.31	Si
SLV 2	5.25	-9517	7091	2477.38		15338	2.216	11401	7074			1	No, Vu<V
SLV 2	7.15	-12290	6188	-3755.59		19807	2.216	12295	7629			1.23	Si
SLV 16	5.25	-25858	-9062	-4802.76		41674	2.216	16250	10083			1.11	Si
SLV 16	7.15	-16979	-8113	3005.12		27364	2.216	13806	8566			1.06	Si

Comb.	Quota	N	V par	M	σ0	σN	l'	fvd	Vt scorr.	Vt fess.diag.	Vt,lim	c.s.	Verifica
SLV 1	5.25	-9517	7091	2477.38		15338	2.216	11401	7074			1	No, Vu<V
SLV 1	7.15	-12290	6188	-3755.59		19807	2.216	12295	7629			1.23	Si
SLV 12	5.25	-28629	-7414	-3625.66		46140	2.216	16250	10083			1.36	Si
SLV 12	7.15	-21747	-6443	927.93		35049	2.216	15343	9520			1.48	Si
SLV 13	5.25	-20259	-6421	-3898.84		32652	2.216	14864	9222			1.44	Si
SLV 13	7.15	-12753	-5914	2814.53		20553	2.216	12444	7721			1.31	Si
SLV 6	5.25	-6746	5443	1300.28		10872	2.216	10508	6520			1.2	Si
SLV 6	7.15	-7522	4518	-1678.4		12123	2.216	10758	6675			1.48	Si
SLV 15	5.25	-25858	-9062	-4802.76		41674	2.216	16250	10083			1.11	Si
SLV 15	7.15	-16979	-8113	3005.12		27364	2.216	13806	8566			1.06	Si

Verifica a pressoflessione fuori piano D.M. 17-01-18 (N.T.C.)

quota 6.125 Wa 0.05 denominatore 8 γM = 2

Comb.	fd	Sa	σ0	N	M	Mc	Coeff.s.	Verifica
SLV 6	143750	0.38	12921	-8017	225.46	1003.7	4.45	Si
SLV 5	143750	0.38	12921	-8017	225.46	1003.7	4.45	Si
SLV 10	143750	0.38	15277	-9479	225.46	1161.12	5.15	Si
SLV 9	143750	0.38	15277	-9479	225.46	1161.12	5.15	Si
SLV 1	143750	0.38	18656	-11576	225.46	1373.15	6.09	Si
SLV 2	143750	0.38	18656	-11576	225.46	1373.15	6.09	Si
SLV 4	143750	0.38	25928	-16088	225.46	1774.35	7.87	Si
SLV 3	143750	0.38	25928	-16088	225.46	1774.35	7.87	Si
SLV 13	143750	0.38	26510	-16448	225.46	1803.18	8	Si
SLV 14	143750	0.38	26510	-16448	225.46	1803.18	8	Si

Verifica dei meccanismi locali di collasso con analisi cinematica lineare

forza di aggancio al piano = 0 quota mezzeria = 6.125 Wa = 0.05 Ta = 0.0752

Comb.	N top	N base	V orto	α0	M*	e*	a0*	aLim	Verifica
SLV 9	-6855	-9607	198	0.026	1014.6	0.92	0.40845	9.97238	No
SLV 10	-6855	-9607	198	0.026	1014.6	0.92	0.40845	9.97238	No
SLV 13	-11738	-17663	131	0.036	1507.5	0.942	0.54865	11.26714	No
SLV 14	-11738	-17663	131	0.036	1507.5	0.942	0.54865	11.26714	No
SLV 6	-6312	-7785	151	0.031	960.3	0.917	0.48624	9.97238	No
SLV 5	-6312	-7785	151	0.031	960.3	0.917	0.48624	9.97238	No
SLV 3	-13574	-16672	-131	0.036	1693.7	0.947	0.55324	11.26714	No
SLV 4	-13574	-16672	-131	0.036	1693.7	0.947	0.55324	11.26714	No
SLV 7	-18457	-24729	-197	0.034	2189.7	0.958	0.50974	9.97238	No
SLV 8	-18457	-24729	-197	0.034	2189.7	0.958	0.50974	9.97238	No

Tabella dei coefficienti di sicurezza minimi

Stato limite	Coeff.s.	Comb.	Verifica
PF_SLU	7.463	SLU 78	Si
V_SLU	3.848	SLU 72	Si
PF_SLV	3.038	SLV 1	Si
V_SLV	0.998	SLV 1	No
PFFP_SLV	4.452	SLV 5	Si
R_SLV	0.041	SLV 9	No

Maschio 168

Verifiche condotte secondo D.M. 17-01-18 (N.T.C.)

Dati geometrici

X ini.	Y ini.	X fin.	Y fin.	Quota i.	Quota.s	l	Sp.	h netta	h ini.	h fin.	a	a.s.,sx	a.s.,dx
-0.134	5.83	-1.889	5.83	L4	L5	1.755	0.28	3.55	3.55	3.55			

Caratteristiche del materiale

(Circolare 7 21-01-19 C8.5.I) Muratura in mattoni pieni e malta di calce LC2_Corti

fb	fk	fvk0	fmedio	τ0	fv0	μ	ϕ	fv,lim	E	G	FC
600000			345000	9000	20000	0.58	0.77	32500	320000000	128000000	1.2

Verifica a pressoflessione nel piano secondo D.M. 17-01-18 NTC §7.8.2.2.1 in combinazioni non sismiche, γM = 3

Comb.	Quota	N	M	σ0	Mu	c.s.	Verifica
SLU 82	5.25	-17821	-18.36	36256	8679.42	472.73	Si
SLU 82	7.15	-18251	1955.45	37132	8716.86	4.458	Si
SLU 75	5.25	-17942	-23.65	36504	8690.84	367.489	Si
SLU 75	7.15	-18307	1946.79	37245	8721.09	4.48	Si
SLU 77	5.25	-18411	-56.2	37457	8728.69	155.319	Si
SLU 77	7.15	-18862	2040.12	38375	8756.03	4.292	Si
SLU 78	5.25	-18439	-65.27	37514	8730.64	133.771	Si
SLU 78	7.15	-18904	2040.39	38461	8758.12	4.292	Si
SLU 80	5.25	-18266	-77.9	37163	8718.02	111.915	Si
SLU 80	7.15	-18730	2030.76	38107	8748.96	4.308	Si
SLU 74	5.25	-17914	-14.58	36447	8688.28	595.806	Si
SLU 74	7.15	-18265	1946.53	37160	8717.9	4.479	Si
SLU 83	5.25	-18289	-50.91	37209	8719.77	171.28	Si
SLU 83	7.15	-18807	2048.79	38262	8753.15	4.272	Si
SLU 79	5.25	-18238	-68.83	37106	8715.85	126.626	Si
SLU 79	7.15	-18688	2030.5	38021	8746.54	4.308	Si
SLU 81	5.25	-17793	-9.29	36199	8676.71	933.649	Si
SLU 81	7.15	-18209	1955.19	37047	8713.57	4.457	Si
SLU 84	5.25	-18317	-59.98	37266	8721.87	145.422	Si
SLU 84	7.15	-18849	2049.05	38348	8755.34	4.273	Si

Verifica a pressoflessione nel piano secondo D.M. 17-01-18 NTC §7.8.2.2.1 in combinazioni sismiche, γM = 2

Comb.	Quota	N	M	σ0	Mu	c.s.	Verifica
SLV 15	5.25	-16776	-2297.19	34131	10611.28	4.619	Si
SLV 15	7.15	-19224	4331.09	39112	11472.11	2.649	Si
SLV 2	5.25	-7902	2396.37	16077	6023.03	2.513	Si
SLV 2	7.15	-5310	-1861.68	10803	4248.28	2.282	Si
SLV 14	5.25	-12248	-2405.04	24920	8557.91	3.558	Si
SLV 14	7.15	-15176	3657.66	30875	9953.99	2.721	Si
SLV 11	5.25	-20537	-490.88	41783	11861.39	24.164	Si
SLV 11	7.15	-20495	3184.98	41697	11849.69	3.72	Si
SLV 4	5.25	-12429	2504.21	25288	8651.58	3.455	Si
SLV 4	7.15	-9358	-1188.25	19040	6933.92	5.835	Si
SLV 13	5.25	-12248	-2405.04	24920	8557.91	3.558	Si
SLV 13	7.15	-15176	3657.66	30875	9953.99	2.721	Si
SLV 16	5.25	-16776	-2297.19	34131	10611.28	4.619	Si
SLV 16	7.15	-19224	4331.09	39112	11472.11	2.649	Si
SLV 1	5.25	-7902	2396.37	16077	6023.03	2.513	Si
SLV 1	7.15	-5310	-1861.68	10803	4248.28	2.282	Si
SLV 3	5.25	-12429	2504.21	25288	8651.58	3.455	Si
SLV 3	7.15	-9358	-1188.25	19040	6933.92	5.835	Si
SLV 12	5.25	-20537	-490.88	41783	11861.39	24.164	Si
SLV 12	7.15	-20495	3184.98	41697	11849.69	3.72	Si

Verifica a taglio nel piano secondo D.M. 17-01-18 (N.T.C.) §7.8.2.2.2 con rottura per scorrimento in combinazioni non sismiche, γM = 3

Comb.	Quota	N	V par	M	σ0	σN	I'	fvd	Vt scorr.	Vt fess.diag.	Vt,lim	c.s.	Verifica
SLU 38	5.25	-15277	-2085	-120.48		31081	1.7554	9700	4768			2.29	Si
SLU 38	7.15	-15938	-2083	1793.84		32426	1.7554	9879	4856			2.33	Si
SLU 84	5.25	-18317	-2351	-59.98		37266	1.7554	10524	5173			2.2	Si
SLU 84	7.15	-18849	-2350	2049.05		38348	1.7554	10669	5244			2.23	Si
SLU 80	5.25	-18266	-2320	-77.9		37163	1.7554	10511	5166			2.23	Si
SLU 80	7.15	-18730	-2319	2030.76		38107	1.7554	10636	5228			2.25	Si
SLU 42	5.25	-15328	-2116	-102.56		31184	1.7554	9713	4774			2.26	Si
SLU 42	7.15	-16056	-2115	1812.13		32667	1.7554	9911	4871			2.3	Si
SLU 77	5.25	-18411	-2306	-56.2		37457	1.7554	10550	5185			2.25	Si
SLU 77	7.15	-18862	-2308	2040.12		38375	1.7554	10672	5246			2.27	Si
SLU 82	5.25	-17821	-2233	-18.36		36256	1.7554	10390	5107			2.29	Si
SLU 82	7.15	-18251	-2232	1955.45		37132	1.7554	10507	5164			2.31	Si
SLU 41	5.25	-15300	-2103	-93.5		31128	1.7554	9706	4771			2.27	Si
SLU 41	7.15	-16014	-2105	1811.87		32581	1.7554	9900	4866			2.31	Si
SLU 79	5.25	-18238	-2307	-68.83		37106	1.7554	10503	5162			2.24	Si
SLU 79	7.15	-18688	-2309	2030.5		38021	1.7554	10625	5222			2.26	Si
SLU 78	5.25	-18439	-2319	-65.27		37514	1.7554	10557	5189			2.24	Si
SLU 78	7.15	-18904	-2318	2040.39		38461	1.7554	10684	5251			2.27	Si
SLU 83	5.25	-18289	-2338	-50.91		37209	1.7554	10517	5169			2.21	Si
SLU 83	7.15	-18807	-2340	2048.79		38262	1.7554	10657	5238			2.24	Si

Verifica a taglio nel piano secondo D.M. 17-01-18 (N.T.C.) §7.8.2.2.2 con rottura per scorrimento in combinazioni sismiche, γM = 2

Comb.	Quota	N	V par	M	σ0	σN	I'	fvd	Vt scorr.	Vt fess.diag.	Vt,lim	c.s.	Verifica
SLV 4	5.25	-12429	3192	2504.21		25288	1.7554	13391	6582			2.06	Si
SLV 4	7.15	-9358	2617	-1188.25		19040	1.7554	12141	5968			2.28	Si
SLV 13	5.25	-12248	-5898	-2405.04		24920	1.7554	13317	6546			1.11	Si
SLV 13	7.15	-15176	-5326	3657.66		30875	1.7554	14508	7131			1.34	Si
SLV 1	5.25	-7902	2750	2396.37		16376	1.7233	11609	5601			2.04	Si
SLV 1	7.15	-5310	2350	-1861.68		11992	1.5812	10732	4752			2.02	Si
SLV 16	5.25	-16776	-5456	-2297.19		34131	1.7554	15160	7451			1.37	Si
SLV 16	7.15	-19224	-5058	4331.09		39112	1.7554	16156	7941			1.57	Si
SLV 10	5.25	-5445	-3386	-850.36		11078	1.7554	10549	5185			1.53	Si
SLV 10	7.15	-6999	-2951	940.23		14240	1.7554	11181	5496			1.86	Si
SLV 15	5.25	-16776	-5456	-2297.19		34131	1.7554	15160	7451			1.37	Si
SLV 15	7.15	-19224	-5058	4331.09		39112	1.7554	16156	7941			1.57	Si
SLV 3	5.25	-12429	3192	2504.21		25288	1.7554	13391	6582			2.06	Si
SLV 3	7.15	-9358	2617	-1188.25		19040	1.7554	12141	5968			2.28	Si
SLV 9	5.25	-5445	-3386	-850.36		11078	1.7554	10549	5185			1.53	Si
SLV 9	7.15	-6999	-2951	940.23		14240	1.7554	11181	5496			1.86	Si
SLV 14	5.25	-12248	-5898	-2405.04		24920	1.7554	13317	6546			1.11	Si
SLV 14	7.15	-15176	-5326	3657.66		30875	1.7554	14508	7131			1.34	Si
SLV 2	5.25	-7902	2750	2396.37		16376	1.7233	11609	5601			2.04	Si
SLV 2	7.15	-5310	2350	-1861.68		11992	1.5812	10732	4752			2.02	Si

Verifica a pressoflessione fuori piano D.M. 17-01-18 (N.T.C.)

quota 6.125 Wa 0.05 denominatore 8 γM = 2

Comb.	fd	Sa	σ0	N	M	Mc	Coeff.s.	Verifica
SLV 6	143750	0.38	9743	-4789	178.6	616.96	3.45	Si
SLV 5	143750	0.38	9743	-4789	178.6	616.96	3.45	Si
SLV 9	143750	0.38	14216	-6988	178.6	864.44	4.84	Si
SLV 10	143750	0.38	14216	-6988	178.6	864.44	4.84	Si
SLV 1	143750	0.38	14217	-6988	178.6	864.48	4.84	Si
SLV 2	143750	0.38	14217	-6988	178.6	864.48	4.84	Si
SLV 3	143750	0.38	22526	-11072	178.6	1264.3	7.08	Si
SLV 4	143750	0.38	22526	-11072	178.6	1264.3	7.08	Si
SLV 13	143750	0.38	29130	-14318	178.6	1526.6	8.55	Si
SLV 14	143750	0.38	29130	-14318	178.6	1526.6	8.55	Si

Verifica dei meccanismi locali di collasso con analisi cinematica lineare

forza di aggancio al piano = 0 quota mezzeria = 6.125 Wa = 0.05 Ta = 0.0752

Comb.	N top	N base	V orto	α0	M*	e*	a0*	aLim	Verifica
SLV 2	-5228	-5049	94	0.035	783.5	0.918	0.54925	11.26714	No
SLV 1	-5228	-5049	94	0.035	783.5	0.918	0.54925	11.26714	No
SLV 16	-14829	-18286	-93	0.038	1755.8	0.959	0.56931	11.26714	No
SLV 15	-14829	-18286	-93	0.038	1755.8	0.959	0.56931	11.26714	No

Comb.	N top	N base	V orto	α0	M*	e*	a0*	aLim	Verifica
SLV 13	-11983	-13965	-65	0.039	1466.6	0.951	0.59949	11.26714	No
SLV 14	-11983	-13965	-65	0.039	1466.6	0.951	0.59949	11.26714	No
SLV 3	-8074	-9370	66	0.039	1070.2	0.936	0.60605	11.26714	No
SLV 4	-8074	-9370	66	0.039	1070.2	0.936	0.60605	11.26714	No
SLV 12	-15785	-20206	-70	0.039	1853	0.96	0.58934	9.97238	No
SLV 11	-15785	-20206	-70	0.039	1853	0.96	0.58934	9.97238	No

Tabella dei coefficienti di sicurezza minimi

Stato limite	Coeff.s.	Comb.	Verifica
PF_SLU	4.272	SLU 83	Si
V_SLU	2.2	SLU 84	Si
PF_SLV	2.282	SLV 1	Si
V_SLV	1.11	SLV 13	Si
PFFP_SLV	3.454	SLV 5	Si
R_SLV	0.049	SLV 1	No

Maschio 169

Verifiche condotte secondo D.M. 17-01-18 (N.T.C.)

Dati geometrici

X ini.	Y ini.	X fin.	Y fin.	Quota i.	Quota.s	l	Sp.	h netta	h ini.	h fin.	a	a.s.,sx	a.s.,dx
-0.134	-3.248	-0.134	1.387	L4	L5	4.634	0.28	3.55	3.55	3.55			

Caratteristiche del materiale

(Circolare 7 21-01-19 C8.5.I) Muratura in mattoni pieni e malta di calce LC2_Corti

fb	fk	fvk0	fmedio	τ0	fv0	μ	ϕ	fv,lim	E	G	FC
600000			345000	9000	20000	0.58	0.77	32500	320000000	128000000	1.2

Verifica a pressoflessione nel piano secondo D.M. 17-01-18 NTC §7.8.2.2.1 in combinazioni non sismiche, γM = 3

Comb.	Quota	N	M	σ0	Mu	c.s.	Verifica
SLU 80	4.35	-44195	11265.84	34059	59587.07	5.289	Si
SLU 80	6.45	-38065	5775.06	29336	56437.65	9.773	Si
SLU 82	4.35	-44042	11255.54	33941	59528.41	5.289	Si
SLU 82	6.45	-37599	5671.92	28976	56130.64	9.896	Si
SLU 83	4.35	-45720	11686.39	35235	60114.68	5.144	Si
SLU 83	6.45	-38908	5769.54	29985	56968.2	9.874	Si
SLU 74	4.35	-44536	11269.35	34322	59713.82	5.299	Si
SLU 74	6.45	-38028	5731.62	29307	56413.65	9.843	Si
SLU 77	4.35	-45439	11533.11	35018	60025.14	5.205	Si
SLU 77	6.45	-38930	5831.99	30002	56981.47	9.771	Si
SLU 75	4.35	-43761	11102.26	33725	59418.21	5.352	Si
SLU 75	6.45	-37621	5734.36	28993	56145.17	9.791	Si
SLU 81	4.35	-44817	11422.64	34538	59814.48	5.236	Si
SLU 81	6.45	-38007	5669.18	29290	56399.51	9.948	Si
SLU 78	4.35	-44664	11366.02	34421	59760.22	5.258	Si
SLU 78	6.45	-38522	5834.72	29688	56729.1	9.723	Si
SLU 84	4.35	-44945	11519.3	34637	59859.3	5.196	Si
SLU 84	6.45	-38500	5772.28	29671	56715.43	9.825	Si
SLU 79	4.35	-44970	11432.93	34657	59867.94	5.236	Si
SLU 79	6.45	-38473	5772.32	29650	56698.19	9.822	Si

Verifica a pressoflessione nel piano secondo D.M. 17-01-18 NTC §7.8.2.2.1 in combinazioni sismiche, γM = 2

Comb.	Quota	N	M	σ0	Mu	c.s.	Verifica
SLV 7	4.35	-25056	22949.83	19310	48882.76	2.13	Si
SLV 7	6.45	-17602	4000.58	13565	36258.36	9.063	Si
SLV 5	4.35	-25487	-9026.71	19642	49562.22	5.491	Si
SLV 5	6.45	-26169	3840.18	20167	50627.91	13.184	Si
SLV 3	4.35	-13059	10396.35	10064	27766.78	2.671	Si
SLV 3	6.45	-11038	3496.43	8507	23796.03	6.806	Si
SLV 16	4.35	-47767	14286.89	36812	77335.79	5.413	Si
SLV 16	6.45	-38359	4776.46	29562	67378.49	14.106	Si
SLV 12	4.35	-35469	24116.99	27334	63799.31	2.645	Si
SLV 12	6.45	-25799	4384.59	19882	50051.4	11.415	Si
SLV 6	4.35	-25487	-9026.71	19642	49562.22	5.491	Si
SLV 6	6.45	-26169	3840.18	20167	50627.91	13.184	Si
SLV 4	4.35	-13059	10396.35	10064	27766.78	2.671	Si
SLV 4	6.45	-11038	3496.43	8507	23796.03	6.806	Si
SLV 8	4.35	-25056	22949.83	19310	48882.76	2.13	Si
SLV 8	6.45	-17602	4000.58	13565	36258.36	9.063	Si
SLV 15	4.35	-47767	14286.89	36812	77335.79	5.413	Si
SLV 15	6.45	-38359	4776.46	29562	67378.49	14.106	Si
SLV 11	4.35	-35469	24116.99	27334	63799.31	2.645	Si
SLV 11	6.45	-25799	4384.59	19882	50051.4	11.415	Si

Verifica a taglio nel piano secondo D.M. 17-01-18 (N.T.C.) §7.8.2.2.2 con rottura per scorrimento in combinazioni non sismiche, γM = 3

Comb.	Quota	N	V par	M	σ0	σN	l'	fvd	Vt scorr.	Vt fess.diag.	Vt,lim	c.s.	Verifica
SLU 71	4.35	-41113	1947	10226.11		31684	4.6342	9780	12690			6.52	Si
SLU 71	6.45	-35355	1940	5544.62		27247	4.6342	9188	11923			6.15	Si
SLU 50	4.35	-37199	1850	9042.52		28668	4.6342	9378	12169			6.58	Si
SLU 50	6.45	-32094	1843	5256.34		24733	4.6342	8853	11488			6.23	Si
SLU 77	4.35	-45439	2032	11533.11		35018	4.6342	10225	13267			6.53	Si
SLU 77	6.45	-38930	2024	5831.99		30002	4.6342	9556	12399			6.13	Si
SLU 69	4.35	-41582	1928	10326.28		32045	4.6342	9828	12753			6.61	Si
SLU 69	6.45	-35812	1921	5604.28		27599	4.6342	9235	11984			6.24	Si
SLU 74	4.35	-44536	1951	11269.35		34322	4.6342	10132	13147			6.74	Si
SLU 74	6.45	-38028	1943	5731.62		29307	4.6342	9463	12279			6.32	Si

Comb.	Quota	N	V par	M	σ0	σN	l'	fvd	Vt scorr.	Vt fess.diag.	Vt,lim	c.s.	Verifica
SLU 56	4.35	-41525	1935	10349.52		32002	4.6342	9823	12746			6.59	Si
SLU 56	6.45	-35668	1927	5543.71		27488	4.6342	9221	11965			6.21	Si
SLU 58	4.35	-41056	1953	10249.35		31641	4.6342	9774	12683			6.49	Si
SLU 58	6.45	-35211	1946	5484.04		27136	4.6342	9174	11904			6.12	Si
SLU 79	4.35	-44970	2050	11432.93		34657	4.6342	10176	13205			6.44	Si
SLU 79	6.45	-38473	2042	5772.32		29650	4.6342	9509	12339			6.04	Si
SLU 83	4.35	-45720	2014	11686.39		35235	4.6342	10253	13305			6.61	Si
SLU 83	6.45	-38908	2006	5769.54		29985	4.6342	9554	12397			6.18	Si
SLU 62	4.35	-41806	1917	10502.8		32219	4.6342	9851	12783			6.67	Si
SLU 62	6.45	-35646	1909	5481.27		27471	4.6342	9218	11962			6.27	Si

Verifica a taglio nel piano secondo D.M. 17-01-18 (N.T.C.) §7.8.2.2.2 con rottura per scorrimento in combinazioni sismiche, γM = 2

Comb.	Quota	N	V par	M	σ0	σN	l'	fvd	Vt scorr.	Vt fess.diag.	Vt,lim	c.s.	Verifica
SLV 6	4.35	-25487	-12593	-9026.71		19642	4.6342	12262	15911			1.26	Si
SLV 6	6.45	-26169	-10555	3840.18		20167	4.6342	12367	16047			1.52	Si
SLV 5	4.35	-25487	-12593	-9026.71		19642	4.6342	12262	15911			1.26	Si
SLV 5	6.45	-26169	-10555	3840.18		20167	4.6342	12367	16047			1.52	Si
SLV 12	4.35	-35469	15356	24116.99		27334	4.6342	13800	17907			1.17	Si
SLV 12	6.45	-25799	13308	4384.59		19882	4.6342	12310	15973			1.2	Si
SLV 8	4.35	-25056	14089	22949.83		21288	4.2035	12591	14819			1.05	Si
SLV 8	6.45	-17602	11502	4000.58		13565	4.6342	11046	14334			1.25	Si
SLV 10	4.35	-35899	-11326	-7859.54		27666	4.6342	13867	17993			1.59	Si
SLV 10	6.45	-34365	-8749	4224.19		26484	4.6342	13630	17686			2.02	Si
SLV 9	4.35	-35899	-11326	-7859.54		27666	4.6342	13867	17993			1.59	Si
SLV 9	6.45	-34365	-8749	4224.19		26484	4.6342	13630	17686			2.02	Si
SLV 7	4.35	-25056	14089	22949.83		21288	4.2035	12591	14819			1.05	Si
SLV 7	6.45	-17602	11502	4000.58		13565	4.6342	11046	14334			1.25	Si
SLV 15	4.35	-47767	7495	14286.89		36812	4.6342	15696	20367			2.72	Si
SLV 15	6.45	-38359	7695	4776.46		29562	4.6342	14246	18485			2.4	Si
SLV 11	4.35	-35469	15356	24116.99		27334	4.6342	13800	17907			1.17	Si
SLV 11	6.45	-25799	13308	4384.59		19882	4.6342	12310	15973			1.2	Si
SLV 16	4.35	-47767	7495	14286.89		36812	4.6342	15696	20367			2.72	Si
SLV 16	6.45	-38359	7695	4776.46		29562	4.6342	14246	18485			2.4	Si

Verifica a pressoflessione fuori piano D.M. 17-01-18 (N.T.C.)

quota 6.125 Wa 0.05 denominatore 8 γM = 2

Comb.	fd	Sa	σ0	N	M	Mc	Coeff.s.	Verifica
SLV 3	143750	0.38	9333	-12110	471.51	1565.89	3.32	Si
SLV 4	143750	0.38	9333	-12110	471.51	1565.89	3.32	Si
SLV 2	143750	0.38	10944	-14201	471.51	1810.1	3.84	Si
SLV 1	143750	0.38	10944	-14201	471.51	1810.1	3.84	Si
SLV 8	143750	0.38	14819	-19229	471.51	2365.54	5.02	Si
SLV 7	143750	0.38	14819	-19229	471.51	2365.54	5.02	Si
SLV 6	143750	0.38	20191	-26200	471.51	3061.88	6.49	Si
SLV 5	143750	0.38	20191	-26200	471.51	3061.88	6.49	Si
SLV 12	143750	0.38	21133	-27422	471.51	3175.1	6.73	Si
SLV 11	143750	0.38	21133	-27422	471.51	3175.1	6.73	Si

Verifica dei meccanismi locali di collasso con analisi cinematica lineare

forza di aggancio al piano = 0 quota mezzeria = 6.125 Wa = 0.05 Ta = 0.0752

Comb.	N top	N base	V orto	α0	M*	e*	a0*	aLim	Verifica
SLV 16	-30238	-47767	-28	0.043	3729.9	0.95	0.66396	11.26714	No
SLV 15	-30238	-47767	-28	0.043	3729.9	0.95	0.66396	11.26714	No
SLV 13	-31831	-47896	-3	0.044	3891.6	0.951	0.67029	11.26714	No
SLV 14	-31831	-47896	-3	0.044	3891.6	0.951	0.67029	11.26714	No
SLV 9	-26796	-35899	35	0.044	3380.6	0.945	0.67008	9.97238	No
SLV 10	-26796	-35899	35	0.044	3380.6	0.945	0.67008	9.97238	No
SLV 2	-12135	-13188	27	0.048	1901.8	0.913	0.76125	11.26714	No
SLV 1	-12135	-13188	27	0.048	1901.8	0.913	0.76125	11.26714	No
SLV 11	-21486	-35469	-45	0.044	2842.7	0.937	0.68348	9.97238	No
SLV 12	-21486	-35469	-45	0.044	2842.7	0.937	0.68348	9.97238	No

Tabella dei coefficienti di sicurezza minimi

Stato limite	Coeff.s.	Comb.	Verifica
PF_SLU	5.144	SLU 83	Si
V_SLU	6.041	SLU 79	Si
PF_SLV	2.13	SLV 7	Si
V_SLV	1.052	SLV 7	Si
PFFP_SLV	3.321	SLV 3	Si
R_SLV	0.059	SLV 15	No

Maschio 170

Verifiche condotte secondo D.M. 17-01-18 (N.T.C.)

Dati geometrici

X ini.	Y ini.	X fin.	Y fin.	Quota i.	Quota.s	l	Sp.	h netta	h ini.	h fin.	a	a.s.,sx	a.s.,dx
-0.134	2.187	-0.134	5.83	L4	L5	3.644	0.28	3.55	3.55	3.55			

Caratteristiche del materiale

(Circolare 7 21-01-19 C8.5.I) Muratura in mattoni pieni e malta di calce LC2_Corti

fb	fk	fvk0	fmedio	τ0	fv0	μ	ϕ	fv,lim	E	G	FC
600000			345000	9000	20000	0.58	0.77	32500	320000000	128000000	1.2

Verifica a pressoflessione nel piano secondo D.M. 17-01-18 NTC §7.8.2.2.1 in combinazioni non sismiche, γM = 3

Comb.	Quota	N	M	σ0	Mu	c.s.	Verifica
SLU 75	4.35	-46222	-4140.62	45304	37376.18	9.027	Si
SLU 75	6.45	-38506	-4589.93	37741	37650.05	8.203	Si
SLU 74	4.35	-46410	-4243.75	45489	37336.9	8.798	Si
SLU 74	6.45	-38712	-4855.12	37944	37676.74	7.76	Si
SLU 84	4.35	-47400	-4178.69	46459	37104.7	8.88	Si
SLU 84	6.45	-39518	-4799.95	38733	37762.9	7.867	Si
SLU 81	4.35	-46463	-4277.37	45540	37325.57	8.726	Si
SLU 81	6.45	-38691	-5041.12	37922	37674.01	7.473	Si
SLU 39	4.35	-38829	-3449.95	38058	37690.96	10.925	Si
SLU 39	6.45	-32521	-4412.51	31875	36064.82	8.173	Si
SLU 79	4.35	-47149	-4204.15	46212	37167.71	8.841	Si
SLU 79	6.45	-39362	-4797.83	38580	37748.44	7.868	Si
SLU 82	4.35	-46275	-4174.23	45356	37365.28	8.951	Si
SLU 82	6.45	-38484	-4775.93	37720	37647.12	7.883	Si
SLU 77	4.35	-47535	-4248.21	46591	37069.65	8.726	Si
SLU 77	6.45	-39747	-4879.14	38957	37782.16	7.744	Si
SLU 83	4.35	-47588	-4281.82	46643	37055.71	8.654	Si
SLU 83	6.45	-39725	-5065.14	38936	37780.42	7.459	Si
SLU 78	4.35	-47347	-4145.07	46407	37118.21	8.955	Si
SLU 78	6.45	-39540	-4613.95	38755	37764.84	8.185	Si

Verifica a pressoflessione nel piano secondo D.M. 17-01-18 NTC §7.8.2.2.1 in combinazioni sismiche, γM = 2

Comb.	Quota	N	M	σ0	Mu	c.s.	Verifica
SLV 13	4.35	-43111	-7987.27	42254	51381.39	6.433	Si
SLV 13	6.45	-33876	-5382.53	33204	44947.45	8.351	Si
SLV 6	4.35	-18883	-12832.88	18508	29191.61	2.275	Si
SLV 6	6.45	-12157	-176.69	11916	19988.95	113.133	Si
SLV 10	4.35	-27190	-13919.1	26650	38732.77	2.783	Si
SLV 10	6.45	-18639	-1882.36	18269	28880.84	15.343	Si
SLV 7	4.35	-36680	7735.95	35952	47164.29	6.097	Si
SLV 7	6.45	-34087	-4491.59	33410	45121.98	10.046	Si
SLV 5	4.35	-18883	-12832.88	18508	29191.61	2.275	Si
SLV 5	6.45	-12157	-176.69	11916	19988.95	113.133	Si
SLV 8	4.35	-36680	7735.95	35952	47164.29	6.097	Si
SLV 8	6.45	-34087	-4491.59	33410	45121.98	10.046	Si
SLV 14	4.35	-43111	-7987.27	42254	51381.39	6.433	Si
SLV 14	6.45	-33876	-5382.53	33204	44947.45	8.351	Si
SLV 1	4.35	-15420	-4366.53	15114	24619.01	5.638	Si
SLV 1	6.45	-12270	303.05	12027	20155.08	66.506	Si
SLV 9	4.35	-27190	-13919.1	26650	38732.77	2.783	Si
SLV 9	6.45	-18639	-1882.36	18269	28880.84	15.343	Si
SLV 2	4.35	-15420	-4366.53	15114	24619.01	5.638	Si
SLV 2	6.45	-12270	303.05	12027	20155.08	66.506	Si

Verifica a taglio nel piano secondo D.M. 17-01-18 (N.T.C.) §7.8.2.2.2 con rottura per scorrimento in combinazioni non sismiche, γM = 3

Comb.	Quota	N	V par	M	σ0	σN	l'	fvd	Vt scorr.	Vt fess.diag.	Vt,lim	c.s.	Verifica
SLU 47	4.35	-38249	-1867	-3641.06		37489	3.6438	10554	10768			5.77	Si
SLU 47	6.45	-31318	-1868	-3023.93		30696	3.6438	9648	9844			5.27	Si
SLU 78	4.35	-47347	-2063	-4145.07		46407	3.6438	10833	11053			5.36	Si
SLU 78	6.45	-39540	-2064	-4613.95		38755	3.6438	10723	10940			5.3	Si
SLU 55	4.35	-41899	-1973	-3832.68		41067	3.6438	10833	11053			5.6	Si
SLU 55	6.45	-34578	-1975	-3703.68		33891	3.6438	10074	10278			5.21	Si
SLU 80	4.35	-46961	-2079	-4101.02		46028	3.6438	10833	11053			5.32	Si
SLU 80	6.45	-39155	-2080	-4532.64		38378	3.6438	10673	10889			5.24	Si
SLU 59	4.35	-43149	-1981	-3905.89		42293	3.6438	10833	11053			5.58	Si
SLU 59	6.45	-35750	-1981	-3904.48		35040	3.6438	10228	10435			5.27	Si
SLU 68	4.35	-42060	-1965	-3836.19		41225	3.6438	10833	11053			5.62	Si
SLU 68	6.45	-34724	-1966	-3652.09		34035	3.6438	10093	10298			5.24	Si
SLU 73	4.35	-44585	-2003	-4023.36		43700	3.6438	10833	11053			5.52	Si
SLU 73	6.45	-36949	-2004	-4307.82		36215	3.6438	10384	10595			5.29	Si
SLU 84	4.35	-47400	-2056	-4178.69		46459	3.6438	10833	11053			5.38	Si
SLU 84	6.45	-39518	-2056	-4799.95		38733	3.6438	10720	10937			5.32	Si
SLU 76	4.35	-45710	-2072	-4027.81		44802	3.6438	10833	11053			5.33	Si
SLU 76	6.45	-37983	-2073	-4331.83		37229	3.6438	10519	10733			5.18	Si
SLU 72	4.35	-43310	-1973	-3909.4		42450	3.6438	10833	11053			5.6	Si
SLU 72	6.45	-35896	-1973	-3852.9		35183	3.6438	10247	10454			5.3	Si

Verifica a taglio nel piano secondo D.M. 17-01-18 (N.T.C.) §7.8.2.2.2 con rottura per scorrimento in combinazioni sismiche, γM = 2

Comb.	Quota	N	V par	M	σ0	σN	l'	fvd	Vt scorr.	Vt fess.diag.	Vt,lim	c.s.	Verifica
SLV 5	4.35	-18883	-10738	-12832.88		19679	3.4269	12269	11773			1.1	Si
SLV 5	6.45	-12157	-8876	-176.69		11916	3.6438	10716	10934			1.23	Si
SLV 8	4.35	-36680	8952	7735.95		35952	3.6438	15524	15838			1.77	Si
SLV 8	6.45	-34087	7281	-4491.59		33410	3.6438	15015	15320			2.1	Si
SLV 7	4.35	-36680	8952	7735.95		35952	3.6438	15524	15838			1.77	Si
SLV 7	6.45	-34087	7281	-4491.59		33410	3.6438	15015	15320			2.1	Si
SLV 10	4.35	-27190	-11649	-13919.1		26650	3.6438	13663	13940			1.2	Si
SLV 10	6.45	-18639	-9977	-1882.36		18269	3.6438	11987	12230			1.23	Si
SLV 6	4.35	-18883	-10738	-12832.88		19679	3.4269	12269	11773			1.1	Si
SLV 6	6.45	-12157	-8876	-176.69		11916	3.6438	10716	10934			1.23	Si
SLV 13	4.35	-43111	-5819	-7987.27		42254	3.6438	16250	16579			2.85	Si
SLV 13	6.45	-33876	-5606	-5382.53		33204	3.6438	14974	15277			2.73	Si
SLV 14	4.35	-43111	-5819	-7987.27		42254	3.6438	16250	16579			2.85	Si
SLV 14	6.45	-33876	-5606	-5382.53		33204	3.6438	14974	15277			2.73	Si
SLV 9	4.35	-27190	-11649	-13919.1		26650	3.6438	13663	13940			1.2	Si
SLV 9	6.45	-18639	-9977	-1882.36		18269	3.6438	11987	12230			1.23	Si
SLV 12	4.35	-44987	8042	6649.73		44094	3.6438	16250	16579			2.06	Si
SLV 12	6.45	-40569	6180	-6197.26		39763	3.6438	16250	16579			2.68	Si
SLV 11	4.35	-44987	8042	6649.73		44094	3.6438	16250	16579			2.06	Si
SLV 11	6.45	-40569	6180	-6197.26		39763	3.6438	16250	16579			2.68	Si

Verifica a pressoflessione fuori piano D.M. 17-01-18 (N.T.C.)

quota 6.125 Wa 0.05 denominatore 8 γM = 2

Comb.	fd	Sa	σ0	N	M	Mc	Coeff.s.	Verifica
SLV 2	143750	0.38	12809	-13069	370.74	1637.79	4.42	Si
SLV 1	143750	0.38	12809	-13069	370.74	1637.79	4.42	Si
SLV 6	143750	0.38	13102	-13368	370.74	1670.82	4.51	Si
SLV 5	143750	0.38	13102	-13368	370.74	1670.82	4.51	Si
SLV 3	143750	0.38	18924	-19308	370.74	2284.43	6.16	Si
SLV 4	143750	0.38	18924	-19308	370.74	2284.43	6.16	Si
SLV 10	143750	0.38	19469	-19864	370.74	2337.81	6.31	Si
SLV 9	143750	0.38	19469	-19864	370.74	2337.81	6.31	Si
SLV 8	143750	0.38	33487	-34165	370.74	3472.26	9.37	Si
SLV 7	143750	0.38	33487	-34165	370.74	3472.26	9.37	Si

Verifica dei meccanismi locali di collasso con analisi cinematica lineare

forza di aggancio al piano = 0 quota mezzeria = 6.125 Wa = 0.05 Ta = 0.0752

Comb.	N top	N base	V orto	α0	M*	e*	a0*	aLim	Verifica
SLV 14	-24772	-43111	-32	0.043	3033.9	0.951	0.65497	11.26714	No
SLV 13	-24772	-43111	-32	0.043	3033.9	0.951	0.65497	11.26714	No
SLV 16	-29290	-48450	-4	0.043	3492.9	0.957	0.65705	11.26714	No
SLV 15	-29290	-48450	-4	0.043	3492.9	0.957	0.65705	11.26714	No
SLV 4	-15394	-20759	31	0.045	2083.6	0.933	0.69615	11.26714	No
SLV 3	-15394	-20759	31	0.045	2083.6	0.933	0.69615	11.26714	No
SLV 11	-29697	-44987	41	0.042	3534.3	0.957	0.63892	9.97238	No
SLV 12	-29697	-44987	41	0.042	3534.3	0.957	0.63892	9.97238	No
SLV 8	-25528	-36680	52	0.042	3110.7	0.952	0.64268	9.97238	No
SLV 7	-25528	-36680	52	0.042	3110.7	0.952	0.64268	9.97238	No

Tabella dei coefficienti di sicurezza minimi

Stato limite	Coeff.s.	Comb.	Verifica
PF_SLU	7.459	SLU 83	Si
V_SLU	5.177	SLU 76	Si
PF_SLV	2.275	SLV 5	Si
V_SLV	1.096	SLV 5	Si
PFFP_SLV	4.418	SLV 1	Si
R_SLV	0.058	SLV 13	No

Maschio 171

Verifiche condotte secondo D.M. 17-01-18 (N.T.C.)

Dati geometrici

X ini.	Y ini.	X fin.	Y fin.	Quota i.	Quota.s	l	Sp.	h netta	h ini.	h fin.	a	a.s.,sx	a.s.,dx
-24.643	-3.254	-24.643	5.798	L5	L6	9.052	0.28	3.55	3.55	3.55			

Caratteristiche del materiale

(Circolare 7 21-01-19 C8.5.I) Muratura in mattoni pieni e malta di calce LC2_Corti

fb	fk	fvk0	fmedio	τ0	fv0	μ	ϕ	fv,lim	E	G	FC
600000			345000	9000	20000	0.58	0.77	32500	320000000	128000000	1.2

Verifica a pressoflessione nel piano secondo D.M. 17-01-18 NTC §7.8.2.2.1 in combinazioni non sismiche, γM = 3

Comb.	Quota	N	M	σ0	Mu	c.s.	Verifica
SLU 44	7.9	-54197	473.43	21383	180907.37	382.119	Si
SLU 44	11.45	-25987	2297.22	10253	102812.2	44.755	Si
SLU 68	7.9	-61336	885.12	24200	195136.65	220.463	Si
SLU 68	11.45	-29669	2300.46	11706	114987.84	49.985	Si
SLU 13	7.9	-49881	541.67	19680	171219.96	316.095	Si
SLU 13	11.45	-23905	1996.14	9432	95668.84	47.927	Si
SLU 23	7.9	-48545	298.18	19153	168055.33	563.6	Si
SLU 23	11.45	-23110	2014.42	9118	92889.03	46.112	Si
SLU 26	7.9	-50181	716	19799	171919.68	240.112	Si
SLU 26	11.45	-24256	2074.9	9570	96885.98	46.694	Si
SLU 5	7.9	-44679	722.12	17628	158458.38	219.434	Si
SLU 5	11.45	-21719	2132.13	8569	87960.63	41.255	Si
SLU 2	7.9	-43043	304.31	16982	154199.32	506.721	Si
SLU 2	11.45	-20573	2071.66	8117	83836.21	40.468	Si
SLU 10	7.9	-48245	123.86	19035	167334.08	1000	Si
SLU 10	11.45	-22759	1935.67	8980	91654.27	47.35	Si
SLU 47	7.9	-55834	891.25	22029	184366.24	206.863	Si
SLU 47	11.45	-27133	2357.7	10705	106664.61	45.241	Si
SLU 65	7.9	-59700	467.31	23554	192072.49	411.021	Si
SLU 65	11.45	-28523	2239.99	11254	111262.89	49.671	Si

Verifica a pressoflessione nel piano secondo D.M. 17-01-18 NTC §7.8.2.2.1 in combinazioni sismiche, γM = 2

Comb.	Quota	N	M	σ0	Mu	c.s.	Verifica
SLV 15	7.9	-29770	20726.25	11745	121787.26	5.876	Si
SLV 15	11.45	-17138	7070.67	6762	73276.57	10.363	Si
SLV 9	7.9	-38783	-34401.27	15302	153551.78	4.464	Si
SLV 9	11.45	-21656	1450.07	8544	91163.55	62.868	Si
SLV 11	7.9	-43770	40775.89	17269	170105.81	4.172	Si
SLV 11	11.45	-19988	3492.3	7886	84626.55	24.232	Si
SLV 12	7.9	-43770	40775.89	17269	170105.81	4.172	Si
SLV 12	11.45	-19988	3492.3	7886	84626.55	24.232	Si
SLV 16	7.9	-29770	20726.25	11745	121787.26	5.876	Si
SLV 16	11.45	-17138	7070.67	6762	73276.57	10.363	Si
SLV 10	7.9	-38783	-34401.27	15302	153551.78	4.464	Si
SLV 10	11.45	-21656	1450.07	8544	91163.55	62.868	Si

Comb.	Quota	N	M	σ0	Mu	c.s.	Verifica
SLV 6	7.9	-49287	-39769.01	19446	187573.78	4.717	Si
SLV 6	11.45	-24599	-2229.77	9705	102493.61	45.966	Si
SLV 5	7.9	-49287	-39769.01	19446	187573.78	4.717	Si
SLV 5	11.45	-24599	-2229.77	9705	102493.61	45.966	Si
SLV 8	7.9	-54274	35408.14	21413	202596.74	5.722	Si
SLV 8	11.45	-22931	-187.54	9047	96100.16	512.418	Si
SLV 7	7.9	-54274	35408.14	21413	202596.74	5.722	Si
SLV 7	11.45	-22931	-187.54	9047	96100.16	512.418	Si

Verifica a taglio nel piano secondo D.M. 17-01-18 (N.T.C.) §7.8.2.2.2 con rottura per scorrimento in combinazioni non sismiche, γM = 3

Comb.	Quota	N	V par	M	σ0	σN	l'	fvd	Vt scorr.	Vt fess.diag.	Vt,lim	c.s.	Verifica
SLU 5	7.9	-44679	-834	722.12		17628	9.0521	7906	20038			24.02	Si
SLU 5	11.45	-21719	-414	2132.13		8569	9.0521	6698	16977			40.97	Si
SLU 44	7.9	-54197	-867	473.43		21383	9.0521	8407	21307			24.59	Si
SLU 44	11.45	-25987	-446	2297.22		10253	9.0521	6923	17546			39.32	Si
SLU 10	7.9	-48245	-880	123.86		19035	9.0521	8094	20514			23.32	Si
SLU 10	11.45	-22759	-459	1935.67		8980	9.0521	6753	17116			37.31	Si
SLU 52	7.9	-59400	-883	292.98		23436	9.0521	8680	22001			24.92	Si
SLU 52	11.45	-28173	-462	2161.23		11115	9.0521	7038	17837			38.61	Si
SLU 23	7.9	-48545	-872	298.18		19153	9.0521	8109	20554			23.58	Si
SLU 23	11.45	-23110	-451	2014.42		9118	9.0521	6771	17162			38.07	Si
SLU 31	7.9	-53747	-888	117.73		21206	9.0521	8383	21247			23.93	Si
SLU 31	11.45	-25296	-467	1878.43		9980	9.0521	6886	17454			37.41	Si
SLU 2	7.9	-43043	-864	304.31		16982	9.0521	7820	19820			22.95	Si
SLU 2	11.45	-20573	-443	2071.66		8117	9.0521	6638	16824			37.99	Si
SLU 34	7.9	-55383	-858	535.55		21851	9.0521	8469	21465			25	Si
SLU 34	11.45	-26442	-438	1938.91		10433	9.0521	6947	17607			40.19	Si
SLU 13	7.9	-49881	-850	541.67		19680	9.0521	8180	20732			24.38	Si
SLU 13	11.45	-23905	-430	1996.14		9432	9.0521	6813	17268			40.14	Si
SLU 26	7.9	-50181	-842	716		19799	9.0521	8195	20772			24.66	Si
SLU 26	11.45	-24256	-422	2074.9		9570	9.0521	6832	17315			41	Si

Verifica a taglio nel piano secondo D.M. 17-01-18 (N.T.C.) §7.8.2.2.2 con rottura per scorrimento in combinazioni sismiche, γM = 2

Comb.	Quota	N	V par	M	σ0	σN	l'	fvd	Vt scorr.	Vt fess.diag.	Vt,lim	c.s.	Verifica
SLV 14	7.9	-28274	-5106	-1826.89		11155	9.0521	10564	26776			5.24	Si
SLV 14	11.45	-17639	-3309	6458.01		6959	9.0521	9725	24649			7.45	Si
SLV 5	7.9	-49287	-15675	-39769.01		19446	9.0521	12223	30979			1.98	Si
SLV 5	11.45	-24599	-10178	-2229.77		9705	9.0521	10274	26041			2.56	Si
SLV 11	7.9	-43770	15622	40775.89		17269	9.0521	11787	29876			1.91	Si
SLV 11	11.45	-19988	10124	3492.3		7886	9.0521	9911	25119			2.48	Si
SLV 6	7.9	-49287	-15675	-39769.01		19446	9.0521	12223	30979			1.98	Si
SLV 6	11.45	-24599	-10178	-2229.77		9705	9.0521	10274	26041			2.56	Si
SLV 10	7.9	-38783	-15887	-34401.27		15302	9.0521	11394	28878			1.82	Si
SLV 10	11.45	-21656	-10308	1450.07		8544	9.0521	10042	25453			2.47	Si
SLV 9	7.9	-38783	-15887	-34401.27		15302	9.0521	11394	28878			1.82	Si
SLV 9	11.45	-21656	-10308	1450.07		8544	9.0521	10042	25453			2.47	Si
SLV 8	7.9	-54274	15834	35408.14		21413	9.0521	12616	31976			2.02	Si
SLV 8	11.45	-22931	10255	-187.54		9047	9.0521	10143	25708			2.51	Si
SLV 12	7.9	-43770	15622	40775.89		17269	9.0521	11787	29876			1.91	Si
SLV 12	11.45	-19988	10124	3492.3		7886	9.0521	9911	25119			2.48	Si
SLV 13	7.9	-28274	-5106	-1826.89		11155	9.0521	10564	26776			5.24	Si
SLV 13	11.45	-17639	-3309	6458.01		6959	9.0521	9725	24649			7.45	Si
SLV 7	7.9	-54274	15834	35408.14		21413	9.0521	12616	31976			2.02	Si
SLV 7	11.45	-22931	10255	-187.54		9047	9.0521	10143	25708			2.51	Si

Verifica a pressoflessione fuori piano D.M. 17-01-18 (N.T.C.)

quota 9.675 Wa 0.05 denominatore 8 γM = 2

Comb.	fd	Sa	σ0	N	M	Mc	Coeff.s.	Verifica
SLV 13	143750	0.45	9713	-24619	1107.5	3172.64	2.86	Si
SLV 14	143750	0.45	9713	-24619	1107.5	3172.64	2.86	Si
SLV 15	143750	0.45	9804	-24849	1107.5	3199.72	2.89	Si
SLV 16	143750	0.45	9804	-24849	1107.5	3199.72	2.89	Si
SLV 10	143750	0.45	12111	-30696	1107.5	3871.49	3.5	Si
SLV 9	143750	0.45	12111	-30696	1107.5	3871.49	3.5	Si
SLV 12	143750	0.45	12414	-31463	1107.5	3957.33	3.57	Si
SLV 11	143750	0.45	12414	-31463	1107.5	3957.33	3.57	Si
SLV 5	143750	0.45	14257	-36135	1107.5	4468.65	4.03	Si
SLV 6	143750	0.45	14257	-36135	1107.5	4468.65	4.03	Si

Verifica dei meccanismi locali di collasso con analisi cinematica lineare

forza di aggancio al piano = 0 quota mezzeria = 9.675 Wa = 0.05 Ta = 0.0752

Comb.	N top	N base	V orto	α0	M*	e*	a0*	aLim	Verifica
SLV 1	-27449	-63287	225	0.042	4089.3	0.919	0.66549	12.98863	No
SLV 2	-27449	-63287	225	0.042	4089.3	0.919	0.66549	12.98863	No
SLV 4	-26948	-64783	184	0.043	4039.1	0.918	0.6851	12.98863	No
SLV 3	-26948	-64783	184	0.043	4039.1	0.918	0.6851	12.98863	No
SLV 16	-17138	-29770	-220	0.043	3064.1	0.902	0.69901	12.98863	No
SLV 15	-17138	-29770	-220	0.043	3064.1	0.902	0.69901	12.98863	No
SLV 13	-17639	-28274	-179	0.045	3113.3	0.903	0.72265	12.98863	No
SLV 14	-17639	-28274	-179	0.045	3113.3	0.903	0.72265	12.98863	No
SLV 5	-24599	-49287	131	0.045	3804.1	0.915	0.71791	11.49604	No
SLV 6	-24599	-49287	131	0.045	3804.1	0.915	0.71791	11.49604	No

Tabella dei coefficienti di sicurezza minimi

Stato limite	Coeff.s.	Comb.	Verifica
PF_SLU	40.468	SLU 2	Si
V_SLU	22.951	SLU 2	Si
PF_SLV	4.172	SLV 11	Si
V_SLV	1.818	SLV 9	Si

Stato limite	Coeff.s.	Comb.	Verifica
PFFP_SLV	2.865	SLV 13	Si
R_SLV	0.051	SLV 1	No

Maschio 172

Verifiche condotte secondo D.M. 17-01-18 (N.T.C.)

Dati geometrici

X ini.	Y ini.	X fin.	Y fin.	Quota i.	Quota.s	l	Sp.	h netta	h ini.	h fin.	a	a.s.,sx	a.s.,dx
-22.849	5.798	-24.643	5.798	L5	L6	1.794	0.28	3.55	3.55	3.55			

Caratteristiche del materiale

(Circolare 7 21-01-19 C8.5.I) Muratura in mattoni pieni e malta di calce LC2_Corti

fb	fk	fvk0	fmedio	τ0	fv0	μ	ϕ	fv,lim	E	G	FC
600000			345000	9000	20000	0.58	0.77	32500	320000000	128000000	1.2

Verifica a pressoflessione nel piano secondo D.M. 17-01-18 NTC §7.8.2.2.1 in combinazioni non sismiche, γM = 3

Comb.	Quota	N	M	σ0	Mu	c.s.	Verifica
SLU 83	8.8	-11358	878.77	22606	7362.5	8.378	Si
SLU 83	10.7	-12036	-1758.03	23955	7622.93	4.336	Si
SLU 77	8.8	-11737	882.84	23360	7510.46	8.507	Si
SLU 77	10.7	-12437	-1794.51	24754	7767.75	4.329	Si
SLU 37	8.8	-9616	817.94	19138	6600.28	8.069	Si
SLU 37	10.7	-10510	-1572.12	20919	7008.24	4.458	Si
SLU 78	8.8	-11718	897.55	23323	7503.37	8.36	Si
SLU 78	10.7	-12432	-1797.11	24743	7765.85	4.321	Si
SLU 76	8.8	-11074	847.93	22041	7247.24	8.547	Si
SLU 76	10.7	-11599	-1674.83	23086	7457.39	4.453	Si
SLU 79	8.8	-11556	896.35	23001	7440.78	8.301	Si
SLU 79	10.7	-12246	-1779.23	24374	7699.81	4.328	Si
SLU 84	8.8	-11340	893.48	22570	7355.1	8.232	Si
SLU 84	10.7	-12030	-1760.63	23944	7620.94	4.329	Si
SLU 38	8.8	-9597	832.65	19101	6591.47	7.916	Si
SLU 38	10.7	-10505	-1574.72	20908	7005.88	4.449	Si
SLU 42	8.8	-9399	815.07	18707	6496.16	7.97	Si
SLU 42	10.7	-10294	-1553.53	20489	6912.92	4.45	Si
SLU 80	8.8	-11538	911.06	22964	7433.55	8.159	Si
SLU 80	10.7	-12241	-1781.82	24364	7697.86	4.32	Si

Verifica a pressoflessione nel piano secondo D.M. 17-01-18 NTC §7.8.2.2.1 in combinazioni sismiche, γM = 2

Comb.	Quota	N	M	σ0	Mu	c.s.	Verifica
SLV 13	8.8	-5994	-902.08	11929	4852.58	5.379	Si
SLV 13	10.7	-3975	1263.13	7912	3335.67	2.641	Si
SLV 5	8.8	-2918	1078.78	5807	2493.47	2.311	Si
SLV 5	10.7	-3557	-196.98	7080	3006.47	15.263	Si
SLV 2	8.8	-6543	1971.1	13022	5244.51	2.661	Si
SLV 2	10.7	-8535	-2518.54	16987	6593	2.618	Si
SLV 6	8.8	-2918	1078.78	5807	2493.47	2.311	Si
SLV 6	10.7	-3557	-196.98	7080	3006.47	15.263	Si
SLV 9	8.8	-2753	216.83	5480	2359.37	10.881	Si
SLV 9	10.7	-2189	937.52	4357	1894.05	2.02	Si
SLV 4	8.8	-9485	1873.99	18878	7195.16	3.839	Si
SLV 4	10.7	-11434	-3373.95	22757	8347.9	2.474	Si
SLV 10	8.8	-2753	216.83	5480	2359.37	10.881	Si
SLV 10	10.7	-2189	937.52	4357	1894.05	2.02	Si
SLV 14	8.8	-5994	-902.08	11929	4852.58	5.379	Si
SLV 14	10.7	-3975	1263.13	7912	3335.67	2.641	Si
SLV 3	8.8	-9485	1873.99	18878	7195.16	3.839	Si
SLV 3	10.7	-11434	-3373.95	22757	8347.9	2.474	Si
SLV 1	8.8	-6543	1971.1	13022	5244.51	2.661	Si
SLV 1	10.7	-8535	-2518.54	16987	6593	2.618	Si

Verifica a taglio nel piano secondo D.M. 17-01-18 (N.T.C.) §7.8.2.2.2 con rottura per scorrimento in combinazioni non sismiche, γM = 3

Comb.	Quota	N	V par	M	σ0	σN	l'	fvd	Vt scorr.	Vt fess.diag.	Vt,lim	c.s.	Verifica
SLU 84	8.8	-11340	2762	893.48		22570	1.7944	8565	4303			1.56	Si
SLU 84	10.7	-12030	2758	-1760.63		23944	1.7944	8748	4395			1.59	Si
SLU 78	8.8	-11718	2794	897.55		23323	1.7944	8665	4354			1.56	Si
SLU 78	10.7	-12432	2790	-1797.11		24743	1.7944	8855	4449			1.59	Si
SLU 77	8.8	-11737	2776	882.84		23360	1.7944	8670	4356			1.57	Si
SLU 77	10.7	-12437	2776	-1794.51		24754	1.7944	8856	4450			1.6	Si
SLU 36	8.8	-9777	2507	819.14		19460	1.7944	8150	4095			1.63	Si
SLU 36	10.7	-10696	2503	-1590.01		21288	1.7944	8394	4217			1.68	Si
SLU 42	8.8	-9399	2475	815.07		18707	1.7944	8050	4044			1.63	Si
SLU 42	10.7	-10294	2471	-1553.53		20489	1.7944	8287	4164			1.69	Si
SLU 83	8.8	-11358	2744	878.77		22606	1.7944	8570	4306			1.57	Si
SLU 83	10.7	-12036	2744	-1758.03		23955	1.7944	8750	4396			1.6	Si
SLU 79	8.8	-11556	2770	896.35		23001	1.7944	8622	4332			1.56	Si
SLU 79	10.7	-12246	2770	-1779.23		24374	1.7944	8805	4424			1.6	Si
SLU 38	8.8	-9597	2501	832.65		19101	1.7944	8102	4071			1.63	Si
SLU 38	10.7	-10505	2497	-1574.72		20908	1.7944	8343	4192			1.68	Si
SLU 76	8.8	-11074	2616	847.93		22041	1.7944	8494	4268			1.63	Si
SLU 76	10.7	-11599	2609	-1674.83		23086	1.7944	8634	4338			1.66	Si
SLU 80	8.8	-11538	2788	911.06		22964	1.7944	8617	4330			1.55	Si
SLU 80	10.7	-12241	2784	-1781.82		24364	1.7944	8804	4423			1.59	Si

Verifica a taglio nel piano secondo D.M. 17-01-18 (N.T.C.) §7.8.2.2.2 con rottura per scorrimento in combinazioni sismiche, γM = 2

Comb.	Quota	N	V par	M	σ0	σN	I'	fvd	Vt scorr.	Vt fess.diag.	Vt,lim	c.s.	Verifica
SLV 14	8.8	-5994	-1742	-902.08		11929	1.7944	10719	5386			3.09	Si
SLV 14	10.7	-3975	-902	1263.13		8167	1.7384	9967	4851			5.38	Si
SLV 3	8.8	-9485	4920	1873.99		18878	1.7944	12109	6084			1.24	Si
SLV 3	10.7	-11434	4081	-3373.95		22757	1.7944	12885	6474			1.59	Si
SLV 4	8.8	-9485	4920	1873.99		18878	1.7944	12109	6084			1.24	Si
SLV 4	10.7	-11434	4081	-3373.95		22757	1.7944	12885	6474			1.59	Si
SLV 1	8.8	-6543	4074	1971.1		13070	1.7878	10947	5480			1.35	Si
SLV 1	10.7	-8535	3919	-2518.54		16987	1.7944	11731	5894			1.5	Si
SLV 13	8.8	-5994	-1742	-902.08		11929	1.7944	10719	5386			3.09	Si
SLV 13	10.7	-3975	-902	1263.13		8167	1.7384	9967	4851			5.38	Si
SLV 8	8.8	-12726	3873	755.08		25328	1.7944	13399	6732			1.74	Si
SLV 8	10.7	-13220	2581	-3048.35		26312	1.7944	13596	6831			2.65	Si
SLV 2	8.8	-6543	4074	1971.1		13070	1.7878	10947	5480			1.35	Si
SLV 2	10.7	-8535	3919	-2518.54		16987	1.7944	11731	5894			1.5	Si
SLV 5	8.8	-2918	1050	1078.78		6585	1.5825	9650	4276			4.07	Si
SLV 5	10.7	-3557	2044	-196.98		7080	1.7944	9749	4898			2.4	Si
SLV 7	8.8	-12726	3873	755.08		25328	1.7944	13399	6732			1.74	Si
SLV 7	10.7	-13220	2581	-3048.35		26312	1.7944	13596	6831			2.65	Si
SLV 6	8.8	-2918	1050	1078.78		6585	1.5825	9650	4276			4.07	Si
SLV 6	10.7	-3557	2044	-196.98		7080	1.7944	9749	4898			2.4	Si

Verifica a pressoflessione fuori piano D.M. 17-01-18 (N.T.C.)

quota 9.675 Wa 0.05 denominatore 8 γM = 2

Comb.	fd	Sa	σ0	N	M	Mc	Coeff.s.	Verifica
SLV 10	143750	0.45	5907	-2968	219.54	395.44	1.8	Si
SLV 9	143750	0.45	5907	-2968	219.54	395.44	1.8	Si
SLV 5	143750	0.45	7697	-3867	219.54	507.31	2.31	Si
SLV 6	143750	0.45	7697	-3867	219.54	507.31	2.31	Si
SLV 13	143750	0.45	10359	-5205	219.54	666.86	3.04	Si
SLV 14	143750	0.45	10359	-5205	219.54	666.86	3.04	Si
SLV 16	143750	0.45	15964	-8021	219.54	976.19	4.45	Si
SLV 15	143750	0.45	15964	-8021	219.54	976.19	4.45	Si
SLV 1	143750	0.45	16324	-8202	219.54	994.84	4.53	Si
SLV 2	143750	0.45	16324	-8202	219.54	994.84	4.53	Si

Verifica dei meccanismi locali di collasso con analisi cinematica lineare

forza di aggancio al piano = 0 quota mezzeria = 9.675 Wa = 0.05 Ta = 0.0752

Comb.	N top	N base	V orto	α0	M*	e*	a0*	aLim	Verifica
SLV 10	-2882	-2795	183	0.013	557.1	0.897	0.20574	11.49604	No
SLV 9	-2882	-2795	183	0.013	557.1	0.897	0.20574	11.49604	No
SLV 6	-3497	-4100	178	0.017	617.2	0.903	0.27194	11.49604	No
SLV 5	-3497	-4100	178	0.017	617.2	0.903	0.27194	11.49604	No
SLV 12	-8448	-12038	-179	0.028	1113.7	0.937	0.43378	11.49604	No
SLV 11	-8448	-12038	-179	0.028	1113.7	0.937	0.43378	11.49604	No
SLV 7	-9062	-13343	-184	0.028	1175.9	0.94	0.43552	11.49604	No
SLV 8	-9062	-13343	-184	0.028	1175.9	0.94	0.43552	11.49604	No
SLV 3	-7831	-11631	-63	0.04	1051.4	0.934	0.61467	12.98863	No
SLV 4	-7831	-11631	-63	0.04	1051.4	0.934	0.61467	12.98863	No

Tabella dei coefficienti di sicurezza minimi

Stato limite	Coeff.s.	Comb.	Verifica
PF_SLU	4.32	SLU 80	Si
V_SLU	1.553	SLU 80	Si
PF_SLV	2.02	SLV 9	Si
V_SLV	1.236	SLV 3	Si
PFFP_SLV	1.801	SLV 9	Si
R_SLV	0.018	SLV 9	No

Maschio 173

Verifiche condotte secondo D.M. 17-01-18 (N.T.C.)

Dati geometrici

X ini.	Y ini.	X fin.	Y fin.	Quota i.	Quota.s	l	Sp.	h netta	h ini.	h fin.	a	a.s.,sx	a.s.,dx
-19.687	5.798	-21.849	5.798	L5	L6	2.161	0.28	3.55	3.55	3.55			

Caratteristiche del materiale

(Circolare 7 21-01-19 C8.5.I) Muratura in mattoni pieni e malta di calce LC2_Corti

fb	fk	fvk0	fmedio	τ0	fv0	μ	ϕ	fv,lim	E	G	FC
600000			345000	9000	20000	0.58	0.77	32500	320000000	128000000	1.2

Verifica a pressoflessione nel piano secondo D.M. 17-01-18 NTC §7.8.2.2.1 in combinazioni non sismiche, γM = 3

Comb.	Quota	N	M	σ0	Mu	c.s.	Verifica
SLU 51	8.8	-13162	1443.36	21749	10427.03	7.224	Si
SLU 51	10.7	-9574	-270.13	15819	8337.42	30.864	Si
SLU 79	8.8	-15304	1604.95	25286	11404.88	7.106	Si
SLU 79	10.7	-11658	-212.79	19263	9619.66	45.208	Si
SLU 77	8.8	-15567	1608.48	25722	11511.37	7.157	Si
SLU 77	10.7	-11935	-188.6	19721	9775.9	51.833	Si
SLU 71	8.8	-14363	1544.32	23732	11000	7.123	Si
SLU 71	10.7	-10691	-257.23	17665	9048.54	35.177	Si
SLU 69	8.8	-14626	1547.85	24168	11117.37	7.182	Si
SLU 69	10.7	-10968	-233.04	18123	9216.53	39.549	Si
SLU 70	8.8	-14600	1558.45	24123	11105.54	7.126	Si
SLU 70	10.7	-10933	-247.09	18065	9195.45	37.215	Si

Comb.	Quota	N	M	σ0	Mu	c.s.	Verifica
SLU 72	8.8	-14336	1554.92	23688	10987.86	7.067	Si
SLU 72	10.7	-10656	-271.27	17607	9027.03	33.276	Si
SLU 78	8.8	-15540	1619.08	25678	11500.65	7.103	Si
SLU 78	10.7	-11900	-202.65	19663	9756.3	48.144	Si
SLU 59	8.8	-14103	1503.99	23303	10881.41	7.235	Si
SLU 59	10.7	-10541	-225.69	17417	8955.89	39.682	Si
SLU 80	8.8	-15277	1615.55	25242	11393.84	7.053	Si
SLU 80	10.7	-11623	-226.84	19205	9599.63	42.32	Si

Verifica a pressoflessione nel piano secondo D.M. 17-01-18 NTC §7.8.2.2.1 in combinazioni sismiche, γM = 2

Comb.	Quota	N	M	σ0	Mu	c.s.	Verifica
SLV 4	8.8	-14985	2900.87	24760	12913.09	4.451	Si
SLV 4	10.7	-9189	-2442.65	15183	8696.79	3.56	Si
SLV 2	8.8	-10678	2365.01	17644	9873.89	4.175	Si
SLV 2	10.7	-5976	-2421.52	9874	5936.55	2.452	Si
SLV 3	8.8	-14985	2900.87	24760	12913.09	4.451	Si
SLV 3	10.7	-9189	-2442.65	15183	8696.79	3.56	Si
SLV 13	8.8	-5208	-968.3	8606	5232.19	5.403	Si
SLV 13	10.7	-5851	2348.55	9667	5822.85	2.479	Si
SLV 14	8.8	-5208	-968.3	8606	5232.19	5.403	Si
SLV 14	10.7	-5851	2348.55	9667	5822.85	2.479	Si
SLV 5	8.8	-3739	573.17	6178	3836.62	6.694	Si
SLV 5	10.7	-2184	-727.35	3608	2290.37	3.149	Si
SLV 9	8.8	-2098	-426.82	3467	2203.1	5.162	Si
SLV 9	10.7	-2146	703.67	3546	2252.14	3.201	Si
SLV 1	8.8	-10678	2365.01	17644	9873.89	4.175	Si
SLV 1	10.7	-5976	-2421.52	9874	5936.55	2.452	Si
SLV 6	8.8	-3739	573.17	6178	3836.62	6.694	Si
SLV 6	10.7	-2184	-727.35	3608	2290.37	3.149	Si
SLV 10	8.8	-2098	-426.82	3467	2203.1	5.162	Si
SLV 10	10.7	-2146	703.67	3546	2252.14	3.201	Si

Verifica a taglio nel piano secondo D.M. 17-01-18 (N.T.C.) §7.8.2.2.2 con rottura per scorrimento in combinazioni non sismiche, γM = 3

Comb.	Quota	N	V par	M	σ0	σN	I'	fvd	Vt scorr.	Vt fess.diag.	Vt,lim	c.s.	Verifica
SLU 79	8.8	-15304	1511	1604.95		25286	2.1615	8927	5403			3.58	Si
SLU 79	10.7	-11658	1503	-212.79		19263	2.1615	8124	4917			3.27	Si
SLU 51	8.8	-13162	1453	1443.36		21749	2.1615	8455	5117			3.52	Si
SLU 51	10.7	-9574	1451	-270.13		15819	2.1615	7665	4639			3.2	Si
SLU 80	8.8	-15277	1528	1615.55		25242	2.1615	8921	5399			3.53	Si
SLU 80	10.7	-11623	1522	-226.84		19205	2.1615	8116	4912			3.23	Si
SLU 50	8.8	-13189	1436	1432.76		21793	2.1615	8461	5121			3.57	Si
SLU 50	10.7	-9609	1432	-256.08		15877	2.1615	7673	4643			3.24	Si
SLU 69	8.8	-14626	1505	1547.85		24168	2.1615	8778	5312			3.53	Si
SLU 69	10.7	-10968	1500	-233.04		18123	2.1615	7972	4825			3.22	Si
SLU 49	8.8	-13426	1433	1446.89		22184	2.1615	8513	5152			3.59	Si
SLU 49	10.7	-9851	1431	-245.95		16277	2.1615	7726	4676			3.27	Si
SLU 78	8.8	-15540	1508	1619.08		25678	2.1615	8979	5434			3.6	Si
SLU 78	10.7	-11900	1503	-202.65		19663	2.1615	8177	4949			3.29	Si
SLU 70	8.8	-14600	1522	1558.45		24123	2.1615	8772	5309			3.49	Si
SLU 70	10.7	-10933	1519	-247.09		18065	2.1615	7964	4820			3.17	Si
SLU 72	8.8	-14336	1542	1554.92		23688	2.1615	8714	5274			3.42	Si
SLU 72	10.7	-10656	1538	-271.27		17607	2.1615	7903	4783			3.11	Si
SLU 71	8.8	-14363	1525	1544.32		23732	2.1615	8720	5277			3.46	Si
SLU 71	10.7	-10691	1519	-257.23		17665	2.1615	7911	4788			3.15	Si

Verifica a taglio nel piano secondo D.M. 17-01-18 (N.T.C.) §7.8.2.2.2 con rottura per scorrimento in combinazioni sismiche, γM = 2

Comb.	Quota	N	V par	M	σ0	σN	I'	fvd	Vt scorr.	Vt fess.diag.	Vt,lim	c.s.	Verifica
SLV 8	8.8	-18095	5075	2359.39		29899	2.1615	14313	8662			1.71	Si
SLV 8	10.7	-12894	3627	-797.77		21304	2.1615	12594	7622			2.1	Si
SLV 3	8.8	-14985	5881	2900.87		24760	2.1615	13285	8040			1.37	Si
SLV 3	10.7	-9189	4822	-2442.65		15183	2.1615	11370	6881			1.43	Si
SLV 2	8.8	-10678	4085	2365.01		17644	2.1615	11862	7179			1.76	Si
SLV 2	10.7	-5976	3769	-2421.52		10532	2.0266	10440	5924			1.57	Si
SLV 10	8.8	-2098	-3395	-426.82		3467	2.1615	9027	5463			1.61	Si
SLV 10	10.7	-2146	-1962	703.67		3546	2.1615	9043	5473			2.79	Si
SLV 7	8.8	-18095	5075	2359.39		29899	2.1615	14313	8662			1.71	Si
SLV 7	10.7	-12894	3627	-797.77		21304	2.1615	12594	7622			2.1	Si
SLV 9	8.8	-2098	-3395	-426.82		3467	2.1615	9027	5463			1.61	Si
SLV 9	10.7	-2146	-1962	703.67		3546	2.1615	9043	5473			2.79	Si
SLV 4	8.8	-14985	5881	2900.87		24760	2.1615	13285	8040			1.37	Si
SLV 4	10.7	-9189	4822	-2442.65		15183	2.1615	11370	6881			1.43	Si
SLV 14	8.8	-5208	-4200	-968.3		8606	2.1615	10054	6085			1.45	Si
SLV 14	10.7	-5851	-3157	2348.55		10253	2.038	10384	5925			1.88	Si
SLV 13	8.8	-5208	-4200	-968.3		8606	2.1615	10054	6085			1.45	Si
SLV 13	10.7	-5851	-3157	2348.55		10253	2.038	10384	5925			1.88	Si
SLV 1	8.8	-10678	4085	2365.01		17644	2.1615	11862	7179			1.76	Si
SLV 1	10.7	-5976	3769	-2421.52		10532	2.0266	10440	5924			1.57	Si

Verifica a pressoflessione fuori piano D.M. 17-01-18 (N.T.C.)

quota 9.675 Wa 0.05 denominatore 8 γM = 2

Comb.	fd	Sa	σ0	N	M	Mc	Coeff.s.	Verifica
SLV 10	143750	0.45	4659	-2820	264.45	379.69	1.44	Si
SLV 9	143750	0.45	4659	-2820	264.45	379.69	1.44	Si
SLV 5	143750	0.45	5549	-3358	264.45	448.82	1.7	Si
SLV 6	143750	0.45	5549	-3358	264.45	448.82	1.7	Si
SLV 13	143750	0.45	10424	-6309	264.45	807.86	3.05	Si
SLV 14	143750	0.45	10424	-6309	264.45	807.86	3.05	Si
SLV 2	143750	0.45	13392	-8105	264.45	1010.3	3.82	Si
SLV 1	143750	0.45	13392	-8105	264.45	1010.3	3.82	Si
SLV 15	143750	0.45	16256	-9838	264.45	1194.09	4.52	Si

Comb.	fd	Sa	σ0	N	M	Mc	Coeff.s.	Verifica
SLV 16	143750	0.45	16256	-9838	264.45	1194.09	4.52	Si

Verifica dei meccanismi locali di collasso con analisi cinematica lineare

forza di aggancio al piano = 0 quota mezzeria = 9.675 Wa = 0.05 Ta = 0.0752

Comb.	N top	N base	V orto	α0	M*	e*	a0*	aLim	Verifica
SLV 5	-2249	-3936	350	0	554.5	0.889	0	11.49604	No
SLV 10	-1560	-3375	356	0	492.4	0.89	0	11.49604	No
SLV 9	-1560	-3375	356	0	492.4	0.89	0	11.49604	No
SLV 6	-2249	-3936	350	0	554.5	0.889	0	11.49604	No
SLV 11	-10451	-15931	-350	0.017	1369.3	0.938	0.26869	11.49604	No
SLV 12	-10451	-15931	-350	0.017	1369.3	0.938	0.26869	11.49604	No
SLV 8	-11139	-16492	-356	0.018	1439	0.941	0.27904	11.49604	No
SLV 7	-11139	-16492	-356	0.018	1439	0.941	0.27904	11.49604	No
SLV 13	-3868	-7115	116	0.033	709.7	0.9	0.52652	12.98863	No
SLV 14	-3868	-7115	116	0.033	709.7	0.9	0.52652	12.98863	No

Tabella dei coefficienti di sicurezza minimi

Stato limite	Coeff.s.	Comb.	Verifica
PF_SLU	7.053	SLU 80	Si
V_SLU	3.109	SLU 72	Si
PF_SLV	2.452	SLV 1	Si
V_SLV	1.367	SLV 3	Si
PFFP_SLV	1.436	SLV 9	Si
R_SLV	0	SLV 5	No

Maschio 174

Verifiche condotte secondo D.M. 17-01-18 (N.T.C.)

Dati geometrici

X ini.	Y ini.	X fin.	Y fin.	Quota i.	Quota.s	l	Sp.	h netta	h ini.	h fin.	a	a.s.,sx	a.s.,dx
-22.608	-3.254	-24.643	-3.254	L5	L6	2.035	0.28	3.55	3.55	3.55			

Caratteristiche del materiale

(Circolare 7 21-01-19 C8.5.I) Muratura in mattoni pieni e malta di calce LC2_Corti

fb	fk	fvk0	fmedio	τ0	fv0	μ	ϕ	fv,lim	E	G	FC
600000			345000	9000	20000	0.58	0.77	32500	320000000	128000000	1.2

Verifica a pressoflessione nel piano secondo D.M. 17-01-18 NTC §7.8.2.2.1 in combinazioni non sismiche, γM = 3

Comb.	Quota	N	M	σ0	Mu	c.s.	Verifica
SLU 82	8.8	-12088	658.01	21217	9095.65	13.823	Si
SLU 82	10.7	-11813	-1858.19	20733	8959.74	4.822	Si
SLU 76	8.8	-12397	608.38	21759	9243.99	15.194	Si
SLU 76	10.7	-12107	-1910.64	21249	9104.51	4.765	Si
SLU 34	8.8	-10299	562.46	18075	8153.01	14.495	Si
SLU 34	10.7	-10332	-1716.9	18133	8171.65	4.76	Si
SLU 73	8.8	-11963	563.84	20996	9033.96	16.022	Si
SLU 73	10.7	-11528	-1865.56	20232	8815.34	4.725	Si
SLU 84	8.8	-12523	702.55	21979	9303.29	13.242	Si
SLU 84	10.7	-12392	-1903.28	21750	9241.66	4.856	Si
SLU 31	8.8	-9864	517.92	17313	7903	15.259	Si
SLU 31	10.7	-9752	-1671.82	17117	7837.41	4.688	Si
SLU 75	8.8	-12431	627.75	21817	9259.83	14.751	Si
SLU 75	10.7	-12166	-1844.81	21352	9133.16	4.951	Si
SLU 10	8.8	-9033	381.3	15854	7401.67	19.412	Si
SLU 10	10.7	-8619	-1441.51	15127	7140.49	4.953	Si
SLU 40	8.8	-9990	612.09	17534	7976.27	13.031	Si
SLU 40	10.7	-10038	-1664.46	17618	8004.03	4.809	Si
SLU 42	8.8	-10424	656.63	18296	8223.88	12.524	Si
SLU 42	10.7	-10617	-1709.54	18634	8331.02	4.873	Si

Verifica a pressoflessione nel piano secondo D.M. 17-01-18 NTC §7.8.2.2.1 in combinazioni sismiche, γM = 2

Comb.	Quota	N	M	σ0	Mu	c.s.	Verifica
SLV 4	8.8	-8680	3166.6	15235	7730.52	2.441	Si
SLV 4	10.7	-10564	-3779.2	18542	9117.47	2.413	Si
SLV 13	8.8	-8071	-2385.28	14166	7259.72	3.044	Si
SLV 13	10.7	-5093	1687.76	8940	4802.98	2.846	Si
SLV 15	8.8	-5226	-2423.05	9172	4917.56	2.029	Si
SLV 15	10.7	-2642	2295.36	4636	2585.6	1.126	Si
SLV 1	8.8	-11526	3204.37	20230	9785.33	3.054	Si
SLV 1	10.7	-13016	-4386.8	22845	10767.06	2.454	Si
SLV 14	8.8	-8071	-2385.28	14166	7259.72	3.044	Si
SLV 14	10.7	-5093	1687.76	8940	4802.98	2.846	Si
SLV 12	8.8	-3115	-510.74	5467	3027.47	5.928	Si
SLV 12	10.7	-2554	878.13	4483	2503.3	2.851	Si
SLV 3	8.8	-8680	3166.6	15235	7730.52	2.441	Si
SLV 3	10.7	-10564	-3779.2	18542	9117.47	2.413	Si
SLV 11	8.8	-3115	-510.74	5467	3027.47	5.928	Si
SLV 11	10.7	-2554	878.13	4483	2503.3	2.851	Si
SLV 2	8.8	-11526	3204.37	20230	9785.33	3.054	Si
SLV 2	10.7	-13016	-4386.8	22845	10767.06	2.454	Si
SLV 16	8.8	-5226	-2423.05	9172	4917.56	2.029	Si
SLV 16	10.7	-2642	2295.36	4636	2585.6	1.126	Si

Verifica a taglio nel piano secondo D.M. 17-01-18 (N.T.C.) §7.8.2.2.2 con rottura per scorrimento in combinazioni non sismiche, γM = 3

Comb.	Quota	N	V par	M	σ0	σN	l'	fvd	Vt scorr.	Vt fess.diag.	Vt,lim	c.s.	Verifica
SLU 82	8.8	-12088	2595	658.01		21217	2.0348	8384	4777			1.84	Si
SLU 82	10.7	-11813	2564	-1858.19		20733	2.0348	8320	4740			1.85	Si
SLU 78	8.8	-12865	2702	672.29		22580	2.0348	8566	4881			1.81	Si
SLU 78	10.7	-12745	2671	-1889.89		22369	2.0348	8538	4865			1.82	Si
SLU 81	8.8	-11842	2521	703.83		20784	2.0348	8327	4744			1.88	Si
SLU 81	10.7	-11583	2522	-1687.6		20330	2.0348	8266	4710			1.87	Si
SLU 84	8.8	-12523	2720	702.55		21979	2.0348	8486	4835			1.78	Si
SLU 84	10.7	-12392	2688	-1903.28		21750	2.0348	8456	4818			1.79	Si
SLU 77	8.8	-12618	2628	718.11		22147	2.0348	8508	4848			1.84	Si
SLU 77	10.7	-12515	2629	-1719.3		21966	2.0348	8484	4834			1.84	Si
SLU 79	8.8	-12421	2601	729.29		21800	2.0348	8462	4821			1.85	Si
SLU 79	10.7	-12303	2602	-1671.4		21593	2.0348	8435	4806			1.85	Si
SLU 83	8.8	-12276	2646	748.37		21547	2.0348	8428	4802			1.82	Si
SLU 83	10.7	-12163	2646	-1732.69		21347	2.0348	8402	4787			1.81	Si
SLU 42	8.8	-10424	2451	656.63		18296	2.0348	7995	4555			1.86	Si
SLU 42	10.7	-10617	2420	-1709.54		18634	2.0348	8040	4581			1.89	Si
SLU 80	8.8	-12667	2675	683.47		22233	2.0348	8520	4854			1.81	Si
SLU 80	10.7	-12533	2644	-1842		21996	2.0348	8488	4836			1.83	Si
SLU 76	8.8	-12397	2600	608.38		21759	2.0348	8457	4818			1.85	Si
SLU 76	10.7	-12107	2548	-1910.64		21249	2.0348	8389	4780			1.88	Si

Verifica a taglio nel piano secondo D.M. 17-01-18 (N.T.C.) §7.8.2.2.2 con rottura per scorrimento in combinazioni sismiche, γM = 2

Comb.	Quota	N	V par	M	σ0	σN	l'	fvd	Vt scorr.	Vt fess.diag.	Vt,lim	c.s.	Verifica
SLV 14	8.8	-8071	-3138	-2385.28		14166	2.0348	11167	6362			2.03	Si
SLV 14	10.7	-5093	-2942	1687.76		8940	2.0348	10121	5767			1.96	Si
SLV 1	8.8	-11526	6345	3204.37		20230	2.0348	12379	7053			1.11	Si
SLV 1	10.7	-13016	4995	-4386.8		22845	2.0348	12902	7351			1.47	Si
SLV 8	8.8	-4151	2741	1166.16		7286	2.0348	9791	5578			2.04	Si
SLV 8	10.7	-4931	4433	-944.23		8655	2.0348	10064	5734			1.29	Si
SLV 16	8.8	-5226	-3270	-2423.05		11234	1.6612	10580	4921			1.5	Si
SLV 16	10.7	-2642	-1919	2295.36		21179	0.4454	12569	1568			0.82	No, Vu<V
SLV 4	8.8	-8680	6213	3166.6		15834	1.9579	11500	6305			1.01	Si
SLV 4	10.7	-10564	6018	-3779.2		19064	1.9791	12146	6731			1.12	Si
SLV 2	8.8	-11526	6345	3204.37		20230	2.0348	12379	7053			1.11	Si
SLV 2	10.7	-13016	4995	-4386.8		22845	2.0348	12902	7351			1.47	Si
SLV 13	8.8	-8071	-3138	-2385.28		14166	2.0348	11167	6362			2.03	Si
SLV 13	10.7	-5093	-2942	1687.76		8940	2.0348	10121	5767			1.96	Si
SLV 3	8.8	-8680	6213	3166.6		15834	1.9579	11500	6305			1.01	Si
SLV 3	10.7	-10564	6018	-3779.2		19064	1.9791	12146	6731			1.12	Si
SLV 15	8.8	-5226	-3270	-2423.05		11234	1.6612	10580	4921			1.5	Si
SLV 15	10.7	-2642	-1919	2295.36		21179	0.4454	12569	1568			0.82	No, Vu<V
SLV 7	8.8	-4151	2741	1166.16		7286	2.0348	9791	5578			2.04	Si
SLV 7	10.7	-4931	4433	-944.23		8655	2.0348	10064	5734			1.29	Si

Verifica a pressoflessione fuori piano D.M. 17-01-18 (N.T.C.)

quota 9.675 Wa 0.05 denominatore 8 γM = 2

Comb.	fd	Sa	σ0	N	M	Mc	Coeff.s.	Verifica
SLV 12	143750	0.45	6876	-3918	248.96	517.64	2.08	Si
SLV 11	143750	0.45	6876	-3918	248.96	517.64	2.08	Si
SLV 16	143750	0.45	7630	-4347	248.96	570.6	2.29	Si
SLV 15	143750	0.45	7630	-4347	248.96	570.6	2.29	Si
SLV 8	143750	0.45	10003	-5699	248.96	732.59	2.94	Si
SLV 7	143750	0.45	10003	-5699	248.96	732.59	2.94	Si
SLV 13	143750	0.45	11402	-6497	248.96	824.65	3.31	Si
SLV 14	143750	0.45	11402	-6497	248.96	824.65	3.31	Si
SLV 3	143750	0.45	18052	-10286	248.96	1227.23	4.93	Si
SLV 4	143750	0.45	18052	-10286	248.96	1227.23	4.93	Si

Verifica dei meccanismi locali di collasso con analisi cinematica lineare

forza di aggancio al piano = 0 quota mezzeria = 9.675 Wa = 0.05 Ta = 0.0752

Comb.	N top	N base	V orto	α0	M*	e*	a0*	aLim	Verifica
SLV 1	-9069	-14512	-64	0.04	1211.3	0.935	0.62409	12.98863	No
SLV 2	-9069	-14512	-64	0.04	1211.3	0.935	0.62409	12.98863	No
SLV 4	-7283	-11456	-44	0.042	1031.1	0.926	0.6662	12.98863	No
SLV 3	-7283	-11456	-44	0.042	1031.1	0.926	0.6662	12.98863	No
SLV 15	-3603	-3017	61	0.041	664.4	0.9	0.66991	12.98863	No
SLV 16	-3603	-3017	61	0.041	664.4	0.9	0.66991	12.98863	No
SLV 14	-5389	-6074	41	0.044	841.1	0.914	0.69492	12.98863	No
SLV 13	-5389	-6074	41	0.044	841.1	0.914	0.69492	12.98863	No
SLV 5	-9865	-15125	-50	0.041	1291.8	0.938	0.63949	11.49604	No
SLV 6	-9865	-15125	-50	0.041	1291.8	0.938	0.63949	11.49604	No

Tabella dei coefficienti di sicurezza minimi

Stato limite	Coeff.s.	Comb.	Verifica
PF_SLU	4.688	SLU 31	Si
V_SLU	1.778	SLU 84	Si
PF_SLV	1.126	SLV 15	Si
V_SLV	0.817	SLV 15	No
PFFP_SLV	2.079	SLV 11	Si
R_SLV	0.048	SLV 1	No

Maschio 175

Verifiche condotte secondo D.M. 17-01-18 (N.T.C.)

Dati geometrici

X ini.	Y ini.	X fin.	Y fin.	Quota i.	Quota.s	l	Sp.	h netta	h ini.	h fin.	a	a.s.,sx	a.s.,dx
-19.303	-3.254	-21.608	-3.254	L5	L6	2.305	0.28	3.55	3.55	3.55			

Caratteristiche del materiale

(Circolare 7 21-01-19 C8.5.I) Muratura in mattoni pieni e malta di calce LC2_Corti

fb	fk	fvk0	fmedio	τ0	fv0	μ	ϕ	fv,lim	E	G	FC
600000			345000	9000	20000	0.58	0.77	32500	320000000	128000000	1.2

Verifica a pressoflessione nel piano secondo D.M. 17-01-18 NTC §7.8.2.2.1 in combinazioni non sismiche, γM = 3

Comb.	Quota	N	M	σ0	Mu	c.s.	Verifica
SLU 29	9.9	-10569	-480.83	16376	9732.02	20.24	Si
SLU 29	10.7	-9525	-516.66	14758	8988.61	17.397	Si
SLU 18	9.9	-9902	-529.55	15343	9262.83	17.492	Si
SLU 18	10.7	-8872	-351.32	13746	8499.19	24.192	Si
SLU 62	9.9	-12548	-630.97	19442	11009.95	17.449	Si
SLU 62	10.7	-11213	-499.19	17373	10166.61	20.366	Si
SLU 74	9.9	-13577	-687.46	21037	11606.85	16.884	Si
SLU 74	10.7	-12229	-548.32	18948	10815.47	19.725	Si
SLU 64	9.9	-11717	-599.94	18154	10494.23	17.492	Si
SLU 64	10.7	-10368	-426.65	16065	9592.84	22.484	Si
SLU 81	9.9	-13176	-699.83	20415	11379.58	16.26	Si
SLU 81	10.7	-11827	-480.33	18325	10564.46	21.994	Si
SLU 60	9.9	-12049	-636.86	18669	10703.76	16.807	Si
SLU 60	10.7	-10714	-419.9	16600	9831.19	23.413	Si
SLU 39	9.9	-11029	-592.52	17089	10044.73	16.953	Si
SLU 39	10.7	-9985	-411.76	15472	9322.41	22.641	Si
SLU 83	9.9	-13675	-693.93	21189	11661.09	16.804	Si
SLU 83	10.7	-12327	-559.62	19099	10875.5	19.434	Si
SLU 77	9.9	-14077	-681.57	21811	11879.57	17.43	Si
SLU 77	10.7	-12728	-627.61	19721	11117.72	17.714	Si

Verifica a pressoflessione nel piano secondo D.M. 17-01-18 NTC §7.8.2.2.1 in combinazioni sismiche, γM = 2

Comb.	Quota	N	M	σ0	Mu	c.s.	Verifica
SLV 3	9.9	-7178	902.87	11121	7519.51	8.328	Si
SLV 3	10.7	-6051	-4855.06	9376	6439.17	1.326	Si
SLV 4	9.9	-7178	902.87	11121	7519.51	8.328	Si
SLV 4	10.7	-6051	-4855.06	9376	6439.17	1.326	Si
SLV 12	9.9	-5144	-1658.13	7971	5542.1	3.342	Si
SLV 12	10.7	-3932	1474.72	6092	4305.43	2.919	Si
SLV 13	9.9	-10936	-1838.13	16945	10856.21	5.906	Si
SLV 13	10.7	-9994	4203.76	15484	10058.17	2.393	Si
SLV 1	9.9	-9642	1331.87	14939	9753.72	7.323	Si
SLV 1	10.7	-8629	-5098.11	13370	8856.62	1.737	Si
SLV 11	9.9	-5144	-1658.13	7971	5542.1	3.342	Si
SLV 11	10.7	-3932	1474.72	6092	4305.43	2.919	Si
SLV 14	9.9	-10936	-1838.13	16945	10856.21	5.906	Si
SLV 14	10.7	-9994	4203.76	15484	10058.17	2.393	Si
SLV 15	9.9	-8472	-2267.13	13127	8715.23	3.844	Si
SLV 15	10.7	-7416	4446.81	11491	7743.55	1.741	Si
SLV 16	9.9	-8472	-2267.13	13127	8715.23	3.844	Si
SLV 16	10.7	-7416	4446.81	11491	7743.55	1.741	Si
SLV 2	9.9	-9642	1331.87	14939	9753.72	7.323	Si
SLV 2	10.7	-8629	-5098.11	13370	8856.62	1.737	Si

Verifica a taglio nel piano secondo D.M. 17-01-18 (N.T.C.) §7.8.2.2.2 con rottura per scorrimento in combinazioni non sismiche, γM = 3

Comb.	Quota	N	V par	M	σ0	σN	l'	fvd	Vt scorr.	Vt fess.diag.	Vt,lim	c.s.	Verifica
SLU 28	9.9	-11274	150	-323.24		17468	2.305	7885	5089			33.95	Si
SLU 28	10.7	-10230	150	-371.55		15850	2.305	7669	4950			33.02	Si
SLU 9	9.9	-9806	178	-236.78		15194	2.305	7581	4893			27.53	Si
SLU 9	10.7	-8776	178	-306.32		13597	2.305	7369	4756			26.76	Si
SLU 30	9.9	-10934	173	-299.74		16941	2.305	7814	5043			29.11	Si
SLU 30	10.7	-9890	173	-366.75		15323	2.305	7599	4904			28.31	Si
SLU 17	9.9	-10828	137	-306.7		16777	2.305	7792	5029			36.63	Si
SLU 17	10.7	-9797	137	-343.89		15180	2.305	7580	4892			35.63	Si
SLU 81	9.9	-13176	-157	-699.83		20415	2.305	8278	5342			33.99	Si
SLU 81	10.7	-11827	-157	-480.33		18325	2.305	7999	5163			32.84	Si
SLU 60	9.9	-12049	-153	-636.86		18669	2.305	8045	5192			34	Si
SLU 60	10.7	-10714	-153	-419.9		16600	2.305	7769	5014			32.84	Si
SLU 51	9.9	-11953	157	-344.09		18520	2.305	8025	5179			32.99	Si
SLU 51	10.7	-10618	157	-374.89		16451	2.305	7749	5001			31.85	Si
SLU 7	9.9	-10146	154	-260.28		15721	2.305	7652	4938			31.99	Si
SLU 7	10.7	-9116	154	-311.12		14124	2.305	7439	4801			31.1	Si
SLU 72	9.9	-13080	153	-407.05		20267	2.305	8258	5330			34.94	Si
SLU 72	10.7	-11731	153	-435.33		18177	2.305	7979	5150			33.76	Si
SLU 8	9.9	-9442	139	-417.86		14629	2.305	7506	4844			34.91	Si
SLU 8	10.7	-8411	139	-456.23		13032	2.305	7293	4707			33.92	Si

Verifica a taglio nel piano secondo D.M. 17-01-18 (N.T.C.) §7.8.2.2.2 con rottura per scorrimento in combinazioni sismiche, γM = 2

Comb.	Quota	N	V par	M	σ0	σN	l'	fvd	Vt scorr.	Vt fess.diag.	Vt,lim	c.s.	Verifica
SLV 4	9.9	-7178	7408	902.87		11121	2.305	10558	6814			0.92	No, Vu<V
SLV 4	10.7	-6051	7116	-4855.06		20571	1.0506	12447	3662			0.51	No, Vu<V
SLV 16	9.9	-8472	-8780	-2267.13		13127	2.305	10959	7073			0.81	No, Vu<V
SLV 16	10.7	-7416	-8259	4446.81		15968	1.6587	11527	5354			0.65	No, Vu<V
SLV 12	9.9	-5144	-4511	-1658.13		7971	2.305	9927	6407			1.42	Si
SLV 12	10.7	-3932	-4008	1474.72		6092	2.305	9552	6165			1.54	Si
SLV 15	9.9	-8472	-8780	-2267.13		13127	2.305	10959	7073			0.81	No, Vu<V
SLV 15	10.7	-7416	-8259	4446.81		15968	1.6587	11527	5354			0.65	No, Vu<V
SLV 1	9.9	-9642	8606	1331.87		14939	2.305	11321	7307			0.85	No, Vu<V
SLV 1	10.7	-8629	8085	-5098.11		18289	1.685	11991	5658			0.7	No, Vu<V

Comb.	Quota	N	V par	M	σ0	σN	l'	fvd	Vt scorr.	Vt fess.diag.	Vt,lim	c.s.	Verifica
SLV 13	9.9	-10936	-7583	-1838.13		16945	2.305	11722	7566			1	No, Vu<V
SLV 13	10.7	-9994	-7291	4203.76		16256	2.1956	11585	7122			0.98	No, Vu<V
SLV 3	9.9	-7178	7408	902.87		11121	2.305	10558	6814			0.92	No, Vu<V
SLV 3	10.7	-6051	7116	-4855.06		20571	1.0506	12447	3662			0.51	No, Vu<V
SLV 14	9.9	-10936	-7583	-1838.13		16945	2.305	11722	7566			1	No, Vu<V
SLV 14	10.7	-9994	-7291	4203.76		16256	2.1956	11585	7122			0.98	No, Vu<V
SLV 2	9.9	-9642	8606	1331.87		14939	2.305	11321	7307			0.85	No, Vu<V
SLV 2	10.7	-8629	8085	-5098.11		18289	1.685	11991	5658			0.7	No, Vu<V
SLV 11	9.9	-5144	-4511	-1658.13		7971	2.305	9927	6407			1.42	Si
SLV 11	10.7	-3932	-4008	1474.72		6092	2.305	9552	6165			1.54	Si

Verifica a pressoflessione fuori piano D.M. 17-01-18 (N.T.C.)

quota 9.675 Wa 0.05 denominatore 8 γM = 2

Comb.	fd	Sa	σ0	N	M	Mc	Coeff.s.	Verifica
SLV 12	143750	0.45	6417	-4142	282.01	549.37	1.95	Si
SLV 11	143750	0.45	6417	-4142	282.01	549.37	1.95	Si
SLV 8	143750	0.45	7207	-4652	282.01	612.81	2.17	Si
SLV 7	143750	0.45	7207	-4652	282.01	612.81	2.17	Si
SLV 15	143750	0.45	10012	-6462	282.01	830.51	2.94	Si
SLV 16	143750	0.45	10012	-6462	282.01	830.51	2.94	Si
SLV 4	143750	0.45	12646	-8162	282.01	1024.4	3.63	Si
SLV 3	143750	0.45	12646	-8162	282.01	1024.4	3.63	Si
SLV 13	143750	0.45	13883	-8960	282.01	1111.92	3.94	Si
SLV 14	143750	0.45	13883	-8960	282.01	1111.92	3.94	Si

Verifica dei meccanismi locali di collasso con analisi cinematica lineare

forza di aggancio al piano = 0 quota mezzeria = 9.675 Wa = 0.05 Ta = 0.0752

Comb.	N top	N base	V orto	α0	M*	e*	a0*	aLim	Verifica
SLV 11	-3152	-3346	-337	0	662.5	0.893	0	11.49604	No
SLV 12	-3152	-3346	-337	0	662.5	0.893	0	11.49604	No
SLV 7	-3140	-4389	-299	0	661.4	0.893	0	11.49604	No
SLV 8	-3140	-4389	-299	0	661.4	0.893	0	11.49604	No
SLV 6	-9485	-14200	331	0.018	1292.4	0.932	0.27839	11.49604	No
SLV 5	-9485	-14200	331	0.018	1292.4	0.932	0.27839	11.49604	No
SLV 9	-9496	-13157	292	0.021	1293.6	0.932	0.33038	11.49604	No
SLV 10	-9496	-13157	292	0.021	1293.6	0.932	0.33038	11.49604	No
SLV 16	-5385	-5563	-162	0.029	881.2	0.909	0.45816	12.98863	No
SLV 15	-5385	-5563	-162	0.029	881.2	0.909	0.45816	12.98863	No

Tabella dei coefficienti di sicurezza minimi

Stato limite	Coeff.s.	Comb.	Verifica
PF_SLU	16.26	SLU 81	Si
V_SLU	26.757	SLU 9	Si
PF_SLV	1.326	SLV 3	Si
V_SLV	0.515	SLV 3	No
PFFP_SLV	1.948	SLV 11	Si
R_SLV	0	SLV 7	No

Maschio 176

Verifiche condotte secondo D.M. 17-01-18 (N.T.C.)

Dati geometrici

X ini.	Y ini.	X fin.	Y fin.	Quota i.	Quota.s	l	Sp.	h netta	h ini.	h fin.	a	a.s.,sx	a.s.,dx
-18.275	-3.254	-18.803	-3.254	L5	L6	0.529	0.28	3.55	3.55	3.55			

Caratteristiche del materiale

(Circolare 7 21-01-19 C8.5.I) Muratura in mattoni pieni e malta di calce LC2_Corti

fb	fk	fvk0	fmedio	τ0	fv0	μ	ϕ	fv,lim	E	G	FC
600000			345000	9000	20000	0.58	0.77	32500	320000000	128000000	1.2

Verifica a pressoflessione nel piano secondo D.M. 17-01-18 NTC §7.8.2.2.1 in combinazioni non sismiche, γM = 3

Comb.	Quota	N	M	σ0	Mu	c.s.	Verifica
SLU 47	9.9	-3095	83.1	20908	608.27	7.32	Si
SLU 47	10.7	-2943	40.23	19880	588.17	14.619	Si
SLU 49	9.9	-3386	83.48	22875	643.86	7.713	Si
SLU 49	10.7	-3274	37.13	22115	630.56	16.983	Si
SLU 44	9.9	-2929	73.58	19786	586.29	7.969	Si
SLU 44	10.7	-2767	53.43	18689	563.63	10.549	Si
SLU 51	9.9	-3300	84.52	22290	633.67	7.497	Si
SLU 51	10.7	-3180	29.59	21483	619.05	20.924	Si
SLU 7	9.9	-2771	71.06	18715	564.18	7.94	Si
SLU 7	10.7	-2693	26.38	18193	553	20.963	Si
SLU 68	9.9	-3408	82.66	23017	646.3	7.818	Si
SLU 68	10.7	-3296	51.82	22260	633.14	12.219	Si
SLU 5	9.9	-2480	70.68	16748	520.72	7.368	Si
SLU 5	10.7	-2362	29.48	15957	502.19	17.033	Si
SLU 9	9.9	-2684	72.1	18130	551.65	7.651	Si
SLU 9	10.7	-2600	18.84	17560	539.11	28.619	Si
SLU 72	9.9	-3612	84.09	24399	668.9	7.955	Si
SLU 72	10.7	-3533	41.17	23863	660.36	16.039	Si
SLU 26	9.9	-2792	70.24	18858	567.19	8.075	Si
SLU 26	10.7	-2715	41.07	18338	556.14	13.542	Si

Verifica a pressoflessione nel piano secondo D.M. 17-01-18 NTC §7.8.2.2.1 in combinazioni sismiche, γM = 2

Comb.	Quota	N	M	σ0	Mu	c.s.	Verifica
SLV 11	9.9	-729	-506.32	0	0	0	No, e>l/2
SLV 11	10.7	-2954	269.11	19952	653.37	2.428	Si
SLV 10	9.9	-3052	168.26	20617	670.77	3.987	Si
SLV 10	10.7	-767	645.21	0	0	0	No, e>l/2
SLV 14	9.9	-622	-554.83	0	0	0	No, e>l/2
SLV 14	10.7	56	1453.01	0	0	0	No, Trazione
SLV 1	9.9	-5243	836.54	35414	984.31	1.177	Si
SLV 1	10.7	-4482	-1231.09	0	0	0	No, e>l/2
SLV 12	9.9	-729	-506.32	0	0	0	No, e>l/2
SLV 12	10.7	-2954	269.11	19952	653.37	2.428	Si
SLV 16	9.9	75	-757.2	0	0	0	No, Trazione
SLV 16	10.7	-600	1340.18	0	0	0	No, e>l/2
SLV 15	9.9	75	-757.2	0	0	0	No, Trazione
SLV 15	10.7	-600	1340.18	0	0	0	No, e>l/2
SLV 2	9.9	-5243	836.54	35414	984.31	1.177	Si
SLV 2	10.7	-4482	-1231.09	0	0	0	No, e>l/2
SLV 13	9.9	-622	-554.83	0	0	0	No, e>l/2
SLV 13	10.7	56	1453.01	0	0	0	No, Trazione
SLV 9	9.9	-3052	168.26	20617	670.77	3.987	Si
SLV 9	10.7	-767	645.21	0	0	0	No, e>l/2

Verifica a taglio nel piano secondo D.M. 17-01-18 (N.T.C.) §7.8.2.2.2 con rottura per scorrimento in combinazioni non sismiche, γM = 3

Comb.	Quota	N	V par	M	σ0	σN	l'	fvd	Vt scorr.	Vt fess.diag.	Vt,lim	c.s.	Verifica
SLU 74	9.9	-3888	-53	57.48		26260	0.5287	9057	1341			25.21	Si
SLU 74	10.7	-3898	-53	73.32		26331	0.5287	9066	1342			25.18	Si
SLU 81	9.9	-3762	-78	47.33		25415	0.5287	8944	1324			16.99	Si
SLU 81	10.7	-3781	-78	82.23		25539	0.5287	8961	1327			17	Si
SLU 32	9.9	-3272	-52	45.06		22101	0.5287	8502	1259			24.25	Si
SLU 32	10.7	-3317	-52	62.58		22408	0.5287	8543	1265			24.31	Si
SLU 9	9.9	-2684	51	72.1		18130	0.5287	7973	1180			23.32	Si
SLU 9	10.7	-2600	52	18.84		17560	0.5287	7897	1169			22.34	Si
SLU 39	9.9	-3147	-77	34.91		21255	0.5287	8390	1242			16.2	Si
SLU 39	10.7	-3200	-77	71.48		21616	0.5287	8438	1249			16.28	Si
SLU 82	9.9	-3705	-55	59.47		25025	0.5287	8892	1316			23.93	Si
SLU 82	10.7	-3689	-53	78.4		24921	0.5287	8878	1314			24.67	Si
SLU 60	9.9	-3450	-58	47.76		23305	0.5287	8663	1283			22.04	Si
SLU 60	10.7	-3428	-58	70.64		23158	0.5287	8643	1280			21.96	Si
SLU 40	9.9	-3089	-54	47.05		20865	0.5287	8338	1234			22.96	Si
SLU 40	10.7	-3109	-52	67.65		20998	0.5287	8355	1237			23.79	Si
SLU 51	9.9	-3300	49	84.52		22290	0.5287	8528	1262			25.58	Si
SLU 51	10.7	-3180	51	29.59		21483	0.5287	8420	1247			24.42	Si
SLU 18	9.9	-2834	-57	35.34		19146	0.5287	8108	1200			21.09	Si
SLU 18	10.7	-2848	-57	59.9		19236	0.5287	8120	1202			21.1	Si

Verifica a taglio nel piano secondo D.M. 17-01-18 (N.T.C.) §7.8.2.2.2 con rottura per scorrimento in combinazioni sismiche, γM = 2

Comb.	Quota	N	V par	M	σ0	σN	l'	fvd	Vt scorr.	Vt fess.diag.	Vt,lim	c.s.	Verifica
SLV 11	9.9	-729	-1359	-506.32		0	0	8333	0			0	No, Vu<V
SLV 11	10.7	-2954	-1034	269.11		20295	0.5198	12392	1804			1.74	Si
SLV 13	9.9	-622	-2451	-554.83		0	0	8333	0			0	No, Vu<V
SLV 13	10.7	56	-2513	1453.01		0	0	8333	0			0	No, Vu<V
SLV 2	9.9	-5243	2702	836.54		59552	0.3144	16250	1431			0.53	No, Vu<V
SLV 2	10.7	-4482	2575	-1231.09		0	0	8333	0			0	No, Vu<V
SLV 15	9.9	75	-2779	-757.2		0	0	8333	0			0	No, Vu<V
SLV 15	10.7	-600	-2653	1340.18		0	0	8333	0			0	No, Vu<V
SLV 9	9.9	-3052	-264	168.26		20617	0.5287	12457	1844			6.98	Si
SLV 9	10.7	-767	-569	645.21		0	0	8333	0			0	No, Vu<V
SLV 14	9.9	-622	-2451	-554.83		0	0	8333	0			0	No, Vu<V
SLV 14	10.7	56	-2513	1453.01		0	0	8333	0			0	No, Vu<V
SLV 16	9.9	75	-2779	-757.2		0	0	8333	0			0	No, Vu<V
SLV 16	10.7	-600	-2653	1340.18		0	0	8333	0			0	No, Vu<V
SLV 12	9.9	-729	-1359	-506.32		0	0	8333	0			0	No, Vu<V
SLV 12	10.7	-2954	-1034	269.11		20295	0.5198	12392	1804			1.74	Si
SLV 1	9.9	-5243	2702	836.54		59552	0.3144	16250	1431			0.53	No, Vu<V
SLV 1	10.7	-4482	2575	-1231.09		0	0	8333	0			0	No, Vu<V
SLV 10	9.9	-3052	-264	168.26		20617	0.5287	12457	1844			6.98	Si
SLV 10	10.7	-767	-569	645.21		0	0	8333	0			0	No, Vu<V

Verifica a pressoflessione fuori piano D.M. 17-01-18 (N.T.C.)

quota 9.675 Wa 0.05 denominatore 8 γM = 2

Comb.	fd	Sa	σ0	N	M	Mc	Coeff.s.	Verifica
SLV 11	143750	0.45	4059	-601	64.69	81.33	1.26	Si
SLV 12	143750	0.45	4059	-601	64.69	81.33	1.26	Si
SLV 16	143750	0.45	5807	-860	64.69	114.64	1.77	Si
SLV 15	143750	0.45	5807	-860	64.69	114.64	1.77	Si
SLV 8	143750	0.45	7336	-1086	64.69	142.92	2.21	Si
SLV 7	143750	0.45	7336	-1086	64.69	142.92	2.21	Si
SLV 13	143750	0.45	10584	-1567	64.69	200.36	3.1	Si
SLV 14	143750	0.45	10584	-1567	64.69	200.36	3.1	Si
SLV 4	143750	0.45	16733	-2477	64.69	299.31	4.63	Si
SLV 3	143750	0.45	16733	-2477	64.69	299.31	4.63	Si

Verifica dei meccanismi locali di collasso con analisi cinematica lineare

forza di aggancio al piano = 0 quota mezzeria = 9.675 Wa = 0.05 Ta = 0.0752

Comb.	N top	N base	V orto	α0	M*	e*	a0*	aLim	Verifica
SLV 7	-581	-773	-67	0	138.5	0.89	0	11.49604	No
SLV 12	-363	-820	-59	0	118.8	0.891	0	11.49604	No
SLV 11	-363	-820	-59	0	118.8	0.891	0	11.49604	No
SLV 9	-532	-942	61	0	133.9	0.889	0	11.49604	No

Comb.	N top	N base	V orto	α0	M*	e*	a0*	aLim	Verifica
SLV 8	-581	-773	-67	0	138.5	0.89	0	11.49604	No
SLV 10	-532	-942	61	0	133.9	0.889	0	11.49604	No
SLV 5	-750	-895	52	0.012	154.5	0.894	0.19891	11.49604	No
SLV 6	-750	-895	52	0.012	154.5	0.894	0.19891	11.49604	No
SLV 13	-218	-953	29	0.025	107.1	0.902	0.39726	12.98863	No
SLV 14	-218	-953	29	0.025	107.1	0.902	0.39726	12.98863	No

Tabella dei coefficienti di sicurezza minimi

Stato limite	Coeff.s.	Comb.	Verifica
PF_SLU	7.32	SLU 47	Si
V_SLU	16.201	SLU 39	Si
PF_SLV	0	SLV 16	No
V_SLV	0	SLV 1	No
PFFP_SLV	1.257	SLV 11	Si
R_SLV	0	SLV 7	No

Maschio 177

Verifiche condotte secondo D.M. 17-01-18 (N.T.C.)

Dati geometrici

X ini.	Y ini.	X fin.	Y fin.	Quota i.	Quota.s	l	Sp.	h netta	h ini.	h fin.	a	a.s.,sx	a.s.,dx
-19.687	5.798	-19.687	6.536	L5	L6	0.738	0.28	3.55	3.55	3.55			

Caratteristiche del materiale

(Circolare 7 21-01-19 C8.5.I) Muratura in mattoni pieni e malta di calce LC2_Corti

fb	fk	fvk0	fmedio	τ0	fv0	μ	ϕ	fv,lim	E	G	FC
600000			345000	9000	20000	0.58	0.77	32500	320000000	128000000	1.2

Verifica a pressoflessione nel piano secondo D.M. 17-01-18 NTC §7.8.2.2.1 in combinazioni non sismiche, γM = 3

Comb.	Quota	N	M	σ0	Mu	c.s.	Verifica
SLU 41	7.9	-4967	-90.78	24041	1291.64	14.228	Si
SLU 41	11.45	-2621	90.5	12684	816.27	9.02	Si
SLU 35	7.9	-5040	-89.21	24394	1302.54	14.601	Si
SLU 35	11.45	-2829	97.88	13694	868.34	8.871	Si
SLU 78	7.9	-5953	-93.27	28812	1419.35	15.217	Si
SLU 78	11.45	-3305	105.96	15999	979.95	9.248	Si
SLU 37	7.9	-4942	-89.01	23921	1287.89	14.47	Si
SLU 37	11.45	-2745	95	13289	847.64	8.923	Si
SLU 80	7.9	-5855	-93.07	28340	1408.6	15.135	Si
SLU 80	11.45	-3221	103.07	15593	961.01	9.324	Si
SLU 36	7.9	-5032	-88.07	24356	1301.38	14.776	Si
SLU 36	11.45	-2823	97.61	13666	866.88	8.881	Si
SLU 79	7.9	-5863	-94.21	28378	1409.48	14.961	Si
SLU 79	11.45	-3227	103.35	15622	962.36	9.312	Si
SLU 77	7.9	-5961	-94.41	28850	1420.19	15.043	Si
SLU 77	11.45	-3311	106.23	16028	981.28	9.237	Si
SLU 42	7.9	-4959	-89.65	24003	1290.45	14.395	Si
SLU 42	11.45	-2615	90.23	12655	814.76	9.03	Si
SLU 38	7.9	-4934	-87.87	23883	1286.69	14.643	Si
SLU 38	11.45	-2739	94.72	13260	846.16	8.933	Si

Verifica a pressoflessione nel piano secondo D.M. 17-01-18 NTC §7.8.2.2.1 in combinazioni sismiche, γM = 2

Comb.	Quota	N	M	σ0	Mu	c.s.	Verifica
SLV 6	7.9	-2628	-170.26	12722	868.75	5.103	Si
SLV 6	11.45	-2307	354.21	11166	773.3	2.183	Si
SLV 7	7.9	-5423	-96.36	26249	1570.94	16.303	Si
SLV 7	11.45	-2095	-263.31	10142	708.85	2.692	Si
SLV 8	7.9	-5423	-96.36	26249	1570.94	16.303	Si
SLV 8	11.45	-2095	-263.31	10142	708.85	2.692	Si
SLV 11	7.9	-5201	74.36	25172	1523.39	20.488	Si
SLV 11	11.45	-1743	-249.08	8436	598.59	2.403	Si
SLV 9	7.9	-2406	0.46	11645	803.02	1000	Si
SLV 9	11.45	-1954	368.44	9460	665.22	1.806	Si
SLV 10	7.9	-2406	0.46	11645	803.02	1000	Si
SLV 10	11.45	-1954	368.44	9460	665.22	1.806	Si
SLV 14	7.9	-3124	225.49	15123	1010.03	4.479	Si
SLV 14	11.45	-1469	168.91	7111	510.47	3.022	Si
SLV 5	7.9	-2628	-170.26	12722	868.75	5.103	Si
SLV 5	11.45	-2307	354.21	11166	773.3	2.183	Si
SLV 12	7.9	-5201	74.36	25172	1523.39	20.488	Si
SLV 12	11.45	-1743	-249.08	8436	598.59	2.403	Si
SLV 13	7.9	-3124	225.49	15123	1010.03	4.479	Si
SLV 13	11.45	-1469	168.91	7111	510.47	3.022	Si

Verifica a taglio nel piano secondo D.M. 17-01-18 (N.T.C.) §7.8.2.2.2 con rottura per scorrimento in combinazioni non sismiche, γM = 3

Comb.	Quota	N	V par	M	σ0	σN	l'	fvd	Vt scorr.	Vt fess.diag.	Vt,lim	c.s.	Verifica
SLU 78	7.9	-5953	-597	-93.27		28812	0.7379	9397	1941			3.25	Si
SLU 78	11.45	-3305	-562	105.96		15999	0.7379	7689	1589			2.82	Si
SLU 36	7.9	-5032	-546	-88.07		24356	0.7379	8803	1819			3.33	Si
SLU 36	11.45	-2823	-520	97.61		13666	0.7379	7378	1524			2.93	Si
SLU 79	7.9	-5863	-595	-94.21		28378	0.7379	9339	1930			3.25	Si
SLU 79	11.45	-3227	-555	103.35		15622	0.7379	7638	1578			2.84	Si
SLU 77	7.9	-5961	-599	-94.41		28850	0.7379	9402	1943			3.24	Si
SLU 77	11.45	-3311	-565	106.23		16028	0.7379	7693	1589			2.81	Si
SLU 84	7.9	-5880	-593	-94.85		28460	0.7379	9350	1932			3.26	Si
SLU 84	11.45	-3097	-541	98.57		14989	0.7379	7554	1561			2.89	Si

Comb.	Quota	N	V par	M	σ0	σN	l'	fvd	Vt scorr.	Vt fess.diag.	Vt,lim	c.s.	Verifica
SLU 38	7.9	-4934	-542	-87.87		23883	0.7379	8740	1806			3.33	Si
SLU 38	11.45	-2739	-510	94.72		13260	0.7379	7324	1513			2.97	Si
SLU 80	7.9	-5855	-593	-93.07		28340	0.7379	9334	1928			3.25	Si
SLU 80	11.45	-3221	-553	103.07		15593	0.7379	7635	1577			2.85	Si
SLU 35	7.9	-5040	-547	-89.21		24394	0.7379	8808	1820			3.32	Si
SLU 35	11.45	-2829	-522	97.88		13694	0.7379	7381	1525			2.92	Si
SLU 83	7.9	-5888	-594	-95.98		28498	0.7379	9355	1933			3.25	Si
SLU 83	11.45	-3103	-543	98.85		15017	0.7379	7558	1561			2.88	Si
SLU 37	7.9	-4942	-543	-89.01		23921	0.7379	8745	1807			3.33	Si
SLU 37	11.45	-2745	-512	95		13289	0.7379	7327	1514			2.95	Si

Verifica a taglio nel piano secondo D.M. 17-01-18 (N.T.C.) §7.8.2.2.2 con rottura per scorrimento in combinazioni sismiche, γM = 2

Comb.	Quota	N	V par	M	σ0	σN	l'	fvd	Vt scorr.	Vt fess.diag.	Vt,lim	c.s.	Verifica
SLV 15	7.9	-3963	1456	247.66		19181	0.7379	12169	2514			1.73	Si
SLV 15	11.45	-1406	983	-16.35		6804	0.7379	9694	2003			2.04	Si
SLV 1	7.9	-3866	-2104	-343.56		18713	0.7379	12076	2495			1.19	Si
SLV 1	11.45	-2644	-1557	121.48		12798	0.7379	10893	2250			1.45	Si
SLV 16	7.9	-3963	1456	247.66		19181	0.7379	12169	2514			1.73	Si
SLV 16	11.45	-1406	983	-16.35		6804	0.7379	9694	2003			2.04	Si
SLV 9	7.9	-2406	-1055	0.46		11645	0.7379	10662	2203			2.09	Si
SLV 9	11.45	-1954	-572	368.44		12896	0.5412	10913	1654			2.89	Si
SLV 10	7.9	-2406	-1055	0.46		11645	0.7379	10662	2203			2.09	Si
SLV 10	11.45	-1954	-572	368.44		12896	0.5412	10913	1654			2.89	Si
SLV 2	7.9	-3866	-2104	-343.56		18713	0.7379	12076	2495			1.19	Si
SLV 2	11.45	-2644	-1557	121.48		12798	0.7379	10893	2250			1.45	Si
SLV 3	7.9	-4705	-1408	-321.39		22771	0.7379	12888	2663			1.89	Si
SLV 3	11.45	-2581	-1191	-63.77		12490	0.7379	10831	2238			1.88	Si
SLV 5	7.9	-2628	-1914	-170.26		12722	0.7379	10878	2247			1.17	Si
SLV 5	11.45	-2307	-1224	354.21		12751	0.6462	10883	1969			1.61	Si
SLV 6	7.9	-2628	-1914	-170.26		12722	0.7379	10878	2247			1.17	Si
SLV 6	11.45	-2307	-1224	354.21		12751	0.6462	10883	1969			1.61	Si
SLV 4	7.9	-4705	-1408	-321.39		22771	0.7379	12888	2663			1.89	Si
SLV 4	11.45	-2581	-1191	-63.77		12490	0.7379	10831	2238			1.88	Si

Verifica a pressoflessione fuori piano D.M. 17-01-18 (N.T.C.)

quota 9.675 Wa 0.05 denominatore 8 γM = 2

Comb.	fd	Sa	σ0	N	M	Mc	Coeff.s.	Verifica
SLV 10	143750	0.45	8483	-1753	92.38	228.33	2.47	Si
SLV 9	143750	0.45	8483	-1753	92.38	228.33	2.47	Si
SLV 5	143750	0.45	9240	-1909	92.38	247.05	2.67	Si
SLV 6	143750	0.45	9240	-1909	92.38	247.05	2.67	Si
SLV 14	143750	0.45	10870	-2246	92.38	286.43	3.1	Si
SLV 13	143750	0.45	10870	-2246	92.38	286.43	3.1	Si
SLV 2	143750	0.45	13392	-2767	92.38	344.9	3.73	Si
SLV 1	143750	0.45	13392	-2767	92.38	344.9	3.73	Si
SLV 16	143750	0.45	13672	-2825	92.38	351.2	3.8	Si
SLV 15	143750	0.45	13672	-2825	92.38	351.2	3.8	Si

Verifica dei meccanismi locali di collasso con analisi cinematica lineare

forza di aggancio al piano = 0 quota mezzeria = 9.675 Wa = 0.05 Ta = 0.0752

Comb.	N top	N base	V orto	α0	M*	e*	a0*	aLim	Verifica
SLV 1	-2644	-3866	2	0.047	374.2	0.926	0.73424	12.98863	No
SLV 2	-2644	-3866	2	0.047	374.2	0.926	0.73424	12.98863	No
SLV 3	-2581	-4705	1	0.047	367.8	0.925	0.74147	12.98863	No
SLV 4	-2581	-4705	1	0.047	367.8	0.925	0.74147	12.98863	No
SLV 14	-1469	-3124	-1	0.051	256.9	0.903	0.82666	12.98863	No
SLV 13	-1469	-3124	-1	0.051	256.9	0.903	0.82666	12.98863	No
SLV 16	-1406	-3963	-1	0.051	250.6	0.902	0.82718	12.98863	No
SLV 15	-1406	-3963	-1	0.051	250.6	0.902	0.82718	12.98863	No
SLV 5	-2307	-2628	2	0.048	340.3	0.92	0.75092	11.49604	No
SLV 6	-2307	-2628	2	0.048	340.3	0.92	0.75092	11.49604	No

Tabella dei coefficienti di sicurezza minimi

Stato limite	Coeff.s.	Comb.	Verifica
PF_SLU	8.871	SLU 35	Si
V_SLU	2.815	SLU 77	Si
PF_SLV	1.806	SLV 9	Si
V_SLV	1.174	SLV 5	Si
PFFP_SLV	2.472	SLV 9	Si
R_SLV	0.057	SLV 1	No

Maschio 178

Verifiche condotte secondo D.M. 17-01-18 (N.T.C.)

Dati geometrici

X ini.	Y ini.	X fin.	Y fin.	Quota i.	Quota.s	l	Sp.	h netta	h ini.	h fin.	a	a.s.,sx	a.s.,dx
-19.595	1.046	-19.595	1.283	L5	L6	0.236	0.14	3.55	3.55	3.55			

Caratteristiche del materiale

(Circolare 7 21-01-19 C8.5.I) Muratura in mattoni pieni e malta di calce LC2_Corti

fb	fk	fvk0	fmedio	τ0	fv0	μ	ϕ	fv,lim	E	G	FC
600000			345000	9000	20000	0.58	0.77	32500	320000000	128000000	1.2

Verifica a pressoflessione nel piano secondo D.M. 17-01-18 NTC §7.8.2.2.1 in combinazioni non sismiche, γM = 3

Comb.	Quota	N	M	σ0	Mu	c.s.	Verifica
SLU 78	7.9	-1669	29.32	50413	75.22	2.565	Si
SLU 78	10	-1029	-16.43	31085	75.26	4.581	Si
SLU 41	7.9	-1451	31.38	43814	79.27	2.526	Si
SLU 41	10	-773	-20.04	23334	65.19	3.252	Si
SLU 82	7.9	-1595	31.11	48177	77.06	2.477	Si
SLU 82	10	-897	-18.49	27098	70.8	3.83	Si
SLU 40	7.9	-1390	30.53	41983	79.65	2.609	Si
SLU 40	10	-711	-19.58	21481	61.92	3.162	Si
SLU 81	7.9	-1593	31.15	48109	77.11	2.476	Si
SLU 81	10	-905	-18.51	27332	71.1	3.842	Si
SLU 83	7.9	-1656	31.96	50008	75.59	2.365	Si
SLU 83	10	-959	-18.95	28952	73.06	3.856	Si
SLU 42	7.9	-1453	31.35	43881	79.25	2.528	Si
SLU 42	10	-765	-20.02	23101	64.79	3.236	Si
SLU 39	7.9	-1388	30.56	41915	79.66	2.606	Si
SLU 39	10	-719	-19.6	21714	62.35	3.181	Si
SLU 77	7.9	-1667	29.36	50346	75.28	2.564	Si
SLU 77	10	-1037	-16.45	31319	75.47	4.588	Si
SLU 84	7.9	-1658	31.93	50075	75.53	2.365	Si
SLU 84	10	-951	-18.93	28718	72.79	3.846	Si

Verifica a pressoflessione nel piano secondo D.M. 17-01-18 NTC §7.8.2.2.1 in combinazioni sismiche, γM = 2

Comb.	Quota	N	M	σ0	Mu	c.s.	Verifica
SLV 6	7.9	1342	-189.45	0	0	0	No, Trazione
SLV 6	10	-2523	139.17	76216	112.26	0.807	No, M>Mu
SLV 12	7.9	-3372	218.36	101830	66.42	0.304	No, M>Mu
SLV 12	10	1143	-151.76	0	0	0	No, Trazione
SLV 9	7.9	1052	-165.64	0	0	0	No, Trazione
SLV 9	10	-2246	132.7	67823	118.14	0.89	No, M>Mu
SLV 1	7.9	132	-82.83	0	0	0	No, Trazione
SLV 1	10	-1662	47.14	50189	115.78	2.456	Si
SLV 11	7.9	-3372	218.36	101830	66.42	0.304	No, M>Mu
SLV 11	10	1143	-151.76	0	0	0	No, Trazione
SLV 8	7.9	-3082	194.55	93073	86.82	0.446	No, M>Mu
SLV 8	10	865	-145.3	0	0	0	No, Trazione
SLV 2	7.9	132	-82.83	0	0	0	No, Trazione
SLV 2	10	-1662	47.14	50189	115.78	2.456	Si
SLV 5	7.9	1342	-189.45	0	0	0	No, Trazione
SLV 5	10	-2523	139.17	76216	112.26	0.807	No, M>Mu
SLV 10	7.9	1052	-165.64	0	0	0	No, Trazione
SLV 10	10	-2246	132.7	67823	118.14	0.89	No, M>Mu
SLV 7	7.9	-3082	194.55	93073	86.82	0.446	No, M>Mu
SLV 7	10	865	-145.3	0	0	0	No, Trazione

Verifica a taglio nel piano secondo D.M. 17-01-18 (N.T.C.) §7.8.2.2.2 con rottura per scorrimento in combinazioni non sismiche, γM = 3

Comb.	Quota	N	V par	M	σ0	σN	I'	fvd	Vt scorr.	Vt fess.diag.	Vt,lim	c.s.	Verifica
SLU 33	7.9	-1401	51	27.92		42321	0.2365	10833	359			7.02	Si
SLU 33	10	-790	47	-17.08		23848	0.2365	8735	289			6.18	Si
SLU 83	7.9	-1656	57	31.96		50008	0.2365	10833	359			6.27	Si
SLU 83	10	-959	52	-18.95		28952	0.2365	9416	312			5.98	Si
SLU 39	7.9	-1388	57	30.56		41915	0.2365	10833	359			6.3	Si
SLU 39	10	-719	53	-19.6		21714	0.2365	8451	280			5.31	Si
SLU 42	7.9	-1453	59	31.35		43881	0.2365	10833	359			6.12	Si
SLU 42	10	-765	54	-20.02		23101	0.2365	8636	286			5.28	Si
SLU 84	7.9	-1658	58	31.93		50075	0.2365	10833	359			6.21	Si
SLU 84	10	-951	53	-18.93		28718	0.2365	9385	311			5.92	Si
SLU 40	7.9	-1390	57	30.53		41983	0.2365	10833	359			6.24	Si
SLU 40	10	-711	53	-19.58		21481	0.2365	8420	279			5.25	Si
SLU 41	7.9	-1451	58	31.38		43814	0.2365	10833	359			6.17	Si
SLU 41	10	-773	54	-20.04		23334	0.2365	8667	287			5.33	Si
SLU 36	7.9	-1464	52	28.74		44219	0.2365	10833	359			6.86	Si
SLU 36	10	-843	48	-17.52		25468	0.2365	8951	296			6.19	Si
SLU 81	7.9	-1593	56	31.15		48109	0.2365	10833	359			6.4	Si
SLU 81	10	-905	51	-18.51		27332	0.2365	9200	305			5.97	Si
SLU 82	7.9	-1595	57	31.11		48177	0.2365	10833	359			6.34	Si
SLU 82	10	-897	51	-18.49		27098	0.2365	9169	304			5.91	Si

Verifica a taglio nel piano secondo D.M. 17-01-18 (N.T.C.) §7.8.2.2.2 con rottura per scorrimento in combinazioni sismiche, γM = 2

Comb.	Quota	N	V par	M	σ0	σN	I'	fvd	Vt scorr.	Vt fess.diag.	Vt,lim	c.s.	Verifica
SLV 8	7.9	-3082	435	194.55		133127	0.1653	16250	376			0.86	No, Vu<V
SLV 8	10	865	342	-145.3		0	0	8333	0			0	No, Vu<V
SLV 2	7.9	132	-338	-82.83		0	0	8333	0			0	No, Vu<V
SLV 2	10	-1662	-94	47.14		50189	0.2365	16250	538			5.73	Si
SLV 10	7.9	1052	-390	-165.64		0	0	8333	0			0	No, Vu<V
SLV 10	10	-2246	-303	132.7		90389	0.1775	16250	404			1.33	Si
SLV 9	7.9	1052	-390	-165.64		0	0	8333	0			0	No, Vu<V
SLV 9	10	-2246	-303	132.7		90389	0.1775	16250	404			1.33	Si
SLV 5	7.9	1342	-520	-189.45		0	0	8333	0			0	No, Vu<V
SLV 5	10	-2523	-312	139.17		95221	0.1893	16250	431			1.38	Si
SLV 7	7.9	-3082	435	194.55		133127	0.1653	16250	376			0.86	No, Vu<V
SLV 7	10	865	342	-145.3		0	0	8333	0			0	No, Vu<V
SLV 6	7.9	1342	-520	-189.45		0	0	8333	0			0	No, Vu<V
SLV 6	10	-2523	-312	139.17		95221	0.1893	16250	431			1.38	Si
SLV 1	7.9	132	-338	-82.83		0	0	8333	0			0	No, Vu<V
SLV 1	10	-1662	-94	47.14		50189	0.2365	16250	538			5.73	Si
SLV 12	7.9	-3372	566	218.36		150098	0.1604	16250	365			0.64	No, Vu<V
SLV 12	10	1143	351	-151.76		0	0	8333	0			0	No, Vu<V
SLV 11	7.9	-3372	566	218.36		150098	0.1604	16250	365			0.64	No, Vu<V
SLV 11	10	1143	351	-151.76		0	0	8333	0			0	No, Vu<V

Verifica a pressoflessione fuori piano D.M. 17-01-18 (N.T.C.)

quota 9.675 Wa 0.03 denominatore 8 γM = 2

Comb.	fd	Sa	σ0	N	M	Mc	Coeff.s.	Verifica
SLV 8	143750	0.45	0	842	15.48	0	0	No, Trazione
SLV 11	143750	0.45	0	1122	15.48	0	0	No, Trazione
SLV 7	143750	0.45	0	842	15.48	0	0	No, Trazione
SLV 16	143750	0.45	0	264	15.48	0	0	No, Trazione
SLV 15	143750	0.45	0	264	15.48	0	0	No, Trazione
SLV 12	143750	0.45	0	1122	15.48	0	0	No, Trazione
SLV 3	143750	0.45	20252	-671	15.48	39.16	2.53	Si
SLV 4	143750	0.45	20252	-671	15.48	39.16	2.53	Si
SLV 14	143750	0.45	22703	-752	15.48	42.84	2.77	Si
SLV 13	143750	0.45	22703	-752	15.48	42.84	2.77	Si

Verifica dei meccanismi locali di collasso con analisi cinematica lineare

forza di aggancio al piano = 0 quota mezzeria = 9.675 Wa = 0.03 Ta = 0.1503

Comb.	N top	N base	V orto	α0	M*	e*	a0*	aLim	Verifica
SLV 6	341	1342	1	0	0	0	0	18.76006	No, Trazione
SLV 10	439	1052	0	0	0	0	0	18.76006	No, Trazione
SLV 9	439	1052	0	0	0	0	0	18.76006	No, Trazione
SLV 2	-411	132	1	0	0	0	0	18.76006	No, Trazione
SLV 5	341	1342	1	0	0	0	0	18.76006	No, Trazione
SLV 1	-411	132	1	0	0	0	0	18.76006	No, Trazione
SLV 12	-1383	-3372	-1	0.021	157.4	0.968	0.30864	18.76006	No
SLV 11	-1383	-3372	-1	0.021	157.4	0.968	0.30864	18.76006	No
SLV 7	-1481	-3082	0	0.021	167.3	0.97	0.31153	18.76006	No
SLV 8	-1481	-3082	0	0.021	167.3	0.97	0.31153	18.76006	No

Tabella dei coefficienti di sicurezza minimi

Stato limite	Coeff.s.	Comb.	Verifica
PF_SLU	2.365	SLU 83	Si
V_SLU	5.251	SLU 40	Si
PF_SLV	0	SLV 16	No
V_SLV	0	SLV 1	No
PFFP_SLV	0	SLV 16	No
R_SLV	0	SLV 10	No

Maschio 179

Verifiche condotte secondo D.M. 17-01-18 (N.T.C.)

Dati geometrici

X ini.	Y ini.	X fin.	Y fin.	Quota i.	Quota.s	l	Sp.	h netta	h ini.	h fin.	a	a.s.,sx	a.s.,dx
-19.595	1.983	-19.595	5.658	L5	L6	3.675	0.14	3.55	3.55	3.55			

Caratteristiche del materiale

(Circolare 7 21-01-19 C8.5.I) Muratura in mattoni pieni e malta di calce LC2_Corti

fb	fk	fvk0	fmedio	τ0	fv0	μ	ϕ	fv,lim	E	G	FC
600000			345000	9000	20000	0.58	0.77	32500	320000000	128000000	1.2

Verifica a pressoflessione nel piano secondo D.M. 17-01-18 NTC §7.8.2.2.1 in combinazioni non sismiche, γM = 3

Comb.	Quota	N	M	σ0	Mu	c.s.	Verifica
SLU 39	7.9	-11527	-113.55	22405	15354.89	135.223	Si
SLU 39	10	-8986	-1798.92	17466	12971.11	7.21	Si
SLU 35	7.9	-12130	-194.3	23578	15837.68	81.512	Si
SLU 35	10	-9659	-1820.69	18775	13657.95	7.502	Si
SLU 42	7.9	-11929	-141.51	23186	15679.86	110.805	Si
SLU 42	10	-9403	-1871.75	18276	13401.01	7.16	Si
SLU 36	7.9	-12097	-199.68	23513	15811.9	79.185	Si
SLU 36	10	-9634	-1817.76	18726	13632.85	7.5	Si
SLU 40	7.9	-11494	-118.94	22340	15327.34	128.869	Si
SLU 40	10	-8961	-1795.99	17417	12944.52	7.207	Si
SLU 84	7.9	-14111	-234.35	27427	17198.25	73.388	Si
SLU 84	10	-11024	-2026.01	21427	14927.69	7.368	Si
SLU 82	7.9	-13676	-211.78	26582	16928.96	79.937	Si
SLU 82	10	-10582	-1950.24	20567	14534.05	7.452	Si
SLU 83	7.9	-14144	-228.96	27492	17218.16	75.201	Si
SLU 83	10	-11049	-2028.94	21476	14949.7	7.368	Si
SLU 41	7.9	-11962	-136.12	23250	15706.14	115.382	Si
SLU 41	10	-9428	-1874.69	18325	13426.61	7.162	Si
SLU 81	7.9	-13709	-206.39	26647	16950.14	82.126	Si
SLU 81	10	-10607	-1953.18	20616	14557.04	7.453	Si

Verifica a pressoflessione nel piano secondo D.M. 17-01-18 NTC §7.8.2.2.1 in combinazioni sismiche, γM = 2

Comb.	Quota	N	M	σ0	Mu	c.s.	Verifica
SLV 5	7.9	-9814	-7533.95	19076	15217.85	2.02	Si
SLV 5	10	-3436	5271.47	6679	5969.19	1.132	Si
SLV 7	7.9	-10668	8511.98	20735	16275.32	1.912	Si
SLV 7	10	-13526	-8455.96	26291	19506.15	2.307	Si
SLV 12	7.9	-8931	7033.58	17358	14078.61	2.002	Si
SLV 12	10	-10896	-7475.03	21178	16550.77	2.214	Si
SLV 11	7.9	-8931	7033.58	17358	14078.61	2.002	Si
SLV 11	10	-10896	-7475.03	21178	16550.77	2.214	Si
SLV 9	7.9	-8077	-9012.35	15699	12934.45	1.435	Si
SLV 9	10	-806	6252.39	0	0	0	No, e>l/2
SLV 14	7.9	-6349	-5121.07	12341	10488.25	2.048	Si
SLV 14	10	-1269	2592.21	0	0	0	No, e>l/2

Comb.	Quota	N	M	σ0	Mu	c.s.	Verifica
SLV 13	7.9	-6349	-5121.07	12341	10488.25	2.048	Si
SLV 13	10	-1269	2592.21	0	0	0	No, e>l/2
SLV 10	7.9	-8077	-9012.35	15699	12934.45	1.435	Si
SLV 10	10	-806	6252.39	0	0	0	No, e>l/2
SLV 6	7.9	-9814	-7533.95	19076	15217.85	2.02	Si
SLV 6	10	-3436	5271.47	6679	5969.19	1.132	Si
SLV 8	7.9	-10668	8511.98	20735	16275.32	1.912	Si
SLV 8	10	-13526	-8455.96	26291	19506.15	2.307	Si

Verifica a taglio nel piano secondo D.M. 17-01-18 (N.T.C.) §7.8.2.2.2 con rottura per scorrimento in combinazioni non sismiche, γM = 3

Comb.	Quota	N	V par	M	σ0	σN	l'	fvd	Vt scorr.	Vt fess.diag.	Vt,lim	c.s.	Verifica
SLU 75	7.9	-13845	546	-269.95		26909	3.6749	9143	4704			8.62	Si
SLU 75	10	-10813	558	-1896.25		21017	3.6749	8358	4300			7.71	Si
SLU 78	7.9	-14279	573	-292.52		27755	3.6749	9256	4762			8.31	Si
SLU 78	10	-11255	592	-1972.02		21876	3.6749	8472	4359			7.36	Si
SLU 35	7.9	-12130	517	-194.3		23578	3.6749	8699	4476			8.66	Si
SLU 35	10	-9659	536	-1820.69		18775	3.6749	8059	4146			7.73	Si
SLU 80	7.9	-14072	563	-302.77		27352	3.6749	9202	4735			8.41	Si
SLU 80	10	-11064	579	-1928.92		21505	3.6749	8423	4333			7.48	Si
SLU 79	7.9	-14105	561	-297.39		27416	3.6749	9211	4739			8.45	Si
SLU 79	10	-11089	576	-1931.85		21554	3.6749	8429	4337			7.53	Si
SLU 36	7.9	-12097	519	-199.68		23513	3.6749	8691	4471			8.62	Si
SLU 36	10	-9634	540	-1817.76		18726	3.6749	8052	4143			7.68	Si
SLU 83	7.9	-14144	574	-228.96		27492	3.6749	9221	4744			8.26	Si
SLU 83	10	-11049	582	-2028.94		21476	3.6749	8419	4331			7.45	Si
SLU 84	7.9	-14111	577	-234.35		27427	3.6749	9213	4740			8.22	Si
SLU 84	10	-11024	585	-2026.01		21427	3.6749	8412	4328			7.4	Si
SLU 77	7.9	-14313	570	-287.14		27819	3.6749	9265	4767			8.36	Si
SLU 77	10	-11280	589	-1974.95		21925	3.6749	8479	4362			7.41	Si
SLU 42	7.9	-11929	523	-141.51		23186	3.6749	8647	4449			8.51	Si
SLU 42	10	-9403	532	-1871.75		18276	3.6749	7992	4112			7.72	Si

Verifica a taglio nel piano secondo D.M. 17-01-18 (N.T.C.) §7.8.2.2.2 con rottura per scorrimento in combinazioni sismiche, γM = 2

Comb.	Quota	N	V par	M	σ0	σN	l'	fvd	Vt scorr.	Vt fess.diag.	Vt,lim	c.s.	Verifica
SLV 11	7.9	-8931	10422	7033.58		20253	3.1497	12384	5461			0.52	No, Vu<V
SLV 11	10	-10896	10330	-7475.03		22531	3.4543	12840	6209			0.6	No, Vu<V
SLV 14	7.9	-6349	-6381	-5121.07		14664	3.0927	11266	4878			0.76	No, Vu<V
SLV 14	10	-1269	-4103	2592.21		0	0	8333	0			0	No, Vu<V
SLV 10	7.9	-8077	-11795	-9012.35		26648	2.165	13663	4141			0.35	No, Vu<V
SLV 10	10	-806	-10465	6252.39		0	0	8333	0			0	No, Vu<V
SLV 13	7.9	-6349	-6381	-5121.07		14664	3.0927	11266	4878			0.76	No, Vu<V
SLV 13	10	-1269	-4103	2592.21		0	0	8333	0			0	No, Vu<V
SLV 7	7.9	-10668	12447	8511.98		24433	3.1186	13220	5772			0.46	No, Vu<V
SLV 7	10	-13526	11116	-8455.96		26565	3.6369	13646	6948			0.63	No, Vu<V
SLV 8	7.9	-10668	12447	8511.98		24433	3.1186	13220	5772			0.46	No, Vu<V
SLV 8	10	-13526	11116	-8455.96		26565	3.6369	13646	6948			0.63	No, Vu<V
SLV 5	7.9	-9814	-9770	-7533.95		21842	3.2094	12702	5707			0.58	No, Vu<V
SLV 5	10	-3436	-9679	5271.47		26961	0.9104	13726	1749			0.18	No, Vu<V
SLV 6	7.9	-9814	-9770	-7533.95		21842	3.2094	12702	5707			0.58	No, Vu<V
SLV 6	10	-3436	-9679	5271.47		26961	0.9104	13726	1749			0.18	No, Vu<V
SLV 12	7.9	-8931	10422	7033.58		20253	3.1497	12384	5461			0.52	No, Vu<V
SLV 12	10	-10896	10330	-7475.03		22531	3.4543	12840	6209			0.6	No, Vu<V
SLV 9	7.9	-8077	-11795	-9012.35		26648	2.165	13663	4141			0.35	No, Vu<V
SLV 9	10	-806	-10465	6252.39		0	0	8333	0			0	No, Vu<V

Verifica a pressoflessione fuori piano D.M. 17-01-18 (N.T.C.)

quota 9.675 Wa 0.03 denominatore 8 γM = 2

Comb.	fd	Sa	σ0	N	M	Mc	Coeff.s.	Verifica
SLV 14	143750	0.45	0	-1756	240.49	0	0	No, e>t/2
SLV 13	143750	0.45	0	-1756	240.49	0	0	No, e>t/2
SLV 10	143750	0.45	0	-1845	240.49	0	0	No, e>t/2
SLV 9	143750	0.45	0	-1845	240.49	0	0	No, e>t/2
SLV 15	143750	0.45	8449	-4347	240.49	283.23	1.18	Si
SLV 16	143750	0.45	8449	-4347	240.49	283.23	1.18	Si
SLV 6	143750	0.45	8767	-4511	240.49	293.09	1.22	Si
SLV 5	143750	0.45	8767	-4511	240.49	293.09	1.22	Si
SLV 12	143750	0.45	20367	-10479	240.49	611.25	2.54	Si
SLV 11	143750	0.45	20367	-10479	240.49	611.25	2.54	Si

Verifica dei meccanismi locali di collasso con analisi cinematica lineare

forza di aggancio al piano = 0 quota mezzeria = 9.675 Wa = 0.03 Ta = 0.1503

Comb.	N top	N base	V orto	α0	M*	e*	a0*	aLim	Verifica
SLV 4	-6972	-12396	-14	0.022	970.9	0.928	0.34185	18.76006	No
SLV 3	-6972	-12396	-14	0.022	970.9	0.928	0.34185	18.76006	No
SLV 7	-7022	-10668	-10	0.022	976	0.929	0.34835	18.76006	No
SLV 8	-7022	-10668	-10	0.022	976	0.929	0.34835	18.76006	No
SLV 1	-5894	-12140	-10	0.023	862.4	0.921	0.35775	18.76006	No
SLV 2	-5894	-12140	-10	0.023	862.4	0.921	0.35775	18.76006	No
SLV 12	-5987	-8931	-3	0.024	871.7	0.922	0.37137	18.76006	No
SLV 11	-5987	-8931	-3	0.024	871.7	0.922	0.37137	18.76006	No
SLV 16	-3521	-6605	10	0.024	626.1	0.902	0.38688	18.76006	No
SLV 15	-3521	-6605	10	0.024	626.1	0.902	0.38688	18.76006	No

Tabella dei coefficienti di sicurezza minimi

Stato limite	Coeff.s.	Comb.	Verifica
PF_SLU	7.16	SLU 42	Si
V_SLU	7.361	SLU 78	Si
PF_SLV	0	SLV 9	No
V_SLV	0	SLV 9	No

Stato limite	Coeff.s.	Comb.	Verifica
PFFP_SLV	0	SLV 9	No
R_SLV	0.018	SLV 3	No

Maschio 180

Verifiche condotte secondo D.M. 17-01-18 (N.T.C.)

Dati geometrici

X ini.	Y ini.	X fin.	Y fin.	Quota i.	Quota.s	l	Sp.	h netta	h ini.	h fin.	a	a.s.,sx	a.s.,dx
-16.2	-3.254	-17.275	-3.254	L5	L6	1.075	0.28	3.55	3.55	3.55			

Caratteristiche del materiale

(Circolare 7 21-01-19 C8.5.I) Muratura in mattoni pieni e malta di calce LC2_Corti

fb	fk	fvk0	fmedio	τ0	fv0	μ	ϕ	fv,lim	E	G	FC
600000			345000	9000	20000	0.58	0.77	32500	320000000	128000000	1.2

Verifica a pressoflessione nel piano secondo D.M. 17-01-18 NTC §7.8.2.2.1 in combinazioni non sismiche, γM = 3

Comb.	Quota	N	M	σ0	Mu	c.s.	Verifica
SLU 68	8.8	-6083	-228.61	20211	2458.47	10.754	Si
SLU 68	10.7	-5336	530.36	17728	2243.93	4.231	Si
SLU 46	8.8	-5972	-189.49	19840	2428.04	12.814	Si
SLU 46	10.7	-4945	491.07	16427	2121.71	4.321	Si
SLU 47	8.8	-5692	-184.18	18911	2349.21	12.755	Si
SLU 47	10.7	-4816	488.85	16000	2080.04	4.255	Si
SLU 23	8.8	-4545	-225.25	15099	1990	8.835	Si
SLU 23	10.7	-4193	443.03	13930	1868.22	4.217	Si
SLU 73	8.8	-6114	-282.38	20311	2466.65	8.735	Si
SLU 73	10.7	-5560	553.66	18474	2310.9	4.174	Si
SLU 52	8.8	-5722	-237.96	19012	2357.9	9.909	Si
SLU 52	10.7	-5040	512.14	16745	2152.14	4.202	Si
SLU 44	8.8	-5390	-212	17906	2260.06	10.661	Si
SLU 44	10.7	-4579	492.86	15214	2001.6	4.061	Si
SLU 67	8.8	-6363	-233.91	21140	2532.5	10.827	Si
SLU 67	10.7	-5465	532.59	18156	2282.66	4.286	Si
SLU 65	8.8	-5781	-256.42	19205	2374.51	9.26	Si
SLU 65	10.7	-5100	534.38	16942	2170.88	4.062	Si
SLU 2	8.8	-4154	-180.82	13800	1854.36	10.255	Si
SLU 2	10.7	-3672	401.51	12201	1678.25	4.18	Si

Verifica a pressoflessione nel piano secondo D.M. 17-01-18 NTC §7.8.2.2.1 in combinazioni sismiche, γM = 2

Comb.	Quota	N	M	σ0	Mu	c.s.	Verifica
SLV 14	8.8	-1776	-4039.56	0	0	0	No, e>l/2
SLV 14	10.7	-7402	2502.76	24591	3177.71	1.27	Si
SLV 7	8.8	-3442	2272.32	0	0	0	No, e>l/2
SLV 7	10.7	1164	-1015.23	0	0	0	No, Trazione
SLV 12	8.8	-1203	208.17	3996	625.37	3.004	Si
SLV 12	10.7	-146	117.58	0	0	0	No, e>l/2
SLV 3	8.8	-7770	3689.96	25816	3294.11	0.893	No, M>Mu
SLV 3	10.7	-393	-1764.15	0	0	0	No, e>l/2
SLV 13	8.8	-1776	-4039.56	0	0	0	No, e>l/2
SLV 13	10.7	-7402	2502.76	24591	3177.71	1.27	Si
SLV 15	8.8	-306	-3190.53	0	0	0	No, e>l/2
SLV 15	10.7	-4758	2011.88	15807	2226.49	1.107	Si
SLV 8	8.8	-3442	2272.32	0	0	0	No, e>l/2
SLV 8	10.7	1164	-1015.23	0	0	0	No, Trazione
SLV 16	8.8	-306	-3190.53	0	0	0	No, e>l/2
SLV 16	10.7	-4758	2011.88	15807	2226.49	1.107	Si
SLV 11	8.8	-1203	208.17	3996	625.37	3.004	Si
SLV 11	10.7	-146	117.58	0	0	0	No, e>l/2
SLV 4	8.8	-7770	3689.96	25816	3294.11	0.893	No, M>Mu
SLV 4	10.7	-393	-1764.15	0	0	0	No, e>l/2

Verifica a taglio nel piano secondo D.M. 17-01-18 (N.T.C.) §7.8.2.2.2 con rottura per scorrimento in combinazioni non sismiche, γM = 3

Comb.	Quota	N	V par	M	σ0	σN	l'	fvd	Vt scorr.	Vt fess.diag.	Vt,lim	c.s.	Verifica
SLU 75	8.8	-6696	-658	-259.87		22246	1.075	8522	2565			3.9	Si
SLU 75	10.7	-5926	152	551.87		19687	1.075	8181	2462			16.2	Si
SLU 39	8.8	-5433	-659	-236.2		18050	1.075	7962	2397			3.64	Si
SLU 39	10.7	-4796	128	420.99		15934	1.075	7680	2312			18.04	Si
SLU 82	8.8	-6421	-694	-283.06		21333	1.075	8400	2528			3.64	Si
SLU 82	10.7	-5736	125	542.09		19056	1.075	8096	2437			19.54	Si
SLU 84	8.8	-6724	-662	-255.24		22339	1.075	8534	2569			3.88	Si
SLU 84	10.7	-5972	183	538.07		19842	1.075	8201	2469			13.48	Si
SLU 81	8.8	-6669	-752	-267.38		22156	1.075	8510	2561			3.4	Si
SLU 81	10.7	-5703	127	512.34		18946	1.075	8082	2433			19.18	Si
SLU 77	8.8	-7246	-684	-216.38		24074	1.075	8765	2638			3.86	Si
SLU 77	10.7	-6129	212	518.11		20364	1.075	8271	2489			11.72	Si
SLU 60	8.8	-6278	-645	-222.95		20857	1.075	8336	2509			3.89	Si
SLU 60	10.7	-5182	99	470.83		17218	1.075	7851	2363			23.94	Si
SLU 83	8.8	-6971	-720	-239.56		23161	1.075	8644	2602			3.61	Si
SLU 83	10.7	-5939	185	508.33		19732	1.075	8187	2464			13.31	Si
SLU 41	8.8	-5736	-627	-208.39		19056	1.075	8096	2437			3.89	Si
SLU 41	10.7	-5033	186	416.98		16720	1.075	7785	2343			12.57	Si
SLU 74	8.8	-6944	-716	-244.2		23068	1.075	8631	2598			3.63	Si
SLU 74	10.7	-5893	154	522.12		19577	1.075	8166	2458			15.95	Si

Verifica a taglio nel piano secondo D.M. 17-01-18 (N.T.C.) §7.8.2.2.2 con rottura per scorrimento in combinazioni sismiche, γM = 2

Comb.	Quota	N	V par	M	σ0	σN	l'	fvd	Vt scorr.	Vt fess.diag.	Vt,lim	c.s.	Verifica
SLV 13	8.8	-1776	-6412	-4039.56		0	0	8333	0			0	No, Vu<V
SLV 13	10.7	-7402	-2322	2502.76		44199	0.5981	16250	2721			1.17	Si
SLV 8	8.8	-3442	2383	2272.32		0	0	8333	0			0	No, Vu<V
SLV 8	10.7	1164	1864	-1015.23		0	0	8333	0			0	No, Vu<V
SLV 4	8.8	-7770	5438	3689.96		147730	0.1879	16250	855			0.16	No, Vu<V
SLV 4	10.7	-393	2422	-1764.15		0	0	8333	0			0	No, Vu<V
SLV 11	8.8	-1203	-956	208.17		3996	1.075	9133	2749			2.87	Si
SLV 11	10.7	-146	659	117.58		0	0	8333	0			0	No, Vu<V
SLV 15	8.8	-306	-5692	-3190.53		0	0	8333	0			0	No, Vu<V
SLV 15	10.7	-4758	-1595	2011.88		49408	0.3439	16250	1565			0.98	No, Vu<V
SLV 3	8.8	-7770	5438	3689.96		147730	0.1879	16250	855			0.16	No, Vu<V
SLV 3	10.7	-393	2422	-1764.15		0	0	8333	0			0	No, Vu<V
SLV 16	8.8	-306	-5692	-3190.53		0	0	8333	0			0	No, Vu<V
SLV 16	10.7	-4758	-1595	2011.88		49408	0.3439	16250	1565			0.98	No, Vu<V
SLV 7	8.8	-3442	2383	2272.32		0	0	8333	0			0	No, Vu<V
SLV 7	10.7	1164	1864	-1015.23		0	0	8333	0			0	No, Vu<V
SLV 12	8.8	-1203	-956	208.17		3996	1.075	9133	2749			2.87	Si
SLV 12	10.7	-146	659	117.58		0	0	8333	0			0	No, Vu<V
SLV 14	8.8	-1776	-6412	-4039.56		0	0	8333	0			0	No, Vu<V
SLV 14	10.7	-7402	-2322	2502.76		44199	0.5981	16250	2721			1.17	Si

Verifica a pressoflessione fuori piano D.M. 17-01-18 (N.T.C.)

quota 9.675 Wa 0.05 denominatore 8 γM = 2

Comb.	fd	Sa	σ0	N	M	Mc	Coeff.s.	Verifica
SLV 12	143750	0.45	0	-162	131.52	0	0	No, e>t/2
SLV 15	143750	0.45	0	22	131.52	0	0	No, Trazione
SLV 11	143750	0.45	0	-162	131.52	0	0	No, e>t/2
SLV 16	143750	0.45	0	22	131.52	0	0	No, Trazione
SLV 14	143750	0.45	6242	-1879	131.52	249.58	1.9	Si
SLV 13	143750	0.45	6242	-1879	131.52	249.58	1.9	Si
SLV 8	143750	0.45	7378	-2221	131.52	292.14	2.22	Si
SLV 7	143750	0.45	7378	-2221	131.52	292.14	2.22	Si
SLV 10	143750	0.45	21590	-6498	131.52	749.03	5.7	Si
SLV 9	143750	0.45	21590	-6498	131.52	749.03	5.7	Si

Verifica dei meccanismi locali di collasso con analisi cinematica lineare

forza di aggancio al piano = 0 quota mezzeria = 9.675 Wa = 0.05 Ta = 0.0752

Comb.	N top	N base	V orto	α0	M*	e*	a0*	aLim	Verifica
SLV 7	1703	2028	-97	0	0	0	0	11.49604	No, Trazione
SLV 8	1703	2028	-97	0	0	0	0	11.49604	No, Trazione
SLV 12	937	579	-184	0	0	0	0	11.49604	No, Trazione
SLV 11	937	579	-184	0	0	0	0	11.49604	No, Trazione
SLV 3	-520	-671	102	0	223.6	0.898	0	12.98863	No
SLV 4	-520	-671	102	0	223.6	0.898	0	12.98863	No
SLV 15	-3072	-5500	-186	0.003	466.9	0.917	0.04277	12.98863	No
SLV 16	-3072	-5500	-186	0.003	466.9	0.917	0.04277	12.98863	No
SLV 2	-3191	-4433	187	0.004	478.7	0.918	0.05685	12.98863	No
SLV 1	-3191	-4433	187	0.004	478.7	0.918	0.05685	12.98863	No

Tabella dei coefficienti di sicurezza minimi

Stato limite	Coeff.s.	Comb.	Verifica
PF_SLU	4.061	SLU 44	Si
V_SLU	3.405	SLU 81	Si
PF_SLV	0	SLV 8	No
V_SLV	0	SLV 3	No
PFFP_SLV	0	SLV 16	No
R_SLV	0	SLV 12	No

Maschio 181

Verifiche condotte secondo D.M. 17-01-18 (N.T.C.)

Dati geometrici

X ini.	Y ini.	X fin.	Y fin.	Quota i.	Quota.s	l	Sp.	h netta	h ini.	h fin.	a	a.s.,sx	a.s.,dx
-18.448	-3.254	-18.448	1.046	L5	L6	4.301	0.14	3.55	3.55	3.55			

Caratteristiche del materiale

(Circolare 7 21-01-19 C8.5.I) Muratura in mattoni pieni e malta di calce LC2_Corti

fb	fk	fvk0	fmedio	τ0	fv0	μ	ϕ	fv,lim	E	G	FC
600000			345000	9000	20000	0.58	0.77	32500	320000000	128000000	1.2

Verifica a pressoflessione nel piano secondo D.M. 17-01-18 NTC §7.8.2.2.1 in combinazioni non sismiche, γM = 3

Comb.	Quota	N	M	σ0	Mu	c.s.	Verifica
SLU 78	7.9	-19685	2739.91	32695	25340.08	9.248	Si
SLU 78	11.45	-7768	-700.58	12901	14057.74	20.066	Si
SLU 84	7.9	-19557	2610.62	32482	25285.07	9.685	Si
SLU 84	11.45	-7457	-738.05	12385	13597.03	18.423	Si
SLU 77	7.9	-19571	2636.39	32505	25291.03	9.593	Si
SLU 77	11.45	-7879	-905.92	13086	14221.14	15.698	Si
SLU 36	7.9	-16738	2431.53	27800	23709.18	9.751	Si
SLU 36	11.45	-6517	-589.03	10825	12152.34	20.631	Si
SLU 76	7.9	-18918	2577.75	31420	24988.68	9.694	Si
SLU 76	11.45	-7204	-533.19	11966	13216.25	24.787	Si
SLU 75	7.9	-19133	2568.19	31777	25092.25	9.77	Si
SLU 75	11.45	-7456	-704.48	12383	13594.93	19.298	Si

Comb.	Quota	N	M	σ0	Mu	c.s.	Verifica
SLU 70	7.9	-18015	2502.18	29921	24509.4	9.795	Si
SLU 70	11.45	-7352	-542	12211	13439.3	24.796	Si
SLU 79	7.9	-19280	2576.93	32022	25160.94	9.764	Si
SLU 79	11.45	-7702	-871.52	12793	13961.76	16.02	Si
SLU 80	7.9	-19394	2680.46	32211	25212.91	9.406	Si
SLU 80	11.45	-7591	-666.18	12608	13796.63	20.71	Si
SLU 38	7.9	-16447	2372.07	27317	23506.8	9.91	Si
SLU 38	11.45	-6341	-554.63	10531	11871.85	21.405	Si

Verifica a pressoflessione nel piano secondo D.M. 17-01-18 NTC §7.8.2.2.1 in combinazioni sismiche, γM = 2

Comb.	Quota	N	M	σ0	Mu	c.s.	Verifica
SLV 8	7.9	-11143	4240.72	18508	20332.41	4.795	Si
SLV 8	11.45	-8336	-838.85	13845	15894.38	18.948	Si
SLV 1	7.9	-14167	1133.43	23530	24597.64	21.702	Si
SLV 1	11.45	-4236	-1310.69	7035	8584.34	6.549	Si
SLV 2	7.9	-14167	1133.43	23530	24597.64	21.702	Si
SLV 2	11.45	-4236	-1310.69	7035	8584.34	6.549	Si
SLV 3	7.9	-13033	2688.94	21647	23060.94	8.576	Si
SLV 3	11.45	-6154	-1334.29	10221	12125.92	9.088	Si
SLV 7	7.9	-11143	4240.72	18508	20332.41	4.795	Si
SLV 7	11.45	-8336	-838.85	13845	15894.38	18.948	Si
SLV 5	7.9	-14923	-944.33	24785	25580.07	27.088	Si
SLV 5	11.45	-1943	-760.19	3228	4068.5	5.352	Si
SLV 6	7.9	-14923	-944.33	24785	25580.07	27.088	Si
SLV 6	11.45	-1943	-760.19	3228	4068.5	5.352	Si
SLV 4	7.9	-13033	2688.94	21647	23060.94	8.576	Si
SLV 4	11.45	-6154	-1334.29	10221	12125.92	9.088	Si
SLV 12	7.9	-10657	4015.31	17700	19596.83	4.881	Si
SLV 12	11.45	-8289	-390.59	13767	15815.7	40.492	Si
SLV 11	7.9	-10657	4015.31	17700	19596.83	4.881	Si
SLV 11	11.45	-8289	-390.59	13767	15815.7	40.492	Si

Verifica a taglio nel piano secondo D.M. 17-01-18 (N.T.C.) §7.8.2.2.2 con rottura per scorrimento in combinazioni non sismiche, γM = 3

Comb.	Quota	N	V par	M	σ0	σN	I'	fvd	Vt scorr.	Vt fess.diag.	Vt,lim	c.s.	Verifica
SLU 31	7.9	-15418	-1105	2097.64		25607	4.3007	8970	5401			4.89	Si
SLU 31	11.45	-5642	-373	-425.56		9371	4.3007	6805	4097			10.99	Si
SLU 47	7.9	-15505	-1127	2032.3		25752	4.3007	8989	5412			4.8	Si
SLU 47	11.45	-6208	-401	-263.83		10310	4.3007	6930	4173			10.41	Si
SLU 44	7.9	-14953	-1110	1860.57		24834	4.3007	8867	5339			4.81	Si
SLU 44	11.45	-5896	-381	-267.74		9792	4.3007	6861	4131			10.84	Si
SLU 13	7.9	-14228	-1132	1961.64		23631	4.3007	8706	5242			4.63	Si
SLU 13	11.45	-5373	-403	-310.86		8924	4.3007	6745	4061			10.09	Si
SLU 10	7.9	-13676	-1115	1789.92		22713	4.3007	8584	5168			4.64	Si
SLU 10	11.45	-5061	-383	-314.77		8406	4.3007	6676	4020			10.49	Si
SLU 26	7.9	-14301	-1141	2031.63		23752	4.3007	8722	5252			4.6	Si
SLU 26	11.45	-5538	-412	-263.07		9199	4.3007	6782	4083			9.92	Si
SLU 34	7.9	-15971	-1122	2269.36		26525	4.3007	9092	5474			4.88	Si
SLU 34	11.45	-5954	-392	-421.65		9889	4.3007	6874	4139			10.55	Si
SLU 23	7.9	-13748	-1123	1859.91		22834	4.3007	8600	5178			4.61	Si
SLU 23	11.45	-5226	-392	-266.98		8680	4.3007	6713	4042			10.31	Si
SLU 2	7.9	-12006	-1134	1552.18		19940	4.3007	8214	4946			4.36	Si
SLU 2	11.45	-4645	-402	-156.19		7715	4.3007	6584	3964			9.86	Si
SLU 5	7.9	-12558	-1151	1723.91		20858	4.3007	8337	5019			4.36	Si
SLU 5	11.45	-4957	-422	-152.29		8234	4.3007	6653	4006			9.5	Si

Verifica a taglio nel piano secondo D.M. 17-01-18 (N.T.C.) §7.8.2.2.2 con rottura per scorrimento in combinazioni sismiche, γM = 2

Comb.	Quota	N	V par	M	σ0	σN	I'	fvd	Vt scorr.	Vt fess.diag.	Vt,lim	c.s.	Verifica
SLV 11	7.9	-10657	10868	4015.31		17700	4.3007	11873	7149			0.66	No, Vu<V
SLV 11	11.45	-8289	9109	-390.59		13767	4.3007	11087	6675			0.73	No, Vu<V
SLV 9	7.9	-14437	-10373	-1169.75		23978	4.3007	13129	7905			0.76	No, Vu<V
SLV 9	11.45	-1896	-8176	-311.93		3149	4.3007	8963	5397			0.66	No, Vu<V
SLV 2	7.9	-14167	-3576	1133.43		23530	4.3007	13039	7851			2.2	Si
SLV 2	11.45	-4236	-3755	-1310.69		7035	4.3007	9740	5865			1.56	Si
SLV 8	7.9	-11143	10574	4240.72		18508	4.3007	12035	7246			0.69	No, Vu<V
SLV 8	11.45	-8336	8357	-838.85		13845	4.3007	11102	6685			0.8	No, Vu<V
SLV 1	7.9	-14167	-3576	1133.43		23530	4.3007	13039	7851			2.2	Si
SLV 1	11.45	-4236	-3755	-1310.69		7035	4.3007	9740	5865			1.56	Si
SLV 7	7.9	-11143	10574	4240.72		18508	4.3007	12035	7246			0.69	No, Vu<V
SLV 7	11.45	-8336	8357	-838.85		13845	4.3007	11102	6685			0.8	No, Vu<V
SLV 12	7.9	-10657	10868	4015.31		17700	4.3007	11873	7149			0.66	No, Vu<V
SLV 12	11.45	-8289	9109	-390.59		13767	4.3007	11087	6675			0.73	No, Vu<V
SLV 6	7.9	-14923	-10667	-944.33		24785	4.3007	13290	8002			0.75	No, Vu<V
SLV 6	11.45	-1943	-8928	-760.19		3228	4.3007	8979	5406			0.61	No, Vu<V
SLV 10	7.9	-14437	-10373	-1169.75		23978	4.3007	13129	7905			0.76	No, Vu<V
SLV 10	11.45	-1896	-8176	-311.93		3149	4.3007	8963	5397			0.66	No, Vu<V
SLV 5	7.9	-14923	-10667	-944.33		24785	4.3007	13290	8002			0.75	No, Vu<V
SLV 5	11.45	-1943	-8928	-760.19		3228	4.3007	8979	5406			0.61	No, Vu<V

Verifica a pressoflessione fuori piano D.M. 17-01-18 (N.T.C.)

quota 9.675 Wa 0.03 denominatore 8 γM = 2

Comb.	fd	Sa	σ0	N	M	Mc	Coeff.s.	Verifica
SLV 1	143750	0.45	13571	-8171	281.44	508.46	1.81	Si
SLV 2	143750	0.45	13571	-8171	281.44	508.46	1.81	Si
SLV 6	143750	0.45	14079	-8477	281.44	525.02	1.87	Si
SLV 5	143750	0.45	14079	-8477	281.44	525.02	1.87	Si
SLV 4	143750	0.45	14267	-8590	281.44	531.1	1.89	Si
SLV 3	143750	0.45	14267	-8590	281.44	531.1	1.89	Si
SLV 9	143750	0.45	15211	-9158	281.44	561.28	1.99	Si
SLV 10	143750	0.45	15211	-9158	281.44	561.28	1.99	Si
SLV 7	143750	0.45	16399	-9874	281.44	598.41	2.13	Si

Comb.	fd	Sa	σ0	N	M	Mc	Coeff.s.	Verifica
SLV 8	143750	0.45	16399	-9874	281.44	598.41	2.13	Si

Verifica dei meccanismi locali di collasso con analisi cinematica lineare

forza di aggancio al piano = 0 quota mezzeria = 9.675 Wa = 0.03 Ta = 0.1503

Comb.	N top	N base	V orto	α0	M*	e*	a0*	aLim	Verifica
SLV 6	-1943	-14923	111	0.001	524.7	0.889	0.01511	18.76006	No
SLV 5	-1943	-14923	111	0.001	524.7	0.889	0.01511	18.76006	No
SLV 9	-1896	-14437	100	0.003	520.4	0.889	0.05484	18.76006	No
SLV 10	-1896	-14437	100	0.003	520.4	0.889	0.05484	18.76006	No
SLV 11	-8289	-10657	-111	0.013	1149.3	0.929	0.19678	18.76006	No
SLV 12	-8289	-10657	-111	0.013	1149.3	0.929	0.19678	18.76006	No
SLV 7	-8336	-11143	-101	0.014	1154	0.929	0.21275	18.76006	No
SLV 8	-8336	-11143	-101	0.014	1154	0.929	0.21275	18.76006	No
SLV 1	-4236	-14167	49	0.018	744.1	0.903	0.28967	18.76006	No
SLV 2	-4236	-14167	49	0.018	744.1	0.903	0.28967	18.76006	No

Tabella dei coefficienti di sicurezza minimi

Stato limite	Coeff.s.	Comb.	Verifica
PF_SLU	9.248	SLU 78	Si
V_SLU	4.361	SLU 5	Si
PF_SLV	4.795	SLV 7	Si
V_SLV	0.606	SLV 5	No
PFFP_SLV	1.807	SLV 1	Si
R_SLV	0.001	SLV 5	No

Maschio 182

Verifiche condotte secondo D.M. 17-01-18 (N.T.C.)

Dati geometrici

X ini.	Y ini.	X fin.	Y fin.	Quota i.	Quota.s	l	Sp.	h netta	h ini.	h fin.	a	a.s.,sx	a.s.,dx
-16.992	-4.784	-16.992	-4.589	L5	L6	0.194	0.3	3.55	3.55	3.55			

Caratteristiche del materiale

(Circolare 7 21-01-19 C8.5.I) Muratura in mattoni pieni e malta di calce LC2_Corti

fb	fk	fvk0	fmedio	τ0	fv0	μ	ϕ	fv,lim	E	G	FC
600000			345000	9000	20000	0.58	0.77	32500	320000000	128000000	1.2

Verifica a pressoflessione nel piano secondo D.M. 17-01-18 NTC §7.8.2.2.1 in combinazioni non sismiche, γM = 3

Comb.	Quota	N	M	σ0	Mu	c.s.	Verifica
SLU 23	7.9	-812	-46.48	13930	65.41	1.407	Si
SLU 23	11.01	-689	-2.66	11813	57.21	21.47	Si
SLU 5	7.9	-774	-43.55	13284	62.97	1.446	Si
SLU 5	11.01	-684	-3.29	11726	56.86	17.269	Si
SLU 65	7.9	-1100	-47.95	18874	82.13	1.713	Si
SLU 65	11.01	-834	-3.7	14307	66.8	18.078	Si
SLU 2	7.9	-739	-43.51	12678	60.63	1.394	Si
SLU 2	11.01	-650	-2.92	11154	54.52	18.661	Si
SLU 73	7.9	-1194	-50.84	20474	86.82	1.708	Si
SLU 73	11.01	-868	-3.31	14884	68.9	20.815	Si
SLU 10	7.9	-832	-46.4	14279	66.7	1.438	Si
SLU 10	11.01	-684	-2.54	11731	56.87	22.421	Si
SLU 26	7.9	-847	-46.52	14536	67.64	1.454	Si
SLU 26	11.01	-722	-3.04	12386	59.49	19.6	Si
SLU 13	7.9	-868	-46.44	14885	68.9	1.484	Si
SLU 13	11.01	-717	-2.91	12303	59.16	20.35	Si
SLU 34	7.9	-941	-49.41	16137	73.29	1.483	Si
SLU 34	11.01	-756	-2.65	12963	61.74	23.298	Si
SLU 31	7.9	-905	-49.37	15531	71.19	1.442	Si
SLU 31	11.01	-722	-2.28	12390	59.5	26.106	Si

Verifica a pressoflessione nel piano secondo D.M. 17-01-18 NTC §7.8.2.2.1 in combinazioni sismiche, γM = 2

Comb.	Quota	N	M	σ0	Mu	c.s.	Verifica
SLV 1	7.9	-1427	-11.77	24474	110.85	9.42	Si
SLV 1	11.01	757	-69.79	0	0	0	No, Trazione
SLV 4	7.9	-3164	235.45	54275	170.86	0.726	No, M>Mu
SLV 4	11.01	-365	-94.3	0	0	0	No, e>l/2
SLV 3	7.9	-3164	235.45	54275	170.86	0.726	No, M>Mu
SLV 3	11.01	-365	-94.3	0	0	0	No, e>l/2
SLV 9	7.9	2165	-458.54	0	0	0	No, Trazione
SLV 9	11.01	1098	61.62	0	0	0	No, Trazione
SLV 6	7.9	1443	-385.45	0	0	0	No, Trazione
SLV 6	11.01	1545	14.17	0	0	0	No, Trazione
SLV 10	7.9	2165	-458.54	0	0	0	No, Trazione
SLV 10	11.01	1098	61.62	0	0	0	No, Trazione
SLV 5	7.9	1443	-385.45	0	0	0	No, Trazione
SLV 5	11.01	1545	14.17	0	0	0	No, Trazione
SLV 7	7.9	-4348	438.61	0	0	0	No, e>l/2
SLV 7	11.01	-2196	-67.53	37674	147.59	2.185	Si
SLV 8	7.9	-4348	438.61	0	0	0	No, e>l/2
SLV 8	11.01	-2196	-67.53	37674	147.59	2.185	Si
SLV 2	7.9	-1427	-11.77	24474	110.85	9.42	Si
SLV 2	11.01	757	-69.79	0	0	0	No, Trazione

Verifica a taglio nel piano secondo D.M. 17-01-18 (N.T.C.) §7.8.2.2.2 con rottura per scorrimento in combinazioni non sismiche, γM = 3

Comb.	Quota	N	V par	M	σ0	σN	I'	fvd	Vt scorr.	Vt fess.diag.	Vt,lim	c.s.	Verifica
SLU 13	7.9	-868	-77	-46.44		22091	0.1309	8501	334			4.34	Si
SLU 13	11.01	-717	93	-2.91		12303	0.1943	7196	419			4.51	Si
SLU 34	7.9	-941	-79	-49.41		23416	0.1339	8678	349			4.4	Si
SLU 34	11.01	-756	102	-2.65		12963	0.1943	7284	425			4.17	Si
SLU 10	7.9	-832	-76	-46.4		22328	0.1243	8533	318			4.16	Si
SLU 10	11.01	-684	93	-2.54		11731	0.1943	7120	415			4.48	Si
SLU 73	7.9	-1194	-81	-50.84		24303	0.1637	8796	432			5.35	Si
SLU 73	11.01	-868	98	-3.31		14884	0.1943	7540	440			4.5	Si
SLU 76	7.9	-1229	-81	-50.88		24488	0.1673	8821	443			5.46	Si
SLU 76	11.01	-901	98	-3.68		15456	0.1943	7616	444			4.53	Si
SLU 31	7.9	-905	-79	-49.37		23597	0.1279	8702	334			4.23	Si
SLU 31	11.01	-722	101	-2.28		12390	0.1943	7208	420			4.15	Si
SLU 23	7.9	-812	-78	-46.48		22600	0.1198	8569	308			3.97	Si
SLU 23	11.01	-689	94	-2.66		11813	0.1943	7131	416			4.42	Si
SLU 5	7.9	-774	-76	-43.55		21023	0.1228	8359	308			4.07	Si
SLU 5	11.01	-684	86	-3.29		11726	0.1943	7119	415			4.85	Si
SLU 26	7.9	-847	-78	-46.52		22278	0.1268	8526	324			4.16	Si
SLU 26	11.01	-722	94	-3.04		12386	0.1943	7207	420			4.45	Si
SLU 2	7.9	-739	-75	-43.51		21444	0.1149	8415	290			3.86	Si
SLU 2	11.01	-650	85	-2.92		11154	0.1943	7043	411			4.82	Si

Verifica a taglio nel piano secondo D.M. 17-01-18 (N.T.C.) §7.8.2.2.2 con rottura per scorrimento in combinazioni sismiche, γM = 2

Comb.	Quota	N	V par	M	σ0	σN	I'	fvd	Vt scorr.	Vt fess.diag.	Vt,lim	c.s.	Verifica
SLV 3	7.9	-3164	-167	235.45		154574	0.0682	16250	333			2	Si
SLV 3	11.01	-365	-666	-94.3		0	0	8333	0			0	No, Vu<V
SLV 4	7.9	-3164	-167	235.45		154574	0.0682	16250	333			2	Si
SLV 4	11.01	-365	-666	-94.3		0	0	8333	0			0	No, Vu<V
SLV 1	7.9	-1427	-459	-11.77		24474	0.1943	13228	771			1.68	Si
SLV 1	11.01	757	-1228	-69.79		0	0	8333	0			0	No, Vu<V
SLV 8	7.9	-4348	387	438.61		0	0	8333	0			0	No, Vu<V
SLV 8	11.01	-2196	654	-67.53		37674	0.1943	15868	925			1.42	Si
SLV 2	7.9	-1427	-459	-11.77		24474	0.1943	13228	771			1.68	Si
SLV 2	11.01	757	-1228	-69.79		0	0	8333	0			0	No, Vu<V
SLV 10	7.9	2165	-407	-458.54		0	0	8333	0			0	No, Vu<V
SLV 10	11.01	1098	-649	61.62		0	0	8333	0			0	No, Vu<V
SLV 5	7.9	1443	-588	-385.45		0	0	8333	0			0	No, Vu<V
SLV 5	11.01	1545	-1219	14.17		0	0	8333	0			0	No, Vu<V
SLV 9	7.9	2165	-407	-458.54		0	0	8333	0			0	No, Vu<V
SLV 9	11.01	1098	-649	61.62		0	0	8333	0			0	No, Vu<V
SLV 7	7.9	-4348	387	438.61		0	0	8333	0			0	No, Vu<V
SLV 7	11.01	-2196	654	-67.53		37674	0.1943	15868	925			1.42	Si
SLV 6	7.9	1443	-588	-385.45		0	0	8333	0			0	No, Vu<V
SLV 6	11.01	1545	-1219	14.17		0	0	8333	0			0	No, Vu<V

Verifica a pressoflessione fuori piano D.M. 17-01-18 (N.T.C.)

quota 9.675 Wa 0.05 denominatore 8 γM = 2

Comb.	fd	Sa	σ0	N	M	Mc	Coeff.s.	Verifica
SLV 11	143750	0.45	0	676	24.88	0	0	No, Trazione
SLV 4	143750	0.45	0	292	24.88	0	0	No, Trazione
SLV 7	143750	0.45	0	1085	24.88	0	0	No, Trazione
SLV 12	143750	0.45	0	676	24.88	0	0	No, Trazione
SLV 3	143750	0.45	0	292	24.88	0	0	No, Trazione
SLV 8	143750	0.45	0	1085	24.88	0	0	No, Trazione
SLV 1	143750	0.45	13672	-797	24.88	106.17	4.27	Si
SLV 2	143750	0.45	13672	-797	24.88	106.17	4.27	Si
SLV 16	143750	0.45	18389	-1072	24.88	136.6	5.49	Si
SLV 15	143750	0.45	18389	-1072	24.88	136.6	5.49	Si

Verifica dei meccanismi locali di collasso con analisi cinematica lineare

forza di aggancio al piano = 0 quota mezzeria = 9.675 Wa = 0.05 Ta = 0.0702

Comb.	N top	N base	V orto	α0	M*	e*	a0*	aLim	Verifica
SLV 13	-575	981	0	0	0	0	0	11.94331	No, Trazione
SLV 10	-851	2165	-1	0	0	0	0	10.62261	No, Trazione
SLV 6	-871	1443	-1	0	0	0	0	10.62261	No, Trazione
SLV 5	-871	1443	-1	0	0	0	0	10.62261	No, Trazione
SLV 9	-851	2165	-1	0	0	0	0	10.62261	No, Trazione
SLV 14	-575	981	0	0	0	0	0	11.94331	No, Trazione
SLV 1	-643	-1427	-1	0.051	95.2	0.92	0.80015	11.94331	No
SLV 2	-643	-1427	-1	0.051	95.2	0.92	0.80015	11.94331	No
SLV 3	-427	-3164	0	0.055	73.7	0.904	0.88234	11.94331	No
SLV 4	-427	-3164	0	0.055	73.7	0.904	0.88234	11.94331	No

Tabella dei coefficienti di sicurezza minimi

Stato limite	Coeff.s.	Comb.	Verifica
PF_SLU	1.394	SLU 2	Si
V_SLU	3.858	SLU 2	Si
PF_SLV	0	SLV 14	No
V_SLV	0	SLV 1	No
PFFP_SLV	0	SLV 12	No
R_SLV	0	SLV 14	No

Maschio 183

Verifiche condotte secondo D.M. 17-01-18 (N.T.C.)

Dati geometrici

X ini.	Y ini.	X fin.	Y fin.	Quota i.	Quota.s	l	Sp.	h netta	h ini.	h fin.	a	a.s.,sx	a.s.,dx
-16.992	-3.499	-16.992	-3.254	L5	L6	0.245	0.3	3.55	3.55	3.55			

Caratteristiche del materiale

(Circolare 7 21-01-19 C8.5.I) Muratura in mattoni pieni e malta di calce LC2_Corti

fb	fk	fvk0	fmedio	τ0	fv0	μ	ϕ	fv,lim	E	G	FC
600000			345000	9000	20000	0.58	0.77	32500	320000000	128000000	1.2

Verifica a pressoflessione nel piano secondo D.M. 17-01-18 NTC §7.8.2.2.1 in combinazioni non sismiche, γM = 3

Comb.	Quota	N	M	σ0	Mu	c.s.	Verifica
SLU 65	7.9	-1963	-63.68	26702	161.63	2.538	Si
SLU 65	11.01	-735	25.43	10005	79.03	3.108	Si
SLU 10	7.9	-1668	-59.66	22690	147.41	2.471	Si
SLU 10	11.01	-567	23.61	7713	62.88	2.663	Si
SLU 31	7.9	-1835	-68.34	24965	155.91	2.281	Si
SLU 31	11.01	-626	26.34	8513	68.65	2.606	Si
SLU 13	7.9	-1725	-60.25	23462	150.42	2.496	Si
SLU 13	11.01	-619	24.27	8421	67.99	2.802	Si
SLU 23	7.9	-1665	-60.41	22645	147.23	2.437	Si
SLU 23	11.01	-575	23.32	7821	63.66	2.73	Si
SLU 34	7.9	-1892	-68.94	25736	158.53	2.3	Si
SLU 34	11.01	-678	27	9221	73.64	2.728	Si
SLU 73	7.9	-2133	-71.62	29021	168.23	2.349	Si
SLU 73	11.01	-786	28.45	10697	83.68	2.942	Si
SLU 68	7.9	-2019	-64.28	27474	163.96	2.551	Si
SLU 68	11.01	-787	26.09	10713	83.78	3.212	Si
SLU 76	7.9	-2190	-72.21	29793	170.16	2.356	Si
SLU 76	11.01	-838	29.1	11406	88.32	3.035	Si
SLU 26	7.9	-1721	-61	23417	150.25	2.463	Si
SLU 26	11.01	-627	23.98	8529	68.76	2.867	Si

Verifica a pressoflessione nel piano secondo D.M. 17-01-18 NTC §7.8.2.2.1 in combinazioni sismiche, γM = 2

Comb.	Quota	N	M	σ0	Mu	c.s.	Verifica
SLV 2	7.9	-2330	35.73	31693	211.36	5.915	Si
SLV 2	11.01	-400	-174.28	0	0	0	No, e>l/2
SLV 11	7.9	5369	426.01	0	0	0	No, Trazione
SLV 11	11.01	137	152.51	0	0	0	No, Trazione
SLV 12	7.9	5369	426.01	0	0	0	No, Trazione
SLV 12	11.01	137	152.51	0	0	0	No, Trazione
SLV 16	7.9	-233	-86.92	0	0	0	No, e>l/2
SLV 16	11.01	-867	197.84	0	0	0	No, e>l/2
SLV 3	7.9	1848	345.63	0	0	0	No, Trazione
SLV 3	11.01	154	-118.29	0	0	0	No, Trazione
SLV 15	7.9	-233	-86.92	0	0	0	No, e>l/2
SLV 15	11.01	-867	197.84	0	0	0	No, e>l/2
SLV 4	7.9	1848	345.63	0	0	0	No, Trazione
SLV 4	11.01	154	-118.29	0	0	0	No, Trazione
SLV 1	7.9	-2330	35.73	31693	211.36	5.915	Si
SLV 1	11.01	-400	-174.28	0	0	0	No, e>l/2
SLV 7	7.9	5994	555.78	0	0	0	No, Trazione
SLV 7	11.01	443	57.67	0	0	0	No, Trazione
SLV 8	7.9	5994	555.78	0	0	0	No, Trazione
SLV 8	11.01	443	57.67	0	0	0	No, Trazione

Verifica a taglio nel piano secondo D.M. 17-01-18 (N.T.C.) §7.8.2.2.2 con rottura per scorrimento in combinazioni non sismiche, γM = 3

Comb.	Quota	N	V par	M	σ0	σN	l'	fvd	Vt scorr.	Vt fess.diag.	Vt,lim	c.s.	Verifica
SLU 23	7.9	-1665	-19	-60.41		22645	0.245	8575	630			34.06	Si
SLU 23	11.01	-575	190	23.32		7821	0.245	6598	485			2.55	Si
SLU 73	7.9	-2133	-28	-71.62		29021	0.245	9425	693			24.79	Si
SLU 73	11.01	-786	202	28.45		10697	0.245	6982	513			2.55	Si
SLU 65	7.9	-1963	-17	-63.68		26702	0.245	9116	670			39.06	Si
SLU 65	11.01	-735	193	25.43		10005	0.245	6890	506			2.62	Si
SLU 13	7.9	-1725	-19	-60.25		23462	0.245	8684	638			34.13	Si
SLU 13	11.01	-619	190	24.27		8421	0.245	6678	491			2.58	Si
SLU 10	7.9	-1668	-19	-59.66		22690	0.245	8581	631			33.14	Si
SLU 10	11.01	-567	189	23.61		7790	0.2426	6594	480			2.54	Si
SLU 26	7.9	-1721	-18	-61		23417	0.245	8678	638			35.1	Si
SLU 26	11.01	-627	191	23.98		8529	0.245	6693	492			2.57	Si
SLU 34	7.9	-1892	-29	-68.94		25736	0.245	8987	661			22.81	Si
SLU 34	11.01	-678	200	27		9221	0.245	6785	499			2.5	Si
SLU 52	7.9	-1966	-18	-62.94		26747	0.245	9122	670			37.92	Si
SLU 52	11.01	-727	192	25.72		9897	0.245	6875	505			2.63	Si
SLU 76	7.9	-2190	-28	-72.21		29793	0.245	9528	700			25.37	Si
SLU 76	11.01	-838	203	29.1		11406	0.245	7076	520			2.56	Si
SLU 31	7.9	-1835	-29	-68.34		24965	0.245	8884	653			22.29	Si
SLU 31	11.01	-626	198	26.34		8646	0.2413	6708	486			2.45	Si

Verifica a taglio nel piano secondo D.M. 17-01-18 (N.T.C.) §7.8.2.2.2 con rottura per scorrimento in combinazioni sismiche, γM = 2

Comb.	Quota	N	V par	M	σ0	σN	l'	fvd	Vt scorr.	Vt fess.diag.	Vt,lim	c.s.	Verifica
SLV 7	7.9	5994	599	555.78		0	0	8333	0			0	No, Vu<V
SLV 7	11.01	443	1461	57.67		0	0	8333	0			0	No, Vu<V
SLV 12	7.9	5369	847	426.01		0	0	8333	0			0	No, Vu<V
SLV 12	11.01	137	1876	152.51		0	0	8333	0			0	No, Vu<V
SLV 11	7.9	5369	847	426.01		0	0	8333	0			0	No, Vu<V
SLV 11	11.01	137	1876	152.51		0	0	8333	0			0	No, Vu<V
SLV 1	7.9	-2330	-647	35.73		31693	0.245	14672	1078			1.67	Si
SLV 1	11.01	-400	-1156	-174.28		0	0	8333	0			0	No, Vu<V
SLV 4	7.9	1848	-205	345.63		0	0	8333	0			0	No, Vu<V
SLV 4	11.01	154	-171	-118.29		0	0	8333	0			0	No, Vu<V

Comb.	Quota	N	V par	M	σ0	σN	l'	fvd	Vt scorr.	Vt fess.diag.	Vt,lim	c.s.	Verifica
SLV 3	7.9	1848	-205	345.63		0	0	8333	0			0	No, Vu<V
SLV 3	11.01	154	-171	-118.29		0	0	8333	0			0	No, Vu<V
SLV 2	7.9	-2330	-647	35.73		31693	0.245	14672	1078			1.67	Si
SLV 2	11.01	-400	-1156	-174.28		0	0	8333	0			0	No, Vu<V
SLV 15	7.9	-233	620	-86.92		0	0	8333	0			0	No, Vu<V
SLV 15	11.01	-867	1210	197.84		0	0	8333	0			0	No, Vu<V
SLV 16	7.9	-233	620	-86.92		0	0	8333	0			0	No, Vu<V
SLV 16	11.01	-867	1210	197.84		0	0	8333	0			0	No, Vu<V
SLV 8	7.9	5994	599	555.78		0	0	8333	0			0	No, Vu<V
SLV 8	11.01	443	1461	57.67		0	0	8333	0			0	No, Vu<V

Verifica a pressoflessione fuori piano D.M. 17-01-18 (N.T.C.)

quota 9.675 Wa 0.05 denominatore 8 γM = 2

Comb.	fd	Sa	σ0	N	M	Mc	Coeff.s.	Verifica
SLV 6	143750	0.45	0	712	31.37	0	0	No, Trazione
SLV 10	143750	0.45	0	804	31.37	0	0	No, Trazione
SLV 9	143750	0.45	0	804	31.37	0	0	No, Trazione
SLV 5	143750	0.45	0	712	31.37	0	0	No, Trazione
SLV 14	143750	0.45	5661	-416	31.37	59.52	1.9	Si
SLV 13	143750	0.45	5661	-416	31.37	59.52	1.9	Si
SLV 1	143750	0.45	9820	-722	31.37	99.57	3.17	Si
SLV 2	143750	0.45	9820	-722	31.37	99.57	3.17	Si
SLV 16	143750	0.45	21131	-1553	31.37	192.69	6.14	Si
SLV 15	143750	0.45	21131	-1553	31.37	192.69	6.14	Si

Verifica dei meccanismi locali di collasso con analisi cinematica lineare

forza di aggancio al piano = 0 quota mezzeria = 9.675 Wa = 0.05 Ta = 0.0702

Comb.	N top	N base	V orto	α0	M*	e*	a0*	aLim	Verifica
SLV 2	538	-2330	1	0	0	0	0	11.94331	No, Trazione
SLV 1	538	-2330	1	0	0	0	0	11.94331	No, Trazione
SLV 3	454	1848	9	0	0	0	0	11.94331	No, Trazione
SLV 12	-928	5369	13	0	0	0	0	10.62261	No, Trazione
SLV 8	-335	5994	16	0	0	0	0	10.62261	No, Trazione
SLV 4	454	1848	9	0	0	0	0	11.94331	No, Trazione
SLV 7	-335	5994	16	0	0	0	0	10.62261	No, Trazione
SLV 11	-928	5369	13	0	0	0	0	10.62261	No, Trazione
SLV 5	-56	-7932	-14	0.03	49.7	0.928	0.46335	10.62261	No
SLV 6	-56	-7932	-14	0.03	49.7	0.928	0.46335	10.62261	No

Tabella dei coefficienti di sicurezza minimi

Stato limite	Coeff.s.	Comb.	Verifica
PF_SLU	2.281	SLU 31	Si
V_SLU	2.45	SLU 31	Si
PF_SLV	0	SLV 12	No
V_SLV	0	SLV 1	No
PFFP_SLV	0	SLV 10	No
R_SLV	0	SLV 12	No

Maschio 184

Verifiche condotte secondo D.M. 17-01-18 (N.T.C.)

Dati geometrici

X ini.	Y ini.	X fin.	Y fin.	Quota i.	Quota.s	l	Sp.	h netta	h ini.	h fin.	a	a.s.,sx	a.s.,dx
-13.753	-3.254	-15.3	-3.254	L5	L6	1.547	0.28	3.55	3.55	3.55			

Caratteristiche del materiale

(Circolare 7 21-01-19 C8.5.I) Muratura in mattoni pieni e malta di calce LC2_Corti

fb	fk	fvk0	fmedio	τ0	fv0	μ	ϕ	fv,lim	E	G	FC
600000			345000	9000	20000	0.58	0.77	32500	320000000	128000000	1.2

Verifica a pressoflessione nel piano secondo D.M. 17-01-18 NTC §7.8.2.2.1 in combinazioni non sismiche, γM = 3

Comb.	Quota	N	M	σ0	Mu	c.s.	Verifica
SLU 77	7.9	-9627	-942.39	22227	5414.36	5.745	Si
SLU 77	10	-10484	1497.72	24205	5699.36	3.805	Si
SLU 42	7.9	-7441	-924.57	17180	4541.46	4.912	Si
SLU 42	10	-8704	1363.59	20095	5071.28	3.719	Si
SLU 74	7.9	-9308	-960.18	21490	5299.99	5.52	Si
SLU 74	10	-10187	1489.94	23520	5604.24	3.761	Si
SLU 82	7.9	-8966	-1022.71	20701	5172.57	5.058	Si
SLU 82	10	-10010	1528.83	23112	5545.8	3.627	Si
SLU 39	7.9	-7142	-959.77	16488	4405.58	4.59	Si
SLU 39	10	-8489	1391.33	19599	4985.98	3.584	Si
SLU 81	7.9	-8986	-1040.12	20746	5180.05	4.98	Si
SLU 81	10	-10092	1564.35	23301	5573.05	3.563	Si
SLU 41	7.9	-7461	-941.98	17225	4550.27	4.831	Si
SLU 41	10	-8786	1399.11	20284	5103.21	3.647	Si
SLU 84	7.9	-9285	-1004.92	21438	5291.72	5.266	Si
SLU 84	10	-10307	1536.61	23797	5643.23	3.673	Si
SLU 83	7.9	-9305	-1022.34	21483	5298.93	5.183	Si
SLU 83	10	-10389	1572.12	23986	5669.4	3.606	Si
SLU 40	7.9	-7122	-942.36	16443	4396.5	4.665	Si
SLU 40	10	-8407	1355.82	19410	4952.98	3.653	Si

Verifica a pressoflessione nel piano secondo D.M. 17-01-18 NTC §7.8.2.2.1 in combinazioni sismiche, γM = 2

Comb.	Quota	N	M	σ0	Mu	c.s.	Verifica
SLV 12	7.9	-2906	-1864.28	6708	2123.92	1.139	Si
SLV 12	10	-4720	1152.27	10897	3325.09	2.886	Si
SLV 3	7.9	-8377	2900.61	19341	5453.67	1.88	Si
SLV 3	10	-957	-1977.42	0	0	0	No, e>l/2
SLV 14	7.9	-4955	-4110.08	0	0	0	No, e>l/2
SLV 14	10	-12793	3862.52	29537	7503.06	1.943	Si
SLV 15	7.9	-3167	-4224.55	0	0	0	No, e>l/2
SLV 15	10	-10630	3495.77	24542	6570.27	1.879	Si
SLV 13	7.9	-4955	-4110.08	0	0	0	No, e>l/2
SLV 13	10	-12793	3862.52	29537	7503.06	1.943	Si
SLV 2	7.9	-10164	3015.08	23467	6351.76	2.107	Si
SLV 2	10	-3120	-1610.67	7204	2271.05	1.41	Si
SLV 1	7.9	-10164	3015.08	23467	6351.76	2.107	Si
SLV 1	10	-3120	-1610.67	7204	2271.05	1.41	Si
SLV 16	7.9	-3167	-4224.55	0	0	0	No, e>l/2
SLV 16	10	-10630	3495.77	24542	6570.27	1.879	Si
SLV 4	7.9	-8377	2900.61	19341	5453.67	1.88	Si
SLV 4	10	-957	-1977.42	0	0	0	No, e>l/2
SLV 11	7.9	-2906	-1864.28	6708	2123.92	1.139	Si
SLV 11	10	-4720	1152.27	10897	3325.09	2.886	Si

Verifica a taglio nel piano secondo D.M. 17-01-18 (N.T.C.) §7.8.2.2.2 con rottura per scorrimento in combinazioni non sismiche, γM = 3

Comb.	Quota	N	V par	M	σ0	σN	I'	fvd	Vt scorr.	Vt fess.diag.	Vt,lim	c.s.	Verifica
SLU 83	7.9	-9305	-2216	-1022.34		21483	1.5469	8420	3647			1.65	Si
SLU 83	10	-10389	-2117	1572.12		23986	1.5469	8754	3792			1.79	Si
SLU 81	7.9	-8986	-2222	-1040.12		20746	1.5469	8322	3604			1.62	Si
SLU 81	10	-10092	-2159	1564.35		23301	1.5469	8662	3752			1.74	Si
SLU 74	7.9	-9308	-2119	-960.18		21490	1.5469	8421	3647			1.72	Si
SLU 74	10	-10187	-2028	1489.94		23520	1.5469	8692	3765			1.86	Si
SLU 39	7.9	-7142	-2011	-959.77		16488	1.5469	7754	3358			1.67	Si
SLU 39	10	-8489	-1959	1391.33		19599	1.5469	8169	3538			1.81	Si
SLU 42	7.9	-7441	-1961	-924.57		17180	1.5469	7846	3398			1.73	Si
SLU 42	10	-8704	-1805	1363.59		20095	1.5469	8235	3567			1.98	Si
SLU 41	7.9	-7461	-2005	-941.98		17225	1.5469	7852	3401			1.7	Si
SLU 41	10	-8786	-1917	1399.11		20284	1.5469	8260	3578			1.87	Si
SLU 82	7.9	-8966	-2179	-1022.71		20701	1.5469	8316	3602			1.65	Si
SLU 82	10	-10010	-2047	1528.83		23112	1.5469	8637	3741			1.83	Si
SLU 77	7.9	-9627	-2112	-942.39		22227	1.5469	8519	3690			1.75	Si
SLU 77	10	-10484	-1987	1497.72		24205	1.5469	8783	3804			1.91	Si
SLU 84	7.9	-9285	-2173	-1004.92		21438	1.5469	8414	3644			1.68	Si
SLU 84	10	-10307	-2005	1536.61		23797	1.5469	8729	3781			1.89	Si
SLU 40	7.9	-7122	-1967	-942.36		16443	1.5469	7748	3356			1.71	Si
SLU 40	10	-8407	-1846	1355.82		19410	1.5469	8143	3527			1.91	Si

Verifica a taglio nel piano secondo D.M. 17-01-18 (N.T.C.) §7.8.2.2.2 con rottura per scorrimento in combinazioni sismiche, γM = 2

Comb.	Quota	N	V par	M	σ0	σN	I'	fvd	Vt scorr.	Vt fess.diag.	Vt,lim	c.s.	Verifica
SLV 2	7.9	-10164	5352	3015.08		25377	1.4305	13409	5371			1	Si
SLV 2	10	-3120	2582	-1610.67		14440	0.7717	11221	2425			0.94	No, Vu<V
SLV 16	7.9	-3167	-8057	-4224.55		0	0	8333	0			0	No, Vu<V
SLV 16	10	-10630	-5184	3495.77		28464	1.3338	14026	5238			1.01	Si
SLV 12	7.9	-2906	-4585	-1864.28		26239	0.3955	13581	1504			0.33	No, Vu<V
SLV 12	10	-4720	-54	1152.27		10897	1.5469	10513	4553			85	Si
SLV 15	7.9	-3167	-8057	-4224.55		0	0	8333	0			0	No, Vu<V
SLV 15	10	-10630	-5184	3495.77		28464	1.3338	14026	5238			1.01	Si
SLV 4	7.9	-8377	4547	2900.61		23345	1.2816	13002	4666			1.03	Si
SLV 4	10	-957	4173	-1977.42		0	0	8333	0			0	No, Vu<V
SLV 14	7.9	-4955	-7252	-4110.08		0	0	8333	0			0	No, Vu<V
SLV 14	10	-12793	-6775	3862.52		32299	1.4146	14793	5859			0.86	No, Vu<V
SLV 3	7.9	-8377	4547	2900.61		23345	1.2816	13002	4666			1.03	Si
SLV 3	10	-957	4173	-1977.42		0	0	8333	0			0	No, Vu<V
SLV 11	7.9	-2906	-4585	-1864.28		26239	0.3955	13581	1504			0.33	No, Vu<V
SLV 11	10	-4720	-54	1152.27		10897	1.5469	10513	4553			85	Si
SLV 13	7.9	-4955	-7252	-4110.08		0	0	8333	0			0	No, Vu<V
SLV 13	10	-12793	-6775	3862.52		32299	1.4146	14793	5859			0.86	No, Vu<V
SLV 1	7.9	-10164	5352	3015.08		25377	1.4305	13409	5371			1	Si
SLV 1	10	-3120	2582	-1610.67		14440	0.7717	11221	2425			0.94	No, Vu<V

Verifica a pressoflessione fuori piano D.M. 17-01-18 (N.T.C.)

quota 9.675 Wa 0.05 denominatore 8 γM = 2

Comb.	fd	Sa	σ0	N	M	Mc	Coeff.s.	Verifica
SLV 3	143750	0.45	4388	-1901	189.26	256.55	1.36	Si
SLV 4	143750	0.45	4388	-1901	189.26	256.55	1.36	Si
SLV 7	143750	0.45	5331	-2309	189.26	309.15	1.63	Si
SLV 8	143750	0.45	5331	-2309	189.26	309.15	1.63	Si
SLV 2	143750	0.45	9282	-4020	189.26	520.07	2.75	Si
SLV 1	143750	0.45	9282	-4020	189.26	520.07	2.75	Si
SLV 11	143750	0.45	11032	-4778	189.26	608.55	3.22	Si
SLV 12	143750	0.45	11032	-4778	189.26	608.55	3.22	Si
SLV 6	143750	0.45	21642	-9374	189.26	1079.88	5.71	Si
SLV 5	143750	0.45	21642	-9374	189.26	1079.88	5.71	Si

Verifica dei meccanismi locali di collasso con analisi cinematica lineare

forza di aggancio al piano = 0 quota mezzeria = 9.675 Wa = 0.05 Ta = 0.0752

Comb.	N top	N base	V orto	α0	M*	e*	a0*	aLim	Verifica
SLV 12	-3319	-2906	-188	0.011	562.1	0.906	0.1791	11.49604	No
SLV 11	-3319	-2906	-188	0.011	562.1	0.906	0.1791	11.49604	No
SLV 5	-4446	-10426	188	0.017	674.3	0.917	0.26213	11.49604	No
SLV 6	-4446	-10426	188	0.017	674.3	0.917	0.26213	11.49604	No

Comb.	N top	N base	V orto	α0	M*	e*	a0*	aLim	Verifica
SLV 16	-3404	-3167	-147	0.02	570.5	0.907	0.32155	12.98863	No
SLV 15	-3404	-3167	-147	0.02	570.5	0.907	0.32155	12.98863	No
SLV 1	-4361	-10164	148	0.023	665.8	0.916	0.36802	12.98863	No
SLV 2	-4361	-10164	148	0.023	665.8	0.916	0.36802	12.98863	No
SLV 8	-3524	-4468	-127	0.025	582.4	0.908	0.39372	11.49604	No
SLV 7	-3524	-4468	-127	0.025	582.4	0.908	0.39372	11.49604	No

Tabella dei coefficienti di sicurezza minimi

Stato limite	Coeff.s.	Comb.	Verifica
PF_SLU	3.563	SLU 81	Si
V_SLU	1.622	SLU 81	Si
PF_SLV	0	SLV 3	No
V_SLV	0	SLV 3	No
PFFP_SLV	1.356	SLV 3	Si
R_SLV	0.016	SLV 11	No

Maschio 185

Verifiche condotte secondo D.M. 17-01-18 (N.T.C.)

Dati geometrici

X ini.	Y ini.	X fin.	Y fin.	Quota i.	Quota.s	l	Sp.	h netta	h ini.	h fin.	a	a.s.,sx	a.s.,dx
-16.45	-4.784	-16.992	-4.784	L5	L6	0.542	0.3	3.55	3.55	3.55			

Caratteristiche del materiale

(Circolare 7 21-01-19 C8.5.I) Muratura in mattoni pieni e malta di calce LC2_Corti

fb	fk	fvk0	fmedio	τ0	fv0	μ	ϕ	fv,lim	E	G	FC
600000			345000	9000	20000	0.58	0.77	32500	320000000	128000000	1.2

Verifica a pressoflessione nel piano secondo D.M. 17-01-18 NTC §7.8.2.2.1 in combinazioni non sismiche, γM = 3

Comb.	Quota	N	M	σ0	Mu	c.s.	Verifica
SLU 39	7.9	-3470	103.02	21337	694.22	6.739	Si
SLU 39	11.01	-2067	8.92	12707	472.79	52.975	Si
SLU 84	7.9	-4784	119.67	29415	828.45	6.923	Si
SLU 84	11.01	-2693	19.51	16561	581.62	29.811	Si
SLU 82	7.9	-4675	122.15	28744	819.98	6.713	Si
SLU 82	11.01	-2599	15.94	15980	566.25	35.526	Si
SLU 40	7.9	-3849	119.08	23667	740.18	6.216	Si
SLU 40	11.01	-2143	6.43	13177	486.91	75.737	Si
SLU 73	7.9	-4841	119.66	29764	832.65	6.958	Si
SLU 73	11.01	-2581	17.6	15873	563.37	32.017	Si
SLU 42	7.9	-3958	116.6	24339	752.34	6.452	Si
SLU 42	11.01	-2237	10	13758	504.04	50.404	Si
SLU 41	7.9	-3579	100.54	22009	708.07	7.043	Si
SLU 41	11.01	-2161	12.5	13288	490.21	39.23	Si
SLU 34	7.9	-4124	114.1	25359	769.87	6.747	Si
SLU 34	11.01	-2220	11.66	13650	500.9	42.971	Si
SLU 31	7.9	-4015	116.58	24687	758.46	6.506	Si
SLU 31	11.01	-2126	8.09	13070	483.7	59.823	Si
SLU 33	7.9	-3877	106.02	23837	743.3	7.011	Si
SLU 33	11.01	-2155	12.34	13249	489.06	39.636	Si

Verifica a pressoflessione nel piano secondo D.M. 17-01-18 NTC §7.8.2.2.1 in combinazioni sismiche, γM = 2

Comb.	Quota	N	M	σ0	Mu	c.s.	Verifica
SLV 11	7.9	-1675	-1482.46	0	0	0	No, e>l/2
SLV 11	11.01	-2916	-333.41	17931	674.43	2.023	Si
SLV 2	7.9	-3294	976.62	0	0	0	No, e>l/2
SLV 2	11.01	-1583	96.81	9733	394.86	4.079	Si
SLV 5	7.9	-4517	1585.59	0	0	0	No, e>l/2
SLV 5	11.01	-640	376.78	0	0	0	No, e>l/2
SLV 9	7.9	-4668	1279.09	0	0	0	No, e>l/2
SLV 9	11.01	-543	397.48	0	0	0	No, e>l/2
SLV 7	7.9	-1524	-1175.97	0	0	0	No, e>l/2
SLV 7	11.01	-3013	-354.11	18524	692.79	1.956	Si
SLV 1	7.9	-3294	976.62	0	0	0	No, e>l/2
SLV 1	11.01	-1583	96.81	9733	394.86	4.079	Si
SLV 8	7.9	-1524	-1175.97	0	0	0	No, e>l/2
SLV 8	11.01	-3013	-354.11	18524	692.79	1.956	Si
SLV 6	7.9	-4517	1585.59	0	0	0	No, e>l/2
SLV 6	11.01	-640	376.78	0	0	0	No, e>l/2
SLV 10	7.9	-4668	1279.09	0	0	0	No, e>l/2
SLV 10	11.01	-543	397.48	0	0	0	No, e>l/2
SLV 12	7.9	-1675	-1482.46	0	0	0	No, e>l/2
SLV 12	11.01	-2916	-333.41	17931	674.43	2.023	Si

Verifica a taglio nel piano secondo D.M. 17-01-18 (N.T.C.) §7.8.2.2.2 con rottura per scorrimento in combinazioni non sismiche, γM = 3

Comb.	Quota	N	V par	M	σ0	σN	l'	fvd	Vt scorr.	Vt fess.diag.	Vt,lim	c.s.	Verifica
SLU 26	7.9	-3922	-5	83.3		24116	0.5421	8771	1426			266.43	Si
SLU 26	11.01	-2060	161	19.4		12669	0.5421	7245	1178			7.32	Si
SLU 44	7.9	-4438	-17	66.11		27289	0.5421	9194	1495			90.47	Si
SLU 44	11.01	-2273	171	30.81		13976	0.5421	7419	1207			7.04	Si
SLU 47	7.9	-4547	-19	63.63		27961	0.5421	9284	1510			79.73	Si
SLU 47	11.01	-2367	178	34.38		14557	0.5421	7496	1219			6.86	Si
SLU 65	7.9	-4638	-1	88.86		28521	0.5421	9358	1522			1000	Si
SLU 65	11.01	-2422	173	25.34		14892	0.5421	7541	1226			7.09	Si
SLU 76	7.9	-4950	21	117.18		30436	0.5421	9614	1563			75.94	Si
SLU 76	11.01	-2676	170	21.17		16453	0.5421	7749	1260			7.4	Si

Comb.	Quota	N	V par	M	σ0	σN	l'	fvd	Vt scorr.	Vt fess.diag.	Vt,lim	c.s.	Verifica
SLU 55	7.9	-4750	5	94.43		29204	0.5421	9449	1537			313.39	Si
SLU 55	11.01	-2527	169	26.63		15538	0.5421	7627	1240			7.36	Si
SLU 5	7.9	-3722	-21	60.55		22884	0.5421	8607	1400			66.54	Si
SLU 5	11.01	-1911	159	24.87		11753	0.5421	7123	1158			7.27	Si
SLU 23	7.9	-3813	-3	85.78		23444	0.5421	8681	1412			479.49	Si
SLU 23	11.01	-1966	155	15.83		12088	0.5421	7167	1166			7.54	Si
SLU 2	7.9	-3613	-19	63.03		22213	0.5421	8517	1385			74.36	Si
SLU 2	11.01	-1817	153	21.3		11173	0.5421	7045	1146			7.5	Si
SLU 68	7.9	-4748	-3	86.38		29192	0.5421	9448	1537			472.37	Si
SLU 68	11.01	-2516	179	28.91		15472	0.5421	7618	1239			6.9	Si

Verifica a taglio nel piano secondo D.M. 17-01-18 (N.T.C.) §7.8.2.2.2 con rottura per scorrimento in combinazioni sismiche, γM = 2

Comb.	Quota	N	V par	M	σ0	σN	l'	fvd	Vt scorr.	Vt fess.diag.	Vt,lim	c.s.	Verifica
SLV 1	7.9	-3294	845	976.62		0	0	8333	0			0	No, Vu<V
SLV 1	11.01	-1583	-1033	96.81		9733	0.5421	10280	1672			1.62	Si
SLV 9	7.9	-4668	504	1279.09		0	0	8333	0			0	No, Vu<V
SLV 9	11.01	-543	-1126	397.48		0	0	8333	0			0	No, Vu<V
SLV 12	7.9	-1675	-799	-1482.46		0	0	8333	0			0	No, Vu<V
SLV 12	11.01	-2916	1655	-333.41		20675	0.4702	12468	1759			1.06	Si
SLV 11	7.9	-1675	-799	-1482.46		0	0	8333	0			0	No, Vu<V
SLV 11	11.01	-2916	1655	-333.41		20675	0.4702	12468	1759			1.06	Si
SLV 5	7.9	-4517	872	1585.59		0	0	8333	0			0	No, Vu<V
SLV 5	11.01	-640	-1532	376.78		0	0	8333	0			0	No, Vu<V
SLV 2	7.9	-3294	845	976.62		0	0	8333	0			0	No, Vu<V
SLV 2	11.01	-1583	-1033	96.81		9733	0.5421	10280	1672			1.62	Si
SLV 8	7.9	-1524	-432	-1175.97		0	0	8333	0			0	No, Vu<V
SLV 8	11.01	-3013	1249	-354.11		21805	0.4605	12694	1754			1.4	Si
SLV 10	7.9	-4668	504	1279.09		0	0	8333	0			0	No, Vu<V
SLV 10	11.01	-543	-1126	397.48		0	0	8333	0			0	No, Vu<V
SLV 7	7.9	-1524	-432	-1175.97		0	0	8333	0			0	No, Vu<V
SLV 7	11.01	-3013	1249	-354.11		21805	0.4605	12694	1754			1.4	Si
SLV 6	7.9	-4517	872	1585.59		0	0	8333	0			0	No, Vu<V
SLV 6	11.01	-640	-1532	376.78		0	0	8333	0			0	No, Vu<V

Verifica a pressoflessione fuori piano D.M. 17-01-18 (N.T.C.)

quota 9.675 Wa 0.05 denominatore 8 γM = 2

Comb.	fd	Sa	σ0	N	M	Mc	Coeff.s.	Verifica
SLV 5	143750	0.45	0	1335	69.41	0	0	No, Trazione
SLV 10	143750	0.45	0	1540	69.41	0	0	No, Trazione
SLV 9	143750	0.45	0	1540	69.41	0	0	No, Trazione
SLV 6	143750	0.45	0	1335	69.41	0	0	No, Trazione
SLV 13	143750	0.45	6209	-1010	69.41	143.76	2.07	Si
SLV 14	143750	0.45	6209	-1010	69.41	143.76	2.07	Si
SLV 1	143750	0.45	10406	-1692	69.41	232.23	3.35	Si
SLV 2	143750	0.45	10406	-1692	69.41	232.23	3.35	Si
SLV 15	143750	0.45	20906	-3400	69.41	422.74	6.09	Si
SLV 16	143750	0.45	20906	-3400	69.41	422.74	6.09	Si

Verifica dei meccanismi locali di collasso con analisi cinematica lineare

forza di aggancio al piano = 0 quota mezzeria = 9.675 Wa = 0.05 Ta = 0.0702

Comb.	N top	N base	V orto	α0	M*	e*	a0*	aLim	Verifica
SLV 10	3279	-4668	41	0	0	0	0	10.62261	No, Trazione
SLV 14	117	-3796	6	0	0	0	0	11.94331	No, Trazione
SLV 5	3151	-4517	44	0	0	0	0	10.62261	No, Trazione
SLV 6	3151	-4517	44	0	0	0	0	10.62261	No, Trazione
SLV 9	3279	-4668	41	0	0	0	0	10.62261	No, Trazione
SLV 13	117	-3796	6	0	0	0	0	11.94331	No, Trazione
SLV 12	-6184	-1675	-47	0.038	710.9	0.965	0.57899	10.62261	No
SLV 11	-6184	-1675	-47	0.038	710.9	0.965	0.57899	10.62261	No
SLV 8	-6312	-1524	-44	0.039	723.9	0.966	0.5868	10.62261	No
SLV 7	-6312	-1524	-44	0.039	723.9	0.966	0.5868	10.62261	No

Tabella dei coefficienti di sicurezza minimi

Stato limite	Coeff.s.	Comb.	Verifica
PF_SLU	6.216	SLU 40	Si
V_SLU	6.859	SLU 47	Si
PF_SLV	0	SLV 1	No
V_SLV	0	SLV 1	No
PFFP_SLV	0	SLV 10	No
R_SLV	0	SLV 14	No

Maschio 186

Verifiche condotte secondo D.M. 17-01-18 (N.T.C.)

Dati geometrici

X ini.	Y ini.	X fin.	Y fin.	Quota i.	Quota.s	l	Sp.	h netta	h ini.	h fin.	a	a.s.,sx	a.s.,dx
-13.753	-4.784	-14.61	-4.784	L5	L6	0.858	0.3	3.55	3.55	3.55			

Caratteristiche del materiale

(Circolare 7 21-01-19 C8.5.I) Muratura in mattoni pieni e malta di calce LC2_Corti

fb	fk	fvk0	fmedio	τ0	fv0	μ	ϕ	fv,lim	E	G	FC
600000			345000	9000	20000	0.58	0.77	32500	320000000	128000000	1.2

Verifica a pressoflessione nel piano secondo D.M. 17-01-18 NTC §7.8.2.2.1 in combinazioni non sismiche, γM = 3

Comb.	Quota	N	M	σ0	Mu	c.s.	Verifica
SLU 34	7.9	-4023	-214.75	15637	1393.84	6.49	Si
SLU 34	11.01	-2681	-12.66	10422	1002.57	79.214	Si
SLU 84	7.9	-5086	-251.85	19769	1651.51	6.558	Si
SLU 84	11.01	-3303	-22.05	12840	1193.13	54.12	Si
SLU 42	7.9	-4088	-230.3	15890	1410.91	6.126	Si
SLU 42	11.01	-2743	-12.97	10662	1022.21	78.836	Si
SLU 40	7.9	-3976	-229.42	15454	1381.36	6.021	Si
SLU 40	11.01	-2616	-9.84	10169	981.73	99.723	Si
SLU 41	7.9	-4072	-224.23	15830	1406.86	6.274	Si
SLU 41	11.01	-2716	-17.5	10556	1013.52	57.918	Si
SLU 39	7.9	-3960	-223.34	15394	1377.23	6.166	Si
SLU 39	11.01	-2589	-14.38	10063	972.9	67.669	Si
SLU 31	7.9	-3911	-213.87	15202	1363.99	6.378	Si
SLU 31	11.01	-2554	-9.53	9929	961.77	100.871	Si
SLU 81	7.9	-4958	-244.89	19273	1623.05	6.628	Si
SLU 81	11.01	-3149	-23.46	12240	1147.35	48.913	Si
SLU 33	7.9	-4028	-210.1	15658	1395.21	6.641	Si
SLU 33	11.01	-2668	-16.69	10371	998.4	59.82	Si
SLU 82	7.9	-4974	-250.96	19334	1626.54	6.481	Si
SLU 82	11.01	-3176	-18.92	12347	1155.56	61.062	Si

Verifica a pressoflessione nel piano secondo D.M. 17-01-18 NTC §7.8.2.2.1 in combinazioni sismiche, γM = 2

Comb.	Quota	N	M	σ0	Mu	c.s.	Verifica
SLV 4	7.9	-1519	329.29	5903	619.69	1.882	Si
SLV 4	11.01	689	-60.18	0	0	0	No, Trazione
SLV 11	7.9	-1753	-492.83	6815	709.83	1.44	Si
SLV 11	11.01	-3437	368.04	13360	1312.59	3.566	Si
SLV 3	7.9	-1519	329.29	5903	619.69	1.882	Si
SLV 3	11.01	689	-60.18	0	0	0	No, Trazione
SLV 8	7.9	-900	-175.34	3499	374.89	2.138	Si
SLV 8	11.01	-1633	283.34	6348	663.83	2.343	Si
SLV 6	7.9	-5511	208.15	21421	1948.76	9.362	Si
SLV 6	11.01	-1011	-415.83	3928	419.4	1.009	Si
SLV 2	7.9	-2902	444.33	11280	1129.41	2.542	Si
SLV 2	11.01	876	-269.93	0	0	0	No, Trazione
SLV 12	7.9	-1753	-492.83	6815	709.83	1.44	Si
SLV 12	11.01	-3437	368.04	13360	1312.59	3.566	Si
SLV 7	7.9	-900	-175.34	3499	374.89	2.138	Si
SLV 7	11.01	-1633	283.34	6348	663.83	2.343	Si
SLV 1	7.9	-2902	444.33	11280	1129.41	2.542	Si
SLV 1	11.01	876	-269.93	0	0	0	No, Trazione
SLV 5	7.9	-5511	208.15	21421	1948.76	9.362	Si
SLV 5	11.01	-1011	-415.83	3928	419.4	1.009	Si

Verifica a taglio nel piano secondo D.M. 17-01-18 (N.T.C.) §7.8.2.2.2 con rottura per scorrimento in combinazioni non sismiche, γM = 3

Comb.	Quota	N	V par	M	σ0	σN	I'	fvd	Vt scorr.	Vt fess.diag.	Vt,lim	c.s.	Verifica
SLU 42	7.9	-4088	-457	-230.3		15890	0.8576	7674	1974			4.32	Si
SLU 42	11.01	-2743	279	-12.97		10662	0.8576	6977	1795			6.43	Si
SLU 76	7.9	-5021	-476	-236.3		19517	0.8576	8158	2099			4.41	Si
SLU 76	11.01	-3241	321	-21.74		12600	0.8576	7236	1861			5.79	Si
SLU 82	7.9	-4974	-504	-250.96		19334	0.8576	8133	2092			4.15	Si
SLU 82	11.01	-3176	313	-18.92		12347	0.8576	7202	1853			5.91	Si
SLU 39	7.9	-3960	-446	-223.34		15394	0.8576	7608	1957			4.39	Si
SLU 39	11.01	-2589	245	-14.38		10063	0.8576	6897	1774			7.25	Si
SLU 41	7.9	-4072	-445	-224.23		15830	0.8576	7666	1972			4.43	Si
SLU 41	11.01	-2716	246	-17.5		10556	0.8576	6963	1791			7.29	Si
SLU 73	7.9	-4909	-477	-235.41		19081	0.8576	8100	2084			4.37	Si
SLU 73	11.01	-3115	320	-18.61		12107	0.8576	7170	1845			5.76	Si
SLU 84	7.9	-5086	-504	-251.85		19769	0.8576	8191	2107			4.18	Si
SLU 84	11.01	-3303	314	-22.05		12840	0.8576	7268	1870			5.95	Si
SLU 81	7.9	-4958	-493	-244.89		19273	0.8576	8125	2090			4.24	Si
SLU 81	11.01	-3149	280	-23.46		12240	0.8576	7188	1849			6.61	Si
SLU 40	7.9	-3976	-458	-229.42		15454	0.8576	7616	1959			4.28	Si
SLU 40	11.01	-2616	278	-9.84		10169	0.8576	6911	1778			6.39	Si
SLU 83	7.9	-5070	-492	-245.77		19709	0.8576	8183	2105			4.28	Si
SLU 83	11.01	-3276	281	-26.58		12733	0.8576	7253	1866			6.65	Si

Verifica a taglio nel piano secondo D.M. 17-01-18 (N.T.C.) §7.8.2.2.2 con rottura per scorrimento in combinazioni sismiche, γM = 2

Comb.	Quota	N	V par	M	σ0	σN	I'	fvd	Vt scorr.	Vt fess.diag.	Vt,lim	c.s.	Verifica
SLV 3	7.9	-1519	2000	329.29		7961	0.6358	9926	1893			0.95	No, Vu<V
SLV 3	11.01	689	64	-60.18		0	0	8333	0			0	No, Vu<V
SLV 12	7.9	-1753	-1470	-492.83		13191	0.443	10971	1458			0.99	No, Vu<V
SLV 12	11.01	-3437	1218	368.04		13360	0.8576	11005	2831			2.32	Si
SLV 1	7.9	-2902	2269	444.33		11697	0.827	10673	2648			1.17	Si
SLV 1	11.01	876	-490	-269.93		0	0	8333	0			0	No, Vu<V
SLV 6	7.9	-5511	883	208.15		21421	0.8576	12618	3246			3.68	Si
SLV 6	11.01	-1011	-862	-415.83		64827	0.052	16250	253			0.29	No, Vu<V
SLV 2	7.9	-2902	2269	444.33		11697	0.827	10673	2648			1.17	Si
SLV 2	11.01	876	-490	-269.93		0	0	8333	0			0	No, Vu<V
SLV 4	7.9	-1519	2000	329.29		7961	0.6358	9926	1893			0.95	No, Vu<V
SLV 4	11.01	689	64	-60.18		0	0	8333	0			0	No, Vu<V
SLV 11	7.9	-1753	-1470	-492.83		13191	0.443	10971	1458			0.99	No, Vu<V
SLV 11	11.01	-3437	1218	368.04		13360	0.8576	11005	2831			2.32	Si
SLV 15	7.9	-4362	-2856	-729.02		18524	0.785	12038	2835			0.99	No, Vu<V
SLV 15	11.01	-5324	846	222.15		20694	0.8576	12472	3209			3.79	Si
SLV 16	7.9	-4362	-2856	-729.02		18524	0.785	12038	2835			0.99	No, Vu<V
SLV 16	11.01	-5324	846	222.15		20694	0.8576	12472	3209			3.79	Si
SLV 5	7.9	-5511	883	208.15		21421	0.8576	12618	3246			3.68	Si
SLV 5	11.01	-1011	-862	-415.83		64827	0.052	16250	253			0.29	No, Vu<V

Verifica a pressoflessione fuori piano D.M. 17-01-18 (N.T.C.)

quota 9.675 Wa 0.05 denominatore 8 γM = 2

Comb.	fd	Sa	σ0	N	M	Mc	Coeff.s.	Verifica
SLV 4	143750	0.45	0	250	109.8	0	0	No, Trazione
SLV 1	143750	0.45	0	-48	109.8	0	0	No, e>t/2
SLV 2	143750	0.45	0	-48	109.8	0	0	No, e>t/2
SLV 3	143750	0.45	0	250	109.8	0	0	No, Trazione
SLV 8	143750	0.45	7157	-1841	109.8	260	2.37	Si
SLV 7	143750	0.45	7157	-1841	109.8	260	2.37	Si
SLV 5	143750	0.45	11021	-2835	109.8	386.95	3.52	Si
SLV 6	143750	0.45	11021	-2835	109.8	386.95	3.52	Si
SLV 12	143750	0.45	15284	-3932	109.8	516.04	4.7	Si
SLV 11	143750	0.45	15284	-3932	109.8	516.04	4.7	Si

Verifica dei meccanismi locali di collasso con analisi cinematica lineare

forza di aggancio al piano = 0 quota mezzeria = 9.675 Wa = 0.05 Ta = 0.0702

Comb.	N top	N base	V orto	α0	M*	e*	a0*	aLim	Verifica
SLV 3	830	-1519	-4	0	0	0	0	11.94331	No, Trazione
SLV 4	830	-1519	-4	0	0	0	0	11.94331	No, Trazione
SLV 2	1370	-2902	18	0	0	0	0	11.94331	No, Trazione
SLV 1	1370	-2902	18	0	0	0	0	11.94331	No, Trazione
SLV 5	-135	-5511	38	0.039	171	0.943	0.60023	10.62261	No
SLV 6	-135	-5511	38	0.039	171	0.943	0.60023	10.62261	No
SLV 15	-5271	-4362	-17	0.045	666	0.945	0.69442	11.94331	No
SLV 16	-5271	-4362	-17	0.045	666	0.945	0.69442	11.94331	No
SLV 11	-3766	-1753	-37	0.042	513.7	0.932	0.65049	10.62261	No
SLV 12	-3766	-1753	-37	0.042	513.7	0.932	0.65049	10.62261	No

Tabella dei coefficienti di sicurezza minimi

Stato limite	Coeff.s.	Comb.	Verifica
PF_SLU	6.021	SLU 40	Si
V_SLU	4.148	SLU 82	Si
PF_SLV	0	SLV 4	No
V_SLV	0	SLV 1	No
PFFP_SLV	0	SLV 4	No
R_SLV	0	SLV 4	No

Maschio 187

Verifiche condotte secondo D.M. 17-01-18 (N.T.C.)

Dati geometrici

X ini.	Y ini.	X fin.	Y fin.	Quota i.	Quota.s	l	Sp.	h netta	h ini.	h fin.	a	a.s.,sx	a.s.,dx
-15.038	2.203	-15.038	6.536	L5	L6	4.332	0.14	3.55	3.55	3.55			

Caratteristiche del materiale

(Circolare 7 21-01-19 C8.5.I) Muratura in mattoni pieni e malta di calce LC2_Corti

fb	fk	fvk0	fmedio	τ0	fv0	μ	ϕ	fv,lim	E	G	FC
600000			345000	9000	20000	0.58	0.77	32500	320000000	128000000	1.2

Verifica a pressoflessione nel piano secondo D.M. 17-01-18 NTC §7.8.2.2.1 in combinazioni non sismiche, γM = 3

Comb.	Quota	N	M	σ0	Mu	c.s.	Verifica
SLU 9	7.9	-11381	653.37	18763	18974.11	29.04	Si
SLU 9	11.45	-5310	1341.21	8755	10266.72	7.655	Si
SLU 8	7.9	-11383	646.09	18767	18976.49	29.371	Si
SLU 8	11.45	-5312	1339.21	8758	10269.77	7.669	Si
SLU 17	7.9	-13139	426.86	21662	20892.31	48.945	Si
SLU 17	11.45	-5952	1342.45	9814	11340.79	8.448	Si
SLU 7	7.9	-11731	588.53	19342	19378.48	32.927	Si
SLU 7	11.45	-5546	1335.16	9144	10665.05	7.988	Si
SLU 29	7.9	-13301	402.57	21930	21056.09	52.305	Si
SLU 29	11.45	-6109	1387.7	10073	11597.73	8.358	Si
SLU 50	7.9	-14045	709.05	23156	21775.35	30.711	Si
SLU 50	11.45	-6548	1493.39	10796	12304.4	8.239	Si
SLU 30	7.9	-13299	409.85	21926	21054.06	51.37	Si
SLU 30	11.45	-6108	1389.69	10070	11594.81	8.343	Si
SLU 51	7.9	-14043	716.34	23152	21773.45	30.396	Si
SLU 51	11.45	-6546	1495.38	10793	12301.54	8.226	Si
SLU 16	7.9	-13141	419.57	21665	20894.37	49.799	Si
SLU 16	11.45	-5954	1340.46	9817	11343.74	8.463	Si
SLU 6	7.9	-11733	581.24	19345	19380.8	33.344	Si
SLU 6	11.45	-5548	1333.16	9147	10668.06	8.002	Si

Verifica a pressoflessione nel piano secondo D.M. 17-01-18 NTC §7.8.2.2.1 in combinazioni sismiche, γM = 2

Comb.	Quota	N	M	σ0	Mu	c.s.	Verifica
SLV 12	7.9	-5321	9251.71	8773	10699.07	1.156	Si
SLV 12	11.45	-2326	2244.53	3835	4880.35	2.174	Si
SLV 11	7.9	-5321	9251.71	8773	10699.07	1.156	Si
SLV 11	11.45	-2326	2244.53	3835	4880.35	2.174	Si
SLV 9	7.9	-15345	-7364.48	25300	26358.3	3.579	Si
SLV 9	11.45	-7977	438.59	13152	15419.7	35.157	Si
SLV 8	7.9	-8888	6959.01	14654	16944.21	2.435	Si
SLV 8	11.45	-2908	728.48	4794	6051.89	8.308	Si
SLV 7	7.9	-8888	6959.01	14654	16944.21	2.435	Si
SLV 7	11.45	-2908	728.48	4794	6051.89	8.308	Si
SLV 5	7.9	-18912	-9657.19	31181	30513.25	3.16	Si
SLV 5	11.45	-8559	-1077.46	14111	16399.01	15.22	Si

Comb.	Quota	N	M	σ0	Mu	c.s.	Verifica
SLV 10	7.9	-15345	-7364.48	25300	26358.3	3.579	Si
SLV 10	11.45	-7977	438.59	13152	15419.7	35.157	Si
SLV 6	7.9	-18912	-9657.19	31181	30513.25	3.16	Si
SLV 6	11.45	-8559	-1077.46	14111	16399.01	15.22	Si
SLV 16	7.9	-4668	6110.87	7697	9475.49	1.551	Si
SLV 16	11.45	-3625	3381.18	5976	7468.15	2.209	Si
SLV 15	7.9	-4668	6110.87	7697	9475.49	1.551	Si
SLV 15	11.45	-3625	3381.18	5976	7468.15	2.209	Si

Verifica a taglio nel piano secondo D.M. 17-01-18 (N.T.C.) §7.8.2.2.2 con rottura per scorrimento in combinazioni non sismiche, γM = 3

Comb.	Quota	N	V par	M	σ0	σN	l'	fvd	Vt scorr.	Vt fess.diag.	Vt,lim	c.s.	Verifica
SLU 81	7.9	-18158	26	-572.6		29938	4.3324	9547	5791			224.43	Si
SLU 81	11.45	-7982	27	773.77		13160	4.3324	7310	4434			167.3	Si
SLU 8	7.9	-11383	-25	646.09		18767	4.3324	8058	4887			194.09	Si
SLU 8	11.45	-5312	-23	1339.21		8758	4.3324	6723	4078			174.14	Si
SLU 61	7.9	-16238	24	-321.79		26771	4.3324	9125	5535			234.34	Si
SLU 61	11.45	-7183	24	727.28		11842	4.3324	7135	4327			178.66	Si
SLU 19	7.9	-13576	23	-384.75		22382	4.3324	8540	5180			228.22	Si
SLU 19	11.45	-5947	23	573.11		9805	4.3324	6863	4163			179.67	Si
SLU 40	7.9	-15494	28	-628.27		25545	4.3324	8962	5436			194.77	Si
SLU 40	11.45	-6744	28	621.59		11119	4.3324	7038	4269			149.91	Si
SLU 73	7.9	-17401	28	-463.37		28690	4.3324	9381	5690			205.75	Si
SLU 73	11.45	-7704	28	776.56		12701	4.3324	7249	4397			154.93	Si
SLU 31	7.9	-14739	27	-526.33		24301	4.3324	8796	5335			199.57	Si
SLU 31	11.45	-6468	27	622.38		10663	4.3324	6977	4232			154.87	Si
SLU 39	7.9	-15496	25	-635.56		25549	4.3324	8962	5436			218.48	Si
SLU 39	11.45	-6746	25	619.6		11122	4.3324	7039	4269			167.75	Si
SLU 82	7.9	-18156	29	-565.31		29934	4.3324	9547	5790			200.86	Si
SLU 82	11.45	-7980	30	775.77		13157	4.3324	7310	4434			150.14	Si
SLU 52	7.9	-15483	22	-219.85		25527	4.3324	8959	5434			242.13	Si
SLU 52	11.45	-6906	23	728.08		11386	4.3324	7074	4290			185.97	Si

Verifica a taglio nel piano secondo D.M. 17-01-18 (N.T.C.) §7.8.2.2.2 con rottura per scorrimento in combinazioni sismiche, γM = 2

Comb.	Quota	N	V par	M	σ0	σN	l'	fvd	Vt scorr.	Vt fess.diag.	Vt,lim	c.s.	Verifica
SLV 6	7.9	-18912	-7460	-9657.19		31181	4.3324	14570	8837			1.18	Si
SLV 6	11.45	-8559	-5574	-1077.46		14111	4.3324	11156	6766			1.21	Si
SLV 7	7.9	-8888	8287	6959.01		15299	4.1497	11393	6619			0.8	No, Vu<V
SLV 7	11.45	-2908	6584	728.48		4794	4.3324	9292	5636			0.86	No, Vu<V
SLV 10	7.9	-15345	-8262	-7364.48		25300	4.3324	13393	8124			0.98	No, Vu<V
SLV 10	11.45	-7977	-6557	438.59		13152	4.3324	10964	6650			1.01	Si
SLV 5	7.9	-18912	-7460	-9657.19		31181	4.3324	14570	8837			1.18	Si
SLV 5	11.45	-8559	-5574	-1077.46		14111	4.3324	11156	6766			1.21	Si
SLV 11	7.9	-5321	7486	9251.71		29634	1.2826	14260	2561			0.34	No, Vu<V
SLV 11	11.45	-2326	5600	2244.53		4610	3.6036	9255	4669			0.83	No, Vu<V
SLV 8	7.9	-8888	8287	6959.01		15299	4.1497	11393	6619			0.8	No, Vu<V
SLV 8	11.45	-2908	6584	728.48		4794	4.3324	9292	5636			0.86	No, Vu<V
SLV 12	7.9	-5321	7486	9251.71		29634	1.2826	14260	2561			0.34	No, Vu<V
SLV 12	11.45	-2326	5600	2244.53		4610	3.6036	9255	4669			0.83	No, Vu<V
SLV 14	7.9	-7676	-3685	1126.01		12655	4.3324	10864	6590			1.79	Si
SLV 14	11.45	-5320	-3449	2839.4		8771	4.3324	10088	6118			1.77	Si
SLV 13	7.9	-7676	-3685	1126.01		12655	4.3324	10864	6590			1.79	Si
SLV 13	11.45	-5320	-3449	2839.4		8771	4.3324	10088	6118			1.77	Si
SLV 9	7.9	-15345	-8262	-7364.48		25300	4.3324	13393	8124			0.98	No, Vu<V
SLV 9	11.45	-7977	-6557	438.59		13152	4.3324	10964	6650			1.01	Si

Verifica a pressoflessione fuori piano D.M. 17-01-18 (N.T.C.)

quota 9.675 Wa 0.03 denominatore 8 γM = 2

Comb.	fd	Sa	σ0	N	M	Mc	Coeff.s.	Verifica
SLV 12	143750	0.45	0	-3776	283.52	0	0	No, e>t/2
SLV 11	143750	0.45	0	-3776	283.52	0	0	No, e>t/2
SLV 15	143750	0.45	6947	-4214	283.52	278.2	0.98	No, M>Mu
SLV 16	143750	0.45	6947	-4214	283.52	278.2	0.98	No, M>Mu
SLV 8	143750	0.45	9380	-5689	283.52	367.67	1.3	Si
SLV 7	143750	0.45	9380	-5689	283.52	367.67	1.3	Si
SLV 13	143750	0.45	10721	-6502	283.52	415.24	1.46	Si
SLV 14	143750	0.45	10721	-6502	283.52	415.24	1.46	Si
SLV 4	143750	0.45	17462	-10591	283.52	635.45	2.24	Si
SLV 3	143750	0.45	17462	-10591	283.52	635.45	2.24	Si

Verifica dei meccanismi locali di collasso con analisi cinematica lineare

forza di aggancio al piano = 0 quota mezzeria = 9.675 Wa = 0.03 Ta = 0.1503

Comb.	N top	N base	V orto	α0	M*	e*	a0*	aLim	Verifica
SLV 6	-8559	-18912	-1	0.023	1178.8	0.93	0.36293	18.76006	No
SLV 5	-8559	-18912	-1	0.023	1178.8	0.93	0.36293	18.76006	No
SLV 9	-7977	-15345	-2	0.023	1120.2	0.927	0.36688	18.76006	No
SLV 10	-7977	-15345	-2	0.023	1120.2	0.927	0.36688	18.76006	No
SLV 2	-7260	-19565	0	0.024	1048	0.923	0.37565	18.76006	No
SLV 1	-7260	-19565	0	0.024	1048	0.923	0.37565	18.76006	No
SLV 3	-5565	-16558	1	0.025	878.2	0.913	0.39277	18.76006	No
SLV 4	-5565	-16558	1	0.025	878.2	0.913	0.39277	18.76006	No
SLV 14	-5320	-7676	-1	0.025	853.9	0.911	0.3969	18.76006	No
SLV 13	-5320	-7676	-1	0.025	853.9	0.911	0.3969	18.76006	No

Tabella dei coefficienti di sicurezza minimi

Stato limite	Coeff.s.	Comb.	Verifica
PF_SLU	7.655	SLU 9	Si
V_SLU	149.908	SLU 40	Si
PF_SLV	1.156	SLV 11	Si
V_SLV	0.342	SLV 11	No

Stato limite	Coeff.s.	Comb.	Verifica
PFFP_SLV	0	SLV 11	No
R_SLV	0.019	SLV 5	No

Maschio 188

Verifiche condotte secondo D.M. 17-01-18 (N.T.C.)

Dati geometrici

X ini.	Y ini.	X fin.	Y fin.	Quota i.	Quota.s	l	Sp.	h netta	h ini.	h fin.	a	a.s.,sx	a.s.,dx
-13.753	-4.784	-13.753	-3.254	L5	Z medio 959 cm	1.529	0.28	1.69	1.69	1.69			

Caratteristiche del materiale

(Circolare 7 21-01-19 C8.5.I) Muratura in mattoni pieni e malta di calce LC2_Corti

fb	fk	fvk0	fmedio	τ0	fv0	μ	ϕ	fv,lim	E	G	FC
600000			345000	9000	20000	0.58	0.77	32500	320000000	128000000	1.2

Verifica a pressoflessione nel piano secondo D.M. 17-01-18 NTC §7.8.2.2.1 in combinazioni non sismiche, γM = 3

Comb.	Quota	N	M	σ0	Mu	c.s.	Verifica
SLU 82	7.9	-10749	145.44	25101	5686.41	39.099	Si
SLU 82	9.59	-8474	576.63	19790	4905.76	8.508	Si
SLU 83	7.9	-10986	169.11	25654	5754.7	34.03	Si
SLU 83	9.59	-8715	591.36	20352	4999.06	8.454	Si
SLU 39	7.9	-8840	137.78	20645	5046.7	36.628	Si
SLU 39	9.59	-7023	554.74	16401	4289.12	7.732	Si
SLU 40	7.9	-8849	129.95	20665	5049.96	38.861	Si
SLU 40	9.59	-7030	542.27	16417	4292.2	7.915	Si
SLU 19	7.9	-8160	102.12	19057	4780.17	46.811	Si
SLU 19	9.59	-6466	470.68	15100	4027.84	8.558	Si
SLU 41	7.9	-9086	153.62	21218	5137.99	33.446	Si
SLU 41	9.59	-7271	557	16979	4400.73	7.901	Si
SLU 18	7.9	-8152	109.95	19037	4776.64	43.444	Si
SLU 18	9.59	-6459	483.15	15084	4024.59	8.33	Si
SLU 20	7.9	-8397	125.79	19610	4875.35	38.759	Si
SLU 20	9.59	-6707	485.41	15662	4142.31	8.534	Si
SLU 42	7.9	-9095	145.79	21239	5141.17	35.265	Si
SLU 42	9.59	-7277	544.53	16994	4403.73	8.087	Si
SLU 81	7.9	-10740	153.27	25081	5683.86	37.084	Si
SLU 81	9.59	-8468	589.1	19774	4903.11	8.323	Si

Verifica a pressoflessione nel piano secondo D.M. 17-01-18 NTC §7.8.2.2.1 in combinazioni sismiche, γM = 2

Comb.	Quota	N	M	σ0	Mu	c.s.	Verifica
SLV 6	7.9	-8981	-215.42	20973	5688.54	26.407	Si
SLV 6	9.59	-6702	759.04	15652	4468.57	5.887	Si
SLV 10	7.9	-9712	-539.24	22680	6047.83	11.216	Si
SLV 10	9.59	-7116	885.37	16617	4701.23	5.31	Si
SLV 3	7.9	-5757	778.59	13443	3917.54	5.032	Si
SLV 3	9.59	-4805	-100.81	11220	3336.57	33.097	Si
SLV 13	7.9	-9288	-585.21	21689	5841.34	9.982	Si
SLV 13	9.59	-6836	649.13	15964	4544.34	7.001	Si
SLV 9	7.9	-9712	-539.24	22680	6047.83	11.216	Si
SLV 9	9.59	-7116	885.37	16617	4701.23	5.31	Si
SLV 4	7.9	-5757	778.59	13443	3917.54	5.032	Si
SLV 4	9.59	-4805	-100.81	11220	3336.57	33.097	Si
SLV 14	7.9	-9288	-585.21	21689	5841.34	9.982	Si
SLV 14	9.59	-6836	649.13	15964	4544.34	7.001	Si
SLV 5	7.9	-8981	-215.42	20973	5688.54	26.407	Si
SLV 5	9.59	-6702	759.04	15652	4468.57	5.887	Si
SLV 7	7.9	-5333	732.61	12453	3662.03	4.999	Si
SLV 7	9.59	-4525	-337.06	10567	3160.78	9.378	Si
SLV 8	7.9	-5333	732.61	12453	3662.03	4.999	Si
SLV 8	9.59	-4525	-337.06	10567	3160.78	9.378	Si

Verifica a taglio nel piano secondo D.M. 17-01-18 (N.T.C.) §7.8.2.2.2 con rottura per scorrimento in combinazioni non sismiche, γM = 3

Comb.	Quota	N	V par	M	σ0	σN	l'	fvd	Vt scorr.	Vt fess.diag.	Vt,lim	c.s.	Verifica
SLU 39	7.9	-8840	-536	137.78		20645	1.5293	8308	3558			6.64	Si
SLU 39	9.59	-7023	-611	554.74		16401	1.5293	7742	3315			5.43	Si
SLU 82	7.9	-10749	-574	145.44		25101	1.5293	8902	3812			6.64	Si
SLU 82	9.59	-8474	-629	576.63		19790	1.5293	8194	3509			5.58	Si
SLU 42	7.9	-9095	-493	145.79		21239	1.5293	8387	3592			7.28	Si
SLU 42	9.59	-7277	-550	544.53		16994	1.5293	7821	3349			6.09	Si
SLU 60	7.9	-10051	-510	125.44		23473	1.5293	8685	3719			7.29	Si
SLU 60	9.59	-7904	-563	517.5		18457	1.5293	8017	3433			6.1	Si
SLU 40	7.9	-8849	-521	129.95		20665	1.5293	8311	3559			6.83	Si
SLU 40	9.59	-7030	-588	542.27		16417	1.5293	7744	3316			5.64	Si
SLU 18	7.9	-8152	-456	109.95		19037	1.5293	8094	3466			7.59	Si
SLU 18	9.59	-6459	-522	483.15		15084	1.5293	7567	3240			6.2	Si
SLU 81	7.9	-10740	-589	153.27		25081	1.5293	8900	3811			6.47	Si
SLU 81	9.59	-8468	-652	589.1		19774	1.5293	8192	3508			5.38	Si
SLU 41	7.9	-9086	-508	153.62		21218	1.5293	8385	3590			7.06	Si
SLU 41	9.59	-7271	-572	557		16979	1.5293	7819	3348			5.85	Si
SLU 84	7.9	-10994	-547	161.28		25675	1.5293	8979	3845			7.03	Si
SLU 84	9.59	-8722	-590	578.89		20368	1.5293	8271	3542			6	Si
SLU 83	7.9	-10986	-562	169.11		25654	1.5293	8976	3844			6.84	Si
SLU 83	9.59	-8715	-613	591.36		20352	1.5293	8269	3541			5.78	Si

Verifica a taglio nel piano secondo D.M. 17-01-18 (N.T.C.) §7.8.2.2.2 con rottura per scorrimento in combinazioni sismiche, γM = 2

Comb.	Quota	N	V par	M	σ0	σN	l'	fvd	Vt scorr.	Vt fess.diag.	Vt,lim	c.s.	Verifica
SLV 3	7.9	-5757	2882	778.59		13443	1.5293	11022	4720			1.64	Si
SLV 3	9.59	-4805	2700	-100.81		11220	1.5293	10577	4529			1.68	Si
SLV 9	7.9	-9712	-3846	-539.24		22680	1.5293	12869	5511			1.43	Si
SLV 9	9.59	-7116	-3620	885.37		16617	1.5293	11657	4992			1.38	Si
SLV 8	7.9	-5333	3187	732.61		12453	1.5293	10824	4635			1.45	Si
SLV 8	9.59	-4525	2981	-337.06		10567	1.5293	10447	4473			1.5	Si
SLV 14	7.9	-9288	-3541	-585.21		21689	1.5293	12671	5426			1.53	Si
SLV 14	9.59	-6836	-3339	649.13		15964	1.5293	11526	4936			1.48	Si
SLV 4	7.9	-5757	2882	778.59		13443	1.5293	11022	4720			1.64	Si
SLV 4	9.59	-4805	2700	-100.81		11220	1.5293	10577	4529			1.68	Si
SLV 10	7.9	-9712	-3846	-539.24		22680	1.5293	12869	5511			1.43	Si
SLV 10	9.59	-7116	-3620	885.37		16617	1.5293	11657	4992			1.38	Si
SLV 13	7.9	-9288	-3541	-585.21		21689	1.5293	12671	5426			1.53	Si
SLV 13	9.59	-6836	-3339	649.13		15964	1.5293	11526	4936			1.48	Si
SLV 6	7.9	-8981	-2424	-215.42		20973	1.5293	12528	5365			2.21	Si
SLV 6	9.59	-6702	-2282	759.04		15652	1.5293	11464	4909			2.15	Si
SLV 5	7.9	-8981	-2424	-215.42		20973	1.5293	12528	5365			2.21	Si
SLV 5	9.59	-6702	-2282	759.04		15652	1.5293	11464	4909			2.15	Si
SLV 7	7.9	-5333	3187	732.61		12453	1.5293	10824	4635			1.45	Si
SLV 7	9.59	-4525	2981	-337.06		10567	1.5293	10447	4473			1.5	Si

Verifica a pressoflessione fuori piano D.M. 17-01-18 (N.T.C.)

quota 8.745 Wa 0.05 denominatore 8 γM = 2

Comb.	fd	Sa	σ0	N	M	Mc	Coeff.s.	Verifica
SLV 8	143750	0.43	11313	-4844	41.48	615.43	14.84	Si
SLV 7	143750	0.43	11313	-4844	41.48	615.43	14.84	Si
SLV 4	143750	0.43	11629	-4980	41.48	630.8	15.21	Si
SLV 3	143750	0.43	11629	-4980	41.48	630.8	15.21	Si
SLV 12	143750	0.43	13113	-5615	41.48	701.75	16.92	Si
SLV 11	143750	0.43	13113	-5615	41.48	701.75	16.92	Si
SLV 1	143750	0.43	13699	-5866	41.48	729.19	17.58	Si
SLV 2	143750	0.43	13699	-5866	41.48	729.19	17.58	Si
SLV 16	143750	0.43	17628	-7548	41.48	904.32	21.8	Si
SLV 15	143750	0.43	17628	-7548	41.48	904.32	21.8	Si

Verifica dei meccanismi locali di collasso con analisi cinematica lineare

forza di aggancio al piano = 0 quota mezzeria = 8.745 Wa = 0.05 Ta = 0.017

Comb.	N top	N base	V orto	α0	M*	e*	a0*	aLim	Verifica
SLV 1	-5458	-6851	183	0.062	657.8	0.955	0.9404	4.66411	No
SLV 2	-5458	-6851	183	0.062	657.8	0.955	0.9404	4.66411	No
SLV 16	-6183	-8193	-176	0.065	731.5	0.959	0.98461	4.66411	No
SLV 15	-6183	-8193	-176	0.065	731.5	0.959	0.98461	4.66411	No
SLV 12	-4938	-6064	-152	0.065	605	0.951	0.99868	4.54747	No
SLV 11	-4938	-6064	-152	0.065	605	0.951	0.99868	4.54747	No
SLV 5	-6702	-8981	158	0.069	784.3	0.961	1.03824	4.54747	No
SLV 6	-6702	-8981	158	0.069	784.3	0.961	1.03824	4.54747	No
SLV 4	-4805	-5757	116	0.071	591.5	0.95	1.09314	4.66411	No
SLV 3	-4805	-5757	116	0.071	591.5	0.95	1.09314	4.66411	No

Tabella dei coefficienti di sicurezza minimi

Stato limite	Coeff.s.	Comb.	Verifica
PF_SLU	7.732	SLU 39	Si
V_SLU	5.384	SLU 81	Si
PF_SLV	4.999	SLV 7	Si
V_SLV	1.379	SLV 9	Si
PFFP_SLV	14.838	SLV 7	Si
R_SLV	0.202	SLV 1	No

Maschio 189

Verifiche condotte secondo D.M. 17-01-18 (N.T.C.)

Dati geometrici

X ini.	Y ini.	X fin.	Y fin.	Quota i.	Quota.s	l	Sp.	h netta	h ini.	h fin.	a	a.s.,sx	a.s.,dx
-13.753	-4.784	-13.753	-3.254	Z medio 959 cm	L6	1.529	0.28	1.86	1.86	1.86			

Caratteristiche del materiale

(Circolare 7 21-01-19 C8.5.I) Muratura in mattoni pieni e malta di calce LC2_Corti

fb	fk	fvk0	fmedio	τ0	fv0	μ	ϕ	fv,lim	E	G	FC
600000			345000	9000	20000	0.58	0.77	32500	320000000	128000000	1.2

Verifica a pressoflessione nel piano secondo D.M. 17-01-18 NTC §7.8.2.2.1 in combinazioni non sismiche, γM = 3

Comb.	Quota	N	M	σ0	Mu	c.s.	Verifica
SLU 19	9.59	-5254	-388.99	12271	3412.63	8.773	Si
SLU 19	11.45	-3903	117.74	9115	2650.74	22.514	Si
SLU 82	9.59	-7023	-455.52	16400	4288.9	9.415	Si
SLU 82	11.45	-5216	167.9	12181	3392.2	20.203	Si
SLU 81	9.59	-7016	-452.17	16383	4285.65	9.478	Si
SLU 81	11.45	-5203	179.6	12151	3385.28	18.849	Si
SLU 41	9.59	-5904	-414.94	13788	3750.56	9.039	Si
SLU 41	11.45	-4521	165.18	10557	3008.77	18.215	Si
SLU 20	9.59	-5499	-369.17	12841	3541.84	9.594	Si
SLU 20	11.45	-4160	129.75	9714	2801.47	21.592	Si
SLU 39	9.59	-5653	-431.41	13201	3622.01	8.396	Si

Comb.	Quota	N	M	σ0	Mu	c.s.	Verifica
SLU 39	11.45	-4251	164.86	9928	2854.64	17.315	Si
SLU 42	9.59	-5911	-418.29	13805	3754.17	8.975	Si
SLU 42	11.45	-4534	153.48	10587	3016.07	19.651	Si
SLU 18	9.59	-5247	-385.64	12254	3408.82	8.839	Si
SLU 18	11.45	-3890	129.43	9085	2643.08	20.42	Si
SLU 21	9.59	-5506	-372.52	12858	3545.57	9.518	Si
SLU 21	11.45	-4173	118.05	9744	2808.98	23.795	Si
SLU 40	9.59	-5660	-434.76	13218	3625.7	8.34	Si
SLU 40	11.45	-4264	153.17	9958	2862.1	18.686	Si

Verifica a pressoflessione nel piano secondo D.M. 17-01-18 NTC §7.8.2.2.1 in combinazioni sismiche, γM = 2

Comb.	Quota	N	M	σ0	Mu	c.s.	Verifica
SLV 10	9.59	-6382	-904.71	14904	4284.97	4.736	Si
SLV 10	11.45	-4444	762.48	10378	3109.54	4.078	Si
SLV 15	9.59	-5686	-818.4	13277	3875.13	4.735	Si
SLV 15	11.45	-4944	312.63	11546	3423.34	10.95	Si
SLV 14	9.59	-6268	-1109.03	14637	4218.51	3.804	Si
SLV 14	11.45	-5129	639.21	11978	3537.5	5.534	Si
SLV 4	9.59	-4073	734.18	9512	2872.06	3.912	Si
SLV 4	11.45	-2371	-423.8	5536	1730.61	4.084	Si
SLV 9	9.59	-6382	-904.71	14904	4284.97	4.736	Si
SLV 9	11.45	-4444	762.48	10378	3109.54	4.078	Si
SLV 16	9.59	-5686	-818.4	13277	3875.13	4.735	Si
SLV 16	11.45	-4944	312.63	11546	3423.34	10.95	Si
SLV 3	9.59	-4073	734.18	9512	2872.06	3.912	Si
SLV 3	11.45	-2371	-423.8	5536	1730.61	4.084	Si
SLV 13	9.59	-6268	-1109.03	14637	4218.51	3.804	Si
SLV 13	11.45	-5129	639.21	11978	3537.5	5.534	Si
SLV 7	9.59	-3958	529.85	9244	2797.86	5.28	Si
SLV 7	11.45	-3056	-547.06	7136	2200.08	4.022	Si
SLV 8	9.59	-3958	529.85	9244	2797.86	5.28	Si
SLV 8	11.45	-3056	-547.06	7136	2200.08	4.022	Si

Verifica a taglio nel piano secondo D.M. 17-01-18 (N.T.C.) §7.8.2.2.2 con rottura per scorrimento in combinazioni non sismiche, γM = 3

Comb.	Quota	N	V par	M	σ0	σN	I'	fvd	Vt scorr.	Vt fess.diag.	Vt,lim	c.s.	Verifica
SLU 40	9.59	-5660	-544	-434.76		13218	1.5293	7318	3134			5.76	Si
SLU 40	11.45	-4264	-226	153.17		9958	1.5293	6883	2948			13.04	Si
SLU 42	9.59	-5911	-504	-418.29		13805	1.5293	7396	3167			6.29	Si
SLU 42	11.45	-4534	-184	153.48		10587	1.5293	6967	2983			16.22	Si
SLU 18	9.59	-5247	-482	-385.64		12254	1.5293	7189	3079			6.39	Si
SLU 18	11.45	-3890	-191	129.43		9085	1.5293	6767	2898			15.2	Si
SLU 84	9.59	-7274	-535	-439.05		16987	1.5293	7821	3349			6.26	Si
SLU 84	11.45	-5485	-177	168.22		12810	1.5293	7264	3110			17.61	Si
SLU 41	9.59	-5904	-525	-414.94		13788	1.5293	7394	3166			6.03	Si
SLU 41	11.45	-4521	-211	165.18		10557	1.5293	6963	2982			14.14	Si
SLU 82	9.59	-7023	-576	-455.52		16400	1.5293	7742	3315			5.76	Si
SLU 82	11.45	-5216	-219	167.9		12181	1.5293	7180	3074			14.06	Si
SLU 60	9.59	-6610	-513	-406.4		15436	1.5293	7614	3260			6.35	Si
SLU 60	11.45	-4842	-183	144.17		11308	1.5293	7063	3025			16.5	Si
SLU 39	9.59	-5653	-566	-431.41		13201	1.5293	7316	3133			5.54	Si
SLU 39	11.45	-4251	-253	164.86		9928	1.5293	6879	2946			11.65	Si
SLU 83	9.59	-7267	-556	-435.7		16971	1.5293	7818	3348			6.02	Si
SLU 83	11.45	-5473	-204	179.92		12780	1.5293	7260	3109			15.27	Si
SLU 81	9.59	-7016	-597	-452.17		16383	1.5293	7740	3314			5.55	Si
SLU 81	11.45	-5203	-246	179.6		12151	1.5293	7176	3073			12.51	Si

Verifica a taglio nel piano secondo D.M. 17-01-18 (N.T.C.) §7.8.2.2.2 con rottura per scorrimento in combinazioni sismiche, γM = 2

Comb.	Quota	N	V par	M	σ0	σN	I'	fvd	Vt scorr.	Vt fess.diag.	Vt,lim	c.s.	Verifica
SLV 7	9.59	-3958	2876	529.85		9244	1.5293	10182	4360			1.52	Si
SLV 7	11.45	-3056	2774	-547.06		7136	1.5293	9760	4180			1.51	Si
SLV 9	9.59	-6382	-3436	-904.71		14904	1.5293	11314	4845			1.41	Si
SLV 9	11.45	-4444	-2960	762.48		10378	1.5293	10409	4457			1.51	Si
SLV 13	9.59	-6268	-3153	-1109.03		14637	1.5293	11261	4822			1.53	Si
SLV 13	11.45	-5129	-2858	639.21		11978	1.5293	10729	4594			1.61	Si
SLV 5	9.59	-5898	-2166	-438.93		13775	1.5293	11088	4748			2.19	Si
SLV 5	11.45	-3672	-1704	541.55		8575	1.5293	10048	4303			2.52	Si
SLV 3	9.59	-4073	2593	734.18		9512	1.5293	10236	4383			1.69	Si
SLV 3	11.45	-2371	2671	-423.8		5536	1.5293	9441	4043			1.51	Si
SLV 6	9.59	-5898	-2166	-438.93		13775	1.5293	11088	4748			2.19	Si
SLV 6	11.45	-3672	-1704	541.55		8575	1.5293	10048	4303			2.52	Si
SLV 8	9.59	-3958	2876	529.85		9244	1.5293	10182	4360			1.52	Si
SLV 8	11.45	-3056	2774	-547.06		7136	1.5293	9760	4180			1.51	Si
SLV 10	9.59	-6382	-3436	-904.71		14904	1.5293	11314	4845			1.41	Si
SLV 10	11.45	-4444	-2960	762.48		10378	1.5293	10409	4457			1.51	Si
SLV 4	9.59	-4073	2593	734.18		9512	1.5293	10236	4383			1.69	Si
SLV 4	11.45	-2371	2671	-423.8		5536	1.5293	9441	4043			1.51	Si
SLV 14	9.59	-6268	-3153	-1109.03		14637	1.5293	11261	4822			1.53	Si
SLV 14	11.45	-5129	-2858	639.21		11978	1.5293	10729	4594			1.61	Si

Verifica a pressoflessione fuori piano D.M. 17-01-18 (N.T.C.)

quota 10.52 Wa 0.05 denominatore 8 γM = 2

Comb.	fd	Sa	σ0	N	M	Mc	Coeff.s.	Verifica
SLV 4	143750	0.47	7878	-3374	54.67	441.84	8.08	Si
SLV 3	143750	0.47	7878	-3374	54.67	441.84	8.08	Si
SLV 7	143750	0.47	8587	-3677	54.67	478.63	8.76	Si
SLV 8	143750	0.47	8587	-3677	54.67	478.63	8.76	Si
SLV 2	143750	0.47	8723	-3735	54.67	485.6	8.88	Si
SLV 1	143750	0.47	8723	-3735	54.67	485.6	8.88	Si
SLV 11	143750	0.47	10040	-4299	54.67	552.42	10.11	Si
SLV 12	143750	0.47	10040	-4299	54.67	552.42	10.11	Si

Comb.	fd	Sa	σ0	N	M	Mc	Coeff.s.	Verifica
SLV 5	143750	0.47	11402	-4883	54.67	619.78	11.34	Si
SLV 6	143750	0.47	11402	-4883	54.67	619.78	11.34	Si

Verifica dei meccanismi locali di collasso con analisi cinematica lineare

forza di aggancio al piano = 0 quota mezzeria = 10.52 Wa = 0.05 Ta = 0.0206

Comb.	N top	N base	V orto	α0	M*	e*	a0*	aLim	Verifica
SLV 13	-5129	-6268	1	0.084	634.8	0.949	1.29251	5.27326	No
SLV 14	-5129	-6268	1	0.084	634.8	0.949	1.29251	5.27326	No
SLV 15	-4944	-5686	2	0.084	616.1	0.948	1.29592	5.27326	No
SLV 16	-4944	-5686	2	0.084	616.1	0.948	1.29592	5.27326	No
SLV 10	-4444	-6382	-1	0.086	565.3	0.944	1.31698	5.11122	No
SLV 9	-4444	-6382	-1	0.086	565.3	0.944	1.31698	5.11122	No
SLV 12	-3828	-4442	3	0.087	502.9	0.938	1.34185	5.11122	No
SLV 11	-3828	-4442	3	0.087	502.9	0.938	1.34185	5.11122	No
SLV 5	-3672	-5898	-2	0.087	487.2	0.936	1.35416	5.11122	No
SLV 6	-3672	-5898	-2	0.087	487.2	0.936	1.35416	5.11122	No

Tabella dei coefficienti di sicurezza minimi

Stato limite	Coeff.s.	Comb.	Verifica
PF_SLU	8.34	SLU 40	Si
V_SLU	5.538	SLU 39	Si
PF_SLV	3.804	SLV 13	Si
V_SLV	1.41	SLV 9	Si
PFFP_SLV	8.083	SLV 3	Si
R_SLV	0.245	SLV 13	No

Maschio 191

Verifiche condotte secondo D.M. 17-01-18 (N.T.C.)

Dati geometrici

X ini.	Y ini.	X fin.	Y fin.	Quota i.	Quota.s	l	Sp.	h netta	h ini.	h fin.	a	a.s.,sx	a.s.,dx
-13.753	-3.254	-13.753	-0.354	Z medio 874 cm	L6	2.901	0.28	2.705	1.86	3.55			

Caratteristiche del materiale

(Circolare 7 21-01-19 C8.5.I) Muratura in mattoni pieni e malta di calce LC2_Corti

fb	fk	fvk0	fmedio	τ0	fv0	μ	ϕ	fv,lim	E	G	FC
600000			345000	9000	20000	0.58	0.77	32500	320000000	128000000	1.2

Verifica a pressoflessione nel piano secondo D.M. 17-01-18 NTC §7.8.2.2.1 in combinazioni non sismiche, γM = 3

Comb.	Quota	N	M	σ0	Mu	c.s.	Verifica
SLU 39	9.59	-14832	2201	18262	16688.93	7.582	Si
SLU 39	11.45	-10162	695.01	12512	12474.88	17.949	Si
SLU 83	9.59	-18608	2539.98	22910	19396.86	7.637	Si
SLU 83	11.45	-12810	823.3	15772	14981.16	18.196	Si
SLU 77	9.59	-19116	2488.39	23536	19713.58	7.922	Si
SLU 77	11.45	-13290	804.89	16364	15403.23	19.137	Si
SLU 35	9.59	-16021	2230.18	19726	17608.91	7.896	Si
SLU 35	11.45	-11213	695.98	13806	13506.39	19.406	Si
SLU 40	9.59	-14760	2179.98	18173	16630.77	7.629	Si
SLU 40	11.45	-10119	685.97	12460	12431.71	18.123	Si
SLU 81	9.59	-17927	2459.21	22073	18954.89	7.708	Si
SLU 81	11.45	-12240	803.92	15070	14467.41	17.996	Si
SLU 41	9.59	-15513	2281.77	19100	17223.24	7.548	Si
SLU 41	11.45	-10732	714.39	13214	13040.55	18.254	Si
SLU 42	9.59	-15440	2260.75	19011	17167.24	7.594	Si
SLU 42	11.45	-10690	705.35	13161	12998.46	18.428	Si
SLU 82	9.59	-17854	2438.19	21983	18906.57	7.754	Si
SLU 82	11.45	-12197	794.88	15017	14428.16	18.151	Si
SLU 84	9.59	-18535	2518.96	22821	19350.7	7.682	Si
SLU 84	11.45	-12767	814.26	15719	14942.98	18.352	Si

Verifica a pressoflessione nel piano secondo D.M. 17-01-18 NTC §7.8.2.2.1 in combinazioni sismiche, γM = 2

Comb.	Quota	N	M	σ0	Mu	c.s.	Verifica
SLV 1	9.59	-15146	1078.76	18648	18614.07	17.255	Si
SLV 1	11.45	-9770	2509.46	12029	12774.33	5.09	Si
SLV 15	9.59	-10122	1831.17	12463	13182.89	7.199	Si
SLV 15	11.45	-7394	-1536.3	9104	9924.98	6.46	Si
SLV 3	9.59	-14330	1829.02	17644	17782.01	9.722	Si
SLV 3	11.45	-9547	2099.34	11755	12514.31	5.961	Si
SLV 2	9.59	-15146	1078.76	18648	18614.07	17.255	Si
SLV 2	11.45	-9770	2509.46	12029	12774.33	5.09	Si
SLV 7	9.59	-11905	2705.07	14658	15194.87	5.617	Si
SLV 7	11.45	-8534	348.4	10507	11312.55	32.47	Si
SLV 16	9.59	-10122	1831.17	12463	13182.89	7.199	Si
SLV 16	11.45	-7394	-1536.3	9104	9924.98	6.46	Si
SLV 8	9.59	-11905	2705.07	14658	15194.87	5.617	Si
SLV 8	11.45	-8534	348.4	10507	11312.55	32.47	Si
SLV 12	9.59	-10643	2705.72	13104	13780	5.093	Si
SLV 12	11.45	-7888	-742.29	9712	10530.85	14.187	Si
SLV 11	9.59	-10643	2705.72	13104	13780	5.093	Si
SLV 11	11.45	-7888	-742.29	9712	10530.85	14.187	Si
SLV 4	9.59	-14330	1829.02	17644	17782.01	9.722	Si
SLV 4	11.45	-9547	2099.34	11755	12514.31	5.961	Si

Verifica a taglio nel piano secondo D.M. 17-01-18 (N.T.C.) §7.8.2.2.2 con rottura per scorrimento in combinazioni non sismiche, γM = 3

Comb.	Quota	N	V par	M	σ0	σN	l'	fvd	Vt scorr.	Vt fess.diag.	Vt,lim	c.s.	Verifica
SLU 42	9.59	-15440	1276	2260.75		19011	2.9007	8090	6571			5.15	Si
SLU 42	11.45	-10690	901	705.35		13161	2.9007	7310	5937			6.59	Si
SLU 39	9.59	-14832	1286	2201		18262	2.9007	7991	6490			5.05	Si
SLU 39	11.45	-10162	888	695.01		12512	2.9007	7224	5867			6.61	Si
SLU 40	9.59	-14760	1273	2179.98		18173	2.9007	7979	6480			5.09	Si
SLU 40	11.45	-10119	876	685.97		12460	2.9007	7217	5861			6.69	Si
SLU 84	9.59	-18535	1341	2518.96		22821	2.9007	8598	6983			5.21	Si
SLU 84	11.45	-12767	947	814.26		15719	2.9007	7651	6214			6.56	Si
SLU 41	9.59	-15513	1290	2281.77		19100	2.9007	8102	6581			5.1	Si
SLU 41	11.45	-10732	913	714.39		13214	2.9007	7317	5943			6.51	Si
SLU 83	9.59	-18608	1354	2539.98		22910	2.9007	8610	6993			5.16	Si
SLU 83	11.45	-12810	959	823.3		15772	2.9007	7658	6220			6.49	Si
SLU 74	9.59	-18435	1228	2407.62		22698	2.9007	8582	6970			5.67	Si
SLU 74	11.45	-12720	916	785.5		15662	2.9007	7644	6208			6.78	Si
SLU 81	9.59	-17927	1350	2459.21		22073	2.9007	8499	6902			5.11	Si
SLU 81	11.45	-12240	935	803.92		15070	2.9007	7565	6144			6.57	Si
SLU 82	9.59	-17854	1337	2438.19		21983	2.9007	8487	6893			5.16	Si
SLU 82	11.45	-12197	922	794.88		15017	2.9007	7558	6138			6.66	Si
SLU 32	9.59	-15340	1164	2149.41		18888	2.9007	8074	6558			5.64	Si
SLU 32	11.45	-10643	869	676.6		13104	2.9007	7303	5931			6.82	Si

Verifica a taglio nel piano secondo D.M. 17-01-18 (N.T.C.) §7.8.2.2.2 con rottura per scorrimento in combinazioni sismiche, γM = 2

Comb.	Quota	N	V par	M	σ0	σN	l'	fvd	Vt scorr.	Vt fess.diag.	Vt,lim	c.s.	Verifica
SLV 12	9.59	-10643	8457	2705.72		13104	2.9007	10954	8897			1.05	Si
SLV 12	11.45	-7888	6169	-742.29		9712	2.9007	10276	8346			1.35	Si
SLV 9	9.59	-13363	-5171	204.86		16453	2.9007	11624	9441			1.83	Si
SLV 9	11.45	-8630	-4881	624.76		10626	2.9007	10458	8494			1.74	Si
SLV 5	9.59	-14625	-7067	204.22		18007	2.9007	11935	9693			1.37	Si
SLV 5	11.45	-9276	-5139	1715.46		11421	2.9007	10618	8623			1.68	Si
SLV 10	9.59	-13363	-5171	204.86		16453	2.9007	11624	9441			1.83	Si
SLV 10	11.45	-8630	-4881	624.76		10626	2.9007	10458	8494			1.74	Si
SLV 15	9.59	-10122	5899	1831.17		12463	2.9007	10826	8793			1.49	Si
SLV 15	11.45	-7394	2602	-1536.3		9104	2.9007	10154	8247			3.17	Si
SLV 8	9.59	-11905	6561	2705.07		14658	2.9007	11265	9149			1.39	Si
SLV 8	11.45	-8534	5911	348.4		10507	2.9007	10435	8475			1.43	Si
SLV 11	9.59	-10643	8457	2705.72		13104	2.9007	10954	8897			1.05	Si
SLV 11	11.45	-7888	6169	-742.29		9712	2.9007	10276	8346			1.35	Si
SLV 7	9.59	-11905	6561	2705.07		14658	2.9007	11265	9149			1.39	Si
SLV 7	11.45	-8534	5911	348.4		10507	2.9007	10435	8475			1.43	Si
SLV 16	9.59	-10122	5899	1831.17		12463	2.9007	10826	8793			1.49	Si
SLV 16	11.45	-7394	2602	-1536.3		9104	2.9007	10154	8247			3.17	Si
SLV 6	9.59	-14625	-7067	204.22		18007	2.9007	11935	9693			1.37	Si
SLV 6	11.45	-9276	-5139	1715.46		11421	2.9007	10618	8623			1.68	Si

Verifica a pressoflessione fuori piano D.M. 17-01-18 (N.T.C.)

quota 10.52 Wa 0.05 denominatore 8 γM = 2

Comb.	fd	Sa	σ0	N	M	Mc	Coeff.s.	Verifica
SLV 16	143750	0.47	10668	-8664	219.29	1107.12	5.05	Si
SLV 15	143750	0.47	10668	-8664	219.29	1107.12	5.05	Si
SLV 13	143750	0.47	11307	-9184	219.29	1166.74	5.32	Si
SLV 14	143750	0.47	11307	-9184	219.29	1166.74	5.32	Si
SLV 12	143750	0.47	11488	-9330	219.29	1183.42	5.4	Si
SLV 11	143750	0.47	11488	-9330	219.29	1183.42	5.4	Si
SLV 8	143750	0.47	12830	-10420	219.29	1305.65	5.95	Si
SLV 7	143750	0.47	12830	-10420	219.29	1305.65	5.95	Si
SLV 10	143750	0.47	13619	-11061	219.29	1375.96	6.27	Si
SLV 9	143750	0.47	13619	-11061	219.29	1375.96	6.27	Si

Verifica dei meccanismi locali di collasso con analisi cinematica lineare

forza di aggancio al piano = 0 quota mezzeria = 10.52 Wa = 0.05 Ta = 0.0436

Comb.	N top	N base	V orto	α0	M*	e*	a0*	aLim	Verifica
SLV 9	-8630	-13363	206	0.042	1192.4	0.93	0.65579	7.19179	No
SLV 10	-8630	-13363	206	0.042	1192.4	0.93	0.65579	7.19179	No
SLV 13	-7617	-10938	158	0.046	1090.3	0.924	0.72329	7.7326	No
SLV 14	-7617	-10938	158	0.046	1090.3	0.924	0.72329	7.7326	No
SLV 8	-8534	-11905	-185	0.044	1182.7	0.929	0.68622	7.19179	No
SLV 7	-8534	-11905	-185	0.044	1182.7	0.929	0.68622	7.19179	No
SLV 4	-9547	-14330	-136	0.049	1285	0.934	0.75971	7.7326	No
SLV 3	-9547	-14330	-136	0.049	1285	0.934	0.75971	7.7326	No
SLV 5	-9276	-14625	148	0.048	1257.6	0.932	0.74301	7.19179	No
SLV 6	-9276	-14625	148	0.048	1257.6	0.932	0.74301	7.19179	No

Tabella dei coefficienti di sicurezza minimi

Stato limite	Coeff.s.	Comb.	Verifica
PF_SLU	7.548	SLU 41	Si
V_SLU	5.047	SLU 39	Si
PF_SLV	5.09	SLV 1	Si
V_SLV	1.052	SLV 11	Si
PFFP_SLV	5.049	SLV 15	Si
R_SLV	0.091	SLV 9	No

Maschio 192

Verifiche condotte secondo D.M. 17-01-18 (N.T.C.)

Dati geometrici

X ini.	Y ini.	X fin.	Y fin.	Quota i.	Quota.s	l	Sp.	h netta	h ini.	h fin.	a	a.s.,sx	a.s.,dx
-13.753	-0.354	-13.753	1.046	L5	L6	1.4	0.28	3.55	3.55	3.55			

Caratteristiche del materiale

(Circolare 7 21-01-19 C8.5.I) Muratura in mattoni pieni e malta di calce LC2_Corti

fb	fk	fvk0	fmedio	τ0	fv0	μ	ϕ	fv,lim	E	G	FC
600000			345000	9000	20000	0.58	0.77	32500	320000000	128000000	1.2

Verifica a pressoflessione nel piano secondo D.M. 17-01-18 NTC §7.8.2.2.1 in combinazioni non sismiche, γM = 3

Comb.	Quota	N	M	σ0	Mu	c.s.	Verifica
SLU 27	7.9	-11295	-68.51	28814	5109.82	74.581	Si
SLU 27	11.45	-7048	224.2	17979	3844.53	17.148	Si
SLU 72	7.9	-13145	-84.72	33532	5413.61	63.902	Si
SLU 72	11.45	-8149	239.28	20788	4248.54	17.755	Si
SLU 69	7.9	-13462	-82.59	34342	5450.67	65.998	Si
SLU 69	11.45	-8414	257.43	21465	4337.96	16.851	Si
SLU 49	7.9	-12065	-67.59	30778	5254.51	77.738	Si
SLU 49	11.45	-7723	233.11	19702	4098.66	17.583	Si
SLU 7	7.9	-9898	-53.52	25250	4780.91	89.333	Si
SLU 7	11.45	-6356	199.88	16215	3563.81	17.83	Si
SLU 28	7.9	-11207	-67.44	28589	5091.63	75.497	Si
SLU 28	11.45	-7005	220.29	17869	3827.66	17.375	Si
SLU 48	7.9	-12153	-68.67	31003	5269.39	76.74	Si
SLU 48	11.45	-7766	237.01	19812	4114.17	17.358	Si
SLU 70	7.9	-13374	-81.52	34118	5440.84	66.746	Si
SLU 70	11.45	-8371	253.52	21355	4323.67	17.054	Si
SLU 6	7.9	-9986	-54.59	25474	4804.16	88.003	Si
SLU 6	11.45	-6400	203.79	16325	3581.9	17.577	Si
SLU 71	7.9	-13233	-85.79	33757	5424.32	63.228	Si
SLU 71	11.45	-8192	243.19	20898	4263.25	17.531	Si

Verifica a pressoflessione nel piano secondo D.M. 17-01-18 NTC §7.8.2.2.1 in combinazioni sismiche, γM = 2

Comb.	Quota	N	M	σ0	Mu	c.s.	Verifica
SLV 6	7.9	-8578	-691.4	21882	4929.06	7.129	Si
SLV 6	11.45	-7003	748.61	17865	4185.53	5.591	Si
SLV 13	7.9	-10508	-195.52	26807	5742.02	29.367	Si
SLV 13	11.45	-1958	-276.31	4995	1314.56	4.758	Si
SLV 11	7.9	-10212	591.38	26052	5624.51	9.511	Si
SLV 11	11.45	-4230	-488.41	10791	2699.64	5.527	Si
SLV 12	7.9	-10212	591.38	26052	5624.51	9.511	Si
SLV 12	11.45	-4230	-488.41	10791	2699.64	5.527	Si
SLV 14	7.9	-10508	-195.52	26807	5742.02	29.367	Si
SLV 14	11.45	-1958	-276.31	4995	1314.56	4.758	Si
SLV 15	7.9	-10774	181.57	27486	5845.53	32.195	Si
SLV 15	11.45	-1799	-549.66	4589	1211.98	2.205	Si
SLV 5	7.9	-8578	-691.4	21882	4929.06	7.129	Si
SLV 5	11.45	-7003	748.61	17865	4185.53	5.591	Si
SLV 1	7.9	-8016	-281.59	20448	4671.96	16.592	Si
SLV 1	11.45	-9435	809.87	24068	5303.35	6.548	Si
SLV 16	7.9	-10774	181.57	27486	5845.53	32.195	Si
SLV 16	11.45	-1799	-549.66	4589	1211.98	2.205	Si
SLV 2	7.9	-8016	-281.59	20448	4671.96	16.592	Si
SLV 2	11.45	-9435	809.87	24068	5303.35	6.548	Si

Verifica a taglio nel piano secondo D.M. 17-01-18 (N.T.C.) §7.8.2.2.2 con rottura per scorrimento in combinazioni non sismiche, γM = 3

Comb.	Quota	N	V par	M	σ0	σN	l'	fvd	Vt scorr.	Vt fess.diag.	Vt,lim	c.s.	Verifica
SLU 74	7.9	-13997	-929	-26.32		35707	1.4	10317	4044			4.35	Si
SLU 74	11.45	-8447	-1040	195.34		21549	1.4	8429	3304			3.18	Si
SLU 35	7.9	-12348	-902	-9.73		31501	1.4	9756	3824			4.24	Si
SLU 35	11.45	-7521	-1023	189.85		19187	1.4	8114	3181			3.11	Si
SLU 84	7.9	-14131	-954	-3.26		36049	1.4	10362	4062			4.26	Si
SLU 84	11.45	-8385	-1055	162.48		21390	1.4	8408	3296			3.12	Si
SLU 78	7.9	-14427	-955	-22.73		36805	1.4	10463	4101			4.3	Si
SLU 78	11.45	-8845	-1110	219.17		22563	1.4	8564	3357			3.03	Si
SLU 80	7.9	-14198	-950	-25.94		36219	1.4	10385	4071			4.29	Si
SLU 80	11.45	-8622	-1089	204.93		21996	1.4	8488	3327			3.05	Si
SLU 77	7.9	-14515	-976	-23.81		37029	1.4	10493	4113			4.21	Si
SLU 77	11.45	-8888	-1124	223.07		22673	1.4	8579	3363			2.99	Si
SLU 36	7.9	-12260	-880	-8.66		31276	1.4	9726	3812			4.33	Si
SLU 36	11.45	-7478	-1008	185.94		19077	1.4	8099	3175			3.15	Si
SLU 37	7.9	-12119	-897	-12.93		30915	1.4	9678	3794			4.23	Si
SLU 37	11.45	-7299	-1003	175.61		18619	1.4	8038	3151			3.14	Si
SLU 79	7.9	-14286	-971	-27.01		36444	1.4	10415	4083			4.2	Si
SLU 79	11.45	-8665	-1104	208.83		22106	1.4	8503	3333			3.02	Si
SLU 83	7.9	-14219	-976	-4.33		36273	1.4	10392	4074			4.17	Si
SLU 83	11.45	-8428	-1070	166.38		21500	1.4	8422	3302			3.09	Si

Verifica a taglio nel piano secondo D.M. 17-01-18 (N.T.C.) §7.8.2.2.2 con rottura per scorrimento in combinazioni sismiche, γM = 2

Comb.	Quota	N	V par	M	σ0	σN	l'	fvd	Vt scorr.	Vt fess.diag.	Vt,lim	c.s.	Verifica
SLV 10	7.9	-9325	-4356	-665.58		23789	1.4	13091	5132			1.18	Si
SLV 10	11.45	-4760	-3155	422.76		12144	1.4	10762	4219			1.34	Si
SLV 12	7.9	-10212	2832	591.38		26052	1.4	13544	5309			1.87	Si
SLV 12	11.45	-4230	2366	-488.41		10791	1.4	10492	4113			1.74	Si
SLV 9	7.9	-9325	-4356	-665.58		23789	1.4	13091	5132			1.18	Si
SLV 9	11.45	-4760	-3155	422.76		12144	1.4	10762	4219			1.34	Si
SLV 2	7.9	-8016	-1018	-281.59		20448	1.4	12423	4870			4.78	Si
SLV 2	11.45	-9435	-2222	809.87		24068	1.4	13147	5154			2.32	Si
SLV 7	7.9	-9465	3212	565.56		24144	1.4	13162	5160			1.61	Si
SLV 7	11.45	-6473	1905	-162.55		16513	1.4	11636	4561			2.39	Si

Comb.	Quota	N	V par	M	σ0	σN	l'	fvd	Vt scorr.	Vt fess.diag.	Vt,lim	c.s.	Verifica
SLV 5	7.9	-8578	-3977	-691.4		21882	1.4	12710	4982			1.25	Si
SLV 5	11.45	-7003	-3617	748.61		17865	1.4	11906	4667			1.29	Si
SLV 8	7.9	-9465	3212	565.56		24144	1.4	13162	5160			1.61	Si
SLV 8	11.45	-6473	1905	-162.55		16513	1.4	11636	4561			2.39	Si
SLV 11	7.9	-10212	2832	591.38		26052	1.4	13544	5309			1.87	Si
SLV 11	11.45	-4230	2366	-488.41		10791	1.4	10492	4113			1.74	Si
SLV 6	7.9	-8578	-3977	-691.4		21882	1.4	12710	4982			1.25	Si
SLV 6	11.45	-7003	-3617	748.61		17865	1.4	11906	4667			1.29	Si
SLV 1	7.9	-8016	-1018	-281.59		20448	1.4	12423	4870			4.78	Si
SLV 1	11.45	-9435	-2222	809.87		24068	1.4	13147	5154			2.32	Si

Verifica a pressoflessione fuori piano D.M. 17-01-18 (N.T.C.)

quota 9.675 Wa 0.05 denominatore 8 γM = 2

Comb.	fd	Sa	σ0	N	M	Mc	Coeff.s.	Verifica
SLV 14	143750	0.45	10413	-4082	175.27	522.77	2.98	Si
SLV 13	143750	0.45	10413	-4082	175.27	522.77	2.98	Si
SLV 15	143750	0.45	11125	-4361	175.27	554.97	3.17	Si
SLV 16	143750	0.45	11125	-4361	175.27	554.97	3.17	Si
SLV 9	143750	0.45	15264	-5983	175.27	733.03	4.18	Si
SLV 10	143750	0.45	15264	-5983	175.27	733.03	4.18	Si
SLV 11	143750	0.45	17638	-6914	175.27	828.25	4.73	Si
SLV 12	143750	0.45	17638	-6914	175.27	828.25	4.73	Si
SLV 5	143750	0.45	20133	-7892	175.27	922.86	5.27	Si
SLV 6	143750	0.45	20133	-7892	175.27	922.86	5.27	Si

Verifica dei meccanismi locali di collasso con analisi cinematica lineare

forza di aggancio al piano = 0 quota mezzeria = 9.675 Wa = 0.05 Ta = 0.0752

Comb.	N top	N base	V orto	α0	M*	e*	a0*	aLim	Verifica
SLV 16	-1799	-10774	-164	0.002	391.4	0.892	0.0307	12.98863	No
SLV 15	-1799	-10774	-164	0.002	391.4	0.892	0.0307	12.98863	No
SLV 12	-4230	-10212	-178	0.016	631	0.919	0.25154	11.49604	No
SLV 11	-4230	-10212	-178	0.016	631	0.919	0.25154	11.49604	No
SLV 6	-7003	-8578	192	0.022	910.6	0.94	0.34265	11.49604	No
SLV 5	-7003	-8578	192	0.022	910.6	0.94	0.34265	11.49604	No
SLV 2	-9435	-8016	178	0.027	1157.2	0.951	0.41933	12.98863	No
SLV 1	-9435	-8016	178	0.027	1157.2	0.951	0.41933	12.98863	No
SLV 10	-4760	-9325	116	0.028	684.2	0.924	0.44586	11.49604	No
SLV 9	-4760	-9325	116	0.028	684.2	0.924	0.44586	11.49604	No

Tabella dei coefficienti di sicurezza minimi

Stato limite	Coeff.s.	Comb.	Verifica
PF_SLU	16.851	SLU 69	Si
V_SLU	2.991	SLU 77	Si
PF_SLV	2.205	SLV 15	Si
V_SLV	1.178	SLV 9	Si
PFFP_SLV	2.983	SLV 13	Si
R_SLV	0.002	SLV 15	No

Maschio 193

Verifiche condotte secondo D.M. 17-01-18 (N.T.C.)

Dati geometrici

X ini.	Y ini.	X fin.	Y fin.	Quota i.	Quota.s	l	Sp.	h netta	h ini.	h fin.	a	a.s.,sx	a.s.,dx
-19.463	1.046	-24.643	1.046	L5	L6	5.18	0.28	3.55	3.55	3.55			

Caratteristiche del materiale

(Circolare 7 21-01-19 C8.5.I) Muratura in mattoni pieni e malta di calce LC2_Corti

fb	fk	fvk0	fmedio	τ0	fv0	μ	ϕ	fv,lim	E	G	FC
600000			345000	9000	20000	0.58	0.77	32500	320000000	128000000	1.2

Verifica a pressoflessione nel piano secondo D.M. 17-01-18 NTC §7.8.2.2.1 in combinazioni non sismiche, γM = 3

Comb.	Quota	N	M	σ0	Mu	c.s.	Verifica
SLU 36	7.9	-36179	-6935.52	24944	65012.52	9.374	Si
SLU 36	10	-33274	-11353.81	22940	61910.84	5.453	Si
SLU 77	7.9	-43645	-7758.9	30091	71285.18	9.188	Si
SLU 77	10	-38986	-12854.49	26878	67657.14	5.263	Si
SLU 83	7.9	-42196	-7105.93	29092	70258.67	9.887	Si
SLU 83	10	-37932	-11924.81	26152	66704.62	5.594	Si
SLU 79	7.9	-42716	-7550.62	29450	70637.74	9.355	Si
SLU 79	10	-37932	-12511.32	26152	66704.4	5.332	Si
SLU 38	7.9	-35250	-6727.25	24303	64060.97	9.523	Si
SLU 38	10	-32220	-11010.64	22214	60694.14	5.512	Si
SLU 69	7.9	-41591	-7242.28	28675	69803	9.638	Si
SLU 69	10	-35772	-11662.52	24663	64599.74	5.539	Si
SLU 80	7.9	-42588	-7650.43	29362	70545.78	9.221	Si
SLU 80	10	-37808	-12371.67	26067	66589.92	5.382	Si
SLU 35	7.9	-36307	-6835.71	25032	65140.36	9.529	Si
SLU 35	10	-33397	-11493.47	23025	62049.8	5.399	Si
SLU 37	7.9	-35378	-6627.44	24391	64194.01	9.686	Si
SLU 37	10	-32343	-11150.29	22299	60838.8	5.456	Si
SLU 78	7.9	-43517	-7858.71	30003	71198.42	9.06	Si
SLU 78	10	-38862	-12714.84	26794	67548.35	5.313	Si

Verifica a pressoflessione nel piano secondo D.M. 17-01-18 NTC §7.8.2.2.1 in combinazioni sismiche, γM = 2

Comb.	Quota	N	M	σ0	Mu	c.s.	Verifica
SLV 13	7.9	-25692	-16227.94	17713	56896.67	3.506	Si
SLV 13	10	-16482	5335.91	11364	38720.07	7.257	Si
SLV 15	7.9	-25529	-15313.33	17601	56596.39	3.696	Si
SLV 15	10	-19566	312.35	13490	45083.19	144.335	Si
SLV 7	7.9	-29860	588.68	20587	64309.84	109.244	Si
SLV 7	10	-31857	-18356.96	21964	67680.18	3.687	Si
SLV 8	7.9	-29860	588.68	20587	64309.84	109.244	Si
SLV 8	10	-31857	-18356.96	21964	67680.18	3.687	Si
SLV 2	7.9	-32649	6595.11	22510	68984.57	10.46	Si
SLV 2	10	-29856	-14369.46	20584	64301.39	4.475	Si
SLV 1	7.9	-32649	6595.11	22510	68984.57	10.46	Si
SLV 1	10	-29856	-14369.46	20584	64301.39	4.475	Si
SLV 14	7.9	-25692	-16227.94	17713	56896.67	3.506	Si
SLV 14	10	-16482	5335.91	11364	38720.07	7.257	Si
SLV 16	7.9	-25529	-15313.33	17601	56596.39	3.696	Si
SLV 16	10	-19566	312.35	13490	45083.19	144.335	Si
SLV 4	7.9	-32486	7509.71	22397	68717.44	9.15	Si
SLV 4	10	-32940	-19393.02	22710	69458.99	3.582	Si
SLV 3	7.9	-32486	7509.71	22397	68717.44	9.15	Si
SLV 3	10	-32940	-19393.02	22710	69458.99	3.582	Si

Verifica a taglio nel piano secondo D.M. 17-01-18 (N.T.C.) §7.8.2.2.2 con rottura per scorrimento in combinazioni non sismiche, γM = 3

Comb.	Quota	N	V par	M	σ0	σN	I'	fvd	Vt scorr.	Vt fess.diag.	Vt,lim	c.s.	Verifica
SLU 40	7.9	-33329	4597	-5616.45		22979	5.1801	8619	12502			2.72	Si
SLU 40	10	-30843	4633	-9326.78		21264	5.1801	8391	12170			2.63	Si
SLU 41	7.9	-34858	4903	-6182.74		24032	5.1801	8760	12706			2.59	Si
SLU 41	10	-32343	4901	-10563.78		22299	5.1801	8529	12370			2.52	Si
SLU 32	7.9	-34906	4554	-6169.61		24066	5.1801	8764	12712			2.79	Si
SLU 32	10	-32020	4552	-10396.11		22076	5.1801	8499	12327			2.71	Si
SLU 84	7.9	-42068	4889	-7205.74		29004	5.1801	9423	13667			2.8	Si
SLU 84	10	-37809	4925	-11785.16		26067	5.1801	9031	13099			2.66	Si
SLU 39	7.9	-33457	4748	-5516.64		23067	5.1801	8631	12519			2.64	Si
SLU 39	10	-30966	4746	-9466.43		21349	5.1801	8402	12187			2.57	Si
SLU 81	7.9	-40795	4886	-6439.83		28126	5.1801	9306	13497			2.76	Si
SLU 81	10	-36555	4884	-10827.45		25202	5.1801	8916	12932			2.65	Si
SLU 83	7.9	-42196	5041	-7105.93		29092	5.1801	9434	13684			2.71	Si
SLU 83	10	-37932	5038	-11924.81		26152	5.1801	9042	13116			2.6	Si
SLU 82	7.9	-40667	4735	-6539.64		28038	5.1801	9294	13480			2.85	Si
SLU 82	10	-36431	4770	-10687.8		25118	5.1801	8905	12916			2.71	Si
SLU 42	7.9	-34730	4752	-6282.55		23944	5.1801	8748	12689			2.67	Si
SLU 42	10	-32220	4787	-10424.13		22214	5.1801	8517	12354			2.58	Si
SLU 35	7.9	-36307	4709	-6835.71		25032	5.1801	8893	12899			2.74	Si
SLU 35	10	-33397	4706	-11493.47		23025	5.1801	8626	12511			2.66	Si

Verifica a taglio nel piano secondo D.M. 17-01-18 (N.T.C.) §7.8.2.2.2 con rottura per scorrimento in combinazioni sismiche, γM = 2

Comb.	Quota	N	V par	M	σ0	σN	I'	fvd	Vt scorr.	Vt fess.diag.	Vt,lim	c.s.	Verifica
SLV 15	7.9	-25529	-12027	-15313.33		17601	5.1801	11853	17193			1.43	Si
SLV 15	10	-19566	-10240	312.35		13490	5.1801	11031	16000			1.56	Si
SLV 1	7.9	-32649	17014	6595.11		22510	5.1801	12835	18617			1.09	Si
SLV 1	10	-29856	15225	-14369.46		20584	5.1801	12450	18058			1.19	Si
SLV 13	7.9	-25692	-12983	-16227.94		17713	5.1801	11876	17225			1.33	Si
SLV 13	10	-16482	-11319	5335.91		11364	5.1801	10606	15383			1.36	Si
SLV 14	7.9	-25692	-12983	-16227.94		17713	5.1801	11876	17225			1.33	Si
SLV 14	10	-16482	-11319	5335.91		11364	5.1801	10606	15383			1.36	Si
SLV 7	7.9	-29860	8587	588.68		20587	5.1801	12451	18059			2.1	Si
SLV 7	10	-31857	8272	-18356.96		21964	5.1801	12726	18458			2.23	Si
SLV 4	7.9	-32486	17970	7509.71		22397	5.1801	12813	18584			1.03	Si
SLV 4	10	-32940	16304	-19393.02		22710	5.1801	12875	18675			1.15	Si
SLV 16	7.9	-25529	-12027	-15313.33		17601	5.1801	11853	17193			1.43	Si
SLV 16	10	-19566	-10240	312.35		13490	5.1801	11031	16000			1.56	Si
SLV 3	7.9	-32486	17970	7509.71		22397	5.1801	12813	18584			1.03	Si
SLV 3	10	-32940	16304	-19393.02		22710	5.1801	12875	18675			1.15	Si
SLV 8	7.9	-29860	8587	588.68		20587	5.1801	12451	18059			2.1	Si
SLV 8	10	-31857	8272	-18356.96		21964	5.1801	12726	18458			2.23	Si
SLV 2	7.9	-32649	17014	6595.11		22510	5.1801	12835	18617			1.09	Si
SLV 2	10	-29856	15225	-14369.46		20584	5.1801	12450	18058			1.19	Si

Verifica a pressoflessione fuori piano D.M. 17-01-18 (N.T.C.)

quota 9.675 Wa 0.05 denominatore 8 γM = 2

Comb.	fd	Sa	σ0	N	M	Mc	Coeff.s.	Verifica
SLV 14	143750	0.45	12038	-17460	648.52	2203.59	3.4	Si
SLV 13	143750	0.45	12038	-17460	648.52	2203.59	3.4	Si
SLV 9	143750	0.45	12766	-18517	648.52	2321.51	3.58	Si
SLV 10	143750	0.45	12766	-18517	648.52	2321.51	3.58	Si
SLV 15	143750	0.45	14159	-20537	648.52	2542.01	3.92	Si
SLV 16	143750	0.45	14159	-20537	648.52	2542.01	3.92	Si
SLV 5	143750	0.45	15512	-22500	648.52	2750.05	4.24	Si
SLV 6	143750	0.45	15512	-22500	648.52	2750.05	4.24	Si
SLV 12	143750	0.45	19838	-28773	648.52	3374.27	5.2	Si
SLV 11	143750	0.45	19838	-28773	648.52	3374.27	5.2	Si

Verifica dei meccanismi locali di collasso con analisi cinematica lineare

forza di aggancio al piano = 0 quota mezzeria = 9.675 Wa = 0.05 Ta = 0.0752

Comb.	N top	N base	V orto	α0	M*	e*	a0*	aLim	Verifica
SLV 9	-17117	-28317	414	0.029	2481.6	0.923	0.45344	11.49604	No
SLV 10	-17117	-28317	414	0.029	2481.6	0.923	0.45344	11.49604	No
SLV 6	-18539	-30404	416	0.029	2624.6	0.926	0.4608	11.49604	No
SLV 5	-18539	-30404	416	0.029	2624.6	0.926	0.4608	11.49604	No

Comb.	N top	N base	V orto	α0	M*	e*	a0*	aLim	Verifica
SLV 12	-23592	-27773	-412	0.031	3134.6	0.936	0.4863	11.49604	No
SLV 11	-23592	-27773	-412	0.031	3134.6	0.936	0.4863	11.49604	No
SLV 7	-25014	-29860	-410	0.032	3278.4	0.938	0.49211	11.49604	No
SLV 8	-25014	-29860	-410	0.032	3278.4	0.938	0.49211	11.49604	No
SLV 2	-22463	-32649	129	0.041	3020.5	0.934	0.6445	12.98863	No
SLV 1	-22463	-32649	129	0.041	3020.5	0.934	0.6445	12.98863	No

Tabella dei coefficienti di sicurezza minimi

Stato limite	Coeff.s.	Comb.	Verifica
PF_SLU	5.263	SLU 77	Si
V_SLU	2.524	SLU 41	Si
PF_SLV	3.506	SLV 13	Si
V_SLV	1.034	SLV 3	Si
PFFP_SLV	3.398	SLV 13	Si
R_SLV	0.039	SLV 9	No

Maschio 194

Verifiche condotte secondo D.M. 17-01-18 (N.T.C.)

Dati geometrici

X ini.	Y ini.	X fin.	Y fin.	Quota i.	Quota.s	l	Sp.	h netta	h ini.	h fin.	a	a.s.,sx	a.s.,dx
-13.543	1.046	-18.663	1.046	L5	L6	5.12	0.28	3.55	3.55	3.55			

Caratteristiche del materiale

(Circolare 7 21-01-19 C8.5.I) Muratura in mattoni pieni e malta di calce LC2_Corti

fb	fk	fvk0	fmedio	τ0	fv0	μ	ϕ	fv,lim	E	G	FC
600000			345000	9000	20000	0.58	0.77	32500	320000000	128000000	1.2

Verifica a pressoflessione nel piano secondo D.M. 17-01-18 NTC §7.8.2.2.1 in combinazioni non sismiche, γM = 3

Comb.	Quota	N	M	σ0	Mu	c.s.	Verifica
SLU 34	7.9	-40773	450.26	28442	67931.08	150.871	Si
SLU 34	10	-38547	3340.35	26889	66103.5	19.789	Si
SLU 70	7.9	-49691	1468.69	34663	73074.63	49.755	Si
SLU 70	10	-45364	3654.18	31645	71014.77	19.434	Si
SLU 72	7.9	-48653	1361.64	33939	72655.25	53.359	Si
SLU 72	10	-44292	3558.5	30897	70377.21	19.777	Si
SLU 80	7.9	-51510	970.53	35932	73695.82	75.933	Si
SLU 80	10	-47873	3819.28	33395	72309.31	18.933	Si
SLU 78	7.9	-52548	1077.59	36656	73985.16	68.658	Si
SLU 78	10	-48946	3914.95	34143	72778.47	18.59	Si
SLU 84	7.9	-50472	739.69	35208	73359.32	99.176	Si
SLU 84	10	-46984	3605.42	32775	71881.94	19.937	Si
SLU 36	7.9	-44224	638.04	30849	70335	110.237	Si
SLU 36	10	-42010	3518.19	29305	68853.04	19.571	Si
SLU 76	7.9	-49097	889.81	34249	72840.71	81.861	Si
SLU 76	10	-45483	3737.11	31727	71082.02	19.021	Si
SLU 68	7.9	-46240	1280.92	32256	71497.85	55.818	Si
SLU 68	10	-41901	3476.33	29229	68774.53	19.784	Si
SLU 38	7.9	-43186	530.98	30125	69666.82	131.204	Si
SLU 38	10	-40938	3422.52	28557	68057.75	19.885	Si

Verifica a pressoflessione nel piano secondo D.M. 17-01-18 NTC §7.8.2.2.1 in combinazioni sismiche, γM = 2

Comb.	Quota	N	M	σ0	Mu	c.s.	Verifica
SLV 1	7.9	-33821	10197.28	23592	69861.19	6.851	Si
SLV 1	10	-30934	-16248.54	21579	65203.4	4.013	Si
SLV 15	7.9	-34350	-8348.15	23961	70687.8	8.467	Si
SLV 15	10	-29801	20139.7	20788	63307.81	3.143	Si
SLV 2	7.9	-33821	10197.28	23592	69861.19	6.851	Si
SLV 2	10	-30934	-16248.54	21579	65203.4	4.013	Si
SLV 16	7.9	-34350	-8348.15	23961	70687.8	8.467	Si
SLV 16	10	-29801	20139.7	20788	63307.81	3.143	Si
SLV 14	7.9	-29668	-14596.39	20696	63083.47	4.322	Si
SLV 14	10	-30454	24711.19	21244	64404.83	2.606	Si
SLV 13	7.9	-29668	-14596.39	20696	63083.47	4.322	Si
SLV 13	10	-30454	24711.19	21244	64404.83	2.606	Si
SLV 3	7.9	-38502	16445.52	26858	76897.24	4.676	Si
SLV 3	10	-30281	-20820.02	21123	64115.55	3.08	Si
SLV 9	7.9	-25660	-13208.21	17899	56063.68	4.245	Si
SLV 9	10	-31384	15708.68	21893	65945.45	4.198	Si
SLV 10	7.9	-25660	-13208.21	17899	56063.68	4.245	Si
SLV 10	10	-31384	15708.68	21893	65945.45	4.198	Si
SLV 4	7.9	-38502	16445.52	26858	76897.24	4.676	Si
SLV 4	10	-30281	-20820.02	21123	64115.55	3.08	Si

Verifica a taglio nel piano secondo D.M. 17-01-18 (N.T.C.) §7.8.2.2.2 con rottura per scorrimento in combinazioni non sismiche, γM = 3

Comb.	Quota	N	V par	M	σ0	σN	l'	fvd	Vt scorr.	Vt fess.diag.	Vt,lim	c.s.	Verifica
SLU 39	7.9	-40111	-1587	263.16		27980	5.1198	9286	13312			8.39	Si
SLU 39	10	-37573	-1560	2517.88		26210	5.1198	9050	12974			8.32	Si
SLU 42	7.9	-42148	-1548	300.14		29401	5.1198	9476	13584			8.78	Si
SLU 42	10	-40048	-1525	3208.66		27937	5.1198	9280	13304			8.72	Si
SLU 32	7.9	-42187	-1596	601.05		29428	5.1198	9479	13589			8.52	Si
SLU 32	10	-39535	-1573	2827.41		27579	5.1198	9233	13235			8.41	Si
SLU 79	7.9	-51736	-1783	996.78		36089	5.1198	10367	14862			8.34	Si
SLU 79	10	-47823	-1759	3454.11		33360	5.1198	10004	14340			8.15	Si
SLU 38	7.9	-43186	-1574	530.98		30125	5.1198	9572	13722			8.72	Si
SLU 38	10	-40938	-1557	3422.52		28557	5.1198	9363	13422			8.62	Si

Comb.	Quota	N	V par	M	σ0	σN	l'	fvd	Vt scorr.	Vt fess.diag.	Vt,lim	c.s.	Verifica
SLU 37	7.9	-43411	-1792	557.22		30283	5.1198	9593	13752			7.67	Si
SLU 37	10	-40887	-1770	3057.35		28522	5.1198	9358	13416			7.58	Si
SLU 35	7.9	-44449	-1774	664.28		31007	5.1198	9690	13891			7.83	Si
SLU 35	10	-41960	-1752	3153.02		29270	5.1198	9458	13559			7.74	Si
SLU 83	7.9	-50698	-1756	765.93		35366	5.1198	10271	14724			8.38	Si
SLU 83	10	-46933	-1728	3240.26		32739	5.1198	9921	14222			8.23	Si
SLU 77	7.9	-52774	-1765	1103.83		36814	5.1198	10464	15001			8.5	Si
SLU 77	10	-48895	-1742	3549.78		34108	5.1198	10103	14483			8.32	Si
SLU 41	7.9	-42374	-1765	326.38		29559	5.1198	9497	13614			7.71	Si
SLU 41	10	-39998	-1738	2843.5		27901	5.1198	9276	13297			7.65	Si

Verifica a taglio nel piano secondo D.M. 17-01-18 (N.T.C.) §7.8.2.2.2 con rottura per scorrimento in combinazioni sismiche, γM = 2

Comb.	Quota	N	V par	M	σ0	σN	l'	fvd	Vt scorr.	Vt fess.diag.	Vt,lim	c.s.	Verifica
SLV 3	7.9	-38502	20461	16445.52		26858	5.1198	13705	19647			0.96	No, Vu<V
SLV 3	10	-30281	18802	-20820.02		21123	5.1198	12558	18002			0.96	No, Vu<V
SLV 9	7.9	-25660	-13112	-13208.21		17899	5.1198	11913	17078			1.3	Si
SLV 9	10	-31384	-12654	15708.68		21893	5.1198	12712	18223			1.44	Si
SLV 4	7.9	-38502	20461	16445.52		26858	5.1198	13705	19647			0.96	No, Vu<V
SLV 4	10	-30281	18802	-20820.02		21123	5.1198	12558	18002			0.96	No, Vu<V
SLV 13	7.9	-29668	-22084	-14596.39		20696	5.1198	12472	17880			0.81	No, Vu<V
SLV 13	10	-30454	-20401	24711.19		21244	5.1198	12582	18037			0.88	No, Vu<V
SLV 15	7.9	-34350	-18182	-8348.15		23961	5.1198	13126	18816			1.03	Si
SLV 15	10	-29801	-16463	20139.7		20788	5.1198	12491	17906			1.09	Si
SLV 14	7.9	-29668	-22084	-14596.39		20696	5.1198	12472	17880			0.81	No, Vu<V
SLV 14	10	-30454	-20401	24711.19		21244	5.1198	12582	18037			0.88	No, Vu<V
SLV 2	7.9	-33821	16559	10197.28		23592	5.1198	13052	18710			1.13	Si
SLV 2	10	-30934	14863	-16248.54		21579	5.1198	12649	18133			1.22	Si
SLV 1	7.9	-33821	16559	10197.28		23592	5.1198	13052	18710			1.13	Si
SLV 1	10	-30934	14863	-16248.54		21579	5.1198	12649	18133			1.22	Si
SLV 10	7.9	-25660	-13112	-13208.21		17899	5.1198	11913	17078			1.3	Si
SLV 10	10	-31384	-12654	15708.68		21893	5.1198	12712	18223			1.44	Si
SLV 16	7.9	-34350	-18182	-8348.15		23961	5.1198	13126	18816			1.03	Si
SLV 16	10	-29801	-16463	20139.7		20788	5.1198	12491	17906			1.09	Si

Verifica a pressoflessione fuori piano D.M. 17-01-18 (N.T.C.)

quota 9.675 Wa 0.05 denominatore 8 γM = 2

Comb.	fd	Sa	σ0	N	M	Mc	Coeff.s.	Verifica
SLV 11	143750	0.45	20865	-29911	640.96	3472.44	5.42	Si
SLV 12	143750	0.45	20865	-29911	640.96	3472.44	5.42	Si
SLV 8	143750	0.45	20959	-30046	640.96	3484.89	5.44	Si
SLV 7	143750	0.45	20959	-30046	640.96	3484.89	5.44	Si
SLV 15	143750	0.45	21471	-30780	640.96	3551.98	5.54	Si
SLV 16	143750	0.45	21471	-30780	640.96	3551.98	5.54	Si
SLV 4	143750	0.45	21786	-31231	640.96	3592.75	5.61	Si
SLV 3	143750	0.45	21786	-31231	640.96	3592.75	5.61	Si
SLV 13	143750	0.45	22085	-31660	640.96	3631.3	5.67	Si
SLV 14	143750	0.45	22085	-31660	640.96	3631.3	5.67	Si

Verifica dei meccanismi locali di collasso con analisi cinematica lineare

forza di aggancio al piano = 0 quota mezzeria = 9.675 Wa = 0.05 Ta = 0.0752

Comb.	N top	N base	V orto	α0	M*	e*	a0*	aLim	Verifica
SLV 7	-24935	-42511	-1020	0.011	3261.7	0.938	0.17053	11.49604	No
SLV 8	-24935	-42511	-1020	0.011	3261.7	0.938	0.17053	11.49604	No
SLV 9	-27320	-25660	1019	0.013	3503.3	0.942	0.20285	11.49604	No
SLV 10	-27320	-25660	1019	0.013	3503.3	0.942	0.20285	11.49604	No
SLV 11	-23351	-41265	-864	0.015	3101.5	0.936	0.23268	11.49604	No
SLV 12	-23351	-41265	-864	0.015	3101.5	0.936	0.23268	11.49604	No
SLV 5	-28904	-26906	863	0.019	3663.9	0.944	0.2932	11.49604	No
SLV 6	-28904	-26906	863	0.019	3663.9	0.944	0.2932	11.49604	No
SLV 13	-24084	-29668	542	0.027	3175.6	0.937	0.41601	12.98863	No
SLV 14	-24084	-29668	542	0.027	3175.6	0.937	0.41601	12.98863	No

Tabella dei coefficienti di sicurezza minimi

Stato limite	Coeff.s.	Comb.	Verifica
PF_SLU	18.59	SLU 78	Si
V_SLU	7.581	SLU 37	Si
PF_SLV	2.606	SLV 13	Si
V_SLV	0.81	SLV 13	No
PFFP_SLV	5.418	SLV 11	Si
R_SLV	0.015	SLV 7	No

Maschio 195

Verifiche condotte secondo D.M. 17-01-18 (N.T.C.)

Dati geometrici

X ini.	Y ini.	X fin.	Y fin.	Quota i.	Quota.s	l	Sp.	h netta	h ini.	h fin.	a	a.s.,sx	a.s.,dx
-12.283	1.046	-12.543	1.046	L5	L6	0.261	0.28	3.55	3.55	3.55			

Caratteristiche del materiale

(Circolare 7 21-01-19 C8.5.I) Muratura in mattoni pieni e malta di calce LC2_Corti

fb	fk	fvk0	fmedio	τ0	fv0	μ	ϕ	fv,lim	E	G	FC
600000			345000	9000	20000	0.58	0.77	32500	320000000	128000000	1.2

Verifica a pressoflessione nel piano secondo D.M. 17-01-18 NTC §7.8.2.2.1 in combinazioni non sismiche, γM = 3

Comb.	Quota	N	M	σ0	Mu	c.s.	Verifica
SLU 70	7.9	-3453	-32.44	47339	188.41	5.807	Si
SLU 70	10.4	-1753	-83.23	24037	161.01	1.935	Si
SLU 74	7.9	-3589	-31.41	49207	185.13	5.894	Si
SLU 74	10.4	-1841	-86.43	25241	165.53	1.915	Si
SLU 80	7.9	-3644	-34.46	49955	183.58	5.327	Si
SLU 80	10.4	-1870	-88.55	25638	166.94	1.885	Si
SLU 75	7.9	-3567	-31.49	48898	185.73	5.897	Si
SLU 75	10.4	-1831	-86.41	25103	165.03	1.91	Si
SLU 78	7.9	-3710	-34.58	50857	181.55	5.249	Si
SLU 78	10.4	-1915	-90.99	26248	169.05	1.858	Si
SLU 83	7.9	-3634	-32.2	49813	183.89	5.71	Si
SLU 83	10.4	-1866	-87.32	25579	166.74	1.909	Si
SLU 77	7.9	-3732	-34.5	51165	180.81	5.241	Si
SLU 77	10.4	-1925	-91.01	26386	169.51	1.863	Si
SLU 79	7.9	-3667	-34.38	50264	182.91	5.321	Si
SLU 79	10.4	-1880	-88.57	25776	167.43	1.89	Si
SLU 84	7.9	-3611	-32.29	49504	184.53	5.715	Si
SLU 84	10.4	-1856	-87.3	25441	166.25	1.904	Si
SLU 76	7.9	-3486	-31.43	47791	187.69	5.973	Si
SLU 76	10.4	-1780	-83.95	24402	162.41	1.935	Si

Verifica a pressoflessione nel piano secondo D.M. 17-01-18 NTC §7.8.2.2.1 in combinazioni sismiche, γM = 2

Comb.	Quota	N	M	σ0	Mu	c.s.	Verifica
SLV 1	7.9	-2064	244.46	28301	206.64	0.845	No, M>Mu
SLV 1	10.4	-2642	-167.87	36222	242.16	1.443	Si
SLV 14	7.9	-2542	-290.78	34846	236.69	0.814	No, M>Mu
SLV 14	10.4	417	76.44	0	0	0	No, Trazione
SLV 4	7.9	-2273	250.91	31164	220.6	0.879	No, M>Mu
SLV 4	10.4	-2813	-186.69	38562	250.79	1.343	Si
SLV 13	7.9	-2542	-290.78	34846	236.69	0.814	No, M>Mu
SLV 13	10.4	417	76.44	0	0	0	No, Trazione
SLV 15	7.9	-2751	-284.33	37710	247.74	0.871	No, M>Mu
SLV 15	10.4	246	57.62	0	0	0	No, Trazione
SLV 3	7.9	-2273	250.91	31164	220.6	0.879	No, M>Mu
SLV 3	10.4	-2813	-186.69	38562	250.79	1.343	Si
SLV 7	7.9	-2684	71.1	36796	244.35	3.437	Si
SLV 7	10.4	-1942	-123.13	26616	197.82	1.607	Si
SLV 8	7.9	-2684	71.1	36796	244.35	3.437	Si
SLV 8	10.4	-1942	-123.13	26616	197.82	1.607	Si
SLV 16	7.9	-2751	-284.33	37710	247.74	0.871	No, M>Mu
SLV 16	10.4	246	57.62	0	0	0	No, Trazione
SLV 2	7.9	-2064	244.46	28301	206.64	0.845	No, M>Mu
SLV 2	10.4	-2642	-167.87	36222	242.16	1.443	Si

Verifica a taglio nel piano secondo D.M. 17-01-18 (N.T.C.) §7.8.2.2.2 con rottura per scorrimento in combinazioni non sismiche, γM = 3

Comb.	Quota	N	V par	M	σ0	σN	I'	fvd	Vt scorr.	Vt fess.diag.	Vt,lim	c.s.	Verifica
SLU 60	7.9	-3177	-31	-25.85		43556	0.2605	10833	790			25.19	Si
SLU 60	10.4	-1592	-117	-72.7		22406	0.2538	8543	607			5.21	Si
SLU 44	7.9	-2773	-28	-22.93		38016	0.2605	10624	775			28.11	Si
SLU 44	10.4	-1345	-107	-61.57		18954	0.2535	8083	574			5.35	Si
SLU 1	7.9	-2245	-22	-18.39		30772	0.2605	9659	705			31.73	Si
SLU 1	10.4	-1098	-94	-50.04		15434	0.254	7613	542			5.78	Si
SLU 61	7.9	-3155	-31	-25.93		43247	0.2605	10833	790			25.16	Si
SLU 61	10.4	-1582	-104	-72.67		22337	0.253	8534	605			5.79	Si
SLU 45	7.9	-3019	-31	-26		41390	0.2605	10833	790			25.39	Si
SLU 45	10.4	-1490	-111	-68.63		21066	0.2526	8364	592			5.33	Si
SLU 43	7.9	-2811	-28	-22.79		38530	0.2605	10693	780			28.35	Si
SLU 43	10.4	-1362	-127	-61.61		19070	0.2551	8098	578			4.54	Si
SLU 64	7.9	-3124	-31	-26.05		42828	0.2605	10833	790			25.12	Si
SLU 64	10.4	-1552	-111	-71.65		21971	0.2523	8485	599			5.39	Si
SLU 62	7.9	-3320	-35	-28.94		45515	0.2605	10833	790			22.8	Si
SLU 62	10.4	-1676	-107	-77.28		23709	0.2525	8717	616			5.78	Si
SLU 53	7.9	-3276	-34	-28.14		44908	0.2605	10833	790			23.36	Si
SLU 53	10.4	-1651	-103	-76.39		23402	0.252	8676	612			5.92	Si
SLU 50	7.9	-3096	-34	-28.97		42448	0.2605	10833	790			23.18	Si
SLU 50	10.4	-1529	-108	-70.77		21676	0.2519	8446	596			5.53	Si

Verifica a taglio nel piano secondo D.M. 17-01-18 (N.T.C.) §7.8.2.2.2 con rottura per scorrimento in combinazioni sismiche, γM = 2

Comb.	Quota	N	V par	M	σ0	σN	I'	fvd	Vt scorr.	Vt fess.diag.	Vt,lim	c.s.	Verifica
SLV 14	7.9	-2542	-278	-290.78		190666	0.0476	16250	217			0.78	No, Vu<V
SLV 14	10.4	417	-1772	76.44		0	0	8333	0			0	No, Vu<V
SLV 4	7.9	-2273	230	250.91		136036	0.0597	16250	272			1.18	Si
SLV 4	10.4	-2813	1598	-186.69		52410	0.1917	16250	872			0.55	No, Vu<V
SLV 13	7.9	-2542	-278	-290.78		190666	0.0476	16250	217			0.78	No, Vu<V
SLV 13	10.4	417	-1772	76.44		0	0	8333	0			0	No, Vu<V
SLV 2	7.9	-2064	222	244.46		207355	0.0356	16250	162			0.73	No, Vu<V
SLV 2	10.4	-2642	1417	-167.87		47139	0.2002	16250	911			0.64	No, Vu<V
SLV 10	7.9	-2131	-112	-110.97		32447	0.2346	14823	974			8.71	Si
SLV 10	10.4	-455	-867	12.88		6235	0.2605	9580	699			0.81	No, Vu<V
SLV 15	7.9	-2751	-271	-284.33		121726	0.0807	16250	367			1.36	Si
SLV 15	10.4	246	-1591	57.62		0	0	8333	0			0	No, Vu<V
SLV 9	7.9	-2131	-112	-110.97		32447	0.2346	14823	974			8.71	Si
SLV 9	10.4	-455	-867	12.88		6235	0.2605	9580	699			0.81	No, Vu<V
SLV 16	7.9	-2751	-271	-284.33		121726	0.0807	16250	367			1.36	Si
SLV 16	10.4	246	-1591	57.62		0	0	8333	0			0	No, Vu<V
SLV 3	7.9	-2273	230	250.91		136036	0.0597	16250	272			1.18	Si
SLV 3	10.4	-2813	1598	-186.69		52410	0.1917	16250	872			0.55	No, Vu<V
SLV 1	7.9	-2064	222	244.46		207355	0.0356	16250	162			0.73	No, Vu<V
SLV 1	10.4	-2642	1417	-167.87		47139	0.2002	16250	911			0.64	No, Vu<V

Verifica a pressoflessione fuori piano D.M. 17-01-18 (N.T.C.)

quota 9.675 Wa 0.05 denominatore 8 γM = 2

Comb.	fd	Sa	σ0	N	M	Mc	Coeff.s.	Verifica
SLV 5	143750	0.45	24391	-1779	32.62	199.37	6.11	Si
SLV 6	143750	0.45	24391	-1779	32.62	199.37	6.11	Si
SLV 1	143750	0.45	25231	-1841	32.62	204.47	6.27	Si
SLV 2	143750	0.45	25231	-1841	32.62	204.47	6.27	Si
SLV 9	143750	0.45	26351	-1922	32.62	211.07	6.47	Si
SLV 10	143750	0.45	26351	-1922	32.62	211.07	6.47	Si
SLV 3	143750	0.45	27911	-2036	32.62	219.93	6.74	Si
SLV 4	143750	0.45	27911	-2036	32.62	219.93	6.74	Si
SLV 13	143750	0.45	31763	-2317	32.62	240.06	7.36	Si
SLV 14	143750	0.45	31763	-2317	32.62	240.06	7.36	Si

Verifica dei meccanismi locali di collasso con analisi cinematica lineare

forza di aggancio al piano = 0 quota mezzeria = 9.675 Wa = 0.05 Ta = 0.0752

Comb.	N top	N base	V orto	α0	M*	e*	a0*	aLim	Verifica
SLV 12	-614	-2827	-124	0	100.1	0.909	0	11.49604	No
SLV 10	-1066	-2131	131	0	145.5	0.931	0	11.49604	No
SLV 9	-1066	-2131	131	0	145.5	0.931	0	11.49604	No
SLV 8	-771	-2684	-128	0	115.7	0.918	0	11.49604	No
SLV 6	-1223	-1988	127	0	161.3	0.937	0	11.49604	No
SLV 5	-1223	-1988	127	0	161.3	0.937	0	11.49604	No
SLV 7	-771	-2684	-128	0	115.7	0.918	0	11.49604	No
SLV 11	-614	-2827	-124	0	100.1	0.909	0	11.49604	No
SLV 14	-725	-2542	46	0.001	111.2	0.916	0.01462	12.98863	No
SLV 13	-725	-2542	46	0.001	111.2	0.916	0.01462	12.98863	No

Tabella dei coefficienti di sicurezza minimi

Stato limite	Coeff.s.	Comb.	Verifica
PF_SLU	1.858	SLU 78	Si
V_SLU	4.54	SLU 43	Si
PF_SLV	0	SLV 16	No
V_SLV	0	SLV 13	No
PFFP_SLV	6.113	SLV 5	Si
R_SLV	0	SLV 5	No

Maschio 196

Verifiche condotte secondo D.M. 17-01-18 (N.T.C.)

Dati geometrici

X ini.	Y ini.	X fin.	Y fin.	Quota i.	Quota.s	l	Sp.	h netta	h ini.	h fin.	a	a.s.,sx	a.s.,dx
-4.968	1.046	-11.163	1.046	L5	L6	6.195	0.28	3.55	3.55	3.55			

Caratteristiche del materiale

(Circolare 7 21-01-19 C8.5.I) Muratura in mattoni pieni e malta di calce LC2_Corti

fb	fk	fvk0	fmedio	τ0	fv0	μ	ϕ	fv,lim	E	G	FC
600000			345000	9000	20000	0.58	0.77	32500	320000000	128000000	1.2

Verifica a pressoflessione nel piano secondo D.M. 17-01-18 NTC §7.8.2.2.1 in combinazioni non sismiche, γM = 3

Comb.	Quota	N	M	σ0	Mu	c.s.	Verifica
SLU 48	7.9	-56522	-615.6	32585	105042.72	170.634	Si
SLU 48	10.4	-47919	5747.31	27625	98091.22	17.067	Si
SLU 79	7.9	-63532	946.04	36626	108307.06	114.484	Si
SLU 79	10.4	-56490	6185.18	32567	105022.93	16.98	Si
SLU 58	7.9	-58806	335.56	33902	106342.86	316.914	Si
SLU 58	10.4	-51172	5873.95	29501	101101.61	17.212	Si
SLU 71	7.9	-59937	80.46	34554	106901.89	1000	Si
SLU 71	10.4	-51893	6130.66	29916	101705.41	16.59	Si
SLU 69	7.9	-61248	-5.12	35310	107480.13	1000	Si
SLU 69	10.4	-53237	6058.54	30691	102771.18	16.963	Si
SLU 50	7.9	-55211	-530.03	31829	104192.74	196.58	Si
SLU 50	10.4	-46574	5819.43	26850	96712.02	16.619	Si
SLU 72	7.9	-59706	-70.81	34421	106792.38	1000	Si
SLU 72	10.4	-51834	5882.84	29882	101657.12	17.28	Si
SLU 56	7.9	-60118	249.98	34658	106986.11	427.973	Si
SLU 56	10.4	-52516	5801.83	30276	102209.85	17.617	Si
SLU 77	7.9	-64844	860.47	37382	108678.57	126.302	Si
SLU 77	10.4	-57835	6113.06	33342	105817.74	17.31	Si
SLU 51	7.9	-54980	-681.29	31696	104035.44	152.703	Si
SLU 51	10.4	-46516	5571.61	26816	96650.07	17.347	Si

Verifica a pressoflessione nel piano secondo D.M. 17-01-18 NTC §7.8.2.2.1 in combinazioni sismiche, γM = 2

Comb.	Quota	N	M	σ0	Mu	c.s.	Verifica
SLV 1	7.9	-39569	16806.78	22812	99683.7	5.931	Si
SLV 1	10.4	-31251	-10859.68	18016	82526.57	7.599	Si
SLV 13	7.9	-42554	-17538.82	24532	105346.5	6.006	Si
SLV 13	10.4	-40230	20911.03	23193	100959.5	4.828	Si
SLV 14	7.9	-42554	-17538.82	24532	105346.5	6.006	Si
SLV 14	10.4	-40230	20911.03	23193	100959.5	4.828	Si
SLV 10	7.9	-38555	-7143.69	22227	97699.88	13.676	Si
SLV 10	10.4	-36318	12285.59	20937	93218.39	7.588	Si
SLV 4	7.9	-42102	18200.35	24272	104505.03	5.742	Si
SLV 4	10.4	-31910	-12997.66	18396	83960.44	6.46	Si
SLV 9	7.9	-38555	-7143.69	22227	97699.88	13.676	Si
SLV 9	10.4	-36318	12285.59	20937	93218.39	7.588	Si

Comb.	Quota	N	M	σ0	Mu	c.s.	Verifica
SLV 15	7.9	-45086	-16145.26	25992	109946.91	6.81	Si
SLV 15	10.4	-40889	18773.05	23573	102220.3	5.445	Si
SLV 3	7.9	-42102	18200.35	24272	104505.03	5.742	Si
SLV 3	10.4	-31910	-12997.66	18396	83960.44	6.46	Si
SLV 16	7.9	-45086	-16145.26	25992	109946.91	6.81	Si
SLV 16	10.4	-40889	18773.05	23573	102220.3	5.445	Si
SLV 2	7.9	-39569	16806.78	22812	99683.7	5.931	Si
SLV 2	10.4	-31251	-10859.68	18016	82526.57	7.599	Si

Verifica a taglio nel piano secondo D.M. 17-01-18 (N.T.C.) §7.8.2.2.2 con rottura per scorrimento in combinazioni non sismiche, γM = 3

Comb.	Quota	N	V par	M	σ0	σN	l'	fvd	Vt scorr.	Vt fess.diag.	Vt,lim	c.s.	Verifica
SLU 59	7.9	-58575	-2006	184.29		33769	6.195	10058	17447			8.7	Si
SLU 59	10.4	-51114	-1672	5626.13		29467	6.195	9485	16452			9.84	Si
SLU 48	7.9	-56522	-2042	-615.6		32585	6.195	9900	17173			8.41	Si
SLU 48	10.4	-47919	-1613	5747.31		27625	6.195	9239	16026			9.94	Si
SLU 57	7.9	-59887	-1977	98.72		34525	6.195	10159	17622			8.92	Si
SLU 57	10.4	-52458	-1623	5554		30242	6.195	9588	16631			10.25	Si
SLU 72	7.9	-59706	-1981	-70.81		34421	6.195	10145	17597			8.88	Si
SLU 72	10.4	-51834	-1602	5882.84		29882	6.195	9540	16548			10.33	Si
SLU 9	7.9	-44615	-1817	-444.69		25721	6.195	8985	15585			8.58	Si
SLU 9	10.4	-38368	-1512	4522.66		22119	6.195	8505	14752			9.76	Si
SLU 50	7.9	-55211	-2072	-530.03		31829	6.195	9799	16998			8.2	Si
SLU 50	10.4	-46574	-1663	5819.43		26850	6.195	9136	15847			9.53	Si
SLU 7	7.9	-45927	-1787	-530.27		26477	6.195	9086	15760			8.82	Si
SLU 7	10.4	-39712	-1462	4450.54		22894	6.195	8608	14932			10.21	Si
SLU 49	7.9	-56292	-2172	-766.87		32452	6.195	9883	17142			7.89	Si
SLU 49	10.4	-47860	-1771	5499.48		27591	6.195	9234	16018			9.04	Si
SLU 51	7.9	-54980	-2202	-681.29		31696	6.195	9782	16967			7.71	Si
SLU 51	10.4	-46516	-1821	5571.61		26816	6.195	9131	15839			8.7	Si
SLU 47	7.9	-52379	-1959	-680.91		30196	6.195	9582	16620			8.48	Si
SLU 47	10.4	-43882	-1640	4947.24		25298	6.195	8929	15488			9.44	Si

Verifica a taglio nel piano secondo D.M. 17-01-18 (N.T.C.) §7.8.2.2.2 con rottura per scorrimento in combinazioni sismiche, γM = 2

Comb.	Quota	N	V par	M	σ0	σN	l'	fvd	Vt scorr.	Vt fess.diag.	Vt,lim	c.s.	Verifica
SLV 15	7.9	-45086	-25985	-16145.26		25992	6.195	13532	23472			0.9	No, Vu<V
SLV 15	10.4	-40889	-21728	18773.05		23573	6.195	13048	22633			1.04	Si
SLV 14	7.9	-42554	-20942	-17538.82		24532	6.195	13240	22966			1.1	Si
SLV 14	10.4	-40230	-17049	20911.03		23193	6.195	12972	22501			1.32	Si
SLV 13	7.9	-42554	-20942	-17538.82		24532	6.195	13240	22966			1.1	Si
SLV 13	10.4	-40230	-17049	20911.03		23193	6.195	12972	22501			1.32	Si
SLV 1	7.9	-39569	24165	16806.78		22812	6.195	12896	22369			0.93	No, Vu<V
SLV 1	10.4	-31251	20379	-10859.68		18016	6.195	11937	20705			1.02	Si
SLV 12	7.9	-46996	-16083	-2498.46		27093	6.195	13752	23854			1.48	Si
SLV 12	10.4	-38516	-14087	5158.99		22205	6.195	12774	22158			1.57	Si
SLV 3	7.9	-42102	19121	18200.35		24272	6.195	13188	22875			1.2	Si
SLV 3	10.4	-31910	15700	-12997.66		18396	6.195	12013	20837			1.33	Si
SLV 4	7.9	-42102	19121	18200.35		24272	6.195	13188	22875			1.2	Si
SLV 4	10.4	-31910	15700	-12997.66		18396	6.195	12013	20837			1.33	Si
SLV 11	7.9	-46996	-16083	-2498.46		27093	6.195	13752	23854			1.48	Si
SLV 11	10.4	-38516	-14087	5158.99		22205	6.195	12774	22158			1.57	Si
SLV 16	7.9	-45086	-25985	-16145.26		25992	6.195	13532	23472			0.9	No, Vu<V
SLV 16	10.4	-40889	-21728	18773.05		23573	6.195	13048	22633			1.04	Si
SLV 2	7.9	-39569	24165	16806.78		22812	6.195	12896	22369			0.93	No, Vu<V
SLV 2	10.4	-31251	20379	-10859.68		18016	6.195	11937	20705			1.02	Si

Verifica a pressoflessione fuori piano D.M. 17-01-18 (N.T.C.)

quota 9.675 Wa 0.05 denominatore 8 γM = 2

Comb.	fd	Sa	σ0	N	M	Mc	Coeff.s.	Verifica
SLV 6	143750	0.45	19817	-34374	775.57	4031.92	5.2	Si
SLV 5	143750	0.45	19817	-34374	775.57	4031.92	5.2	Si
SLV 2	143750	0.45	20167	-34982	775.57	4089.13	5.27	Si
SLV 1	143750	0.45	20167	-34982	775.57	4089.13	5.27	Si
SLV 9	143750	0.45	20694	-35896	775.57	4174.28	5.38	Si
SLV 10	143750	0.45	20694	-35896	775.57	4174.28	5.38	Si
SLV 4	143750	0.45	21344	-37024	775.57	4277.87	5.52	Si
SLV 3	143750	0.45	21344	-37024	775.57	4277.87	5.52	Si
SLV 14	143750	0.45	23090	-40052	775.57	4547.69	5.86	Si
SLV 13	143750	0.45	23090	-40052	775.57	4547.69	5.86	Si

Verifica dei meccanismi locali di collasso con analisi cinematica lineare

forza di aggancio al piano = 0 quota mezzeria = 9.675 Wa = 0.05 Ta = 0.0752

Comb.	N top	N base	V orto	α0	M*	e*	a0*	aLim	Verifica
SLV 6	-30718	-37660	780	0.024	4002.1	0.939	0.37068	11.49604	No
SLV 5	-30718	-37660	780	0.024	4002.1	0.939	0.37068	11.49604	No
SLV 7	-31069	-46101	-768	0.024	4037.6	0.94	0.37776	11.49604	No
SLV 8	-31069	-46101	-768	0.024	4037.6	0.94	0.37776	11.49604	No
SLV 9	-33365	-38555	777	0.025	4270.2	0.942	0.38677	11.49604	No
SLV 10	-33365	-38555	777	0.025	4270.2	0.942	0.38677	11.49604	No
SLV 12	-33716	-46996	-771	0.025	4305.8	0.943	0.39098	11.49604	No
SLV 11	-33716	-46996	-771	0.025	4305.8	0.943	0.39098	11.49604	No
SLV 16	-36682	-45086	-232	0.039	4606.5	0.946	0.60077	12.98863	No
SLV 15	-36682	-45086	-232	0.039	4606.5	0.946	0.60077	12.98863	No

Tabella dei coefficienti di sicurezza minimi

Stato limite	Coeff.s.	Comb.	Verifica
PF_SLU	16.59	SLU 71	Si
V_SLU	7.706	SLU 51	Si
PF_SLV	4.828	SLV 13	Si
V_SLV	0.903	SLV 15	No

Stato limite	Coeff.s.	Comb.	Verifica
PFFP_SLV	5.199	SLV 5	Si
R_SLV	0.032	SLV 5	No

Maschio 197

Verifiche condotte secondo D.M. 17-01-18 (N.T.C.)

Dati geometrici

X ini.	Y ini.	X fin.	Y fin.	Quota i.	Quota.s	l	Sp.	h netta	h ini.	h fin.	a	a.s.,sx	a.s.,dx
-0.134	1.046	-4.168	1.046	L5	L6	4.034	0.28	3.55	3.55	3.55			

Caratteristiche del materiale

(Circolare 7 21-01-19 C8.5.I) Muratura in mattoni pieni e malta di calce LC2_Corti

fb	fk	fvk0	fmedio	τ0	fv0	μ	ϕ	fv,lim	E	G	FC
600000			345000	9000	20000	0.58	0.77	32500	320000000	128000000	1.2

Verifica a pressoflessione nel piano secondo D.M. 17-01-18 NTC §7.8.2.2.1 in combinazioni non sismiche, γM = 3

Comb.	Quota	N	M	σ0	Mu	c.s.	Verifica
SLU 75	7.9	-31801	6453.64	28155	41973.23	6.504	Si
SLU 75	10	-28214	8124.39	24978	39456.83	4.857	Si
SLU 36	7.9	-27051	5548.49	23949	38520.03	6.942	Si
SLU 36	10	-24887	7542.98	22033	36619.43	4.855	Si
SLU 35	7.9	-27234	5462.27	24111	38671.57	7.08	Si
SLU 35	10	-25049	7631.28	22176	36768.51	4.818	Si
SLU 80	7.9	-32037	6406.3	28363	42118.45	6.575	Si
SLU 80	10	-28371	8294.26	25118	39579.02	4.772	Si
SLU 78	7.9	-32742	6597.61	28987	42539.29	6.448	Si
SLU 78	10	-29172	8595.86	25827	40184.68	4.675	Si
SLU 83	7.9	-31896	6366.16	28238	42031.82	6.602	Si
SLU 83	10	-28581	8249.25	25303	39740.34	4.817	Si
SLU 79	7.9	-32220	6320.07	28525	42229.93	6.682	Si
SLU 79	10	-28532	8382.56	25261	39703.41	4.736	Si
SLU 84	7.9	-31713	6452.38	28076	41917.74	6.496	Si
SLU 84	10	-28419	8160.95	25160	39616.29	4.854	Si
SLU 77	7.9	-32925	6511.39	29149	42645.11	6.549	Si
SLU 77	10	-29334	8684.16	25970	40303.39	4.641	Si
SLU 74	7.9	-31985	6367.42	28317	42086.61	6.61	Si
SLU 74	10	-28375	8212.69	25121	39582.34	4.82	Si

Verifica a pressoflessione nel piano secondo D.M. 17-01-18 NTC §7.8.2.2.1 in combinazioni sismiche, γM = 2

Comb.	Quota	N	M	σ0	Mu	c.s.	Verifica
SLV 11	7.9	-25808	3666.01	22848	42320.35	11.544	Si
SLV 11	10	-24200	9225.57	21425	40252.72	4.363	Si
SLV 1	7.9	-18656	12360.63	16517	32542.99	2.633	Si
SLV 1	10	-11351	-3132.66	10050	21012.23	6.707	Si
SLV 14	7.9	-24089	-4883.44	21327	40106.7	8.213	Si
SLV 14	10	-24026	12318.42	21271	40023.88	3.249	Si
SLV 16	7.9	-25760	-3723.12	22806	42259.67	11.351	Si
SLV 16	10	-26154	13386.9	23155	42755.39	3.194	Si
SLV 3	7.9	-20327	13520.95	17996	34961.28	2.586	Si
SLV 3	10	-13479	-2064.18	11933	24532.07	11.885	Si
SLV 12	7.9	-25808	3666.01	22848	42320.35	11.544	Si
SLV 12	10	-24200	9225.57	21425	40252.72	4.363	Si
SLV 13	7.9	-24089	-4883.44	21327	40106.7	8.213	Si
SLV 13	10	-24026	12318.42	21271	40023.88	3.249	Si
SLV 2	7.9	-18656	12360.63	16517	32542.99	2.633	Si
SLV 2	10	-11351	-3132.66	10050	21012.23	6.707	Si
SLV 4	7.9	-20327	13520.95	17996	34961.28	2.586	Si
SLV 4	10	-13479	-2064.18	11933	24532.07	11.885	Si
SLV 15	7.9	-25760	-3723.12	22806	42259.67	11.351	Si
SLV 15	10	-26154	13386.9	23155	42755.39	3.194	Si

Verifica a taglio nel piano secondo D.M. 17-01-18 (N.T.C.) §7.8.2.2.2 con rottura per scorrimento in combinazioni non sismiche, γM = 3

Comb.	Quota	N	V par	M	σ0	σN	l'	fvd	Vt scorr.	Vt fess.diag.	Vt,lim	c.s.	Verifica
SLU 38	7.9	-26346	-3087	5357.18		23325	4.034	8665	9788			3.17	Si
SLU 38	10	-24085	-3122	7241.39		21323	4.034	8399	9486			3.04	Si
SLU 41	7.9	-26205	-3440	5317.04		23200	4.034	8649	9769			2.84	Si
SLU 41	10	-24295	-3438	7196.37		21509	4.034	8423	9514			2.77	Si
SLU 42	7.9	-26022	-3359	5403.27		23038	4.034	8627	9745			2.9	Si
SLU 42	10	-24134	-3394	7108.08		21366	4.034	8404	9493			2.8	Si
SLU 37	7.9	-26529	-3168	5270.95		23487	4.034	8687	9812			3.1	Si
SLU 37	10	-24247	-3166	7329.69		21467	4.034	8418	9508			3	Si
SLU 39	7.9	-25265	-3266	5173.07		22368	4.034	8538	9644			2.95	Si
SLU 39	10	-23336	-3264	6724.91		20660	4.034	8310	9387			2.88	Si
SLU 35	7.9	-27234	-3313	5462.27		24111	4.034	8770	9906			2.99	Si
SLU 35	10	-25049	-3311	7631.28		22176	4.034	8512	9615			2.9	Si
SLU 83	7.9	-31896	-3332	6366.16		28238	4.034	9321	10528			3.16	Si
SLU 83	10	-28581	-3330	8249.25		25303	4.034	8929	10086			3.03	Si
SLU 36	7.9	-27051	-3232	5548.49		23949	4.034	8749	9882			3.06	Si
SLU 36	10	-24887	-3268	7542.98		22033	4.034	8493	9593			2.94	Si
SLU 40	7.9	-25081	-3184	5259.3		22205	4.034	8516	9619			3.02	Si
SLU 40	10	-23175	-3221	6636.61		20517	4.034	8291	9365			2.91	Si
SLU 32	7.9	-26294	-3139	5318.3		23279	4.034	8659	9781			3.12	Si
SLU 32	10	-24090	-3137	7159.82		21327	4.034	8399	9487			3.02	Si

Verifica a taglio nel piano secondo D.M. 17-01-18 (N.T.C.) §7.8.2.2.2 con rottura per scorrimento in combinazioni sismiche, γM = 2

Comb.	Quota	N	V par	M	σ0	σN	l'	fvd	Vt scorr.	Vt fess.diag.	Vt,lim	c.s.	Verifica
SLV 15	7.9	-25760	-13782	-3723.12		22806	4.034	12895	14565			1.06	Si
SLV 15	10	-26154	-12991	13386.9		23155	4.034	12964	14643			1.13	Si
SLV 13	7.9	-24089	-12588	-4883.44		21327	4.034	12599	14230			1.13	Si
SLV 13	10	-24026	-11285	12318.42		21271	4.034	12587	14218			1.26	Si
SLV 1	7.9	-18656	11055	12360.63		16517	4.034	11637	13144			1.19	Si
SLV 1	10	-11351	10267	-3132.66		10050	4.034	10343	11683			1.14	Si
SLV 2	7.9	-18656	11055	12360.63		16517	4.034	11637	13144			1.19	Si
SLV 2	10	-11351	10267	-3132.66		10050	4.034	10343	11683			1.14	Si
SLV 16	7.9	-25760	-13782	-3723.12		22806	4.034	12895	14565			1.06	Si
SLV 16	10	-26154	-12991	13386.9		23155	4.034	12964	14643			1.13	Si
SLV 11	7.9	-25808	-6900	3666.01		22848	4.034	12903	14574			2.11	Si
SLV 11	10	-24200	-7439	9225.57		21425	4.034	12618	14253			1.92	Si
SLV 3	7.9	-20327	9860	13520.95		17996	4.034	11933	13478			1.37	Si
SLV 3	10	-13479	8560	-2064.18		11933	4.034	10720	12108			1.41	Si
SLV 4	7.9	-20327	9860	13520.95		17996	4.034	11933	13478			1.37	Si
SLV 4	10	-13479	8560	-2064.18		11933	4.034	10720	12108			1.41	Si
SLV 14	7.9	-24089	-12588	-4883.44		21327	4.034	12599	14230			1.13	Si
SLV 14	10	-24026	-11285	12318.42		21271	4.034	12587	14218			1.26	Si
SLV 12	7.9	-25808	-6900	3666.01		22848	4.034	12903	14574			2.11	Si
SLV 12	10	-24200	-7439	9225.57		21425	4.034	12618	14253			1.92	Si

Verifica a pressoflessione fuori piano D.M. 17-01-18 (N.T.C.)

quota 9.675 Wa 0.05 denominatore 8 γM = 2

Comb.	fd	Sa	σ0	N	M	Mc	Coeff.s.	Verifica
SLV 2	143750	0.45	10698	-12084	505.03	1543.59	3.06	Si
SLV 1	143750	0.45	10698	-12084	505.03	1543.59	3.06	Si
SLV 6	143750	0.45	12437	-14047	505.03	1766.46	3.5	Si
SLV 5	143750	0.45	12437	-14047	505.03	1766.46	3.5	Si
SLV 4	143750	0.45	12571	-14199	505.03	1783.4	3.53	Si
SLV 3	143750	0.45	12571	-14199	505.03	1783.4	3.53	Si
SLV 9	143750	0.45	15800	-17846	505.03	2175.41	4.31	Si
SLV 10	143750	0.45	15800	-17846	505.03	2175.41	4.31	Si
SLV 7	143750	0.45	18681	-21100	505.03	2502.4	4.95	Si
SLV 8	143750	0.45	18681	-21100	505.03	2502.4	4.95	Si

Verifica dei meccanismi locali di collasso con analisi cinematica lineare

forza di aggancio al piano = 0 quota mezzeria = 9.675 Wa = 0.05 Ta = 0.0752

Comb.	N top	N base	V orto	α0	M*	e*	a0*	aLim	Verifica
SLV 9	-12659	-20238	548	0.014	1865.2	0.921	0.22871	11.49604	No
SLV 10	-12659	-20238	548	0.014	1865.2	0.921	0.22871	11.49604	No
SLV 6	-10772	-18608	501	0.015	1676.3	0.914	0.23099	11.49604	No
SLV 5	-10772	-18608	501	0.015	1676.3	0.914	0.23099	11.49604	No
SLV 7	-17202	-24178	-548	0.02	2322.8	0.933	0.31076	11.49604	No
SLV 8	-17202	-24178	-548	0.02	2322.8	0.933	0.31076	11.49604	No
SLV 11	-19089	-25808	-500	0.024	2513.6	0.937	0.36705	11.49604	No
SLV 12	-19089	-25808	-500	0.024	2513.6	0.937	0.36705	11.49604	No
SLV 3	-12750	-20327	-237	0.034	1874.3	0.921	0.53154	12.98863	No
SLV 4	-12750	-20327	-237	0.034	1874.3	0.921	0.53154	12.98863	No

Tabella dei coefficienti di sicurezza minimi

Stato limite	Coeff.s.	Comb.	Verifica
PF_SLU	4.641	SLU 77	Si
V_SLU	2.768	SLU 41	Si
PF_SLV	2.586	SLV 3	Si
V_SLV	1.057	SLV 15	Si
PFFP_SLV	3.056	SLV 1	Si
R_SLV	0.02	SLV 9	No

Maschio 198

Verifiche condotte secondo D.M. 17-01-18 (N.T.C.)

Dati geometrici

X ini.	Y ini.	X fin.	Y fin.	Quota i.	Quota.s	l	Sp.	h netta	h ini.	h fin.	a	a.s.,sx	a.s.,dx
-11.893	3.334	-15.038	3.334	L5	L6	3.145	0.14	3.55	3.55	3.55			

Caratteristiche del materiale

(Circolare 7 21-01-19 C8.5.I) Muratura in mattoni pieni e malta di calce LC2_Corti

fb	fk	fvk0	fmedio	τ0	fv0	μ	ϕ	fv,lim	E	G	FC
600000			345000	9000	20000	0.58	0.77	32500	320000000	128000000	1.2

Verifica a pressoflessione nel piano secondo D.M. 17-01-18 NTC §7.8.2.2.1 in combinazioni non sismiche, γM = 3

Comb.	Quota	N	M	σ0	Mu	c.s.	Verifica
SLU 42	7.9	-7372	1210.3	16743	9208.64	7.609	Si
SLU 42	10	-7479	-368.83	16988	9307.88	25.236	Si
SLU 31	7.9	-7233	1115.4	16428	9079.36	8.14	Si
SLU 31	10	-7132	-317.96	16199	8984.24	28.256	Si
SLU 82	7.9	-9010	1347.22	20465	10608.24	7.874	Si
SLU 82	10	-8738	-370.14	19846	10391.9	28.076	Si
SLU 34	7.9	-7203	1102.5	16360	9050.99	8.21	Si
SLU 34	10	-7101	-334.97	16128	8954.66	26.733	Si
SLU 39	7.9	-7405	1223.84	16819	9239.63	7.55	Si
SLU 39	10	-7513	-351.37	17064	9338.68	26.578	Si
SLU 81	7.9	-9013	1347.87	20472	10610.85	7.872	Si
SLU 81	10	-8740	-369.69	19852	10393.89	28.115	Si

Comb.	Quota	N	M	σ0	Mu	c.s.	Verifica
SLU 40	7.9	-7402	1223.2	16812	9236.56	7.551	Si
SLU 40	10	-7510	-351.83	17059	9336.42	26.537	Si
SLU 41	7.9	-7375	1210.94	16751	9211.72	7.607	Si
SLU 41	10	-7482	-368.38	16993	9310.15	25.273	Si
SLU 84	7.9	-8980	1334.32	20396	10584.58	7.933	Si
SLU 84	10	-8707	-387.15	19775	10366.71	26.777	Si
SLU 83	7.9	-8983	1334.97	20404	10587.2	7.931	Si
SLU 83	10	-8709	-386.69	19781	10368.71	26.814	Si

Verifica a pressoflessione nel piano secondo D.M. 17-01-18 NTC §7.8.2.2.1 in combinazioni sismiche, γM = 2

Comb.	Quota	N	M	σ0	Mu	c.s.	Verifica
SLV 16	7.9	-1989	-1764.07	4518	3012.15	1.708	Si
SLV 16	10	-934	2927.01	0	0	0	No, e>l/2
SLV 3	7.9	-6351	3478.85	14425	8807.54	2.532	Si
SLV 3	10	-7443	-3145.83	16906	10084.68	3.206	Si
SLV 12	7.9	1838	235.94	0	0	0	No, Trazione
SLV 12	10	515	1016.26	0	0	0	No, Trazione
SLV 11	7.9	1838	235.94	0	0	0	No, Trazione
SLV 11	10	515	1016.26	0	0	0	No, Trazione
SLV 13	7.9	-6578	-1905.48	14941	9078.46	4.764	Si
SLV 13	10	-4129	2742.94	9377	5993.59	2.185	Si
SLV 14	7.9	-6578	-1905.48	14941	9078.46	4.764	Si
SLV 14	10	-4129	2742.94	9377	5993.59	2.185	Si
SLV 15	7.9	-1989	-1764.07	4518	3012.15	1.708	Si
SLV 15	10	-934	2927.01	0	0	0	No, e>l/2
SLV 7	7.9	529	1808.81	0	0	0	No, Trazione
SLV 7	10	-1438	-805.59	3265	2200.22	2.731	Si
SLV 4	7.9	-6351	3478.85	14425	8807.54	2.532	Si
SLV 4	10	-7443	-3145.83	16906	10084.68	3.206	Si
SLV 8	7.9	529	1808.81	0	0	0	No, Trazione
SLV 8	10	-1438	-805.59	3265	2200.22	2.731	Si

Verifica a taglio nel piano secondo D.M. 17-01-18 (N.T.C.) §7.8.2.2.2 con rottura per scorrimento in combinazioni non sismiche, γM = 3

Comb.	Quota	N	V par	M	σ0	σN	l'	fvd	Vt scorr.	Vt fess.diag.	Vt,lim	c.s.	Verifica
SLU 82	7.9	-9010	2396	1347.22		20465	3.1448	8284	3647			1.52	Si
SLU 82	10	-8738	2396	-370.14		19846	3.1448	8202	3611			1.51	Si
SLU 78	7.9	-9203	2236	1145.52		20904	3.1448	8343	3673			1.64	Si
SLU 78	10	-8770	2236	-489.25		19919	3.1448	8211	3615			1.62	Si
SLU 77	7.9	-9207	2235	1146.16		20911	3.1448	8344	3674			1.64	Si
SLU 77	10	-8772	2235	-488.8		19924	3.1448	8212	3616			1.62	Si
SLU 41	7.9	-7375	2237	1210.94		16751	3.1448	7789	3429			1.53	Si
SLU 41	10	-7482	2237	-368.38		16993	3.1448	7821	3444			1.54	Si
SLU 84	7.9	-8980	2397	1334.32		20396	3.1448	8275	3643			1.52	Si
SLU 84	10	-8707	2397	-387.15		19775	3.1448	8192	3607			1.5	Si
SLU 42	7.9	-7372	2238	1210.3		16743	3.1448	7788	3429			1.53	Si
SLU 42	10	-7479	2238	-368.83		16988	3.1448	7821	3443			1.54	Si
SLU 39	7.9	-7405	2236	1223.84		16819	3.1448	7798	3433			1.54	Si
SLU 39	10	-7513	2236	-351.37		17064	3.1448	7831	3448			1.54	Si
SLU 83	7.9	-8983	2397	1334.97		20404	3.1448	8276	3644			1.52	Si
SLU 83	10	-8709	2397	-386.69		19781	3.1448	8193	3607			1.51	Si
SLU 81	7.9	-9013	2396	1347.87		20472	3.1448	8285	3648			1.52	Si
SLU 81	10	-8740	2395	-369.69		19852	3.1448	8202	3611			1.51	Si
SLU 40	7.9	-7402	2237	1223.2		16812	3.1448	7797	3433			1.53	Si
SLU 40	10	-7510	2237	-351.83		17059	3.1448	7830	3447			1.54	Si

Verifica a taglio nel piano secondo D.M. 17-01-18 (N.T.C.) §7.8.2.2.2 con rottura per scorrimento in combinazioni sismiche, γM = 2

Comb.	Quota	N	V par	M	σ0	σN	l'	fvd	Vt scorr.	Vt fess.diag.	Vt,lim	c.s.	Verifica
SLV 1	7.9	-10940	4826	3337.43		24848	3.1448	13303	5857			1.21	Si
SLV 1	10	-10638	4414	-3329.9		24163	3.1448	13166	5797			1.31	Si
SLV 4	7.9	-6351	5839	3478.85		14758	3.074	11285	4857			0.83	No, Vu<V
SLV 4	10	-7443	5518	-3145.83		16906	3.1448	11715	5158			0.93	No, Vu<V
SLV 15	7.9	-1989	-2190	-1764.07		6908	2.0567	9715	2797			1.28	Si
SLV 15	10	-934	-1777	2927.01		0	0	8333	0			0	No, Vu<V
SLV 3	7.9	-6351	5839	3478.85		14758	3.074	11285	4857			0.83	No, Vu<V
SLV 3	10	-7443	5518	-3145.83		16906	3.1448	11715	5158			0.93	No, Vu<V
SLV 8	7.9	529	4211	1808.81		0	0	8333	0			0	No, Vu<V
SLV 8	10	-1438	4253	-805.59		3382	3.0362	9010	3830			0.9	No, Vu<V
SLV 11	7.9	1838	1803	235.94		0	0	8333	0			0	No, Vu<V
SLV 11	10	515	2064	1016.26		0	0	8333	0			0	No, Vu<V
SLV 7	7.9	529	4211	1808.81		0	0	8333	0			0	No, Vu<V
SLV 7	10	-1438	4253	-805.59		3382	3.0362	9010	3830			0.9	No, Vu<V
SLV 12	7.9	1838	1803	235.94		0	0	8333	0			0	No, Vu<V
SLV 12	10	515	2064	1016.26		0	0	8333	0			0	No, Vu<V
SLV 2	7.9	-10940	4826	3337.43		24848	3.1448	13303	5857			1.21	Si
SLV 2	10	-10638	4414	-3329.9		24163	3.1448	13166	5797			1.31	Si
SLV 16	7.9	-1989	-2190	-1764.07		6908	2.0567	9715	2797			1.28	Si
SLV 16	10	-934	-1777	2927.01		0	0	8333	0			0	No, Vu<V

Verifica a pressoflessione fuori piano D.M. 17-01-18 (N.T.C.)

quota 9.675 Wa 0.03 denominatore 8 γM = 2

Comb.	fd	Sa	σ0	N	M	Mc	Coeff.s.	Verifica
SLV 12	143750	0.45	0	265	205.8	0	0	No, Trazione
SLV 7	143750	0.45	0	-1704	205.8	0	0	No, e>t/2
SLV 15	143750	0.45	0	-1180	205.8	0	0	No, e>t/2
SLV 8	143750	0.45	0	-1704	205.8	0	0	No, e>t/2
SLV 16	143750	0.45	0	-1180	205.8	0	0	No, e>t/2
SLV 11	143750	0.45	0	265	205.8	0	0	No, Trazione
SLV 13	143750	0.45	9969	-4389	205.8	282.16	1.37	Si
SLV 14	143750	0.45	9969	-4389	205.8	282.16	1.37	Si
SLV 3	143750	0.45	17592	-7745	205.8	464.11	2.26	Si

Comb.	fd	Sa	σ0	N	M	Mc	Coeff.s.	Verifica
SLV 4	143750	0.45	17592	-7745	205.8	464.11	2.26	Si

Verifica dei meccanismi locali di collasso con analisi cinematica lineare

forza di aggancio al piano = 0 quota mezzeria = 9.675 Wa = 0.03 Ta = 0.1503

Comb.	N top	N base	V orto	α0	M*	e*	a0*	aLim	Verifica
SLV 8	-2848	529	-55	0	0	0	0	18.76006	No, Trazione
SLV 7	-2848	529	-55	0	0	0	0	18.76006	No, Trazione
SLV 11	-2483	1838	-45	0	0	0	0	18.76006	No, Trazione
SLV 12	-2483	1838	-45	0	0	0	0	18.76006	No, Trazione
SLV 10	-7816	-13458	55	0.017	1017.8	0.939	0.25884	18.76006	No
SLV 9	-7816	-13458	55	0.017	1017.8	0.939	0.25884	18.76006	No
SLV 5	-8181	-14767	45	0.018	1054.7	0.941	0.27601	18.76006	No
SLV 6	-8181	-14767	45	0.018	1054.7	0.941	0.27601	18.76006	No
SLV 13	-5524	-6578	32	0.019	786.3	0.925	0.30103	18.76006	No
SLV 14	-5524	-6578	32	0.019	786.3	0.925	0.30103	18.76006	No

Tabella dei coefficienti di sicurezza minimi

Stato limite	Coeff.s.	Comb.	Verifica
PF_SLU	7.55	SLU 39	Si
V_SLU	1.505	SLU 84	Si
PF_SLV	0	SLV 12	No
V_SLV	0	SLV 7	No
PFFP_SLV	0	SLV 12	No
R_SLV	0	SLV 12	No

Maschio 199

Verifiche condotte secondo D.M. 17-01-18 (N.T.C.)

Dati geometrici

X ini.	Y ini.	X fin.	Y fin.	Quota i.	Quota.s	l	Sp.	h netta	h ini.	h fin.	a	a.s.,sx	a.s.,dx
-9.746	3.334	-11.093	3.334	L5	L6	1.347	0.14	3.55	3.55	3.55			

Caratteristiche del materiale

(Circolare 7 21-01-19 C8.5.I) Muratura in mattoni pieni e malta di calce LC2_Corti

fb	fk	fvk0	fmedio	τ0	fv0	μ	ϕ	fv,lim	E	G	FC
600000			345000	9000	20000	0.58	0.77	32500	320000000	128000000	1.2

Verifica a pressoflessione nel piano secondo D.M. 17-01-18 NTC §7.8.2.2.1 in combinazioni non sismiche, γM = 3

Comb.	Quota	N	M	σ0	Mu	c.s.	Verifica
SLU 35	7.9	-1901	-1119.48	10080	1121.65	1.002	Si
SLU 35	10	-4359	1043.32	23118	2102.59	2.015	Si
SLU 41	7.9	-1738	-1222.49	0	0	0	No, e>l/2
SLU 41	10	-4467	1096.86	23690	2133.45	1.945	Si
SLU 39	7.9	-1748	-1222.65	0	0	0	No, e>l/2
SLU 39	10	-4476	1094.45	23738	2135.99	1.952	Si
SLU 42	7.9	-1737	-1222.74	0	0	0	No, e>l/2
SLU 42	10	-4467	1097.15	23687	2133.32	1.944	Si
SLU 40	7.9	-1747	-1222.9	0	0	0	No, e>l/2
SLU 40	10	-4476	1094.74	23735	2135.87	1.951	Si
SLU 36	7.9	-1899	-1119.74	10073	1120.96	1.001	Si
SLU 36	10	-4359	1043.61	23116	2102.46	2.015	Si
SLU 37	7.9	-1782	-1098.82	9451	1060.96	0.966	No, M>Mu
SLU 37	10	-4154	992.12	22028	2040.84	2.057	Si
SLU 31	7.9	-1800	-1099.57	9544	1070	0.973	No, M>Mu
SLU 31	10	-4171	987.79	22120	2046.19	2.071	Si
SLU 34	7.9	-1790	-1099.4	9492	1064.9	0.969	No, M>Mu
SLU 34	10	-4162	990.2	22072	2043.41	2.064	Si
SLU 38	7.9	-1781	-1099.07	9444	1060.26	0.965	No, M>Mu
SLU 38	10	-4153	992.41	22025	2040.71	2.056	Si

Verifica a pressoflessione nel piano secondo D.M. 17-01-18 NTC §7.8.2.2.1 in combinazioni sismiche, γM = 2

Comb.	Quota	N	M	σ0	Mu	c.s.	Verifica
SLV 14	7.9	-1413	-3032.21	0	0	0	No, e>l/2
SLV 14	10	-6874	2385.16	36452	3248.03	1.362	Si
SLV 1	7.9	-4818	2116.21	25550	2566.08	1.213	Si
SLV 1	10	184	-1547.86	0	0	0	No, Trazione
SLV 2	7.9	-4818	2116.21	25550	2566.08	1.213	Si
SLV 2	10	184	-1547.86	0	0	0	No, Trazione
SLV 11	7.9	2812	-2362.76	0	0	0	No, Trazione
SLV 11	10	-3608	2028.22	19135	2049.39	1.01	Si
SLV 8	7.9	1791	-818.24	0	0	0	No, Trazione
SLV 8	10	-1491	848.32	7906	939.05	1.107	Si
SLV 7	7.9	1791	-818.24	0	0	0	No, Trazione
SLV 7	10	-1491	848.32	7906	939.05	1.107	Si
SLV 3	7.9	-2318	1593.52	0	0	0	No, e>l/2
SLV 3	10	551	-1077.27	0	0	0	No, Trazione
SLV 4	7.9	-2318	1593.52	0	0	0	No, e>l/2
SLV 4	10	551	-1077.27	0	0	0	No, Trazione
SLV 13	7.9	-1413	-3032.21	0	0	0	No, e>l/2
SLV 13	10	-6874	2385.16	36452	3248.03	1.362	Si
SLV 12	7.9	2812	-2362.76	0	0	0	No, Trazione
SLV 12	10	-3608	2028.22	19135	2049.39	1.01	Si

Verifica a taglio nel piano secondo D.M. 17-01-18 (N.T.C.) §7.8.2.2.2 con rottura per scorrimento in combinazioni non sismiche, γM = 3

Comb.	Quota	N	V par	M	σ0	σN	l'	fvd	Vt scorr.	Vt fess.diag.	Vt,lim	c.s.	Verifica
SLU 35	7.9	-1901	-2075	-1119.48		53572	0.2534	10833	384			0.19	No, Vu<V
SLU 35	10	-4359	-2075	1043.32		23909	1.3024	8743	1594			0.77	No, Vu<V
SLU 37	7.9	-1782	-2013	-1098.82		74579	0.1707	10833	259			0.13	No, Vu<V
SLU 37	10	-4154	-2013	992.12		22756	1.3038	8590	1568			0.78	No, Vu<V
SLU 36	7.9	-1899	-2075	-1119.74		53888	0.2518	10833	382			0.18	No, Vu<V
SLU 36	10	-4359	-2076	1043.61		23912	1.3021	8744	1594			0.77	No, Vu<V
SLU 38	7.9	-1781	-2013	-1099.07		75335	0.1688	10833	256			0.13	No, Vu<V
SLU 38	10	-4153	-2014	992.41		22759	1.3035	8590	1568			0.78	No, Vu<V
SLU 31	7.9	-1800	-2011	-1099.57		68587	0.1874	10833	284			0.14	No, Vu<V
SLU 31	10	-4171	-2011	987.79		22745	1.3099	8588	1575			0.78	No, Vu<V
SLU 40	7.9	-1747	-2235	-1222.9		0	0	5556	0			0	No, Vu<V
SLU 40	10	-4476	-2236	1094.74		24849	1.2865	8869	1597			0.71	No, Vu<V
SLU 39	7.9	-1748	-2235	-1222.65		0	0	5556	0			0	No, Vu<V
SLU 39	10	-4476	-2235	1094.45		24846	1.2868	8868	1598			0.71	No, Vu<V
SLU 41	7.9	-1738	-2236	-1222.49		0	0	5556	0			0	No, Vu<V
SLU 41	10	-4467	-2236	1096.86		24856	1.2837	8870	1594			0.71	No, Vu<V
SLU 34	7.9	-1790	-2012	-1099.4		71993	0.1776	10833	269			0.13	No, Vu<V
SLU 34	10	-4162	-2013	990.2		22753	1.3066	8589	1571			0.78	No, Vu<V
SLU 42	7.9	-1737	-2237	-1222.74		0	0	5556	0			0	No, Vu<V
SLU 42	10	-4467	-2237	1097.15		24858	1.2834	8870	1594			0.71	No, Vu<V

Verifica a taglio nel piano secondo D.M. 17-01-18 (N.T.C.) §7.8.2.2.2 con rottura per scorrimento in combinazioni sismiche, γM = 2

Comb.	Quota	N	V par	M	σ0	σN	l'	fvd	Vt scorr.	Vt fess.diag.	Vt,lim	c.s.	Verifica
SLV 4	7.9	-2318	2099	1593.52		0	0	8333	0			0	No, Vu<V
SLV 4	10	551	1685	-1077.27		0	0	8333	0			0	No, Vu<V
SLV 7	7.9	1791	-1961	-818.24		0	0	8333	0			0	No, Vu<V
SLV 7	10	-1491	-2081	848.32		33989	0.3133	15131	664			0.32	No, Vu<V
SLV 1	7.9	-4818	3200	2116.21		48980	0.7026	16250	1598			0.5	No, Vu<V
SLV 1	10	184	2783	-1547.86		0	0	8333	0			0	No, Vu<V
SLV 3	7.9	-2318	2099	1593.52		0	0	8333	0			0	No, Vu<V
SLV 3	10	551	1685	-1077.27		0	0	8333	0			0	No, Vu<V
SLV 11	7.9	2812	-4341	-2362.76		0	0	8333	0			0	No, Vu<V
SLV 11	10	-3608	-4212	2028.22		77166	0.334	16250	760			0.18	No, Vu<V
SLV 13	7.9	-1413	-4734	-3032.21		0	0	8333	0			0	No, Vu<V
SLV 13	10	-6874	-4320	2385.16		50133	0.9793	16250	2228			0.52	No, Vu<V
SLV 12	7.9	2812	-4341	-2362.76		0	0	8333	0			0	No, Vu<V
SLV 12	10	-3608	-4212	2028.22		77166	0.334	16250	760			0.18	No, Vu<V
SLV 2	7.9	-4818	3200	2116.21		48980	0.7026	16250	1598			0.5	No, Vu<V
SLV 2	10	184	2783	-1547.86		0	0	8333	0			0	No, Vu<V
SLV 8	7.9	1791	-1961	-818.24		0	0	8333	0			0	No, Vu<V
SLV 8	10	-1491	-2081	848.32		33989	0.3133	15131	664			0.32	No, Vu<V
SLV 14	7.9	-1413	-4734	-3032.21		0	0	8333	0			0	No, Vu<V
SLV 14	10	-6874	-4320	2385.16		50133	0.9793	16250	2228			0.52	No, Vu<V

Verifica a pressoflessione fuori piano D.M. 17-01-18 (N.T.C.)

quota 9.675 Wa 0.03 denominatore 8 γM = 2

Comb.	fd	Sa	σ0	N	M	Mc	Coeff.s.	Verifica
SLV 4	143750	0.45	0	475	88.14	0	0	No, Trazione
SLV 1	143750	0.45	0	2	88.14	0	0	No, Trazione
SLV 3	143750	0.45	0	475	88.14	0	0	No, Trazione
SLV 2	143750	0.45	0	2	88.14	0	0	No, Trazione
SLV 8	143750	0.45	7616	-1436	88.14	94.26	1.07	Si
SLV 7	143750	0.45	7616	-1436	88.14	94.26	1.07	Si
SLV 6	143750	0.45	15986	-3014	88.14	183.4	2.08	Si
SLV 5	143750	0.45	15986	-3014	88.14	183.4	2.08	Si
SLV 11	143750	0.45	18816	-3548	88.14	210.11	2.38	Si
SLV 12	143750	0.45	18816	-3548	88.14	210.11	2.38	Si

Verifica dei meccanismi locali di collasso con analisi cinematica lineare

forza di aggancio al piano = 0 quota mezzeria = 9.675 Wa = 0.03 Ta = 0.1503

Comb.	N top	N base	V orto	α0	M*	e*	a0*	aLim	Verifica
SLV 2	-2017	-4818	-118	0	301.7	0.919	0	18.76006	No
SLV 11	-922	2812	16	0	0	0	0	18.76006	No, Trazione
SLV 14	-1945	-1413	131	0	294.5	0.917	0	18.76006	No
SLV 3	-1533	-2318	-131	0	253.4	0.908	0	18.76006	No
SLV 13	-1945	-1413	131	0	294.5	0.917	0	18.76006	No
SLV 12	-922	2812	16	0	0	0	0	18.76006	No, Trazione
SLV 4	-1533	-2318	-131	0	253.4	0.908	0	18.76006	No
SLV 1	-2017	-4818	-118	0	301.7	0.919	0	18.76006	No
SLV 7	-944	1791	-59	0	0	0	0	18.76006	No, Trazione
SLV 8	-944	1791	-59	0	0	0	0	18.76006	No, Trazione

Tabella dei coefficienti di sicurezza minimi

Stato limite	Coeff.s.	Comb.	Verifica
PF_SLU	0	SLU 39	No
V_SLU	0	SLU 39	No
PF_SLV	0	SLV 16	No
V_SLV	0	SLV 1	No
PFFP_SLV	0	SLV 4	No
R_SLV	0	SLV 16	No

Maschio 200

Verifiche condotte secondo D.M. 17-01-18 (N.T.C.)

Dati geometrici

X ini.	Y ini.	X fin.	Y fin.	Quota i.	Quota.s	l	Sp.	h netta	h ini.	h fin.	a	a.s.,sx	a.s.,dx
-19.687	6.536	-17.796	6.536	L5	L6	1.892	0.28	3.55	3.55	3.55			

Caratteristiche del materiale

(Circolare 7 21-01-19 C8.5.I) Muratura in mattoni pieni e malta di calce LC2_Corti

fb	fk	fvk0	fmedio	τ0	fv0	μ	ϕ	fv,lim	E	G	FC
600000			345000	9000	20000	0.58	0.77	32500	320000000	128000000	1.2

Verifica a pressoflessione nel piano secondo D.M. 17-01-18 NTC §7.8.2.2.1 in combinazioni non sismiche, γM = 3

Comb.	Quota	N	M	σ0	Mu	c.s.	Verifica
SLU 80	8.8	-12705	-144.51	23987	8478.31	58.67	Si
SLU 80	10.7	-12120	1646.82	22883	8243.39	5.006	Si
SLU 78	8.8	-12980	-129.53	24507	8583.65	66.27	Si
SLU 78	10.7	-12411	1666.51	23431	8361.91	5.018	Si
SLU 84	8.8	-12608	-137.82	23803	8440.19	61.243	Si
SLU 84	10.7	-12021	1653.57	22696	8202.11	4.96	Si
SLU 42	8.8	-10515	-161.04	19852	7521.51	46.706	Si
SLU 42	10.7	-10297	1465.29	19440	7414.68	5.06	Si
SLU 83	8.8	-12605	-142.12	23798	8439.04	59.38	Si
SLU 83	10.7	-12021	1652.48	22695	8201.96	4.963	Si
SLU 81	8.8	-12180	-108.12	22995	8267.89	76.471	Si
SLU 81	10.7	-11473	1568.28	21662	7966.13	5.08	Si
SLU 79	8.8	-12702	-148.81	23982	8477.17	56.965	Si
SLU 79	10.7	-12120	1645.73	22882	8243.23	5.009	Si
SLU 82	8.8	-12183	-103.81	23000	8269.09	79.653	Si
SLU 82	10.7	-11474	1569.37	21662	7966.3	5.076	Si
SLU 77	8.8	-12978	-133.83	24501	8582.55	64.13	Si
SLU 77	10.7	-12410	1665.42	23431	8361.76	5.021	Si
SLU 41	8.8	-10512	-165.35	19846	7520.09	45.481	Si
SLU 41	10.7	-10296	1464.2	19439	7414.5	5.064	Si

Verifica a pressoflessione nel piano secondo D.M. 17-01-18 NTC §7.8.2.2.1 in combinazioni sismiche, γM = 2

Comb.	Quota	N	M	σ0	Mu	c.s.	Verifica
SLV 8	8.8	-9586	-346.23	18099	7723.94	22.309	Si
SLV 8	10.7	-4812	2262.16	9085	4212.85	1.862	Si
SLV 3	8.8	-7737	-2045.32	14607	6443.09	3.15	Si
SLV 3	10.7	-9055	3568.02	17096	7366.43	2.065	Si
SLV 7	8.8	-9586	-346.23	18099	7723.94	22.309	Si
SLV 7	10.7	-4812	2262.16	9085	4212.85	1.862	Si
SLV 15	8.8	-10192	2191.94	19242	8121.71	3.705	Si
SLV 15	10.7	-4200	-1262.7	7930	3714.74	2.942	Si
SLV 1	8.8	-6888	-2230.5	13005	5821.87	2.61	Si
SLV 1	10.7	-11236	3238.11	21213	8782.29	2.712	Si
SLV 14	8.8	-9343	2006.76	17640	7561.38	3.768	Si
SLV 14	10.7	-6381	-1592.61	12047	5440.07	3.416	Si
SLV 4	8.8	-7737	-2045.32	14607	6443.09	3.15	Si
SLV 4	10.7	-9055	3568.02	17096	7366.43	2.065	Si
SLV 13	8.8	-9343	2006.76	17640	7561.38	3.768	Si
SLV 13	10.7	-6381	-1592.61	12047	5440.07	3.416	Si
SLV 2	8.8	-6888	-2230.5	13005	5821.87	2.61	Si
SLV 2	10.7	-11236	3238.11	21213	8782.29	2.712	Si
SLV 16	8.8	-10192	2191.94	19242	8121.71	3.705	Si
SLV 16	10.7	-4200	-1262.7	7930	3714.74	2.942	Si

Verifica a taglio nel piano secondo D.M. 17-01-18 (N.T.C.) §7.8.2.2.2 con rottura per scorrimento in combinazioni non sismiche, γM = 3

Comb.	Quota	N	V par	M	σ0	σN	l'	fvd	Vt scorr.	Vt fess.diag.	Vt,lim	c.s.	Verifica
SLU 79	8.8	-12702	-1804	-148.81		23982	1.8917	8753	4636			2.57	Si
SLU 79	10.7	-12120	-1812	1645.73		22882	1.8917	8607	4559			2.52	Si
SLU 41	8.8	-10512	-1640	-165.35		19846	1.8917	8202	4344			2.65	Si
SLU 41	10.7	-10296	-1648	1464.2		19439	1.8917	8147	4315			2.62	Si
SLU 80	8.8	-12705	-1802	-144.51		23987	1.8917	8754	4637			2.57	Si
SLU 80	10.7	-12120	-1808	1646.82		22883	1.8917	8607	4559			2.52	Si
SLU 84	8.8	-12608	-1800	-137.82		23803	1.8917	8729	4624			2.57	Si
SLU 84	10.7	-12021	-1808	1653.57		22696	1.8917	8582	4545			2.51	Si
SLU 38	8.8	-10612	-1640	-167.73		20036	1.8917	8227	4358			2.66	Si
SLU 38	10.7	-10396	-1644	1458.53		19627	1.8917	8172	4329			2.63	Si
SLU 77	8.8	-12978	-1814	-133.83		24501	1.8917	8822	4673			2.58	Si
SLU 77	10.7	-12410	-1822	1665.42		23431	1.8917	8680	4597			2.52	Si
SLU 83	8.8	-12605	-1802	-142.12		23798	1.8917	8729	4623			2.57	Si
SLU 83	10.7	-12021	-1812	1652.48		22695	1.8917	8582	4545			2.51	Si
SLU 42	8.8	-10515	-1638	-161.04		19852	1.8917	8202	4345			2.65	Si
SLU 42	10.7	-10297	-1645	1465.29		19440	1.8917	8148	4315			2.62	Si
SLU 37	8.8	-10609	-1642	-172.04		20030	1.8917	8226	4357			2.65	Si
SLU 37	10.7	-10395	-1648	1457.44		19626	1.8917	8172	4329			2.63	Si
SLU 78	8.8	-12980	-1812	-129.53		24507	1.8917	8823	4673			2.58	Si
SLU 78	10.7	-12411	-1818	1666.51		23431	1.8917	8680	4597			2.53	Si

Verifica a taglio nel piano secondo D.M. 17-01-18 (N.T.C.) §7.8.2.2.2 con rottura per scorrimento in combinazioni sismiche, γM = 2

Comb.	Quota	N	V par	M	σ0	σN	l'	fvd	Vt scorr.	Vt fess.diag.	Vt,lim	c.s.	Verifica
SLV 15	8.8	-10192	3532	2191.94		19242	1.8917	12182	6452			1.83	Si
SLV 15	10.7	-4200	2934	-1262.7		7930	1.8917	9919	5254			1.79	Si
SLV 3	8.8	-7737	-5167	-2045.32		14607	1.8917	11255	5961			1.15	Si
SLV 3	10.7	-9055	-4075	3568.02		19536	1.6554	12241	5674			1.39	Si
SLV 4	8.8	-7737	-5167	-2045.32		14607	1.8917	11255	5961			1.15	Si
SLV 4	10.7	-9055	-4075	3568.02		19536	1.6554	12241	5674			1.39	Si
SLV 6	8.8	-6758	-2919	-963.5		12758	1.8917	10885	5765			1.98	Si
SLV 6	10.7	-12081	-3519	1162.46		22808	1.8917	12895	6830			1.94	Si
SLV 14	8.8	-9343	3165	2006.76		17640	1.8917	11861	6283			1.99	Si
SLV 14	10.7	-6381	2058	-1592.61		12047	1.8917	10743	5690			2.76	Si

Comb.	Quota	N	V par	M	σ0	σN	l'	fvd	Vt scorr.	Vt fess.diag.	Vt,lim	c.s.	Verifica
SLV 5	8.8	-6758	-2919	-963.5		12758	1.8917	10885	5765			1.98	Si
SLV 5	10.7	-12081	-3519	1162.46		22808	1.8917	12895	6830			1.94	Si
SLV 2	8.8	-6888	-5534	-2230.5		13184	1.8661	10970	5732			1.04	Si
SLV 2	10.7	-11236	-4950	3238.11		21213	1.8917	12576	6661			1.35	Si
SLV 13	8.8	-9343	3165	2006.76		17640	1.8917	11861	6283			1.99	Si
SLV 13	10.7	-6381	2058	-1592.61		12047	1.8917	10743	5690			2.76	Si
SLV 1	8.8	-6888	-5534	-2230.5		13184	1.8661	10970	5732			1.04	Si
SLV 1	10.7	-11236	-4950	3238.11		21213	1.8917	12576	6661			1.35	Si
SLV 16	8.8	-10192	3532	2191.94		19242	1.8917	12182	6452			1.83	Si
SLV 16	10.7	-4200	2934	-1262.7		7930	1.8917	9919	5254			1.79	Si

Verifica a pressoflessione fuori piano D.M. 17-01-18 (N.T.C.)

quota 9.675 Wa 0.05 denominatore 8 γM = 2

Comb.	fd	Sa	σ0	N	M	Mc	Coeff.s.	Verifica
SLV 12	143750	0.45	10723	-5680	231.44	725.38	3.13	Si
SLV 11	143750	0.45	10723	-5680	231.44	725.38	3.13	Si
SLV 7	143750	0.45	11901	-6303	231.44	796.52	3.44	Si
SLV 8	143750	0.45	11901	-6303	231.44	796.52	3.44	Si
SLV 16	143750	0.45	12580	-6663	231.44	836.81	3.62	Si
SLV 15	143750	0.45	12580	-6663	231.44	836.81	3.62	Si
SLV 14	143750	0.45	15349	-8130	231.44	995.2	4.3	Si
SLV 13	143750	0.45	15349	-8130	231.44	995.2	4.3	Si
SLV 4	143750	0.45	16505	-8742	231.44	1058.55	4.57	Si
SLV 3	143750	0.45	16505	-8742	231.44	1058.55	4.57	Si

Verifica dei meccanismi locali di collasso con analisi cinematica lineare

forza di aggancio al piano = 0 quota mezzeria = 9.675 Wa = 0.05 Ta = 0.0752

Comb.	N top	N base	V orto	α0	M*	e*	a0*	aLim	Verifica
SLV 12	-2649	-10052	138	0.023	549.7	0.894	0.37538	11.49604	No
SLV 11	-2649	-10052	138	0.023	549.7	0.894	0.37538	11.49604	No
SLV 7	-2843	-10538	138	0.024	568.4	0.895	0.38655	11.49604	No
SLV 8	-2843	-10538	138	0.024	568.4	0.895	0.38655	11.49604	No
SLV 9	-9317	-6832	-137	0.033	1215.6	0.939	0.51152	11.49604	No
SLV 10	-9317	-6832	-137	0.033	1215.6	0.939	0.51152	11.49604	No
SLV 5	-9511	-7317	-137	0.033	1235.3	0.94	0.51261	11.49604	No
SLV 6	-9511	-7317	-137	0.033	1235.3	0.94	0.51261	11.49604	No
SLV 1	-7404	-9010	-41	0.042	1022.3	0.93	0.66047	12.98863	No
SLV 2	-7404	-9010	-41	0.042	1022.3	0.93	0.66047	12.98863	No

Tabella dei coefficienti di sicurezza minimi

Stato limite	Coeff.s.	Comb.	Verifica
PF_SLU	4.96	SLU 84	Si
V_SLU	2.508	SLU 83	Si
PF_SLV	1.862	SLV 7	Si
V_SLV	1.036	SLV 1	Si
PFFP_SLV	3.134	SLV 11	Si
R_SLV	0.033	SLV 11	No

Maschio 201

Verifiche condotte secondo D.M. 17-01-18 (N.T.C.)

Dati geometrici

X ini.	Y ini.	X fin.	Y fin.	Quota i.	Quota.s	l	Sp.	h netta	h ini.	h fin.	a	a.s.,sx	a.s.,dx
-16.796	6.536	-12.901	6.536	L5	L6	3.895	0.28	3.55	3.55	3.55			

Caratteristiche del materiale

(Circolare 7 21-01-19 C8.5.I) Muratura in mattoni pieni e malta di calce LC2_Corti

fb	fk	fvk0	fmedio	τ0	fv0	μ	ϕ	fv,lim	E	G	FC
600000			345000	9000	20000	0.58	0.77	32500	320000000	128000000	1.2

Verifica a pressoflessione nel piano secondo D.M. 17-01-18 NTC §7.8.2.2.1 in combinazioni non sismiche, γM = 3

Comb.	Quota	N	M	σ0	Mu	c.s.	Verifica
SLU 50	8.8	-24536	-364.39	22497	34586.16	94.915	Si
SLU 50	10.7	-20076	593.57	18408	30262.55	50.984	Si
SLU 7	8.8	-20589	-292.26	18879	30804.43	105.399	Si
SLU 7	10.7	-17178	429.4	15751	26984.86	62.843	Si
SLU 9	8.8	-20094	-275.73	18425	30282.11	109.824	Si
SLU 9	10.7	-16674	481.88	15289	26377.27	54.738	Si
SLU 8	8.8	-20085	-283.21	18417	30272.51	106.891	Si
SLU 8	10.7	-16665	504.12	15281	26367.4	52.304	Si
SLU 6	8.8	-20580	-299.74	18871	30795.03	102.739	Si
SLU 6	10.7	-17170	451.64	15743	26975.17	59.728	Si
SLU 72	8.8	-26838	-299.09	24609	36477.23	121.962	Si
SLU 72	10.7	-22413	473.05	20551	32636.56	68.991	Si
SLU 49	8.8	-25039	-373.45	22959	35019.79	93.775	Si
SLU 49	10.7	-20588	518.86	18878	30803.43	59.367	Si
SLU 51	8.8	-24545	-356.91	22506	34594.01	96.925	Si
SLU 51	10.7	-20084	571.34	18416	30271.21	52.983	Si
SLU 71	8.8	-26829	-306.56	24601	36470.29	118.966	Si
SLU 71	10.7	-22405	495.28	20543	32628.73	65.879	Si
SLU 48	8.8	-25030	-380.92	22951	35012.14	91.914	Si
SLU 48	10.7	-20580	541.09	18871	30794.95	56.912	Si

Verifica a pressoflessione nel piano secondo D.M. 17-01-18 NTC §7.8.2.2.1 in combinazioni sismiche, γM = 2

Comb.	Quota	N	M	σ0	Mu	c.s.	Verifica
SLV 10	8.8	-9875	1765.46	9055	17806.1	10.086	Si
SLV 10	10.7	-10561	-4523.46	9684	18937.12	4.186	Si
SLV 15	8.8	-20581	6021.22	18871	33890.53	5.629	Si
SLV 15	10.7	-16806	-6859.57	15410	28602.04	4.17	Si
SLV 16	8.8	-20581	6021.22	18871	33890.53	5.629	Si
SLV 16	10.7	-16806	-6859.57	15410	28602.04	4.17	Si
SLV 14	8.8	-15433	6059.24	14151	26574.91	4.386	Si
SLV 14	10.7	-13960	-8260.56	12800	24338.62	2.946	Si
SLV 9	8.8	-9875	1765.46	9055	17806.1	10.086	Si
SLV 9	10.7	-10561	-4523.46	9684	18937.12	4.186	Si
SLV 4	8.8	-21859	-6373.41	20043	35586.88	5.584	Si
SLV 4	10.7	-16582	8487.86	15205	28275.54	3.331	Si
SLV 3	8.8	-21859	-6373.41	20043	35586.88	5.584	Si
SLV 3	10.7	-16582	8487.86	15205	28275.54	3.331	Si
SLV 2	8.8	-16711	-6335.39	15323	28463.55	4.493	Si
SLV 2	10.7	-13736	7086.86	12595	23993.51	3.386	Si
SLV 1	8.8	-16711	-6335.39	15323	28463.55	4.493	Si
SLV 1	10.7	-13736	7086.86	12595	23993.51	3.386	Si
SLV 13	8.8	-15433	6059.24	14151	26574.91	4.386	Si
SLV 13	10.7	-13960	-8260.56	12800	24338.62	2.946	Si

Verifica a taglio nel piano secondo D.M. 17-01-18 (N.T.C.) §7.8.2.2.2 con rottura per scorrimento in combinazioni non sismiche, γM = 3

Comb.	Quota	N	V par	M	σ0	σN	l'	fvd	Vt scorr.	Vt fess.diag.	Vt,lim	c.s.	Verifica
SLU 6	8.8	-20580	-421	-299.74		18871	3.895	8072	8803			20.92	Si
SLU 6	10.7	-17170	-421	451.64		15743	3.895	7655	8348			19.84	Si
SLU 49	8.8	-25039	-499	-373.45		22959	3.895	8617	9397			18.84	Si
SLU 49	10.7	-20588	-499	518.86		18878	3.895	8073	8804			17.64	Si
SLU 8	8.8	-20085	-439	-283.21		18417	3.895	8011	8737			19.91	Si
SLU 8	10.7	-16665	-439	504.12		15281	3.895	7593	8281			18.87	Si
SLU 71	8.8	-26829	-460	-306.56		24601	3.895	8836	9636			20.97	Si
SLU 71	10.7	-22405	-460	495.28		20543	3.895	8295	9046			19.68	Si
SLU 51	8.8	-24545	-517	-356.91		22506	3.895	8556	9331			18.05	Si
SLU 51	10.7	-20084	-517	571.34		18416	3.895	8011	8737			16.9	Si
SLU 48	8.8	-25030	-515	-380.92		22951	3.895	8616	9396			18.26	Si
SLU 48	10.7	-20580	-515	541.09		18871	3.895	8072	8803			17.1	Si
SLU 7	8.8	-20589	-405	-292.26		18879	3.895	8073	8804			21.74	Si
SLU 7	10.7	-17178	-405	429.4		15751	3.895	7656	8349			20.61	Si
SLU 50	8.8	-24536	-533	-364.39		22497	3.895	8555	9330			17.52	Si
SLU 50	10.7	-20076	-533	593.57		18408	3.895	8010	8736			16.4	Si
SLU 72	8.8	-26838	-444	-299.09		24609	3.895	8837	9637			21.71	Si
SLU 72	10.7	-22413	-444	473.05		20551	3.895	8296	9047			20.38	Si
SLU 9	8.8	-20094	-423	-275.73		18425	3.895	8012	8738			20.66	Si
SLU 9	10.7	-16674	-423	481.88		15289	3.895	7594	8282			19.57	Si

Verifica a taglio nel piano secondo D.M. 17-01-18 (N.T.C.) §7.8.2.2.2 con rottura per scorrimento in combinazioni sismiche, γM = 2

Comb.	Quota	N	V par	M	σ0	σN	l'	fvd	Vt scorr.	Vt fess.diag.	Vt,lim	c.s.	Verifica
SLV 3	8.8	-21859	-8499	-6373.41		20043	3.895	12342	13460			1.58	Si
SLV 3	10.7	-16582	-6866	8487.86		15205	3.895	11374	12405			1.81	Si
SLV 2	8.8	-16711	-7901	-6335.39		15323	3.895	11398	12431			1.57	Si
SLV 2	10.7	-13736	-6794	7086.86		12595	3.895	10852	11836			1.74	Si
SLV 10	8.8	-9875	3231	1765.46		9055	3.895	10144	11063			3.42	Si
SLV 10	10.7	-10561	1944	-4523.46		9684	3.895	10270	11200			5.76	Si
SLV 9	8.8	-9875	3231	1765.46		9055	3.895	10144	11063			3.42	Si
SLV 9	10.7	-10561	1944	-4523.46		9684	3.895	10270	11200			5.76	Si
SLV 14	8.8	-15433	8153	6059.24		14151	3.895	11164	12175			1.49	Si
SLV 14	10.7	-13960	6520	-8260.56		12800	3.895	10893	11880			1.82	Si
SLV 16	8.8	-20581	7555	6021.22		18871	3.895	12108	13204			1.75	Si
SLV 16	10.7	-16806	6448	-6859.57		15410	3.895	11415	12450			1.93	Si
SLV 15	8.8	-20581	7555	6021.22		18871	3.895	12108	13204			1.75	Si
SLV 15	10.7	-16806	6448	-6859.57		15410	3.895	11415	12450			1.93	Si
SLV 1	8.8	-16711	-7901	-6335.39		15323	3.895	11398	12431			1.57	Si
SLV 1	10.7	-13736	-6794	7086.86		12595	3.895	10852	11836			1.74	Si
SLV 4	8.8	-21859	-8499	-6373.41		20043	3.895	12342	13460			1.58	Si
SLV 4	10.7	-16582	-6866	8487.86		15205	3.895	11374	12405			1.81	Si
SLV 13	8.8	-15433	8153	6059.24		14151	3.895	11164	12175			1.49	Si
SLV 13	10.7	-13960	6520	-8260.56		12800	3.895	10893	11880			1.82	Si

Verifica a pressoflessione fuori piano D.M. 17-01-18 (N.T.C.)

quota 9.675 Wa 0.05 denominatore 8 γM = 2

Comb.	fd	Sa	σ0	N	M	Mc	Coeff.s.	Verifica
SLV 5	143750	0.45	9825	-10715	476.54	1379.45	2.89	Si
SLV 6	143750	0.45	9825	-10715	476.54	1379.45	2.89	Si
SLV 10	143750	0.45	9898	-10794	476.54	1388.78	2.91	Si
SLV 9	143750	0.45	9898	-10794	476.54	1388.78	2.91	Si
SLV 1	143750	0.45	13977	-15243	476.54	1889.92	3.97	Si
SLV 2	143750	0.45	13977	-15243	476.54	1889.92	3.97	Si
SLV 13	143750	0.45	14220	-15508	476.54	1918.44	4.03	Si
SLV 14	143750	0.45	14220	-15508	476.54	1918.44	4.03	Si
SLV 3	143750	0.45	17609	-19204	476.54	2301.1	4.83	Si
SLV 4	143750	0.45	17609	-19204	476.54	2301.1	4.83	Si

Verifica dei meccanismi locali di collasso con analisi cinematica lineare

forza di aggancio al piano = 0 quota mezzeria = 9.675 Wa = 0.05 Ta = 0.0752

Comb.	N top	N base	V orto	α0	M*	e*	a0*	aLim	Verifica
SLV 6	-8710	-9946	-370	0.02	1450.2	0.907	0.32652	11.49604	No
SLV 5	-8710	-9946	-370	0.02	1450.2	0.907	0.32652	11.49604	No
SLV 10	-8908	-9974	-370	0.021	1469.9	0.908	0.33043	11.49604	No
SLV 9	-8908	-9974	-370	0.021	1469.9	0.908	0.33043	11.49604	No

Comb.	N top	N base	V orto	α0	M*	e*	a0*	aLim	Verifica
SLV 8	-15569	-27019	369	0.027	2137.7	0.93	0.42639	11.49604	No
SLV 7	-15569	-27019	369	0.027	2137.7	0.93	0.42639	11.49604	No
SLV 11	-15767	-27046	368	0.027	2157.7	0.931	0.42854	11.49604	No
SLV 12	-15767	-27046	368	0.027	2157.7	0.931	0.42854	11.49604	No
SLV 16	-13599	-21102	109	0.041	1939.1	0.925	0.64573	12.98863	No
SLV 15	-13599	-21102	109	0.041	1939.1	0.925	0.64573	12.98863	No

Tabella dei coefficienti di sicurezza minimi

Stato limite	Coeff.s.	Comb.	Verifica
PF_SLU	50.984	SLU 50	Si
V_SLU	16.399	SLU 50	Si
PF_SLV	2.946	SLV 13	Si
V_SLV	1.493	SLV 13	Si
PFFP_SLV	2.895	SLV 5	Si
R_SLV	0.028	SLV 5	No

Maschio 202

Verifiche condotte secondo D.M. 17-01-18 (N.T.C.)

Dati geometrici

X ini.	Y ini.	X fin.	Y fin.	Quota i.	Quota.s	l	Sp.	h netta	h ini.	h fin.	a	a.s.,sx	a.s.,dx
-11.901	6.536	-8.007	6.536	L5	L6	3.893	0.28	3.55	3.55	3.55			

Caratteristiche del materiale

(Circolare 7 21-01-19 C8.5.I) Muratura in mattoni pieni e malta di calce LC2_Corti

fb	fk	fvk0	fmedio	τ0	fv0	μ	ϕ	fv,lim	E	G	FC
600000			345000	9000	20000	0.58	0.77	32500	320000000	128000000	1.2

Verifica a pressoflessione nel piano secondo D.M. 17-01-18 NTC §7.8.2.2.1 in combinazioni non sismiche, γM = 3

Comb.	Quota	N	M	σ0	Mu	c.s.	Verifica
SLU 7	8.8	-19635	-170.67	18012	29770.53	174.43	Si
SLU 7	10.7	-16304	-959.11	14956	25910.06	27.015	Si
SLU 50	8.8	-23426	-195.13	21490	33571.67	172.043	Si
SLU 50	10.7	-19060	-1193.24	17485	29139.2	24.42	Si
SLU 48	8.8	-23950	-170.4	21970	34047.21	199.811	Si
SLU 48	10.7	-19590	-1122.51	17971	29721.49	26.478	Si
SLU 49	8.8	-23958	-168.27	21978	34054.83	202.386	Si
SLU 49	10.7	-19598	-1117.65	17978	29730.7	26.601	Si
SLU 72	8.8	-25618	-303.65	23501	35482.16	116.854	Si
SLU 72	10.7	-21300	-1143.46	19539	31517.52	27.563	Si
SLU 6	8.8	-19627	-172.8	18004	29761.3	172.227	Si
SLU 6	10.7	-16295	-963.97	14948	25899.62	26.868	Si
SLU 51	8.8	-23435	-193	21498	33579.48	173.983	Si
SLU 51	10.7	-19069	-1188.38	17493	29148.61	24.528	Si
SLU 8	8.8	-19103	-197.54	17524	29186.49	147.749	Si
SLU 8	10.7	-15765	-1034.7	14462	25240.82	24.394	Si
SLU 9	8.8	-19111	-195.41	17532	29195.91	149.408	Si
SLU 9	10.7	-15774	-1029.84	14470	25251.45	24.52	Si
SLU 71	8.8	-25610	-305.78	23493	35475.16	116.017	Si
SLU 71	10.7	-21292	-1148.32	19532	31508.94	27.439	Si

Verifica a pressoflessione nel piano secondo D.M. 17-01-18 NTC §7.8.2.2.1 in combinazioni sismiche, γM = 2

Comb.	Quota	N	M	σ0	Mu	c.s.	Verifica
SLV 13	8.8	-15846	5490.86	14536	27176.97	4.949	Si
SLV 13	10.7	-12766	-7641.89	11711	22469.18	2.94	Si
SLV 16	8.8	-21267	5647.54	19509	34788.99	6.16	Si
SLV 16	10.7	-16363	-7929.83	15011	27940.09	3.523	Si
SLV 6	8.8	-8868	-2180.26	8135	16112.68	7.39	Si
SLV 6	10.7	-8793	2265.12	8066	15985.91	7.057	Si
SLV 14	8.8	-15846	5490.86	14536	27176.97	4.949	Si
SLV 14	10.7	-12766	-7641.89	11711	22469.18	2.94	Si
SLV 15	8.8	-21267	5647.54	19509	34788.99	6.16	Si
SLV 15	10.7	-16363	-7929.83	15011	27940.09	3.523	Si
SLV 5	8.8	-8868	-2180.26	8135	16112.68	7.39	Si
SLV 5	10.7	-8793	2265.12	8066	15985.91	7.057	Si
SLV 3	8.8	-20260	-5872.96	18585	33440.12	5.694	Si
SLV 3	10.7	-16706	6794.88	15325	28442.08	4.186	Si
SLV 2	8.8	-14839	-6029.64	13613	25668.57	4.257	Si
SLV 2	10.7	-13109	7082.83	12026	23007.23	3.248	Si
SLV 4	8.8	-20260	-5872.96	18585	33440.12	5.694	Si
SLV 4	10.7	-16706	6794.88	15325	28442.08	4.186	Si
SLV 1	8.8	-14839	-6029.64	13613	25668.57	4.257	Si
SLV 1	10.7	-13109	7082.83	12026	23007.23	3.248	Si

Verifica a taglio nel piano secondo D.M. 17-01-18 (N.T.C.) §7.8.2.2.2 con rottura per scorrimento in combinazioni non sismiche, γM = 3

Comb.	Quota	N	V par	M	σ0	σN	l'	fvd	Vt scorr.	Vt fess.diag.	Vt,lim	c.s.	Verifica
SLU 50	8.8	-23426	564	-195.13		21490	3.8933	8421	9180			16.27	Si
SLU 50	10.7	-19060	564	-1193.24		17485	3.8933	7887	8598			15.24	Si
SLU 49	8.8	-23958	539	-168.27		21978	3.8933	8486	9251			17.16	Si
SLU 49	10.7	-19598	539	-1117.65		17978	3.8933	7953	8669			16.08	Si
SLU 8	8.8	-19103	474	-197.54		17524	3.8933	7892	8603			18.13	Si
SLU 8	10.7	-15765	474	-1034.7		14462	3.8933	7484	8158			17.2	Si
SLU 72	8.8	-25618	492	-303.65		23501	3.8933	8689	9472			19.24	Si
SLU 72	10.7	-21300	492	-1143.46		19539	3.8933	8161	8896			18.08	Si
SLU 9	8.8	-19111	473	-195.41		17532	3.8933	7893	8604			18.19	Si
SLU 9	10.7	-15774	473	-1029.84		14470	3.8933	7485	8159			17.25	Si

Comb.	Quota	N	V par	M	σ0	σN	l'	fvd	Vt scorr.	Vt fess.diag.	Vt,lim	c.s.	Verifica
SLU 71	8.8	-25610	494	-305.78		23493	3.8933	8688	9471			19.18	Si
SLU 71	10.7	-21292	494	-1148.32		19532	3.8933	8160	8895			18.02	Si
SLU 48	8.8	-23950	541	-170.4		21970	3.8933	8485	9249			17.11	Si
SLU 48	10.7	-19590	541	-1122.51		17971	3.8933	7952	8668			16.04	Si
SLU 51	8.8	-23435	563	-193		21498	3.8933	8422	9181			16.31	Si
SLU 51	10.7	-19069	563	-1188.38		17493	3.8933	7888	8599			15.28	Si
SLU 6	8.8	-19627	451	-172.8		18004	3.8933	7956	8673			19.24	Si
SLU 6	10.7	-16295	451	-963.97		14948	3.8933	7549	8229			18.25	Si
SLU 7	8.8	-19635	449	-170.67		18012	3.8933	7957	8674			19.3	Si
SLU 7	10.7	-16304	449	-959.11		14956	3.8933	7550	8230			18.31	Si

Verifica a taglio nel piano secondo D.M. 17-01-18 (N.T.C.) §7.8.2.2.2 con rottura per scorrimento in combinazioni sismiche, γM = 2

Comb.	Quota	N	V par	M	σ0	σN	l'	fvd	Vt scorr.	Vt fess.diag.	Vt,lim	c.s.	Verifica
SLV 2	8.8	-14839	-7674	-6029.64		13613	3.8933	11056	12052			1.57	Si
SLV 2	10.7	-13109	-6373	7082.83		12026	3.8933	10738	11706			1.84	Si
SLV 4	8.8	-20260	-7554	-5872.96		18585	3.8933	12050	13136			1.74	Si
SLV 4	10.7	-16706	-6325	6794.88		15325	3.8933	11398	12426			1.96	Si
SLV 16	8.8	-21267	7995	5647.54		19509	3.8933	12235	13338			1.67	Si
SLV 16	10.7	-16363	6693	-7929.83		15011	3.8933	11335	12357			1.85	Si
SLV 6	8.8	-8868	-2373	-2180.26		8135	3.8933	9960	10858			4.58	Si
SLV 6	10.7	-8793	-1872	2265.12		8066	3.8933	9946	10843			5.79	Si
SLV 5	8.8	-8868	-2373	-2180.26		8135	3.8933	9960	10858			4.58	Si
SLV 5	10.7	-8793	-1872	2265.12		8066	3.8933	9946	10843			5.79	Si
SLV 14	8.8	-15846	7874	5490.86		14536	3.8933	11241	12254			1.56	Si
SLV 14	10.7	-12766	6645	-7641.89		11711	3.8933	10676	11637			1.75	Si
SLV 13	8.8	-15846	7874	5490.86		14536	3.8933	11241	12254			1.56	Si
SLV 13	10.7	-12766	6645	-7641.89		11711	3.8933	10676	11637			1.75	Si
SLV 1	8.8	-14839	-7674	-6029.64		13613	3.8933	11056	12052			1.57	Si
SLV 1	10.7	-13109	-6373	7082.83		12026	3.8933	10738	11706			1.84	Si
SLV 3	8.8	-20260	-7554	-5872.96		18585	3.8933	12050	13136			1.74	Si
SLV 3	10.7	-16706	-6325	6794.88		15325	3.8933	11398	12426			1.96	Si
SLV 15	8.8	-21267	7995	5647.54		19509	3.8933	12235	13338			1.67	Si
SLV 15	10.7	-16363	6693	-7929.83		15011	3.8933	11335	12357			1.85	Si

Verifica a pressoflessione fuori piano D.M. 17-01-18 (N.T.C.)

quota 9.675 Wa 0.05 denominatore 8 γM = 2

Comb.	fd	Sa	σ0	N	M	Mc	Coeff.s.	Verifica
SLV 10	143750	0.45	8960	-9768	476.33	1267.18	2.66	Si
SLV 9	143750	0.45	8960	-9768	476.33	1267.18	2.66	Si
SLV 5	143750	0.45	8982	-9791	476.33	1269.97	2.67	Si
SLV 6	143750	0.45	8982	-9791	476.33	1269.97	2.67	Si
SLV 14	143750	0.45	13445	-14656	476.33	1826.09	3.83	Si
SLV 13	143750	0.45	13445	-14656	476.33	1826.09	3.83	Si
SLV 2	143750	0.45	13516	-14734	476.33	1834.59	3.85	Si
SLV 1	143750	0.45	13516	-14734	476.33	1834.59	3.85	Si
SLV 16	143750	0.45	17310	-18870	476.33	2267.51	4.76	Si
SLV 15	143750	0.45	17310	-18870	476.33	2267.51	4.76	Si

Verifica dei meccanismi locali di collasso con analisi cinematica lineare

forza di aggancio al piano = 0 quota mezzeria = 9.675 Wa = 0.05 Ta = 0.0752

Comb.	N top	N base	V orto	α0	M*	e*	a0*	aLim	Verifica
SLV 10	-7566	-8882	-287	0.026	1337	0.903	0.41732	11.49604	No
SLV 9	-7566	-8882	-287	0.026	1337	0.903	0.41732	11.49604	No
SLV 5	-7733	-8839	-274	0.027	1353.5	0.903	0.43884	11.49604	No
SLV 6	-7733	-8839	-274	0.027	1353.5	0.903	0.43884	11.49604	No
SLV 8	-15507	-26668	288	0.031	2131.2	0.93	0.49207	11.49604	No
SLV 7	-15507	-26668	288	0.031	2131.2	0.93	0.49207	11.49604	No
SLV 12	-15339	-26711	275	0.032	2114.3	0.93	0.50197	11.49604	No
SLV 11	-15339	-26711	275	0.032	2114.3	0.93	0.50197	11.49604	No
SLV 4	-12981	-20378	107	0.041	1876.8	0.923	0.65038	12.98863	No
SLV 3	-12981	-20378	107	0.041	1876.8	0.923	0.65038	12.98863	No

Tabella dei coefficienti di sicurezza minimi

Stato limite	Coeff.s.	Comb.	Verifica
PF_SLU	24.394	SLU 8	Si
V_SLU	15.241	SLU 50	Si
PF_SLV	2.94	SLV 13	Si
V_SLV	1.556	SLV 13	Si
PFFP_SLV	2.66	SLV 9	Si
R_SLV	0.036	SLV 9	No

Maschio 203

Verifiche condotte secondo D.M. 17-01-18 (N.T.C.)

Dati geometrici

X ini.	Y ini.	X fin.	Y fin.	Quota i.	Quota.s	l	Sp.	h netta	h ini.	h fin.	a	a.s.,sx	a.s.,dx
-7.007	6.536	-5.105	6.536	L5	L6	1.902	0.28	3.55	3.55	3.55			

Caratteristiche del materiale

(Circolare 7 21-01-19 C8.5.I) Muratura in mattoni pieni e malta di calce LC2_Corti

fb	fk	fvk0	fmedio	τ0	fv0	μ	ϕ	fv,lim	E	G	FC
600000			345000	9000	20000	0.58	0.77	32500	320000000	128000000	1.2

Verifica a pressoflessione nel piano secondo D.M. 17-01-18 NTC §7.8.2.2.1 in combinazioni non sismiche, γM = 3

Comb.	Quota	N	M	σ0	Mu	c.s.	Verifica
SLU 73	8.8	-11545	58.37	21675	8059.57	138.082	Si
SLU 73	10.7	-10718	-1345.85	20121	7676.21	5.704	Si
SLU 42	8.8	-10360	116.74	19450	7501.28	64.258	Si
SLU 42	10.7	-10036	-1255.17	18842	7337.99	5.846	Si
SLU 81	8.8	-11858	90.28	22263	8196.7	90.797	Si
SLU 81	10.7	-11162	-1435.16	20956	7885.89	5.495	Si
SLU 61	8.8	-10921	39.32	20502	7773	197.702	Si
SLU 61	10.7	-10010	-1254.1	18793	7324.76	5.841	Si
SLU 40	8.8	-9819	112	18434	7225.88	64.519	Si
SLU 40	10.7	-9488	-1265.33	17812	7051.06	5.573	Si
SLU 82	8.8	-11856	87.69	22258	8195.52	93.465	Si
SLU 82	10.7	-11159	-1436.28	20949	7884.12	5.489	Si
SLU 31	8.8	-9509	82.68	17851	7062.23	85.419	Si
SLU 31	10.7	-9047	-1174.9	16984	6810.84	5.797	Si
SLU 83	8.8	-12400	95.02	23279	8423.69	88.654	Si
SLU 83	10.7	-11711	-1424.99	21986	8132.56	5.707	Si
SLU 84	8.8	-12397	92.43	23274	8422.57	91.126	Si
SLU 84	10.7	-11707	-1426.12	21979	8130.88	5.701	Si
SLU 39	8.8	-9822	114.58	18439	7227.31	63.074	Si
SLU 39	10.7	-9491	-1264.2	17819	7053.1	5.579	Si

Verifica a pressoflessione nel piano secondo D.M. 17-01-18 NTC §7.8.2.2.1 in combinazioni sismiche, γM = 2

Comb.	Quota	N	M	σ0	Mu	c.s.	Verifica
SLV 11	8.8	-10956	-313.03	20569	8666.89	27.687	Si
SLV 11	10.7	-7646	-3200.09	14355	6418.38	2.006	Si
SLV 14	8.8	-6841	2036.18	12842	5822.64	2.86	Si
SLV 14	10.7	-10151	-2680.61	19057	8149.44	3.04	Si
SLV 12	8.8	-10956	-313.03	20569	8666.89	27.687	Si
SLV 12	10.7	-7646	-3200.09	14355	6418.38	2.006	Si
SLV 1	8.8	-8131	-1512.21	15264	6767.54	4.475	Si
SLV 1	10.7	-5212	1874.36	9785	4560.46	2.433	Si
SLV 2	8.8	-8131	-1512.21	15264	6767.54	4.475	Si
SLV 2	10.7	-5212	1874.36	9785	4560.46	2.433	Si
SLV 13	8.8	-6841	2036.18	12842	5822.64	2.86	Si
SLV 13	10.7	-10151	-2680.61	19057	8149.44	3.04	Si
SLV 15	8.8	-8532	1525.13	16017	7051.26	4.623	Si
SLV 15	10.7	-9793	-3656.17	18385	7913.11	2.164	Si
SLV 7	8.8	-11343	-1377.55	21296	8908.9	6.467	Si
SLV 7	10.7	-6164	-1833.59	11573	5308.07	2.895	Si
SLV 16	8.8	-8532	1525.13	16017	7051.26	4.623	Si
SLV 16	10.7	-9793	-3656.17	18385	7913.11	2.164	Si
SLV 8	8.8	-11343	-1377.55	21296	8908.9	6.467	Si
SLV 8	10.7	-6164	-1833.59	11573	5308.07	2.895	Si

Verifica a taglio nel piano secondo D.M. 17-01-18 (N.T.C.) §7.8.2.2.2 con rottura per scorrimento in combinazioni non sismiche, γM = 3

Comb.	Quota	N	V par	M	σ0	σN	l'	fvd	Vt scorr.	Vt fess.diag.	Vt,lim	c.s.	Verifica
SLU 73	8.8	-11545	1493	58.37		21675	1.9023	8446	4499			3.01	Si
SLU 73	10.7	-10718	1502	-1345.85		20121	1.9023	8238	4388			2.92	Si
SLU 40	8.8	-9819	1463	112		18434	1.9023	8013	4268			2.92	Si
SLU 40	10.7	-9488	1472	-1265.33		17812	1.9023	7930	4224			2.87	Si
SLU 84	8.8	-12397	1621	92.43		23274	1.9023	8659	4612			2.85	Si
SLU 84	10.7	-11707	1632	-1426.12		21979	1.9023	8486	4520			2.77	Si
SLU 82	8.8	-11856	1620	87.69		22258	1.9023	8523	4540			2.8	Si
SLU 82	10.7	-11159	1631	-1436.28		20949	1.9023	8349	4447			2.73	Si
SLU 39	8.8	-9822	1463	114.58		18439	1.9023	8014	4269			2.92	Si
SLU 39	10.7	-9491	1475	-1264.2		17819	1.9023	7931	4225			2.86	Si
SLU 42	8.8	-10360	1464	116.74		19450	1.9023	8149	4341			2.96	Si
SLU 42	10.7	-10036	1473	-1255.17		18842	1.9023	8068	4297			2.92	Si
SLU 83	8.8	-12400	1621	95.02		23279	1.9023	8659	4612			2.85	Si
SLU 83	10.7	-11711	1634	-1424.99		21986	1.9023	8487	4521			2.77	Si
SLU 74	8.8	-12345	1525	56.8		23176	1.9023	8646	4605			3.02	Si
SLU 74	10.7	-11563	1537	-1369.11		21707	1.9023	8450	4501			2.93	Si
SLU 41	8.8	-10363	1464	119.33		19455	1.9023	8150	4341			2.96	Si
SLU 41	10.7	-10040	1475	-1254.04		18849	1.9023	8069	4298			2.91	Si
SLU 81	8.8	-11858	1620	90.28		22263	1.9023	8524	4540			2.8	Si
SLU 81	10.7	-11162	1633	-1435.16		20956	1.9023	8350	4448			2.72	Si

Verifica a taglio nel piano secondo D.M. 17-01-18 (N.T.C.) §7.8.2.2.2 con rottura per scorrimento in combinazioni sismiche, γM = 2

Comb.	Quota	N	V par	M	σ0	σN	l'	fvd	Vt scorr.	Vt fess.diag.	Vt,lim	c.s.	Verifica
SLV 9	8.8	-5319	4293	1390.47		9986	1.9023	10331	5503			1.28	Si
SLV 9	10.7	-8840	3635	51.78		16597	1.9023	11653	6207			1.71	Si
SLV 10	8.8	-5319	4293	1390.47		9986	1.9023	10331	5503			1.28	Si
SLV 10	10.7	-8840	3635	51.78		16597	1.9023	11653	6207			1.71	Si
SLV 15	8.8	-8532	4408	1525.13		16017	1.9023	11537	6145			1.39	Si
SLV 15	10.7	-9793	3868	-3656.17		20176	1.7335	12369	6003			1.55	Si
SLV 1	8.8	-8131	-2504	-1512.21		15264	1.9023	11386	6065			2.42	Si
SLV 1	10.7	-5212	-1947	1874.36		10489	1.7746	10431	5183			2.66	Si
SLV 3	8.8	-9822	-3773	-2023.26		18439	1.9023	12021	6403			1.7	Si
SLV 3	10.7	-4854	-2939	898.8		9112	1.9023	10156	5410			1.84	Si
SLV 13	8.8	-6841	5676	2036.18		12842	1.9023	10902	5807			1.02	Si
SLV 13	10.7	-10151	4860	-2680.61		19057	1.9023	12145	6469			1.33	Si
SLV 16	8.8	-8532	4408	1525.13		16017	1.9023	11537	6145			1.39	Si
SLV 16	10.7	-9793	3868	-3656.17		20176	1.7335	12369	6003			1.55	Si
SLV 2	8.8	-8131	-2504	-1512.21		15264	1.9023	11386	6065			2.42	Si
SLV 2	10.7	-5212	-1947	1874.36		10489	1.7746	10431	5183			2.66	Si
SLV 4	8.8	-9822	-3773	-2023.26		18439	1.9023	12021	6403			1.7	Si
SLV 4	10.7	-4854	-2939	898.8		9112	1.9023	10156	5410			1.84	Si
SLV 14	8.8	-6841	5676	2036.18		12842	1.9023	10902	5807			1.02	Si
SLV 14	10.7	-10151	4860	-2680.61		19057	1.9023	12145	6469			1.33	Si

Verifica a pressoflessione fuori piano D.M. 17-01-18 (N.T.C.)

quota 9.675 Wa 0.05 denominatore 8 γM = 2

Comb.	fd	Sa	σ0	N	M	Mc	Coeff.s.	Verifica
SLV 6	143750	0.45	11694	-6229	232.75	788.55	3.39	Si
SLV 5	143750	0.45	11694	-6229	232.75	788.55	3.39	Si
SLV 2	143750	0.45	12419	-6615	232.75	831.99	3.57	Si
SLV 1	143750	0.45	12419	-6615	232.75	831.99	3.57	Si
SLV 10	143750	0.45	12949	-6897	232.75	863.31	3.71	Si
SLV 9	143750	0.45	12949	-6897	232.75	863.31	3.71	Si
SLV 4	143750	0.45	14297	-7615	232.75	941.39	4.04	Si
SLV 3	143750	0.45	14297	-7615	232.75	941.39	4.04	Si
SLV 13	143750	0.45	16605	-8845	232.75	1069.97	4.6	Si
SLV 14	143750	0.45	16605	-8845	232.75	1069.97	4.6	Si

Verifica dei meccanismi locali di collasso con analisi cinematica lineare

forza di aggancio al piano = 0 quota mezzeria = 9.675 Wa = 0.05 Ta = 0.0752

Comb.	N top	N base	V orto	α0	M*	e*	a0*	aLim	Verifica
SLV 7	-3297	-11793	265	0	614.1	0.899	0	11.49604	No
SLV 8	-3297	-11793	265	0	614.1	0.899	0	11.49604	No
SLV 12	-3875	-12483	254	0.006	670.9	0.904	0.09556	11.49604	No
SLV 11	-3875	-12483	254	0.006	670.9	0.904	0.09556	11.49604	No
SLV 10	-8714	-5364	-265	0.02	1156.2	0.936	0.31793	11.49604	No
SLV 9	-8714	-5364	-265	0.02	1156.2	0.936	0.31793	11.49604	No
SLV 6	-8135	-4675	-254	0.02	1097.7	0.933	0.31857	11.49604	No
SLV 5	-8135	-4675	-254	0.02	1097.7	0.933	0.31857	11.49604	No
SLV 3	-4315	-8498	96	0.035	714.3	0.908	0.55498	12.98863	No
SLV 4	-4315	-8498	96	0.035	714.3	0.908	0.55498	12.98863	No

Tabella dei coefficienti di sicurezza minimi

Stato limite	Coeff.s.	Comb.	Verifica
PF_SLU	5.489	SLU 82	Si
V_SLU	2.723	SLU 81	Si
PF_SLV	2.006	SLV 11	Si
V_SLV	1.023	SLV 13	Si
PFFP_SLV	3.388	SLV 5	Si
R_SLV	0	SLV 7	No

Maschio 204

Verifiche condotte secondo D.M. 17-01-18 (N.T.C.)

Dati geometrici

X ini.	Y ini.	X fin.	Y fin.	Quota i.	Quota.s	l	Sp.	h netta	h ini.	h fin.	a	a.s.,sx	a.s.,dx
-11.003	-4.784	-11.003	-3.509	L5	Z medio 959 cm	1.275	0.28	1.69	1.69	1.69			

Caratteristiche del materiale

(Circolare 7 21-01-19 C8.5.I) Muratura in mattoni pieni e malta di calce LC2_Corti

fb	fk	fvk0	fmedio	τ0	fv0	μ	ϕ	fv,lim	E	G	FC
600000			345000	9000	20000	0.58	0.77	32500	320000000	128000000	1.2

Verifica a pressoflessione nel piano secondo D.M. 17-01-18 NTC §7.8.2.2.1 in combinazioni non sismiche, γM = 3

Comb.	Quota	N	M	σ0	Mu	c.s.	Verifica
SLU 35	7.9	-7524	111.75	21076	3555.58	31.818	Si
SLU 35	9.59	-5857	124.94	16407	2981.98	23.867	Si
SLU 81	7.9	-8912	115.4	24964	3940.34	34.146	Si
SLU 81	9.59	-6810	136.09	19075	3324.69	24.431	Si
SLU 33	7.9	-7311	98.15	20479	3488.98	35.547	Si
SLU 33	9.59	-5641	117.94	15801	2898.49	24.576	Si
SLU 42	7.9	-7530	94.64	21092	3557.33	37.586	Si
SLU 42	9.59	-5801	133.61	16249	2960.39	22.157	Si
SLU 41	7.9	-7539	101.48	21117	3560.1	35.081	Si
SLU 41	9.59	-5815	137.45	16288	2965.67	21.576	Si
SLU 36	7.9	-7515	104.91	21051	3552.8	33.865	Si
SLU 36	9.59	-5844	121.11	16369	2976.73	24.58	Si
SLU 83	7.9	-9116	122.16	25536	3989.82	32.661	Si
SLU 83	9.59	-7013	139.25	19644	3392.54	24.363	Si
SLU 40	7.9	-7326	87.88	20520	3493.64	39.753	Si
SLU 40	9.59	-5598	130.45	15681	2881.76	22.092	Si
SLU 39	7.9	-7335	94.72	20545	3496.5	36.914	Si
SLU 39	9.59	-5612	134.29	15719	2887.16	21.5	Si
SLU 32	7.9	-7320	104.99	20504	3491.84	33.26	Si
SLU 32	9.59	-5655	121.78	15839	2903.86	23.845	Si

Verifica a pressoflessione nel piano secondo D.M. 17-01-18 NTC §7.8.2.2.1 in combinazioni sismiche, γM = 2

Comb.	Quota	N	M	σ0	Mu	c.s.	Verifica
SLV 16	7.9	-4788	678.92	13411	2717.09	4.002	Si
SLV 16	9.59	-3701	-298.86	10368	2159.31	7.225	Si
SLV 8	7.9	-3822	381.52	10706	2223.14	5.827	Si
SLV 8	9.59	-3711	-243.07	10396	2164.67	8.906	Si
SLV 1	7.9	-7674	-511.83	21497	4031.7	7.877	Si
SLV 1	9.59	-5815	413.24	16290	3213.08	7.775	Si
SLV 5	7.9	-9037	-492.95	25313	4567.39	9.266	Si
SLV 5	9.59	-6214	503.85	17407	3397.24	6.743	Si
SLV 2	7.9	-7674	-511.83	21497	4031.7	7.877	Si
SLV 2	9.59	-5815	413.24	16290	3213.08	7.775	Si
SLV 15	7.9	-4788	678.92	13411	2717.09	4.002	Si

Comb.	Quota	N	M	σ0	Mu	c.s.	Verifica
SLV 15	9.59	-3701	-298.86	10368	2159.31	7.225	Si
SLV 7	7.9	-3822	381.52	10706	2223.14	5.827	Si
SLV 7	9.59	-3711	-243.07	10396	2164.67	8.906	Si
SLV 11	7.9	-3425	660.04	9595	2012.23	3.049	Si
SLV 11	9.59	-3302	-389.48	9250	1945.85	4.996	Si
SLV 12	7.9	-3425	660.04	9595	2012.23	3.049	Si
SLV 12	9.59	-3302	-389.48	9250	1945.85	4.996	Si
SLV 6	7.9	-9037	-492.95	25313	4567.39	9.266	Si
SLV 6	9.59	-6214	503.85	17407	3397.24	6.743	Si

Verifica a taglio nel piano secondo D.M. 17-01-18 (N.T.C.) §7.8.2.2.2 con rottura per scorrimento in combinazioni non sismiche, γM = 3

Comb.	Quota	N	V par	M	σ0	σN	I'	fvd	Vt scorr.	Vt fess.diag.	Vt,lim	c.s.	Verifica
SLU 51	7.9	-7872	216	107.11		22052	1.275	8496	3033			14.04	Si
SLU 51	9.59	-6088	334	39.47		17052	1.275	7829	2795			8.37	Si
SLU 45	7.9	-7723	223	112.34		21633	1.275	8440	3013			13.51	Si
SLU 45	9.59	-5940	320	46.55		16640	1.275	7774	2775			8.67	Si
SLU 48	7.9	-7927	224	119.1		22205	1.275	8516	3040			13.55	Si
SLU 48	9.59	-6143	331	49.71		17208	1.275	7850	2802			8.47	Si
SLU 49	7.9	-7918	211	112.27		22180	1.275	8513	3039			14.37	Si
SLU 49	9.59	-6129	329	45.87		17169	1.275	7845	2801			8.52	Si
SLU 43	7.9	-7473	226	100.42		20933	1.275	8347	2980			13.17	Si
SLU 43	9.59	-5696	315	36.98		15954	1.275	7683	2743			8.71	Si
SLU 46	7.9	-7714	210	105.5		21608	1.275	8437	3012			14.33	Si
SLU 46	9.59	-5927	318	42.71		16601	1.275	7769	2774			8.72	Si
SLU 44	7.9	-7458	205	89.03		20891	1.275	8341	2978			14.55	Si
SLU 44	9.59	-5673	311	30.58		15890	1.275	7674	2740			8.8	Si
SLU 71	7.9	-8439	193	123.4		23637	1.275	8707	3108			16.07	Si
SLU 71	9.59	-6543	316	68.84		18326	1.275	7999	2856			9.04	Si
SLU 47	7.9	-7662	206	95.79		21463	1.275	8417	3005			14.59	Si
SLU 47	9.59	-5876	322	33.75		16458	1.275	7750	2767			8.59	Si
SLU 50	7.9	-7881	229	113.94		22077	1.275	8499	3034			13.26	Si
SLU 50	9.59	-6101	336	43.31		17091	1.275	7834	2797			8.33	Si

Verifica a taglio nel piano secondo D.M. 17-01-18 (N.T.C.) §7.8.2.2.2 con rottura per scorrimento in combinazioni sismiche, γM = 2

Comb.	Quota	N	V par	M	σ0	σN	I'	fvd	Vt scorr.	Vt fess.diag.	Vt,lim	c.s.	Verifica
SLV 5	7.9	-9037	-2669	-492.95		25313	1.275	13396	4782			1.79	Si
SLV 5	9.59	-6214	-2272	503.85		17407	1.275	11815	4218			1.86	Si
SLV 16	7.9	-4788	3023	678.92		13411	1.275	11015	3933			1.3	Si
SLV 16	9.59	-3701	2742	-298.86		10368	1.275	10407	3715			1.36	Si
SLV 1	7.9	-7674	-2749	-511.83		21497	1.275	12633	4510			1.64	Si
SLV 1	9.59	-5815	-2317	413.24		16290	1.275	11591	4138			1.79	Si
SLV 15	7.9	-4788	3023	678.92		13411	1.275	11015	3933			1.3	Si
SLV 15	9.59	-3701	2742	-298.86		10368	1.275	10407	3715			1.36	Si
SLV 2	7.9	-7674	-2749	-511.83		21497	1.275	12633	4510			1.64	Si
SLV 2	9.59	-5815	-2317	413.24		16290	1.275	11591	4138			1.79	Si
SLV 12	7.9	-3425	2943	660.04		9595	1.275	10252	3660			1.24	Si
SLV 12	9.59	-3302	2697	-389.48		9250	1.275	10183	3635			1.35	Si
SLV 7	7.9	-3822	1595	381.52		10706	1.275	10475	3739			2.35	Si
SLV 7	9.59	-3711	1521	-243.07		10396	1.275	10413	3717			2.44	Si
SLV 6	7.9	-9037	-2669	-492.95		25313	1.275	13396	4782			1.79	Si
SLV 6	9.59	-6214	-2272	503.85		17407	1.275	11815	4218			1.86	Si
SLV 8	7.9	-3822	1595	381.52		10706	1.275	10475	3739			2.35	Si
SLV 8	9.59	-3711	1521	-243.07		10396	1.275	10413	3717			2.44	Si
SLV 11	7.9	-3425	2943	660.04		9595	1.275	10252	3660			1.24	Si
SLV 11	9.59	-3302	2697	-389.48		9250	1.275	10183	3635			1.35	Si

Verifica a pressoflessione fuori piano D.M. 17-01-18 (N.T.C.)

quota 8.745 Wa 0.05 denominatore 8 γM = 2

Comb.	fd	Sa	σ0	N	M	Mc	Coeff.s.	Verifica
SLV 12	143750	0.43	9166	-3272	34.58	423.77	12.26	Si
SLV 11	143750	0.43	9166	-3272	34.58	423.77	12.26	Si
SLV 7	143750	0.43	10751	-3838	34.58	490.06	14.17	Si
SLV 8	143750	0.43	10751	-3838	34.58	490.06	14.17	Si
SLV 16	143750	0.43	11349	-4052	34.58	514.55	14.88	Si
SLV 15	143750	0.43	11349	-4052	34.58	514.55	14.88	Si
SLV 13	143750	0.43	14805	-5285	34.58	650.3	18.81	Si
SLV 14	143750	0.43	14805	-5285	34.58	650.3	18.81	Si
SLV 3	143750	0.43	16632	-5938	34.58	718.11	20.77	Si
SLV 4	143750	0.43	16632	-5938	34.58	718.11	20.77	Si

Verifica dei meccanismi locali di collasso con analisi cinematica lineare

forza di aggancio al piano = 0 quota mezzeria = 8.745 Wa = 0.05 Ta = 0.017

Comb.	N top	N base	V orto	α0	M*	e*	a0*	aLim	Verifica
SLV 8	-3711	-3822	162	0.055	463.2	0.947	0.84833	4.54747	No
SLV 7	-3711	-3822	162	0.055	463.2	0.947	0.84833	4.54747	No
SLV 3	-5065	-6110	160	0.062	600.7	0.958	0.9446	4.66411	No
SLV 4	-5065	-6110	160	0.062	600.7	0.958	0.9446	4.66411	No
SLV 13	-4452	-6352	-138	0.064	538.4	0.954	0.97925	4.66411	No
SLV 14	-4452	-6352	-138	0.064	538.4	0.954	0.97925	4.66411	No
SLV 10	-5805	-8640	-140	0.068	676	0.962	1.0259	4.54747	No
SLV 9	-5805	-8640	-140	0.068	676	0.962	1.0259	4.54747	No
SLV 12	-3302	-3425	94	0.07	421.8	0.943	1.08143	4.54747	No
SLV 11	-3302	-3425	94	0.07	421.8	0.943	1.08143	4.54747	No

Tabella dei coefficienti di sicurezza minimi

Stato limite	Coeff.s.	Comb.	Verifica
PF_SLU	21.5	SLU 39	Si
V_SLU	8.33	SLU 50	Si
PF_SLV	3.049	SLV 11	Si

Stato limite	Coeff.s.	Comb.	Verifica
V_SLV	1.244	SLV 11	Si
PFFP_SLV	12.255	SLV 11	Si
R_SLV	0.187	SLV 7	No

Maschio 205

Verifiche condotte secondo D.M. 17-01-18 (N.T.C.)

Dati geometrici

X ini.	Y ini.	X fin.	Y fin.	Quota i.	Quota.s	l	Sp.	h netta	h ini.	h fin.	a	a.s.,sx	a.s.,dx
-11.003	-4.784	-11.003	-3.509	Z medio 959 cm	L6	1.275	0.28	1.86	1.86	1.86			

Caratteristiche del materiale

(Circolare 7 21-01-19 C8.5.I) Muratura in mattoni pieni e malta di calce LC2_Corti

fb	fk	fvk0	fmedio	τ0	fv0	μ	ϕ	fv,lim	E	G	FC
600000			345000	9000	20000	0.58	0.77	32500	320000000	128000000	1.2

Verifica a pressoflessione nel piano secondo D.M. 17-01-18 NTC §7.8.2.2.1 in combinazioni non sismiche, γM = 3

Comb.	Quota	N	M	σ0	Mu	c.s.	Verifica
SLU 6	9.59	-4824	95.26	13512	2565.01	26.926	Si
SLU 6	11.45	-3459	-2.16	9690	1942.96	900.072	Si
SLU 45	9.59	-5797	110.05	16238	2958.95	26.888	Si
SLU 45	11.45	-4038	-14.93	11310	2216.71	148.52	Si
SLU 48	9.59	-6001	117.44	16811	3036.37	25.856	Si
SLU 48	11.45	-4255	-11.76	11918	2315.48	196.923	Si
SLU 70	9.59	-6377	115.15	17864	3174.04	27.563	Si
SLU 70	11.45	-4536	-2	12706	2440.65	1000	Si
SLU 50	9.59	-5960	113	16694	3020.77	26.732	Si
SLU 50	11.45	-4213	-20.09	11801	2296.72	114.334	Si
SLU 51	9.59	-5945	108.85	16651	3014.99	27.699	Si
SLU 51	11.45	-4203	-23.61	11773	2292.08	97.071	Si
SLU 69	9.59	-6393	119.31	17907	3179.53	26.65	Si
SLU 69	11.45	-4546	1.52	12735	2445.14	1000	Si
SLU 49	9.59	-5986	113.28	16768	3030.62	26.752	Si
SLU 49	11.45	-4244	-15.28	11889	2310.86	151.206	Si
SLU 66	9.59	-6188	111.92	17335	3105.61	27.749	Si
SLU 66	11.45	-4330	-1.65	12127	2349.14	1000	Si
SLU 71	9.59	-6351	114.87	17791	3164.64	27.549	Si
SLU 71	11.45	-4505	-6.81	12618	2426.92	356.449	Si

Verifica a pressoflessione nel piano secondo D.M. 17-01-18 NTC §7.8.2.2.1 in combinazioni sismiche, γM = 2

Comb.	Quota	N	M	σ0	Mu	c.s.	Verifica
SLV 14	9.59	-4274	485.62	11971	2457.58	5.061	Si
SLV 14	11.45	-2649	-213.78	7422	1586.46	7.421	Si
SLV 2	9.59	-5595	-571.81	15673	3109.41	5.438	Si
SLV 2	11.45	-3910	369.76	10954	2269.45	6.138	Si
SLV 5	9.59	-5965	-461.17	16708	3282.52	7.118	Si
SLV 5	11.45	-3838	373.58	10752	2231.61	5.974	Si
SLV 15	9.59	-3561	708.01	9974	2084.62	2.944	Si
SLV 15	11.45	-2333	-392.12	6535	1407.77	3.59	Si
SLV 16	9.59	-3561	708.01	9974	2084.62	2.944	Si
SLV 16	11.45	-2333	-392.12	6535	1407.77	3.59	Si
SLV 13	9.59	-4274	485.62	11971	2457.58	5.061	Si
SLV 13	11.45	-2649	-213.78	7422	1586.46	7.421	Si
SLV 11	9.59	-3191	597.37	8939	1885.55	3.156	Si
SLV 11	11.45	-2405	-395.94	6737	1448.78	3.659	Si
SLV 1	9.59	-5595	-571.81	15673	3109.41	5.438	Si
SLV 1	11.45	-3910	369.76	10954	2269.45	6.138	Si
SLV 12	9.59	-3191	597.37	8939	1885.55	3.156	Si
SLV 12	11.45	-2405	-395.94	6737	1448.78	3.659	Si
SLV 6	9.59	-5965	-461.17	16708	3282.52	7.118	Si
SLV 6	11.45	-3838	373.58	10752	2231.61	5.974	Si

Verifica a taglio nel piano secondo D.M. 17-01-18 (N.T.C.) §7.8.2.2.2 con rottura per scorrimento in combinazioni non sismiche, γM = 3

Comb.	Quota	N	V par	M	σ0	σN	l'	fvd	Vt scorr.	Vt fess.diag.	Vt,lim	c.s.	Verifica
SLU 47	9.59	-5730	349	98.69		16050	1.275	7696	2747			7.86	Si
SLU 47	11.45	-3979	462	-29.13		11146	1.275	7042	2514			5.44	Si
SLU 51	9.59	-5945	364	108.85		16651	1.275	7776	2776			7.62	Si
SLU 51	11.45	-4203	477	-23.61		11773	1.275	7125	2544			5.33	Si
SLU 44	9.59	-5526	337	91.31		15478	1.275	7619	2720			8.08	Si
SLU 44	11.45	-3763	445	-32.3		10539	1.275	6961	2485			5.59	Si
SLU 45	9.59	-5797	351	110.05		16238	1.275	7721	2756			7.86	Si
SLU 45	11.45	-4038	448	-14.93		11310	1.275	7064	2522			5.63	Si
SLU 49	9.59	-5986	359	113.28		16768	1.275	7791	2781			7.74	Si
SLU 49	11.45	-4244	468	-15.28		11889	1.275	7141	2549			5.45	Si
SLU 50	9.59	-5960	368	113		16694	1.275	7781	2778			7.54	Si
SLU 50	11.45	-4213	475	-20.09		11801	1.275	7129	2545			5.36	Si
SLU 46	9.59	-5782	347	105.9		16195	1.275	7715	2754			7.94	Si
SLU 46	11.45	-4028	450	-18.45		11282	1.275	7060	2520			5.59	Si
SLU 72	9.59	-6336	348	110.72		17748	1.275	7922	2828			8.12	Si
SLU 72	11.45	-4494	466	-10.33		12590	1.275	7234	2583			5.54	Si
SLU 71	9.59	-6351	352	114.87		17791	1.275	7928	2830			8.04	Si
SLU 71	11.45	-4505	463	-6.81		12618	1.275	7238	2584			5.58	Si
SLU 48	9.59	-6001	363	117.44		16811	1.275	7797	2784			7.66	Si
SLU 48	11.45	-4255	465	-11.76		11918	1.275	7145	2551			5.48	Si

Verifica a taglio nel piano secondo D.M. 17-01-18 (N.T.C.) §7.8.2.2.2 con rottura per scorrimento in combinazioni sismiche, γM = 2

Comb.	Quota	N	V par	M	σ0	σN	l'	fvd	Vt scorr.	Vt fess.diag.	Vt,lim	c.s.	Verifica
SLV 5	9.59	-5965	-2098	-461.17		16708	1.275	11675	4168			1.99	Si
SLV 5	11.45	-3838	-1578	373.58		10752	1.275	10484	3743			2.37	Si
SLV 11	9.59	-3191	2573	597.37		8939	1.275	10121	3613			1.4	Si
SLV 11	11.45	-2405	2225	-395.94		6737	1.275	9681	3456			1.55	Si
SLV 2	9.59	-5595	-2183	-571.81		15673	1.275	11468	4094			1.88	Si
SLV 2	11.45	-3910	-1900	369.76		10954	1.275	10524	3757			1.98	Si
SLV 15	9.59	-3561	2659	708.01		9974	1.275	10328	3687			1.39	Si
SLV 15	11.45	-2333	2547	-392.12		6535	1.275	9640	3442			1.35	Si
SLV 6	9.59	-5965	-2098	-461.17		16708	1.275	11675	4168			1.99	Si
SLV 6	11.45	-3838	-1578	373.58		10752	1.275	10484	3743			2.37	Si
SLV 12	9.59	-3191	2573	597.37		8939	1.275	10121	3613			1.4	Si
SLV 12	11.45	-2405	2225	-395.94		6737	1.275	9681	3456			1.55	Si
SLV 1	9.59	-5595	-2183	-571.81		15673	1.275	11468	4094			1.88	Si
SLV 1	11.45	-3910	-1900	369.76		10954	1.275	10524	3757			1.98	Si
SLV 14	9.59	-4274	1598	485.62		11971	1.275	10728	3830			2.4	Si
SLV 14	11.45	-2649	1733	-213.78		7422	1.275	9818	3505			2.02	Si
SLV 16	9.59	-3561	2659	708.01		9974	1.275	10328	3687			1.39	Si
SLV 16	11.45	-2333	2547	-392.12		6535	1.275	9640	3442			1.35	Si
SLV 13	9.59	-4274	1598	485.62		11971	1.275	10728	3830			2.4	Si
SLV 13	11.45	-2649	1733	-213.78		7422	1.275	9818	3505			2.02	Si

Verifica a pressoflessione fuori piano D.M. 17-01-18 (N.T.C.)

quota 10.52 Wa 0.05 denominatore 8 γM = 2

Comb.	fd	Sa	σ0	N	M	Mc	Coeff.s.	Verifica
SLV 11	143750	0.47	8072	-2882	45.58	376.8	8.27	Si
SLV 12	143750	0.47	8072	-2882	45.58	376.8	8.27	Si
SLV 15	143750	0.47	8809	-3145	45.58	408.53	8.96	Si
SLV 16	143750	0.47	8809	-3145	45.58	408.53	8.96	Si
SLV 8	143750	0.47	8945	-3193	45.58	414.32	9.09	Si
SLV 7	143750	0.47	8945	-3193	45.58	414.32	9.09	Si
SLV 13	143750	0.47	10313	-3682	45.58	471.93	10.36	Si
SLV 14	143750	0.47	10313	-3682	45.58	471.93	10.36	Si
SLV 4	143750	0.47	11717	-4183	45.58	529.46	11.62	Si
SLV 3	143750	0.47	11717	-4183	45.58	529.46	11.62	Si

Verifica dei meccanismi locali di collasso con analisi cinematica lineare

forza di aggancio al piano = 0 quota mezzeria = 10.52 Wa = 0.05 Ta = 0.0206

Comb.	N top	N base	V orto	α0	M*	e*	a0*	aLim	Verifica
SLV 2	-3910	-5595	-2	0.085	492.2	0.946	1.30167	5.27326	No
SLV 1	-3910	-5595	-2	0.085	492.2	0.946	1.30167	5.27326	No
SLV 4	-3594	-4882	5	0.085	460.1	0.942	1.30739	5.27326	No
SLV 3	-3594	-4882	5	0.085	460.1	0.942	1.30739	5.27326	No
SLV 6	-3838	-5965	-12	0.083	484.8	0.945	1.27066	5.11122	No
SLV 5	-3838	-5965	-12	0.083	484.8	0.945	1.27066	5.11122	No
SLV 10	-3460	-5568	-13	0.083	446.5	0.941	1.28334	5.11122	No
SLV 9	-3460	-5568	-13	0.083	446.5	0.941	1.28334	5.11122	No
SLV 7	-2784	-3588	13	0.085	378.1	0.932	1.32098	5.11122	No
SLV 8	-2784	-3588	13	0.085	378.1	0.932	1.32098	5.11122	No

Tabella dei coefficienti di sicurezza minimi

Stato limite	Coeff.s.	Comb.	Verifica
PF_SLU	25.856	SLU 48	Si
V_SLU	5.328	SLU 51	Si
PF_SLV	2.944	SLV 15	Si
V_SLV	1.351	SLV 15	Si
PFFP_SLV	8.268	SLV 11	Si
R_SLV	0.247	SLV 1	No

Maschio 206

Verifiche condotte secondo D.M. 17-01-18 (N.T.C.)

Dati geometrici

X ini.	Y ini.	X fin.	Y fin.	Quota i.	Quota.s	l	Sp.	h netta	h ini.	h fin.	a	a.s.,sx	a.s.,dx
-11.003	-3.509	-11.003	-3.384	L5	Z medio 959 cm	0.125	0.28	1.693	1.69	1.695			

Caratteristiche del materiale

(Circolare 7 21-01-19 C8.5.I) Muratura in mattoni pieni e malta di calce LC2_Corti

fb	fk	fvk0	fmedio	τ0	fv0	μ	ϕ	fv,lim	E	G	FC
600000			345000	9000	20000	0.58	0.77	32500	320000000	128000000	1.2

Verifica a pressoflessione nel piano secondo D.M. 17-01-18 NTC §7.8.2.2.1 in combinazioni non sismiche, γM = 3

Comb.	Quota	N	M	σ0	Mu	c.s.	Verifica
SLU 57	7.9	-987	131.1	0	0	0	No, e>l/2
SLU 57	9.59	-713	29.42	20402	33.31	1.132	Si
SLU 59	7.9	-978	129.95	0	0	0	No, e>l/2
SLU 59	9.59	-707	29.09	20229	33.12	1.139	Si
SLU 55	7.9	-949	126.13	0	0	0	No, e>l/2
SLU 55	9.59	-685	29.37	19625	32.45	1.105	Si
SLU 56	7.9	-991	131.75	0	0	0	No, e>l/2
SLU 56	9.59	-716	29.41	20503	33.42	1.136	Si
SLU 54	7.9	-961	127.72	0	0	0	No, e>l/2
SLU 54	9.59	-694	29.7	19865	32.72	1.102	Si
SLU 58	7.9	-982	130.59	0	0	0	No, e>l/2

Comb.	Quota	N	M	σ0	Mu	c.s.	Verifica
SLU 58	9.59	-710	29.07	20330	33.23	1.143	Si
SLU 61	7.9	-957	128.63	0	0	0	No, e>l/2
SLU 61	9.59	-716	38.62	20498	33.41	0.865	No, M>Mu
SLU 53	7.9	-965	128.36	0	0	0	No, e>l/2
SLU 53	9.59	-697	29.69	19965	32.83	1.106	Si
SLU 60	7.9	-961	129.28	0	0	0	No, e>l/2
SLU 60	9.59	-719	38.61	20598	33.52	0.868	No, M>Mu
SLU 1	7.9	-677	88.48	0	0	0	No, e>l/2
SLU 1	9.59	-449	8.67	12859	23.59	2.722	Si

Verifica a pressoflessione nel piano secondo D.M. 17-01-18 NTC §7.8.2.2.1 in combinazioni sismiche, γM = 2

Comb.	Quota	N	M	σ0	Mu	c.s.	Verifica
SLV 7	7.9	-650	131.81	0	0	0	No, e>l/2
SLV 7	9.59	-328	9.16	9396	18.89	2.062	Si
SLV 8	7.9	-650	131.81	0	0	0	No, e>l/2
SLV 8	9.59	-328	9.16	9396	18.89	2.062	Si
SLV 3	7.9	-764	127.65	0	0	0	No, e>l/2
SLV 3	9.59	-486	82.58	0	0	0	No, e>l/2
SLV 4	7.9	-764	127.65	0	0	0	No, e>l/2
SLV 4	9.59	-486	82.58	0	0	0	No, e>l/2
SLV 1	7.9	-818	110.02	0	0	0	No, e>l/2
SLV 1	9.59	-595	100.63	0	0	0	No, e>l/2
SLV 5	7.9	-830	73.03	0	0	0	No, e>l/2
SLV 5	9.59	-693	69.32	0	0	0	No, e>l/2
SLV 2	7.9	-818	110.02	0	0	0	No, e>l/2
SLV 2	9.59	-595	100.63	0	0	0	No, e>l/2
SLV 9	7.9	-786	58.96	0	0	0	No, e>l/2
SLV 9	9.59	-667	24.44	19106	35.11	1.437	Si
SLV 10	7.9	-786	58.96	0	0	0	No, e>l/2
SLV 10	9.59	-667	24.44	19106	35.11	1.437	Si
SLV 6	7.9	-830	73.03	0	0	0	No, e>l/2
SLV 6	9.59	-693	69.32	0	0	0	No, e>l/2

Verifica a taglio nel piano secondo D.M. 17-01-18 (N.T.C.) §7.8.2.2.2 con rottura per scorrimento in combinazioni non sismiche, γM = 3

Comb.	Quota	N	V par	M	σ0	σN	I'	fvd	Vt scorr.	Vt fess.diag.	Vt,lim	c.s.	Verifica
SLU 54	7.9	-961	32	127.72		0	0	5556	0			0	No, Vu<V
SLU 54	9.59	-694	-107	29.7		42221	0.0587	10833	178			1.66	Si
SLU 61	7.9	-957	35	128.63		0	0	5556	0			0	No, Vu<V
SLU 61	9.59	-716	-137	38.62		101169	0.0253	10833	77			0.56	No, Vu<V
SLU 56	7.9	-991	33	131.75		0	0	5556	0			0	No, Vu<V
SLU 56	9.59	-716	-107	29.41		40023	0.0639	10833	194			1.82	Si
SLU 57	7.9	-987	33	131.1		0	0	5556	0			0	No, Vu<V
SLU 57	9.59	-713	-107	29.42		40243	0.0632	10833	192			1.79	Si
SLU 55	7.9	-949	32	126.13		0	0	5556	0			0	No, Vu<V
SLU 55	9.59	-685	-106	29.37		41817	0.0585	10833	178			1.67	Si
SLU 1	7.9	-677	22	88.48		0	0	5556	0			0	No, Vu<V
SLU 1	9.59	-449	-35	8.67		12859	0.1247	7270	254			7.32	Si
SLU 58	7.9	-982	34	130.59		0	0	5556	0			0	No, Vu<V
SLU 58	9.59	-710	-105	29.07		39462	0.0643	10817	195			1.85	Si
SLU 53	7.9	-965	33	128.36		0	0	5556	0			0	No, Vu<V
SLU 53	9.59	-697	-107	29.69		41933	0.0594	10833	180			1.69	Si
SLU 59	7.9	-978	33	129.95		0	0	5556	0			0	No, Vu<V
SLU 59	9.59	-707	-106	29.09		39678	0.0636	10833	193			1.83	Si
SLU 60	7.9	-961	36	129.28		0	0	5556	0			0	No, Vu<V
SLU 60	9.59	-719	-136	38.61		98383	0.0261	10833	79			0.58	No, Vu<V

Verifica a taglio nel piano secondo D.M. 17-01-18 (N.T.C.) §7.8.2.2.2 con rottura per scorrimento in combinazioni sismiche, γM = 2

Comb.	Quota	N	V par	M	σ0	σN	I'	fvd	Vt scorr.	Vt fess.diag.	Vt,lim	c.s.	Verifica
SLV 9	7.9	-786	-203	58.96		0	0	8333	0			0	No, Vu<V
SLV 9	9.59	-667	-125	24.44		30852	0.0772	14504	314			2.52	Si
SLV 1	7.9	-818	-360	110.02		0	0	8333	0			0	No, Vu<V
SLV 1	9.59	-595	-944	100.63		0	0	8333	0			0	No, Vu<V
SLV 8	7.9	-650	255	131.81		0	0	8333	0			0	No, Vu<V
SLV 8	9.59	-328	-2	9.16		11341	0.1033	10602	307			202.88	Si
SLV 3	7.9	-764	-170	127.65		0	0	8333	0			0	No, Vu<V
SLV 3	9.59	-486	-765	82.58		0	0	8333	0			0	No, Vu<V
SLV 5	7.9	-830	-378	73.03		0	0	8333	0			0	No, Vu<V
SLV 5	9.59	-693	-600	69.32		0	0	8333	0			0	No, Vu<V
SLV 6	7.9	-830	-378	73.03		0	0	8333	0			0	No, Vu<V
SLV 6	9.59	-693	-600	69.32		0	0	8333	0			0	No, Vu<V
SLV 7	7.9	-650	255	131.81		0	0	8333	0			0	No, Vu<V
SLV 7	9.59	-328	-2	9.16		11341	0.1033	10602	307			202.88	Si
SLV 4	7.9	-764	-170	127.65		0	0	8333	0			0	No, Vu<V
SLV 4	9.59	-486	-765	82.58		0	0	8333	0			0	No, Vu<V
SLV 2	7.9	-818	-360	110.02		0	0	8333	0			0	No, Vu<V
SLV 2	9.59	-595	-944	100.63		0	0	8333	0			0	No, Vu<V
SLV 10	7.9	-786	-203	58.96		0	0	8333	0			0	No, Vu<V
SLV 10	9.59	-667	-125	24.44		30852	0.0772	14504	314			2.52	Si

Verifica a pressoflessione fuori piano D.M. 17-01-18 (N.T.C.)

quota 8.745 Wa 0.05 denominatore 8 γM = 2

Comb.	fd	Sa	σ0	N	M	Mc	Coeff.s.	Verifica
SLV 2	143750	0.43	8529	-298	3.39	38.79	11.43	Si
SLV 1	143750	0.43	8529	-298	3.39	38.79	11.43	Si
SLV 6	143750	0.43	9517	-332	3.39	42.91	12.65	Si
SLV 5	143750	0.43	9517	-332	3.39	42.91	12.65	Si
SLV 3	143750	0.43	12671	-443	3.39	55.53	16.36	Si
SLV 4	143750	0.43	12671	-443	3.39	55.53	16.36	Si
SLV 9	143750	0.43	14506	-507	3.39	62.51	18.42	Si
SLV 10	143750	0.43	14506	-507	3.39	62.51	18.42	Si

Comb.	fd	Sa	σ0	N	M	Mc	Coeff.s.	Verifica
SLV 8	143750	0.43	23324	-815	3.39	92.28	27.19	Si
SLV 7	143750	0.43	23324	-815	3.39	92.28	27.19	Si

Verifica dei meccanismi locali di collasso con analisi cinematica lineare

forza di aggancio al piano = 0 quota mezzeria = 8.745 Wa = 0.05 Ta = 0.0171

Comb.	N top	N base	V orto	α0	M*	e*	a0*	aLim	Verifica
SLV 6	-693	-830	-38	0.038	78.9	0.968	0.56349	4.55077	No
SLV 5	-693	-830	-38	0.038	78.9	0.968	0.56349	4.55077	No
SLV 9	-667	-786	-35	0.04	76.3	0.967	0.60353	4.55077	No
SLV 10	-667	-786	-35	0.04	76.3	0.967	0.60353	4.55077	No
SLV 1	-595	-818	-24	0.052	69	0.964	0.78899	4.66789	No
SLV 2	-595	-818	-24	0.052	69	0.964	0.78899	4.66789	No
SLV 12	-302	-606	15	0.053	39.2	0.94	0.81192	4.55077	No
SLV 11	-302	-606	15	0.053	39.2	0.94	0.81192	4.55077	No
SLV 7	-328	-650	12	0.063	41.8	0.943	0.96409	4.55077	No
SLV 8	-328	-650	12	0.063	41.8	0.943	0.96409	4.55077	No

Tabella dei coefficienti di sicurezza minimi

Stato limite	Coeff.s.	Comb.	Verifica
PF_SLU	0	SLU 1	No
V_SLU	0	SLU 1	No
PF_SLV	0	SLV 1	No
V_SLV	0	SLV 1	No
PFFP_SLV	11.432	SLV 1	Si
R_SLV	0.124	SLV 5	No

Maschio 207

Verifiche condotte secondo D.M. 17-01-18 (N.T.C.)

Dati geometrici

X ini.	Y ini.	X fin.	Y fin.	Quota i.	Quota.s	l	Sp.	h netta	h ini.	h fin.	a	a.s.,sx	a.s.,dx
-11.003	-3.509	-11.003	-3.384	Z medio 959 cm	L6	0.125	0.28	1.857	1.86	1.855			

Caratteristiche del materiale

(Circolare 7 21-01-19 C8.5.I) Muratura in mattoni pieni e malta di calce LC2_Corti

fb	fk	fvk0	fmedio	τ0	fv0	μ	ϕ	fv,lim	E	G	FC
600000			345000	9000	20000	0.58	0.77	32500	320000000	128000000	1.2

Verifica a pressoflessione nel piano secondo D.M. 17-01-18 NTC §7.8.2.2.1 in combinazioni non sismiche, γM = 3

Comb.	Quota	N	M	σ0	Mu	c.s.	Verifica
SLU 53	9.6	-276	-43.91	0	0	0	No, e>l/2
SLU 53	11.45	-681	11.04	19503	32.31	2.926	Si
SLU 54	9.6	-274	-43.97	0	0	0	No, e>l/2
SLU 54	11.45	-676	10.7	19366	32.16	3.005	Si
SLU 57	9.6	-285	-44.36	0	0	0	No, e>l/2
SLU 57	11.45	-713	11.17	20420	33.33	2.985	Si
SLU 59	9.6	-282	-44.01	0	0	0	No, e>l/2
SLU 59	11.45	-702	10.78	20110	32.99	3.059	Si
SLU 1	9.6	-210	-21.23	0	0	0	No, e>l/2
SLU 1	11.45	-475	6.87	13611	24.69	3.594	Si
SLU 60	9.6	-260	-50.83	0	0	0	No, e>l/2
SLU 60	11.45	-648	11.08	18565	31.22	2.818	Si
SLU 58	9.6	-284	-43.95	0	0	0	No, e>l/2
SLU 58	11.45	-707	11.13	20246	33.14	2.979	Si
SLU 61	9.6	-258	-50.9	0	0	0	No, e>l/2
SLU 61	11.45	-644	10.74	18428	31.06	2.892	Si
SLU 55	9.6	-270	-43.66	0	0	0	No, e>l/2
SLU 55	11.45	-662	10.09	18965	31.69	3.141	Si
SLU 56	9.6	-287	-44.3	0	0	0	No, e>l/2
SLU 56	11.45	-718	11.51	20557	33.48	2.909	Si

Verifica a pressoflessione nel piano secondo D.M. 17-01-18 NTC §7.8.2.2.1 in combinazioni sismiche, γM = 2

Comb.	Quota	N	M	σ0	Mu	c.s.	Verifica
SLV 3	9.6	-169	-71.59	0	0	0	No, e>l/2
SLV 3	11.45	-424	30.58	0	0	0	No, e>l/2
SLV 5	9.6	-262	-80.06	0	0	0	No, e>l/2
SLV 5	11.45	-594	49.49	0	0	0	No, e>l/2
SLV 2	9.6	-204	-92.93	0	0	0	No, e>l/2
SLV 2	11.45	-488	49.64	0	0	0	No, e>l/2
SLV 12	9.6	-162	23.46	0	0	0	No, e>l/2
SLV 12	11.45	-409	-33.23	0	0	0	No, e>l/2
SLV 10	9.6	-278	-47.68	0	0	0	No, e>l/2
SLV 10	11.45	-621	30.3	17771	33.08	1.092	Si
SLV 6	9.6	-262	-80.06	0	0	0	No, e>l/2
SLV 6	11.45	-594	49.49	0	0	0	No, e>l/2
SLV 1	9.6	-204	-92.93	0	0	0	No, e>l/2
SLV 1	11.45	-488	49.64	0	0	0	No, e>l/2
SLV 9	9.6	-278	-47.68	0	0	0	No, e>l/2
SLV 9	11.45	-621	30.3	17771	33.08	1.092	Si
SLV 11	9.6	-162	23.46	0	0	0	No, e>l/2
SLV 11	11.45	-409	-33.23	0	0	0	No, e>l/2
SLV 4	9.6	-169	-71.59	0	0	0	No, e>l/2
SLV 4	11.45	-424	30.58	0	0	0	No, e>l/2

Verifica a taglio nel piano secondo D.M. 17-01-18 (N.T.C.) §7.8.2.2.2 con rottura per scorrimento in combinazioni non sismiche, γM = 3

Comb.	Quota	N	V par	M	σ0	σN	l'	fvd	Vt scorr.	Vt fess.diag.	Vt,lim	c.s.	Verifica
SLU 56	9.6	-287	-85	-44.3		0	0	5556	0			0	No, Vu<V
SLU 56	11.45	-718	57	11.51		20557	0.1247	8296	290			5.1	Si
SLU 57	9.6	-285	-86	-44.36		0	0	5556	0			0	No, Vu<V
SLU 57	11.45	-713	57	11.17		20420	0.1247	8278	289			5.05	Si
SLU 58	9.6	-284	-85	-43.95		0	0	5556	0			0	No, Vu<V
SLU 58	11.45	-707	57	11.13		20246	0.1247	8255	288			5.03	Si
SLU 59	9.6	-282	-85	-44.01		0	0	5556	0			0	No, Vu<V
SLU 59	11.45	-702	58	10.78		20110	0.1247	8237	288			4.99	Si
SLU 54	9.6	-274	-86	-43.97		0	0	5556	0			0	No, Vu<V
SLU 54	11.45	-676	53	10.7		19366	0.1247	8138	284			5.34	Si
SLU 53	9.6	-276	-86	-43.91		0	0	5556	0			0	No, Vu<V
SLU 53	11.45	-681	53	11.04		19503	0.1247	8156	285			5.38	Si
SLU 60	9.6	-260	-110	-50.83		0	0	5556	0			0	No, Vu<V
SLU 60	11.45	-648	47	11.08		18565	0.1247	8031	280			6	Si
SLU 61	9.6	-258	-111	-50.9		0	0	5556	0			0	No, Vu<V
SLU 61	11.45	-644	47	10.74		18428	0.1247	8013	280			5.94	Si
SLU 55	9.6	-270	-86	-43.66		0	0	5556	0			0	No, Vu<V
SLU 55	11.45	-662	54	10.09		18965	0.1247	8084	282			5.23	Si
SLU 1	9.6	-210	-28	-21.23		0	0	5556	0			0	No, Vu<V
SLU 1	11.45	-475	42	6.87		13611	0.1247	7370	257			6.11	Si

Verifica a taglio nel piano secondo D.M. 17-01-18 (N.T.C.) §7.8.2.2.2 con rottura per scorrimento in combinazioni sismiche, γM = 2

Comb.	Quota	N	V par	M	σ0	σN	l'	fvd	Vt scorr.	Vt fess.diag.	Vt,lim	c.s.	Verifica
SLV 3	9.6	-169	-59	-71.59		0	0	8333	0			0	No, Vu<V
SLV 3	11.45	-424	-101	30.58		0	0	8333	0			0	No, Vu<V
SLV 9	9.6	-278	-29	-47.68		0	0	8333	0			0	No, Vu<V
SLV 9	11.45	-621	-140	30.3		54535	0.0406	16250	185			1.33	Si
SLV 2	9.6	-204	-47	-92.93		0	0	8333	0			0	No, Vu<V
SLV 2	11.45	-488	-247	49.64		0	0	8333	0			0	No, Vu<V
SLV 10	9.6	-278	-29	-47.68		0	0	8333	0			0	No, Vu<V
SLV 10	11.45	-621	-140	30.3		54535	0.0406	16250	185			1.33	Si
SLV 12	9.6	-162	-68	23.46		0	0	8333	0			0	No, Vu<V
SLV 12	11.45	-409	347	-33.23		0	0	8333	0			0	No, Vu<V
SLV 1	9.6	-204	-47	-92.93		0	0	8333	0			0	No, Vu<V
SLV 1	11.45	-488	-247	49.64		0	0	8333	0			0	No, Vu<V
SLV 11	9.6	-162	-68	23.46		0	0	8333	0			0	No, Vu<V
SLV 11	11.45	-409	347	-33.23		0	0	8333	0			0	No, Vu<V
SLV 6	9.6	-262	-31	-80.06		0	0	8333	0			0	No, Vu<V
SLV 6	11.45	-594	-268	49.49		0	0	8333	0			0	No, Vu<V
SLV 5	9.6	-262	-31	-80.06		0	0	8333	0			0	No, Vu<V
SLV 5	11.45	-594	-268	49.49		0	0	8333	0			0	No, Vu<V
SLV 4	9.6	-169	-59	-71.59		0	0	8333	0			0	No, Vu<V
SLV 4	11.45	-424	-101	30.58		0	0	8333	0			0	No, Vu<V

Verifica a pressoflessione fuori piano D.M. 17-01-18 (N.T.C.)

quota 10.523 Wa 0.05 denominatore 8 γM = 2

Comb.	fd	Sa	σ0	N	M	Mc	Coeff.s.	Verifica
SLV 7	143750	0.47	7285	-254	4.45	33.5	7.53	Si
SLV 8	143750	0.47	7285	-254	4.45	33.5	7.53	Si
SLV 12	143750	0.47	8201	-286	4.45	37.41	8.41	Si
SLV 11	143750	0.47	8201	-286	4.45	37.41	8.41	Si
SLV 3	143750	0.47	8693	-304	4.45	39.48	8.88	Si
SLV 4	143750	0.47	8693	-304	4.45	39.48	8.88	Si
SLV 2	143750	0.47	10815	-378	4.45	48.2	10.84	Si
SLV 1	143750	0.47	10815	-378	4.45	48.2	10.84	Si
SLV 16	143750	0.47	11744	-410	4.45	51.91	11.67	Si
SLV 15	143750	0.47	11744	-410	4.45	51.91	11.67	Si

Verifica dei meccanismi locali di collasso con analisi cinematica lineare

forza di aggancio al piano = 0 quota mezzeria = 10.523 Wa = 0.05 Ta = 0.0206

Comb.	N top	N base	V orto	α0	M*	e*	a0*	aLim	Verifica
SLV 4	-424	-169	-23	0.037	52.4	0.95	0.56415	5.26898	No
SLV 3	-424	-169	-23	0.037	52.4	0.95	0.56415	5.26898	No
SLV 8	-382	-147	-18	0.043	48.1	0.946	0.66776	5.10756	No
SLV 7	-382	-147	-18	0.043	48.1	0.946	0.66776	5.10756	No
SLV 2	-488	-204	-17	0.053	58.8	0.954	0.80554	5.26898	No
SLV 1	-488	-204	-17	0.053	58.8	0.954	0.80554	5.26898	No
SLV 13	-578	-255	17	0.055	68	0.96	0.83331	5.26898	No
SLV 14	-578	-255	17	0.055	68	0.96	0.83331	5.26898	No
SLV 15	-515	-221	11	0.064	61.6	0.956	0.96991	5.26898	No
SLV 16	-515	-221	11	0.064	61.6	0.956	0.96991	5.26898	No

Tabella dei coefficienti di sicurezza minimi

Stato limite	Coeff.s.	Comb.	Verifica
PF_SLU	0	SLU 1	No
V_SLU	0	SLU 1	No
PF_SLV	0	SLV 1	No
V_SLV	0	SLV 1	No
PFFP_SLV	7.533	SLV 7	Si
R_SLV	0.107	SLV 3	No

Maschio 208

Verifiche condotte secondo D.M. 17-01-18 (N.T.C.)

Dati geometrici

X ini.	Y ini.	X fin.	Y fin.	Quota i.	Quota.s	l	Sp.	h netta	h ini.	h fin.	a	a.s.,sx	a.s.,dx
-11.003	-3.384	-11.003	-0.354	L5	Z medio 1052 cm	3.03	0.28	2.623	1.695	3.55			

Caratteristiche del materiale

(Circolare 7 21-01-19 C8.5.I) Muratura in mattoni pieni e malta di calce LC2_Corti

fb	fk	fvk0	fmedio	τ0	fv0	μ	ϕ	fv,lim	E	G	FC
600000			345000	9000	20000	0.58	0.77	32500	320000000	128000000	1.2

Verifica a pressoflessione nel piano secondo D.M. 17-01-18 NTC §7.8.2.2.1 in combinazioni non sismiche, γM = 3

Comb.	Quota	N	M	σ0	Mu	c.s.	Verifica
SLU 78	7.9	-26741	1564.41	31517	24840.32	15.878	Si
SLU 78	9.6	-21736	892.39	25618	22575.74	25.298	Si
SLU 70	7.9	-24714	1536.95	29128	24055.65	15.652	Si
SLU 70	9.6	-20008	1039.19	23582	21539.22	20.727	Si
SLU 28	7.9	-20458	1367.27	24112	21821.69	15.96	Si
SLU 28	9.6	-16635	902.81	19606	19137.94	21.198	Si
SLU 69	7.9	-24826	1554.61	29259	24103.31	15.504	Si
SLU 69	9.6	-20111	1043.84	23703	21604.51	20.697	Si
SLU 35	7.9	-22596	1412.4	26632	23043.12	16.315	Si
SLU 35	9.6	-18465	760.65	21763	20502.67	26.954	Si
SLU 71	7.9	-24517	1488.8	28896	23969.76	16.1	Si
SLU 71	9.6	-19822	990.01	23362	21419.49	21.636	Si
SLU 77	7.9	-26852	1582.08	31648	24878.11	15.725	Si
SLU 77	9.6	-21839	897.04	25739	22633.25	25.231	Si
SLU 66	7.9	-24085	1460.49	28386	23775.23	16.279	Si
SLU 66	9.6	-19400	960.62	22865	21143.21	22.01	Si
SLU 27	7.9	-20569	1384.93	24243	21890.07	15.806	Si
SLU 27	9.6	-16738	907.45	19727	19218.42	21.178	Si
SLU 72	7.9	-24406	1471.14	28765	23920.6	16.26	Si
SLU 72	9.6	-19719	985.36	23241	21352.9	21.67	Si

Verifica a pressoflessione nel piano secondo D.M. 17-01-18 NTC §7.8.2.2.1 in combinazioni sismiche, γM = 2

Comb.	Quota	N	M	σ0	Mu	c.s.	Verifica
SLV 7	7.9	-16498	3837.41	19444	21018.33	5.477	Si
SLV 7	9.6	-13017	-482.66	15341	17245.65	35.731	Si
SLV 15	7.9	-15136	932.1	17839	19584.46	21.011	Si
SLV 15	9.6	-13339	2208.2	15721	17610.04	7.975	Si
SLV 13	7.9	-16313	-654.12	19226	20826.84	31.839	Si
SLV 13	9.6	-14175	2515.48	16707	18540.86	7.371	Si
SLV 3	7.9	-19344	2554.73	22798	23839.6	9.332	Si
SLV 3	9.6	-14344	-1380.05	16906	18726.07	13.569	Si
SLV 4	7.9	-19344	2554.73	22798	23839.6	9.332	Si
SLV 4	9.6	-14344	-1380.05	16906	18726.07	13.569	Si
SLV 8	7.9	-16498	3837.41	19444	21018.33	5.477	Si
SLV 8	9.6	-13017	-482.66	15341	17245.65	35.731	Si
SLV 12	7.9	-15235	3350.62	17956	19691.13	5.877	Si
SLV 12	9.6	-12715	593.82	14986	16902.25	28.464	Si
SLV 14	7.9	-16313	-654.12	19226	20826.84	31.839	Si
SLV 14	9.6	-14175	2515.48	16707	18540.86	7.371	Si
SLV 11	7.9	-15235	3350.62	17956	19691.13	5.877	Si
SLV 11	9.6	-12715	593.82	14986	16902.25	28.464	Si
SLV 16	7.9	-15136	932.1	17839	19584.46	21.011	Si
SLV 16	9.6	-13339	2208.2	15721	17610.04	7.975	Si

Verifica a taglio nel piano secondo D.M. 17-01-18 (N.T.C.) §7.8.2.2.2 con rottura per scorrimento in combinazioni non sismiche, γM = 3

Comb.	Quota	N	V par	M	σ0	σN	l'	fvd	Vt scorr.	Vt fess.diag.	Vt,lim	c.s.	Verifica
SLU 39	7.9	-21675	652	1170.12		25546	3.0303	8962	7604			11.66	Si
SLU 39	9.6	-17495	1029	477.46		20619	3.0303	8305	7046			6.85	Si
SLU 84	7.9	-26561	662	1416.26		31305	3.0303	9730	8255			12.48	Si
SLU 84	9.6	-21476	1073	692.42		25312	3.0303	8930	7577			7.06	Si
SLU 81	7.9	-25932	650	1339.8		30563	3.0303	9631	8171			12.58	Si
SLU 81	9.6	-20868	1056	613.84		24595	3.0303	8835	7496			7.1	Si
SLU 41	7.9	-22416	663	1264.24		26419	3.0303	9078	7703			11.61	Si
SLU 41	9.6	-18206	1052	560.68		21457	3.0303	8416	7141			6.79	Si
SLU 35	7.9	-22596	620	1412.4		26632	3.0303	9106	7727			12.47	Si
SLU 35	9.6	-18465	972	760.65		21763	3.0303	8457	7176			7.38	Si
SLU 42	7.9	-22305	664	1246.58		26288	3.0303	9061	7688			11.58	Si
SLU 42	9.6	-18103	1046	556.03		21336	3.0303	8400	7127			6.81	Si
SLU 82	7.9	-25821	650	1322.14		30432	3.0303	9613	8156			12.54	Si
SLU 82	9.6	-20765	1050	609.2		24474	3.0303	8819	7482			7.12	Si
SLU 36	7.9	-22485	620	1394.74		26501	3.0303	9089	7712			12.43	Si
SLU 36	9.6	-18363	966	756		21642	3.0303	8441	7162			7.41	Si
SLU 83	7.9	-26672	661	1433.92		31436	3.0303	9747	8270			12.51	Si
SLU 83	9.6	-21579	1079	697.07		25433	3.0303	8947	7591			7.03	Si
SLU 40	7.9	-21564	653	1152.46		25415	3.0303	8944	7589			11.63	Si
SLU 40	9.6	-17392	1023	472.81		20498	3.0303	8289	7033			6.87	Si

Verifica a taglio nel piano secondo D.M. 17-01-18 (N.T.C.) §7.8.2.2.2 con rottura per scorrimento in combinazioni sismiche, γM = 2

Comb.	Quota	N	V par	M	σ0	σN	l'	fvd	Vt scorr.	Vt fess.diag.	Vt,lim	c.s.	Verifica
SLV 12	7.9	-15235	7275	3350.62		17956	3.0303	11925	10118			1.39	Si
SLV 12	9.6	-12715	6794	593.82		14986	3.0303	11331	9614			1.41	Si
SLV 13	7.9	-16313	-6711	-654.12		19226	3.0303	12179	10333			1.54	Si
SLV 13	9.6	-14175	-5511	2515.48		16707	3.0303	11675	9906			1.8	Si
SLV 3	7.9	-19344	7364	2554.73		22798	3.0303	12893	10939			1.49	Si
SLV 3	9.6	-14344	6553	-1380.05		16906	3.0303	11714	9939			1.52	Si
SLV 4	7.9	-19344	7364	2554.73		22798	3.0303	12893	10939			1.49	Si
SLV 4	9.6	-14344	6553	-1380.05		16906	3.0303	11714	9939			1.52	Si
SLV 10	7.9	-19159	-9349	-1936.8		22580	3.0303	12849	10902			1.17	Si

Comb.	Quota	N	V par	M	σ0	σN	l'	fvd	Vt scorr.	Vt fess.diag.	Vt,lim	c.s.	Verifica
SLV 10	9.6	-15503	-8037	1618.09		18271	3.0303	11988	10171			1.27	Si
SLV 9	7.9	-19159	-9349	-1936.8		22580	3.0303	12849	10902			1.17	Si
SLV 9	9.6	-15503	-8037	1618.09		18271	3.0303	11988	10171			1.27	Si
SLV 7	7.9	-16498	10002	3837.41		19444	3.0303	12222	10370			1.04	Si
SLV 7	9.6	-13017	9079	-482.66		15341	3.0303	11402	9674			1.07	Si
SLV 14	7.9	-16313	-6711	-654.12		19226	3.0303	12179	10333			1.54	Si
SLV 14	9.6	-14175	-5511	2515.48		16707	3.0303	11675	9906			1.8	Si
SLV 8	7.9	-16498	10002	3837.41		19444	3.0303	12222	10370			1.04	Si
SLV 8	9.6	-13017	9079	-482.66		15341	3.0303	11402	9674			1.07	Si
SLV 11	7.9	-15235	7275	3350.62		17956	3.0303	11925	10118			1.39	Si
SLV 11	9.6	-12715	6794	593.82		14986	3.0303	11331	9614			1.41	Si

Verifica a pressoflessione fuori piano D.M. 17-01-18 (N.T.C.)

quota 8.748 Wa 0.05 denominatore 8 γM = 2

Comb.	fd	Sa	σ0	N	M	Mc	Coeff.s.	Verifica
SLV 11	143750	0.43	15595	-13232	197.94	1616.03	8.16	Si
SLV 12	143750	0.43	15595	-13232	197.94	1616.03	8.16	Si
SLV 8	143750	0.43	16309	-13837	197.94	1678.67	8.48	Si
SLV 7	143750	0.43	16309	-13837	197.94	1678.67	8.48	Si
SLV 15	143750	0.43	16626	-14106	197.94	1706.18	8.62	Si
SLV 16	143750	0.43	16626	-14106	197.94	1706.18	8.62	Si
SLV 14	143750	0.43	18223	-15462	197.94	1841.79	9.31	Si
SLV 13	143750	0.43	18223	-15462	197.94	1841.79	9.31	Si
SLV 3	143750	0.43	19005	-16125	197.94	1906.37	9.63	Si
SLV 4	143750	0.43	19005	-16125	197.94	1906.37	9.63	Si

Verifica dei meccanismi locali di collasso con analisi cinematica lineare

forza di aggancio al piano = 0 quota mezzeria = 8.748 Wa = 0.05 Ta = 0.041

Comb.	N top	N base	V orto	α0	M*	e*	a0*	aLim	Verifica
SLV 2	-15180	-20521	-50	0.057	1860	0.951	0.8668	6.91586	No
SLV 1	-15180	-20521	-50	0.057	1860	0.951	0.8668	6.91586	No
SLV 15	-13339	-15136	30	0.058	1673.1	0.946	0.89701	6.91586	No
SLV 16	-13339	-15136	30	0.058	1673.1	0.946	0.89701	6.91586	No
SLV 5	-15804	-20421	-74	0.055	1923.3	0.952	0.84301	6.46392	No
SLV 6	-15804	-20421	-74	0.055	1923.3	0.952	0.84301	6.46392	No
SLV 3	-14344	-19344	-15	0.059	1775.1	0.949	0.90337	6.91586	No
SLV 4	-14344	-19344	-15	0.059	1775.1	0.949	0.90337	6.91586	No
SLV 14	-14175	-16313	-4	0.06	1757.9	0.949	0.91497	6.91586	No
SLV 13	-14175	-16313	-4	0.06	1757.9	0.949	0.91497	6.91586	No

Tabella dei coefficienti di sicurezza minimi

Stato limite	Coeff.s.	Comb.	Verifica
PF_SLU	15.504	SLU 69	Si
V_SLU	6.79	SLU 41	Si
PF_SLV	5.477	SLV 7	Si
V_SLV	1.037	SLV 7	Si
PFFP_SLV	8.164	SLV 11	Si
R_SLV	0.125	SLV 1	No

Maschio 210

Verifiche condotte secondo D.M. 17-01-18 (N.T.C.)

Dati geometrici

X ini.	Y ini.	X fin.	Y fin.	Quota i.	Quota.s	l	Sp.	h netta	h ini.	h fin.	a	a.s.,sx	a.s.,dx
-11.003	-0.354	-11.003	1.046	L5	L6	1.4	0.28	3.55	3.55	3.55			

Caratteristiche del materiale

(Circolare 7 21-01-19 C8.5.I) Muratura in mattoni pieni e malta di calce LC2_Corti

fb	fk	fvk0	fmedio	τ0	fv0	μ	ϕ	fv,lim	E	G	FC
600000			345000	9000	20000	0.58	0.77	32500	320000000	128000000	1.2

Verifica a pressoflessione nel piano secondo D.M. 17-01-18 NTC §7.8.2.2.1 in combinazioni non sismiche, γM = 3

Comb.	Quota	N	M	σ0	Mu	c.s.	Verifica
SLU 71	7.9	-13508	72.41	34459	5455.65	75.341	Si
SLU 71	11.45	-8645	263.22	22053	4413.06	16.766	Si
SLU 69	7.9	-13748	79.16	35071	5480.24	69.234	Si
SLU 69	11.45	-8848	277.48	22571	4477.37	16.136	Si
SLU 49	7.9	-12338	75.5	31475	5299.6	70.193	Si
SLU 49	11.45	-8043	248.55	20517	4211.83	16.946	Si
SLU 70	7.9	-13665	78.87	34859	5472.01	69.383	Si
SLU 70	11.45	-8803	273.63	22458	4463.48	16.312	Si
SLU 48	7.9	-12421	75.79	31687	5312.66	70.098	Si
SLU 48	11.45	-8087	252.39	20630	4227.2	16.748	Si
SLU 72	7.9	-13425	72.12	34247	5446.55	75.516	Si
SLU 72	11.45	-8600	259.37	21939	4398.77	16.959	Si
SLU 28	7.9	-11427	67.76	29152	5136.54	75.809	Si
SLU 28	11.45	-7396	239.19	18866	3977.95	16.631	Si
SLU 27	7.9	-11510	68.04	29363	5152.92	75.728	Si
SLU 27	11.45	-7440	243.04	18980	3994.58	16.436	Si
SLU 6	7.9	-10184	64.68	25979	4855.2	75.068	Si
SLU 6	11.45	-6679	217.96	17038	3697.44	16.964	Si
SLU 29	7.9	-11271	61.3	28751	5104.79	83.272	Si
SLU 29	11.45	-7237	228.78	18461	3917.73	17.124	Si

Verifica a pressoflessione nel piano secondo D.M. 17-01-18 NTC §7.8.2.2.1 in combinazioni sismiche, γM = 2

Comb.	Quota	N	M	σ0	Mu	c.s.	Verifica
SLV 7	7.9	-10600	817.45	27041	5777.95	7.068	Si
SLV 7	11.45	-4491	-490.48	11458	2849.19	5.809	Si
SLV 14	7.9	-8204	-443.77	20929	4759.26	10.725	Si
SLV 14	11.45	-8273	487.99	21105	4790.93	9.818	Si
SLV 8	7.9	-10600	817.45	27041	5777.95	7.068	Si
SLV 8	11.45	-4491	-490.48	11458	2849.19	5.809	Si
SLV 6	7.9	-9525	-512.07	24297	5341.44	10.431	Si
SLV 6	11.45	-6211	644.3	15844	3783.88	5.873	Si
SLV 10	7.9	-8741	-695.32	22300	5002.3	7.194	Si
SLV 10	11.45	-7440	755.46	18981	4399.27	5.823	Si
SLV 12	7.9	-9817	634.21	25043	5463.43	8.615	Si
SLV 12	11.45	-5721	-379.31	14594	3526.38	9.297	Si
SLV 11	7.9	-9817	634.21	25043	5463.43	8.615	Si
SLV 11	11.45	-5721	-379.31	14594	3526.38	9.297	Si
SLV 5	7.9	-9525	-512.07	24297	5341.44	10.431	Si
SLV 5	11.45	-6211	644.3	15844	3783.88	5.873	Si
SLV 13	7.9	-8204	-443.77	20929	4759.26	10.725	Si
SLV 13	11.45	-8273	487.99	21105	4790.93	9.818	Si
SLV 9	7.9	-8741	-695.32	22300	5002.3	7.194	Si
SLV 9	11.45	-7440	755.46	18981	4399.27	5.823	Si

Verifica a taglio nel piano secondo D.M. 17-01-18 (N.T.C.) §7.8.2.2.2 con rottura per scorrimento in combinazioni non sismiche, γM = 3

Comb.	Quota	N	V par	M	σ0	σN	I'	fvd	Vt scorr.	Vt fess.diag.	Vt,lim	c.s.	Verifica
SLU 83	7.9	-14610	-611	159.99		37271	1.4	10525	4126			6.75	Si
SLU 83	11.45	-9119	-1248	142.46		23263	1.4	8657	3394			2.72	Si
SLU 79	7.9	-14619	-578	139.68		37293	1.4	10528	4127			7.14	Si
SLU 79	11.45	-9297	-1288	199.78		23716	1.4	8718	3417			2.65	Si
SLU 84	7.9	-14527	-597	159.7		37059	1.4	10497	4115			6.89	Si
SLU 84	11.45	-9075	-1231	138.62		23150	1.4	8642	3388			2.75	Si
SLU 74	7.9	-14374	-581	137.9		36669	1.4	10445	4094			7.04	Si
SLU 74	11.45	-9043	-1243	183.91		23068	1.4	8631	3384			2.72	Si
SLU 70	7.9	-13665	-488	78.87		34859	1.4	10203	4000			8.2	Si
SLU 70	11.45	-8803	-1219	273.63		22458	1.4	8550	3352			2.75	Si
SLU 80	7.9	-14536	-564	139.4		37082	1.4	10500	4116			7.29	Si
SLU 80	11.45	-9252	-1271	195.93		23602	1.4	8703	3411			2.68	Si
SLU 69	7.9	-13748	-502	79.16		35071	1.4	10232	4011			8	Si
SLU 69	11.45	-8848	-1236	277.48		22571	1.4	8565	3357			2.72	Si
SLU 78	7.9	-14776	-570	146.14		37694	1.4	10581	4148			7.28	Si
SLU 78	11.45	-9455	-1301	210.19		24121	1.4	8772	3438			2.64	Si
SLU 77	7.9	-14859	-584	146.43		37905	1.4	10610	4159			7.12	Si
SLU 77	11.45	-9500	-1319	214.03		24234	1.4	8787	3444			2.61	Si
SLU 75	7.9	-14291	-567	137.61		36457	1.4	10416	4083			7.2	Si
SLU 75	11.45	-8999	-1226	180.06		22955	1.4	8616	3378			2.75	Si

Verifica a taglio nel piano secondo D.M. 17-01-18 (N.T.C.) §7.8.2.2.2 con rottura per scorrimento in combinazioni sismiche, γM = 2

Comb.	Quota	N	V par	M	σ0	σN	I'	fvd	Vt scorr.	Vt fess.diag.	Vt,lim	c.s.	Verifica
SLV 6	7.9	-9525	-4249	-512.07		24297	1.4	13193	5172			1.22	Si
SLV 6	11.45	-6211	-3412	644.3		15844	1.4	11502	4509			1.32	Si
SLV 11	7.9	-9817	3513	634.21		25043	1.4	13342	5230			1.49	Si
SLV 11	11.45	-5721	1823	-379.31		14594	1.4	11252	4411			2.42	Si
SLV 1	7.9	-10815	-2927	167.05		27588	1.4	13851	5430			1.85	Si
SLV 1	11.45	-4175	-963	117.43		10649	1.4	10463	4102			4.26	Si
SLV 2	7.9	-10815	-2927	167.05		27588	1.4	13851	5430			1.85	Si
SLV 2	11.45	-4175	-963	117.43		10649	1.4	10463	4102			4.26	Si
SLV 10	7.9	-8741	-3329	-695.32		22300	1.4	12793	5015			1.51	Si
SLV 10	11.45	-7440	-3818	755.46		18981	1.4	12129	4755			1.25	Si
SLV 9	7.9	-8741	-3329	-695.32		22300	1.4	12793	5015			1.51	Si
SLV 9	11.45	-7440	-3818	755.46		18981	1.4	12129	4755			1.25	Si
SLV 5	7.9	-9525	-4249	-512.07		24297	1.4	13193	5172			1.22	Si
SLV 5	11.45	-6211	-3412	644.3		15844	1.4	11502	4509			1.32	Si
SLV 7	7.9	-10600	2593	817.45		27041	1.4	13742	5387			2.08	Si
SLV 7	11.45	-4491	2230	-490.48		11458	1.4	10625	4165			1.87	Si
SLV 12	7.9	-9817	3513	634.21		25043	1.4	13342	5230			1.49	Si
SLV 12	11.45	-5721	1823	-379.31		14594	1.4	11252	4411			2.42	Si
SLV 8	7.9	-10600	2593	817.45		27041	1.4	13742	5387			2.08	Si
SLV 8	11.45	-4491	2230	-490.48		11458	1.4	10625	4165			1.87	Si

Verifica a pressoflessione fuori piano D.M. 17-01-18 (N.T.C.)

quota 9.675 Wa 0.05 denominatore 8 γM = 2

Comb.	fd	Sa	σ0	N	M	Mc	Coeff.s.	Verifica
SLV 3	143750	0.45	14976	-5871	175.27	721.17	4.11	Si
SLV 4	143750	0.45	14976	-5871	175.27	721.17	4.11	Si
SLV 1	143750	0.45	16677	-6537	175.27	790.31	4.51	Si
SLV 2	143750	0.45	16677	-6537	175.27	790.31	4.51	Si
SLV 7	143750	0.45	16754	-6568	175.27	793.38	4.53	Si
SLV 8	143750	0.45	16754	-6568	175.27	793.38	4.53	Si
SLV 12	143750	0.45	19978	-7831	175.27	917.12	5.23	Si
SLV 11	143750	0.45	19978	-7831	175.27	917.12	5.23	Si
SLV 6	143750	0.45	22421	-8789	175.27	1004.7	5.73	Si
SLV 5	143750	0.45	22421	-8789	175.27	1004.7	5.73	Si

Verifica dei meccanismi locali di collasso con analisi cinematica lineare

forza di aggancio al piano = 0 quota mezzeria = 9.675 Wa = 0.05 Ta = 0.0752

Comb.	N top	N base	V orto	α0	M*	e*	a0*	aLim	Verifica
SLV 4	-3659	-11137	174	0.014	573.8	0.913	0.22384	12.98863	No
SLV 3	-3659	-11137	174	0.014	573.8	0.913	0.22384	12.98863	No
SLV 14	-8273	-8204	-190	0.025	1039.3	0.946	0.37829	12.98863	No
SLV 13	-8273	-8204	-190	0.025	1039.3	0.946	0.37829	12.98863	No

Comb.	N top	N base	V orto	α0	M*	e*	a0*	aLim	Verifica
SLV 7	-4491	-10600	154	0.021	657.2	0.921	0.33495	11.49604	No
SLV 8	-4491	-10600	154	0.021	657.2	0.921	0.33495	11.49604	No
SLV 10	-7440	-8741	-170	0.026	954.9	0.942	0.39364	11.49604	No
SLV 9	-7440	-8741	-170	0.026	954.9	0.942	0.39364	11.49604	No
SLV 1	-4175	-10815	103	0.03	625.4	0.918	0.4674	12.98863	No
SLV 2	-4175	-10815	103	0.03	625.4	0.918	0.4674	12.98863	No

Tabella dei coefficienti di sicurezza minimi

Stato limite	Coeff.s.	Comb.	Verifica
PF_SLU	16.136	SLU 69	Si
V_SLU	2.612	SLU 77	Si
PF_SLV	5.809	SLV 7	Si
V_SLV	1.217	SLV 5	Si
PFFP_SLV	4.115	SLV 3	Si
R_SLV	0.017	SLV 3	No

Maschio 211

Verifiche condotte secondo D.M. 17-01-18 (N.T.C.)

Dati geometrici

X ini.	Y ini.	X fin.	Y fin.	Quota i.	Quota.s	l	Sp.	h netta	h ini.	h fin.	a	a.s.,sx	a.s.,dx
-9.746	2.215	-9.748	6.536	L5	L6	4.321	0.14	3.55	3.55	3.55			

Caratteristiche del materiale

(Circolare 7 21-01-19 C8.5.I) Muratura in mattoni pieni e malta di calce LC2_Corti

fb	fk	fvk0	fmedio	τ0	fv0	μ	ϕ	fv,lim	E	G	FC
600000			345000	9000	20000	0.58	0.77	32500	320000000	128000000	1.2

Verifica a pressoflessione nel piano secondo D.M. 17-01-18 NTC §7.8.2.2.1 in combinazioni non sismiche, γM = 3

Comb.	Quota	N	M	σ0	Mu	c.s.	Verifica
SLU 8	7.9	-11861	-94.71	19607	19457.11	205.441	Si
SLU 8	11.45	-5211	1021.87	8615	10068.2	9.853	Si
SLU 58	7.9	-16595	-593.83	27433	23778.22	40.042	Si
SLU 58	11.45	-6973	1232.96	11527	12932.77	10.489	Si
SLU 29	7.9	-13986	-552.59	23120	21639.6	39.16	Si
SLU 29	11.45	-5909	1114.28	9769	11235.81	10.083	Si
SLU 16	7.9	-13857	-545.88	22907	21518.51	39.42	Si
SLU 16	11.45	-5717	1134.13	9451	10918.56	9.627	Si
SLU 59	7.9	-16595	-586.72	27433	23778.5	40.528	Si
SLU 59	11.45	-6972	1235.41	11526	12931.63	10.467	Si
SLU 17	7.9	-13857	-538.77	22907	21518.89	39.941	Si
SLU 17	11.45	-5716	1136.58	9450	10917.34	9.605	Si
SLU 38	7.9	-15982	-996.65	26419	23329.48	23.408	Si
SLU 38	11.45	-6414	1228.99	10604	12054.04	9.808	Si
SLU 9	7.9	-11861	-87.6	19608	19457.55	222.116	Si
SLU 9	11.45	-5211	1024.32	8614	10066.95	9.828	Si
SLU 30	7.9	-13986	-545.48	23120	21639.97	39.671	Si
SLU 30	11.45	-5909	1116.73	9767	11234.6	10.06	Si
SLU 37	7.9	-15981	-1003.76	26419	23329.18	23.242	Si
SLU 37	11.45	-6415	1226.54	10605	12055.22	9.829	Si

Verifica a pressoflessione nel piano secondo D.M. 17-01-18 NTC §7.8.2.2.1 in combinazioni sismiche, γM = 2

Comb.	Quota	N	M	σ0	Mu	c.s.	Verifica
SLV 3	7.9	-3264	7738.4	0	0	0	No, e>l/2
SLV 3	11.45	-3537	2773.16	5847	7275.82	2.624	Si
SLV 5	7.9	-15626	-7709.18	25832	26622.88	3.453	Si
SLV 5	11.45	-8584	-359.54	14190	16391.13	45.589	Si
SLV 9	7.9	-20360	-11370.48	33657	31870.52	2.803	Si
SLV 9	11.45	-9031	-1473.52	14930	17127.79	11.624	Si
SLV 6	7.9	-15626	-7709.18	25832	26622.88	3.453	Si
SLV 6	11.45	-8584	-359.54	14190	16391.13	45.589	Si
SLV 7	7.9	-5103	9484.76	8436	10264.33	1.082	Si
SLV 7	11.45	-1623	2460.55	2683	3429.41	1.394	Si
SLV 10	7.9	-20360	-11370.48	33657	31870.52	2.803	Si
SLV 10	11.45	-9031	-1473.52	14930	17127.79	11.624	Si
SLV 4	7.9	-3264	7738.4	0	0	0	No, e>l/2
SLV 4	11.45	-3537	2773.16	5847	7275.82	2.624	Si
SLV 11	7.9	-9837	5823.46	16261	18423.88	3.164	Si
SLV 11	11.45	-2071	1346.57	3423	4348.22	3.229	Si
SLV 12	7.9	-9837	5823.46	16261	18423.88	3.164	Si
SLV 12	11.45	-2071	1346.57	3423	4348.22	3.229	Si
SLV 8	7.9	-5103	9484.76	8436	10264.33	1.082	Si
SLV 8	11.45	-1623	2460.55	2683	3429.41	1.394	Si

Verifica a taglio nel piano secondo D.M. 17-01-18 (N.T.C.) §7.8.2.2.2 con rottura per scorrimento in combinazioni non sismiche, γM = 3

Comb.	Quota	N	V par	M	σ0	σN	l'	fvd	Vt scorr.	Vt fess.diag.	Vt,lim	c.s.	Verifica
SLU 7	7.9	-12260	-49	-181.03		20268	4.3209	8258	4995			102.24	Si
SLU 7	11.45	-5519	-49	971.83		9123	4.3209	6772	4097			83.43	Si
SLU 49	7.9	-14998	-55	-228.98		24794	4.3209	8861	5360			97.69	Si
SLU 49	11.45	-6774	-55	1070.66		11198	4.3209	7049	4264			77.22	Si
SLU 6	7.9	-12260	-51	-188.14		20267	4.3209	8258	4995			98.41	Si
SLU 6	11.45	-5519	-51	969.38		9124	4.3209	6772	4097			80.32	Si
SLU 71	7.9	-16724	-54	-600.54		27646	4.3209	9242	5591			102.69	Si
SLU 71	11.45	-7165	-55	1213.11		11844	4.3209	7135	4316			78.55	Si
SLU 48	7.9	-14998	-57	-236.09		24793	4.3209	8861	5360			94.42	Si
SLU 48	11.45	-6775	-57	1068.21		11200	4.3209	7049	4264			74.65	Si

Comb.	Quota	N	V par	M	σ0	σN	l'	fvd	Vt scorr.	Vt fess.diag.	Vt,lim	c.s.	Verifica
SLU 50	7.9	-14599	-61	-142.66		24133	4.3209	8773	5307			87.11	Si
SLU 50	11.45	-6467	-61	1120.7		10691	4.3209	6981	4223			68.95	Si
SLU 51	7.9	-14599	-59	-135.55		24134	4.3209	8773	5307			89.91	Si
SLU 51	11.45	-6466	-59	1123.15		10689	4.3209	6981	4223			71.16	Si
SLU 72	7.9	-16724	-53	-593.44		27646	4.3209	9242	5591			106.4	Si
SLU 72	11.45	-7164	-53	1215.56		11843	4.3209	7135	4316			81.37	Si
SLU 9	7.9	-11861	-53	-87.6		19608	4.3209	8170	4942			93.22	Si
SLU 9	11.45	-5211	-53	1024.32		8614	4.3209	6704	4055			76.19	Si
SLU 8	7.9	-11861	-55	-94.71		19607	4.3209	8170	4942			90	Si
SLU 8	11.45	-5211	-55	1021.87		8615	4.3209	6704	4056			73.56	Si

Verifica a taglio nel piano secondo D.M. 17-01-18 (N.T.C.) §7.8.2.2.2 con rottura per scorrimento in combinazioni sismiche, γM = 2

Comb.	Quota	N	V par	M	σ0	σN	l'	fvd	Vt scorr.	Vt fess.diag.	Vt,lim	c.s.	Verifica
SLV 9	7.9	-20360	-8037	-11370.48		33657	4.3209	15065	9113			1.13	Si
SLV 9	11.45	-9031	-5804	-1473.52		14930	4.3209	11319	6847			1.18	Si
SLV 8	7.9	-5103	8022	9484.76		40245	0.9058	16250	2061			0.26	No, Vu<V
SLV 8	11.45	-1623	5788	2460.55		5997	1.9332	9533	2580			0.45	No, Vu<V
SLV 7	7.9	-5103	8022	9484.76		40245	0.9058	16250	2061			0.26	No, Vu<V
SLV 7	11.45	-1623	5788	2460.55		5997	1.9332	9533	2580			0.45	No, Vu<V
SLV 10	7.9	-20360	-8037	-11370.48		33657	4.3209	15065	9113			1.13	Si
SLV 10	11.45	-9031	-5804	-1473.52		14930	4.3209	11319	6847			1.18	Si
SLV 12	7.9	-9837	8219	5823.46		16261	4.3209	11586	7008			0.85	No, Vu<V
SLV 12	11.45	-2071	6618	1346.57		3423	4.3209	9018	5455			0.82	No, Vu<V
SLV 11	7.9	-9837	8219	5823.46		16261	4.3209	11586	7008			0.85	No, Vu<V
SLV 11	11.45	-2071	6618	1346.57		3423	4.3209	9018	5455			0.82	No, Vu<V
SLV 6	7.9	-15626	-8234	-7709.18		25832	4.3209	13500	8166			0.99	No, Vu<V
SLV 6	11.45	-8584	-6634	-359.54		14190	4.3209	11171	6758			1.02	Si
SLV 5	7.9	-15626	-8234	-7709.18		25832	4.3209	13500	8166			0.99	No, Vu<V
SLV 5	11.45	-8584	-6634	-359.54		14190	4.3209	11171	6758			1.02	Si
SLV 4	7.9	-3264	2103	7738.4		0	0	8333	0			0	No, Vu<V
SLV 4	11.45	-3537	473	2773.16		6118	4.1292	9557	5525			11.69	Si
SLV 3	7.9	-3264	2103	7738.4		0	0	8333	0			0	No, Vu<V
SLV 3	11.45	-3537	473	2773.16		6118	4.1292	9557	5525			11.69	Si

Verifica a pressoflessione fuori piano D.M. 17-01-18 (N.T.C.)

quota 9.675 Wa 0.03 denominatore 8 γM = 2

Comb.	fd	Sa	σ0	N	M	Mc	Coeff.s.	Verifica
SLV 8	143750	0.45	0	-2915	282.77	0	0	No, e>t/2
SLV 7	143750	0.45	0	-2915	282.77	0	0	No, e>t/2
SLV 12	143750	0.45	7109	-4300	282.77	283.5	1	Si
SLV 11	143750	0.45	7109	-4300	282.77	283.5	1	Si
SLV 4	143750	0.45	7434	-4497	282.77	295.63	1.05	Si
SLV 3	143750	0.45	7434	-4497	282.77	295.63	1.05	Si
SLV 1	143750	0.45	11965	-7238	282.77	457.05	1.62	Si
SLV 2	143750	0.45	11965	-7238	282.77	457.05	1.62	Si
SLV 15	143750	0.45	15067	-9114	282.77	559.33	1.98	Si
SLV 16	143750	0.45	15067	-9114	282.77	559.33	1.98	Si

Verifica dei meccanismi locali di collasso con analisi cinematica lineare

forza di aggancio al piano = 0 quota mezzeria = 9.675 Wa = 0.03 Ta = 0.1503

Comb.	N top	N base	V orto	α0	M*	e*	a0*	aLim	Verifica
SLV 9	-9031	-20360	3	0.023	1225.7	0.932	0.35735	18.76006	No
SLV 10	-9031	-20360	3	0.023	1225.7	0.932	0.35735	18.76006	No
SLV 5	-8584	-15626	5	0.023	1180.5	0.93	0.35779	18.76006	No
SLV 6	-8584	-15626	5	0.023	1180.5	0.93	0.35779	18.76006	No
SLV 14	-7117	-22199	-1	0.024	1032.8	0.923	0.37479	18.76006	No
SLV 13	-7117	-22199	-1	0.024	1032.8	0.923	0.37479	18.76006	No
SLV 1	-5625	-6421	4	0.024	883.4	0.913	0.38499	18.76006	No
SLV 2	-5625	-6421	4	0.024	883.4	0.913	0.38499	18.76006	No
SLV 16	-5029	-19043	-3	0.025	824.1	0.909	0.3955	18.76006	No
SLV 15	-5029	-19043	-3	0.025	824.1	0.909	0.3955	18.76006	No

Tabella dei coefficienti di sicurezza minimi

Stato limite	Coeff.s.	Comb.	Verifica
PF_SLU	9.605	SLU 17	Si
V_SLU	68.95	SLU 50	Si
PF_SLV	0	SLV 3	No
V_SLV	0	SLV 3	No
PFFP_SLV	0	SLV 7	No
R_SLV	0.019	SLV 9	No

Maschio 212

Verifiche condotte secondo D.M. 17-01-18 (N.T.C.)

Dati geometrici

X ini.	Y ini.	X fin.	Y fin.	Quota i.	Quota.s	l	Sp.	h netta	h ini.	h fin.	a	a.s.,sx	a.s.,dx
-9.89	-4.784	-11.003	-4.784	L5	L6	1.113	0.3	3.55	3.55	3.55			

Caratteristiche del materiale

(Circolare 7 21-01-19 C8.5.I) Muratura in mattoni pieni e malta di calce LC2_Corti

fb	fk	fvk0	fmedio	τ0	fv0	μ	ϕ	fv,lim	E	G	FC
600000			345000	9000	20000	0.58	0.77	32500	320000000	128000000	1.2

Verifica a pressoflessione nel piano secondo D.M. 17-01-18 NTC §7.8.2.2.1 in combinazioni non sismiche, γM = 3

Comb.	Quota	N	M	σ0	Mu	c.s.	Verifica
SLU 41	7.9	-5597	280.34	16765	2473	8.821	Si
SLU 41	11.01	-3876	-85.91	11611	1849.28	21.526	Si
SLU 84	7.9	-6931	308.08	20761	2873.37	9.327	Si
SLU 84	11.01	-4669	-95.34	13985	2151.66	22.568	Si
SLU 31	7.9	-5322	255.74	15944	2381.74	9.313	Si
SLU 31	11.01	-3591	-86.26	10757	1734.09	20.104	Si
SLU 39	7.9	-5438	278.41	16289	2420.55	8.694	Si
SLU 39	11.01	-3706	-87.89	11103	1781.15	20.265	Si
SLU 34	7.9	-5481	257.68	16419	2434.94	9.45	Si
SLU 34	11.01	-3761	-84.27	11265	1803.03	21.395	Si
SLU 40	7.9	-5445	279.72	16309	2422.75	8.661	Si
SLU 40	11.01	-3715	-93.55	11129	1784.65	19.076	Si
SLU 81	7.9	-6766	304.83	20266	2827.74	9.276	Si
SLU 81	11.01	-4490	-91.67	13451	2085.81	22.755	Si
SLU 42	7.9	-5603	281.66	16784	2475.16	8.788	Si
SLU 42	11.01	-3885	-91.57	11637	1852.72	20.233	Si
SLU 82	7.9	-6772	306.15	20286	2829.58	9.243	Si
SLU 82	11.01	-4499	-97.33	13477	2089.03	21.464	Si
SLU 83	7.9	-6924	306.77	20742	2871.57	9.361	Si
SLU 83	11.01	-4660	-89.68	13960	2148.5	23.957	Si

Verifica a pressoflessione nel piano secondo D.M. 17-01-18 NTC §7.8.2.2.1 in combinazioni sismiche, γM = 2

Comb.	Quota	N	M	σ0	Mu	c.s.	Verifica
SLV 16	7.9	-1600	-228.8	4791	855.05	3.737	Si
SLV 16	11.01	1244	287.85	0	0	0	No, Trazione
SLV 12	7.9	-826	377.77	2476	450.5	1.193	Si
SLV 12	11.01	-343	8.3	1027	189.16	22.801	Si
SLV 3	7.9	-6173	794.39	18492	2914.92	3.669	Si
SLV 3	11.01	-6547	-409.41	19610	3057.81	7.469	Si
SLV 8	7.9	-2199	684.73	6586	1157.32	1.69	Si
SLV 8	11.01	-2680	-200.88	8028	1393.17	6.935	Si
SLV 4	7.9	-6173	794.39	18492	2914.92	3.669	Si
SLV 4	11.01	-6547	-409.41	19610	3057.81	7.469	Si
SLV 13	7.9	-3634	-441.77	10887	1841.91	4.169	Si
SLV 13	11.01	267	318.29	0	0	0	No, Trazione
SLV 7	7.9	-2199	684.73	6586	1157.32	1.69	Si
SLV 7	11.01	-2680	-200.88	8028	1393.17	6.935	Si
SLV 14	7.9	-3634	-441.77	10887	1841.91	4.169	Si
SLV 14	11.01	267	318.29	0	0	0	No, Trazione
SLV 15	7.9	-1600	-228.8	4791	855.05	3.737	Si
SLV 15	11.01	1244	287.85	0	0	0	No, Trazione
SLV 11	7.9	-826	377.77	2476	450.5	1.193	Si
SLV 11	11.01	-343	8.3	1027	189.16	22.801	Si

Verifica a taglio nel piano secondo D.M. 17-01-18 (N.T.C.) §7.8.2.2.2 con rottura per scorrimento in combinazioni non sismiche, γM = 3

Comb.	Quota	N	V par	M	σ0	σN	I'	fvd	Vt scorr.	Vt fess.diag.	Vt,lim	c.s.	Verifica
SLU 42	7.9	-5603	284	281.66		16784	1.1128	7793	2602			9.15	Si
SLU 42	11.01	-3885	7	-91.57		11637	1.1128	7107	2373			352.42	Si
SLU 80	7.9	-6963	282	285.17		20858	1.1128	8337	2783			9.88	Si
SLU 80	11.01	-4709	3	-82.29		14105	1.1128	7436	2482			824.33	Si
SLU 81	7.9	-6766	290	304.83		20266	1.1128	8258	2757			9.52	Si
SLU 81	11.01	-4490	-19	-91.67		13451	1.1128	7349	2453			130.26	Si
SLU 83	7.9	-6924	296	306.77		20742	1.1128	8321	2778			9.38	Si
SLU 83	11.01	-4660	-13	-89.68		13960	1.1128	7417	2476			185.85	Si
SLU 82	7.9	-6772	294	306.15		20286	1.1128	8260	2758			9.37	Si
SLU 82	11.01	-4499	-7	-97.33		13477	1.1128	7352	2454			359.74	Si
SLU 38	7.9	-5635	265	258.74		16881	1.1128	7806	2606			9.83	Si
SLU 38	11.01	-3925	11	-78.52		11757	1.1128	7123	2378			215.11	Si
SLU 84	7.9	-6931	301	308.08		20761	1.1128	8324	2779			9.24	Si
SLU 84	11.01	-4669	-1	-95.34		13985	1.1128	7420	2477			1000	Si
SLU 41	7.9	-5597	280	280.34		16765	1.1128	7791	2601			9.29	Si
SLU 41	11.01	-3876	-5	-85.91		11611	1.1128	7104	2371			449.21	Si
SLU 39	7.9	-5438	273	278.41		16289	1.1128	7727	2580			9.44	Si
SLU 39	11.01	-3706	-11	-87.89		11103	1.1128	7036	2349			217.66	Si
SLU 40	7.9	-5445	278	279.72		16309	1.1128	7730	2581			9.29	Si
SLU 40	11.01	-3715	1	-93.55		11129	1.1128	7039	2350			1000	Si

Verifica a taglio nel piano secondo D.M. 17-01-18 (N.T.C.) §7.8.2.2.2 con rottura per scorrimento in combinazioni sismiche, γM = 2

Comb.	Quota	N	V par	M	σ0	σN	I'	fvd	Vt scorr.	Vt fess.diag.	Vt,lim	c.s.	Verifica
SLV 8	7.9	-2199	1743	684.73		9973	0.7348	10328	2277			1.31	Si
SLV 8	11.01	-2680	775	-200.88		8028	1.1128	9939	3318			4.28	Si
SLV 15	7.9	-1600	-1879	-228.8		4791	1.1128	9292	3102			1.65	Si
SLV 15	11.01	1244	259	287.85		0	0	8333	0			0	No, Vu<V
SLV 3	7.9	-6173	2734	794.39		18492	1.1128	12032	4017			1.47	Si
SLV 3	11.01	-6547	187	-409.41		19610	1.1128	12255	4091			21.88	Si
SLV 13	7.9	-3634	-2413	-441.77		10887	1.1128	10511	3509			1.45	Si
SLV 13	11.01	267	-223	318.29		0	0	8333	0			0	No, Vu<V
SLV 1	7.9	-8208	2200	581.42		24587	1.1128	13251	4424			2.01	Si
SLV 1	11.01	-7523	-295	-378.98		22537	1.1128	12841	4287			14.51	Si
SLV 14	7.9	-3634	-2413	-441.77		10887	1.1128	10511	3509			1.45	Si
SLV 14	11.01	267	-223	318.29		0	0	8333	0			0	No, Vu<V
SLV 4	7.9	-6173	2734	794.39		18492	1.1128	12032	4017			1.47	Si
SLV 4	11.01	-6547	187	-409.41		19610	1.1128	12255	4091			21.88	Si
SLV 2	7.9	-8208	2200	581.42		24587	1.1128	13251	4424			2.01	Si
SLV 2	11.01	-7523	-295	-378.98		22537	1.1128	12841	4287			14.51	Si
SLV 7	7.9	-2199	1743	684.73		9973	0.7348	10328	2277			1.31	Si
SLV 7	11.01	-2680	775	-200.88		8028	1.1128	9939	3318			4.28	Si
SLV 16	7.9	-1600	-1879	-228.8		4791	1.1128	9292	3102			1.65	Si
SLV 16	11.01	1244	259	287.85		0	0	8333	0			0	No, Vu<V

Verifica a pressoflessione fuori piano D.M. 17-01-18 (N.T.C.)

quota 9.675 Wa 0.05 denominatore 8 γM = 2

Comb.	fd	Sa	σ0	N	M	Mc	Coeff.s.	Verifica
SLV 13	143750	0.45	0	13	142.48	0	0	No, Trazione
SLV 11	143750	0.45	0	-484	142.48	0	0	No, e>t/2
SLV 14	143750	0.45	0	13	142.48	0	0	No, Trazione
SLV 15	143750	0.45	0	1415	142.48	0	0	No, Trazione
SLV 12	143750	0.45	0	-484	142.48	0	0	No, e>t/2
SLV 16	143750	0.45	0	1415	142.48	0	0	No, Trazione
SLV 7	143750	0.45	10529	-3515	142.48	481.82	3.38	Si
SLV 8	143750	0.45	10529	-3515	142.48	481.82	3.38	Si
SLV 10	143750	0.45	15452	-5158	142.48	675.91	4.74	Si
SLV 9	143750	0.45	15452	-5158	142.48	675.91	4.74	Si

Verifica dei meccanismi locali di collasso con analisi cinematica lineare

forza di aggancio al piano = 0 quota mezzeria = 9.675 Wa = 0.05 Ta = 0.0702

Comb.	N top	N base	V orto	α0	M*	e*	a0*	aLim	Verifica
SLV 16	1315	-1600	3	0	0	0	0	11.94331	No, Trazione
SLV 13	825	-3634	21	0	0	0	0	11.94331	No, Trazione
SLV 14	825	-3634	21	0	0	0	0	11.94331	No, Trazione
SLV 15	1315	-1600	3	0	0	0	0	11.94331	No, Trazione
SLV 3	-6212	-6173	-21	0.046	800.6	0.941	0.70315	11.94331	No
SLV 4	-6212	-6173	-21	0.046	800.6	0.941	0.70315	11.94331	No
SLV 2	-6701	-8208	-4	0.048	850.2	0.944	0.7324	11.94331	No
SLV 1	-6701	-8208	-4	0.048	850.2	0.944	0.7324	11.94331	No
SLV 5	-4638	-8981	25	0.046	641.5	0.929	0.71501	10.62261	No
SLV 6	-4638	-8981	25	0.046	641.5	0.929	0.71501	10.62261	No

Tabella dei coefficienti di sicurezza minimi

Stato limite	Coeff.s.	Comb.	Verifica
PF_SLU	8.661	SLU 40	Si
V_SLU	9.152	SLU 42	Si
PF_SLV	0	SLV 16	No
V_SLV	0	SLV 13	No
PFFP_SLV	0	SLV 16	No
R_SLV	0	SLV 16	No

Maschio 213

Verifiche condotte secondo D.M. 17-01-18 (N.T.C.)

Dati geometrici

X ini.	Y ini.	X fin.	Y fin.	Quota i.	Quota.s	l	Sp.	h netta	h ini.	h fin.	a	a.s.,sx	a.s.,dx
-7.723	-4.784	-8.05	-4.784	L5	L6	0.327	0.3	3.55	3.55	3.55			

Caratteristiche del materiale

(Circolare 7 21-01-19 C8.5.I) Muratura in mattoni pieni e malta di calce LC2_Corti

fb	fk	fvk0	fmedio	τ0	fv0	μ	ϕ	fv,lim	E	G	FC
600000			345000	9000	20000	0.58	0.77	32500	320000000	128000000	1.2

Verifica a pressoflessione nel piano secondo D.M. 17-01-18 NTC §7.8.2.2.1 in combinazioni non sismiche, γM = 3

Comb.	Quota	N	M	σ0	Mu	c.s.	Verifica
SLU 43	7.9	-2185	-6.07	22260	259.83	42.808	Si
SLU 43	11.01	-1243	-28.04	12659	171.73	6.125	Si
SLU 48	7.9	-2336	-4.15	23798	270.57	65.193	Si
SLU 48	11.01	-1362	-31.46	13871	184.86	5.876	Si
SLU 44	7.9	-2435	-11.84	24802	277.08	23.411	Si
SLU 44	11.01	-1327	-29.95	13520	181.12	6.048	Si
SLU 9	7.9	-2010	-7.54	20476	246.21	32.664	Si
SLU 9	11.01	-1157	-26.49	11782	161.87	6.11	Si
SLU 49	7.9	-2486	-7.61	25323	280.3	36.834	Si
SLU 49	11.01	-1412	-32.61	14388	190.28	5.836	Si
SLU 46	7.9	-2408	-9.12	24527	275.33	30.196	Si
SLU 46	11.01	-1349	-30.62	13742	183.49	5.993	Si
SLU 51	7.9	-2491	-6.51	25379	280.63	43.091	Si
SLU 51	11.01	-1420	-33.16	14468	191.11	5.763	Si
SLU 45	7.9	-2258	-5.66	23001	265.13	46.853	Si
SLU 45	11.01	-1298	-29.47	13225	177.94	6.037	Si
SLU 50	7.9	-2342	-3.05	23853	270.94	88.74	Si
SLU 50	11.01	-1370	-32.01	13951	185.7	5.801	Si
SLU 47	7.9	-2513	-10.33	25599	281.96	27.302	Si
SLU 47	11.01	-1391	-31.93	14166	187.97	5.886	Si

Verifica a pressoflessione nel piano secondo D.M. 17-01-18 NTC §7.8.2.2.1 in combinazioni sismiche, γM = 2

Comb.	Quota	N	M	σ0	Mu	c.s.	Verifica
SLV 8	7.9	295	98.83	0	0	0	No, Trazione
SLV 8	11.01	-2508	20.35	25547	324.54	15.946	Si
SLV 12	7.9	704	-69.19	0	0	0	No, Trazione
SLV 12	11.01	-2634	41.34	26829	336.31	8.135	Si
SLV 7	7.9	295	98.83	0	0	0	No, Trazione
SLV 7	11.01	-2508	20.35	25547	324.54	15.946	Si
SLV 10	7.9	-3796	-125.65	38668	424.53	3.379	Si
SLV 10	11.01	447	-61.65	0	0	0	No, Trazione
SLV 2	7.9	-3109	258.15	31667	376.82	1.46	Si
SLV 2	11.01	-359	-71.07	0	0	0	No, e>l/2
SLV 9	7.9	-3796	-125.65	38668	424.53	3.379	Si
SLV 9	11.01	447	-61.65	0	0	0	No, Trazione

Comb.	Quota	N	M	σ0	Mu	c.s.	Verifica
SLV 1	7.9	-3109	258.15	31667	376.82	1.46	Si
SLV 1	11.01	-359	-71.07	0	0	0	No, e>l/2
SLV 11	7.9	704	-69.19	0	0	0	No, Trazione
SLV 11	11.01	-2634	41.34	26829	336.31	8.135	Si
SLV 5	7.9	-4206	42.37	42842	446.85	10.546	Si
SLV 5	11.01	573	-82.63	0	0	0	No, Trazione
SLV 6	7.9	-4206	42.37	42842	446.85	10.546	Si
SLV 6	11.01	573	-82.63	0	0	0	No, Trazione

Verifica a taglio nel piano secondo D.M. 17-01-18 (N.T.C.) §7.8.2.2.2 con rottura per scorrimento in combinazioni non sismiche, γM = 3

Comb.	Quota	N	V par	M	σ0	σN	l'	fvd	Vt scorr.	Vt fess.diag.	Vt,lim	c.s.	Verifica
SLU 73	7.9	-2599	-34	-33.94		26470	0.3272	9085	892			26.44	Si
SLU 73	11.01	-1507	-295	-27.4		15350	0.3272	7602	746			2.53	Si
SLU 44	7.9	-2435	-8	-11.84		24802	0.3272	8863	870			104.31	Si
SLU 44	11.01	-1327	-275	-29.95		13520	0.3272	7358	722			2.63	Si
SLU 65	7.9	-2522	-19	-21.03		25689	0.3272	8981	882			46.96	Si
SLU 65	11.01	-1415	-288	-29.21		14414	0.3272	7477	734			2.55	Si
SLU 47	7.9	-2513	-7	-10.33		25599	0.3272	8969	880			125.6	Si
SLU 47	11.01	-1391	-286	-31.93		14166	0.3272	7444	731			2.55	Si
SLU 76	7.9	-2677	-32	-32.43		27267	0.3272	9191	902			27.85	Si
SLU 76	11.01	-1570	-306	-29.38		15996	0.3272	7688	755			2.47	Si
SLU 55	7.9	-2590	-22	-23.24		26380	0.3272	9073	891			40.55	Si
SLU 55	11.01	-1483	-293	-30.12		15102	0.3272	7569	743			2.54	Si
SLU 80	7.9	-2655	-34	-28.62		27046	0.3272	9162	899			26.31	Si
SLU 80	11.01	-1600	-285	-30.61		16298	0.3272	7729	759			2.67	Si
SLU 68	7.9	-2600	-17	-19.52		26486	0.3272	9087	892			51.14	Si
SLU 68	11.01	-1478	-299	-31.2		15060	0.3272	7564	743			2.48	Si
SLU 72	7.9	-2578	-19	-15.71		26265	0.3272	9058	889			46.23	Si
SLU 72	11.01	-1508	-278	-32.42		15362	0.3272	7604	746			2.69	Si
SLU 52	7.9	-2511	-23	-24.74		25583	0.3272	8967	880			37.79	Si
SLU 52	11.01	-1419	-282	-28.13		14456	0.3272	7483	735			2.61	Si

Verifica a taglio nel piano secondo D.M. 17-01-18 (N.T.C.) §7.8.2.2.2 con rottura per scorrimento in combinazioni sismiche, γM = 2

Comb.	Quota	N	V par	M	σ0	σN	l'	fvd	Vt scorr.	Vt fess.diag.	Vt,lim	c.s.	Verifica
SLV 9	7.9	-3796	-31	-125.65		38668	0.3272	16067	1577			51.62	Si
SLV 9	11.01	447	968	-61.65		0	0	8333	0			0	No, Vu<V
SLV 7	7.9	295	-14	98.83		0	0	8333	0			0	No, Vu<V
SLV 7	11.01	-2508	-1284	20.35		25547	0.3272	13443	1320			1.03	Si
SLV 2	7.9	-3109	341	258.15		42870	0.2417	16250	1178			3.46	Si
SLV 2	11.01	-359	-306	-71.07		0	0	8333	0			0	No, Vu<V
SLV 11	7.9	704	-215	-69.19		0	0	8333	0			0	No, Vu<V
SLV 11	11.01	-2634	-1017	41.34		26829	0.3272	13699	1345			1.32	Si
SLV 6	7.9	-4206	171	42.37		42842	0.3272	16250	1595			9.35	Si
SLV 6	11.01	573	701	-82.63		0	0	8333	0			0	No, Vu<V
SLV 5	7.9	-4206	171	42.37		42842	0.3272	16250	1595			9.35	Si
SLV 5	11.01	573	701	-82.63		0	0	8333	0			0	No, Vu<V
SLV 1	7.9	-3109	341	258.15		42870	0.2417	16250	1178			3.46	Si
SLV 1	11.01	-359	-306	-71.07		0	0	8333	0			0	No, Vu<V
SLV 10	7.9	-3796	-31	-125.65		38668	0.3272	16067	1577			51.62	Si
SLV 10	11.01	447	968	-61.65		0	0	8333	0			0	No, Vu<V
SLV 8	7.9	295	-14	98.83		0	0	8333	0			0	No, Vu<V
SLV 8	11.01	-2508	-1284	20.35		25547	0.3272	13443	1320			1.03	Si
SLV 12	7.9	704	-215	-69.19		0	0	8333	0			0	No, Vu<V
SLV 12	11.01	-2634	-1017	41.34		26829	0.3272	13699	1345			1.32	Si

Verifica a pressoflessione fuori piano D.M. 17-01-18 (N.T.C.)

quota 9.675 Wa 0.05 denominatore 8 γM = 2

Comb.	fd	Sa	σ0	N	M	Mc	Coeff.s.	Verifica
SLV 9	143750	0.45	0	543	41.9	0	0	No, Trazione
SLV 6	143750	0.45	0	628	41.9	0	0	No, Trazione
SLV 5	143750	0.45	0	628	41.9	0	0	No, Trazione
SLV 10	143750	0.45	0	543	41.9	0	0	No, Trazione
SLV 2	143750	0.45	7414	-728	41.9	102.54	2.45	Si
SLV 1	143750	0.45	7414	-728	41.9	102.54	2.45	Si
SLV 13	143750	0.45	10294	-1011	41.9	138.81	3.31	Si
SLV 14	143750	0.45	10294	-1011	41.9	138.81	3.31	Si
SLV 4	143750	0.45	20116	-1975	41.9	247.45	5.91	Si
SLV 3	143750	0.45	20116	-1975	41.9	247.45	5.91	Si

Verifica dei meccanismi locali di collasso con analisi cinematica lineare

forza di aggancio al piano = 0 quota mezzeria = 9.675 Wa = 0.05 Ta = 0.0702

Comb.	N top	N base	V orto	α0	M*	e*	a0*	aLim	Verifica
SLV 9	3108	-3796	54	0	0	0	0	10.62261	No, Trazione
SLV 8	-4778	295	-54	0	0	0	0	10.62261	No, Trazione
SLV 7	-4778	295	-54	0	0	0	0	10.62261	No, Trazione
SLV 6	3114	-4206	48	0	0	0	0	10.62261	No, Trazione
SLV 10	3108	-3796	54	0	0	0	0	10.62261	No, Trazione
SLV 12	-4785	704	-49	0	0	0	0	10.62261	No, Trazione
SLV 1	360	-3109	6	0	0	0	0	11.94331	No, Trazione
SLV 5	3114	-4206	48	0	0	0	0	10.62261	No, Trazione
SLV 2	360	-3109	6	0	0	0	0	11.94331	No, Trazione
SLV 11	-4785	704	-49	0	0	0	0	10.62261	No, Trazione

Tabella dei coefficienti di sicurezza minimi

Stato limite	Coeff.s.	Comb.	Verifica
PF_SLU	5.763	SLU 51	Si
V_SLU	2.467	SLU 76	Si
PF_SLV	0	SLV 12	No
V_SLV	0	SLV 1	No

Stato limite	Coeff.s.	Comb.	Verifica
PFFP_SLV	0	SLV 10	No
R_SLV	0	SLV 14	No

Maschio 214

Verifiche condotte secondo D.M. 17-01-18 (N.T.C.)

Dati geometrici

X ini.	Y ini.	X fin.	Y fin.	Quota i.	Quota.s	l	Sp.	h netta	h ini.	h fin.	a	a.s.,sx	a.s.,dx
-9.454	-3.248	-11.003	-3.248	L5	L6	1.549	0.28	3.55	3.55	3.55			

Caratteristiche del materiale

(Circolare 7 21-01-19 C8.5.I) Muratura in mattoni pieni e malta di calce LC2_Corti

fb	fk	fvk0	fmedio	τ0	fv0	μ	ϕ	fv,lim	E	G	FC
600000			345000	9000	20000	0.58	0.77	32500	320000000	128000000	1.2

Verifica a pressoflessione nel piano secondo D.M. 17-01-18 NTC §7.8.2.2.1 in combinazioni non sismiche, γM = 3

Comb.	Quota	N	M	σ0	Mu	c.s.	Verifica
SLU 42	7.9	-8276	531.17	19080	4908.5	9.241	Si
SLU 42	10	-8127	-1004.42	18737	4846.73	4.825	Si
SLU 41	7.9	-8340	530.26	19228	4934.82	9.306	Si
SLU 41	10	-8194	-1018.35	18892	4874.72	4.787	Si
SLU 82	7.9	-9975	490.9	22997	5544.71	11.295	Si
SLU 82	10	-9304	-1063.35	21450	5308.61	4.992	Si
SLU 84	7.9	-10281	494.49	23703	5645.88	11.418	Si
SLU 84	10	-9633	-1089.62	22208	5426.78	4.98	Si
SLU 32	7.9	-8303	458.52	19143	4919.68	10.73	Si
SLU 32	10	-8014	-942.78	18477	4799.39	5.091	Si
SLU 83	7.9	-10345	493.58	23851	5666.56	11.481	Si
SLU 83	10	-9700	-1103.54	22363	5450.33	4.939	Si
SLU 40	7.9	-7970	527.58	18374	4780.42	9.061	Si
SLU 40	10	-7798	-978.15	17979	4706.86	4.812	Si
SLU 39	7.9	-8034	526.67	18522	4807.6	9.128	Si
SLU 39	10	-7865	-992.08	18134	4735.82	4.774	Si
SLU 81	7.9	-10039	489.99	23145	5566.25	11.36	Si
SLU 81	10	-9371	-1077.27	21605	5333.14	4.951	Si
SLU 35	7.9	-8609	462.11	19848	5043.28	10.914	Si
SLU 35	10	-8343	-969.05	19235	4936.14	5.094	Si

Verifica a pressoflessione nel piano secondo D.M. 17-01-18 NTC §7.8.2.2.1 in combinazioni sismiche, γM = 2

Comb.	Quota	N	M	σ0	Mu	c.s.	Verifica
SLV 3	7.9	-3568	3925.87	0	0	0	No, e>l/2
SLV 3	10	-9864	-3319.54	22742	6218.12	1.873	Si
SLV 2	7.9	-5633	3628.35	12988	3899.4	1.075	Si
SLV 2	10	-11304	-3407.99	26062	6887.91	2.021	Si
SLV 1	7.9	-5633	3628.35	12988	3899.4	1.075	Si
SLV 1	10	-11304	-3407.99	26062	6887.91	2.021	Si
SLV 16	7.9	-9083	-3259.68	20940	5829.27	1.788	Si
SLV 16	10	-1507	2209.74	0	0	0	No, e>l/2
SLV 8	7.9	-3089	1758.03	7121	2252.82	1.281	Si
SLV 8	10	-5259	-1281.1	12125	3669.21	2.864	Si
SLV 4	7.9	-3568	3925.87	0	0	0	No, e>l/2
SLV 4	10	-9864	-3319.54	22742	6218.12	1.873	Si
SLV 13	7.9	-11148	-3557.19	25702	6818.29	1.917	Si
SLV 13	10	-2947	2121.3	6794	2155.39	1.016	Si
SLV 15	7.9	-9083	-3259.68	20940	5829.27	1.788	Si
SLV 15	10	-1507	2209.74	0	0	0	No, e>l/2
SLV 7	7.9	-3089	1758.03	7121	2252.82	1.281	Si
SLV 7	10	-5259	-1281.1	12125	3669.21	2.864	Si
SLV 14	7.9	-11148	-3557.19	25702	6818.29	1.917	Si
SLV 14	10	-2947	2121.3	6794	2155.39	1.016	Si

Verifica a taglio nel piano secondo D.M. 17-01-18 (N.T.C.) §7.8.2.2.2 con rottura per scorrimento in combinazioni non sismiche, γM = 3

Comb.	Quota	N	V par	M	σ0	σN	l'	fvd	Vt scorr.	Vt fess.diag.	Vt,lim	c.s.	Verifica
SLU 83	7.9	-10345	1022	493.58		23851	1.5491	8736	3789			3.71	Si
SLU 83	10	-9700	907	-1103.54		22363	1.5491	8537	3703			4.08	Si
SLU 33	7.9	-8239	942	459.43		18995	1.5491	8088	3508			3.72	Si
SLU 33	10	-7947	786	-928.85		18322	1.5491	7999	3469			4.42	Si
SLU 41	7.9	-8340	1019	530.26		19228	1.5491	8119	3522			3.46	Si
SLU 41	10	-8194	916	-1018.35		18892	1.5491	8074	3502			3.82	Si
SLU 40	7.9	-7970	986	527.58		18374	1.5491	8005	3472			3.52	Si
SLU 40	10	-7798	852	-978.15		17979	1.5491	7953	3449			4.05	Si
SLU 84	7.9	-10281	1018	494.49		23703	1.5491	8716	3780			3.71	Si
SLU 84	10	-9633	839	-1089.62		22208	1.5491	8517	3694			4.41	Si
SLU 36	7.9	-8545	971	463.02		19701	1.5491	8182	3549			3.65	Si
SLU 36	10	-8276	780	-955.13		19080	1.5491	8100	3513			4.5	Si
SLU 39	7.9	-8034	989	526.67		18522	1.5491	8025	3481			3.52	Si
SLU 39	10	-7865	921	-992.08		18134	1.5491	7973	3458			3.76	Si
SLU 35	7.9	-8609	975	462.11		19848	1.5491	8202	3558			3.65	Si
SLU 35	10	-8343	849	-969.05		19235	1.5491	8120	3522			4.15	Si
SLU 42	7.9	-8276	1015	531.17		19080	1.5491	8100	3513			3.46	Si
SLU 42	10	-8127	847	-1004.42		18737	1.5491	8054	3493			4.12	Si
SLU 32	7.9	-8303	946	458.52		19143	1.5491	8108	3517			3.72	Si
SLU 32	10	-8014	854	-942.78		18477	1.5491	8019	3478			4.07	Si

Verifica a taglio nel piano secondo D.M. 17-01-18 (N.T.C.) §7.8.2.2.2 con rottura per scorrimento in combinazioni sismiche, γM = 2

Comb.	Quota	N	V par	M	σ0	σN	l'	fvd	Vt scorr.	Vt fess.diag.	Vt,lim	c.s.	Verifica
SLV 8	7.9	-3089	3720	1758.03		17907	0.616	11915	2055			0.55	No, Vu<V
SLV 8	10	-5259	954	-1281.1		12125	1.5491	10758	4666			4.89	Si
SLV 13	7.9	-11148	-5824	-3557.19		29139	1.3664	14161	5418			0.93	No, Vu<V
SLV 13	10	-2947	-4642	2121.3		64207	0.1639	16250	746			0.16	No, Vu<V
SLV 4	7.9	-3568	6834	3925.87		0	0	8333	0			0	No, Vu<V
SLV 4	10	-9864	5535	-3319.54		26810	1.314	13695	5039			0.91	No, Vu<V
SLV 14	7.9	-11148	-5824	-3557.19		29139	1.3664	14161	5418			0.93	No, Vu<V
SLV 14	10	-2947	-4642	2121.3		64207	0.1639	16250	746			0.16	No, Vu<V
SLV 15	7.9	-9083	-4956	-3259.68		26014	1.2469	13536	4726			0.95	No, Vu<V
SLV 15	10	-1507	-5314	2209.74		0	0	8333	0			0	No, Vu<V
SLV 7	7.9	-3089	3720	1758.03		17907	0.616	11915	2055			0.55	No, Vu<V
SLV 7	10	-5259	954	-1281.1		12125	1.5491	10758	4666			4.89	Si
SLV 16	7.9	-9083	-4956	-3259.68		26014	1.2469	13536	4726			0.95	No, Vu<V
SLV 16	10	-1507	-5314	2209.74		0	0	8333	0			0	No, Vu<V
SLV 2	7.9	-5633	5966	3628.35		51411	0.3913	16250	1781			0.3	No, Vu<V
SLV 2	10	-11304	6207	-3407.99		28447	1.4192	14023	5572			0.9	No, Vu<V
SLV 3	7.9	-3568	6834	3925.87		0	0	8333	0			0	No, Vu<V
SLV 3	10	-9864	5535	-3319.54		26810	1.314	13695	5039			0.91	No, Vu<V
SLV 1	7.9	-5633	5966	3628.35		51411	0.3913	16250	1781			0.3	No, Vu<V
SLV 1	10	-11304	6207	-3407.99		28447	1.4192	14023	5572			0.9	No, Vu<V

Verifica a pressoflessione fuori piano D.M. 17-01-18 (N.T.C.)

quota 9.675 Wa 0.05 denominatore 8 γM = 2

Comb.	fd	Sa	σ0	N	M	Mc	Coeff.s.	Verifica
SLV 15	143750	0.45	6393	-2773	189.53	367.88	1.94	Si
SLV 16	143750	0.45	6393	-2773	189.53	367.88	1.94	Si
SLV 12	143750	0.45	7192	-3119	189.53	411	2.17	Si
SLV 11	143750	0.45	7192	-3119	189.53	411	2.17	Si
SLV 13	143750	0.45	9894	-4291	189.53	552.13	2.91	Si
SLV 14	143750	0.45	9894	-4291	189.53	552.13	2.91	Si
SLV 8	143750	0.45	11378	-4935	189.53	626.56	3.31	Si
SLV 7	143750	0.45	11378	-4935	189.53	626.56	3.31	Si
SLV 9	143750	0.45	18862	-8181	189.53	968.55	5.11	Si
SLV 10	143750	0.45	18862	-8181	189.53	968.55	5.11	Si

Verifica dei meccanismi locali di collasso con analisi cinematica lineare

forza di aggancio al piano = 0 quota mezzeria = 9.675 Wa = 0.05 Ta = 0.0752

Comb.	N top	N base	V orto	α0	M*	e*	a0*	aLim	Verifica
SLV 8	-1704	-3089	-185	0	406	0.89	0	11.49604	No
SLV 7	-1704	-3089	-185	0	406	0.89	0	11.49604	No
SLV 12	-2134	-4743	-162	0.009	446.7	0.893	0.14343	11.49604	No
SLV 11	-2134	-4743	-162	0.009	446.7	0.893	0.14343	11.49604	No
SLV 10	-6370	-11627	235	0.016	868.2	0.932	0.25173	11.49604	No
SLV 9	-6370	-11627	235	0.016	868.2	0.932	0.25173	11.49604	No
SLV 5	-5941	-9973	213	0.018	824.8	0.929	0.27911	11.49604	No
SLV 6	-5941	-9973	213	0.018	824.8	0.929	0.27911	11.49604	No
SLV 14	-5389	-11148	122	0.029	769.2	0.925	0.46272	12.98863	No
SLV 13	-5389	-11148	122	0.029	769.2	0.925	0.46272	12.98863	No

Tabella dei coefficienti di sicurezza minimi

Stato limite	Coeff.s.	Comb.	Verifica
PF_SLU	4.774	SLU 39	Si
V_SLU	3.457	SLU 41	Si
PF_SLV	0	SLV 3	No
V_SLV	0	SLV 3	No
PFFP_SLV	1.941	SLV 15	Si
R_SLV	0	SLV 7	No

Maschio 215

Verifiche condotte secondo D.M. 17-01-18 (N.T.C.)

Dati geometrici

X ini.	Y ini.	X fin.	Y fin.	Quota i.	Quota.s	l	Sp.	h netta	h ini.	h fin.	a	a.s.,sx	a.s.,dx
-7.723	-4.784	-7.723	-4.634	L5	L6	0.15	0.3	3.55	3.55	3.55			

Caratteristiche del materiale

(Circolare 7 21-01-19 C8.5.I) Muratura in mattoni pieni e malta di calce LC2_Corti

fb	fk	fvk0	fmedio	τ0	fv0	μ	ϕ	fv,lim	E	G	FC
600000			345000	9000	20000	0.58	0.77	32500	320000000	128000000	1.2

Verifica a pressoflessione nel piano secondo D.M. 17-01-18 NTC §7.8.2.2.1 in combinazioni non sismiche, γM = 3

Comb.	Quota	N	M	σ0	Mu	c.s.	Verifica
SLU 10	7.9	-849	6.91	18866	48.93	7.076	Si
SLU 10	11.45	-270	-22.51	0	0	0	No, e>l/2
SLU 73	7.9	-1151	13.65	25567	59.21	4.338	Si
SLU 73	11.45	-368	-22.93	8174	24.82	1.082	Si
SLU 34	7.9	-958	8.97	21294	53.08	5.916	Si
SLU 34	11.45	-315	-24.03	0	0	0	No, e>l/2
SLU 23	7.9	-833	6.51	18501	48.26	7.415	Si
SLU 23	11.45	-270	-22.53	0	0	0	No, e>l/2
SLU 13	7.9	-879	7.75	19538	50.12	6.465	Si
SLU 13	11.45	-293	-22.61	0	0	0	No, e>l/2
SLU 2	7.9	-753	5.29	16744	44.9	8.489	Si
SLU 2	11.45	-248	-21.11	0	0	0	No, e>l/2

Comb.	Quota	N	M	σ0	Mu	c.s.	Verifica
SLU 52	7.9	-1071	12.43	23810	56.87	4.575	Si
SLU 52	11.45	-346	-21.51	7686	23.49	1.092	Si
SLU 26	7.9	-863	7.35	19172	49.48	6.735	Si
SLU 26	11.45	-294	-22.63	0	0	0	No, e>l/2
SLU 31	7.9	-928	8.13	20623	51.98	6.39	Si
SLU 31	11.45	-292	-23.93	0	0	0	No, e>l/2
SLU 5	7.9	-784	6.13	17416	46.21	7.542	Si
SLU 5	11.45	-272	-21.21	0	0	0	No, e>l/2

Verifica a pressoflessione nel piano secondo D.M. 17-01-18 NTC §7.8.2.2.1 in combinazioni sismiche, γM = 2

Comb.	Quota	N	M	σ0	Mu	c.s.	Verifica
SLV 6	7.9	-548	-65.63	0	0	0	No, e>l/2
SLV 6	11.45	-533	320.57	0	0	0	No, e>l/2
SLV 8	7.9	-600	90.5	0	0	0	No, e>l/2
SLV 8	11.45	225	-333.57	0	0	0	No, Trazione
SLV 10	7.9	-1164	-49.32	25870	68.82	1.396	Si
SLV 10	11.45	-809	335.34	0	0	0	No, e>l/2
SLV 7	7.9	-600	90.5	0	0	0	No, e>l/2
SLV 7	11.45	225	-333.57	0	0	0	No, Trazione
SLV 3	7.9	137	16.82	0	0	0	No, Trazione
SLV 3	11.45	281	-121.85	0	0	0	No, Trazione
SLV 9	7.9	-1164	-49.32	25870	68.82	1.396	Si
SLV 9	11.45	-809	335.34	0	0	0	No, e>l/2
SLV 1	7.9	153	-30.01	0	0	0	No, Trazione
SLV 1	11.45	54	74.39	0	0	0	No, Trazione
SLV 5	7.9	-548	-65.63	0	0	0	No, e>l/2
SLV 5	11.45	-533	320.57	0	0	0	No, e>l/2
SLV 4	7.9	137	16.82	0	0	0	No, Trazione
SLV 4	11.45	281	-121.85	0	0	0	No, Trazione
SLV 2	7.9	153	-30.01	0	0	0	No, Trazione
SLV 2	11.45	54	74.39	0	0	0	No, Trazione

Verifica a taglio nel piano secondo D.M. 17-01-18 (N.T.C.) §7.8.2.2.2 con rottura per scorrimento in combinazioni non sismiche, γM = 3

Comb.	Quota	N	V par	M	σ0	σN	l'	fvd	Vt scorr.	Vt fess.diag.	Vt,lim	c.s.	Verifica
SLU 73	7.9	-1151	-18	13.65		25567	0.15	8964	403			22.31	Si
SLU 73	11.45	-368	122	-22.93		32305	0.038	9863	112			0.92	No, Vu<V
SLU 23	7.9	-833	-21	6.51		18501	0.15	8022	361			17.53	Si
SLU 23	11.45	-270	115	-22.53		0	0	5556	0			0	No, Vu<V
SLU 5	7.9	-784	-22	6.13		17416	0.15	7878	354			16.18	Si
SLU 5	11.45	-272	109	-21.21		0	0	5556	0			0	No, Vu<V
SLU 26	7.9	-863	-21	7.35		19172	0.15	8112	365			17.61	Si
SLU 26	11.45	-294	117	-22.63		0	0	5556	0			0	No, Vu<V
SLU 31	7.9	-928	-18	8.13		20623	0.15	8305	374			20.22	Si
SLU 31	11.45	-292	122	-23.93		0	0	5556	0			0	No, Vu<V
SLU 10	7.9	-849	-20	6.91		18866	0.15	8071	363			18.47	Si
SLU 10	11.45	-270	114	-22.51		0	0	5556	0			0	No, Vu<V
SLU 65	7.9	-1055	-20	12.02		23445	0.15	8682	391			19.35	Si
SLU 65	11.45	-346	114	-21.53		29980	0.0385	9553	110			0.96	No, Vu<V
SLU 13	7.9	-879	-20	7.75		19538	0.15	8161	367			18.54	Si
SLU 13	11.45	-293	116	-22.61		0	0	5556	0			0	No, Vu<V
SLU 2	7.9	-753	-22	5.29		16744	0.15	7788	350			16.1	Si
SLU 2	11.45	-248	106	-21.11		0	0	5556	0			0	No, Vu<V
SLU 34	7.9	-958	-19	8.97		21294	0.15	8395	378			20.29	Si
SLU 34	11.45	-315	125	-24.03		0	0	5556	0			0	No, Vu<V

Verifica a taglio nel piano secondo D.M. 17-01-18 (N.T.C.) §7.8.2.2.2 con rottura per scorrimento in combinazioni sismiche, γM = 2

Comb.	Quota	N	V par	M	σ0	σN	l'	fvd	Vt scorr.	Vt fess.diag.	Vt,lim	c.s.	Verifica
SLV 4	7.9	137	165	16.82		0	0	8333	0			0	No, Vu<V
SLV 4	11.45	281	1007	-121.85		0	0	8333	0			0	No, Vu<V
SLV 2	7.9	153	153	-30.01		0	0	8333	0			0	No, Vu<V
SLV 2	11.45	54	135	74.39		0	0	8333	0			0	No, Vu<V
SLV 10	7.9	-1164	-63	-49.32		39631	0.0979	16250	477			7.53	Si
SLV 10	11.45	-809	-1607	335.34		0	0	8333	0			0	No, Vu<V
SLV 9	7.9	-1164	-63	-49.32		39631	0.0979	16250	477			7.53	Si
SLV 9	11.45	-809	-1607	335.34		0	0	8333	0			0	No, Vu<V
SLV 1	7.9	153	153	-30.01		0	0	8333	0			0	No, Vu<V
SLV 1	11.45	54	135	74.39		0	0	8333	0			0	No, Vu<V
SLV 8	7.9	-600	71	90.5		0	0	8333	0			0	No, Vu<V
SLV 8	11.45	225	1634	-333.57		0	0	8333	0			0	No, Vu<V
SLV 5	7.9	-548	30	-65.63		0	0	8333	0			0	No, Vu<V
SLV 5	11.45	-533	-1273	320.57		0	0	8333	0			0	No, Vu<V
SLV 3	7.9	137	165	16.82		0	0	8333	0			0	No, Vu<V
SLV 3	11.45	281	1007	-121.85		0	0	8333	0			0	No, Vu<V
SLV 6	7.9	-548	30	-65.63		0	0	8333	0			0	No, Vu<V
SLV 6	11.45	-533	-1273	320.57		0	0	8333	0			0	No, Vu<V
SLV 7	7.9	-600	71	90.5		0	0	8333	0			0	No, Vu<V
SLV 7	11.45	225	1634	-333.57		0	0	8333	0			0	No, Vu<V

Verifica a pressoflessione fuori piano D.M. 17-01-18 (N.T.C.)

quota 9.675 Wa 0.05 denominatore 8 γM = 2

Comb.	fd	Sa	σ0	N	M	Mc	Coeff.s.	Verifica
SLV 16	143750	0.45	6618	-298	19.21	42.25	2.2	Si
SLV 15	143750	0.45	6618	-298	19.21	42.25	2.2	Si
SLV 13	143750	0.45	7246	-326	19.21	46.01	2.4	Si
SLV 14	143750	0.45	7246	-326	19.21	46.01	2.4	Si
SLV 12	143750	0.45	11382	-512	19.21	69.67	3.63	Si
SLV 11	143750	0.45	11382	-512	19.21	69.67	3.63	Si
SLV 10	143750	0.45	13476	-606	19.21	80.93	4.21	Si
SLV 9	143750	0.45	13476	-606	19.21	80.93	4.21	Si
SLV 7	143750	0.45	16094	-724	19.21	94.33	4.91	Si

Comb.	fd	Sa	σ0	N	M	Mc	Coeff.s.	Verifica
SLV 8	143750	0.45	16094	-724	19.21	94.33	4.91	Si

Verifica dei meccanismi locali di collasso con analisi cinematica lineare

forza di aggancio al piano = 0 quota mezzeria = 9.675 Wa = 0.05 Ta = 0.0702

Comb.	N top	N base	V orto	α0	M*	e*	a0*	aLim	Verifica
SLV 4	281	137	-2	0	0	0	0	11.94331	No, Trazione
SLV 7	225	-600	1	0	0	0	0	10.62261	No, Trazione
SLV 3	281	137	-2	0	0	0	0	11.94331	No, Trazione
SLV 1	54	153	-3	0	0	0	0	11.94331	No, Trazione
SLV 8	225	-600	1	0	0	0	0	10.62261	No, Trazione
SLV 2	54	153	-3	0	0	0	0	11.94331	No, Trazione
SLV 13	-865	-1901	1	0.048	110.7	0.942	0.73548	11.94331	No
SLV 14	-865	-1901	1	0.048	110.7	0.942	0.73548	11.94331	No
SLV 16	-637	-1916	2	0.047	87.7	0.93	0.74196	11.94331	No
SLV 15	-637	-1916	2	0.047	87.7	0.93	0.74196	11.94331	No

Tabella dei coefficienti di sicurezza minimi

Stato limite	Coeff.s.	Comb.	Verifica
PF_SLU	0	SLU 2	No
V_SLU	0	SLU 2	No
PF_SLV	0	SLV 8	No
V_SLV	0	SLV 1	No
PFFP_SLV	2.2	SLV 15	Si
R_SLV	0	SLV 8	No

Maschio 216

Verifiche condotte secondo D.M. 17-01-18 (N.T.C.)

Dati geometrici

X ini.	Y ini.	X fin.	Y fin.	Quota i.	Quota.s	l	Sp.	h netta	h ini.	h fin.	a	a.s.,sx	a.s.,dx
-7.723	-3.499	-7.723	-3.248	L5	L6	0.251	0.3	3.55	3.55	3.55			

Caratteristiche del materiale

(Circolare 7 21-01-19 C8.5.I) Muratura in mattoni pieni e malta di calce LC2_Corti

fb	fk	fvk0	fmedio	τ0	fv0	μ	ϕ	fv,lim	E	G	FC
600000			345000	9000	20000	0.58	0.77	32500	320000000	128000000	1.2

Verifica a pressoflessione nel piano secondo D.M. 17-01-18 NTC §7.8.2.2.1 in combinazioni non sismiche, γM = 3

Comb.	Quota	N	M	σ0	Mu	c.s.	Verifica
SLU 76	7.9	-2047	-37.36	27163	171.4	4.588	Si
SLU 76	11.01	-804	30.17	10673	87.8	2.91	Si
SLU 23	7.9	-1527	-28.24	20256	144.08	5.103	Si
SLU 23	11.01	-545	23.06	7235	62.41	2.706	Si
SLU 2	7.9	-1369	-22.38	18168	133.64	5.971	Si
SLU 2	11.01	-473	20	6275	54.83	2.741	Si
SLU 26	7.9	-1588	-29.29	21075	147.89	5.049	Si
SLU 26	11.01	-587	24.36	7794	66.72	2.739	Si
SLU 34	7.9	-1735	-35.68	23023	156.35	4.382	Si
SLU 34	11.01	-654	27.4	8679	73.41	2.679	Si
SLU 73	7.9	-1986	-36.3	26345	168.74	4.648	Si
SLU 73	11.01	-762	28.87	10114	83.86	2.905	Si
SLU 31	7.9	-1673	-34.63	22205	152.91	4.415	Si
SLU 31	11.01	-612	26.1	8120	69.21	2.652	Si
SLU 5	7.9	-1431	-23.44	18987	137.85	5.882	Si
SLU 5	11.01	-515	21.3	6834	59.27	2.782	Si
SLU 10	7.9	-1516	-28.78	20117	143.41	4.984	Si
SLU 10	11.01	-540	23.04	7161	61.83	2.684	Si
SLU 13	7.9	-1578	-29.83	20935	147.25	4.937	Si
SLU 13	11.01	-582	24.34	7720	66.16	2.718	Si

Verifica a pressoflessione nel piano secondo D.M. 17-01-18 NTC §7.8.2.2.1 in combinazioni sismiche, γM = 2

Comb.	Quota	N	M	σ0	Mu	c.s.	Verifica
SLV 8	7.9	320	125.4	0	0	0	No, Trazione
SLV 8	11.01	-606	143.52	0	0	0	No, e>l/2
SLV 1	7.9	-1649	-217.24	0	0	0	No, e>l/2
SLV 1	11.01	-995	-38.87	13205	111.5	2.868	Si
SLV 6	7.9	-2853	-244.52	37859	247.36	1.012	Si
SLV 6	11.01	-843	-122.62	0	0	0	No, e>l/2
SLV 4	7.9	-697	-106.26	0	0	0	No, e>l/2
SLV 4	11.01	-924	40.97	12260	104.42	2.549	Si
SLV 9	7.9	-2934	-156.92	38927	251.11	1.6	Si
SLV 9	11.01	-641	-114.56	0	0	0	No, e>l/2
SLV 7	7.9	320	125.4	0	0	0	No, Trazione
SLV 7	11.01	-606	143.52	0	0	0	No, e>l/2
SLV 5	7.9	-2853	-244.52	37859	247.36	1.012	Si
SLV 5	11.01	-843	-122.62	0	0	0	No, e>l/2
SLV 3	7.9	-697	-106.26	0	0	0	No, e>l/2
SLV 3	11.01	-924	40.97	12260	104.42	2.549	Si
SLV 2	7.9	-1649	-217.24	0	0	0	No, e>l/2
SLV 2	11.01	-995	-38.87	13205	111.5	2.868	Si
SLV 10	7.9	-2934	-156.92	38927	251.11	1.6	Si
SLV 10	11.01	-641	-114.56	0	0	0	No, e>l/2

Verifica a taglio nel piano secondo D.M. 17-01-18 (N.T.C.) §7.8.2.2.2 con rottura per scorrimento in combinazioni non sismiche, γM = 3

Comb.	Quota	N	V par	M	σ0	σN	I'	fvd	Vt scorr.	Vt fess.diag.	Vt,lim	c.s.	Verifica
SLU 79	7.9	-1959	-12	-28.29		25999	0.2512	9022	680			55.21	Si
SLU 79	11.01	-957	-108	24.21		12698	0.2512	7249	546			5.06	Si
SLU 71	7.9	-1813	-5	-21.9		24050	0.2512	8762	660			123.79	Si
SLU 71	11.01	-890	-103	21.17		11812	0.2512	7131	537			5.22	Si
SLU 74	7.9	-1931	-13	-28.58		25618	0.2512	8971	676			51.4	Si
SLU 74	11.01	-934	-102	23.73		12388	0.2512	7207	543			5.33	Si
SLU 56	7.9	-1835	-7	-23.78		24348	0.2512	8802	663			96	Si
SLU 56	11.01	-903	-103	21.97		11988	0.2512	7154	539			5.23	Si
SLU 69	7.9	-1846	-7	-23.24		24488	0.2512	8821	665			98.96	Si
SLU 69	11.01	-909	-104	22		12062	0.2512	7164	540			5.2	Si
SLU 83	7.9	-1961	-15	-29.98		26015	0.2512	9024	680			46.07	Si
SLU 83	11.01	-943	-103	24.21		12519	0.2512	7225	545			5.28	Si
SLU 48	7.9	-1688	0	-17.38		22400	0.2512	8542	644			1000	Si
SLU 48	11.01	-837	-98	18.94		11102	0.2512	7036	530			5.41	Si
SLU 50	7.9	-1655	1	-16.04		21962	0.2512	8484	639			439.78	Si
SLU 50	11.01	-818	-97	18.11		10853	0.2512	7003	528			5.44	Si
SLU 58	7.9	-1802	-6	-22.44		23911	0.2512	8744	659			119.22	Si
SLU 58	11.01	-885	-102	21.15		11739	0.2512	7121	537			5.25	Si
SLU 77	7.9	-1992	-14	-29.63		26436	0.2512	9080	684			49.96	Si
SLU 77	11.01	-976	-109	25.03		12947	0.2512	7282	549			5.04	Si

Verifica a taglio nel piano secondo D.M. 17-01-18 (N.T.C.) §7.8.2.2.2 con rottura per scorrimento in combinazioni sismiche, γM = 2

Comb.	Quota	N	V par	M	σ0	σN	I'	fvd	Vt scorr.	Vt fess.diag.	Vt,lim	c.s.	Verifica
SLV 8	7.9	320	-647	125.4		0	0	8333	0			0	No, Vu<V
SLV 8	11.01	-606	-462	143.52		0	0	8333	0			0	No, Vu<V
SLV 9	7.9	-2934	640	-156.92		45198	0.2164	16250	1055			1.65	Si
SLV 9	11.01	-641	325	-114.56		0	0	8333	0			0	No, Vu<V
SLV 2	7.9	-1649	-3325	-217.24		0	0	8333	0			0	No, Vu<V
SLV 2	11.01	-995	-290	-38.87		13205	0.2512	10974	827			2.86	Si
SLV 10	7.9	-2934	640	-156.92		45198	0.2164	16250	1055			1.65	Si
SLV 10	11.01	-641	325	-114.56		0	0	8333	0			0	No, Vu<V
SLV 7	7.9	320	-647	125.4		0	0	8333	0			0	No, Vu<V
SLV 7	11.01	-606	-462	143.52		0	0	8333	0			0	No, Vu<V
SLV 3	7.9	-697	-3130	-106.26		0	0	8333	0			0	No, Vu<V
SLV 3	11.01	-924	-470	40.97		12633	0.2438	10860	794			1.69	Si
SLV 1	7.9	-1649	-3325	-217.24		0	0	8333	0			0	No, Vu<V
SLV 1	11.01	-995	-290	-38.87		13205	0.2512	10974	827			2.86	Si
SLV 6	7.9	-2853	-1295	-244.52		79427	0.1197	16250	584			0.45	No, Vu<V
SLV 6	11.01	-843	138	-122.62		0	0	8333	0			0	No, Vu<V
SLV 5	7.9	-2853	-1295	-244.52		79427	0.1197	16250	584			0.45	No, Vu<V
SLV 5	11.01	-843	138	-122.62		0	0	8333	0			0	No, Vu<V
SLV 4	7.9	-697	-3130	-106.26		0	0	8333	0			0	No, Vu<V
SLV 4	11.01	-924	-470	40.97		12633	0.2438	10860	794			1.69	Si

Verifica a pressoflessione fuori piano D.M. 17-01-18 (N.T.C.)

quota 9.675 Wa 0.05 denominatore 8 γM = 2

Comb.	fd	Sa	σ0	N	M	Mc	Coeff.s.	Verifica
SLV 5	143750	0.45	5648	-426	32.17	60.9	1.89	Si
SLV 6	143750	0.45	5648	-426	32.17	60.9	1.89	Si
SLV 9	143750	0.45	7779	-586	32.17	82.34	2.56	Si
SLV 10	143750	0.45	7779	-586	32.17	82.34	2.56	Si
SLV 1	143750	0.45	9900	-746	32.17	102.85	3.2	Si
SLV 2	143750	0.45	9900	-746	32.17	102.85	3.2	Si
SLV 3	143750	0.45	15676	-1181	32.17	154.48	4.8	Si
SLV 4	143750	0.45	15676	-1181	32.17	154.48	4.8	Si
SLV 14	143750	0.45	17005	-1282	32.17	165.48	5.14	Si
SLV 13	143750	0.45	17005	-1282	32.17	165.48	5.14	Si

Verifica dei meccanismi locali di collasso con analisi cinematica lineare

forza di aggancio al piano = 0 quota mezzeria = 9.675 Wa = 0.05 Ta = 0.0702

Comb.	N top	N base	V orto	α0	M*	e*	a0*	aLim	Verifica
SLV 14	104	-1917	3	0	0	0	0	11.94331	No, Trazione
SLV 7	-679	320	-6	0	0	0	0	10.62261	No, Trazione
SLV 8	-679	320	-6	0	0	0	0	10.62261	No, Trazione
SLV 12	-501	240	-7	0	0	0	0	10.62261	No, Trazione
SLV 10	111	-2934	11	0	0	0	0	10.62261	No, Trazione
SLV 13	104	-1917	3	0	0	0	0	11.94331	No, Trazione
SLV 9	111	-2934	11	0	0	0	0	10.62261	No, Trazione
SLV 11	-501	240	-7	0	0	0	0	10.62261	No, Trazione
SLV 5	-67	-2853	12	0.036	51.5	0.922	0.56841	10.62261	No
SLV 6	-67	-2853	12	0.036	51.5	0.922	0.56841	10.62261	No

Tabella dei coefficienti di sicurezza minimi

Stato limite	Coeff.s.	Comb.	Verifica
PF_SLU	2.652	SLU 31	Si
V_SLU	5.036	SLU 77	Si
PF_SLV	0	SLV 12	No
V_SLV	0	SLV 1	No
PFFP_SLV	1.893	SLV 5	Si
R_SLV	0	SLV 14	No

Maschio 217

Verifiche condotte secondo D.M. 17-01-18 (N.T.C.)

Dati geometrici

X ini.	Y ini.	X fin.	Y fin.	Quota i.	Quota.s	l	Sp.	h netta	h ini.	h fin.	a	a.s.,sx	a.s.,dx
-6.268	-3.248	-6.268	1.046	L5	L6	4.294	0.14	3.55	3.55	3.55			

Caratteristiche del materiale

(Circolare 7 21-01-19 C8.5.I) Muratura in mattoni pieni e malta di calce LC2_Corti

fb	fk	fvk0	fmedio	τ0	fv0	μ	ϕ	fv,lim	E	G	FC
600000			345000	9000	20000	0.58	0.77	32500	320000000	128000000	1.2

Verifica a pressoflessione nel piano secondo D.M. 17-01-18 NTC §7.8.2.2.1 in combinazioni non sismiche, γM = 3

Comb.	Quota	N	M	σ0	Mu	c.s.	Verifica
SLU 27	7.9	-16099	1621.31	26781	23199.33	14.309	Si
SLU 27	11.45	-7242	3727.24	12047	13247.59	3.554	Si
SLU 29	7.9	-15765	1545.36	26226	22949.39	14.85	Si
SLU 29	11.45	-6995	3612.71	11636	12871.68	3.563	Si
SLU 79	7.9	-20753	1939	34524	25671.66	13.24	Si
SLU 79	11.45	-9101	4443.92	15139	15906.75	3.579	Si
SLU 16	7.9	-15683	1471.57	26089	22885.83	15.552	Si
SLU 16	11.45	-6859	3508.96	11410	12662.76	3.609	Si
SLU 14	7.9	-16016	1547.52	26643	23138.18	14.952	Si
SLU 14	11.45	-7106	3623.48	11821	13041.61	3.599	Si
SLU 77	7.9	-21087	2014.94	35079	25775.81	12.792	Si
SLU 77	11.45	-9347	4558.44	15550	16237.08	3.562	Si
SLU 69	7.9	-19336	1845.42	32166	25120.03	13.612	Si
SLU 69	11.45	-8758	4256.42	14569	15439.27	3.627	Si
SLU 71	7.9	-19003	1769.47	31612	24964.71	14.109	Si
SLU 71	11.45	-8511	4141.9	14158	15096.18	3.645	Si
SLU 35	7.9	-17849	1790.84	29693	24352.07	13.598	Si
SLU 35	11.45	-7831	4029.26	13027	14123.8	3.505	Si
SLU 37	7.9	-17516	1714.89	29139	24153.3	14.084	Si
SLU 37	11.45	-7584	3914.73	12617	13760.65	3.515	Si

Verifica a pressoflessione nel piano secondo D.M. 17-01-18 NTC §7.8.2.2.1 in combinazioni sismiche, γM = 2

Comb.	Quota	N	M	σ0	Mu	c.s.	Verifica
SLV 16	7.9	-15966	2101.23	26560	26826.19	12.767	Si
SLV 16	11.45	-6857	2549.18	11407	13346.76	5.236	Si
SLV 15	7.9	-15966	2101.23	26560	26826.19	12.767	Si
SLV 15	11.45	-6857	2549.18	11407	13346.76	5.236	Si
SLV 12	7.9	-13289	4410.03	22107	23368.38	5.299	Si
SLV 12	11.45	-4657	4214.99	7747	9364.32	2.222	Si
SLV 4	7.9	-11039	2149.4	18364	20137.42	9.369	Si
SLV 4	11.45	-4487	3464.04	7463	9043.71	2.611	Si
SLV 11	7.9	-13289	4410.03	22107	23368.38	5.299	Si
SLV 11	11.45	-4657	4214.99	7747	9364.32	2.222	Si
SLV 2	7.9	-11855	184.87	19721	21343.61	115.45	Si
SLV 2	11.45	-5661	2310.66	9417	11216.78	4.854	Si
SLV 1	7.9	-11855	184.87	19721	21343.61	115.45	Si
SLV 1	11.45	-5661	2310.66	9417	11216.78	4.854	Si
SLV 3	7.9	-11039	2149.4	18364	20137.42	9.369	Si
SLV 3	11.45	-4487	3464.04	7463	9043.71	2.611	Si
SLV 8	7.9	-11811	4424.48	19648	21279.47	4.809	Si
SLV 8	11.45	-3946	4489.44	6564	8016.44	1.786	Si
SLV 7	7.9	-11811	4424.48	19648	21279.47	4.809	Si
SLV 7	11.45	-3946	4489.44	6564	8016.44	1.786	Si

Verifica a taglio nel piano secondo D.M. 17-01-18 (N.T.C.) §7.8.2.2.2 con rottura per scorrimento in combinazioni non sismiche, γM = 3

Comb.	Quota	N	V par	M	σ0	σN	l'	fvd	Vt scorr.	Vt fess.diag.	Vt,lim	c.s.	Verifica
SLU 23	7.9	-14677	-1390	1170.04		24415	4.2938	8811	5297			3.81	Si
SLU 23	11.45	-7046	-778	2379.31		11721	4.2938	7118	4279			5.5	Si
SLU 5	7.9	-13366	-1382	1065.19		22235	4.2938	8520	5122			3.71	Si
SLU 5	11.45	-6514	-769	2463.16		10836	4.2938	7000	4208			5.48	Si
SLU 26	7.9	-15200	-1408	1308.51		25285	4.2938	8927	5366			3.81	Si
SLU 26	11.45	-7239	-792	2868.94		12042	4.2938	7161	4305			5.43	Si
SLU 44	7.9	-16081	-1394	1150.82		26751	4.2938	9122	5484			3.93	Si
SLU 44	11.45	-7837	-783	2502.73		13037	4.2938	7294	4385			5.6	Si
SLU 13	7.9	-15117	-1405	1234.72		25148	4.2938	8909	5355			3.81	Si
SLU 13	11.45	-7103	-791	2765.18		11817	4.2938	7131	4287			5.42	Si
SLU 10	7.9	-14594	-1388	1096.24		24278	4.2938	8793	5285			3.81	Si
SLU 10	11.45	-6910	-776	2275.56		11496	4.2938	7088	4261			5.49	Si
SLU 2	7.9	-12843	-1365	926.72		21366	4.2938	8404	5052			3.7	Si
SLU 2	11.45	-6321	-754	1973.54		10515	4.2938	6958	4182			5.55	Si
SLU 31	7.9	-16427	-1414	1339.57		27328	4.2938	9199	5530			3.91	Si
SLU 31	11.45	-7636	-800	2681.33		12702	4.2938	7249	4358			5.45	Si
SLU 47	7.9	-16604	-1412	1289.29		27621	4.2938	9238	5553			3.93	Si
SLU 47	11.45	-8030	-797	2992.35		13358	4.2938	7337	4410			5.53	Si
SLU 34	7.9	-16950	-1431	1478.04		28197	4.2938	9315	5600			3.91	Si
SLU 34	11.45	-7829	-814	3170.96		13023	4.2938	7292	4383			5.38	Si

Verifica a taglio nel piano secondo D.M. 17-01-18 (N.T.C.) §7.8.2.2.2 con rottura per scorrimento in combinazioni sismiche, γM = 2

Comb.	Quota	N	V par	M	σ0	σN	l'	fvd	Vt scorr.	Vt fess.diag.	Vt,lim	c.s.	Verifica
SLV 10	7.9	-16010	-10597	-2138.38		26633	4.2938	13660	8211			0.77	No, Vu<V
SLV 10	11.45	-8572	-8328	370.39		14260	4.2938	11185	6724			0.81	No, Vu<V
SLV 5	7.9	-14532	-9508	-2123.93		24174	4.2938	13168	7916			0.83	No, Vu<V
SLV 5	11.45	-7861	-7604	644.85		13077	4.2938	10949	6582			0.87	No, Vu<V
SLV 12	7.9	-13289	9222	4410.03		22107	4.2938	12755	7667			0.83	No, Vu<V
SLV 12	11.45	-4657	7333	4214.99		8929	3.7255	10119	5278			0.72	No, Vu<V
SLV 4	7.9	-11039	4645	2149.4		18364	4.2938	12006	7217			1.55	Si
SLV 4	11.45	-4487	3420	3464.04		7770	4.1244	9887	5709			1.67	Si
SLV 8	7.9	-11811	10311	4424.48		19648	4.2938	12263	7372			0.71	No, Vu<V
SLV 8	11.45	-3946	8057	4489.44		9310	3.0275	10195	4321			0.54	No, Vu<V

Comb.	Quota	N	V par	M	σ0	σN	l'	fvd	Vt scorr.	Vt fess.diag.	Vt,lim	c.s.	Verifica
SLV 3	7.9	-11039	4645	2149.4		18364	4.2938	12006	7217			1.55	Si
SLV 3	11.45	-4487	3420	3464.04		7770	4.1244	9887	5709			1.67	Si
SLV 11	7.9	-13289	9222	4410.03		22107	4.2938	12755	7667			0.83	No, Vu<V
SLV 11	11.45	-4657	7333	4214.99		8929	3.7255	10119	5278			0.72	No, Vu<V
SLV 7	7.9	-11811	10311	4424.48		19648	4.2938	12263	7372			0.71	No, Vu<V
SLV 7	11.45	-3946	8057	4489.44		9310	3.0275	10195	4321			0.54	No, Vu<V
SLV 6	7.9	-14532	-9508	-2123.93		24174	4.2938	13168	7916			0.83	No, Vu<V
SLV 6	11.45	-7861	-7604	644.85		13077	4.2938	10949	6582			0.87	No, Vu<V
SLV 9	7.9	-16010	-10597	-2138.38		26633	4.2938	13660	8211			0.77	No, Vu<V
SLV 9	11.45	-8572	-8328	370.39		14260	4.2938	11185	6724			0.81	No, Vu<V

Verifica a pressoflessione fuori piano D.M. 17-01-18 (N.T.C.)

quota 9.675 Wa 0.03 denominatore 8 γM = 2

Comb.	fd	Sa	σ0	N	M	Mc	Coeff.s.	Verifica
SLV 3	143750	0.45	12189	-7327	280.99	461.75	1.64	Si
SLV 4	143750	0.45	12189	-7327	280.99	461.75	1.64	Si
SLV 2	143750	0.45	13147	-7903	280.99	493.69	1.76	Si
SLV 1	143750	0.45	13147	-7903	280.99	493.69	1.76	Si
SLV 7	143750	0.45	14334	-8616	280.99	532.4	1.89	Si
SLV 8	143750	0.45	14334	-8616	280.99	532.4	1.89	Si
SLV 12	143750	0.45	17129	-10297	280.99	619.74	2.21	Si
SLV 11	143750	0.45	17129	-10297	280.99	619.74	2.21	Si
SLV 5	143750	0.45	17526	-10535	280.99	631.68	2.25	Si
SLV 6	143750	0.45	17526	-10535	280.99	631.68	2.25	Si

Verifica dei meccanismi locali di collasso con analisi cinematica lineare

forza di aggancio al piano = 0 quota mezzeria = 9.675 Wa = 0.03 Ta = 0.1503

Comb.	N top	N base	V orto	α0	M*	e*	a0*	aLim	Verifica
SLV 6	-7861	-14532	-41	0.019	1105.6	0.927	0.3046	18.76006	No
SLV 5	-7861	-14532	-41	0.019	1105.6	0.927	0.3046	18.76006	No
SLV 11	-4657	-13289	41	0.019	785.1	0.906	0.30935	18.76006	No
SLV 12	-4657	-13289	41	0.019	785.1	0.906	0.30935	18.76006	No
SLV 16	-6857	-15966	35	0.02	1004.7	0.921	0.31622	18.76006	No
SLV 15	-6857	-15966	35	0.02	1004.7	0.921	0.31622	18.76006	No
SLV 1	-5661	-11855	-35	0.02	884.9	0.914	0.31959	18.76006	No
SLV 2	-5661	-11855	-35	0.02	884.9	0.914	0.31959	18.76006	No
SLV 10	-8572	-16010	-26	0.021	1177.3	0.93	0.32613	18.76006	No
SLV 9	-8572	-16010	-26	0.021	1177.3	0.93	0.32613	18.76006	No

Tabella dei coefficienti di sicurezza minimi

Stato limite	Coeff.s.	Comb.	Verifica
PF_SLU	3.505	SLU 35	Si
V_SLU	3.702	SLU 2	Si
PF_SLV	1.786	SLV 7	Si
V_SLV	0.536	SLV 7	No
PFFP_SLV	1.643	SLV 3	Si
R_SLV	0.016	SLV 5	No

Maschio 218

Verifiche condotte secondo D.M. 17-01-18 (N.T.C.)

Dati geometrici

X ini.	Y ini.	X fin.	Y fin.	Quota i.	Quota.s	l	Sp.	h netta	h ini.	h fin.	a	a.s.,sx	a.s.,dx
-7.464	-3.248	-8.554	-3.248	L5	L6	1.09	0.28	3.55	3.55	3.55			

Caratteristiche del materiale

(Circolare 7 21-01-19 C8.5.I) Muratura in mattoni pieni e malta di calce LC2_Corti

fb	fk	fvk0	fmedio	τ0	fv0	μ	ϕ	fv,lim	E	G	FC
600000			345000	9000	20000	0.58	0.77	32500	320000000	128000000	1.2

Verifica a pressoflessione nel piano secondo D.M. 17-01-18 NTC §7.8.2.2.1 in combinazioni non sismiche, γM = 3

Comb.	Quota	N	M	σ0	Mu	c.s.	Verifica
SLU 64	8.8	-7268	-85.2	23814	2803.08	32.898	Si
SLU 64	10.7	-5063	-324.62	16590	2197.55	6.77	Si
SLU 70	8.8	-7797	-95.5	25548	2916.75	30.542	Si
SLU 70	10.7	-5738	-357.44	18800	2405.44	6.73	Si
SLU 67	8.8	-7496	-90.55	24560	2853.53	31.514	Si
SLU 67	10.7	-5459	-349.06	17888	2322.01	6.652	Si
SLU 68	8.8	-7229	-104.58	23684	2794.12	26.718	Si
SLU 68	10.7	-5294	-333.31	17347	2270.99	6.813	Si
SLU 66	8.8	-7700	-81.89	25230	2896.86	35.373	Si
SLU 66	10.7	-5488	-348.87	17981	2330.7	6.681	Si
SLU 44	8.8	-6421	-113.31	21039	2595.68	22.908	Si
SLU 44	10.7	-4475	-295.54	14662	1999.81	6.767	Si
SLU 65	8.8	-6927	-99.63	22697	2723.37	27.336	Si
SLU 65	10.7	-5016	-324.93	16435	2182.15	6.716	Si
SLU 45	8.8	-7194	-95.58	23573	2786.33	29.153	Si
SLU 45	10.7	-4947	-319.48	16208	2159.56	6.76	Si
SLU 46	8.8	-6990	-104.23	22903	2738.45	26.273	Si
SLU 46	10.7	-4918	-319.67	16115	2150.19	6.726	Si
SLU 69	8.8	-8002	-86.85	26218	2957.39	34.053	Si
SLU 69	10.7	-5766	-357.25	18894	2413.79	6.757	Si

Verifica a pressoflessione nel piano secondo D.M. 17-01-18 NTC §7.8.2.2.1 in combinazioni sismiche, γM = 2

Comb.	Quota	N	M	σ0	Mu	c.s.	Verifica
SLV 14	8.8	-9400	-2885.81	30800	3831.77	1.328	Si
SLV 14	10.7	-2772	1478.86	9082	1398.35	0.946	No, M>Mu
SLV 11	8.8	-4242	-1824.58	13900	2049.08	1.123	Si
SLV 11	10.7	-1183	650.48	0	0	0	No, e>l/2
SLV 12	8.8	-4242	-1824.58	13900	2049.08	1.123	Si
SLV 12	10.7	-1183	650.48	0	0	0	No, e>l/2
SLV 1	8.8	-3198	3242.02	0	0	0	No, e>l/2
SLV 1	10.7	-6365	-2179.23	20854	2876.71	1.32	Si
SLV 4	8.8	-1819	2741.94	0	0	0	No, e>l/2
SLV 4	10.7	-5051	-1970.63	16549	2379.89	1.208	Si
SLV 2	8.8	-3198	3242.02	0	0	0	No, e>l/2
SLV 2	10.7	-6365	-2179.23	20854	2876.71	1.32	Si
SLV 16	8.8	-8022	-3385.89	26283	3431.43	1.013	Si
SLV 16	10.7	-1458	1687.45	0	0	0	No, e>l/2
SLV 13	8.8	-9400	-2885.81	30800	3831.77	1.328	Si
SLV 13	10.7	-2772	1478.86	9082	1398.35	0.946	No, M>Mu
SLV 15	8.8	-8022	-3385.89	26283	3431.43	1.013	Si
SLV 15	10.7	-1458	1687.45	0	0	0	No, e>l/2
SLV 3	8.8	-1819	2741.94	0	0	0	No, e>l/2
SLV 3	10.7	-5051	-1970.63	16549	2379.89	1.208	Si

Verifica a taglio nel piano secondo D.M. 17-01-18 (N.T.C.) §7.8.2.2.2 con rottura per scorrimento in combinazioni non sismiche, γM = 3

Comb.	Quota	N	V par	M	σ0	σN	l'	fvd	Vt scorr.	Vt fess.diag.	Vt,lim	c.s.	Verifica
SLU 75	8.8	-7951	-30	-102.39		26053	1.09	9029	2756			93.21	Si
SLU 75	10.7	-5933	-626	-358.29		19439	1.09	8147	2487			3.97	Si
SLU 84	8.8	-8016	-41	-115.73		26263	1.09	9057	2764			66.96	Si
SLU 84	10.7	-5990	-666	-346.38		19626	1.09	8172	2494			3.74	Si
SLU 83	8.8	-8220	25	-107.08		26934	1.09	9147	2792			111.17	Si
SLU 83	10.7	-6018	-648	-346.19		19720	1.09	8185	2498			3.85	Si
SLU 82	8.8	-7714	-45	-110.78		25276	1.09	8926	2724			60.45	Si
SLU 82	10.7	-5711	-622	-338		18714	1.09	8051	2457			3.95	Si
SLU 42	8.8	-6589	-12	-89.3		21588	1.09	8434	2574			215.91	Si
SLU 42	10.7	-5089	-593	-286		16674	1.09	7779	2374			4	Si
SLU 77	8.8	-8457	41	-98.69		27711	1.09	9250	2823			69.51	Si
SLU 77	10.7	-6240	-652	-366.48		20445	1.09	8282	2528			3.88	Si
SLU 76	8.8	-7684	-93	-116.42		25177	1.09	8912	2720			29.17	Si
SLU 76	10.7	-5768	-637	-342.54		18899	1.09	8075	2465			3.87	Si
SLU 78	8.8	-8253	-26	-107.34		27041	1.09	9161	2796			108.47	Si
SLU 78	10.7	-6211	-670	-366.67		20352	1.09	8269	2524			3.77	Si
SLU 79	8.8	-8326	21	-106.95		27282	1.09	9193	2806			132.33	Si
SLU 79	10.7	-6094	-651	-350.61		19967	1.09	8218	2508			3.85	Si
SLU 80	8.8	-8122	-45	-115.61		26611	1.09	9104	2778			61.49	Si
SLU 80	10.7	-6066	-669	-350.79		19874	1.09	8205	2504			3.75	Si

Verifica a taglio nel piano secondo D.M. 17-01-18 (N.T.C.) §7.8.2.2.2 con rottura per scorrimento in combinazioni sismiche, γM = 2

Comb.	Quota	N	V par	M	σ0	σN	l'	fvd	Vt scorr.	Vt fess.diag.	Vt,lim	c.s.	Verifica
SLV 13	8.8	-9400	-5111	-2885.81		47018	0.714	16250	3249			0.64	No, Vu<V
SLV 13	10.7	-2772	-2352	1478.86		287878	0.0344	16250	156			0.07	No, Vu<V
SLV 11	8.8	-4242	-2091	-1824.58		43948	0.3448	16250	1569			0.75	No, Vu<V
SLV 11	10.7	-1183	-1248	650.48		0	0	8333	0			0	No, Vu<V
SLV 3	8.8	-1819	5089	2741.94		0	0	8333	0			0	No, Vu<V
SLV 3	10.7	-5051	1611	-1970.63		38832	0.4645	16100	2094			1.3	Si
SLV 16	8.8	-8022	-5414	-3385.89		77696	0.3687	16250	1678			0.31	No, Vu<V
SLV 16	10.7	-1458	-2508	1687.45		0	0	8333	0			0	No, Vu<V
SLV 12	8.8	-4242	-2091	-1824.58		43948	0.3448	16250	1569			0.75	No, Vu<V
SLV 12	10.7	-1183	-1248	650.48		0	0	8333	0			0	No, Vu<V
SLV 1	8.8	-3198	5392	3242.02		0	0	8333	0			0	No, Vu<V
SLV 1	10.7	-6365	1766	-2179.23		37397	0.6078	15813	2691			1.52	Si
SLV 2	8.8	-3198	5392	3242.02		0	0	8333	0			0	No, Vu<V
SLV 2	10.7	-6365	1766	-2179.23		37397	0.6078	15813	2691			1.52	Si
SLV 14	8.8	-9400	-5111	-2885.81		47018	0.714	16250	3249			0.64	No, Vu<V
SLV 14	10.7	-2772	-2352	1478.86		287878	0.0344	16250	156			0.07	No, Vu<V
SLV 4	8.8	-1819	5089	2741.94		0	0	8333	0			0	No, Vu<V
SLV 4	10.7	-5051	1611	-1970.63		38832	0.4645	16100	2094			1.3	Si
SLV 15	8.8	-8022	-5414	-3385.89		77696	0.3687	16250	1678			0.31	No, Vu<V
SLV 15	10.7	-1458	-2508	1687.45		0	0	8333	0			0	No, Vu<V

Verifica a pressoflessione fuori piano D.M. 17-01-18 (N.T.C.)

quota 9.675 Wa 0.05 denominatore 8 γM = 2

Comb.	fd	Sa	σ0	N	M	Mc	Coeff.s.	Verifica
SLV 3	143750	0.45	3323	-1014	133.36	138.12	1.04	Si
SLV 4	143750	0.45	3323	-1014	133.36	138.12	1.04	Si
SLV 8	143750	0.45	4564	-1393	133.36	187.72	1.41	Si
SLV 7	143750	0.45	4564	-1393	133.36	187.72	1.41	Si
SLV 2	143750	0.45	8635	-2635	133.36	342.87	2.57	Si
SLV 1	143750	0.45	8635	-2635	133.36	342.87	2.57	Si
SLV 11	143750	0.45	10940	-3339	133.36	425.58	3.19	Si
SLV 12	143750	0.45	10940	-3339	133.36	425.58	3.19	Si
SLV 6	143750	0.45	22270	-6797	133.36	778.12	5.83	Si
SLV 5	143750	0.45	22270	-6797	133.36	778.12	5.83	Si

Verifica dei meccanismi locali di collasso con analisi cinematica lineare

forza di aggancio al piano = 0 quota mezzeria = 9.675 Wa = 0.05 Ta = 0.0752

Comb.	N top	N base	V orto	α0	M*	e*	a0*	aLim	Verifica
SLV 11	-1117	-1694	-145	0	278.1	0.889	0	11.49604	No
SLV 12	-1117	-1694	-145	0	278.1	0.889	0	11.49604	No
SLV 7	-1983	-3151	-126	0.01	361.1	0.901	0.16062	11.49604	No
SLV 8	-1983	-3151	-126	0.01	361.1	0.901	0.16062	11.49604	No

Comb.	N top	N base	V orto	α0	M*	e*	a0*	aLim	Verifica
SLV 5	-5720	-8624	150	0.023	736.1	0.941	0.35086	11.49604	No
SLV 6	-5720	-8624	150	0.023	736.1	0.941	0.35086	11.49604	No
SLV 10	-4853	-7168	131	0.024	648.4	0.935	0.36557	11.49604	No
SLV 9	-4853	-7168	131	0.024	648.4	0.935	0.36557	11.49604	No
SLV 16	-1414	-1910	-70	0.026	306	0.892	0.4246	12.98863	No
SLV 15	-1414	-1910	-70	0.026	306	0.892	0.4246	12.98863	No

Tabella dei coefficienti di sicurezza minimi

Stato limite	Coeff.s.	Comb.	Verifica
PF_SLU	6.652	SLU 67	Si
V_SLU	3.744	SLU 84	Si
PF_SLV	0	SLV 1	No
V_SLV	0	SLV 1	No
PFFP_SLV	1.036	SLV 3	Si
R_SLV	0	SLV 11	No

Maschio 219

Verifiche condotte secondo D.M. 17-01-18 (N.T.C.)

Dati geometrici

X ini.	Y ini.	X fin.	Y fin.	Quota i.	Quota.s	l	Sp.	h netta	h ini.	h fin.	a	a.s.,sx	a.s.,dx
-5.158	1.046	-5.158	1.405	L5	L6	0.359	0.14	3.55	3.55	3.55			

Caratteristiche del materiale

(Circolare 7 21-01-19 C8.5.I) Muratura in mattoni pieni e malta di calce LC2_Corti

fb	fk	fvk0	fmedio	τ0	fv0	μ	ϕ	fv,lim	E	G	FC
600000			345000	9000	20000	0.58	0.77	32500	320000000	128000000	1.2

Verifica a pressoflessione nel piano secondo D.M. 17-01-18 NTC §7.8.2.2.1 in combinazioni non sismiche, γM = 3

Comb.	Quota	N	M	σ0	Mu	c.s.	Verifica
SLU 78	7.9	-2914	100.04	57995	150.66	1.506	Si
SLU 78	10	-1260	-68.13	25083	156.56	2.298	Si
SLU 80	7.9	-2853	97.91	56775	155.16	1.585	Si
SLU 80	10	-1230	-66.23	24479	154.42	2.332	Si
SLU 75	7.9	-2809	96.6	55895	158.2	1.638	Si
SLU 75	10	-1217	-65.55	24220	153.48	2.342	Si
SLU 77	7.9	-2928	100.42	58266	149.61	1.49	Si
SLU 77	10	-1252	-69.09	24905	155.94	2.257	Si
SLU 79	7.9	-2867	98.3	57046	154.18	1.569	Si
SLU 79	10	-1221	-67.19	24301	153.78	2.289	Si
SLU 74	7.9	-2822	96.99	56166	157.28	1.622	Si
SLU 74	10	-1208	-66.51	24042	152.83	2.298	Si
SLU 84	7.9	-2892	105.18	57555	152.32	1.448	Si
SLU 84	10	-1174	-72.74	23366	150.28	2.066	Si
SLU 82	7.9	-2787	101.75	55455	159.65	1.569	Si
SLU 82	10	-1131	-70.16	22503	146.88	2.094	Si
SLU 81	7.9	-2800	102.14	55726	158.76	1.554	Si
SLU 81	10	-1122	-71.12	22325	146.16	2.055	Si
SLU 83	7.9	-2906	105.57	57826	151.3	1.433	Si
SLU 83	10	-1165	-73.7	23189	149.6	2.03	Si

Verifica a pressoflessione nel piano secondo D.M. 17-01-18 NTC §7.8.2.2.1 in combinazioni sismiche, γM = 2

Comb.	Quota	N	M	σ0	Mu	c.s.	Verifica
SLV 11	7.9	-6214	555.01	123664	0	0	No, Rottura per schiacciamento
SLV 11	10	2961	-507.33	0	0	0	No, Trazione
SLV 10	7.9	1561	-353.46	0	0	0	No, Trazione
SLV 10	10	-3851	354.96	76637	257.66	0.726	No, M>Mu
SLV 1	7.9	1081	-237.4	0	0	0	No, Trazione
SLV 1	10	-3343	235.06	66519	273.32	1.163	Si
SLV 9	7.9	1561	-353.46	0	0	0	No, Trazione
SLV 9	10	-3851	354.96	76637	257.66	0.726	No, M>Mu
SLV 5	7.9	2596	-446.65	0	0	0	No, Trazione
SLV 5	10	-4717	438.91	93867	196.22	0.447	No, M>Mu
SLV 12	7.9	-6214	555.01	123664	0	0	No, Rottura per schiacciamento
SLV 12	10	2961	-507.33	0	0	0	No, Trazione
SLV 6	7.9	2596	-446.65	0	0	0	No, Trazione
SLV 6	10	-4717	438.91	93867	196.22	0.447	No, M>Mu
SLV 8	7.9	-5180	461.82	103084	145.35	0.315	No, M>Mu
SLV 8	10	2096	-423.37	0	0	0	No, Trazione
SLV 2	7.9	1081	-237.4	0	0	0	No, Trazione
SLV 2	10	-3343	235.06	66519	273.32	1.163	Si
SLV 7	7.9	-5180	461.82	103084	145.35	0.315	No, M>Mu
SLV 7	10	2096	-423.37	0	0	0	No, Trazione

Verifica a taglio nel piano secondo D.M. 17-01-18 (N.T.C.) §7.8.2.2.2 con rottura per scorrimento in combinazioni non sismiche, γM = 3

Comb.	Quota	N	V par	M	σ0	σN	l'	fvd	Vt scorr.	Vt fess.diag.	Vt,lim	c.s.	Verifica
SLU 83	7.9	-2906	214	105.57		57826	0.3589	10833	544			2.54	Si
SLU 83	10	-1165	210	-73.7		23871	0.3487	8738	427			2.04	Si
SLU 41	7.9	-2529	204	99.4		50319	0.3589	10833	544			2.67	Si
SLU 41	10	-917	200	-71.61		21537	0.3041	8427	359			1.8	Si
SLU 81	7.9	-2800	206	102.14		55726	0.3589	10833	544			2.64	Si
SLU 81	10	-1122	201	-71.12		23012	0.3482	8624	420			2.09	Si
SLU 37	7.9	-2489	189	92.13		49539	0.3589	10833	544			2.88	Si
SLU 37	10	-973	185	-65.11		20581	0.3376	8300	392			2.12	Si

Comb.	Quota	N	V par	M	σ0	σN	l'	fvd	Vt scorr.	Vt fess.diag.	Vt,lim	c.s.	Verifica
SLU 39	7.9	-2423	196	95.96		48219	0.3589	10833	544			2.78	Si
SLU 39	10	-873	191	-69.04		20707	0.3013	8317	351			1.83	Si
SLU 35	7.9	-2551	194	94.25		50759	0.3589	10833	544			2.81	Si
SLU 35	10	-1003	190	-67		21197	0.338	8382	397			2.09	Si
SLU 84	7.9	-2892	213	105.18		57555	0.3589	10833	544			2.55	Si
SLU 84	10	-1174	206	-72.74		23789	0.3526	8727	431			2.1	Si
SLU 42	7.9	-2515	203	99.01		50048	0.3589	10833	544			2.68	Si
SLU 42	10	-926	196	-70.66		21369	0.3095	8405	364			1.86	Si
SLU 32	7.9	-2445	185	90.82		48659	0.3589	10833	544			2.94	Si
SLU 32	10	-960	181	-64.42		20340	0.337	8268	390			2.15	Si
SLU 40	7.9	-2409	195	95.58		47948	0.3589	10833	544			2.8	Si
SLU 40	10	-882	187	-68.08		20533	0.307	8293	356			1.9	Si

Verifica a taglio nel piano secondo D.M. 17-01-18 (N.T.C.) §7.8.2.2.2 con rottura per scorrimento in combinazioni sismiche, γM = 2

Comb.	Quota	N	V par	M	σ0	σN	l'	fvd	Vt scorr.	Vt fess.diag.	Vt,lim	c.s.	Verifica
SLV 1	7.9	1081	-735	-237.4		0	0	8333	0			0	No, Vu<V
SLV 1	10	-3343	-600	235.06		72917	0.3274	16250	745			1.24	Si
SLV 12	7.9	-6214	1459	555.01		164110	0.2705	16250	615			0.42	No, Vu<V
SLV 12	10	2961	1260	-507.33		0	0	8333	0			0	No, Vu<V
SLV 11	7.9	-6214	1459	555.01		164110	0.2705	16250	615			0.42	No, Vu<V
SLV 11	10	2961	1260	-507.33		0	0	8333	0			0	No, Vu<V
SLV 7	7.9	-5180	1173	461.82		136559	0.271	16250	616			0.53	No, Vu<V
SLV 7	10	2096	1025	-423.37		0	0	8333	0			0	No, Vu<V
SLV 2	7.9	1081	-735	-237.4		0	0	8333	0			0	No, Vu<V
SLV 2	10	-3343	-600	235.06		72917	0.3274	16250	745			1.24	Si
SLV 6	7.9	2596	-1248	-446.65		0	0	8333	0			0	No, Vu<V
SLV 6	10	-4717	-1053	438.91		129957	0.2593	16250	590			0.56	No, Vu<V
SLV 10	7.9	1561	-961	-353.46		0	0	8333	0			0	No, Vu<V
SLV 10	10	-3851	-818	354.96		105033	0.2619	16250	596			0.73	No, Vu<V
SLV 9	7.9	1561	-961	-353.46		0	0	8333	0			0	No, Vu<V
SLV 9	10	-3851	-818	354.96		105033	0.2619	16250	596			0.73	No, Vu<V
SLV 8	7.9	-5180	1173	461.82		136559	0.271	16250	616			0.53	No, Vu<V
SLV 8	10	2096	1025	-423.37		0	0	8333	0			0	No, Vu<V
SLV 5	7.9	2596	-1248	-446.65		0	0	8333	0			0	No, Vu<V
SLV 5	10	-4717	-1053	438.91		129957	0.2593	16250	590			0.56	No, Vu<V

Verifica a pressoflessione fuori piano D.M. 17-01-18 (N.T.C.)

quota 9.675 Wa 0.03 denominatore 8 γM = 2

Comb.	fd	Sa	σ0	N	M	Mc	Coeff.s.	Verifica
SLV 12	143750	0.45	0	2929	23.49	0	0	No, Trazione
SLV 8	143750	0.45	0	2063	23.49	0	0	No, Trazione
SLV 16	143750	0.45	0	1556	23.49	0	0	No, Trazione
SLV 7	143750	0.45	0	2063	23.49	0	0	No, Trazione
SLV 15	143750	0.45	0	1556	23.49	0	0	No, Trazione
SLV 11	143750	0.45	0	2929	23.49	0	0	No, Trazione
SLV 14	143750	0.45	9700	-487	23.49	31.41	1.34	Si
SLV 13	143750	0.45	9700	-487	23.49	31.41	1.34	Si
SLV 4	143750	0.45	26495	-1331	23.49	72.99	3.11	Si
SLV 3	143750	0.45	26495	-1331	23.49	72.99	3.11	Si

Verifica dei meccanismi locali di collasso con analisi cinematica lineare

forza di aggancio al piano = 0 quota mezzeria = 9.675 Wa = 0.03 Ta = 0.1503

Comb.	N top	N base	V orto	α0	M*	e*	a0*	aLim	Verifica
SLV 10	1033	1561	-5	0	0	0	0	18.76006	No, Trazione
SLV 9	1033	1561	-5	0	0	0	0	18.76006	No, Trazione
SLV 13	-205	-2367	-26	0	47.8	0.89	0	18.76006	No
SLV 6	1053	2596	11	0	0	0	0	18.76006	No, Trazione
SLV 1	-137	1081	28	0	0	0	0	18.76006	No, Trazione
SLV 14	-205	-2367	-26	0	47.8	0.89	0	18.76006	No
SLV 2	-137	1081	28	0	0	0	0	18.76006	No, Trazione
SLV 5	1053	2596	11	0	0	0	0	18.76006	No, Trazione
SLV 15	-1246	-4699	-28	0.002	152	0.952	0.03311	18.76006	No
SLV 16	-1246	-4699	-28	0.002	152	0.952	0.03311	18.76006	No

Tabella dei coefficienti di sicurezza minimi

Stato limite	Coeff.s.	Comb.	Verifica
PF_SLU	1.433	SLU 83	Si
V_SLU	1.797	SLU 41	Si
PF_SLV	0	SLV 16	No
V_SLV	0	SLV 1	No
PFFP_SLV	0	SLV 16	No
R_SLV	0	SLV 10	No

Maschio 220

Verifiche condotte secondo D.M. 17-01-18 (N.T.C.)

Dati geometrici

X ini.	Y ini.	X fin.	Y fin.	Quota i.	Quota.s	l	Sp.	h netta	h ini.	h fin.	a	a.s.,sx	a.s.,dx
-5.158	2.105	-5.158	5.686	L5	L6	3.581	0.14	3.55	3.55	3.55			

Caratteristiche del materiale

(Circolare 7 21-01-19 C8.5.I) Muratura in mattoni pieni e malta di calce LC2_Corti

fb	fk	fvk0	fmedio	τ0	fv0	μ	ϕ	fv,lim	E	G	FC
600000			345000	9000	20000	0.58	0.77	32500	320000000	128000000	1.2

Verifica a pressoflessione nel piano secondo D.M. 17-01-18 NTC §7.8.2.2.1 in combinazioni non sismiche, γM = 3

Comb.	Quota	N	M	σ0	Mu	c.s.	Verifica
SLU 41	7.9	-12724	38.06	25383	15681.66	411.971	Si
SLU 41	10	-10068	-2031.81	20085	13580.69	6.684	Si
SLU 40	7.9	-12195	7.36	24327	15312.09	1000	Si
SLU 40	10	-9521	-1994.55	18994	13071.46	6.554	Si
SLU 39	7.9	-12222	9.83	24382	15332.08	1000	Si
SLU 39	10	-9539	-1994.55	19028	13087.92	6.562	Si
SLU 84	7.9	-15016	-55.03	29956	16997.44	308.852	Si
SLU 84	10	-11798	-2261.87	23536	15019.45	6.64	Si
SLU 81	7.9	-14542	-80.81	29010	16763.06	207.438	Si
SLU 81	10	-11286	-2224.62	22514	14620.84	6.572	Si
SLU 31	7.9	-11678	-49.2	23295	14927.69	303.427	Si
SLU 31	10	-9100	-1828.45	18152	12660.59	6.924	Si
SLU 73	7.9	-13997	-139.83	27923	16469.47	117.78	Si
SLU 73	10	-10847	-2058.52	21638	14260.79	6.928	Si
SLU 83	7.9	-15044	-52.57	30011	17010.55	323.577	Si
SLU 83	10	-11815	-2261.88	23570	15032.47	6.646	Si
SLU 82	7.9	-14514	-83.27	28954	16748.72	201.129	Si
SLU 82	10	-11269	-2224.62	22480	14607.02	6.566	Si
SLU 42	7.9	-12696	35.6	25328	15662.9	439.955	Si
SLU 42	10	-10051	-2031.8	20050	13565.02	6.676	Si

Verifica a pressoflessione nel piano secondo D.M. 17-01-18 NTC §7.8.2.2.1 in combinazioni sismiche, γM = 2

Comb.	Quota	N	M	σ0	Mu	c.s.	Verifica
SLV 6	7.9	-9115	-8984.8	18183	13890.17	1.546	Si
SLV 6	10	-2613	6857.3	0	0	0	No, e>l/2
SLV 5	7.9	-9115	-8984.8	18183	13890.17	1.546	Si
SLV 5	10	-2613	6857.3	0	0	0	No, e>l/2
SLV 11	7.9	-10786	8625.64	21517	15909.78	1.844	Si
SLV 11	10	-12711	-9511.25	25357	18034.15	1.896	Si
SLV 7	7.9	-9464	7357.98	18880	14325.86	1.947	Si
SLV 7	10	-10845	-8778.83	21634	15977.75	1.82	Si
SLV 12	7.9	-10786	8625.64	21517	15909.78	1.844	Si
SLV 12	10	-12711	-9511.25	25357	18034.15	1.896	Si
SLV 2	7.9	-7695	-4743.75	15351	12046.04	2.539	Si
SLV 2	10	-3317	2239.15	6617	5616.57	2.508	Si
SLV 10	7.9	-10437	-7717.15	20820	15501.08	2.009	Si
SLV 10	10	-4480	6124.88	8937	7433.56	1.214	Si
SLV 8	7.9	-9464	7357.98	18880	14325.86	1.947	Si
SLV 8	10	-10845	-8778.83	21634	15977.75	1.82	Si
SLV 1	7.9	-7695	-4743.75	15351	12046.04	2.539	Si
SLV 1	10	-3317	2239.15	6617	5616.57	2.508	Si
SLV 9	7.9	-10437	-7717.15	20820	15501.08	2.009	Si
SLV 9	10	-4480	6124.88	8937	7433.56	1.214	Si

Verifica a taglio nel piano secondo D.M. 17-01-18 (N.T.C.) §7.8.2.2.2 con rottura per scorrimento in combinazioni non sismiche, γM = 3

Comb.	Quota	N	V par	M	σ0	σN	l'	fvd	Vt scorr.	Vt fess.diag.	Vt,lim	c.s.	Verifica
SLU 36	7.9	-12891	578	17.25		25715	3.5806	8984	4504			7.79	Si
SLU 36	10	-10338	555	-1941.88		20622	3.5806	8305	4163			7.5	Si
SLU 80	7.9	-15020	647	-81.71		29962	3.5806	9551	4788			7.4	Si
SLU 80	10	-11917	613	-2133.04		23774	3.5806	8725	4374			7.14	Si
SLU 79	7.9	-15048	640	-79.25		30018	3.5806	9558	4791			7.48	Si
SLU 79	10	-11935	604	-2133.05		23808	3.5806	8730	4376			7.25	Si
SLU 84	7.9	-15016	619	-55.03		29956	3.5806	9550	4787			7.74	Si
SLU 84	10	-11798	590	-2261.87		23536	3.5806	8694	4358			7.39	Si
SLU 78	7.9	-15210	647	-73.38		30343	3.5806	9601	4813			7.44	Si
SLU 78	10	-12085	618	-2171.95		24108	3.5806	8770	4396			7.11	Si
SLU 75	7.9	-14708	590	-101.62		29342	3.5806	9468	4746			8.05	Si
SLU 75	10	-11555	567	-2134.7		23052	3.5806	8629	4326			7.63	Si
SLU 77	7.9	-15238	640	-70.92		30398	3.5806	9609	4817			7.52	Si
SLU 77	10	-12102	609	-2171.96		24142	3.5806	8775	4399			7.22	Si
SLU 83	7.9	-15044	612	-52.57		30011	3.5806	9557	4791			7.83	Si
SLU 83	10	-11815	581	-2261.88		23570	3.5806	8698	4360			7.5	Si
SLU 38	7.9	-12700	578	8.92		25335	3.5806	8934	4478			7.75	Si
SLU 38	10	-10170	549	-1902.97		20288	3.5806	8261	4141			7.54	Si
SLU 76	7.9	-14499	594	-111.59		28924	3.5806	9412	4718			7.94	Si
SLU 76	10	-11376	567	-2095.78		22694	3.5806	8581	4302			7.58	Si

Verifica a taglio nel piano secondo D.M. 17-01-18 (N.T.C.) §7.8.2.2.2 con rottura per scorrimento in combinazioni sismiche, γM = 2

Comb.	Quota	N	V par	M	σ0	σN	l'	fvd	Vt scorr.	Vt fess.diag.	Vt,lim	c.s.	Verifica
SLV 8	7.9	-9464	10400	7357.98		22248	3.0386	12783	5438			0.52	No, Vu<V
SLV 8	10	-10845	10109	-8778.83		26326	2.9424	13599	5602			0.55	No, Vu<V
SLV 7	7.9	-9464	10400	7357.98		22248	3.0386	12783	5438			0.52	No, Vu<V
SLV 7	10	-10845	10109	-8778.83		26326	2.9424	13599	5602			0.55	No, Vu<V
SLV 11	7.9	-10786	12141	8625.64		25925	2.9718	13518	5624			0.46	No, Vu<V
SLV 11	10	-12711	11247	-9511.25		29044	3.1261	14142	6189			0.55	No, Vu<V
SLV 9	7.9	-10437	-9687	-7717.15		23646	3.1526	13063	5765			0.6	No, Vu<V
SLV 9	10	-4480	-9435	6124.88		25211	1.2692	13376	2377			0.25	No, Vu<V
SLV 1	7.9	-7695	-5820	-4743.75		15609	3.5216	11455	5648			0.97	No, Vu<V
SLV 1	10	-3317	-4663	2239.15		7081	3.3456	9750	4567			0.98	No, Vu<V
SLV 5	7.9	-9115	-11429	-8984.8		26973	2.4138	13728	4639			0.41	No, Vu<V
SLV 5	10	-2613	-10574	6857.3		0	0	8333	0			0	No, Vu<V
SLV 12	7.9	-10786	12141	8625.64		25925	2.9718	13518	5624			0.46	No, Vu<V
SLV 12	10	-12711	11247	-9511.25		29044	3.1261	14142	6189			0.55	No, Vu<V
SLV 6	7.9	-9115	-11429	-8984.8		26973	2.4138	13728	4639			0.41	No, Vu<V
SLV 6	10	-2613	-10574	6857.3		0	0	8333	0			0	No, Vu<V
SLV 2	7.9	-7695	-5820	-4743.75		15609	3.5216	11455	5648			0.97	No, Vu<V
SLV 2	10	-3317	-4663	2239.15		7081	3.3456	9750	4567			0.98	No, Vu<V
SLV 10	7.9	-10437	-9687	-7717.15		23646	3.1526	13063	5765			0.6	No, Vu<V
SLV 10	10	-4480	-9435	6124.88		25211	1.2692	13376	2377			0.25	No, Vu<V

Verifica a pressoflessione fuori piano D.M. 17-01-18 (N.T.C.)

quota 9.675 Wa 0.03 denominatore 8 γM = 2

Comb.	fd	Sa	σ0	N	M	Mc	Coeff.s.	Verifica
SLV 6	143750	0.45	0	-2927	234.32	0	0	No, e>t/2
SLV 5	143750	0.45	0	-2927	234.32	0	0	No, e>t/2
SLV 2	143750	0.45	7141	-3580	234.32	235.93	1.01	Si
SLV 1	143750	0.45	7141	-3580	234.32	235.93	1.01	Si
SLV 10	143750	0.45	9634	-4830	234.32	311.41	1.33	Si
SLV 9	143750	0.45	9634	-4830	234.32	311.41	1.33	Si
SLV 3	143750	0.45	12053	-6042	234.32	381.22	1.63	Si
SLV 4	143750	0.45	12053	-6042	234.32	381.22	1.63	Si
SLV 13	143750	0.45	19794	-9922	234.32	582.05	2.48	Si
SLV 14	143750	0.45	19794	-9922	234.32	582.05	2.48	Si

Verifica dei meccanismi locali di collasso con analisi cinematica lineare

forza di aggancio al piano = 0 quota mezzeria = 9.675 Wa = 0.03 Ta = 0.1503

Comb.	N top	N base	V orto	α0	M*	e*	a0*	aLim	Verifica
SLV 13	-5654	-12101	-15	0.022	831.4	0.921	0.34685	18.76006	No
SLV 14	-5654	-12101	-15	0.022	831.4	0.921	0.34685	18.76006	No
SLV 15	-5612	-12206	-13	0.022	827.2	0.921	0.35225	18.76006	No
SLV 16	-5612	-12206	-13	0.022	827.2	0.921	0.35225	18.76006	No
SLV 4	-4366	-7800	15	0.022	702.6	0.911	0.35886	18.76006	No
SLV 3	-4366	-7800	15	0.022	702.6	0.911	0.35886	18.76006	No
SLV 2	-4408	-7695	13	0.023	706.7	0.911	0.36458	18.76006	No
SLV 1	-4408	-7695	13	0.023	706.7	0.911	0.36458	18.76006	No
SLV 10	-5267	-10437	-8	0.023	792.5	0.918	0.36625	18.76006	No
SLV 9	-5267	-10437	-8	0.023	792.5	0.918	0.36625	18.76006	No

Tabella dei coefficienti di sicurezza minimi

Stato limite	Coeff.s.	Comb.	Verifica
PF_SLU	6.554	SLU 40	Si
V_SLU	7.109	SLU 78	Si
PF_SLV	0	SLV 5	No
V_SLV	0	SLV 5	No
PFFP_SLV	0	SLV 5	No
R_SLV	0.018	SLV 13	No

Maschio 221

Verifiche condotte secondo D.M. 17-01-18 (N.T.C.)

Dati geometrici

X ini.	Y ini.	X fin.	Y fin.	Quota i.	Quota.s	l	Sp.	h netta	h ini.	h fin.	a	a.s.,sx	a.s.,dx
-5.105	5.83	-5.105	6.536	L5	L6	0.705	0.28	3.55	3.55	3.55			

Caratteristiche del materiale

(Circolare 7 21-01-19 C8.5.I) Muratura in mattoni pieni e malta di calce LC2_Corti

fb	fk	fvk0	fmedio	τ0	fv0	μ	ϕ	fv,lim	E	G	FC
600000			345000	9000	20000	0.58	0.77	32500	320000000	128000000	1.2

Verifica a pressoflessione nel piano secondo D.M. 17-01-18 NTC §7.8.2.2.1 in combinazioni non sismiche, γM = 3

Comb.	Quota	N	M	σ0	Mu	c.s.	Verifica
SLU 42	7.9	-4735	-94.05	23977	1178.35	12.529	Si
SLU 42	11.45	-2596	62.3	13145	767.76	12.323	Si
SLU 41	7.9	-4741	-94.87	24008	1179.24	12.43	Si
SLU 41	11.45	-2599	62.44	13163	768.59	12.31	Si
SLU 19	7.9	-4050	-77.06	20510	1068.76	13.869	Si
SLU 19	11.45	-2093	53.68	10600	642.17	11.962	Si
SLU 31	7.9	-4342	-83.59	21988	1117.99	13.375	Si
SLU 31	11.45	-2276	58.08	11524	689.03	11.863	Si
SLU 81	7.9	-5407	-103.09	27381	1265.95	12.28	Si
SLU 81	11.45	-2822	70.54	14287	820.5	11.632	Si
SLU 18	7.9	-4057	-77.88	20541	1069.84	13.737	Si
SLU 18	11.45	-2097	53.81	10618	643.07	11.95	Si
SLU 40	7.9	-4524	-92.31	22907	1146.72	12.422	Si
SLU 40	11.45	-2353	65.07	11916	708.5	10.888	Si
SLU 83	7.9	-5619	-104.82	28451	1289.39	12.3	Si
SLU 83	11.45	-3064	67.77	15516	874.78	12.908	Si
SLU 82	7.9	-5401	-102.27	27349	1265.23	12.372	Si
SLU 82	11.45	-2818	70.41	14269	819.71	11.642	Si
SLU 39	7.9	-4530	-93.13	22938	1147.67	12.323	Si
SLU 39	11.45	-2357	65.2	11934	709.37	10.879	Si

Verifica a pressoflessione nel piano secondo D.M. 17-01-18 NTC §7.8.2.2.1 in combinazioni sismiche, γM = 2

Comb.	Quota	N	M	σ0	Mu	c.s.	Verifica
SLV 7	7.9	-5492	67.15	27808	1495.94	22.278	Si
SLV 7	11.45	-2402	-316.53	12163	762.76	2.41	Si
SLV 11	7.9	-5803	-78.26	29382	1554.23	19.86	Si
SLV 11	11.45	-2761	-298.64	13981	862.31	2.887	Si
SLV 10	7.9	-1946	-188	9855	630.98	3.356	Si
SLV 10	11.45	-1539	393.85	7794	508.18	1.29	Si
SLV 5	7.9	-1635	-42.6	8281	537.66	12.622	Si
SLV 5	11.45	-1180	375.97	5975	395.8	1.053	Si
SLV 13	7.9	-3658	-319.23	18525	1094.56	3.429	Si
SLV 13	11.45	-2386	172.34	12081	758.19	4.399	Si
SLV 6	7.9	-1635	-42.6	8281	537.66	12.622	Si
SLV 6	11.45	-1180	375.97	5975	395.8	1.053	Si

Comb.	Quota	N	M	σ0	Mu	c.s.	Verifica
SLV 12	7.9	-5803	-78.26	29382	1554.23	19.86	Si
SLV 12	11.45	-2761	-298.64	13981	862.31	2.887	Si
SLV 9	7.9	-1946	-188	9855	630.98	3.356	Si
SLV 9	11.45	-1539	393.85	7794	508.18	1.29	Si
SLV 14	7.9	-3658	-319.23	18525	1094.56	3.429	Si
SLV 14	11.45	-2386	172.34	12081	758.19	4.399	Si
SLV 8	7.9	-5492	67.15	27808	1495.94	22.278	Si
SLV 8	11.45	-2402	-316.53	12163	762.76	2.41	Si

Verifica a taglio nel piano secondo D.M. 17-01-18 (N.T.C.) §7.8.2.2.2 con rottura per scorrimento in combinazioni non sismiche, γM = 3

Comb.	Quota	N	V par	M	σ0	σN	l'	fvd	Vt scorr.	Vt fess.diag.	Vt,lim	c.s.	Verifica
SLU 41	7.9	-4741	-547	-94.87		24008	0.7053	8757	1729			3.16	Si
SLU 41	11.45	-2599	-383	62.44		13163	0.7053	7311	1444			3.77	Si
SLU 82	7.9	-5401	-595	-102.27		27349	0.7053	9202	1817			3.06	Si
SLU 82	11.45	-2818	-435	70.41		14269	0.7053	7458	1473			3.39	Si
SLU 42	7.9	-4735	-545	-94.05		23977	0.7053	8752	1728			3.17	Si
SLU 42	11.45	-2596	-383	62.3		13145	0.7053	7308	1443			3.77	Si
SLU 77	7.9	-5738	-580	-99.83		29057	0.7053	9430	1862			3.21	Si
SLU 77	11.45	-3305	-380	63.23		16738	0.7053	7787	1538			4.05	Si
SLU 81	7.9	-5407	-597	-103.09		27381	0.7053	9206	1818			3.05	Si
SLU 81	11.45	-2822	-436	70.54		14287	0.7053	7461	1473			3.38	Si
SLU 74	7.9	-5527	-570	-98.1		27987	0.7053	9287	1834			3.22	Si
SLU 74	11.45	-3063	-398	65.99		15509	0.7053	7623	1506			3.78	Si
SLU 40	7.9	-4524	-535	-92.31		22907	0.7053	8610	1700			3.18	Si
SLU 40	11.45	-2353	-401	65.07		11916	0.7053	7144	1411			3.52	Si
SLU 84	7.9	-5612	-604	-104		28419	0.7053	9345	1845			3.05	Si
SLU 84	11.45	-3061	-417	67.64		15498	0.7053	7622	1505			3.61	Si
SLU 83	7.9	-5619	-607	-104.82		28451	0.7053	9349	1846			3.04	Si
SLU 83	11.45	-3064	-417	67.77		15516	0.7053	7624	1506			3.61	Si
SLU 39	7.9	-4530	-538	-93.13		22938	0.7053	8614	1701			3.16	Si
SLU 39	11.45	-2357	-402	65.2		11934	0.7053	7147	1411			3.51	Si

Verifica a taglio nel piano secondo D.M. 17-01-18 (N.T.C.) §7.8.2.2.2 con rottura per scorrimento in combinazioni sismiche, γM = 2

Comb.	Quota	N	V par	M	σ0	σN	l'	fvd	Vt scorr.	Vt fess.diag.	Vt,lim	c.s.	Verifica
SLV 10	7.9	-1946	-1884	-188		9855	0.7053	10304	2035			1.08	Si
SLV 10	11.45	-1539	-1483	393.85		18935	0.2903	12120	985			0.66	No, Vu<V
SLV 14	7.9	-3658	-1848	-319.23		18525	0.7053	12038	2377			1.29	Si
SLV 14	11.45	-2386	-1559	172.34		12081	0.7053	10750	2123			1.36	Si
SLV 3	7.9	-3780	1144	198.38		19138	0.7053	12161	2402			2.1	Si
SLV 3	11.45	-1555	1078	-95.02		7876	0.7053	9908	1957			1.82	Si
SLV 8	7.9	-5492	1180	67.15		27808	0.7053	13895	2744			2.33	Si
SLV 8	11.45	-2402	1002	-316.53		12946	0.6626	10923	2027			2.02	Si
SLV 9	7.9	-1946	-1884	-188		9855	0.7053	10304	2035			1.08	Si
SLV 9	11.45	-1539	-1483	393.85		18935	0.2903	12120	985			0.66	No, Vu<V
SLV 5	7.9	-1635	-1201	-42.6		8281	0.7053	9990	1973			1.64	Si
SLV 5	11.45	-1180	-859	375.97		41252	0.1022	16250	465			0.54	No, Vu<V
SLV 13	7.9	-3658	-1848	-319.23		18525	0.7053	12038	2377			1.29	Si
SLV 13	11.45	-2386	-1559	172.34		12081	0.7053	10750	2123			1.36	Si
SLV 4	7.9	-3780	1144	198.38		19138	0.7053	12161	2402			2.1	Si
SLV 4	11.45	-1555	1078	-95.02		7876	0.7053	9908	1957			1.82	Si
SLV 6	7.9	-1635	-1201	-42.6		8281	0.7053	9990	1973			1.64	Si
SLV 6	11.45	-1180	-859	375.97		41252	0.1022	16250	465			0.54	No, Vu<V
SLV 7	7.9	-5492	1180	67.15		27808	0.7053	13895	2744			2.33	Si
SLV 7	11.45	-2402	1002	-316.53		12946	0.6626	10923	2027			2.02	Si

Verifica a pressoflessione fuori piano D.M. 17-01-18 (N.T.C.)

quota 9.675 Wa 0.05 denominatore 8 γM = 2

Comb.	fd	Sa	σ0	N	M	Mc	Coeff.s.	Verifica
SLV 5	143750	0.45	9432	-1863	88.3	240.64	2.73	Si
SLV 6	143750	0.45	9432	-1863	88.3	240.64	2.73	Si
SLV 9	143750	0.45	10592	-2092	88.3	267.46	3.03	Si
SLV 10	143750	0.45	10592	-2092	88.3	267.46	3.03	Si
SLV 2	143750	0.45	10691	-2111	88.3	269.72	3.05	Si
SLV 1	143750	0.45	10691	-2111	88.3	269.72	3.05	Si
SLV 4	143750	0.45	12930	-2553	88.3	319.66	3.62	Si
SLV 3	143750	0.45	12930	-2553	88.3	319.66	3.62	Si
SLV 14	143750	0.45	14558	-2875	88.3	354.55	4.02	Si
SLV 13	143750	0.45	14558	-2875	88.3	354.55	4.02	Si

Verifica dei meccanismi locali di collasso con analisi cinematica lineare

forza di aggancio al piano = 0 quota mezzeria = 9.675 Wa = 0.05 Ta = 0.0752

Comb.	N top	N base	V orto	α0	M*	e*	a0*	aLim	Verifica
SLV 16	-2752	-4815	-2	0.046	380.4	0.929	0.72214	12.98863	No
SLV 15	-2752	-4815	-2	0.046	380.4	0.929	0.72214	12.98863	No
SLV 13	-2386	-3658	0	0.048	343.4	0.924	0.74895	12.98863	No
SLV 14	-2386	-3658	0	0.048	343.4	0.924	0.74895	12.98863	No
SLV 11	-2761	-5803	-3	0.046	381.2	0.93	0.71534	11.49604	No
SLV 12	-2761	-5803	-3	0.046	381.2	0.93	0.71534	11.49604	No
SLV 3	-1555	-3780	0	0.051	260.4	0.907	0.81372	12.98863	No
SLV 4	-1555	-3780	0	0.051	260.4	0.907	0.81372	12.98863	No
SLV 8	-2402	-5492	-3	0.047	345.1	0.924	0.7346	11.49604	No
SLV 7	-2402	-5492	-3	0.047	345.1	0.924	0.7346	11.49604	No

Tabella dei coefficienti di sicurezza minimi

Stato limite	Coeff.s.	Comb.	Verifica
PF_SLU	10.879	SLU 39	Si
V_SLU	3.044	SLU 83	Si
PF_SLV	1.053	SLV 5	Si
V_SLV	0.541	SLV 5	No

Stato limite	Coeff.s.	Comb.	Verifica
PFFP_SLV	2.725	SLV 5	Si
R_SLV	0.056	SLV 15	No

Maschio 222

Verifiche condotte secondo D.M. 17-01-18 (N.T.C.)

Dati geometrici

X ini.	Y ini.	X fin.	Y fin.	Quota i.	Quota.s	l	Sp.	h netta	h ini.	h fin.	a	a.s.,sx	a.s.,dx
-5.954	-3.248	-6.464	-3.248	L5	L6	0.51	0.28	3.55	3.55	3.55			

Caratteristiche del materiale

(Circolare 7 21-01-19 C8.5.I) Muratura in mattoni pieni e malta di calce LC2_Corti

fb	fk	fvk0	fmedio	τ0	fv0	μ	ϕ	fv,lim	E	G	FC
600000			345000	9000	20000	0.58	0.77	32500	320000000	128000000	1.2

Verifica a pressoflessione nel piano secondo D.M. 17-01-18 NTC §7.8.2.2.1 in combinazioni non sismiche, γM = 3

Comb.	Quota	N	M	σ0	Mu	c.s.	Verifica
SLU 10	9.9	-3072	-76.27	21515	576.53	7.559	Si
SLU 10	10.7	-3098	-0.86	21694	579.58	677.716	Si
SLU 55	9.9	-3916	-89.36	27426	662.45	7.413	Si
SLU 55	10.7	-4001	-10.17	28019	669.35	65.839	Si
SLU 52	9.9	-3767	-88.27	26381	649.53	7.359	Si
SLU 52	10.7	-3803	-7.29	26632	652.73	89.499	Si
SLU 2	9.9	-2734	-74.57	19143	533.27	7.152	Si
SLU 2	10.7	-2663	1.67	18646	523.57	313.357	Si
SLU 44	9.9	-3428	-86.56	24008	616.58	7.123	Si
SLU 44	10.7	-3368	-4.77	23585	610.17	127.996	Si
SLU 5	9.9	-2883	-75.66	20189	552.96	7.309	Si
SLU 5	10.7	-2861	-1.2	20033	550.08	457.473	Si
SLU 73	9.9	-4118	-89.57	28835	678.32	7.573	Si
SLU 73	10.7	-4231	-15.32	29628	686.48	44.819	Si
SLU 65	9.9	-3779	-87.87	26463	650.58	7.404	Si
SLU 65	10.7	-3796	-12.79	26581	652.08	50.981	Si
SLU 47	9.9	-3578	-87.66	25054	631.72	7.207	Si
SLU 47	10.7	-3566	-7.64	24972	630.57	82.531	Si
SLU 68	9.9	-3928	-88.96	27508	663.43	7.458	Si
SLU 68	10.7	-3994	-15.66	27968	668.76	42.694	Si

Verifica a pressoflessione nel piano secondo D.M. 17-01-18 NTC §7.8.2.2.1 in combinazioni sismiche, γM = 2

Comb.	Quota	N	M	σ0	Mu	c.s.	Verifica
SLV 7	9.9	-1479	295.08	10356	345.15	1.17	Si
SLV 7	10.7	-3041	-332.06	21298	640.38	1.929	Si
SLV 15	9.9	-4999	-550.18	35007	909.54	1.653	Si
SLV 15	10.7	-5583	781.59	39099	968.17	1.239	Si
SLV 4	9.9	-382	567.38	0	0	0	No, e>l/2
SLV 4	10.7	-977	-878.51	0	0	0	No, e>l/2
SLV 13	9.9	-5444	-652.05	38125	955.12	1.465	Si
SLV 13	10.7	-5196	811.23	36385	930.4	1.147	Si
SLV 16	9.9	-4999	-550.18	35007	909.54	1.653	Si
SLV 16	10.7	-5583	781.59	39099	968.17	1.239	Si
SLV 8	9.9	-1479	295.08	10356	345.15	1.17	Si
SLV 8	10.7	-3041	-332.06	21298	640.38	1.929	Si
SLV 14	9.9	-5444	-652.05	38125	955.12	1.465	Si
SLV 14	10.7	-5196	811.23	36385	930.4	1.147	Si
SLV 2	9.9	-828	465.51	0	0	0	No, e>l/2
SLV 2	10.7	-589	-848.88	0	0	0	No, e>l/2
SLV 1	9.9	-828	465.51	0	0	0	No, e>l/2
SLV 1	10.7	-589	-848.88	0	0	0	No, e>l/2
SLV 3	9.9	-382	567.38	0	0	0	No, e>l/2
SLV 3	10.7	-977	-878.51	0	0	0	No, e>l/2

Verifica a taglio nel piano secondo D.M. 17-01-18 (N.T.C.) §7.8.2.2.2 con rottura per scorrimento in combinazioni non sismiche, γM = 3

Comb.	Quota	N	V par	M	σ0	σN	l'	fvd	Vt scorr.	Vt fess.diag.	Vt,lim	c.s.	Verifica
SLU 55	9.9	-3916	-70	-89.36		27426	0.51	9212	1316			18.74	Si
SLU 55	10.7	-4001	-74	-10.17		28019	0.51	9291	1327			17.93	Si
SLU 13	9.9	-3222	-69	-77.36		22561	0.51	8564	1223			17.8	Si
SLU 13	10.7	-3296	-73	-3.73		23080	0.51	8633	1233			17	Si
SLU 2	9.9	-2734	-83	-74.57		19143	0.51	8108	1158			14.01	Si
SLU 2	10.7	-2663	-86	1.67		18646	0.51	8042	1148			13.28	Si
SLU 47	9.9	-3578	-78	-87.66		25054	0.51	8896	1270			16.21	Si
SLU 47	10.7	-3566	-82	-7.64		24972	0.51	8885	1269			15.44	Si
SLU 23	9.9	-3084	-68	-75.87		21598	0.51	8435	1205			17.61	Si
SLU 23	10.7	-3091	-72	-6.35		21642	0.51	8441	1205			16.69	Si
SLU 5	9.9	-2883	-77	-75.66		20189	0.51	8247	1178			15.32	Si
SLU 5	10.7	-2861	-81	-1.2		20033	0.51	8227	1175			14.57	Si
SLU 10	9.9	-3072	-75	-76.27		21515	0.51	8424	1203			16.15	Si
SLU 10	10.7	-3098	-78	-0.86		21694	0.51	8448	1206			15.4	Si
SLU 65	9.9	-3779	-70	-87.87		26463	0.51	9084	1297			18.55	Si
SLU 65	10.7	-3796	-74	-12.79		26581	0.51	9100	1299			17.62	Si
SLU 52	9.9	-3767	-76	-88.27		26381	0.51	9073	1296			17.04	Si
SLU 52	10.7	-3803	-80	-7.29		26632	0.51	9107	1300			16.29	Si
SLU 44	9.9	-3428	-84	-86.56		24008	0.51	8757	1250			14.85	Si
SLU 44	10.7	-3368	-88	-4.77		23585	0.51	8700	1242			14.12	Si

Verifica a taglio nel piano secondo D.M. 17-01-18 (N.T.C.) §7.8.2.2.2 con rottura per scorrimento in combinazioni sismiche, γM = 2

Comb.	Quota	N	V par	M	σ0	σN	l'	fvd	Vt scorr.	Vt fess.diag.	Vt,lim	c.s.	Verifica
SLV 4	9.9	-382	2224	567.38		0	0	8333	0			0	No, Vu<V
SLV 4	10.7	-977	1849	-878.51		0	0	8333	0			0	No, Vu<V
SLV 15	9.9	-4999	-1940	-550.18		41059	0.4348	16250	1978			1.02	Si
SLV 15	10.7	-5583	-1590	781.59		57791	0.345	16250	1570			0.99	No, Vu<V
SLV 7	9.9	-1479	1057	295.08		31740	0.1664	14681	684			0.65	No, Vu<V
SLV 7	10.7	-3041	905	-332.06		24830	0.4375	13299	1629			1.8	Si
SLV 2	9.9	-828	1975	465.51		0	0	8333	0			0	No, Vu<V
SLV 2	10.7	-589	1626	-848.88		0	0	8333	0			0	No, Vu<V
SLV 8	9.9	-1479	1057	295.08		31740	0.1664	14681	684			0.65	No, Vu<V
SLV 8	10.7	-3041	905	-332.06		24830	0.4375	13299	1629			1.8	Si
SLV 16	9.9	-4999	-1940	-550.18		41059	0.4348	16250	1978			1.02	Si
SLV 16	10.7	-5583	-1590	781.59		57791	0.345	16250	1570			0.99	No, Vu<V
SLV 3	9.9	-382	2224	567.38		0	0	8333	0			0	No, Vu<V
SLV 3	10.7	-977	1849	-878.51		0	0	8333	0			0	No, Vu<V
SLV 14	9.9	-5444	-2188	-652.05		47927	0.4057	16250	1846			0.84	No, Vu<V
SLV 14	10.7	-5196	-1813	811.23		62562	0.2966	16250	1350			0.74	No, Vu<V
SLV 1	9.9	-828	1975	465.51		0	0	8333	0			0	No, Vu<V
SLV 1	10.7	-589	1626	-848.88		0	0	8333	0			0	No, Vu<V
SLV 13	9.9	-5444	-2188	-652.05		47927	0.4057	16250	1846			0.84	No, Vu<V
SLV 13	10.7	-5196	-1813	811.23		62562	0.2966	16250	1350			0.74	No, Vu<V

Verifica a pressoflessione fuori piano D.M. 17-01-18 (N.T.C.)

quota 9.675 Wa 0.05 denominatore 8 γM = 2

Comb.	fd	Sa	σ0	N	M	Mc	Coeff.s.	Verifica
SLV 3	143750	0.45	7903	-1129	62.4	147.78	2.37	Si
SLV 4	143750	0.45	7903	-1129	62.4	147.78	2.37	Si
SLV 7	143750	0.45	8480	-1211	62.4	157.77	2.53	Si
SLV 8	143750	0.45	8480	-1211	62.4	157.77	2.53	Si
SLV 2	143750	0.45	11015	-1573	62.4	200.36	3.21	Si
SLV 1	143750	0.45	11015	-1573	62.4	200.36	3.21	Si
SLV 11	143750	0.45	12087	-1726	62.4	217.74	3.49	Si
SLV 12	143750	0.45	12087	-1726	62.4	217.74	3.49	Si
SLV 6	143750	0.45	18853	-2692	62.4	318.75	5.11	Si
SLV 5	143750	0.45	18853	-2692	62.4	318.75	5.11	Si

Verifica dei meccanismi locali di collasso con analisi cinematica lineare

forza di aggancio al piano = 0 quota mezzeria = 9.675 Wa = 0.05 Ta = 0.0752

Comb.	N top	N base	V orto	α0	M*	e*	a0*	aLim	Verifica
SLV 10	-1134	-2454	-85	0	189.2	0.907	0	11.49604	No
SLV 9	-1134	-2454	-85	0	189.2	0.907	0	11.49604	No
SLV 5	-517	-2365	-88	0	129.6	0.889	0	11.49604	No
SLV 6	-517	-2365	-88	0	129.6	0.889	0	11.49604	No
SLV 7	-1622	-1425	85	0.007	238	0.921	0.11211	11.49604	No
SLV 8	-1622	-1425	85	0.007	238	0.921	0.11211	11.49604	No
SLV 12	-2240	-1513	88	0.014	300.2	0.934	0.21062	11.49604	No
SLV 11	-2240	-1513	88	0.014	300.2	0.934	0.21062	11.49604	No
SLV 2	-184	-1933	-30	0.02	101.4	0.907	0.32379	12.98863	No
SLV 1	-184	-1933	-30	0.02	101.4	0.907	0.32379	12.98863	No

Tabella dei coefficienti di sicurezza minimi

Stato limite	Coeff.s.	Comb.	Verifica
PF_SLU	7.123	SLU 44	Si
V_SLU	13.278	SLU 2	Si
PF_SLV	0	SLV 1	No
V_SLV	0	SLV 1	No
PFFP_SLV	2.368	SLV 3	Si
R_SLV	0	SLV 5	No

Maschio 223

Verifiche condotte secondo D.M. 17-01-18 (N.T.C.)

Dati geometrici

X ini.	Y ini.	X fin.	Y fin.	Quota i.	Quota.s	l	Sp.	h netta	h ini.	h fin.	a	a.s.,sx	a.s.,dx
-3.223	-3.248	-5.454	-3.248	L5	L6	2.231	0.28	3.55	3.55	3.55			

Caratteristiche del materiale

(Circolare 7 21-01-19 C8.5.I) Muratura in mattoni pieni e malta di calce LC2_Corti

fb	fk	fvk0	fmedio	τ0	fv0	μ	ϕ	fv,lim	E	G	FC
600000			345000	9000	20000	0.58	0.77	32500	320000000	128000000	1.2

Verifica a pressoflessione nel piano secondo D.M. 17-01-18 NTC §7.8.2.2.1 in combinazioni non sismiche, γM = 3

Comb.	Quota	N	M	σ0	Mu	c.s.	Verifica
SLU 58	9.9	-14433	817.94	23109	11530.81	14.097	Si
SLU 58	10.7	-13309	-114.66	21309	10960.6	95.588	Si
SLU 35	9.9	-13644	792.53	21846	11136.57	14.052	Si
SLU 35	10.7	-12763	-64.58	20434	10663.55	165.119	Si
SLU 71	9.9	-14552	819.92	23299	11587.72	14.133	Si
SLU 71	10.7	-13414	-100.66	21477	11016.29	109.442	Si
SLU 83	9.9	-15669	896.36	25087	12093.42	13.492	Si
SLU 83	10.7	-14531	-166.73	23265	11577.71	69.438	Si
SLU 79	9.9	-15742	902.53	25204	12124.71	13.434	Si
SLU 79	10.7	-14604	-112.56	23383	11612.65	103.165	Si
SLU 56	9.9	-14777	836.12	23660	11694.32	13.986	Si
SLU 56	10.7	-13653	-113.6	21860	11141.07	98.075	Si

Comb.	Quota	N	M	σ0	Mu	c.s.	Verifica
SLU 81	9.9	-15085	854.78	24153	11836.09	13.847	Si
SLU 81	10.7	-13948	-215.8	22331	11291.28	52.322	Si
SLU 74	9.9	-15503	879.13	24821	12021.81	13.675	Si
SLU 74	10.7	-14365	-160.56	23000	11497.82	71.609	Si
SLU 77	9.9	-16086	920.71	25755	12268.46	13.325	Si
SLU 77	10.7	-14948	-111.5	23934	11773.57	105.596	Si
SLU 69	9.9	-14896	838.1	23850	11749.43	14.019	Si
SLU 69	10.7	-13758	-99.59	22028	11195.18	112.411	Si

Verifica a pressoflessione nel piano secondo D.M. 17-01-18 NTC §7.8.2.2.1 in combinazioni sismiche, γM = 2

Comb.	Quota	N	M	σ0	Mu	c.s.	Verifica
SLV 15	9.9	-8785	-527.88	14066	8670.15	16.424	Si
SLV 15	10.7	-7953	3942.46	12733	7945.52	2.015	Si
SLV 13	9.9	-10901	-841.22	17454	10421.52	12.389	Si
SLV 13	10.7	-10034	3671.15	16065	9719.44	2.648	Si
SLV 11	9.9	-6670	717.08	10679	6788.93	9.467	Si
SLV 11	10.7	-5863	1484.48	9388	6036.87	4.067	Si
SLV 4	9.9	-9796	1984.71	15684	9523.18	4.798	Si
SLV 4	10.7	-8919	-3984.72	14280	8784.91	2.205	Si
SLV 1	9.9	-11912	1671.38	19073	11212.02	6.708	Si
SLV 1	10.7	-11000	-4256.03	17612	10500.05	2.467	Si
SLV 14	9.9	-10901	-841.22	17454	10421.52	12.389	Si
SLV 14	10.7	-10034	3671.15	16065	9719.44	2.648	Si
SLV 3	9.9	-9796	1984.71	15684	9523.18	4.798	Si
SLV 3	10.7	-8919	-3984.72	14280	8784.91	2.205	Si
SLV 16	9.9	-8785	-527.88	14066	8670.15	16.424	Si
SLV 16	10.7	-7953	3942.46	12733	7945.52	2.015	Si
SLV 12	9.9	-6670	717.08	10679	6788.93	9.467	Si
SLV 12	10.7	-5863	1484.48	9388	6036.87	4.067	Si
SLV 2	9.9	-11912	1671.38	19073	11212.02	6.708	Si
SLV 2	10.7	-11000	-4256.03	17612	10500.05	2.467	Si

Verifica a taglio nel piano secondo D.M. 17-01-18 (N.T.C.) §7.8.2.2.2 con rottura per scorrimento in combinazioni non sismiche, γM = 3

Comb.	Quota	N	V par	M	σ0	σN	I'	fvd	Vt scorr.	Vt fess.diag.	Vt,lim	c.s.	Verifica
SLU 62	9.9	-14360	1217	811.76		22992	2.2306	8621	5385			4.42	Si
SLU 62	10.7	-13236	1217	-168.84		21191	2.2306	8381	5235			4.3	Si
SLU 60	9.9	-13777	1227	770.18		22058	2.2306	8497	5307			4.33	Si
SLU 60	10.7	-12652	1227	-217.9		20257	2.2306	8257	5157			4.2	Si
SLU 81	9.9	-15085	1331	854.78		24153	2.2306	8776	5481			4.12	Si
SLU 81	10.7	-13948	1331	-215.8		22331	2.2306	8533	5330			4	Si
SLU 79	9.9	-15742	1261	902.53		25204	2.2306	8916	5569			4.41	Si
SLU 79	10.7	-14604	1261	-112.56		23383	2.2306	8673	5417			4.29	Si
SLU 53	9.9	-14194	1188	794.54		22726	2.2306	8586	5362			4.51	Si
SLU 53	10.7	-13070	1188	-162.67		20926	2.2306	8346	5212			4.39	Si
SLU 77	9.9	-16086	1283	920.71		25755	2.2306	8990	5615			4.38	Si
SLU 77	10.7	-14948	1283	-111.5		23934	2.2306	8747	5463			4.26	Si
SLU 83	9.9	-15669	1321	896.36		25087	2.2306	8900	5559			4.21	Si
SLU 83	10.7	-14531	1321	-166.73		23265	2.2306	8658	5407			4.09	Si
SLU 74	9.9	-15503	1292	879.13		24821	2.2306	8865	5537			4.28	Si
SLU 74	10.7	-14365	1292	-160.56		23000	2.2306	8622	5385			4.17	Si
SLU 82	9.9	-15446	1245	645.4		24730	2.2306	8853	5529			4.44	Si
SLU 82	10.7	-14308	1245	-356.42		22909	2.2306	8610	5378			4.32	Si
SLU 64	9.9	-13385	1162	736.76		21431	2.2306	8413	5255			4.52	Si
SLU 64	10.7	-12247	1162	-198.8		19609	2.2306	8170	5103			4.39	Si

Verifica a taglio nel piano secondo D.M. 17-01-18 (N.T.C.) §7.8.2.2.2 con rottura per scorrimento in combinazioni sismiche, γM = 2

Comb.	Quota	N	V par	M	σ0	σN	I'	fvd	Vt scorr.	Vt fess.diag.	Vt,lim	c.s.	Verifica
SLV 1	9.9	-11912	7681	1671.38		19073	2.2306	12148	7587			0.99	No, Vu<V
SLV 1	10.7	-11000	7423	-4256.03		17978	2.1852	11929	7299			0.98	No, Vu<V
SLV 13	9.9	-10901	-5796	-841.22		17454	2.2306	11824	7385			1.27	Si
SLV 13	10.7	-10034	-5649	3671.15		16065	2.2306	11546	7212			1.28	Si
SLV 14	9.9	-10901	-5796	-841.22		17454	2.2306	11824	7385			1.27	Si
SLV 14	10.7	-10034	-5649	3671.15		16065	2.2306	11546	7212			1.28	Si
SLV 8	9.9	-6973	2800	1470.86		11165	2.2306	10566	6599			2.36	Si
SLV 8	10.7	-6153	2925	-893.67		9852	2.2306	10304	6435			2.2	Si
SLV 4	9.9	-9796	7606	1984.71		15684	2.2306	11470	7164			0.94	No, Vu<V
SLV 4	10.7	-8919	7459	-3984.72		15882	2.0056	11510	6464			0.87	No, Vu<V
SLV 7	9.9	-6973	2800	1470.86		11165	2.2306	10566	6599			2.36	Si
SLV 7	10.7	-6153	2925	-893.67		9852	2.2306	10304	6435			2.2	Si
SLV 3	9.9	-9796	7606	1984.71		15684	2.2306	11470	7164			0.94	No, Vu<V
SLV 3	10.7	-8919	7459	-3984.72		15882	2.0056	11510	6464			0.87	No, Vu<V
SLV 16	9.9	-8785	-5872	-527.88		14066	2.2306	11146	6962			1.19	Si
SLV 16	10.7	-7953	-5614	3942.46		15281	1.8587	11389	5928			1.06	Si
SLV 15	9.9	-8785	-5872	-527.88		14066	2.2306	11146	6962			1.19	Si
SLV 15	10.7	-7953	-5614	3942.46		15281	1.8587	11389	5928			1.06	Si
SLV 2	9.9	-11912	7681	1671.38		19073	2.2306	12148	7587			0.99	No, Vu<V
SLV 2	10.7	-11000	7423	-4256.03		17978	2.1852	11929	7299			0.98	No, Vu<V

Verifica a pressoflessione fuori piano D.M. 17-01-18 (N.T.C.)

quota 9.675 Wa 0.05 denominatore 8 γM = 2

Comb.	fd	Sa	σ0	N	M	Mc	Coeff.s.	Verifica
SLV 8	143750	0.45	10024	-6260	272.91	804.56	2.95	Si
SLV 7	143750	0.45	10024	-6260	272.91	804.56	2.95	Si
SLV 12	143750	0.45	10616	-6630	272.91	847.59	3.11	Si
SLV 11	143750	0.45	10616	-6630	272.91	847.59	3.11	Si
SLV 4	143750	0.45	13199	-8244	272.91	1029.48	3.77	Si
SLV 3	143750	0.45	13199	-8244	272.91	1029.48	3.77	Si
SLV 15	143750	0.45	15173	-9477	272.91	1161.98	4.26	Si
SLV 16	143750	0.45	15173	-9477	272.91	1161.98	4.26	Si
SLV 1	143750	0.45	16514	-10314	272.91	1248.81	4.58	Si

Comb.	fd	Sa	σ0	N	M	Mc	Coeff.s.	Verifica
SLV 2	143750	0.45	16514	-10314	272.91	1248.81	4.58	Si

Verifica dei meccanismi locali di collasso con analisi cinematica lineare

forza di aggancio al piano = 0 quota mezzeria = 9.675 Wa = 0.05 Ta = 0.0752

Comb.	N top	N base	V orto	α0	M*	e*	a0*	aLim	Verifica
SLV 13	-7640	-14335	47	0.043	1095.7	0.924	0.67201	12.98863	No
SLV 14	-7640	-14335	47	0.043	1095.7	0.924	0.67201	12.98863	No
SLV 4	-6591	-7324	-52	0.042	990.3	0.918	0.6726	12.98863	No
SLV 3	-6591	-7324	-52	0.042	990.3	0.918	0.6726	12.98863	No
SLV 10	-9249	-16044	65	0.041	1257.8	0.932	0.63359	11.49604	No
SLV 9	-9249	-16044	65	0.041	1257.8	0.932	0.63359	11.49604	No
SLV 2	-7894	-10069	-17	0.046	1121.2	0.925	0.71656	12.98863	No
SLV 1	-7894	-10069	-17	0.046	1121.2	0.925	0.71656	12.98863	No
SLV 7	-4982	-5615	-71	0.041	830	0.907	0.64978	11.49604	No
SLV 8	-4982	-5615	-71	0.041	830	0.907	0.64978	11.49604	No

Tabella dei coefficienti di sicurezza minimi

Stato limite	Coeff.s.	Comb.	Verifica
PF_SLU	13.325	SLU 77	Si
V_SLU	4.005	SLU 81	Si
PF_SLV	2.015	SLV 15	Si
V_SLV	0.867	SLV 3	No
PFFP_SLV	2.948	SLV 7	Si
R_SLV	0.052	SLV 13	No

Maschio 224

Verifiche condotte secondo D.M. 17-01-18 (N.T.C.)

Dati geometrici

X ini.	Y ini.	X fin.	Y fin.	Quota i.	Quota.s	l	Sp.	h netta	h ini.	h fin.	a	a.s.,sx	a.s.,dx
-0.134	-3.248	-2.223	-3.248	L5	L6	2.089	0.28	3.55	3.55	3.55			

Caratteristiche del materiale

(Circolare 7 21-01-19 C8.5.I) Muratura in mattoni pieni e malta di calce LC2_Corti

fb	fk	fvk0	fmedio	τ0	fv0	μ	ϕ	fv,lim	E	G	FC
600000			345000	9000	20000	0.58	0.77	32500	320000000	128000000	1.2

Verifica a pressoflessione nel piano secondo D.M. 17-01-18 NTC §7.8.2.2.1 in combinazioni non sismiche, γM = 3

Comb.	Quota	N	M	σ0	Mu	c.s.	Verifica
SLU 42	8.8	-10803	570.22	18467	8727.19	15.305	Si
SLU 42	10.7	-9659	754.3	16511	8045.06	10.666	Si
SLU 44	8.8	-10818	879.12	18491	8735.24	9.936	Si
SLU 44	10.7	-8542	490.67	14602	7324.04	14.927	Si
SLU 49	8.8	-11701	859.98	20002	9222.03	10.724	Si
SLU 49	10.7	-9560	470.85	16341	7983.2	16.955	Si
SLU 2	8.8	-8674	693.67	14827	7411.94	10.685	Si
SLU 2	10.7	-6945	466.01	11872	6197.72	13.299	Si
SLU 40	8.8	-10363	566.6	17714	8471.34	14.951	Si
SLU 40	10.7	-9182	740.84	15696	7743.7	10.453	Si
SLU 46	8.8	-11260	856.37	19248	8983.52	10.49	Si
SLU 46	10.7	-9083	457.39	15526	7679.77	16.79	Si
SLU 47	8.8	-11258	882.73	19245	8982.3	10.176	Si
SLU 47	10.7	-9019	504.13	15418	7638.78	15.152	Si
SLU 31	8.8	-10267	626.37	17550	8414.44	13.434	Si
SLU 31	10.7	-8944	763.11	15288	7589.51	9.945	Si
SLU 51	8.8	-11488	844.66	19638	9108.06	10.783	Si
SLU 51	10.7	-9326	426.97	15942	7835.91	18.353	Si
SLU 34	8.8	-10707	629.99	18303	8672.15	13.766	Si
SLU 34	10.7	-9421	776.57	16104	7895.84	10.168	Si

Verifica a pressoflessione nel piano secondo D.M. 17-01-18 NTC §7.8.2.2.1 in combinazioni sismiche, γM = 2

Comb.	Quota	N	M	σ0	Mu	c.s.	Verifica
SLV 4	8.8	-5144	2609.66	8794	4987.36	1.911	Si
SLV 4	10.7	-2950	-2203.23	5043	2954.96	1.341	Si
SLV 2	8.8	-8096	3005.1	13839	7499.22	2.495	Si
SLV 2	10.7	-5153	-1722.37	8808	4994.76	2.9	Si
SLV 8	8.8	-3090	582.3	5282	3088.21	5.303	Si
SLV 8	10.7	-2508	-1163.23	4288	2528.32	2.174	Si
SLV 7	8.8	-3090	582.3	5282	3088.21	5.303	Si
SLV 7	10.7	-2508	-1163.23	4288	2528.32	2.174	Si
SLV 1	8.8	-8096	3005.1	13839	7499.22	2.495	Si
SLV 1	10.7	-5153	-1722.37	8808	4994.76	2.9	Si
SLV 14	8.8	-12062	-1469.22	20619	10474.39	7.129	Si
SLV 14	10.7	-11230	2851.92	19197	9888.52	3.467	Si
SLV 3	8.8	-5144	2609.66	8794	4987.36	1.911	Si
SLV 3	10.7	-2950	-2203.23	5043	2954.96	1.341	Si
SLV 13	8.8	-12062	-1469.22	20619	10474.39	7.129	Si
SLV 13	10.7	-11230	2851.92	19197	9888.52	3.467	Si
SLV 16	8.8	-9111	-1864.66	15574	8304.69	4.454	Si
SLV 16	10.7	-9028	2371.06	15432	8239.94	3.475	Si
SLV 15	8.8	-9111	-1864.66	15574	8304.69	4.454	Si
SLV 15	10.7	-9028	2371.06	15432	8239.94	3.475	Si

Verifica a taglio nel piano secondo D.M. 17-01-18 (N.T.C.) §7.8.2.2.2 con rottura per scorrimento in combinazioni non sismiche, γM = 3

Comb.	Quota	N	V par	M	σ0	σN	I'	fvd	Vt scorr.	Vt fess.diag.	Vt,lim	c.s.	Verifica
SLU 40	8.8	-10363	-550	566.6		17714	2.0893	7917	4632			8.42	Si
SLU 40	10.7	-9182	-518	740.84		15696	2.0893	7648	4474			8.63	Si
SLU 33	8.8	-10710	-500	603.62		18307	2.0893	7996	4678			9.35	Si
SLU 33	10.7	-9484	-469	729.83		16212	2.0893	7717	4515			9.63	Si
SLU 38	8.8	-10938	-499	591.91		18697	2.0893	8048	4708			9.44	Si
SLU 38	10.7	-9728	-467	699.41		16628	2.0893	7773	4547			9.73	Si
SLU 36	8.8	-11150	-525	607.24		19060	2.0893	8097	4737			9.02	Si
SLU 36	10.7	-9961	-494	743.29		17028	2.0893	7826	4578			9.27	Si
SLU 37	8.8	-10622	-476	529.38		18158	2.0893	7977	4666			9.81	Si
SLU 37	10.7	-9472	-476	563.47		16192	2.0893	7714	4513			9.48	Si
SLU 41	8.8	-10488	-552	507.69		17928	2.0893	7946	4648			8.42	Si
SLU 41	10.7	-9404	-553	618.36		16075	2.0893	7699	4504			8.15	Si
SLU 32	8.8	-10394	-477	541.09		17768	2.0893	7925	4636			9.72	Si
SLU 32	10.7	-9229	-478	593.9		15775	2.0893	7659	4481			9.38	Si
SLU 42	8.8	-10803	-575	570.22		18467	2.0893	8018	4690			8.16	Si
SLU 42	10.7	-9659	-544	754.3		16511	2.0893	7757	4538			8.35	Si
SLU 35	8.8	-10835	-502	544.7		18521	2.0893	8025	4695			9.35	Si
SLU 35	10.7	-9706	-503	607.36		16591	2.0893	7768	4544			9.04	Si
SLU 39	8.8	-10047	-527	504.07		17175	2.0893	7846	4590			8.71	Si
SLU 39	10.7	-8927	-527	604.9		15259	2.0893	7590	4440			8.42	Si

Verifica a taglio nel piano secondo D.M. 17-01-18 (N.T.C.) §7.8.2.2.2 con rottura per scorrimento in combinazioni sismiche, γM = 2

Comb.	Quota	N	V par	M	σ0	σN	I'	fvd	Vt scorr.	Vt fess.diag.	Vt,lim	c.s.	Verifica
SLV 4	8.8	-5144	2601	2609.66		11397	1.6121	10613	4790			1.84	Si
SLV 4	10.7	-2950	2175	-2203.23		11791	0.8937	10691	2675			1.23	Si
SLV 15	8.8	-9111	-4026	-1864.66		15574	2.0893	11448	6697			1.66	Si
SLV 15	10.7	-9028	-3607	2371.06		15432	2.0893	11420	6681			1.85	Si
SLV 3	8.8	-5144	2601	2609.66		11397	1.6121	10613	4790			1.84	Si
SLV 3	10.7	-2950	2175	-2203.23		11791	0.8937	10691	2675			1.23	Si
SLV 2	8.8	-8096	3792	3005.1		14311	2.0203	11196	6333			1.67	Si
SLV 2	10.7	-5153	3372	-1722.37		8808	2.0893	10095	5906			1.75	Si
SLV 1	8.8	-8096	3792	3005.1		14311	2.0203	11196	6333			1.67	Si
SLV 1	10.7	-5153	3372	-1722.37		8808	2.0893	10095	5906			1.75	Si
SLV 11	8.8	-4280	-3097	-759.99		7316	2.0893	9796	5731			1.85	Si
SLV 11	10.7	-4332	-2980	209.06		7404	2.0893	9814	5741			1.93	Si
SLV 12	8.8	-4280	-3097	-759.99		7316	2.0893	9796	5731			1.85	Si
SLV 12	10.7	-4332	-2980	209.06		7404	2.0893	9814	5741			1.93	Si
SLV 16	8.8	-9111	-4026	-1864.66		15574	2.0893	11448	6697			1.66	Si
SLV 16	10.7	-9028	-3607	2371.06		15432	2.0893	11420	6681			1.85	Si
SLV 5	8.8	-12927	2863	1900.44		22097	2.0893	12753	7460			2.61	Si
SLV 5	10.7	-9849	2745	439.63		16836	2.0893	11701	6845			2.49	Si
SLV 6	8.8	-12927	2863	1900.44		22097	2.0893	12753	7460			2.61	Si
SLV 6	10.7	-9849	2745	439.63		16836	2.0893	11701	6845			2.49	Si

Verifica a pressoflessione fuori piano D.M. 17-01-18 (N.T.C.)

quota 9.675 Wa 0.05 denominatore 8 γM = 2

Comb.	fd	Sa	σ0	N	M	Mc	Coeff.s.	Verifica
SLV 7	143750	0.45	6194	-3623	255.62	481.55	1.88	Si
SLV 8	143750	0.45	6194	-3623	255.62	481.55	1.88	Si
SLV 3	143750	0.45	7792	-4558	255.62	597.47	2.34	Si
SLV 4	143750	0.45	7792	-4558	255.62	597.47	2.34	Si
SLV 11	143750	0.45	8678	-5077	255.62	660.27	2.58	Si
SLV 12	143750	0.45	8678	-5077	255.62	660.27	2.58	Si
SLV 2	143750	0.45	11647	-6813	255.62	862.95	3.38	Si
SLV 1	143750	0.45	11647	-6813	255.62	862.95	3.38	Si
SLV 16	143750	0.45	16074	-9403	255.62	1143.29	4.47	Si
SLV 15	143750	0.45	16074	-9403	255.62	1143.29	4.47	Si

Verifica dei meccanismi locali di collasso con analisi cinematica lineare

forza di aggancio al piano = 0 quota mezzeria = 9.675 Wa = 0.05 Ta = 0.0752

Comb.	N top	N base	V orto	α0	M*	e*	a0*	aLim	Verifica
SLV 7	-2826	-2685	-117	0.03	597.5	0.893	0.49256	11.49604	No
SLV 8	-2826	-2685	-117	0.03	597.5	0.893	0.49256	11.49604	No
SLV 12	-3720	-5053	-122	0.031	684.1	0.9	0.49726	11.49604	No
SLV 11	-3720	-5053	-122	0.031	684.1	0.9	0.49726	11.49604	No
SLV 6	-7861	-11719	122	0.034	1097.2	0.928	0.5403	11.49604	No
SLV 5	-7861	-11719	122	0.034	1097.2	0.928	0.5403	11.49604	No
SLV 9	-8754	-14087	116	0.035	1187.4	0.932	0.55195	11.49604	No
SLV 10	-8754	-14087	116	0.035	1187.4	0.932	0.55195	11.49604	No
SLV 15	-6525	-10977	-45	0.043	962.8	0.92	0.6773	12.98863	No
SLV 16	-6525	-10977	-45	0.043	962.8	0.92	0.6773	12.98863	No

Tabella dei coefficienti di sicurezza minimi

Stato limite	Coeff.s.	Comb.	Verifica
PF_SLU	9.936	SLU 44	Si
V_SLU	8.15	SLU 41	Si
PF_SLV	1.341	SLV 3	Si
V_SLV	1.23	SLV 3	Si
PFFP_SLV	1.884	SLV 7	Si
R_SLV	0.043	SLV 7	No

Maschio 225

Verifiche condotte secondo D.M. 17-01-18 (N.T.C.)

Dati geometrici

X ini.	Y ini.	X fin.	Y fin.	Quota i.	Quota.s	l	Sp.	h netta	h ini.	h fin.	a	a.s.,sx	a.s.,dx
-2.889	5.83	-5.105	5.83	L5	L6	2.216	0.28	3.55	3.55	3.55			

Caratteristiche del materiale

(Circolare 7 21-01-19 C8.5.I) Muratura in mattoni pieni e malta di calce LC2_Corti

fb	fk	fvk0	fmedio	τ0	fv0	μ	ϕ	fv,lim	E	G	FC
600000			345000	9000	20000	0.58	0.77	32500	320000000	128000000	1.2

Verifica a pressoflessione nel piano secondo D.M. 17-01-18 NTC §7.8.2.2.1 in combinazioni non sismiche, γM = 3

Comb.	Quota	N	M	σ0	Mu	c.s.	Verifica
SLU 80	8.8	-16609	-1671.72	26768	12355.13	7.391	Si
SLU 80	10.7	-13084	47.68	21087	10744.02	225.355	Si
SLU 78	8.8	-16864	-1680.4	27180	12450.63	7.409	Si
SLU 78	10.7	-13340	26.87	21499	10879.24	404.857	Si
SLU 77	8.8	-16869	-1666.27	27188	12452.53	7.473	Si
SLU 77	10.7	-13356	18.15	21525	10887.5	599.952	Si
SLU 79	8.8	-16614	-1657.59	26777	12357.08	7.455	Si
SLU 79	10.7	-13100	38.95	21113	10752.46	276.047	Si
SLU 71	8.8	-15611	-1580.6	25160	11954.39	7.563	Si
SLU 71	10.7	-12087	84.4	19480	10189.25	120.729	Si
SLU 72	8.8	-15606	-1594.73	25152	11952.21	7.495	Si
SLU 72	10.7	-12071	93.12	19454	10180.12	109.32	Si
SLU 59	8.8	-15322	-1551.32	24695	11830.23	7.626	Si
SLU 59	10.7	-11878	58.2	19144	10067.8	172.975	Si
SLU 57	8.8	-15578	-1559.99	25106	11940.13	7.654	Si
SLU 57	10.7	-12134	37.4	19556	10216.54	273.173	Si
SLU 70	8.8	-15861	-1603.41	25563	12058.93	7.521	Si
SLU 70	10.7	-12327	72.32	19866	10326.7	142.796	Si
SLU 69	8.8	-15866	-1589.28	25572	12061.05	7.589	Si
SLU 69	10.7	-12342	63.59	19892	10335.66	162.527	Si

Verifica a pressoflessione nel piano secondo D.M. 17-01-18 NTC §7.8.2.2.1 in combinazioni sismiche, γM = 2

Comb.	Quota	N	M	σ0	Mu	c.s.	Verifica
SLV 14	8.8	-11947	-2622.95	19255	11151.06	4.251	Si
SLV 14	10.7	-7017	2519.78	11309	7054.75	2.8	Si
SLV 5	8.8	-3399	621.83	5478	3596.99	5.785	Si
SLV 5	10.7	-3625	-787.79	5842	3824.42	4.855	Si
SLV 3	8.8	-9651	569.5	15554	9331.54	16.385	Si
SLV 3	10.7	-9391	-2591.94	15135	9115.84	3.517	Si
SLV 13	8.8	-11947	-2622.95	19255	11151.06	4.251	Si
SLV 13	10.7	-7017	2519.78	11309	7054.75	2.8	Si
SLV 16	8.8	-15831	-3266.81	25514	13877.55	4.248	Si
SLV 16	10.7	-9733	2511.5	15686	9399.47	3.743	Si
SLV 15	8.8	-15831	-3266.81	25514	13877.55	4.248	Si
SLV 15	10.7	-9733	2511.5	15686	9399.47	3.743	Si
SLV 4	8.8	-9651	569.5	15554	9331.54	16.385	Si
SLV 4	10.7	-9391	-2591.94	15135	9115.84	3.517	Si
SLV 6	8.8	-3399	621.83	5478	3596.99	5.785	Si
SLV 6	10.7	-3625	-787.79	5842	3824.42	4.855	Si
SLV 2	8.8	-5767	1213.37	9294	5903.49	4.865	Si
SLV 2	10.7	-6674	-2583.65	10757	6743.94	2.61	Si
SLV 1	8.8	-5767	1213.37	9294	5903.49	4.865	Si
SLV 1	10.7	-6674	-2583.65	10757	6743.94	2.61	Si

Verifica a taglio nel piano secondo D.M. 17-01-18 (N.T.C.) §7.8.2.2.2 con rottura per scorrimento in combinazioni non sismiche, γM = 3

Comb.	Quota	N	V par	M	σ0	σN	l'	fvd	Vt scorr.	Vt fess.diag.	Vt,lim	c.s.	Verifica
SLU 78	8.8	-16864	-1356	-1680.4		27180	2.216	9180	5696			4.2	Si
SLU 78	10.7	-13340	-1346	26.87		21499	2.216	8422	5226			3.88	Si
SLU 69	8.8	-15866	-1333	-1589.28		25572	2.216	8965	5563			4.17	Si
SLU 69	10.7	-12342	-1322	63.59		19892	2.216	8208	5093			3.85	Si
SLU 49	8.8	-14575	-1267	-1483		23490	2.216	8688	5390			4.26	Si
SLU 49	10.7	-11121	-1260	82.85		17923	2.216	7945	4930			3.91	Si
SLU 80	8.8	-16609	-1364	-1671.72		26768	2.216	9125	5662			4.15	Si
SLU 80	10.7	-13084	-1354	47.68		21087	2.216	8367	5192			3.83	Si
SLU 50	8.8	-14325	-1257	-1460.19		23087	2.216	8634	5357			4.26	Si
SLU 50	10.7	-10881	-1248	94.93		17536	2.216	7894	4898			3.92	Si
SLU 79	8.8	-16614	-1346	-1657.59		26777	2.216	9126	5662			4.21	Si
SLU 79	10.7	-13100	-1334	38.95		21113	2.216	8371	5194			3.89	Si
SLU 71	8.8	-15611	-1341	-1580.6		25160	2.216	8910	5529			4.12	Si
SLU 71	10.7	-12087	-1330	84.4		19480	2.216	8153	5059			3.8	Si
SLU 72	8.8	-15606	-1358	-1594.73		25152	2.216	8909	5528			4.07	Si
SLU 72	10.7	-12071	-1349	93.12		19454	2.216	8149	5056			3.75	Si
SLU 51	8.8	-14320	-1274	-1474.33		23078	2.216	8633	5356			4.2	Si
SLU 51	10.7	-10865	-1267	103.65		17511	2.216	7890	4896			3.86	Si
SLU 70	8.8	-15861	-1350	-1603.41		25563	2.216	8964	5562			4.12	Si
SLU 70	10.7	-12327	-1342	72.32		19866	2.216	8204	5091			3.79	Si

Verifica a taglio nel piano secondo D.M. 17-01-18 (N.T.C.) §7.8.2.2.2 con rottura per scorrimento in combinazioni sismiche, γM = 2

Comb.	Quota	N	V par	M	σ0	σN	l'	fvd	Vt scorr.	Vt fess.diag.	Vt,lim	c.s.	Verifica
SLV 12	8.8	-18199	-5383	-2675.28		29330	2.216	14199	8810			1.64	Si
SLV 12	10.7	-12782	-4764	715.63		20601	2.216	12453	7727			1.62	Si
SLV 2	8.8	-5767	4644	1213.37		9294	2.216	10192	6324			1.36	Si
SLV 2	10.7	-6674	3880	-2583.65		11022	2.1626	10538	6381			1.64	Si
SLV 11	8.8	-18199	-5383	-2675.28		29330	2.216	14199	8810			1.64	Si
SLV 11	10.7	-12782	-4764	715.63		20601	2.216	12453	7727			1.62	Si
SLV 15	8.8	-15831	-6271	-3266.81		25514	2.216	13436	8337			1.33	Si
SLV 15	10.7	-9733	-5489	2511.5		15686	2.216	11471	7117			1.3	Si
SLV 5	8.8	-3399	3757	621.83		5478	2.216	9429	5850			1.56	Si
SLV 5	10.7	-3625	3155	-787.79		5842	2.216	9502	5896			1.87	Si

Comb.	Quota	N	V par	M	σ0	σN	l'	fvd	Vt scorr.	Vt fess.diag.	Vt,lim	c.s.	Verifica
SLV 16	8.8	-15831	-6271	-3266.81		25514	2.216	13436	8337			1.33	Si
SLV 16	10.7	-9733	-5489	2511.5		15686	2.216	11471	7117			1.3	Si
SLV 14	8.8	-11947	-4337	-2622.95		19255	2.216	12184	7560			1.74	Si
SLV 14	10.7	-7017	-3804	2519.78		11309	2.216	10595	6574			1.73	Si
SLV 6	8.8	-3399	3757	621.83		5478	2.216	9429	5850			1.56	Si
SLV 6	10.7	-3625	3155	-787.79		5842	2.216	9502	5896			1.87	Si
SLV 13	8.8	-11947	-4337	-2622.95		19255	2.216	12184	7560			1.74	Si
SLV 13	10.7	-7017	-3804	2519.78		11309	2.216	10595	6574			1.73	Si
SLV 1	8.8	-5767	4644	1213.37		9294	2.216	10192	6324			1.36	Si
SLV 1	10.7	-6674	3880	-2583.65		11022	2.1626	10538	6381			1.64	Si

Verifica a pressoflessione fuori piano D.M. 17-01-18 (N.T.C.)

quota 9.675 Wa 0.05 denominatore 8 γM = 2

Comb.	fd	Sa	σ0	N	M	Mc	Coeff.s.	Verifica
SLV 5	143750	0.45	6810	-4225	271.12	558.58	2.06	Si
SLV 6	143750	0.45	6810	-4225	271.12	558.58	2.06	Si
SLV 10	143750	0.45	7902	-4903	271.12	642.05	2.37	Si
SLV 9	143750	0.45	7902	-4903	271.12	642.05	2.37	Si
SLV 1	143750	0.45	11292	-7006	271.12	890.24	3.28	Si
SLV 2	143750	0.45	11292	-7006	271.12	890.24	3.28	Si
SLV 13	143750	0.45	14934	-9266	271.12	1138.67	4.2	Si
SLV 14	143750	0.45	14934	-9266	271.12	1138.67	4.2	Si
SLV 4	143750	0.45	16226	-10068	271.12	1222.33	4.51	Si
SLV 3	143750	0.45	16226	-10068	271.12	1222.33	4.51	Si

Verifica dei meccanismi locali di collasso con analisi cinematica lineare

forza di aggancio al piano = 0 quota mezzeria = 9.675 Wa = 0.05 Ta = 0.0752

Comb.	N top	N base	V orto	α0	M*	e*	a0*	aLim	Verifica
SLV 9	-3446	-5134	568	0	676.9	0.896	0	11.49604	No
SLV 6	-2936	-4394	574	0	627.9	0.893	0	11.49604	No
SLV 5	-2936	-4394	574	0	627.9	0.893	0	11.49604	No
SLV 10	-3446	-5134	568	0	676.9	0.896	0	11.49604	No
SLV 7	-10550	-15958	-568	0	1387.2	0.938	0.00597	11.49604	No
SLV 8	-10550	-15958	-568	0	1387.2	0.938	0.00597	11.49604	No
SLV 12	-11060	-16698	-573	0.001	1438.8	0.939	0.02259	11.49604	No
SLV 11	-11060	-16698	-573	0.001	1438.8	0.939	0.02259	11.49604	No
SLV 1	-5006	-7578	181	0.025	830.1	0.908	0.39508	12.98863	No
SLV 2	-5006	-7578	181	0.025	830.1	0.908	0.39508	12.98863	No

Tabella dei coefficienti di sicurezza minimi

Stato limite	Coeff.s.	Comb.	Verifica
PF_SLU	7.391	SLU 80	Si
V_SLU	3.747	SLU 72	Si
PF_SLV	2.61	SLV 1	Si
V_SLV	1.297	SLV 15	Si
PFFP_SLV	2.06	SLV 5	Si
R_SLV	0	SLV 5	No

Maschio 226

Verifiche condotte secondo D.M. 17-01-18 (N.T.C.)

Dati geometrici

X ini.	Y ini.	X fin.	Y fin.	Quota i.	Quota.s	l	Sp.	h netta	h ini.	h fin.	a	a.s.,sx	a.s.,dx
-0.134	5.83	-1.889	5.83	L5	L6	1.755	0.28	3.55	3.55	3.55			

Caratteristiche del materiale

(Circolare 7 21-01-19 C8.5.I) Muratura in mattoni pieni e malta di calce LC2_Corti

fb	fk	fvk0	fmedio	τ0	fv0	μ	ϕ	fv,lim	E	G	FC
600000			345000	9000	20000	0.58	0.77	32500	320000000	128000000	1.2

Verifica a pressoflessione nel piano secondo D.M. 17-01-18 NTC §7.8.2.2.1 in combinazioni non sismiche, γM = 3

Comb.	Quota	N	M	σ0	Mu	c.s.	Verifica
SLU 36	8.8	-10093	-727.04	20535	6625.58	9.113	Si
SLU 36	10.7	-10729	1636.34	21829	6893.57	4.213	Si
SLU 37	8.8	-9889	-725.2	20120	6536.05	9.013	Si
SLU 37	10.7	-10512	1620.45	21388	6804.18	4.199	Si
SLU 83	8.8	-11675	-808	23753	7259.18	8.984	Si
SLU 83	10.7	-12119	1802.99	24657	7417.28	4.114	Si
SLU 84	8.8	-11695	-818.64	23794	7266.53	8.876	Si
SLU 84	10.7	-12131	1805.45	24681	7421.33	4.111	Si
SLU 79	8.8	-11874	-794.51	24158	7331.1	9.227	Si
SLU 79	10.7	-12263	1830.49	24950	7466.73	4.079	Si
SLU 80	8.8	-11894	-805.15	24199	7338.28	9.114	Si
SLU 80	10.7	-12275	1832.95	24974	7470.71	4.076	Si
SLU 78	8.8	-12078	-796.35	24573	7402.92	9.296	Si
SLU 78	10.7	-12480	1846.38	25391	7539.47	4.083	Si
SLU 77	8.8	-12058	-785.71	24532	7395.9	9.413	Si
SLU 77	10.7	-12468	1843.92	25367	7535.59	4.087	Si
SLU 38	8.8	-9910	-735.84	20161	6544.97	8.895	Si
SLU 38	10.7	-10524	1622.91	21412	6809.06	4.196	Si
SLU 35	8.8	-10073	-716.4	20494	6616.82	9.236	Si
SLU 35	10.7	-10718	1633.88	21805	6888.8	4.216	Si

Verifica a pressoflessione nel piano secondo D.M. 17-01-18 NTC §7.8.2.2.1 in combinazioni sismiche, γM = 2

Comb.	Quota	N	M	σ0	Mu	c.s.	Verifica
SLV 12	8.8	-12430	-855.61	25290	8652	10.112	Si
SLV 12	10.7	-12806	2962.58	26053	8843.02	2.985	Si
SLV 2	8.8	-5971	1126.61	12149	4719.91	4.189	Si
SLV 2	10.7	-3961	-1267	8060	3247.64	2.563	Si
SLV 1	8.8	-5971	1126.61	12149	4719.91	4.189	Si
SLV 1	10.7	-3961	-1267	8060	3247.64	2.563	Si
SLV 13	8.8	-7342	-2072.23	14938	5656.48	2.73	Si
SLV 13	10.7	-9045	2642.15	18403	6743.36	2.552	Si
SLV 11	8.8	-12430	-855.61	25290	8652	10.112	Si
SLV 11	10.7	-12806	2962.58	26053	8843.02	2.985	Si
SLV 16	8.8	-9912	-2027.45	20166	7263.99	3.583	Si
SLV 16	10.7	-11602	3421.52	23605	8215.95	2.401	Si
SLV 14	8.8	-7342	-2072.23	14938	5656.48	2.73	Si
SLV 14	10.7	-9045	2642.15	18403	6743.36	2.552	Si
SLV 5	8.8	-3453	-45.23	7025	2856.48	63.157	Si
SLV 5	10.7	-2758	-808.06	5611	2309.44	2.858	Si
SLV 6	8.8	-3453	-45.23	7025	2856.48	63.157	Si
SLV 6	10.7	-2758	-808.06	5611	2309.44	2.858	Si
SLV 15	8.8	-9912	-2027.45	20166	7263.99	3.583	Si
SLV 15	10.7	-11602	3421.52	23605	8215.95	2.401	Si

Verifica a taglio nel piano secondo D.M. 17-01-18 (N.T.C.) §7.8.2.2.2 con rottura per scorrimento in combinazioni non sismiche, γM = 3

Comb.	Quota	N	V par	M	σ0	σN	l'	fvd	Vt scorr.	Vt fess.diag.	Vt,lim	c.s.	Verifica
SLU 41	8.8	-9691	-2312	-738.69		19716	1.7554	8184	4023			1.74	Si
SLU 41	10.7	-10368	-2312	1592.95		21095	1.7554	8368	4113			1.78	Si
SLU 79	8.8	-11874	-2557	-794.51		24158	1.7554	8777	4314			1.69	Si
SLU 79	10.7	-12263	-2557	1830.49		24950	1.7554	8882	4366			1.71	Si
SLU 80	8.8	-11894	-2562	-805.15		24199	1.7554	8782	4317			1.68	Si
SLU 80	10.7	-12275	-2558	1832.95		24974	1.7554	8885	4367			1.71	Si
SLU 78	8.8	-12078	-2574	-796.35		24573	1.7554	8832	4341			1.69	Si
SLU 78	10.7	-12480	-2570	1846.38		25391	1.7554	8941	4395			1.71	Si
SLU 82	8.8	-11230	-2439	-774.51		22848	1.7554	8602	4228			1.73	Si
SLU 82	10.7	-11546	-2435	1688.06		23490	1.7554	8688	4270			1.75	Si
SLU 81	8.8	-11210	-2434	-763.87		22807	1.7554	8597	4225			1.74	Si
SLU 81	10.7	-11534	-2434	1685.6		23467	1.7554	8684	4269			1.75	Si
SLU 83	8.8	-11675	-2575	-808		23753	1.7554	8723	4287			1.67	Si
SLU 83	10.7	-12119	-2575	1802.99		24657	1.7554	8843	4347			1.69	Si
SLU 77	8.8	-12058	-2569	-785.71		24532	1.7554	8826	4338			1.69	Si
SLU 77	10.7	-12468	-2569	1843.92		25367	1.7554	8938	4393			1.71	Si
SLU 42	8.8	-9711	-2317	-749.33		19757	1.7554	8190	4025			1.74	Si
SLU 42	10.7	-10380	-2313	1595.41		21118	1.7554	8371	4115			1.78	Si
SLU 84	8.8	-11695	-2580	-818.64		23794	1.7554	8728	4290			1.66	Si
SLU 84	10.7	-12131	-2576	1805.45		24681	1.7554	8846	4348			1.69	Si

Verifica a taglio nel piano secondo D.M. 17-01-18 (N.T.C.) §7.8.2.2.2 con rottura per scorrimento in combinazioni sismiche, γM = 2

Comb.	Quota	N	V par	M	σ0	σN	l'	fvd	Vt scorr.	Vt fess.diag.	Vt,lim	c.s.	Verifica
SLV 1	8.8	-5971	1849	1126.61		12149	1.7554	10763	5290			2.86	Si
SLV 1	10.7	-3961	999	-1267		8454	1.6736	10024	4697			4.7	Si
SLV 15	8.8	-9912	-4836	-2027.45		20166	1.7554	12367	6078			1.26	Si
SLV 15	10.7	-11602	-3986	3421.52		23699	1.7484	13073	6400			1.61	Si
SLV 2	8.8	-5971	1849	1126.61		12149	1.7554	10763	5290			2.86	Si
SLV 2	10.7	-3961	999	-1267		8454	1.6736	10024	4697			4.7	Si
SLV 13	8.8	-7342	-4135	-2072.23		14938	1.7554	11321	5564			1.35	Si
SLV 13	10.7	-9045	-4010	2642.15		18403	1.7554	12014	5905			1.47	Si
SLV 14	8.8	-7342	-4135	-2072.23		14938	1.7554	11321	5564			1.35	Si
SLV 14	10.7	-9045	-4010	2642.15		18403	1.7554	12014	5905			1.47	Si
SLV 10	8.8	-3864	-1222	-1004.88		7862	1.7554	9906	4869			3.98	Si
SLV 10	10.7	-4283	-2286	364.69		8714	1.7554	10076	4953			2.17	Si
SLV 12	8.8	-12430	-3559	-855.61		25290	1.7554	13391	6582			1.85	Si
SLV 12	10.7	-12806	-2204	2962.58		26053	1.7554	13544	6657			3.02	Si
SLV 16	8.8	-9912	-4836	-2027.45		20166	1.7554	12367	6078			1.26	Si
SLV 16	10.7	-11602	-3986	3421.52		23699	1.7484	13073	6400			1.61	Si
SLV 11	8.8	-12430	-3559	-855.61		25290	1.7554	13391	6582			1.85	Si
SLV 11	10.7	-12806	-2204	2962.58		26053	1.7554	13544	6657			3.02	Si
SLV 9	8.8	-3864	-1222	-1004.88		7862	1.7554	9906	4869			3.98	Si
SLV 9	10.7	-4283	-2286	364.69		8714	1.7554	10076	4953			2.17	Si

Verifica a pressoflessione fuori piano D.M. 17-01-18 (N.T.C.)

quota 9.675 Wa 0.05 denominatore 8 γM = 2

Comb.	fd	Sa	σ0	N	M	Mc	Coeff.s.	Verifica
SLV 5	143750	0.45	7425	-3649	214.77	479.87	2.23	Si
SLV 6	143750	0.45	7425	-3649	214.77	479.87	2.23	Si
SLV 9	143750	0.45	9531	-4684	214.77	604.66	2.82	Si
SLV 10	143750	0.45	9531	-4684	214.77	604.66	2.82	Si
SLV 2	143750	0.45	10769	-5293	214.77	675.74	3.15	Si
SLV 1	143750	0.45	10769	-5293	214.77	675.74	3.15	Si
SLV 4	143750	0.45	15742	-7737	214.77	943.66	4.39	Si
SLV 3	143750	0.45	15742	-7737	214.77	943.66	4.39	Si
SLV 14	143750	0.45	17788	-8743	214.77	1045.86	4.87	Si
SLV 13	143750	0.45	17788	-8743	214.77	1045.86	4.87	Si

Verifica dei meccanismi locali di collasso con analisi cinematica lineare

forza di aggancio al piano = 0 quota mezzeria = 9.675 Wa = 0.05 Ta = 0.0752

Comb.	N top	N base	V orto	α0	M*	e*	a0*	aLim	Verifica
SLV 6	-2823	-3280	192	0.01	545.3	0.897	0.15973	11.49604	No
SLV 5	-2823	-3280	192	0.01	545.3	0.897	0.15973	11.49604	No
SLV 9	-3461	-4674	187	0.015	607.8	0.903	0.23447	11.49604	No
SLV 10	-3461	-4674	187	0.015	607.8	0.903	0.23447	11.49604	No

Comb.	N top	N base	V orto	α0	M*	e*	a0*	aLim	Verifica
SLV 8	-8293	-11684	-188	0.027	1092.4	0.937	0.41348	11.49604	No
SLV 7	-8293	-11684	-188	0.027	1092.4	0.937	0.41348	11.49604	No
SLV 11	-8931	-13078	-193	0.027	1157	0.94	0.41707	11.49604	No
SLV 12	-8931	-13078	-193	0.027	1157	0.94	0.41707	11.49604	No
SLV 15	-7761	-11763	-65	0.039	1038.6	0.935	0.60742	12.98863	No
SLV 16	-7761	-11763	-65	0.039	1038.6	0.935	0.60742	12.98863	No

Tabella dei coefficienti di sicurezza minimi

Stato limite	Coeff.s.	Comb.	Verifica
PF_SLU	4.076	SLU 80	Si
V_SLU	1.663	SLU 84	Si
PF_SLV	2.401	SLV 15	Si
V_SLV	1.257	SLV 15	Si
PFFP_SLV	2.234	SLV 5	Si
R_SLV	0.014	SLV 5	No

Maschio 227

Verifiche condotte secondo D.M. 17-01-18 (N.T.C.)

Dati geometrici

X ini.	Y ini.	X fin.	Y fin.	Quota i.	Quota.s	l	Sp.	h netta	h ini.	h fin.	a	a.s.,sx	a.s.,dx
-0.134	-3.248	-0.134	5.83	L5	L6	9.078	0.28	3.55	3.55	3.55			

Caratteristiche del materiale

(Circolare 7 21-01-19 C8.5.I) Muratura in mattoni pieni e malta di calce LC2_Corti

fb	fk	fvk0	fmedio	τ0	fv0	μ	ϕ	fv,lim	E	G	FC
600000			345000	9000	20000	0.58	0.77	32500	320000000	128000000	1.2

Verifica a pressoflessione nel piano secondo D.M. 17-01-18 NTC §7.8.2.2.1 in combinazioni non sismiche, γM = 3

Comb.	Quota	N	M	σ0	Mu	c.s.	Verifica
SLU 72	7.9	-59934	13812.17	23579	193295.03	13.995	Si
SLU 72	11.45	-31373	4623.45	12343	120826.52	26.133	Si
SLU 83	7.9	-65352	14612.32	25710	203007.33	13.893	Si
SLU 83	11.45	-33002	4075.84	12983	125919.77	30.894	Si
SLU 77	7.9	-65904	14772.8	25928	203924.53	13.804	Si
SLU 77	11.45	-34193	4031.34	13452	129572.52	32.141	Si
SLU 84	7.9	-65011	14625.74	25576	202433.72	13.841	Si
SLU 84	11.45	-32761	4919.2	12889	125173.17	25.446	Si
SLU 76	7.9	-62709	14213.95	24671	198430.19	13.96	Si
SLU 76	11.45	-31711	5392.26	12476	121892.83	22.605	Si
SLU 59	7.9	-59526	13692.3	23419	192512.85	14.06	Si
SLU 59	11.45	-30869	4614.38	12144	119224.86	25.838	Si
SLU 80	7.9	-64774	14793.91	25483	202033.14	13.657	Si
SLU 80	11.45	-33447	4831.53	13159	127292.79	26.346	Si
SLU 78	7.9	-65563	14786.22	25793	203359.18	13.753	Si
SLU 78	11.45	-33952	4874.7	13357	128838.51	26.43	Si
SLU 79	7.9	-65115	14780.48	25617	202610.28	13.708	Si
SLU 79	11.45	-33688	3988.17	13253	128032.14	32.103	Si
SLU 71	7.9	-60275	13798.75	23713	193944.58	14.055	Si
SLU 71	11.45	-31614	3780.09	12438	121587.79	32.165	Si

Verifica a pressoflessione nel piano secondo D.M. 17-01-18 NTC §7.8.2.2.1 in combinazioni sismiche, γM = 2

Comb.	Quota	N	M	σ0	Mu	c.s.	Verifica
SLV 10	7.9	-44274	-21567.91	17418	172313.76	7.989	Si
SLV 10	11.45	-23950	1333.22	9422	100325.2	75.25	Si
SLV 7	7.9	-43260	41061.49	17019	169007.03	4.116	Si
SLV 7	11.45	-19893	4501.12	7826	84509.07	18.775	Si
SLV 6	7.9	-34018	-19059.19	13383	137495.6	7.214	Si
SLV 6	11.45	-20921	3747.99	8231	88563.97	23.63	Si
SLV 4	7.9	-28060	22946.08	11039	115855.79	5.049	Si
SLV 4	11.45	-16719	7054.76	6578	71802.45	10.178	Si
SLV 12	7.9	-53516	38552.77	21054	201054.63	5.215	Si
SLV 12	11.45	-22921	2086.35	9018	96361.35	46.187	Si
SLV 9	7.9	-44274	-21567.91	17418	172313.76	7.989	Si
SLV 9	11.45	-23950	1333.22	9422	100325.2	75.25	Si
SLV 5	7.9	-34018	-19059.19	13383	137495.6	7.214	Si
SLV 5	11.45	-20921	3747.99	8231	88563.97	23.63	Si
SLV 11	7.9	-53516	38552.77	21054	201054.63	5.215	Si
SLV 11	11.45	-22921	2086.35	9018	96361.35	46.187	Si
SLV 8	7.9	-43260	41061.49	17019	169007.03	4.116	Si
SLV 8	11.45	-19893	4501.12	7826	84509.07	18.775	Si
SLV 3	7.9	-28060	22946.08	11039	115855.79	5.049	Si
SLV 3	11.45	-16719	7054.76	6578	71802.45	10.178	Si

Verifica a taglio nel piano secondo D.M. 17-01-18 (N.T.C.) §7.8.2.2.2 con rottura per scorrimento in combinazioni non sismiche, γM = 3

Comb.	Quota	N	V par	M	σ0	σN	l'	fvd	Vt scorr.	Vt fess.diag.	Vt,lim	c.s.	Verifica
SLU 31	7.9	-50405	-817	11257.27		19830	9.078	8200	20842			25.52	Si
SLU 31	11.45	-24842	-400	4626.5		9773	9.078	6859	17434			43.54	Si
SLU 2	7.9	-40316	-811	9173.92		15861	9.078	7670	19497			24.03	Si
SLU 2	11.45	-20190	-395	4201.27		7943	9.078	6615	16813			42.52	Si
SLU 10	7.9	-45157	-815	10155.66		17765	9.078	7924	20142			24.72	Si
SLU 10	11.45	-22264	-399	4409.35		8759	9.078	6723	17090			42.86	Si
SLU 44	7.9	-50782	-801	11541.69		19978	9.078	8219	20892			26.07	Si
SLU 44	11.45	-25484	-386	4965.52		10026	9.078	6892	17519			45.39	Si
SLU 13	7.9	-46995	-804	10744.57		18488	9.078	8021	20387			25.37	Si
SLU 13	11.45	-23839	-388	4410.86		9379	9.078	6806	17300			44.54	Si

Comb.	Quota	N	V par	M	σ0	σN	l'	fvd	Vt scorr.	Vt fess.diag.	Vt,lim	c.s.	Verifica
SLU 5	7.9	-42154	-800	9762.83		16584	9.078	7767	19742			24.68	Si
SLU 5	11.45	-21765	-385	4202.78		8563	9.078	6697	17023			44.2	Si
SLU 23	7.9	-45564	-813	10275.53		17926	9.078	7946	20197			24.84	Si
SLU 23	11.45	-22769	-397	4418.42		8957	9.078	6750	17157			43.21	Si
SLU 34	7.9	-52243	-805	11846.18		20553	9.078	8296	21087			26.18	Si
SLU 34	11.45	-26418	-390	4628		10393	9.078	6941	17644			45.22	Si
SLU 26	7.9	-47402	-802	10864.44		18649	9.078	8042	20442			25.5	Si
SLU 26	11.45	-24344	-387	4419.92		9577	9.078	6833	17367			44.9	Si
SLU 47	7.9	-52620	-790	12130.6		20702	9.078	8316	21137			26.76	Si
SLU 47	11.45	-27059	-376	4967.03		10645	9.078	6975	17729			47.19	Si

Verifica a taglio nel piano secondo D.M. 17-01-18 (N.T.C.) §7.8.2.2.2 con rottura per scorrimento in combinazioni sismiche, γM = 2

Comb.	Quota	N	V par	M	σ0	σN	l'	fvd	Vt scorr.	Vt fess.diag.	Vt,lim	c.s.	Verifica
SLV 9	7.9	-44274	-15505	-21567.91		17418	9.078	11817	30037			1.94	Si
SLV 9	11.45	-23950	-10503	1333.22		9422	9.078	10218	25972			2.47	Si
SLV 12	7.9	-53516	15588	38552.77		21054	9.078	12544	31885			2.05	Si
SLV 12	11.45	-22921	10595	2086.35		9018	9.078	10137	25766			2.43	Si
SLV 6	7.9	-34018	-15529	-19059.19		13383	9.078	11010	27986			1.8	Si
SLV 6	11.45	-20921	-10539	3747.99		8231	9.078	9979	25366			2.41	Si
SLV 2	7.9	-25287	-4673	4909.88		9948	9.078	10323	26239			5.61	Si
SLV 2	11.45	-17028	-3197	6828.82		6699	9.078	9673	24588			7.69	Si
SLV 11	7.9	-53516	15588	38552.77		21054	9.078	12544	31885			2.05	Si
SLV 11	11.45	-22921	10595	2086.35		9018	9.078	10137	25766			2.43	Si
SLV 1	7.9	-25287	-4673	4909.88		9948	9.078	10323	26239			5.61	Si
SLV 1	11.45	-17028	-3197	6828.82		6699	9.078	9673	24588			7.69	Si
SLV 10	7.9	-44274	-15505	-21567.91		17418	9.078	11817	30037			1.94	Si
SLV 10	11.45	-23950	-10503	1333.22		9422	9.078	10218	25972			2.47	Si
SLV 5	7.9	-34018	-15529	-19059.19		13383	9.078	11010	27986			1.8	Si
SLV 5	11.45	-20921	-10539	3747.99		8231	9.078	9979	25366			2.41	Si
SLV 8	7.9	-43260	15564	41061.49		17019	9.078	11737	29834			1.92	Si
SLV 8	11.45	-19893	10559	4501.12		7826	9.078	9899	25161			2.38	Si
SLV 7	7.9	-43260	15564	41061.49		17019	9.078	11737	29834			1.92	Si
SLV 7	11.45	-19893	10559	4501.12		7826	9.078	9899	25161			2.38	Si

Verifica a pressoflessione fuori piano D.M. 17-01-18 (N.T.C.)

quota 9.675 Wa 0.05 denominatore 8 γM = 2

Comb.	fd	Sa	σ0	N	M	Mc	Coeff.s.	Verifica
SLV 2	143750	0.45	9045	-22991	1110.67	2980.44	2.68	Si
SLV 1	143750	0.45	9045	-22991	1110.67	2980.44	2.68	Si
SLV 4	143750	0.45	9390	-23868	1110.67	3084.77	2.78	Si
SLV 3	143750	0.45	9390	-23868	1110.67	3084.77	2.78	Si
SLV 5	143750	0.45	11121	-28267	1110.67	3597.17	3.24	Si
SLV 6	143750	0.45	11121	-28267	1110.67	3597.17	3.24	Si
SLV 8	143750	0.45	12271	-31192	1110.67	3928.32	3.54	Si
SLV 7	143750	0.45	12271	-31192	1110.67	3928.32	3.54	Si
SLV 10	143750	0.45	13245	-33667	1110.67	4202.4	3.78	Si
SLV 9	143750	0.45	13245	-33667	1110.67	4202.4	3.78	Si

Verifica dei meccanismi locali di collasso con analisi cinematica lineare

forza di aggancio al piano = 0 quota mezzeria = 9.675 Wa = 0.05 Ta = 0.0752

Comb.	N top	N base	V orto	α0	M*	e*	a0*	aLim	Verifica
SLV 13	-27123	-59475	-208	0.043	4060.5	0.919	0.67453	12.98863	No
SLV 14	-27123	-59475	-208	0.043	4060.5	0.919	0.67453	12.98863	No
SLV 16	-26815	-62247	-198	0.043	4029.6	0.918	0.67989	12.98863	No
SLV 15	-26815	-62247	-198	0.043	4029.6	0.918	0.67989	12.98863	No
SLV 4	-16719	-28060	205	0.044	3026.9	0.901	0.71097	12.98863	No
SLV 3	-16719	-28060	205	0.044	3026.9	0.901	0.71097	12.98863	No
SLV 2	-17028	-25287	195	0.044	3057.2	0.901	0.71607	12.98863	No
SLV 1	-17028	-25287	195	0.044	3057.2	0.901	0.71607	12.98863	No
SLV 10	-23950	-44274	-78	0.047	3743.1	0.914	0.74728	11.49604	No
SLV 9	-23950	-44274	-78	0.047	3743.1	0.914	0.74728	11.49604	No

Tabella dei coefficienti di sicurezza minimi

Stato limite	Coeff.s.	Comb.	Verifica
PF_SLU	13.657	SLU 80	Si
V_SLU	24.035	SLU 2	Si
PF_SLV	4.116	SLV 7	Si
V_SLV	1.802	SLV 5	Si
PFFP_SLV	2.683	SLV 1	Si
R_SLV	0.052	SLV 13	No

Maschio 228

Verifiche condotte secondo D.M. 17-01-18 (N.T.C.)

Dati geometrici

X ini.	Y ini.	X fin.	Y fin.	Quota i.	Quota.s	l	Sp.	h netta	h ini.	h fin.	a	a.s.,sx	a.s.,dx
-24.643	-3.254	-24.643	1.321	L6	L7	4.576	0.28	3.15	3.15	3.15			

Caratteristiche del materiale

(Circolare 7 21-01-19 C8.5.I) Muratura in mattoni pieni e malta di calce LC2_Corti

fb	fk	fvk0	fmedio	τ0	fv0	μ	ϕ	fv,lim	E	G	FC
600000			345000	9000	20000	0.58	0.77	32500	320000000	128000000	1.2

Verifica a pressoflessione nel piano secondo D.M. 17-01-18 NTC §7.8.2.2.1 in combinazioni non sismiche, γM = 3

Comb.	Quota	N	M	σ0	Mu	c.s.	Verifica
SLU 41	11.45	-14060	-1099.07	10974	27834.39	25.326	Si
SLU 41	13.55	-5502	-3654.36	4294	11924.41	3.263	Si
SLU 37	11.45	-14124	-1793.55	11024	27940.84	15.579	Si
SLU 37	13.55	-5809	-4134.23	4534	12549.73	3.036	Si
SLU 36	11.45	-14205	-1405.42	11087	28075.89	19.977	Si
SLU 36	13.55	-5766	-3793.14	4500	12462.62	3.286	Si
SLU 38	11.45	-13865	-1607.23	10822	27507.32	17.115	Si
SLU 38	13.55	-5647	-3883.08	4408	12220.8	3.147	Si
SLU 42	11.45	-13801	-912.74	10772	27400.15	30.02	Si
SLU 42	13.55	-5341	-3403.21	4168	11593.31	3.407	Si
SLU 79	11.45	-16957	-1917.03	13235	32491.59	16.949	Si
SLU 79	13.55	-7050	-4411	5503	15039.96	3.41	Si
SLU 30	11.45	-12817	-1709.86	10004	25722.79	15.044	Si
SLU 30	13.55	-5468	-3392.14	4268	11854.43	3.495	Si
SLU 35	11.45	-14464	-1591.74	11289	28505.55	17.908	Si
SLU 35	13.55	-5927	-4044.29	4626	12790.71	3.163	Si
SLU 29	11.45	-13076	-1896.18	10206	26168.21	13.8	Si
SLU 29	13.55	-5629	-3643.29	4394	12184.63	3.344	Si
SLU 16	11.45	-12907	-1707.88	10074	25877.33	15.152	Si
SLU 16	13.55	-5470	-3508.81	4270	11859.61	3.38	Si

Verifica a pressoflessione nel piano secondo D.M. 17-01-18 NTC §7.8.2.2.1 in combinazioni sismiche, γM = 2

Comb.	Quota	N	M	σ0	Mu	c.s.	Verifica
SLV 10	11.45	-10493	-4130.16	8190	22397.33	5.423	Si
SLV 10	13.55	-5220	701.33	4074	11544.26	16.461	Si
SLV 1	11.45	-14611	-2562.41	11404	30309.01	11.828	Si
SLV 1	13.55	-6153	-2955.13	4803	13524.58	4.577	Si
SLV 7	11.45	-12468	3120.83	9731	26253.26	8.412	Si
SLV 7	13.55	-4125	-4613.89	3219	9188.29	1.991	Si
SLV 9	11.45	-10493	-4130.16	8190	22397.33	5.423	Si
SLV 9	13.55	-5220	701.33	4074	11544.26	16.461	Si
SLV 11	11.45	-10581	3654.83	8259	22572.51	6.176	Si
SLV 11	13.55	-3400	-3625.2	2654	7609.79	2.099	Si
SLV 3	11.45	-14638	-226.91	11425	30358.39	133.789	Si
SLV 3	13.55	-5607	-4253.09	4377	12369.3	2.908	Si
SLV 8	11.45	-12468	3120.83	9731	26253.26	8.412	Si
SLV 8	13.55	-4125	-4613.89	3219	9188.29	1.991	Si
SLV 12	11.45	-10581	3654.83	8259	22572.51	6.176	Si
SLV 12	13.55	-3400	-3625.2	2654	7609.79	2.099	Si
SLV 4	11.45	-14638	-226.91	11425	30358.39	133.789	Si
SLV 4	13.55	-5607	-4253.09	4377	12369.3	2.908	Si
SLV 2	11.45	-14611	-2562.41	11404	30309.01	11.828	Si
SLV 2	13.55	-6153	-2955.13	4803	13524.58	4.577	Si

Verifica a taglio nel piano secondo D.M. 17-01-18 (N.T.C.) §7.8.2.2.2 con rottura per scorrimento in combinazioni non sismiche, γM = 3

Comb.	Quota	N	V par	M	σ0	σN	l'	fvd	Vt scorr.	Vt fess.diag.	Vt,lim	c.s.	Verifica
SLU 56	11.45	-16079	2131	-1629.55		12550	4.5758	7229	9262			4.35	Si
SLU 56	13.55	-6830	2099	-3695.64		5331	4.5758	6266	8029			3.83	Si
SLU 78	11.45	-17038	2024	-1528.9		13298	4.5758	7329	9390			4.64	Si
SLU 78	13.55	-7007	2098	-4069.91		5469	4.5758	6285	8052			3.84	Si
SLU 50	11.45	-14692	2139	-1933.99		11467	4.5758	7084	9077			4.24	Si
SLU 50	13.55	-6533	2105	-3294.64		5099	4.5758	6235	7989			3.79	Si
SLU 69	11.45	-16249	2207	-1817.86		12682	4.5758	7247	9284			4.21	Si
SLU 69	13.55	-6989	2172	-3830.12		5455	4.5758	6283	8050			3.71	Si
SLU 71	11.45	-15909	2239	-2019.66		12417	4.5758	7211	9239			4.13	Si
SLU 71	13.55	-6871	2203	-3920.06		5363	4.5758	6271	8034			3.65	Si
SLU 77	11.45	-17297	2232	-1715.22		13500	4.5758	7356	9424			4.22	Si
SLU 77	13.55	-7169	2197	-4321.06		5595	4.5758	6302	8074			3.68	Si
SLU 72	11.45	-15650	2032	-1833.34		12215	4.5758	7184	9204			4.53	Si
SLU 72	13.55	-6709	2104	-3668.91		5237	4.5758	6254	8012			3.81	Si
SLU 80	11.45	-16698	2056	-1730.71		13033	4.5758	7293	9344			4.54	Si
SLU 80	13.55	-6888	2129	-4159.85		5377	4.5758	6272	8036			3.78	Si
SLU 58	11.45	-15739	2164	-1831.36		12285	4.5758	7194	9216			4.26	Si
SLU 58	13.55	-6712	2130	-3785.58		5239	4.5758	6254	8013			3.76	Si
SLU 79	11.45	-16957	2264	-1917.03		13235	4.5758	7320	9379			4.14	Si
SLU 79	13.55	-7050	2228	-4411		5503	4.5758	6289	8058			3.62	Si

Verifica a taglio nel piano secondo D.M. 17-01-18 (N.T.C.) §7.8.2.2.2 con rottura per scorrimento in combinazioni sismiche, γM = 2

Comb.	Quota	N	V par	M	σ0	σN	l'	fvd	Vt scorr.	Vt fess.diag.	Vt,lim	c.s.	Verifica
SLV 3	11.45	-14638	3239	-226.91		11425	4.5758	10618	13604			4.2	Si
SLV 3	13.55	-5607	2931	-4253.09		4377	4.5758	9209	11798			4.03	Si
SLV 11	11.45	-10581	6277	3654.83		8259	4.5758	9985	12793			2.04	Si
SLV 11	13.55	-3400	5063	-3625.2		3313	3.6649	8996	9231			1.82	Si
SLV 7	11.45	-12468	6538	3120.83		9731	4.5758	10280	13170			2.01	Si
SLV 7	13.55	-4125	5360	-4613.89		4199	3.5079	9173	9010			1.68	Si
SLV 6	11.45	-12379	-3755	-4664.16		9662	4.5758	10266	13153			3.5	Si
SLV 6	13.55	-5945	-2571	-287.37		4640	4.5758	9261	11866			4.61	Si
SLV 8	11.45	-12468	6538	3120.83		9731	4.5758	10280	13170			2.01	Si
SLV 8	13.55	-4125	5360	-4613.89		4199	3.5079	9173	9010			1.68	Si
SLV 4	11.45	-14638	3239	-226.91		11425	4.5758	10618	13604			4.2	Si
SLV 4	13.55	-5607	2931	-4253.09		4377	4.5758	9209	11798			4.03	Si
SLV 10	11.45	-10493	-4015	-4130.16		8190	4.5758	9971	12775			3.18	Si
SLV 10	13.55	-5220	-2868	701.33		4074	4.5758	9148	11721			4.09	Si
SLV 5	11.45	-12379	-3755	-4664.16		9662	4.5758	10266	13153			3.5	Si
SLV 5	13.55	-5945	-2571	-287.37		4640	4.5758	9261	11866			4.61	Si
SLV 9	11.45	-10493	-4015	-4130.16		8190	4.5758	9971	12775			3.18	Si
SLV 9	13.55	-5220	-2868	701.33		4074	4.5758	9148	11721			4.09	Si
SLV 12	11.45	-10581	6277	3654.83		8259	4.5758	9985	12793			2.04	Si
SLV 12	13.55	-3400	5063	-3625.2		3313	3.6649	8996	9231			1.82	Si

Verifica a pressoflessione fuori piano D.M. 17-01-18 (N.T.C.)

quota 13.025 Wa 0.05 denominatore 8 γM = 2

Comb.	fd	Sa	σ0	N	M	Mc	Coeff.s.	Verifica
SLV 16	143750	0.52	3366	-4312	510.82	587.07	1.15	Si
SLV 15	143750	0.52	3366	-4312	510.82	587.07	1.15	Si
SLV 13	143750	0.52	3624	-4643	510.82	630.8	1.23	Si
SLV 14	143750	0.52	3624	-4643	510.82	630.8	1.23	Si
SLV 12	143750	0.52	3890	-4983	510.82	675.46	1.32	Si
SLV 11	143750	0.52	3890	-4983	510.82	675.46	1.32	Si
SLV 8	143750	0.52	4597	-5890	510.82	793.58	1.55	Si
SLV 7	143750	0.52	4597	-5890	510.82	793.58	1.55	Si
SLV 10	143750	0.52	4752	-6088	510.82	819.14	1.6	Si
SLV 9	143750	0.52	4752	-6088	510.82	819.14	1.6	Si

Verifica dei meccanismi locali di collasso con analisi cinematica lineare

forza di aggancio al piano = 0 quota mezzeria = 13.025 Wa = 0.05 Ta = 0.0592

Comb.	N top	N base	V orto	α0	M*	e*	a0*	aLim	Verifica
SLV 11	1510	-10581	149	0	0	0	0	10.02695	No, Trazione
SLV 12	1510	-10581	149	0	0	0	0	10.02695	No, Trazione
SLV 7	1513	-12468	1	0	0	0	0	10.02695	No, Trazione
SLV 8	1513	-12468	1	0	0	0	0	10.02695	No, Trazione
SLV 1	-2396	-14611	-313	0.019	879.5	0.893	0.3128	11.09238	No
SLV 2	-2396	-14611	-313	0.019	879.5	0.893	0.3128	11.09238	No
SLV 4	-590	-14638	-248	0.024	755.3	0.943	0.36985	11.09238	No
SLV 3	-590	-14638	-248	0.024	755.3	0.943	0.36985	11.09238	No
SLV 16	-602	-8349	245	0.025	755.8	0.943	0.38161	11.09238	No
SLV 15	-602	-8349	245	0.025	755.8	0.943	0.38161	11.09238	No

Tabella dei coefficienti di sicurezza minimi

Stato limite	Coeff.s.	Comb.	Verifica
PF_SLU	3.036	SLU 37	Si
V_SLU	3.617	SLU 79	Si
PF_SLV	1.991	SLV 7	Si
V_SLV	1.681	SLV 7	Si
PFFP_SLV	1.149	SLV 15	Si
R_SLV	0	SLV 12	No

Maschio 229

Verifiche condotte secondo D.M. 17-01-18 (N.T.C.)

Dati geometrici

X ini.	Y ini.	X fin.	Y fin.	Quota i.	Quota.s	l	Sp.	h netta	h ini.	h fin.	a	a.s.,sx	a.s.,dx
-24.643	2.121	-24.643	5.798	L6	L7	3.676	0.28	3.15	3.15	3.15			

Caratteristiche del materiale

(Circolare 7 21-01-19 C8.5.I) Muratura in mattoni pieni e malta di calce LC2_Corti

fb	fk	fvk0	fmedio	τ0	fv0	μ	ϕ	fv,lim	E	G	FC
600000			345000	9000	20000	0.58	0.77	32500	320000000	128000000	1.2

Verifica a pressoflessione nel piano secondo D.M. 17-01-18 NTC §7.8.2.2.1 in combinazioni non sismiche, γM = 3

Comb.	Quota	N	M	σ0	Mu	c.s.	Verifica
SLU 72	11.45	-13925	1379.6	13527	21345.16	15.472	Si
SLU 72	13.55	-6746	2048.23	6553	11402.44	5.567	Si
SLU 7	11.45	-10714	1061.28	10408	17177.41	16.186	Si
SLU 7	13.55	-5222	1670.23	5073	9001.61	5.389	Si
SLU 30	11.45	-11433	1374.54	11107	18150.75	13.205	Si
SLU 30	13.55	-5636	1812.02	5475	9663.67	5.333	Si
SLU 50	11.45	-12991	1024.4	12621	20180.28	19.7	Si
SLU 50	13.55	-6207	2041.53	6030	10564.32	5.175	Si
SLU 51	11.45	-13026	987.24	12655	20224.52	20.486	Si
SLU 51	13.55	-6231	2022.13	6053	10602.01	5.243	Si
SLU 8	11.45	-10500	1019.33	10201	16883.93	16.564	Si
SLU 8	13.55	-5097	1805.33	4951	8799.31	4.874	Si
SLU 71	11.45	-13890	1416.76	13493	21302.3	15.036	Si
SLU 71	13.55	-6722	2067.63	6530	11365.3	5.497	Si
SLU 9	11.45	-10535	982.18	10234	16931.98	17.239	Si
SLU 9	13.55	-5121	1785.92	4975	8838.17	4.949	Si
SLU 29	11.45	-11399	1411.69	11073	18104.07	12.824	Si
SLU 29	13.55	-5612	1831.42	5452	9625.36	5.256	Si
SLU 6	11.45	-10679	1098.44	10374	17129.63	15.595	Si
SLU 6	13.55	-5198	1689.63	5050	8962.87	5.305	Si

Verifica a pressoflessione nel piano secondo D.M. 17-01-18 NTC §7.8.2.2.1 in combinazioni sismiche, γM = 2

Comb.	Quota	N	M	σ0	Mu	c.s.	Verifica
SLV 7	11.45	-9295	3390.6	9030	15823.36	4.667	Si
SLV 7	13.55	-5486	-1577.91	5330	9644.72	6.112	Si
SLV 8	11.45	-9295	3390.6	9030	15823.36	4.667	Si
SLV 8	13.55	-5486	-1577.91	5330	9644.72	6.112	Si
SLV 6	11.45	-10986	-2865.43	10673	18430.51	6.432	Si
SLV 6	13.55	-4161	2543.42	4042	7395.1	2.908	Si
SLV 11	11.45	-8581	4208.49	8336	14696.57	3.492	Si
SLV 11	13.55	-4929	-974.11	4789	8706.02	8.937	Si
SLV 9	11.45	-10272	-2047.54	9979	17339.04	8.468	Si
SLV 9	13.55	-3604	3147.22	3501	6434.82	2.045	Si
SLV 10	11.45	-10272	-2047.54	9979	17339.04	8.468	Si
SLV 10	13.55	-3604	3147.22	3501	6434.82	2.045	Si

Comb.	Quota	N	M	σ0	Mu	c.s.	Verifica
SLV 12	11.45	-8581	4208.49	8336	14696.57	3.492	Si
SLV 12	13.55	-4929	-974.11	4789	8706.02	8.937	Si
SLV 5	11.45	-10986	-2865.43	10673	18430.51	6.432	Si
SLV 5	13.55	-4161	2543.42	4042	7395.1	2.908	Si
SLV 14	11.45	-8846	1096.28	8594	15117.01	13.789	Si
SLV 14	13.55	-3418	2409.19	3321	6112.61	2.537	Si
SLV 13	11.45	-8846	1096.28	8594	15117.01	13.789	Si
SLV 13	13.55	-3418	2409.19	3321	6112.61	2.537	Si

Verifica a taglio nel piano secondo D.M. 17-01-18 (N.T.C.) §7.8.2.2.2 con rottura per scorrimento in combinazioni non sismiche, γM = 3

Comb.	Quota	N	V par	M	σ0	σN	I'	fvd	Vt scorr.	Vt fess.diag.	Vt,lim	c.s.	Verifica
SLU 71	11.45	-13890	-2215	1416.76		13493	3.6763	7355	7571			3.42	Si
SLU 71	13.55	-6722	-2198	2067.63		6530	3.6763	6426	6615			3.01	Si
SLU 77	11.45	-14754	-2230	1825.31		14333	3.6763	7467	7686			3.45	Si
SLU 77	13.55	-7207	-2214	1812.01		7002	3.6763	6489	6680			3.02	Si
SLU 69	11.45	-14069	-2190	1495.86		13667	3.6763	7378	7595			3.47	Si
SLU 69	13.55	-6823	-2173	1951.94		6629	3.6763	6439	6628			3.05	Si
SLU 70	11.45	-14103	-2207	1458.7		13701	3.6763	7382	7599			3.44	Si
SLU 70	13.55	-6847	-2192	1932.54		6652	3.6763	6442	6632			3.03	Si
SLU 79	11.45	-14575	-2255	1746.2		14160	3.6763	7443	7662			3.4	Si
SLU 79	13.55	-7106	-2238	1927.7		6903	3.6763	6476	6666			2.98	Si
SLU 80	11.45	-14610	-2273	1709.05		14193	3.6763	7448	7667			3.37	Si
SLU 80	13.55	-7130	-2257	1908.3		6927	3.6763	6479	6669			2.96	Si
SLU 58	11.45	-13677	-2147	1353.85		13287	3.6763	7327	7542			3.51	Si
SLU 58	13.55	-6591	-2131	1901.6		6403	3.6763	6409	6597			3.1	Si
SLU 78	11.45	-14789	-2248	1788.15		14367	3.6763	7471	7691			3.42	Si
SLU 78	13.55	-7231	-2232	1792.61		7025	3.6763	6492	6683			2.99	Si
SLU 59	11.45	-13712	-2165	1316.69		13321	3.6763	7332	7547			3.49	Si
SLU 59	13.55	-6615	-2150	1882.2		6426	3.6763	6412	6601			3.07	Si
SLU 72	11.45	-13925	-2233	1379.6		13527	3.6763	7359	7575			3.39	Si
SLU 72	13.55	-6746	-2216	2048.23		6553	3.6763	6429	6618			2.99	Si

Verifica a taglio nel piano secondo D.M. 17-01-18 (N.T.C.) §7.8.2.2.2 con rottura per scorrimento in combinazioni sismiche, γM = 2

Comb.	Quota	N	V par	M	σ0	σN	I'	fvd	Vt scorr.	Vt fess.diag.	Vt,lim	c.s.	Verifica
SLV 10	11.45	-10272	-5470	-2047.54		9979	3.6763	10329	10632			1.94	Si
SLV 10	13.55	-3604	-4504	3147.22		4447	2.8947	9223	7475			1.66	Si
SLV 5	11.45	-10986	-5525	-2865.43		10673	3.6763	10468	10775			1.95	Si
SLV 5	13.55	-4161	-4717	2543.42		4042	3.6763	9142	9410			1.99	Si
SLV 1	11.45	-11228	-2643	-1630.03		10908	3.6763	10515	10824			4.09	Si
SLV 1	13.55	-5274	-2636	396.52		5124	3.6763	9358	9633			3.65	Si
SLV 12	11.45	-8581	2948	4208.49		8336	3.6763	10000	10294			3.49	Si
SLV 12	13.55	-4929	2155	-974.11		4789	3.6763	9291	9564			4.44	Si
SLV 6	11.45	-10986	-5525	-2865.43		10673	3.6763	10468	10775			1.95	Si
SLV 6	13.55	-4161	-4717	2543.42		4042	3.6763	9142	9410			1.99	Si
SLV 11	11.45	-8581	2948	4208.49		8336	3.6763	10000	10294			3.49	Si
SLV 11	13.55	-4929	2155	-974.11		4789	3.6763	9291	9564			4.44	Si
SLV 2	11.45	-11228	-2643	-1630.03		10908	3.6763	10515	10824			4.09	Si
SLV 2	13.55	-5274	-2636	396.52		5124	3.6763	9358	9633			3.65	Si
SLV 8	11.45	-9295	2892	3390.6		9030	3.6763	10139	10437			3.61	Si
SLV 8	13.55	-5486	1942	-1577.91		5330	3.6763	9399	9675			4.98	Si
SLV 7	11.45	-9295	2892	3390.6		9030	3.6763	10139	10437			3.61	Si
SLV 7	13.55	-5486	1942	-1577.91		5330	3.6763	9399	9675			4.98	Si
SLV 9	11.45	-10272	-5470	-2047.54		9979	3.6763	10329	10632			1.94	Si
SLV 9	13.55	-3604	-4504	3147.22		4447	2.8947	9223	7475			1.66	Si

Verifica a pressoflessione fuori piano D.M. 17-01-18 (N.T.C.)

quota 13.025 Wa 0.05 denominatore 8 γM = 2

Comb.	fd	Sa	σ0	N	M	Mc	Coeff.s.	Verifica
SLV 13	143750	0.52	4473	-4605	410.41	621.05	1.51	Si
SLV 14	143750	0.52	4473	-4605	410.41	621.05	1.51	Si
SLV 16	143750	0.52	4674	-4811	410.41	647.84	1.58	Si
SLV 15	143750	0.52	4674	-4811	410.41	647.84	1.58	Si
SLV 9	143750	0.52	4851	-4994	410.41	671.34	1.64	Si
SLV 10	143750	0.52	4851	-4994	410.41	671.34	1.64	Si
SLV 5	143750	0.52	5376	-5534	410.41	740.63	1.8	Si
SLV 6	143750	0.52	5376	-5534	410.41	740.63	1.8	Si
SLV 12	143750	0.52	5521	-5683	410.41	759.66	1.85	Si
SLV 11	143750	0.52	5521	-5683	410.41	759.66	1.85	Si

Verifica dei meccanismi locali di collasso con analisi cinematica lineare

forza di aggancio al piano = 0 quota mezzeria = 13.025 Wa = 0.05 Ta = 0.0592

Comb.	N top	N base	V orto	α0	M*	e*	a0*	aLim	Verifica
SLV 1	-1566	-11228	-301	0.006	677.6	0.898	0.09977	11.09238	No
SLV 2	-1566	-11228	-301	0.006	677.6	0.898	0.09977	11.09238	No
SLV 15	-1420	-8339	249	0.017	666.3	0.901	0.27174	11.09238	No
SLV 16	-1420	-8339	249	0.017	666.3	0.901	0.27174	11.09238	No
SLV 4	-2126	-10721	-251	0.02	723.5	0.891	0.3314	11.09238	No
SLV 3	-2126	-10721	-251	0.02	723.5	0.891	0.3314	11.09238	No
SLV 14	-859	-8846	199	0.026	627.4	0.919	0.41066	11.09238	No
SLV 13	-859	-8846	199	0.026	627.4	0.919	0.41066	11.09238	No
SLV 5	-664	-10986	-184	0.029	616.1	0.93	0.4562	10.02695	No
SLV 6	-664	-10986	-184	0.029	616.1	0.93	0.4562	10.02695	No

Tabella dei coefficienti di sicurezza minimi

Stato limite	Coeff.s.	Comb.	Verifica
PF_SLU	4.874	SLU 8	Si
V_SLU	2.955	SLU 80	Si
PF_SLV	2.045	SLV 9	Si
V_SLV	1.66	SLV 9	Si

Stato limite	Coeff.s.	Comb.	Verifica
PFFP_SLV	1.513	SLV 13	Si
R_SLV	0.009	SLV 1	No

Maschio 230

Verifiche condotte secondo D.M. 17-01-18 (N.T.C.)

Dati geometrici

X ini.	Y ini.	X fin.	Y fin.	Quota i.	Quota.s	l	Sp.	h netta	h ini.	h fin.	a	a.s.,sx	a.s.,dx
-22.849	5.798	-24.643	5.798	L6	L7	1.794	0.28	3.15	3.15	3.15			

Caratteristiche del materiale

(Circolare 7 21-01-19 C8.5.I) Muratura in mattoni pieni e malta di calce LC2_Corti

fb	fk	fvk0	fmedio	τ0	fv0	μ	ϕ	fv,lim	E	G	FC
600000			345000	9000	20000	0.58	0.77	32500	320000000	128000000	1.2

Verifica a pressoflessione nel piano secondo D.M. 17-01-18 NTC §7.8.2.2.1 in combinazioni non sismiche, γM = 3

Comb.	Quota	N	M	σ0	Mu	c.s.	Verifica
SLU 18	12.35	-2904	1285.5	5779	2420.34	1.883	Si
SLU 18	14.25	-2745	-238.75	5463	2297.39	9.622	Si
SLU 40	12.35	-2985	1561.43	5942	2483	1.59	Si
SLU 40	14.25	-3120	-273.22	6209	2585.59	9.463	Si
SLU 34	12.35	-3589	1563.6	7143	2937.57	1.879	Si
SLU 34	14.25	-3738	-397.47	7439	3047.31	7.667	Si
SLU 82	12.35	-3892	1748.43	7747	3160.16	1.807	Si
SLU 82	14.25	-3763	-344.78	7490	3065.99	8.893	Si
SLU 19	12.35	-2868	1308.17	5708	2392.82	1.829	Si
SLU 19	14.25	-2732	-240.94	5437	2287.37	9.494	Si
SLU 41	12.35	-3572	1637.65	7109	2925.13	1.786	Si
SLU 41	14.25	-3806	-382.82	7575	3097.24	8.091	Si
SLU 42	12.35	-3536	1660.31	7038	2898.66	1.746	Si
SLU 42	14.25	-3793	-385.01	7550	3087.82	8.02	Si
SLU 39	12.35	-3021	1538.77	6013	2510.34	1.631	Si
SLU 39	14.25	-3133	-271.03	6235	2595.39	9.576	Si
SLU 81	12.35	-3928	1725.77	7818	3186.07	1.846	Si
SLU 81	14.25	-3776	-342.6	7516	3075.43	8.977	Si
SLU 31	12.35	-3038	1464.72	6046	2523.17	1.723	Si
SLU 31	14.25	-3064	-285.68	6099	2543.45	8.903	Si

Verifica a pressoflessione nel piano secondo D.M. 17-01-18 NTC §7.8.2.2.1 in combinazioni sismiche, γM = 2

Comb.	Quota	N	M	σ0	Mu	c.s.	Verifica
SLV 2	12.35	-1616	1780.53	0	0	0	No, e>l/2
SLV 2	14.25	-2296	-518.19	4569	1982.61	3.826	Si
SLV 5	12.35	-858	2400.93	0	0	0	No, e>l/2
SLV 5	14.25	-2853	-633.67	5678	2440.76	3.852	Si
SLV 3	12.35	-2820	1038.78	5612	2413.68	2.324	Si
SLV 3	14.25	-2129	-330.88	4237	1843.9	5.573	Si
SLV 14	12.35	-3462	1080.6	6890	2930.59	2.712	Si
SLV 14	14.25	-3333	-223.76	6633	2827.82	12.638	Si
SLV 6	12.35	-858	2400.93	0	0	0	No, e>l/2
SLV 6	14.25	-2853	-633.67	5678	2440.76	3.852	Si
SLV 10	12.35	-1412	2190.95	0	0	0	No, e>l/2
SLV 10	14.25	-3164	-545.34	6298	2692.55	4.937	Si
SLV 13	12.35	-3462	1080.6	6890	2930.59	2.712	Si
SLV 13	14.25	-3333	-223.76	6633	2827.82	12.638	Si
SLV 9	12.35	-1412	2190.95	0	0	0	No, e>l/2
SLV 9	14.25	-3164	-545.34	6298	2692.55	4.937	Si
SLV 4	12.35	-2820	1038.78	5612	2413.68	2.324	Si
SLV 4	14.25	-2129	-330.88	4237	1843.9	5.573	Si
SLV 1	12.35	-1616	1780.53	0	0	0	No, e>l/2
SLV 1	14.25	-2296	-518.19	4569	1982.61	3.826	Si

Verifica a taglio nel piano secondo D.M. 17-01-18 (N.T.C.) §7.8.2.2.2 con rottura per scorrimento in combinazioni non sismiche, γM = 3

Comb.	Quota	N	V par	M	σ0	σN	l'	fvd	Vt scorr.	Vt fess.diag.	Vt,lim	c.s.	Verifica
SLU 41	12.35	-3572	2022	1637.65		9692	1.3162	6848	2524			1.25	Si
SLU 41	14.25	-3806	2057	-382.82		7575	1.7944	6566	3299			1.6	Si
SLU 31	12.35	-3038	1785	1464.72		8714	1.2451	6717	2342			1.31	Si
SLU 31	14.25	-3064	1807	-285.68		6099	1.7944	6369	3200			1.77	Si
SLU 84	12.35	-4444	2305	1847.31		10987	1.4444	7020	2839			1.23	Si
SLU 84	14.25	-4437	2344	-456.57		8831	1.7944	6733	3383			1.44	Si
SLU 42	12.35	-3536	2047	1660.31		9843	1.2831	6868	2467			1.21	Si
SLU 42	14.25	-3793	2080	-385.01		7550	1.7944	6562	3297			1.59	Si
SLU 82	12.35	-3892	2138	1748.43		10343	1.344	6935	2610			1.22	Si
SLU 82	14.25	-3763	2167	-344.78		7490	1.7944	6554	3293			1.52	Si
SLU 83	12.35	-4479	2281	1824.65		10886	1.4695	7007	2883			1.26	Si
SLU 83	14.25	-4450	2321	-454.38		8856	1.7944	6736	3385			1.46	Si
SLU 40	12.35	-2985	1880	1561.43		9498	1.1225	6822	2144			1.14	Si
SLU 40	14.25	-3120	1903	-273.22		6209	1.7944	6383	3207			1.69	Si
SLU 39	12.35	-3021	1855	1538.77		9273	1.1635	6792	2213			1.19	Si
SLU 39	14.25	-3133	1880	-271.03		6235	1.7944	6387	3209			1.71	Si
SLU 81	12.35	-3928	2114	1725.77		10213	1.3736	6917	2660			1.26	Si
SLU 81	14.25	-3776	2144	-342.6		7516	1.7944	6558	3295			1.54	Si
SLU 76	12.35	-4496	2210	1750.61		10540	1.5235	6961	2969			1.34	Si
SLU 76	14.25	-4382	2248	-469.03		8721	1.7944	6718	3376			1.5	Si

Verifica a taglio nel piano secondo D.M. 17-01-18 (N.T.C.) §7.8.2.2.2 con rottura per scorrimento in combinazioni sismiche, γM = 2

Comb.	Quota	N	V par	M	σ0	σN	l'	fvd	Vt scorr.	Vt fess.diag.	Vt,lim	c.s.	Verifica
SLV 14	12.35	-3462	983	1080.6		7044	1.7551	9742	4788			4.87	Si
SLV 14	14.25	-3333	2049	-223.76		6633	1.7944	9660	4853			2.37	Si
SLV 3	12.35	-2820	1720	1038.78		6348	1.5864	9603	4266			2.48	Si
SLV 3	14.25	-2129	699	-330.88		4237	1.7944	9181	4613			6.6	Si
SLV 1	12.35	-1616	2653	1780.53		0	0	8333	0			0	No, Vu<V
SLV 1	14.25	-2296	1311	-518.19		4569	1.7944	9247	4646			3.54	Si
SLV 13	12.35	-3462	983	1080.6		7044	1.7551	9742	4788			4.87	Si
SLV 13	14.25	-3333	2049	-223.76		6633	1.7944	9660	4853			2.37	Si
SLV 5	12.35	-858	3156	2400.93		0	0	8333	0			0	No, Vu<V
SLV 5	14.25	-2853	2284	-633.67		5678	1.7944	9469	4758			2.08	Si
SLV 6	12.35	-858	3156	2400.93		0	0	8333	0			0	No, Vu<V
SLV 6	14.25	-2853	2284	-633.67		5678	1.7944	9469	4758			2.08	Si
SLV 2	12.35	-1616	2653	1780.53		0	0	8333	0			0	No, Vu<V
SLV 2	14.25	-2296	1311	-518.19		4569	1.7944	9247	4646			3.54	Si
SLV 9	12.35	-1412	2655	2190.95		0	0	8333	0			0	No, Vu<V
SLV 9	14.25	-3164	2506	-545.34		6298	1.7944	9593	4820			1.92	Si
SLV 4	12.35	-2820	1720	1038.78		6348	1.5864	9603	4266			2.48	Si
SLV 4	14.25	-2129	699	-330.88		4237	1.7944	9181	4613			6.6	Si
SLV 10	12.35	-1412	2655	2190.95		0	0	8333	0			0	No, Vu<V
SLV 10	14.25	-3164	2506	-545.34		6298	1.7944	9593	4820			1.92	Si

Verifica a pressoflessione fuori piano D.M. 17-01-18 (N.T.C.)

quota 13.025 Wa 0.05 denominatore 8 γM = 2

Comb.	fd	Sa	σ0	N	M	Mc	Coeff.s.	Verifica
SLV 1	143750	0.52	3463	-1740	200.32	236.67	1.18	Si
SLV 2	143750	0.52	3463	-1740	200.32	236.67	1.18	Si
SLV 5	143750	0.52	3744	-1881	200.32	255.3	1.27	Si
SLV 6	143750	0.52	3744	-1881	200.32	255.3	1.27	Si
SLV 3	143750	0.52	4469	-2245	200.32	302.85	1.51	Si
SLV 4	143750	0.52	4469	-2245	200.32	302.85	1.51	Si
SLV 10	143750	0.52	4992	-2508	200.32	336.76	1.68	Si
SLV 9	143750	0.52	4992	-2508	200.32	336.76	1.68	Si
SLV 7	143750	0.52	7098	-3566	200.32	470.28	2.35	Si
SLV 8	143750	0.52	7098	-3566	200.32	470.28	2.35	Si

Verifica dei meccanismi locali di collasso con analisi cinematica lineare

forza di aggancio al piano = 0 quota mezzeria = 13.025 Wa = 0.05 Ta = 0.0592

Comb.	N top	N base	V orto	α0	M*	e*	a0*	aLim	Verifica
SLV 12	-1552	-6238	204	0	398.9	0.889	0	10.02695	No
SLV 11	-1552	-6238	204	0	398.9	0.889	0	10.02695	No
SLV 16	-1645	-4354	209	0	407.4	0.889	0	11.09238	No
SLV 15	-1645	-4354	209	0	407.4	0.889	0	11.09238	No
SLV 2	-2174	-3788	-160	0.018	457.3	0.893	0.2877	11.09238	No
SLV 1	-2174	-3788	-160	0.018	457.3	0.893	0.2877	11.09238	No
SLV 6	-2266	-1903	-154	0.02	466.1	0.894	0.32219	10.02695	No
SLV 5	-2266	-1903	-154	0.02	466.1	0.894	0.32219	10.02695	No
SLV 14	-1828	-2980	127	0.025	424.5	0.89	0.40338	11.09238	No
SLV 13	-1828	-2980	127	0.025	424.5	0.89	0.40338	11.09238	No

Tabella dei coefficienti di sicurezza minimi

Stato limite	Coeff.s.	Comb.	Verifica
PF_SLU	1.59	SLU 40	Si
V_SLU	1.141	SLU 40	Si
PF_SLV	0	SLV 1	No
V_SLV	0	SLV 1	No
PFFP_SLV	1.181	SLV 1	Si
R_SLV	0	SLV 11	No

Maschio 231

Verifiche condotte secondo D.M. 17-01-18 (N.T.C.)

Dati geometrici

X ini.	Y ini.	X fin.	Y fin.	Quota i.	Quota.s	l	Sp.	h netta	h ini.	h fin.	a	a.s.,sx	a.s.,dx
-19.687	5.798	-21.849	5.798	L6	L7	2.161	0.28	3.15	3.15	3.15			

Caratteristiche del materiale

(Circolare 7 21-01-19 C8.5.I) Muratura in mattoni pieni e malta di calce LC2_Corti

fb	fk	fvk0	fmedio	τ0	fv0	μ	ϕ	fv,lim	E	G	FC
600000			345000	9000	20000	0.58	0.77	32500	320000000	128000000	1.2

Verifica a pressoflessione nel piano secondo D.M. 17-01-18 NTC §7.8.2.2.1 in combinazioni non sismiche, γM = 3

Comb.	Quota	N	M	σ0	Mu	c.s.	Verifica
SLU 6	12.35	-5968	866	9861	5669.09	6.546	Si
SLU 6	14.25	-2001	466.67	3306	2074.7	4.446	Si
SLU 9	12.35	-5643	815.48	9324	5400.39	6.622	Si
SLU 9	14.25	-1572	372.01	2597	1644.3	4.42	Si
SLU 71	12.35	-7168	1056.75	11844	6620.58	6.265	Si
SLU 71	14.25	-1951	422.29	3223	2024.71	4.795	Si
SLU 50	12.35	-6866	959.24	11345	6386.67	6.658	Si
SLU 50	14.25	-1852	439.47	3060	1926.37	4.383	Si
SLU 8	12.35	-5644	804.03	9326	5401.47	6.718	Si
SLU 8	14.25	-1566	381.93	2588	1638.75	4.291	Si
SLU 51	12.35	-6864	970.69	11342	6385.66	6.578	Si
SLU 51	14.25	-1858	429.55	3069	1931.85	4.497	Si

Comb.	Quota	N	M	σ0	Mu	c.s.	Verifica
SLU 49	12.35	-7188	1032.66	11878	6635.95	6.426	Si
SLU 49	14.25	-2292	514.29	3788	2362.25	4.593	Si
SLU 48	12.35	-7190	1021.21	11880	6636.94	6.499	Si
SLU 48	14.25	-2287	524.21	3779	2356.87	4.496	Si
SLU 29	12.35	-5947	901.54	9826	5651.58	6.269	Si
SLU 29	14.25	-1665	364.75	2751	1738.33	4.766	Si
SLU 7	12.35	-5967	877.45	9859	5668.03	6.46	Si
SLU 7	14.25	-2006	456.75	3315	2080.15	4.554	Si

Verifica a pressoflessione nel piano secondo D.M. 17-01-18 NTC §7.8.2.2.1 in combinazioni sismiche, γM = 2

Comb.	Quota	N	M	σ0	Mu	c.s.	Verifica
SLV 12	12.35	-9182	1695.56	15171	8690.86	5.126	Si
SLV 12	14.25	-2777	228.37	4588	2888.37	12.648	Si
SLV 9	12.35	1713	-646.47	0	0	0	No, Trazione
SLV 9	14.25	1477	-14.56	0	0	0	No, Trazione
SLV 5	12.35	191	-354.74	0	0	0	No, Trazione
SLV 5	14.25	630	61.12	0	0	0	No, Trazione
SLV 13	12.35	-324	-167.1	535	348.5	2.086	Si
SLV 13	14.25	977	-17.84	0	0	0	No, Trazione
SLV 11	12.35	-9182	1695.56	15171	8690.86	5.126	Si
SLV 11	14.25	-2777	228.37	4588	2888.37	12.648	Si
SLV 7	12.35	-10704	1987.29	17687	9893.75	4.979	Si
SLV 7	14.25	-3624	304.05	5988	3724.63	12.25	Si
SLV 6	12.35	191	-354.74	0	0	0	No, Trazione
SLV 6	14.25	630	61.12	0	0	0	No, Trazione
SLV 8	12.35	-10704	1987.29	17687	9893.75	4.979	Si
SLV 8	14.25	-3624	304.05	5988	3724.63	12.25	Si
SLV 14	12.35	-324	-167.1	535	348.5	2.086	Si
SLV 14	14.25	977	-17.84	0	0	0	No, Trazione
SLV 10	12.35	1713	-646.47	0	0	0	No, Trazione
SLV 10	14.25	1477	-14.56	0	0	0	No, Trazione

Verifica a taglio nel piano secondo D.M. 17-01-18 (N.T.C.) §7.8.2.2.2 con rottura per scorrimento in combinazioni non sismiche, γM = 3

Comb.	Quota	N	V par	M	σ0	σN	l'	fvd	Vt scorr.	Vt fess.diag.	Vt,lim	c.s.	Verifica
SLU 77	12.35	-7462	1823	1166.85		12329	2.1615	7199	4357			2.39	Si
SLU 77	14.25	-2313	1699	428.21		3822	2.1615	6065	3671			2.16	Si
SLU 79	12.35	-7138	1903	1104.89		11794	2.1615	7128	4314			2.27	Si
SLU 79	14.25	-1878	1778	343.47		3104	2.1615	5969	3613			2.03	Si
SLU 58	12.35	-6835	1740	1007.38		11294	2.1615	7061	4274			2.46	Si
SLU 58	14.25	-1780	1627	360.65		2941	2.1615	5948	3600			2.21	Si
SLU 84	12.35	-6510	1731	1049.35		10757	2.1615	6990	4230			2.44	Si
SLU 84	14.25	-1603	1622	194.89		2649	2.1615	5909	3576			2.2	Si
SLU 72	12.35	-7167	1822	1068.2		11842	2.1615	7135	4318			2.37	Si
SLU 72	14.25	-1956	1703	412.37		3232	2.1615	5987	3623			2.13	Si
SLU 80	12.35	-7137	1910	1116.34		11792	2.1615	7128	4314			2.26	Si
SLU 80	14.25	-1884	1785	333.55		3113	2.1615	5971	3613			2.02	Si
SLU 71	12.35	-7168	1815	1056.75		11844	2.1615	7135	4318			2.38	Si
SLU 71	14.25	-1951	1696	422.29		3223	2.1615	5985	3622			2.14	Si
SLU 83	12.35	-6512	1724	1037.9		10759	2.1615	6990	4230			2.45	Si
SLU 83	14.25	-1597	1615	204.81		2640	2.1615	5907	3575			2.21	Si
SLU 78	12.35	-7461	1830	1178.3		12327	2.1615	7199	4357			2.38	Si
SLU 78	14.25	-2319	1706	418.29		3831	2.1615	6066	3671			2.15	Si
SLU 59	12.35	-6834	1747	1018.83		11292	2.1615	7061	4273			2.45	Si
SLU 59	14.25	-1785	1634	350.73		2950	2.1615	5949	3600			2.2	Si

Verifica a taglio nel piano secondo D.M. 17-01-18 (N.T.C.) §7.8.2.2.2 con rottura per scorrimento in combinazioni sismiche, γM = 2

Comb.	Quota	N	V par	M	σ0	σN	l'	fvd	Vt scorr.	Vt fess.diag.	Vt,lim	c.s.	Verifica
SLV 8	12.35	-10704	4599	1987.29		17687	2.1615	11871	7184			1.56	Si
SLV 8	14.25	-3624	2884	304.05		5988	2.1615	9531	5768			2	Si
SLV 10	12.35	1713	-2498	-646.47		0	0	8333	0			0	No, Vu<V
SLV 10	14.25	1477	-903	-14.56		0	0	8333	0			0	No, Vu<V
SLV 14	12.35	-324	-1376	-167.1		683	1.6944	8470	4018			2.92	Si
SLV 14	14.25	977	120	-17.84		0	0	8333	0			0	No, Vu<V
SLV 5	12.35	191	-1600	-354.74		0	0	8333	0			0	No, Vu<V
SLV 5	14.25	630	-704	61.12		0	0	8333	0			0	No, Vu<V
SLV 12	12.35	-9182	3701	1695.56		15171	2.1615	11368	6880			1.86	Si
SLV 12	14.25	-2777	2685	228.37		4588	2.1615	9251	5599			2.09	Si
SLV 7	12.35	-10704	4599	1987.29		17687	2.1615	11871	7184			1.56	Si
SLV 7	14.25	-3624	2884	304.05		5988	2.1615	9531	5768			2	Si
SLV 9	12.35	1713	-2498	-646.47		0	0	8333	0			0	No, Vu<V
SLV 9	14.25	1477	-903	-14.56		0	0	8333	0			0	No, Vu<V
SLV 6	12.35	191	-1600	-354.74		0	0	8333	0			0	No, Vu<V
SLV 6	14.25	630	-704	61.12		0	0	8333	0			0	No, Vu<V
SLV 13	12.35	-324	-1376	-167.1		683	1.6944	8470	4018			2.92	Si
SLV 13	14.25	977	120	-17.84		0	0	8333	0			0	No, Vu<V
SLV 11	12.35	-9182	3701	1695.56		15171	2.1615	11368	6880			1.86	Si
SLV 11	14.25	-2777	2685	228.37		4588	2.1615	9251	5599			2.09	Si

Verifica a pressoflessione fuori piano D.M. 17-01-18 (N.T.C.)

quota 13.025 Wa 0.05 denominatore 8 γM = 2

Comb.	fd	Sa	σ0	N	M	Mc	Coeff.s.	Verifica
SLV 13	143750	0.52	0	168	241.3	0	0	No, Trazione
SLV 6	143750	0.52	0	608	241.3	0	0	No, Trazione
SLV 14	143750	0.52	0	168	241.3	0	0	No, Trazione
SLV 5	143750	0.52	0	608	241.3	0	0	No, Trazione
SLV 10	143750	0.52	0	1904	241.3	0	0	No, Trazione
SLV 9	143750	0.52	0	1904	241.3	0	0	No, Trazione
SLV 15	143750	0.52	4324	-2617	241.3	353.4	1.46	Si
SLV 16	143750	0.52	4324	-2617	241.3	353.4	1.46	Si
SLV 2	143750	0.52	6861	-4152	241.3	548.67	2.27	Si

Comb.	fd	Sa	σ0	N	M	Mc	Coeff.s.	Verifica
SLV 1	143750	0.52	6861	-4152	241.3	548.67	2.27	Si

Verifica dei meccanismi locali di collasso con analisi cinematica lineare

forza di aggancio al piano = 0 quota mezzeria = 13.025 Wa = 0.05 Ta = 0.0592

Comb.	N top	N base	V orto	α0	M*	e*	a0*	aLim	Verifica
SLV 9	-216	384	-198	0	0	0	0	10.02695	No, Trazione
SLV 10	-216	384	-198	0	0	0	0	10.02695	No, Trazione
SLV 15	258	-4320	-58	0	0	0	0	11.09238	No, Trazione
SLV 13	369	-1636	-158	0	0	0	0	11.09238	No, Trazione
SLV 16	258	-4320	-58	0	0	0	0	11.09238	No, Trazione
SLV 14	369	-1636	-158	0	0	0	0	11.09238	No, Trazione
SLV 7	-1198	-9512	201	0.002	421	0.892	0.02795	10.02695	No
SLV 8	-1198	-9512	201	0.002	421	0.892	0.02795	10.02695	No
SLV 4	-1783	-7492	161	0.02	472.5	0.889	0.33153	11.09238	No
SLV 3	-1783	-7492	161	0.02	472.5	0.889	0.33153	11.09238	No

Tabella dei coefficienti di sicurezza minimi

Stato limite	Coeff.s.	Comb.	Verifica
PF_SLU	4.291	SLU 8	Si
V_SLU	2.024	SLU 80	Si
PF_SLV	0	SLV 14	No
V_SLV	0	SLV 5	No
PFFP_SLV	0	SLV 14	No
R_SLV	0	SLV 16	No

Maschio 232

Verifiche condotte secondo D.M. 17-01-18 (N.T.C.)

Dati geometrici

X ini.	Y ini.	X fin.	Y fin.	Quota i.	Quota.s	l	Sp.	h netta	h ini.	h fin.	a	a.s.,sx	a.s.,dx
-22.608	-3.254	-24.643	-3.254	L6	L7	2.035	0.28	3.15	3.15	3.15			

Caratteristiche del materiale

(Circolare 7 21-01-19 C8.5.I) Muratura in mattoni pieni e malta di calce LC2_Corti

fb	fk	fvk0	fmedio	τ0	fv0	μ	ϕ	fv,lim	E	G	FC
600000			345000	9000	20000	0.58	0.77	32500	320000000	128000000	1.2

Verifica a pressoflessione nel piano secondo D.M. 17-01-18 NTC §7.8.2.2.1 in combinazioni non sismiche, γM = 3

Comb.	Quota	N	M	σ0	Mu	c.s.	Verifica
SLU 83	12.35	-5164	1760.95	9063	4669.29	2.652	Si
SLU 83	14.25	-4389	-4.39	7704	4043.51	920.083	Si
SLU 42	12.35	-4274	1420.11	7501	3947.84	2.78	Si
SLU 42	14.25	-3659	-144.73	6423	3429.56	23.697	Si
SLU 81	12.35	-4617	1582.73	8104	4230.19	2.673	Si
SLU 81	14.25	-3703	26.71	6499	3466.63	129.808	Si
SLU 39	12.35	-3576	1430.13	6277	3358.23	2.348	Si
SLU 39	14.25	-3066	43.27	5381	2913.29	67.336	Si
SLU 20	12.35	-3973	1350.61	6973	3696.28	2.737	Si
SLU 20	14.25	-3378	-3.54	5928	3186.39	901.128	Si
SLU 41	12.35	-4123	1608.36	7237	3822.28	2.377	Si
SLU 41	14.25	-3753	12.16	6586	3509.34	288.486	Si
SLU 40	12.35	-3727	1241.88	6541	3487.4	2.808	Si
SLU 40	14.25	-2973	-113.63	5217	2830.7	24.913	Si
SLU 35	12.35	-4974	1611.82	8730	4518.41	2.803	Si
SLU 35	14.25	-4717	-113.95	8279	4311.24	37.835	Si
SLU 18	12.35	-3426	1172.39	6014	3228.63	2.754	Si
SLU 18	14.25	-2691	27.56	4723	2579.05	93.564	Si
SLU 37	12.35	-4734	1675.83	8309	4325.39	2.581	Si
SLU 37	14.25	-4397	-38.38	7718	4050.14	105.523	Si

Verifica a pressoflessione nel piano secondo D.M. 17-01-18 NTC §7.8.2.2.1 in combinazioni sismiche, γM = 2

Comb.	Quota	N	M	σ0	Mu	c.s.	Verifica
SLV 1	12.35	-3438	2523.15	6034	3324.93	1.318	Si
SLV 1	14.25	-2813	-1181.15	4938	2746.76	2.325	Si
SLV 7	12.35	-1641	2263.17	0	0	0	No, e>l/2
SLV 7	14.25	-2781	-808.13	4881	2716.58	3.362	Si
SLV 12	12.35	-2083	1180.86	3655	2055.43	1.741	Si
SLV 12	14.25	-2695	-38.67	4731	2636.2	68.164	Si
SLV 14	12.35	-4911	-1084.56	8619	4644.04	4.282	Si
SLV 14	14.25	-2528	1383.7	4436	2478.26	1.791	Si
SLV 4	12.35	-2370	2985.95	0	0	0	No, e>l/2
SLV 4	14.25	-2845	-1423.31	4993	2776	1.95	Si
SLV 8	12.35	-1641	2263.17	0	0	0	No, e>l/2
SLV 8	14.25	-2781	-808.13	4881	2716.58	3.362	Si
SLV 2	12.35	-3438	2523.15	6034	3324.93	1.318	Si
SLV 2	14.25	-2813	-1181.15	4938	2746.76	2.325	Si
SLV 13	12.35	-4911	-1084.56	8619	4644.04	4.282	Si
SLV 13	14.25	-2528	1383.7	4436	2478.26	1.791	Si
SLV 3	12.35	-2370	2985.95	0	0	0	No, e>l/2
SLV 3	14.25	-2845	-1423.31	4993	2776	1.95	Si
SLV 11	12.35	-2083	1180.86	3655	2055.43	1.741	Si
SLV 11	14.25	-2695	-38.67	4731	2636.2	68.164	Si

Verifica a taglio nel piano secondo D.M. 17-01-18 (N.T.C.) §7.8.2.2.2 con rottura per scorrimento in combinazioni non sismiche, γM = 3

Comb.	Quota	N	V par	M	σ0	σN	I'	fvd	Vt scorr.	Vt fess.diag.	Vt,lim	c.s.	Verifica
SLU 79	12.35	-5775	2002	1828.43		10136	2.0348	6907	3935			1.97	Si
SLU 79	14.25	-5034	2061	-54.94		8836	2.0348	6734	3837			1.86	Si
SLU 37	12.35	-4734	1811	1675.83		8495	1.9903	6688	3727			2.06	Si
SLU 37	14.25	-4397	1864	-38.38		7718	2.0348	6585	3752			2.01	Si
SLU 77	12.35	-6015	2051	1764.41		10557	2.0348	6963	3967			1.93	Si
SLU 77	14.25	-5353	2108	-130.51		9396	2.0348	6808	3879			1.84	Si
SLU 41	12.35	-4123	1733	1608.36		7824	1.882	6599	3477			2.01	Si
SLU 41	14.25	-3753	1774	12.16		6586	2.0348	6434	3666			2.07	Si
SLU 83	12.35	-5164	1924	1760.95		9088	2.0292	6767	3845			2	Si
SLU 83	14.25	-4389	1971	-4.39		7704	2.0348	6583	3751			1.9	Si
SLU 35	12.35	-4974	1860	1611.82		8730	2.0348	6720	3829			2.06	Si
SLU 35	14.25	-4717	1911	-113.95		8279	2.0348	6659	3794			1.99	Si
SLU 74	12.35	-5468	1868	1586.19		9597	2.0348	6835	3894			2.09	Si
SLU 74	14.25	-4667	1913	-99.41		8191	2.0348	6648	3788			1.98	Si
SLU 84	12.35	-5315	1784	1572.71		9328	2.0348	6799	3874			2.17	Si
SLU 84	14.25	-4296	1820	-161.29		7540	2.0348	6561	3738			2.05	Si
SLU 78	12.35	-6166	1911	1576.16		10821	2.0348	6998	3987			2.09	Si
SLU 78	14.25	-5260	1957	-287.4		9232	2.0348	6787	3867			1.98	Si
SLU 80	12.35	-5926	1863	1640.18		10400	2.0348	6942	3955			2.12	Si
SLU 80	14.25	-4941	1910	-211.83		8672	2.0348	6712	3824			2	Si

Verifica a taglio nel piano secondo D.M. 17-01-18 (N.T.C.) §7.8.2.2.2 con rottura per scorrimento in combinazioni sismiche, γM = 2

Comb.	Quota	N	V par	M	σ0	σN	I'	fvd	Vt scorr.	Vt fess.diag.	Vt,lim	c.s.	Verifica
SLV 3	12.35	-2370	3775	2985.95		0	0	8333	0			0	No, Vu<V
SLV 3	14.25	-2845	2383	-1423.31		6549	1.5513	9643	4189			1.76	Si
SLV 1	12.35	-3438	3041	2523.15		14437	0.8504	11221	2672			0.88	No, Vu<V
SLV 1	14.25	-2813	1742	-1181.15		5605	1.7928	9454	4746			2.72	Si
SLV 4	12.35	-2370	3775	2985.95		0	0	8333	0			0	No, Vu<V
SLV 4	14.25	-2845	2383	-1423.31		6549	1.5513	9643	4189			1.76	Si
SLV 8	12.35	-1641	3004	2263.17		0	0	8333	0			0	No, Vu<V
SLV 8	14.25	-2781	2462	-808.13		4881	2.0348	9310	5304			2.15	Si
SLV 12	12.35	-2083	1608	1180.86		5505	1.3512	9434	3569			2.22	Si
SLV 12	14.25	-2695	1890	-38.67		4731	2.0348	9279	5287			2.8	Si
SLV 2	12.35	-3438	3041	2523.15		14437	0.8504	11221	2672			0.88	No, Vu<V
SLV 2	14.25	-2813	1742	-1181.15		5605	1.7928	9454	4746			2.72	Si
SLV 14	12.35	-4911	-1612	-1084.56		8619	2.0348	10057	5730			3.55	Si
SLV 14	14.25	-2528	-166	1383.7		6402	1.41	9614	3795			22.86	Si
SLV 11	12.35	-2083	1608	1180.86		5505	1.3512	9434	3569			2.22	Si
SLV 11	14.25	-2695	1890	-38.67		4731	2.0348	9279	5287			2.8	Si
SLV 7	12.35	-1641	3004	2263.17		0	0	8333	0			0	No, Vu<V
SLV 7	14.25	-2781	2462	-808.13		4881	2.0348	9310	5304			2.15	Si
SLV 13	12.35	-4911	-1612	-1084.56		8619	2.0348	10057	5730			3.55	Si
SLV 13	14.25	-2528	-166	1383.7		6402	1.41	9614	3795			22.86	Si

Verifica a pressoflessione fuori piano D.M. 17-01-18 (N.T.C.)

quota 13.025 Wa 0.05 denominatore 8 γM = 2

Comb.	fd	Sa	σ0	N	M	Mc	Coeff.s.	Verifica
SLV 8	143750	0.52	4052	-2309	227.16	312.49	1.38	Si
SLV 7	143750	0.52	4052	-2309	227.16	312.49	1.38	Si
SLV 11	143750	0.52	4157	-2369	227.16	320.34	1.41	Si
SLV 12	143750	0.52	4157	-2369	227.16	320.34	1.41	Si
SLV 4	143750	0.52	5160	-2940	227.16	394.2	1.74	Si
SLV 3	143750	0.52	5160	-2940	227.16	394.2	1.74	Si
SLV 16	143750	0.52	5511	-3140	227.16	419.79	1.85	Si
SLV 15	143750	0.52	5511	-3140	227.16	419.79	1.85	Si
SLV 1	143750	0.52	6215	-3541	227.16	470.53	2.07	Si
SLV 2	143750	0.52	6215	-3541	227.16	470.53	2.07	Si

Verifica dei meccanismi locali di collasso con analisi cinematica lineare

forza di aggancio al piano = 0 quota mezzeria = 13.025 Wa = 0.05 Ta = 0.0592

Comb.	N top	N base	V orto	α0	M*	e*	a0*	aLim	Verifica
SLV 13	-1533	-3906	-184	0.009	431.6	0.889	0.14506	11.09238	No
SLV 14	-1533	-3906	-184	0.009	431.6	0.889	0.14506	11.09238	No
SLV 16	-1863	-2573	-163	0.018	461.8	0.889	0.29814	11.09238	No
SLV 15	-1863	-2573	-163	0.018	461.8	0.889	0.29814	11.09238	No
SLV 9	-1315	-6243	-114	0.03	412.4	0.89	0.49149	10.02695	No
SLV 10	-1315	-6243	-114	0.03	412.4	0.89	0.49149	10.02695	No
SLV 3	-2343	-4810	106	0.036	507	0.892	0.58163	11.09238	No
SLV 4	-2343	-4810	106	0.036	507	0.892	0.58163	11.09238	No
SLV 1	-2013	-6143	86	0.041	475.7	0.89	0.66387	11.09238	No
SLV 2	-2013	-6143	86	0.041	475.7	0.89	0.66387	11.09238	No

Tabella dei coefficienti di sicurezza minimi

Stato limite	Coeff.s.	Comb.	Verifica
PF_SLU	2.348	SLU 39	Si
V_SLU	1.84	SLU 77	Si
PF_SLV	0	SLV 3	No
V_SLV	0	SLV 3	No
PFFP_SLV	1.376	SLV 7	Si
R_SLV	0.013	SLV 13	No

Maschio 233

Verifiche condotte secondo D.M. 17-01-18 (N.T.C.)

Dati geometrici

X ini.	Y ini.	X fin.	Y fin.	Quota i.	Quota.s	l	Sp.	h netta	h ini.	h fin.	a	a.s.,sx	a.s.,dx
-19.303	-3.254	-21.608	-3.254	L6	L7	2.305	0.28	3.15	3.15	3.15			

Caratteristiche del materiale

(Circolare 7 21-01-19 C8.5.I) Muratura in mattoni pieni e malta di calce LC2_Corti

fb	fk	fvk0	fmedio	τ0	fv0	μ	ϕ	fv,lim	E	G	FC
600000			345000	9000	20000	0.58	0.77	32500	320000000	128000000	1.2

Verifica a pressoflessione nel piano secondo D.M. 17-01-18 NTC §7.8.2.2.1 in combinazioni non sismiche, γM = 3

Comb.	Quota	N	M	σ0	Mu	c.s.	Verifica
SLU 2	13.45	-3391	405.63	5254	3655.69	9.012	Si
SLU 2	14.25	-2480	-66.84	3842	2723.33	40.745	Si
SLU 26	13.45	-4209	493.27	6522	4463.01	9.048	Si
SLU 26	14.25	-3282	-180.66	5085	3546.54	19.631	Si
SLU 23	13.45	-3645	414.81	5648	3909.86	9.426	Si
SLU 23	14.25	-2718	-134.4	4211	2970.45	22.101	Si
SLU 39	13.45	-3105	92.81	4811	3366.93	36.278	Si
SLU 39	14.25	-2177	-284.96	3374	2405.55	8.442	Si
SLU 5	13.45	-3955	484.09	6128	4215.14	8.707	Si
SLU 5	14.25	-3044	-113.09	4717	3305.3	29.226	Si
SLU 10	13.45	-3349	400.21	5189	3613.99	9.03	Si
SLU 10	14.25	-2438	-139.84	3778	2679.97	19.165	Si
SLU 41	13.45	-3669	171.27	5685	3933.45	22.966	Si
SLU 41	14.25	-2742	-331.21	4248	2995.01	9.043	Si
SLU 31	13.45	-3604	409.38	5584	3868.62	9.45	Si
SLU 31	14.25	-2676	-207.4	4147	2927.53	14.115	Si
SLU 13	13.45	-3913	478.67	6063	4174.47	8.721	Si
SLU 13	14.25	-3003	-186.09	4652	3262.97	17.534	Si
SLU 34	13.45	-4168	487.85	6458	4422.8	9.066	Si
SLU 34	14.25	-3241	-253.66	5021	3504.64	13.816	Si

Verifica a pressoflessione nel piano secondo D.M. 17-01-18 NTC §7.8.2.2.1 in combinazioni sismiche, γM = 2

Comb.	Quota	N	M	σ0	Mu	c.s.	Verifica
SLV 1	13.45	-3304	2477.42	5119	3648.12	1.473	Si
SLV 1	14.25	-1856	-1371.89	2876	2089.13	1.523	Si
SLV 15	13.45	-2637	-2292.51	4086	2937.38	1.281	Si
SLV 15	14.25	-2253	1065.35	3491	2522.83	2.368	Si
SLV 12	13.45	-970	-1996.72	0	0	0	No, e>l/2
SLV 12	14.25	-1851	268.36	2868	2083.5	7.764	Si
SLV 2	13.45	-3304	2477.42	5119	3648.12	1.473	Si
SLV 2	14.25	-1856	-1371.89	2876	2089.13	1.523	Si
SLV 16	13.45	-2637	-2292.51	4086	2937.38	1.281	Si
SLV 16	14.25	-2253	1065.35	3491	2522.83	2.368	Si
SLV 8	13.45	-794	-837.46	1230	905.67	1.081	Si
SLV 8	14.25	-1680	-451.73	2603	1895.07	4.195	Si
SLV 7	13.45	-794	-837.46	1230	905.67	1.081	Si
SLV 7	14.25	-1680	-451.73	2603	1895.07	4.195	Si
SLV 4	13.45	-2051	1571.69	3177	2301.93	1.465	Si
SLV 4	14.25	-1683	-1334.94	2607	1898.12	1.422	Si
SLV 3	13.45	-2051	1571.69	3177	2301.93	1.465	Si
SLV 3	14.25	-1683	-1334.94	2607	1898.12	1.422	Si
SLV 11	13.45	-970	-1996.72	0	0	0	No, e>l/2
SLV 11	14.25	-1851	268.36	2868	2083.5	7.764	Si

Verifica a taglio nel piano secondo D.M. 17-01-18 (N.T.C.) §7.8.2.2.2 con rottura per scorrimento in combinazioni non sismiche, γM = 3

Comb.	Quota	N	V par	M	σ0	σN	l'	fvd	Vt scorr.	Vt fess.diag.	Vt,lim	c.s.	Verifica
SLU 76	13.45	-4954	977	512.11		7675	2.305	6579	4246			4.35	Si
SLU 76	14.25	-3759	977	-264.43		5824	2.305	6332	4087			4.18	Si
SLU 78	13.45	-5747	927	463.32		8904	2.305	6743	4352			4.69	Si
SLU 78	14.25	-4552	927	-273.23		7053	2.305	6496	4192			4.52	Si
SLU 38	13.45	-4540	952	440.61		7034	2.305	6493	4191			4.4	Si
SLU 38	14.25	-3612	952	-318.42		5597	2.305	6302	4067			4.27	Si
SLU 84	13.45	-4743	879	384.09		7349	2.305	6535	4218			4.8	Si
SLU 84	14.25	-3548	879	-314.22		5498	2.305	6289	4059			4.62	Si
SLU 59	13.45	-5071	906	455.7		7857	2.305	6603	4262			4.71	Si
SLU 59	14.25	-3893	906	-261.62		6031	2.305	6360	4105			4.53	Si
SLU 34	13.45	-4168	931	487.85		6458	2.305	6417	4141			4.45	Si
SLU 34	14.25	-3241	931	-253.66		5021	2.305	6225	4018			4.32	Si
SLU 55	13.45	-4699	884	502.94		7281	2.305	6526	4212			4.77	Si
SLU 55	14.25	-3521	884	-196.86		5455	2.305	6283	4055			4.59	Si
SLU 68	13.45	-4995	893	517.54		7739	2.305	6587	4252			4.76	Si
SLU 68	14.25	-3800	893	-191.43		5888	2.305	6341	4092			4.58	Si
SLU 80	13.45	-5325	999	464.87		8251	2.305	6656	4296			4.3	Si
SLU 80	14.25	-4130	999	-329.19		6400	2.305	6409	4136			4.14	Si
SLU 72	13.45	-5367	915	470.3		8315	2.305	6664	4301			4.7	Si
SLU 72	14.25	-4172	915	-256.19		6464	2.305	6417	4142			4.53	Si

Verifica a taglio nel piano secondo D.M. 17-01-18 (N.T.C.) §7.8.2.2.2 con rottura per scorrimento in combinazioni sismiche, γM = 2

Comb.	Quota	N	V par	M	σ0	σN	l'	fvd	Vt scorr.	Vt fess.diag.	Vt,lim	c.s.	Verifica
SLV 7	13.45	-794	-737	-837.46		9690	0.2926	10271	841			1.14	Si
SLV 7	14.25	-1680	268	-451.73		2603	2.305	8854	5714			21.36	Si
SLV 12	13.45	-970	-2883	-1996.72		0	0	8333	0			0	No, Vu<V
SLV 12	14.25	-1851	-1815	268.36		2868	2.305	8907	5749			3.17	Si
SLV 15	13.45	-2637	-3901	-2292.51		11089	0.8493	10551	2509			0.64	No, Vu<V
SLV 15	14.25	-2253	-3483	1065.35		3947	2.0392	9123	5209			1.5	Si
SLV 16	13.45	-2637	-3901	-2292.51		11089	0.8493	10551	2509			0.64	No, Vu<V
SLV 16	14.25	-2253	-3483	1065.35		3947	2.0392	9123	5209			1.5	Si
SLV 8	13.45	-794	-737	-837.46		9690	0.2926	10271	841			1.14	Si
SLV 8	14.25	-1680	268	-451.73		2603	2.305	8854	5714			21.36	Si

Comb.	Quota	N	V par	M	σ0	σN	l'	fvd	Vt scorr.	Vt fess.diag.	Vt,lim	c.s.	Verifica
SLV 2	13.45	-3304	4526	2477.42		9768	1.2079	10287	3479			0.77	No, Vu<V
SLV 2	14.25	-1856	4109	-1371.89		5345	1.2405	9402	3266			0.79	No, Vu<V
SLV 3	13.45	-2051	3253	1571.69		6323	1.1582	9598	3113			0.96	No, Vu<V
SLV 3	14.25	-1683	3457	-1334.94		5577	1.0778	9449	2851			0.82	No, Vu<V
SLV 1	13.45	-3304	4526	2477.42		9768	1.2079	10287	3479			0.77	No, Vu<V
SLV 1	14.25	-1856	4109	-1371.89		5345	1.2405	9402	3266			0.79	No, Vu<V
SLV 4	13.45	-2051	3253	1571.69		6323	1.1582	9598	3113			0.96	No, Vu<V
SLV 4	14.25	-1683	3457	-1334.94		5577	1.0778	9449	2851			0.82	No, Vu<V
SLV 11	13.45	-970	-2883	-1996.72		0	0	8333	0			0	No, Vu<V
SLV 11	14.25	-1851	-1815	268.36		2868	2.305	8907	5749			3.17	Si

Verifica a pressoflessione fuori piano D.M. 17-01-18 (N.T.C.)

quota 13.025 Wa 0.05 denominatore 8 γM = 2

Comb.	fd	Sa	σ0	N	M	Mc	Coeff.s.	Verifica
SLV 12	143750	0.52	0	-260	257.32	0	0	No, e>t/2
SLV 8	143750	0.52	0	-1116	257.32	0	0	No, e>t/2
SLV 11	143750	0.52	0	-260	257.32	0	0	No, e>t/2
SLV 16	143750	0.52	0	-1056	257.32	0	0	No, e>t/2
SLV 7	143750	0.52	0	-1116	257.32	0	0	No, e>t/2
SLV 15	143750	0.52	0	-1056	257.32	0	0	No, e>t/2
SLV 13	143750	0.52	4020	-2595	257.32	351.32	1.37	Si
SLV 14	143750	0.52	4020	-2595	257.32	351.32	1.37	Si
SLV 4	143750	0.52	6058	-3910	257.32	520.22	2.02	Si
SLV 3	143750	0.52	6058	-3910	257.32	520.22	2.02	Si

Verifica dei meccanismi locali di collasso con analisi cinematica lineare

forza di aggancio al piano = 0 quota mezzeria = 13.025 Wa = 0.05 Ta = 0.0592

Comb.	N top	N base	V orto	α0	M*	e*	a0*	aLim	Verifica
SLV 6	-1805	-7472	-152	0.025	495.2	0.889	0.40852	10.02695	No
SLV 5	-1805	-7472	-152	0.025	495.2	0.889	0.40852	10.02695	No
SLV 9	-1822	-6815	-146	0.027	496.7	0.889	0.43801	10.02695	No
SLV 10	-1822	-6815	-146	0.027	496.7	0.889	0.43801	10.02695	No
SLV 12	-839	-1404	100	0.037	413.9	0.903	0.60362	10.02695	No
SLV 11	-839	-1404	100	0.037	413.9	0.903	0.60362	10.02695	No
SLV 7	-822	-2061	94	0.04	412.7	0.903	0.64038	10.02695	No
SLV 8	-822	-2061	94	0.04	412.7	0.903	0.64038	10.02695	No
SLV 2	-1441	-6345	-73	0.047	462.9	0.89	0.76525	11.09238	No
SLV 1	-1441	-6345	-73	0.047	462.9	0.89	0.76525	11.09238	No

Tabella dei coefficienti di sicurezza minimi

Stato limite	Coeff.s.	Comb.	Verifica
PF_SLU	8.442	SLU 39	Si
V_SLU	4.14	SLU 80	Si
PF_SLV	0	SLV 11	No
V_SLV	0	SLV 11	No
PFFP_SLV	0	SLV 7	No
R_SLV	0.041	SLV 5	No

Maschio 234

Verifiche condotte secondo D.M. 17-01-18 (N.T.C.)

Dati geometrici

X ini.	Y ini.	X fin.	Y fin.	Quota i.	Quota.s	l	Sp.	h netta	h ini.	h fin.	a	a.s.,sx	a.s.,dx
-18.275	-3.254	-18.803	-3.254	L6	L7	0.529	0.28	3.15	3.15	3.15			

Caratteristiche del materiale

(Circolare 7 21-01-19 C8.5.I) Muratura in mattoni pieni e malta di calce LC2_Corti

fb	fk	fvk0	fmedio	τ0	fv0	μ	ϕ	fv,lim	E	G	FC
600000			345000	9000	20000	0.58	0.77	32500	320000000	128000000	1.2

Verifica a pressoflessione nel piano secondo D.M. 17-01-18 NTC §7.8.2.2.1 in combinazioni non sismiche, γM = 3

Comb.	Quota	N	M	σ0	Mu	c.s.	Verifica
SLU 34	13.45	-989	75.63	6679	239.97	3.173	Si
SLU 34	14.25	-854	-79.39	5770	209.83	2.643	Si
SLU 44	13.45	-911	74.09	6151	222.56	3.004	Si
SLU 44	14.25	-675	-61.57	4560	168.47	2.736	Si
SLU 23	13.45	-748	67.55	5049	185.37	2.744	Si
SLU 23	14.25	-562	-53.16	3796	141.63	2.664	Si
SLU 10	13.45	-633	66.38	4275	158.55	2.388	Si
SLU 10	14.25	-439	-51.12	2963	111.73	2.186	Si
SLU 2	13.45	-658	66.17	4448	164.56	2.487	Si
SLU 2	14.25	-456	-49.85	3080	115.99	2.327	Si
SLU 52	13.45	-885	74.3	5979	216.82	2.918	Si
SLU 52	14.25	-658	-62.84	4442	164.37	2.616	Si
SLU 55	13.45	-1152	82.16	7781	275.43	3.352	Si
SLU 55	14.25	-967	-87.8	6534	235.21	2.679	Si
SLU 31	13.45	-722	67.77	4877	179.45	2.648	Si
SLU 31	14.25	-545	-54.43	3678	137.46	2.525	Si
SLU 13	13.45	-900	74.24	6077	220.11	2.965	Si
SLU 13	14.25	-748	-76.08	5054	185.55	2.439	Si
SLU 5	13.45	-925	74.03	6249	225.82	3.05	Si
SLU 5	14.25	-766	-74.81	5172	189.57	2.534	Si

Verifica a pressoflessione nel piano secondo D.M. 17-01-18 NTC §7.8.2.2.1 in combinazioni sismiche, γM = 2

Comb.	Quota	N	M	σ0	Mu	c.s.	Verifica
SLV 14	13.45	-321	-215.19	0	0	0	No, e>l/2
SLV 14	14.25	-384	416.77	0	0	0	No, e>l/2
SLV 3	13.45	-1600	272.05	10805	385.5	1.417	Si
SLV 3	14.25	-1369	-505.07	0	0	0	No, e>l/2
SLV 13	13.45	-321	-215.19	0	0	0	No, e>l/2
SLV 13	14.25	-384	416.77	0	0	0	No, e>l/2
SLV 9	13.45	7	-26.17	0	0	0	No, Trazione
SLV 9	14.25	544	178.63	0	0	0	No, Trazione
SLV 4	13.45	-1600	272.05	10805	385.5	1.417	Si
SLV 4	14.25	-1369	-505.07	0	0	0	No, e>l/2
SLV 10	13.45	7	-26.17	0	0	0	No, Trazione
SLV 10	14.25	544	178.63	0	0	0	No, Trazione
SLV 5	13.45	-223	123.65	0	0	0	No, e>l/2
SLV 5	14.25	500	-81.21	0	0	0	No, Trazione
SLV 2	13.45	-1088	284.24	7350	270.37	0.951	No, M>Mu
SLV 2	14.25	-530	-449.35	0	0	0	No, e>l/2
SLV 1	13.45	-1088	284.24	7350	270.37	0.951	No, M>Mu
SLV 1	14.25	-530	-449.35	0	0	0	No, e>l/2
SLV 6	13.45	-223	123.65	0	0	0	No, e>l/2
SLV 6	14.25	500	-81.21	0	0	0	No, Trazione

Verifica a taglio nel piano secondo D.M. 17-01-18 (N.T.C.) §7.8.2.2.2 con rottura per scorrimento in combinazioni non sismiche, γM = 3

Comb.	Quota	N	V par	M	σ0	σN	l'	fvd	Vt scorr.	Vt fess.diag.	Vt,lim	c.s.	Verifica
SLU 70	13.45	-1760	217	79.24		11888	0.5287	7141	1057			4.87	Si
SLU 70	14.25	-1688	216	-113.36		11401	0.5287	7076	1048			4.85	Si
SLU 80	13.45	-1621	214	76.13		10951	0.5287	7016	1039			4.85	Si
SLU 80	14.25	-1541	213	-113.27		10409	0.5287	6943	1028			4.82	Si
SLU 55	13.45	-1152	202	82.16		7781	0.5287	6593	976			4.84	Si
SLU 55	14.25	-967	201	-87.8		6633	0.5208	6440	939			4.67	Si
SLU 57	13.45	-1645	214	78.07		11115	0.5287	7038	1042			4.86	Si
SLU 57	14.25	-1564	213	-111.31		10567	0.5287	6965	1031			4.83	Si
SLU 13	13.45	-900	181	74.24		6077	0.5287	6366	942			5.21	Si
SLU 13	14.25	-748	180	-76.08		5475	0.4881	6286	859			4.77	Si
SLU 68	13.45	-1266	205	83.33		8554	0.5287	6696	991			4.84	Si
SLU 68	14.25	-1091	204	-89.84		7367	0.5287	6538	968			4.75	Si
SLU 78	13.45	-1735	218	79.45		11716	0.5287	7118	1054			4.83	Si
SLU 78	14.25	-1670	217	-114.62		11283	0.5287	7060	1045			4.81	Si
SLU 47	13.45	-1177	201	81.95		7953	0.5287	6616	979			4.88	Si
SLU 47	14.25	-985	200	-86.53		6652	0.5287	6442	954			4.77	Si
SLU 59	13.45	-1532	210	74.74		10350	0.5287	6936	1027			4.88	Si
SLU 59	14.25	-1435	209	-109.96		9694	0.5287	6848	1014			4.84	Si
SLU 76	13.45	-1241	206	83.55		8382	0.5287	6673	988			4.8	Si
SLU 76	14.25	-1073	205	-91.11		7250	0.5287	6522	966			4.72	Si

Verifica a taglio nel piano secondo D.M. 17-01-18 (N.T.C.) §7.8.2.2.2 con rottura per scorrimento in combinazioni sismiche, γM = 2

Comb.	Quota	N	V par	M	σ0	σN	l'	fvd	Vt scorr.	Vt fess.diag.	Vt,lim	c.s.	Verifica
SLV 5	13.45	-223	709	123.65		0	0	8333	0			0	No, Vu<V
SLV 5	14.25	500	501	-81.21		0	0	8333	0			0	No, Vu<V
SLV 4	13.45	-1600	1062	272.05		20195	0.2829	12372	980			0.92	No, Vu<V
SLV 4	14.25	-1369	653	-505.07		0	0	8333	0			0	No, Vu<V
SLV 10	13.45	7	61	-26.17		0	0	8333	0			0	No, Vu<V
SLV 10	14.25	544	112	178.63		0	0	8333	0			0	No, Vu<V
SLV 2	13.45	-1088	1248	284.24		410116	0.0095	16250	43			0.03	No, Vu<V
SLV 2	14.25	-530	792	-449.35		0	0	8333	0			0	No, Vu<V
SLV 14	13.45	-321	-911	-215.19		0	0	8333	0			0	No, Vu<V
SLV 14	14.25	-384	-503	416.77		0	0	8333	0			0	No, Vu<V
SLV 3	13.45	-1600	1062	272.05		20195	0.2829	12372	980			0.92	No, Vu<V
SLV 3	14.25	-1369	653	-505.07		0	0	8333	0			0	No, Vu<V
SLV 13	13.45	-321	-911	-215.19		0	0	8333	0			0	No, Vu<V
SLV 13	14.25	-384	-503	416.77		0	0	8333	0			0	No, Vu<V
SLV 1	13.45	-1088	1248	284.24		410116	0.0095	16250	43			0.03	No, Vu<V
SLV 1	14.25	-530	792	-449.35		0	0	8333	0			0	No, Vu<V
SLV 6	13.45	-223	709	123.65		0	0	8333	0			0	No, Vu<V
SLV 6	14.25	500	501	-81.21		0	0	8333	0			0	No, Vu<V
SLV 9	13.45	7	61	-26.17		0	0	8333	0			0	No, Vu<V
SLV 9	14.25	544	112	178.63		0	0	8333	0			0	No, Vu<V

Verifica a pressoflessione fuori piano D.M. 17-01-18 (N.T.C.)

quota 13.025 Wa 0.05 denominatore 8 γM = 2

Comb.	fd	Sa	σ0	N	M	Mc	Coeff.s.	Verifica
SLV 2	143750	0.52	0	198	59.03	0	0	No, Trazione
SLV 5	143750	0.52	0	-260	59.03	0	0	No, e>t/2
SLV 4	143750	0.52	0	95	59.03	0	0	No, Trazione
SLV 6	143750	0.52	0	-260	59.03	0	0	No, e>t/2
SLV 3	143750	0.52	0	95	59.03	0	0	No, Trazione
SLV 1	143750	0.52	0	198	59.03	0	0	No, Trazione
SLV 8	143750	0.52	4078	-604	59.03	81.7	1.38	Si
SLV 7	143750	0.52	4078	-604	59.03	81.7	1.38	Si
SLV 9	143750	0.52	5101	-755	59.03	101.31	1.72	Si
SLV 10	143750	0.52	5101	-755	59.03	101.31	1.72	Si

Verifica dei meccanismi locali di collasso con analisi cinematica lineare

forza di aggancio al piano = 0 quota mezzeria = 13.025 Wa = 0.05 Ta = 0.0592

Comb.	N top	N base	V orto	α0	M*	e*	a0*	aLim	Verifica
SLV 10	126	-888	18	0	0	0	0	10.02695	No, Trazione
SLV 6	216	-739	15	0	0	0	0	10.02695	No, Trazione
SLV 9	126	-888	18	0	0	0	0	10.02695	No, Trazione
SLV 5	216	-739	15	0	0	0	0	10.02695	No, Trazione

Comb.	N top	N base	V orto	α0	M*	e*	a0*	aLim	Verifica
SLV 8	-1637	-556	-91	0.009	233.5	0.925	0.1429	10.02695	No
SLV 7	-1637	-556	-91	0.009	233.5	0.925	0.1429	10.02695	No
SLV 12	-1727	-705	-88	0.012	242.6	0.927	0.1886	10.02695	No
SLV 11	-1727	-705	-88	0.012	242.6	0.927	0.1886	10.02695	No
SLV 4	-883	-446	-58	0.014	158.3	0.902	0.23292	11.09238	No
SLV 3	-883	-446	-58	0.014	158.3	0.902	0.23292	11.09238	No

Tabella dei coefficienti di sicurezza minimi

Stato limite	Coeff.s.	Comb.	Verifica
PF_SLU	2.186	SLU 10	Si
V_SLU	4.672	SLU 55	Si
PF_SLV	0	SLV 10	No
V_SLV	0	SLV 1	No
PFFP_SLV	0	SLV 4	No
R_SLV	0	SLV 10	No

Maschio 235

Verifiche condotte secondo D.M. 17-01-18 (N.T.C.)

Dati geometrici

X ini.	Y ini.	X fin.	Y fin.	Quota i.	Quota.s	l	Sp.	h netta	h ini.	h fin.	a	a.s.,sx	a.s.,dx
-19.687	5.798	-19.687	6.536	L6	L7	0.738	0.28	3.15	3.15	3.15			

Caratteristiche del materiale

(Circolare 7 21-01-19 C8.5.I) Muratura in mattoni pieni e malta di calce LC2_Corti

fb	fk	fvk0	fmedio	τ0	fv0	μ	ϕ	fv,lim	E	G	FC
600000			345000	9000	20000	0.58	0.77	32500	320000000	128000000	1.2

Verifica a pressoflessione nel piano secondo D.M. 17-01-18 NTC §7.8.2.2.1 in combinazioni non sismiche, γM = 3

Comb.	Quota	N	M	σ0	Mu	c.s.	Verifica
SLU 38	11.45	-2433	-81.19	11779	767.97	9.459	Si
SLU 38	14.6	-1157	-410.08	5599	397.4	0.969	No, M>Mu
SLU 51	11.45	-2668	-53.85	12914	828.3	15.38	Si
SLU 51	14.6	-1201	-425.81	5815	411.56	0.967	No, M>Mu
SLU 76	11.45	-2693	-80.76	13037	834.67	10.336	Si
SLU 76	14.6	-1065	-380.11	5156	368.15	0.969	No, M>Mu
SLU 30	11.45	-2359	-63.32	11418	748.33	11.818	Si
SLU 30	14.6	-1143	-406.59	5531	392.96	0.966	No, M>Mu
SLU 72	11.45	-2835	-69.12	13721	869.69	12.582	Si
SLU 72	14.6	-1290	-457.79	6243	439.39	0.96	No, M>Mu
SLU 80	11.45	-2909	-86.99	14081	887.77	10.205	Si
SLU 80	14.6	-1304	-461.28	6311	443.74	0.962	No, M>Mu
SLU 59	11.45	-2743	-71.72	13275	846.93	11.809	Si
SLU 59	14.6	-1215	-429.29	5882	415.97	0.969	No, M>Mu
SLU 68	11.45	-2619	-62.89	12677	815.88	12.973	Si
SLU 68	14.6	-1051	-376.62	5089	363.65	0.966	No, M>Mu
SLU 26	11.45	-2143	-57.09	10374	690.02	12.087	Si
SLU 26	14.6	-904	-325.41	4377	315.68	0.97	No, M>Mu
SLU 71	11.45	-2842	-69.64	13754	871.32	12.512	Si
SLU 71	14.6	-1296	-455.65	6273	441.31	0.969	No, M>Mu

Verifica a pressoflessione nel piano secondo D.M. 17-01-18 NTC §7.8.2.2.1 in combinazioni sismiche, γM = 2

Comb.	Quota	N	M	σ0	Mu	c.s.	Verifica
SLV 9	11.45	-1752	470.75	8482	601.67	1.278	Si
SLV 9	14.6	-522	-749.92	0	0	0	No, e>l/2
SLV 8	11.45	-1938	-563.25	9381	660.15	1.172	Si
SLV 8	14.6	-720	315.14	0	0	0	No, e>l/2
SLV 4	11.45	-2416	-416.39	11694	806.06	1.936	Si
SLV 4	14.6	-363	265.39	0	0	0	No, e>l/2
SLV 10	11.45	-1752	470.75	8482	601.67	1.278	Si
SLV 10	14.6	-522	-749.92	0	0	0	No, e>l/2
SLV 7	11.45	-1938	-563.25	9381	660.15	1.172	Si
SLV 7	14.6	-720	315.14	0	0	0	No, e>l/2
SLV 3	11.45	-2416	-416.39	11694	806.06	1.936	Si
SLV 3	14.6	-363	265.39	0	0	0	No, e>l/2
SLV 5	11.45	-2110	328.97	10215	713.52	2.169	Si
SLV 5	14.6	-332	-536.94	0	0	0	No, e>l/2
SLV 6	11.45	-2110	328.97	10215	713.52	2.169	Si
SLV 6	14.6	-332	-536.94	0	0	0	No, e>l/2
SLV 13	11.45	-1275	323.88	6169	446.49	1.379	Si
SLV 13	14.6	-879	-700.16	0	0	0	No, e>l/2
SLV 14	11.45	-1275	323.88	6169	446.49	1.379	Si
SLV 14	14.6	-879	-700.16	0	0	0	No, e>l/2

Verifica a taglio nel piano secondo D.M. 17-01-18 (N.T.C.) §7.8.2.2.2 con rottura per scorrimento in combinazioni non sismiche, γM = 3

Comb.	Quota	N	V par	M	σ0	σN	l'	fvd	Vt scorr.	Vt fess.diag.	Vt,lim	c.s.	Verifica
SLU 72	11.45	-2835	-431	-69.12		13721	0.7379	7385	1526			3.54	Si
SLU 72	14.6	-1290	515	-457.79		109599	0.042	10833	127			0.25	No, Vu<V
SLU 5	11.45	-1977	-263	-41.82		9567	0.7379	6831	1411			5.37	Si
SLU 5	14.6	-816	332	-293.42		105325	0.0277	10833	84			0.25	No, Vu<V
SLU 30	11.45	-2359	-392	-63.32		11418	0.7379	7078	1462			3.73	Si
SLU 30	14.6	-1143	460	-406.59		103634	0.0394	10833	119			0.26	No, Vu<V
SLU 2	11.45	-1765	-216	-35.93		8544	0.7379	6695	1383			6.41	Si
SLU 2	14.6	-581	227	-210.82		110015	0.0189	10833	57			0.25	No, Vu<V
SLU 26	11.45	-2143	-343	-57.09		10374	0.7379	6939	1434			4.18	Si
SLU 26	14.6	-904	361	-325.41		118766	0.0272	10833	82			0.23	No, Vu<V

Comb.	Quota	N	V par	M	σ0	σN	l'	fvd	Vt scorr.	Vt fess.diag.	Vt,lim	c.s.	Verifica
SLU 65	11.45	-2408	-334	-57		11654	0.7379	7109	1469			4.4	Si
SLU 65	14.6	-817	311	-294.02		107335	0.0272	10833	82			0.27	No, Vu<V
SLU 23	11.45	-1932	-296	-51.2		9351	0.7379	6802	1405			4.75	Si
SLU 23	14.6	-670	256	-242.81		123308	0.0194	10833	59			0.23	No, Vu<V
SLU 68	11.45	-2619	-382	-62.89		12677	0.7379	7246	1497			3.92	Si
SLU 68	14.6	-1051	415	-376.62		116795	0.0321	10833	98			0.23	No, Vu<V
SLU 47	11.45	-2452	-302	-47.62		11870	0.7379	7138	1475			4.89	Si
SLU 47	14.6	-963	386	-344.63		104198	0.033	10833	100			0.26	No, Vu<V
SLU 51	11.45	-2668	-351	-53.85		12914	0.7379	7277	1504			4.29	Si
SLU 51	14.6	-1201	486	-425.81		98760	0.0434	10833	132			0.27	No, Vu<V

Verifica a taglio nel piano secondo D.M. 17-01-18 (N.T.C.) §7.8.2.2.2 con rottura per scorrimento in combinazioni sismiche, γM = 2

Comb.	Quota	N	V par	M	σ0	σN	l'	fvd	Vt scorr.	Vt fess.diag.	Vt,lim	c.s.	Verifica
SLV 9	11.45	-1752	1290	470.75		20797	0.3009	12493	1053			0.82	No, Vu<V
SLV 9	14.6	-522	2367	-749.92		0	0	8333	0			0	No, Vu<V
SLV 13	11.45	-1275	952	323.88		13215	0.3445	10976	1059			1.11	Si
SLV 13	14.6	-879	2321	-700.16		0	0	8333	0			0	No, Vu<V
SLV 5	11.45	-2110	794	328.97		11792	0.6392	10692	1913			2.41	Si
SLV 5	14.6	-332	1406	-536.94		0	0	8333	0			0	No, Vu<V
SLV 14	11.45	-1275	952	323.88		13215	0.3445	10976	1059			1.11	Si
SLV 14	14.6	-879	2321	-700.16		0	0	8333	0			0	No, Vu<V
SLV 7	11.45	-1938	-1825	-563.25		29460	0.235	14225	936			0.51	No, Vu<V
SLV 7	14.6	-720	-1928	315.14		0	0	8333	0			0	No, Vu<V
SLV 6	11.45	-2110	794	328.97		11792	0.6392	10692	1913			2.41	Si
SLV 6	14.6	-332	1406	-536.94		0	0	8333	0			0	No, Vu<V
SLV 10	11.45	-1752	1290	470.75		20797	0.3009	12493	1053			0.82	No, Vu<V
SLV 10	14.6	-522	2367	-749.92		0	0	8333	0			0	No, Vu<V
SLV 4	11.45	-2416	-1487	-416.39		14631	0.5898	11260	1859			1.25	Si
SLV 4	14.6	-363	-1882	265.39		0	0	8333	0			0	No, Vu<V
SLV 8	11.45	-1938	-1825	-563.25		29460	0.235	14225	936			0.51	No, Vu<V
SLV 8	14.6	-720	-1928	315.14		0	0	8333	0			0	No, Vu<V
SLV 3	11.45	-2416	-1487	-416.39		14631	0.5898	11260	1859			1.25	Si
SLV 3	14.6	-363	-1882	265.39		0	0	8333	0			0	No, Vu<V

Verifica a pressoflessione fuori piano D.M. 17-01-18 (N.T.C.)

quota 13.025 Wa 0.05 denominatore 8 γM = 2

Comb.	fd	Sa	σ0	N	M	Mc	Coeff.s.	Verifica
SLV 14	143750	0.52	0	-520	84.29	0	0	No, e>t/2
SLV 13	143750	0.52	0	-520	84.29	0	0	No, e>t/2
SLV 10	143750	0.52	0	-503	84.29	0	0	No, e>t/2
SLV 9	143750	0.52	0	-503	84.29	0	0	No, e>t/2
SLV 5	143750	0.52	4052	-837	84.29	113.31	1.34	Si
SLV 6	143750	0.52	4052	-837	84.29	113.31	1.34	Si
SLV 15	143750	0.52	4203	-868	84.29	117.38	1.39	Si
SLV 16	143750	0.52	4203	-868	84.29	117.38	1.39	Si
SLV 2	143750	0.52	7907	-1634	84.29	213.9	2.54	Si
SLV 1	143750	0.52	7907	-1634	84.29	213.9	2.54	Si

Verifica dei meccanismi locali di collasso con analisi cinematica lineare

forza di aggancio al piano = 0 quota mezzeria = 13.025 Wa = 0.05 Ta = 0.0592

Comb.	N top	N base	V orto	α0	M*	e*	a0*	aLim	Verifica
SLV 11	-909	-1580	183	0	189.5	0.894	0	10.02695	No
SLV 9	-522	-1752	-254	0	153.5	0.889	0	10.02695	No
SLV 5	-332	-2110	-186	0	137.4	0.896	0	10.02695	No
SLV 8	-720	-1938	251	0	171.6	0.89	0	10.02695	No
SLV 4	-363	-2416	176	0	139.9	0.894	0	11.09238	No
SLV 7	-720	-1938	251	0	171.6	0.89	0	10.02695	No
SLV 10	-522	-1752	-254	0	153.5	0.889	0	10.02695	No
SLV 3	-363	-2416	176	0	139.9	0.894	0	11.09238	No
SLV 6	-332	-2110	-186	0	137.4	0.896	0	10.02695	No
SLV 12	-909	-1580	183	0	189.5	0.894	0	10.02695	No

Tabella dei coefficienti di sicurezza minimi

Stato limite	Coeff.s.	Comb.	Verifica
PF_SLU	0.96	SLU 72	No
V_SLU	0.229	SLU 26	No
PF_SLV	0	SLV 3	No
V_SLV	0	SLV 3	No
PFFP_SLV	0	SLV 9	No
R_SLV	0	SLV 3	No

Maschio 236

Verifiche condotte secondo D.M. 17-01-18 (N.T.C.)

Dati geometrici

X ini.	Y ini.	X fin.	Y fin.	Quota i.	Quota.s	l	Sp.	h netta	h ini.	h fin.	a	a.s.,sx	a.s.,dx
-19.595	1.046	-19.595	1.283	L6	L7	0.236	0.14	3.15	3.15	3.15			

Caratteristiche del materiale

(Circolare 7 21-01-19 C8.5.I) Muratura in mattoni pieni e malta di calce LC2_Corti

fb	fk	fvk0	fmedio	τ0	fv0	μ	ϕ	fv,lim	E	G	FC
600000			345000	9000	20000	0.58	0.77	32500	320000000	128000000	1.2

Verifica a pressoflessione nel piano secondo D.M. 17-01-18 NTC §7.8.2.2.1 in combinazioni non sismiche, γM = 3

Comb.	Quota	N	M	σ0	Mu	c.s.	Verifica
SLU 34	11.45	-1045	38.96	31554	75.68	1.942	Si
SLU 34	13.55	-182	-33.71	0	0	0	No, e>l/2
SLU 35	11.45	-1222	44.39	36896	79.02	1.78	Si
SLU 35	13.55	-262	-39.1	0	0	0	No, e>l/2
SLU 41	11.45	-1087	43.43	32827	76.73	1.767	Si
SLU 41	13.55	-132	-37.88	0	0	0	No, e>l/2
SLU 38	11.45	-1168	42.16	35287	78.3	1.857	Si
SLU 38	13.55	-259	-36.85	0	0	0	No, e>l/2
SLU 33	11.45	-1098	41.15	33171	76.98	1.871	Si
SLU 33	13.55	-184	-35.88	0	0	0	No, e>l/2
SLU 37	11.45	-1168	42.32	35263	78.29	1.85	Si
SLU 37	13.55	-259	-37.07	0	0	0	No, e>l/2
SLU 39	11.45	-963	40.34	29077	73.2	1.815	Si
SLU 39	13.55	-53	-34.89	0	0	0	No, e>l/2
SLU 40	11.45	-964	40.18	29102	73.23	1.823	Si
SLU 40	13.55	-54	-34.67	0	0	0	No, e>l/2
SLU 36	11.45	-1222	44.23	36920	79.03	1.787	Si
SLU 36	13.55	-262	-38.88	0	0	0	No, e>l/2
SLU 42	11.45	-1088	43.26	32851	76.75	1.774	Si
SLU 42	13.55	-132	-37.66	0	0	0	No, e>l/2

Verifica a pressoflessione nel piano secondo D.M. 17-01-18 NTC §7.8.2.2.1 in combinazioni sismiche, γM = 2

Comb.	Quota	N	M	σ0	Mu	c.s.	Verifica
SLV 6	11.45	1035	-144.25	0	0	0	No, Trazione
SLV 6	13.55	-1406	89.49	42470	108.48	1.212	Si
SLV 12	11.45	-2552	191.48	77065	111.42	0.582	No, M>Mu
SLV 12	13.55	978	-128.98	0	0	0	No, Trazione
SLV 7	11.45	-2850	224.01	86064	99.61	0.445	No, M>Mu
SLV 7	13.55	819	-126.13	0	0	0	No, Trazione
SLV 9	11.45	1333	-176.78	0	0	0	No, Trazione
SLV 9	13.55	-1247	86.64	37659	102	1.177	Si
SLV 3	11.45	-1838	133.07	55499	118.59	0.891	No, M>Mu
SLV 3	13.55	-146	-47.34	0	0	0	No, e>l/2
SLV 5	11.45	1035	-144.25	0	0	0	No, Trazione
SLV 5	13.55	-1406	89.49	42470	108.48	1.212	Si
SLV 4	11.45	-1838	133.07	55499	118.59	0.891	No, M>Mu
SLV 4	13.55	-146	-47.34	0	0	0	No, e>l/2
SLV 8	11.45	-2850	224.01	86064	99.61	0.445	No, M>Mu
SLV 8	13.55	819	-126.13	0	0	0	No, Trazione
SLV 10	11.45	1333	-176.78	0	0	0	No, Trazione
SLV 10	13.55	-1247	86.64	37659	102	1.177	Si
SLV 11	11.45	-2552	191.48	77065	111.42	0.582	No, M>Mu
SLV 11	13.55	978	-128.98	0	0	0	No, Trazione

Verifica a taglio nel piano secondo D.M. 17-01-18 (N.T.C.) §7.8.2.2.2 con rottura per scorrimento in combinazioni non sismiche, γM = 3

Comb.	Quota	N	V par	M	σ0	σN	l'	fvd	Vt scorr.	Vt fess.diag.	Vt,lim	c.s.	Verifica
SLU 39	11.45	-963	82	40.34		30024	0.229	9559	307			3.75	Si
SLU 39	13.55	-53	79	-34.89		0	0	5556	0			0	No, Vu<V
SLU 38	11.45	-1168	84	42.16		35287	0.2365	10261	340			4.05	Si
SLU 38	13.55	-259	81	-36.85		0	0	5556	0			0	No, Vu<V
SLU 36	11.45	-1222	89	44.23		36920	0.2365	10478	347			3.91	Si
SLU 36	13.55	-262	86	-38.88		0	0	5556	0			0	No, Vu<V
SLU 41	11.45	-1087	87	43.43		33053	0.2349	9963	328			3.75	Si
SLU 41	13.55	-132	85	-37.88		0	0	5556	0			0	No, Vu<V
SLU 34	11.45	-1045	78	38.96		31554	0.2365	9763	323			4.14	Si
SLU 34	13.55	-182	75	-33.71		0	0	5556	0			0	No, Vu<V
SLU 33	11.45	-1098	83	41.15		33171	0.2365	9978	330			3.98	Si
SLU 33	13.55	-184	80	-35.88		0	0	5556	0			0	No, Vu<V
SLU 40	11.45	-964	82	40.18		29970	0.2296	9552	307			3.76	Si
SLU 40	13.55	-54	79	-34.67		0	0	5556	0			0	No, Vu<V
SLU 35	11.45	-1222	89	44.39		36896	0.2365	10475	347			3.91	Si
SLU 35	13.55	-262	86	-39.1		0	0	5556	0			0	No, Vu<V
SLU 42	11.45	-1088	87	43.26		33002	0.2354	9956	328			3.76	Si
SLU 42	13.55	-132	85	-37.66		0	0	5556	0			0	No, Vu<V
SLU 37	11.45	-1168	84	42.32		35263	0.2365	10257	340			4.05	Si
SLU 37	13.55	-259	81	-37.07		0	0	5556	0			0	No, Vu<V

Verifica a taglio nel piano secondo D.M. 17-01-18 (N.T.C.) §7.8.2.2.2 con rottura per scorrimento in combinazioni sismiche, γM = 2

Comb.	Quota	N	V par	M	σ0	σN	l'	fvd	Vt scorr.	Vt fess.diag.	Vt,lim	c.s.	Verifica
SLV 4	11.45	-1838	297	133.07		95468	0.1375	16250	313			1.05	Si
SLV 4	13.55	-146	115	-47.34		0	0	8333	0			0	No, Vu<V
SLV 5	11.45	1035	-389	-144.25		0	0	8333	0			0	No, Vu<V
SLV 5	13.55	-1406	-119	89.49		61313	0.1638	16250	373			3.14	Si
SLV 11	11.45	-2552	480	191.48		140616	0.1296	16250	295			0.61	No, Vu<V
SLV 11	13.55	978	206	-128.98		0	0	8333	0			0	No, Vu<V
SLV 10	11.45	1333	-456	-176.78		0	0	8333	0			0	No, Vu<V
SLV 10	13.55	-1247	-131	86.64		60883	0.1463	16250	333			2.54	Si
SLV 3	11.45	-1838	297	133.07		95468	0.1375	16250	313			1.05	Si
SLV 3	13.55	-146	115	-47.34		0	0	8333	0			0	No, Vu<V
SLV 9	11.45	1333	-456	-176.78		0	0	8333	0			0	No, Vu<V
SLV 9	13.55	-1247	-131	86.64		60883	0.1463	16250	333			2.54	Si
SLV 6	11.45	1035	-389	-144.25		0	0	8333	0			0	No, Vu<V
SLV 6	13.55	-1406	-119	89.49		61313	0.1638	16250	373			3.14	Si
SLV 8	11.45	-2850	547	224.01		171181	0.1189	16250	270			0.49	No, Vu<V
SLV 8	13.55	819	218	-126.13		0	0	8333	0			0	No, Vu<V
SLV 7	11.45	-2850	547	224.01		171181	0.1189	16250	270			0.49	No, Vu<V
SLV 7	13.55	819	218	-126.13		0	0	8333	0			0	No, Vu<V
SLV 12	11.45	-2552	480	191.48		140616	0.1296	16250	295			0.61	No, Vu<V
SLV 12	13.55	978	206	-128.98		0	0	8333	0			0	No, Vu<V

Verifica a pressoflessione fuori piano D.M. 17-01-18 (N.T.C.)

quota 13.025 Wa 0.03 denominatore 8 γM = 2

Comb.	fd	Sa	σ0	N	M	Mc	Coeff.s.	Verifica
SLV 8	143750	0.52	0	107	14.12	0	0	No, Trazione
SLV 15	143750	0.52	0	77	14.12	0	0	No, Trazione
SLV 16	143750	0.52	0	77	14.12	0	0	No, Trazione
SLV 11	143750	0.52	0	268	14.12	0	0	No, Trazione
SLV 12	143750	0.52	0	268	14.12	0	0	No, Trazione
SLV 7	143750	0.52	0	107	14.12	0	0	No, Trazione
SLV 13	143750	0.52	7499	-248	14.12	16.31	1.16	Si
SLV 14	143750	0.52	7499	-248	14.12	16.31	1.16	Si
SLV 3	143750	0.52	13899	-460	14.12	28.55	2.02	Si
SLV 4	143750	0.52	13899	-460	14.12	28.55	2.02	Si

Verifica dei meccanismi locali di collasso con analisi cinematica lineare

forza di aggancio al piano = 0 quota mezzeria = 13.025 Wa = 0.03 Ta = 0.1184

Comb.	N top	N base	V orto	α0	M*	e*	a0*	aLim	Verifica
SLV 5	210	1035	0	0	0	0	0	20.8876	No, Trazione
SLV 13	123	321	0	0	0	0	0	21.1064	No, Trazione
SLV 14	123	321	0	0	0	0	0	21.1064	No, Trazione
SLV 6	210	1035	0	0	0	0	0	20.8876	No, Trazione
SLV 9	291	1333	0	0	0	0	0	20.8876	No, Trazione
SLV 10	291	1333	0	0	0	0	0	20.8876	No, Trazione
SLV 7	-540	-2850	0	0.025	69.8	0.941	0.38589	20.8876	No
SLV 8	-540	-2850	0	0.025	69.8	0.941	0.38589	20.8876	No
SLV 4	-372	-1838	1	0.025	52.8	0.926	0.3998	21.1064	No
SLV 3	-372	-1838	1	0.025	52.8	0.926	0.3998	21.1064	No

Tabella dei coefficienti di sicurezza minimi

Stato limite	Coeff.s.	Comb.	Verifica
PF_SLU	0	SLU 10	No
V_SLU	0	SLU 10	No
PF_SLV	0	SLV 16	No
V_SLV	0	SLV 3	No
PFFP_SLV	0	SLV 16	No
R_SLV	0	SLV 14	No

Maschio 237

Verifiche condotte secondo D.M. 17-01-18 (N.T.C.)

Dati geometrici

X ini.	Y ini.	X fin.	Y fin.	Quota i.	Quota.s	l	Sp.	h netta	h ini.	h fin.	a	a.s.,sx	a.s.,dx
-19.595	1.983	-19.595	5.658	L6	L7	3.675	0.14	3.15	3.15	3.15			

Caratteristiche del materiale

(Circolare 7 21-01-19 C8.5.I) Muratura in mattoni pieni e malta di calce LC2_Corti

fb	fk	fvk0	fmedio	τ0	fv0	μ	ϕ	fv,lim	E	G	FC
600000			345000	9000	20000	0.58	0.77	32500	320000000	128000000	1.2

Verifica a pressoflessione nel piano secondo D.M. 17-01-18 NTC §7.8.2.2.1 in combinazioni non sismiche, γM = 3

Comb.	Quota	N	M	σ0	Mu	c.s.	Verifica
SLU 32	11.45	-5620	552.51	10923	8941.11	16.183	Si
SLU 32	13.55	-3155	-530.14	6133	5361.52	10.113	Si
SLU 81	11.45	-6449	521.6	12535	10026.66	19.223	Si
SLU 81	13.55	-3403	-606.18	6614	5744.89	9.477	Si
SLU 18	11.45	-4814	399.24	9358	7830.15	19.613	Si
SLU 18	13.55	-2518	-472.1	4895	4349.52	9.213	Si
SLU 19	11.45	-4807	385.76	9343	7819.19	20.269	Si
SLU 19	13.55	-2514	-460.05	4886	4341.93	9.438	Si
SLU 39	11.45	-5312	512.22	10324	8522.89	16.639	Si
SLU 39	13.55	-2824	-628.36	5490	4840.03	7.703	Si
SLU 31	11.45	-5162	418.11	10034	8317.3	19.893	Si
SLU 31	13.55	-2744	-498.06	5334	4712.43	9.462	Si
SLU 82	11.45	-6442	508.13	12520	10016.8	19.713	Si
SLU 82	13.55	-3398	-594.14	6605	5737.65	9.657	Si
SLU 40	11.45	-5304	498.74	10309	8512.26	17.067	Si
SLU 40	13.55	-2820	-616.32	5481	4832.56	7.841	Si
SLU 33	11.45	-5612	539.03	10907	8930.69	16.568	Si
SLU 33	13.55	-3151	-518.1	6124	5354.19	10.334	Si
SLU 41	11.45	-5663	587.36	11007	8999.31	15.322	Si
SLU 41	13.55	-3200	-525.25	6219	5430.26	10.338	Si

Verifica a pressoflessione nel piano secondo D.M. 17-01-18 NTC §7.8.2.2.1 in combinazioni sismiche, γM = 2

Comb.	Quota	N	M	σ0	Mu	c.s.	Verifica
SLV 12	11.45	-4050	6329.7	7872	6962.59	1.1	Si
SLV 12	13.55	-2711	-6728.71	0	0	0	No, e>l/2
SLV 10	11.45	-4553	-7342.64	8849	7759.25	1.057	Si
SLV 10	13.55	-1857	7287.8	0	0	0	No, e>l/2
SLV 11	11.45	-4050	6329.7	7872	6962.59	1.1	Si
SLV 11	13.55	-2711	-6728.71	0	0	0	No, e>l/2
SLV 14	11.45	-3696	-4300.12	7183	6391.6	1.486	Si
SLV 14	13.55	-1855	3554.13	0	0	0	No, e>l/2
SLV 5	11.45	-5136	-5848.81	9983	8666.4	1.482	Si
SLV 5	13.55	-2115	6283.13	0	0	0	No, e>l/2
SLV 6	11.45	-5136	-5848.81	9983	8666.4	1.482	Si
SLV 6	13.55	-2115	6283.13	0	0	0	No, e>l/2

Comb.	Quota	N	M	σ0	Mu	c.s.	Verifica
SLV 8	11.45	-4634	7823.53	9007	7886.87	1.008	Si
SLV 8	13.55	-2969	-7733.37	0	0	0	No, e>l/2
SLV 7	11.45	-4634	7823.53	9007	7886.87	1.008	Si
SLV 7	13.55	-2969	-7733.37	0	0	0	No, e>l/2
SLV 13	11.45	-3696	-4300.12	7183	6391.6	1.486	Si
SLV 13	13.55	-1855	3554.13	0	0	0	No, e>l/2
SLV 9	11.45	-4553	-7342.64	8849	7759.25	1.057	Si
SLV 9	13.55	-1857	7287.8	0	0	0	No, e>l/2

Verifica a taglio nel piano secondo D.M. 17-01-18 (N.T.C.) §7.8.2.2.2 con rottura per scorrimento in combinazioni non sismiche, γM = 3

Comb.	Quota	N	V par	M	σ0	σN	l'	fvd	Vt scorr.	Vt fess.diag.	Vt,lim	c.s.	Verifica
SLU 80	11.45	-7008	438	586.76		13621	3.6749	7372	3793			8.66	Si
SLU 80	13.55	-4076	-28	-277.69		7923	3.6749	6612	3402			122.16	Si
SLU 35	11.45	-5971	423	627.65		11605	3.6749	7103	3654			8.63	Si
SLU 35	13.55	-3531	11	-427.04		6862	3.6749	6471	3329			303.24	Si
SLU 81	11.45	-6449	430	521.6		12535	3.6749	7227	3718			8.64	Si
SLU 81	13.55	-3403	82	-606.18		6614	3.6749	6437	3312			40.42	Si
SLU 41	11.45	-5663	419	587.36		11007	3.6749	7023	3613			8.63	Si
SLU 41	13.55	-3200	54	-525.25		6219	3.6749	6385	3285			61.29	Si
SLU 78	11.45	-7101	451	623.56		13801	3.6749	7396	3805			8.44	Si
SLU 78	13.55	-4104	-10	-392.81		7977	3.6749	6619	3406			340.67	Si
SLU 79	11.45	-7016	448	600.23		13636	3.6749	7374	3794			8.47	Si
SLU 79	13.55	-4081	-18	-289.73		7932	3.6749	6613	3402			190.51	Si
SLU 77	11.45	-7108	461	637.03		13817	3.6749	7398	3806			8.26	Si
SLU 77	13.55	-4109	0	-404.86		7987	3.6749	6620	3406			1000	Si
SLU 84	11.45	-6793	446	583.27		13203	3.6749	7316	3764			8.43	Si
SLU 84	13.55	-3773	33	-491.03		7334	3.6749	6533	3361			103.04	Si
SLU 74	11.45	-6757	435	561.89		13134	3.6749	7307	3759			8.65	Si
SLU 74	13.55	-3734	39	-507.96		7257	3.6749	6523	3356			85.33	Si
SLU 83	11.45	-6801	456	596.74		13218	3.6749	7318	3765			8.25	Si
SLU 83	13.55	-3778	43	-503.07		7343	3.6749	6535	3362			78.9	Si

Verifica a taglio nel piano secondo D.M. 17-01-18 (N.T.C.) §7.8.2.2.2 con rottura per scorrimento in combinazioni sismiche, γM = 2

Comb.	Quota	N	V par	M	σ0	σN	l'	fvd	Vt scorr.	Vt fess.diag.	Vt,lim	c.s.	Verifica
SLV 5	11.45	-5136	-7987	-5848.81		17502	2.0961	11834	3473			0.43	No, Vu<V
SLV 5	13.55	-2115	-6405	6283.13		0	0	8333	0			0	No, Vu<V
SLV 7	11.45	-4634	8877	7823.53		73991	0.4473	16250	1018			0.11	No, Vu<V
SLV 7	13.55	-2969	7393	-7733.37		0	0	8333	0			0	No, Vu<V
SLV 6	11.45	-5136	-7987	-5848.81		17502	2.0961	11834	3473			0.43	No, Vu<V
SLV 6	13.55	-2115	-6405	6283.13		0	0	8333	0			0	No, Vu<V
SLV 13	11.45	-3696	-2929	-4300.12		13057	2.0218	10945	3098			1.06	Si
SLV 13	13.55	-1855	-3644	3554.13		0	0	8333	0			0	No, Vu<V
SLV 9	11.45	-4553	-8376	-7342.64		48265	0.6737	16250	1533			0.18	No, Vu<V
SLV 9	13.55	-1857	-7359	7287.8		0	0	8333	0			0	No, Vu<V
SLV 11	11.45	-4050	8487	6329.7		35112	0.8239	15356	1771			0.21	No, Vu<V
SLV 11	13.55	-2711	6438	-6728.71		0	0	8333	0			0	No, Vu<V
SLV 12	11.45	-4050	8487	6329.7		35112	0.8239	15356	1771			0.21	No, Vu<V
SLV 12	13.55	-2711	6438	-6728.71		0	0	8333	0			0	No, Vu<V
SLV 10	11.45	-4553	-8376	-7342.64		48265	0.6737	16250	1533			0.18	No, Vu<V
SLV 10	13.55	-1857	-7359	7287.8		0	0	8333	0			0	No, Vu<V
SLV 14	11.45	-3696	-2929	-4300.12		13057	2.0218	10945	3098			1.06	Si
SLV 14	13.55	-1855	-3644	3554.13		0	0	8333	0			0	No, Vu<V
SLV 8	11.45	-4634	8877	7823.53		73991	0.4473	16250	1018			0.11	No, Vu<V
SLV 8	13.55	-2969	7393	-7733.37		0	0	8333	0			0	No, Vu<V

Verifica a pressoflessione fuori piano D.M. 17-01-18 (N.T.C.)

quota 13.025 Wa 0.03 denominatore 8 γM = 2

Comb.	fd	Sa	σ0	N	M	Mc	Coeff.s.	Verifica
SLV 5	143750	0.52	0	-2445	219.44	0	0	No, e>t/2
SLV 15	143750	0.52	0	-2664	219.44	0	0	No, e>t/2
SLV 13	143750	0.52	0	-2297	219.44	0	0	No, e>t/2
SLV 10	143750	0.52	0	-2179	219.44	0	0	No, e>t/2
SLV 16	143750	0.52	0	-2664	219.44	0	0	No, e>t/2
SLV 9	143750	0.52	0	-2179	219.44	0	0	No, e>t/2
SLV 6	143750	0.52	0	-2445	219.44	0	0	No, e>t/2
SLV 14	143750	0.52	0	-2297	219.44	0	0	No, e>t/2
SLV 2	143750	0.52	6186	-3183	219.44	211.51	0.96	No, M>Mu
SLV 1	143750	0.52	6186	-3183	219.44	211.51	0.96	No, M>Mu

Verifica dei meccanismi locali di collasso con analisi cinematica lineare

forza di aggancio al piano = 0 quota mezzeria = 13.025 Wa = 0.03 Ta = 0.1184

Comb.	N top	N base	V orto	α0	M*	e*	a0*	aLim	Verifica
SLV 13	-2212	-3696	20	0.026	466.9	0.893	0.41608	21.1064	No
SLV 14	-2212	-3696	20	0.026	466.9	0.893	0.41608	21.1064	No
SLV 16	-1628	-3545	17	0.027	412	0.889	0.44373	21.1064	No
SLV 15	-1628	-3545	17	0.027	412	0.889	0.44373	21.1064	No
SLV 3	-860	-5491	-20	0.027	344.8	0.896	0.44424	21.1064	No
SLV 4	-860	-5491	-20	0.027	344.8	0.896	0.44424	21.1064	No
SLV 1	-1444	-5641	-18	0.027	395.1	0.889	0.44709	21.1064	No
SLV 2	-1444	-5641	-18	0.027	395.1	0.889	0.44709	21.1064	No
SLV 10	-2624	-4553	10	0.028	506.7	0.897	0.44757	20.8876	No
SLV 9	-2624	-4553	10	0.028	506.7	0.897	0.44757	20.8876	No

Tabella dei coefficienti di sicurezza minimi

Stato limite	Coeff.s.	Comb.	Verifica
PF_SLU	7.703	SLU 39	Si
V_SLU	8.251	SLU 83	Si
PF_SLV	0	SLV 5	No
V_SLV	0	SLV 5	No

Stato limite	Coeff.s.	Comb.	Verifica
PFFP_SLV	0	SLV 5	No
R_SLV	0.02	SLV 13	No

Maschio 238

Verifiche condotte secondo D.M. 17-01-18 (N.T.C.)

Dati geometrici

X ini.	Y ini.	X fin.	Y fin.	Quota i.	Quota.s	l	Sp.	h netta	h ini.	h fin.	a	a.s.,sx	a.s.,dx
-16.2	-3.254	-17.275	-3.254	L6	L7	1.075	0.28	3.15	3.15	3.15			

Caratteristiche del materiale

(Circolare 7 21-01-19 C8.5.I) Muratura in mattoni pieni e malta di calce LC2_Corti

fb	fk	fvk0	fmedio	τ0	fv0	μ	ϕ	fv,lim	E	G	FC
600000			345000	9000	20000	0.58	0.77	32500	320000000	128000000	1.2

Verifica a pressoflessione nel piano secondo D.M. 17-01-18 NTC §7.8.2.2.1 in combinazioni non sismiche, γM = 3

Comb.	Quota	N	M	σ0	Mu	c.s.	Verifica
SLU 83	12.35	-2529	-221.9	8402	1219.1	5.494	Si
SLU 83	14.25	-1243	316.4	4130	634.36	2.005	Si
SLU 81	12.35	-2123	-249.48	7053	1042.2	4.178	Si
SLU 81	14.25	-969	281.82	3219	500.14	1.775	Si
SLU 64	12.35	-2471	-208.89	8210	1194.32	5.717	Si
SLU 64	14.25	-1112	277.25	3694	570.53	2.058	Si
SLU 39	12.35	-1521	-226.27	5055	767.02	3.39	Si
SLU 39	14.25	-734	236.94	2438	382.58	1.615	Si
SLU 60	12.35	-2186	-198.91	7262	1070.08	5.38	Si
SLU 60	14.25	-925	243.19	3074	478.52	1.968	Si
SLU 20	12.35	-1991	-148.13	6613	983.04	6.636	Si
SLU 20	14.25	-965	232.9	3205	498.09	2.139	Si
SLU 41	12.35	-1928	-198.7	6404	954.63	4.804	Si
SLU 41	14.25	-1008	271.53	3350	519.63	1.914	Si
SLU 22	12.35	-1870	-185.69	6212	928.32	4.999	Si
SLU 22	14.25	-877	232.37	2913	454.45	1.956	Si
SLU 18	12.35	-1584	-175.71	5264	796.55	4.533	Si
SLU 18	14.25	-690	198.31	2293	360.51	1.818	Si
SLU 32	12.35	-2204	-193.5	7324	1078.36	5.573	Si
SLU 32	14.25	-1235	290.41	4102	630.22	2.17	Si

Verifica a pressoflessione nel piano secondo D.M. 17-01-18 NTC §7.8.2.2.1 in combinazioni sismiche, γM = 2

Comb.	Quota	N	M	σ0	Mu	c.s.	Verifica
SLV 11	12.35	351	-414.95	0	0	0	No, Trazione
SLV 11	14.25	936	-282.74	0	0	0	No, Trazione
SLV 9	12.35	-2388	-1391.92	0	0	0	No, e>l/2
SLV 9	14.25	-2711	1710.07	0	0	0	No, e>l/2
SLV 10	12.35	-2388	-1391.92	0	0	0	No, e>l/2
SLV 10	14.25	-2711	1710.07	0	0	0	No, e>l/2
SLV 3	12.35	-4190	2474.66	0	0	0	No, e>l/2
SLV 3	14.25	-35	-1786.47	0	0	0	No, e>l/2
SLV 1	12.35	-5011	2181.57	16649	2326.51	1.066	Si
SLV 1	14.25	-1130	-1188.63	0	0	0	No, e>l/2
SLV 7	12.35	-1302	1076.54	0	0	0	No, e>l/2
SLV 7	14.25	1077	-1298.68	0	0	0	No, Trazione
SLV 12	12.35	351	-414.95	0	0	0	No, Trazione
SLV 12	14.25	936	-282.74	0	0	0	No, Trazione
SLV 4	12.35	-4190	2474.66	0	0	0	No, e>l/2
SLV 4	14.25	-35	-1786.47	0	0	0	No, e>l/2
SLV 2	12.35	-5011	2181.57	16649	2326.51	1.066	Si
SLV 2	14.25	-1130	-1188.63	0	0	0	No, e>l/2
SLV 8	12.35	-1302	1076.54	0	0	0	No, e>l/2
SLV 8	14.25	1077	-1298.68	0	0	0	No, Trazione

Verifica a taglio nel piano secondo D.M. 17-01-18 (N.T.C.) §7.8.2.2.2 con rottura per scorrimento in combinazioni non sismiche, γM = 3

Comb.	Quota	N	V par	M	σ0	σN	l'	fvd	Vt scorr.	Vt fess.diag.	Vt,lim	c.s.	Verifica
SLU 75	12.35	-2816	-772	-199.81		9355	1.075	6803	2048			2.65	Si
SLU 75	14.25	-1451	172	259.14		4821	1.075	6198	1866			10.83	Si
SLU 79	12.35	-3040	-827	-182.15		10099	1.075	6902	2077			2.51	Si
SLU 79	14.25	-1561	89	349.62		5927	0.9404	6346	1671			18.83	Si
SLU 74	12.35	-2806	-833	-216.71		9322	1.075	6798	2046			2.46	Si
SLU 74	14.25	-1470	50	335.29		5656	0.9281	6310	1640			32.79	Si
SLU 39	12.35	-1521	-763	-226.27		5055	1.075	6230	1875			2.46	Si
SLU 39	14.25	-734	20	236.94		4071	0.6437	6098	1099			55.63	Si
SLU 83	12.35	-2529	-864	-221.9		8402	1.075	6676	2009			2.33	Si
SLU 83	14.25	-1243	60	316.4		5230	0.849	6253	1486			24.61	Si
SLU 77	12.35	-3212	-838	-189.13		10671	1.075	6978	2100			2.51	Si
SLU 77	14.25	-1744	76	369.88		6381	0.9763	6406	1751			22.94	Si
SLU 81	12.35	-2123	-859	-249.48		7053	1.075	6496	1955			2.28	Si
SLU 81	14.25	-969	34	281.82		4677	0.7398	6179	1280			37.58	Si
SLU 82	12.35	-2133	-798	-232.58		7085	1.075	6500	1957			2.45	Si
SLU 82	14.25	-950	156	205.67		3523	0.963	6025	1625			10.39	Si
SLU 41	12.35	-1928	-768	-198.7		6404	1.075	6409	1929			2.51	Si
SLU 41	14.25	-1008	46	271.53		4476	0.8045	6152	1386			30.06	Si
SLU 84	12.35	-2539	-803	-205		8435	1.075	6680	2011			2.5	Si
SLU 84	14.25	-1225	183	240.26		4271	1.0239	6125	1756			9.61	Si

Verifica a taglio nel piano secondo D.M. 17-01-18 (N.T.C.) §7.8.2.2.2 con rottura per scorrimento in combinazioni sismiche, γM = 2

Comb.	Quota	N	V par	M	σ0	σN	l'	fvd	Vt scorr.	Vt fess.diag.	Vt,lim	c.s.	Verifica
SLV 7	12.35	-1302	4066	1076.54		0	0	8333	0			0	No, Vu<V
SLV 7	14.25	1077	2104	-1298.68		0	0	8333	0			0	No, Vu<V
SLV 4	12.35	-4190	4713	2474.66		0	0	8333	0			0	No, Vu<V
SLV 4	14.25	-35	656	-1786.47		0	0	8333	0			0	No, Vu<V
SLV 8	12.35	-1302	4066	1076.54		0	0	8333	0			0	No, Vu<V
SLV 8	14.25	1077	2104	-1298.68		0	0	8333	0			0	No, Vu<V
SLV 10	12.35	-2388	-5166	-1391.92		0	0	8333	0			0	No, Vu<V
SLV 10	14.25	-2711	-2039	1710.07		0	0	8333	0			0	No, Vu<V
SLV 11	12.35	351	1509	-414.95		0	0	8333	0			0	No, Vu<V
SLV 11	14.25	936	2102	-282.74		0	0	8333	0			0	No, Vu<V
SLV 9	12.35	-2388	-5166	-1391.92		0	0	8333	0			0	No, Vu<V
SLV 9	14.25	-2711	-2039	1710.07		0	0	8333	0			0	No, Vu<V
SLV 1	12.35	-5011	2710	2181.57		58396	0.3065	16250	1394			0.51	No, Vu<V
SLV 1	14.25	-1130	-587	-1188.63		0	0	8333	0			0	No, Vu<V
SLV 12	12.35	351	1509	-414.95		0	0	8333	0			0	No, Vu<V
SLV 12	14.25	936	2102	-282.74		0	0	8333	0			0	No, Vu<V
SLV 2	12.35	-5011	2710	2181.57		58396	0.3065	16250	1394			0.51	No, Vu<V
SLV 2	14.25	-1130	-587	-1188.63		0	0	8333	0			0	No, Vu<V
SLV 3	12.35	-4190	4713	2474.66		0	0	8333	0			0	No, Vu<V
SLV 3	14.25	-35	656	-1786.47		0	0	8333	0			0	No, Vu<V

Verifica a pressoflessione fuori piano D.M. 17-01-18 (N.T.C.)

quota 13.025 Wa 0.05 denominatore 8 γM = 2

Comb.	fd	Sa	σ0	N	M	Mc	Coeff.s.	Verifica
SLV 9	143750	0.52	0	-234	120.01	0	0	No, e>t/2
SLV 13	143750	0.52	0	1627	120.01	0	0	No, Trazione
SLV 11	143750	0.52	0	-663	120.01	0	0	No, e>t/2
SLV 16	143750	0.52	0	1499	120.01	0	0	No, Trazione
SLV 15	143750	0.52	0	1499	120.01	0	0	No, Trazione
SLV 14	143750	0.52	0	1627	120.01	0	0	No, Trazione
SLV 12	143750	0.52	0	-663	120.01	0	0	No, e>t/2
SLV 10	143750	0.52	0	-234	120.01	0	0	No, e>t/2
SLV 5	143750	0.52	6505	-1958	120.01	259.51	2.16	Si
SLV 6	143750	0.52	6505	-1958	120.01	259.51	2.16	Si

Verifica dei meccanismi locali di collasso con analisi cinematica lineare

forza di aggancio al piano = 0 quota mezzeria = 13.025 Wa = 0.05 Ta = 0.0592

Comb.	N top	N base	V orto	α0	M*	e*	a0*	aLim	Verifica
SLV 16	87	-1944	-17	0	0	0	0	11.09238	No, Trazione
SLV 7	206	4178	13	0	0	0	0	10.02695	No, Trazione
SLV 15	87	-1944	-17	0	0	0	0	11.09238	No, Trazione
SLV 12	427	3364	6	0	0	0	0	10.02695	No, Trazione
SLV 8	206	4178	13	0	0	0	0	10.02695	No, Trazione
SLV 3	-650	768	6	0	0	0	0	11.09238	No, Trazione
SLV 11	427	3364	6	0	0	0	0	10.02695	No, Trazione
SLV 4	-650	768	6	0	0	0	0	11.09238	No, Trazione
SLV 10	-1281	-9090	-37	0.045	271.9	0.893	0.73354	10.02695	No
SLV 9	-1281	-9090	-37	0.045	271.9	0.893	0.73354	10.02695	No

Tabella dei coefficienti di sicurezza minimi

Stato limite	Coeff.s.	Comb.	Verifica
PF_SLU	1.615	SLU 39	Si
V_SLU	2.277	SLU 81	Si
PF_SLV	0	SLV 16	No
V_SLV	0	SLV 1	No
PFFP_SLV	0	SLV 16	No
R_SLV	0	SLV 16	No

Maschio 239

Verifiche condotte secondo D.M. 17-01-18 (N.T.C.)

Dati geometrici

X ini.	Y ini.	X fin.	Y fin.	Quota i.	Quota.s	l	Sp.	h netta	h ini.	h fin.	a	a.s.,sx	a.s.,dx
-18.448	-3.254	-18.448	0.055	L6	L7	3.31	0.14	3.15	3.15	3.15			

Caratteristiche del materiale

(Circolare 7 21-01-19 C8.5.I) Muratura in mattoni pieni e malta di calce LC2_Corti

fb	fk	fvk0	fmedio	τ0	fv0	μ	ϕ	fv,lim	E	G	FC
600000			345000	9000	20000	0.58	0.77	32500	320000000	128000000	1.2

Verifica a pressoflessione nel piano secondo D.M. 17-01-18 NTC §7.8.2.2.1 in combinazioni non sismiche, γM = 3

Comb.	Quota	N	M	σ0	Mu	c.s.	Verifica
SLU 31	11.45	-4381	348.73	9455	6408.44	18.376	Si
SLU 31	13.55	-1938	1292.28	4182	3042.45	2.354	Si
SLU 42	11.45	-4778	246.77	10313	6906.62	27.988	Si
SLU 42	13.55	-2151	1350.37	4641	3356.1	2.485	Si
SLU 76	11.45	-5644	407.55	12180	7943.47	19.491	Si
SLU 76	13.55	-2549	1578.72	5502	3934.05	2.492	Si
SLU 23	11.45	-4140	405.89	8934	6099.26	15.027	Si
SLU 23	13.55	-1850	1158.43	3992	2911.11	2.513	Si
SLU 40	11.45	-4570	298.14	9862	6646.81	22.295	Si
SLU 40	13.55	-2010	1243.94	4338	3149.49	2.532	Si
SLU 34	11.45	-4590	297.37	9905	6671.7	22.436	Si
SLU 34	13.55	-2078	1398.71	4485	3249.95	2.324	Si

Comb.	Quota	N	M	σ0	Mu	c.s.	Verifica
SLU 26	11.45	-4348	354.53	9384	6366.94	17.959	Si
SLU 26	13.55	-1990	1264.87	4295	3119.69	2.466	Si
SLU 38	11.45	-4884	219.91	10540	7036.22	31.996	Si
SLU 38	13.55	-2253	1399.44	4862	3505.95	2.505	Si
SLU 13	11.45	-4198	309.79	9060	6174.86	19.932	Si
SLU 13	13.55	-1908	1261.44	4117	2997.61	2.376	Si
SLU 10	11.45	-3990	361.15	8610	5904.43	16.349	Si
SLU 10	13.55	-1768	1155.01	3814	2788.02	2.414	Si

Verifica a pressoflessione nel piano secondo D.M. 17-01-18 NTC §7.8.2.2.1 in combinazioni sismiche, γM = 2

Comb.	Quota	N	M	σ0	Mu	c.s.	Verifica
SLV 9	11.45	-367	-5015.12	0	0	0	No, e>l/2
SLV 9	13.55	-645	5111.38	0	0	0	No, e>l/2
SLV 5	11.45	-108	-5715.16	0	0	0	No, e>l/2
SLV 5	13.55	-93	4793.44	0	0	0	No, e>l/2
SLV 14	11.45	-3403	-209.58	7345	5293.47	25.257	Si
SLV 14	13.55	-2318	2599.68	5003	3679.38	1.415	Si
SLV 6	11.45	-108	-5715.16	0	0	0	No, e>l/2
SLV 6	13.55	-93	4793.44	0	0	0	No, e>l/2
SLV 10	11.45	-367	-5015.12	0	0	0	No, e>l/2
SLV 10	13.55	-645	5111.38	0	0	0	No, e>l/2
SLV 2	11.45	-2539	-2543.04	5479	4013.1	1.578	Si
SLV 2	13.55	-478	1539.9	0	0	0	No, e>l/2
SLV 8	11.45	-7918	5681.49	17088	11270.61	1.984	Si
SLV 8	13.55	-3033	-3442.62	6546	4750.51	1.38	Si
SLV 13	11.45	-3403	-209.58	7345	5293.47	25.257	Si
SLV 13	13.55	-2318	2599.68	5003	3679.38	1.415	Si
SLV 1	11.45	-2539	-2543.04	5479	4013.1	1.578	Si
SLV 1	13.55	-478	1539.9	0	0	0	No, e>l/2
SLV 7	11.45	-7918	5681.49	17088	11270.61	1.984	Si
SLV 7	13.55	-3033	-3442.62	6546	4750.51	1.38	Si

Verifica a taglio nel piano secondo D.M. 17-01-18 (N.T.C.) §7.8.2.2.2 con rottura per scorrimento in combinazioni non sismiche, γM = 3

Comb.	Quota	N	V par	M	σ0	σN	I'	fvd	Vt scorr.	Vt fess.diag.	Vt,lim	c.s.	Verifica
SLU 26	11.45	-4348	-252	354.53		9384	3.3097	6807	3154			12.51	Si
SLU 26	13.55	-1990	-22	1264.87		4649	3.0579	6175	2644			121.79	Si
SLU 47	11.45	-5011	-243	477.13		10815	3.3097	6998	3242			13.35	Si
SLU 47	13.55	-2291	-14	1307.61		5031	3.2521	6226	2835			205.53	Si
SLU 5	11.45	-3957	-270	366.95		8540	3.3097	6694	3102			11.48	Si
SLU 5	13.55	-1820	-37	1127.6		4185	3.1055	6114	2658			71.34	Si
SLU 23	11.45	-4140	-236	405.89		8934	3.3097	6747	3126			13.25	Si
SLU 23	13.55	-1850	4	1158.43		4282	3.0858	6126	2647			685.37	Si
SLU 2	11.45	-3748	-254	418.32		8089	3.3097	6634	3074			12.1	Si
SLU 2	13.55	-1679	-12	1021.17		3820	3.1403	6065	2666			228.15	Si
SLU 34	11.45	-4590	-223	297.37		9905	3.3097	6876	3186			14.3	Si
SLU 34	13.55	-2078	8	1398.71		5040	2.9456	6228	2568			320.13	Si
SLU 44	11.45	-4803	-227	528.5		10365	3.3097	6938	3215			14.18	Si
SLU 44	13.55	-2150	12	1201.18		4670	3.2889	6178	2845			241.57	Si
SLU 13	11.45	-4198	-241	309.79		9060	3.3097	6764	3134			13.01	Si
SLU 13	13.55	-1908	-8	1261.44		4571	2.981	6165	2573			341.86	Si
SLU 10	11.45	-3990	-225	361.15		8610	3.3097	6704	3106			13.82	Si
SLU 10	13.55	-1768	18	1155.01		4202	3.0042	6116	2572			142.57	Si
SLU 68	11.45	-5403	-225	464.71		11660	3.3097	7110	3295			14.66	Si
SLU 68	13.55	-2461	2	1444.88		5488	3.2035	6287	2820			1000	Si

Verifica a taglio nel piano secondo D.M. 17-01-18 (N.T.C.) §7.8.2.2.2 con rottura per scorrimento in combinazioni sismiche, γM = 2

Comb.	Quota	N	V par	M	σ0	σN	I'	fvd	Vt scorr.	Vt fess.diag.	Vt,lim	c.s.	Verifica
SLV 10	11.45	-367	-6414	-5015.12		0	0	8333	0			0	No, Vu<V
SLV 10	13.55	-645	-5580	5111.38		0	0	8333	0			0	No, Vu<V
SLV 6	11.45	-108	-7036	-5715.16		0	0	8333	0			0	No, Vu<V
SLV 6	13.55	-93	-5597	4793.44		0	0	8333	0			0	No, Vu<V
SLV 8	11.45	-7918	6665	5681.49		20113	2.812	12356	4864			0.73	No, Vu<V
SLV 8	13.55	-3033	5798	-3442.62		13892	1.5596	11112	2426			0.42	No, Vu<V
SLV 1	11.45	-2539	-2966	-2543.04		9254	1.9597	10184	2794			0.94	No, Vu<V
SLV 1	13.55	-478	-1629	1539.9		0	0	8333	0			0	No, Vu<V
SLV 5	11.45	-108	-7036	-5715.16		0	0	8333	0			0	No, Vu<V
SLV 5	13.55	-93	-5597	4793.44		0	0	8333	0			0	No, Vu<V
SLV 11	11.45	-8177	7287	6381.53		22264	2.6234	12786	4696			0.64	No, Vu<V
SLV 11	13.55	-3585	5815	-3124.69		10897	2.3499	10513	3459			0.59	No, Vu<V
SLV 7	11.45	-7918	6665	5681.49		20113	2.812	12356	4864			0.73	No, Vu<V
SLV 7	13.55	-3033	5798	-3442.62		13892	1.5596	11112	2426			0.42	No, Vu<V
SLV 9	11.45	-367	-6414	-5015.12		0	0	8333	0			0	No, Vu<V
SLV 9	13.55	-645	-5580	5111.38		0	0	8333	0			0	No, Vu<V
SLV 2	11.45	-2539	-2966	-2543.04		9254	1.9597	10184	2794			0.94	No, Vu<V
SLV 2	13.55	-478	-1629	1539.9		0	0	8333	0			0	No, Vu<V
SLV 12	11.45	-8177	7287	6381.53		22264	2.6234	12786	4696			0.64	No, Vu<V
SLV 12	13.55	-3585	5815	-3124.69		10897	2.3499	10513	3459			0.59	No, Vu<V

Verifica a pressoflessione fuori piano D.M. 17-01-18 (N.T.C.)

quota 13.025 Wa 0.03 denominatore 8 γM = 2

Comb.	fd	Sa	σ0	N	M	Mc	Coeff.s.	Verifica
SLV 6	143750	0.52	0	-12	197.63	0	0	No, e>t/2
SLV 9	143750	0.52	0	-917	197.63	0	0	No, e>t/2
SLV 2	143750	0.52	0	-306	197.63	0	0	No, e>t/2
SLV 10	143750	0.52	0	-917	197.63	0	0	No, e>t/2
SLV 5	143750	0.52	0	-12	197.63	0	0	No, e>t/2
SLV 4	143750	0.52	0	-1463	197.63	0	0	No, e>t/2
SLV 1	143750	0.52	0	-306	197.63	0	0	No, e>t/2
SLV 3	143750	0.52	0	-1463	197.63	0	0	No, e>t/2
SLV 13	143750	0.52	7171	-3323	197.63	218.95	1.11	Si

Comb.	fd	Sa	σ0	N	M	Mc	Coeff.s.	Verifica
SLV 14	143750	0.52	7171	-3323	197.63	218.95	1.11	Si

Verifica dei meccanismi locali di collasso con analisi cinematica lineare

forza di aggancio al piano = 0 quota mezzeria = 13.025 Wa = 0.03 Ta = 0.1184

Comb.	N top	N base	V orto	α0	M*	e*	a0*	aLim	Verifica
SLV 2	541	-2539	0	0	0	0	0	21.1064	No, Trazione
SLV 10	1191	-367	38	0	0	0	0	20.8876	No, Trazione
SLV 5	1293	-108	31	0	0	0	0	20.8876	No, Trazione
SLV 14	202	-3403	21	0	0	0	0	21.1064	No, Trazione
SLV 13	202	-3403	21	0	0	0	0	21.1064	No, Trazione
SLV 9	1191	-367	38	0	0	0	0	20.8876	No, Trazione
SLV 1	541	-2539	0	0	0	0	0	21.1064	No, Trazione
SLV 6	1293	-108	31	0	0	0	0	20.8876	No, Trazione
SLV 8	-1194	-7918	-38	0.019	346.3	0.889	0.3062	20.8876	No
SLV 7	-1194	-7918	-38	0.019	346.3	0.889	0.3062	20.8876	No

Tabella dei coefficienti di sicurezza minimi

Stato limite	Coeff.s.	Comb.	Verifica
PF_SLU	2.324	SLU 34	Si
V_SLU	11.476	SLU 5	Si
PF_SLV	0	SLV 1	No
V_SLV	0	SLV 1	No
PFFP_SLV	0	SLV 1	No
R_SLV	0	SLV 14	No

Maschio 240

Verifiche condotte secondo D.M. 17-01-18 (N.T.C.)

Dati geometrici

X ini.	Y ini.	X fin.	Y fin.	Quota i.	Quota.s	l	Sp.	h netta	h ini.	h fin.	a	a.s.,sx	a.s.,dx
-18.448	0.855	-18.448	1.046	L6	L7	0.191	0.14	3.15	3.15	3.15			

Caratteristiche del materiale

(Circolare 7 21-01-19 C8.5.I) Muratura in mattoni pieni e malta di calce LC2_Corti

fb	fk	fvk0	fmedio	τ0	fv0	μ	ϕ	fv,lim	E	G	FC
600000			345000	9000	20000	0.58	0.77	32500	320000000	128000000	1.2

Verifica a pressoflessione nel piano secondo D.M. 17-01-18 NTC §7.8.2.2.1 in combinazioni non sismiche, γM = 3

Comb.	Quota	N	M	σ0	Mu	c.s.	Verifica
SLU 42	11.45	-883	-26.67	33046	50.11	1.879	Si
SLU 42	13.55	-113	21.56	0	0	0	No, e>l/2
SLU 40	11.45	-786	-24.5	29406	47.95	1.957	Si
SLU 40	13.55	-60	19.54	0	0	0	No, e>l/2
SLU 34	11.45	-883	-25.77	33053	50.12	1.945	Si
SLU 34	13.55	-137	20.64	0	0	0	No, e>l/2
SLU 37	11.45	-939	-26.13	35125	50.98	1.951	Si
SLU 37	13.55	-201	21.41	0	0	0	No, e>l/2
SLU 33	11.45	-905	-26.02	33860	50.48	1.94	Si
SLU 33	13.55	-151	21	0	0	0	No, e>l/2
SLU 41	11.45	-858	-25.58	32105	49.63	1.94	Si
SLU 41	13.55	-120	20.81	0	0	0	No, e>l/2
SLU 35	11.45	-977	-27.1	36559	51.42	1.897	Si
SLU 35	13.55	-211	22.27	0	0	0	No, e>l/2
SLU 39	11.45	-761	-23.42	28465	47.25	2.018	Si
SLU 39	13.55	-67	18.79	0	0	0	No, e>l/2
SLU 38	11.45	-964	-27.21	36066	51.28	1.885	Si
SLU 38	13.55	-194	22.16	0	0	0	No, e>l/2
SLU 36	11.45	-1002	-28.18	37500	51.64	1.832	Si
SLU 36	13.55	-204	23.02	0	0	0	No, e>l/2

Verifica a pressoflessione nel piano secondo D.M. 17-01-18 NTC §7.8.2.2.1 in combinazioni sismiche, γM = 2

Comb.	Quota	N	M	σ0	Mu	c.s.	Verifica
SLV 3	11.45	-717	-7.68	26843	53.45	6.962	Si
SLV 3	13.55	257	33.98	0	0	0	No, Trazione
SLV 11	11.45	196	97.7	0	0	0	No, Trazione
SLV 11	13.55	-83	63.81	0	0	0	No, e>l/2
SLV 6	11.45	-1532	-131.1	57299	77.64	0.592	No, M>Mu
SLV 6	13.55	-227	-37.86	0	0	0	No, e>l/2
SLV 8	11.45	26	83.78	0	0	0	No, Trazione
SLV 8	13.55	132	66.98	0	0	0	No, Trazione
SLV 5	11.45	-1532	-131.1	57299	77.64	0.592	No, M>Mu
SLV 5	13.55	-227	-37.86	0	0	0	No, e>l/2
SLV 2	11.45	-1185	-72.14	44327	72.07	0.999	No, M>Mu
SLV 2	13.55	149	2.53	0	0	0	No, Trazione
SLV 4	11.45	-717	-7.68	26843	53.45	6.962	Si
SLV 4	13.55	257	33.98	0	0	0	No, Trazione
SLV 1	11.45	-1185	-72.14	44327	72.07	0.999	No, M>Mu
SLV 1	13.55	149	2.53	0	0	0	No, Trazione
SLV 12	11.45	196	97.7	0	0	0	No, Trazione
SLV 12	13.55	-83	63.81	0	0	0	No, e>l/2
SLV 7	11.45	26	83.78	0	0	0	No, Trazione
SLV 7	13.55	132	66.98	0	0	0	No, Trazione

Verifica a taglio nel piano secondo D.M. 17-01-18 (N.T.C.) §7.8.2.2.2 con rottura per scorrimento in combinazioni non sismiche, γM = 3

Comb.	Quota	N	V par	M	σ0	σN	l'	fvd	Vt scorr.	Vt fess.diag.	Vt,lim	c.s.	Verifica
SLU 35	11.45	-977	-58	-27.1		36559	0.1909	10430	279			4.85	Si
SLU 35	13.55	-211	-55	22.27		0	0	5556	0			0	No, Vu<V
SLU 37	11.45	-939	-55	-26.13		35125	0.1909	10239	274			4.95	Si
SLU 37	13.55	-201	-53	21.41		0	0	5556	0			0	No, Vu<V
SLU 39	11.45	-761	-50	-23.42		28465	0.1909	9351	250			4.97	Si
SLU 39	13.55	-67	-48	18.79		0	0	5556	0			0	No, Vu<V
SLU 41	11.45	-858	-55	-25.58		32105	0.1909	9836	263			4.81	Si
SLU 41	13.55	-120	-52	20.81		0	0	5556	0			0	No, Vu<V
SLU 36	11.45	-1002	-60	-28.18		37500	0.1909	10556	282			4.69	Si
SLU 36	13.55	-204	-57	23.02		0	0	5556	0			0	No, Vu<V
SLU 38	11.45	-964	-58	-27.21		36066	0.1909	10364	277			4.79	Si
SLU 38	13.55	-194	-54	22.16		0	0	5556	0			0	No, Vu<V
SLU 40	11.45	-786	-53	-24.5		29406	0.1909	9476	253			4.78	Si
SLU 40	13.55	-60	-49	19.54		0	0	5556	0			0	No, Vu<V
SLU 42	11.45	-883	-57	-26.67		33046	0.1909	9962	266			4.65	Si
SLU 42	13.55	-113	-54	21.56		0	0	5556	0			0	No, Vu<V
SLU 33	11.45	-905	-56	-26.02		33860	0.1909	10070	269			4.82	Si
SLU 33	13.55	-151	-52	21		0	0	5556	0			0	No, Vu<V
SLU 34	11.45	-883	-55	-25.77		33053	0.1909	9963	266			4.81	Si
SLU 34	13.55	-137	-51	20.64		0	0	5556	0			0	No, Vu<V

Verifica a taglio nel piano secondo D.M. 17-01-18 (N.T.C.) §7.8.2.2.2 con rottura per scorrimento in combinazioni sismiche, γM = 2

Comb.	Quota	N	V par	M	σ0	σN	l'	fvd	Vt scorr.	Vt fess.diag.	Vt,lim	c.s.	Verifica
SLV 6	11.45	-1532	-456	-131.1		369900	0.0296	16250	67			0.15	No, Vu<V
SLV 6	13.55	-227	65	-37.86		0	0	8333	0			0	No, Vu<V
SLV 7	11.45	26	207	83.78		0	0	8333	0			0	No, Vu<V
SLV 7	13.55	132	-159	66.98		0	0	8333	0			0	No, Vu<V
SLV 3	11.45	-717	-233	-7.68		26843	0.1909	13702	366			1.57	Si
SLV 3	13.55	257	-113	33.98		0	0	8333	0			0	No, Vu<V
SLV 1	11.45	-1185	-432	-72.14		81595	0.1037	16250	236			0.55	No, Vu<V
SLV 1	13.55	149	-46	2.53		0	0	8333	0			0	No, Vu<V
SLV 12	11.45	196	385	97.7		0	0	8333	0			0	No, Vu<V
SLV 12	13.55	-83	-131	63.81		0	0	8333	0			0	No, Vu<V
SLV 11	11.45	196	385	97.7		0	0	8333	0			0	No, Vu<V
SLV 11	13.55	-83	-131	63.81		0	0	8333	0			0	No, Vu<V
SLV 4	11.45	-717	-233	-7.68		26843	0.1909	13702	366			1.57	Si
SLV 4	13.55	257	-113	33.98		0	0	8333	0			0	No, Vu<V
SLV 8	11.45	26	207	83.78		0	0	8333	0			0	No, Vu<V
SLV 8	13.55	132	-159	66.98		0	0	8333	0			0	No, Vu<V
SLV 5	11.45	-1532	-456	-131.1		369900	0.0296	16250	67			0.15	No, Vu<V
SLV 5	13.55	-227	65	-37.86		0	0	8333	0			0	No, Vu<V
SLV 2	11.45	-1185	-432	-72.14		81595	0.1037	16250	236			0.55	No, Vu<V
SLV 2	13.55	149	-46	2.53		0	0	8333	0			0	No, Vu<V

Verifica a pressoflessione fuori piano D.M. 17-01-18 (N.T.C.)

quota 13.025 Wa 0.03 denominatore 8 γM = 2

Comb.	fd	Sa	σ0	N	M	Mc	Coeff.s.	Verifica
SLV 10	143750	0.52	0	31	11.4	0	0	No, Trazione
SLV 9	143750	0.52	0	31	11.4	0	0	No, Trazione
SLV 3	143750	0.52	0	-147	11.4	0	0	No, e>t/2
SLV 5	143750	0.52	0	189	11.4	0	0	No, Trazione
SLV 1	143750	0.52	0	93	11.4	0	0	No, Trazione
SLV 6	143750	0.52	0	189	11.4	0	0	No, Trazione
SLV 4	143750	0.52	0	-147	11.4	0	0	No, e>t/2
SLV 2	143750	0.52	0	93	11.4	0	0	No, Trazione
SLV 13	143750	0.52	16169	-432	11.4	26.25	2.3	Si
SLV 14	143750	0.52	16169	-432	11.4	26.25	2.3	Si

Verifica dei meccanismi locali di collasso con analisi cinematica lineare

forza di aggancio al piano = 0 quota mezzeria = 13.025 Wa = 0.03 Ta = 0.1184

Comb.	N top	N base	V orto	α0	M*	e*	a0*	aLim	Verifica
SLV 3	147	-717	1	0	0	0	0	21.1064	No, Trazione
SLV 1	0	-1185	0	0	0	0	0	21.1064	No, Trazione
SLV 8	200	26	1	0	0	0	0	20.8876	No, Trazione
SLV 2	0	-1185	0	0	0	0	0	21.1064	No, Trazione
SLV 4	147	-717	1	0	0	0	0	21.1064	No, Trazione
SLV 12	100	196	1	0	0	0	0	20.8876	No, Trazione
SLV 7	200	26	1	0	0	0	0	20.8876	No, Trazione
SLV 11	100	196	1	0	0	0	0	20.8876	No, Trazione
SLV 9	-388	-1361	-1	0.023	51.4	0.936	0.35192	20.8876	No
SLV 10	-388	-1361	-1	0.023	51.4	0.936	0.35192	20.8876	No

Tabella dei coefficienti di sicurezza minimi

Stato limite	Coeff.s.	Comb.	Verifica
PF_SLU	0	SLU 10	No
V_SLU	0	SLU 10	No
PF_SLV	0	SLV 12	No
V_SLV	0	SLV 1	No
PFFP_SLV	0	SLV 10	No
R_SLV	0	SLV 12	No

Maschio 241

Verifiche condotte secondo D.M. 17-01-18 (N.T.C.)

Dati geometrici

X ini.	Y ini.	X fin.	Y fin.	Quota i.	Quota.s	l	Sp.	h netta	h ini.	h fin.	a	a.s.,sx	a.s.,dx
-13.753	-3.254	-15.3	-3.254	L6	L7	1.547	0.28	3.15	3.15	3.15			

Caratteristiche del materiale

(Circolare 7 21-01-19 C8.5.I) Muratura in mattoni pieni e malta di calce LC2_Corti

fb	fk	fvk0	fmedio	τ0	fv0	μ	ϕ	fv,lim	E	G	FC
600000			345000	9000	20000	0.58	0.77	32500	320000000	128000000	1.2

Verifica a pressoflessione nel piano secondo D.M. 17-01-18 NTC §7.8.2.2.1 in combinazioni non sismiche, γM = 3

Comb.	Quota	N	M	σ0	Mu	c.s.	Verifica
SLU 31	11.45	-2011	-924.14	4643	1466.64	1.587	Si
SLU 31	13.55	-2781	609.59	6420	1981.34	3.25	Si
SLU 82	11.45	-2631	-1141.82	6075	1883.36	1.649	Si
SLU 82	13.55	-3463	789.06	7995	2415.5	3.061	Si
SLU 81	11.45	-2583	-1191.69	5965	1851.84	1.554	Si
SLU 81	13.55	-3490	838.01	8058	2432.34	2.903	Si
SLU 18	11.45	-1940	-868.61	4479	1417.87	1.632	Si
SLU 18	13.55	-2556	616.14	5901	1833.78	2.976	Si
SLU 39	11.45	-1735	-1090.69	4005	1275.76	1.17	Si
SLU 39	13.55	-2856	726.97	6594	2030.28	2.793	Si
SLU 40	11.45	-1783	-1040.82	4115	1309.05	1.258	Si
SLU 40	13.55	-2829	678.03	6532	2012.68	2.968	Si
SLU 42	11.45	-2102	-1043.54	4854	1529.12	1.465	Si
SLU 42	13.55	-3226	694.15	7448	2267.05	3.266	Si
SLU 32	11.45	-2386	-1022.06	5509	1720.59	1.683	Si
SLU 32	13.55	-3471	751.06	8013	2420.24	3.222	Si
SLU 41	11.45	-2054	-1093.41	4743	1496.49	1.369	Si
SLU 41	13.55	-3253	743.09	7511	2284.18	3.074	Si
SLU 83	11.45	-2903	-1194.42	6703	2060.68	1.725	Si
SLU 83	13.55	-3887	854.13	8974	2675.21	3.132	Si

Verifica a pressoflessione nel piano secondo D.M. 17-01-18 NTC §7.8.2.2.1 in combinazioni sismiche, γM = 2

Comb.	Quota	N	M	σ0	Mu	c.s.	Verifica
SLV 2	11.45	-3842	1414.42	8870	2755.73	1.948	Si
SLV 2	13.55	501	-816.47	0	0	0	No, Trazione
SLV 10	11.45	-2175	-2385.52	0	0	0	No, e>l/2
SLV 10	13.55	-4659	2485.88	10758	3286.57	1.322	Si
SLV 3	11.45	-3731	1986.22	8614	2682.26	1.35	Si
SLV 3	13.55	1150	-1654.77	0	0	0	No, Trazione
SLV 4	11.45	-3731	1986.22	8614	2682.26	1.35	Si
SLV 4	13.55	1150	-1654.77	0	0	0	No, Trazione
SLV 8	11.45	-2635	966.39	6083	1936.35	2.004	Si
SLV 8	13.55	-464	-1381.23	0	0	0	No, e>l/2
SLV 1	11.45	-3842	1414.42	8870	2755.73	1.948	Si
SLV 1	13.55	501	-816.47	0	0	0	No, Trazione
SLV 7	11.45	-2635	966.39	6083	1936.35	2.004	Si
SLV 7	13.55	-464	-1381.23	0	0	0	No, e>l/2
SLV 14	11.45	-1079	-3405.34	0	0	0	No, e>l/2
SLV 14	13.55	-6273	2759.42	14483	4276.86	1.55	Si
SLV 13	11.45	-1079	-3405.34	0	0	0	No, e>l/2
SLV 13	13.55	-6273	2759.42	14483	4276.86	1.55	Si
SLV 9	11.45	-2175	-2385.52	0	0	0	No, e>l/2
SLV 9	13.55	-4659	2485.88	10758	3286.57	1.322	Si

Verifica a taglio nel piano secondo D.M. 17-01-18 (N.T.C.) §7.8.2.2.2 con rottura per scorrimento in combinazioni non sismiche, γM = 3

Comb.	Quota	N	V par	M	σ0	σN	l'	fvd	Vt scorr.	Vt fess.diag.	Vt,lim	c.s.	Verifica
SLU 81	11.45	-2583	-2138	-1191.69		9852	0.9365	6869	1801			0.84	No, Vu<V
SLU 81	13.55	-3490	-2136	838.01		8058	1.5469	6630	2872			1.34	Si
SLU 39	11.45	-1735	-1927	-1090.69		14271	0.4341	7458	907			0.47	No, Vu<V
SLU 39	13.55	-2856	-1925	726.97		6594	1.5469	6435	2787			1.45	Si
SLU 31	11.45	-2011	-1644	-924.14		7627	0.9416	6572	1733			1.05	Si
SLU 31	13.55	-2781	-1676	609.59		6420	1.5469	6412	2777			1.66	Si
SLU 83	11.45	-2903	-2175	-1194.42		9547	1.0861	6828	2077			0.95	No, Vu<V
SLU 83	13.55	-3887	-2173	854.13		8974	1.5469	6752	2925			1.35	Si
SLU 32	11.45	-2386	-1892	-1022.06		8231	1.0352	6653	1928			1.02	Si
SLU 32	13.55	-3471	-1891	751.06		8013	1.5469	6624	2869			1.52	Si
SLU 84	11.45	-2951	-2090	-1144.55		9111	1.1568	6770	2193			1.05	Si
SLU 84	13.55	-3860	-2107	805.18		8912	1.5469	6744	2921			1.39	Si
SLU 40	11.45	-1783	-1841	-1040.82		11195	0.5687	7048	1122			0.61	No, Vu<V
SLU 40	13.55	-2829	-1860	678.03		6532	1.5469	6426	2783			1.5	Si
SLU 82	11.45	-2631	-2052	-1141.82		9227	1.0185	6786	1935			0.94	No, Vu<V
SLU 82	13.55	-3463	-2070	789.06		7995	1.5469	6622	2868			1.39	Si
SLU 42	11.45	-2102	-1879	-1043.54		9033	0.8312	6760	1573			0.84	No, Vu<V
SLU 42	13.55	-3226	-1897	694.15		7448	1.5469	6549	2836			1.5	Si
SLU 41	11.45	-2054	-1965	-1093.41		10139	0.7237	6907	1400			0.71	No, Vu<V
SLU 41	13.55	-3253	-1962	743.09		7511	1.5469	6557	2840			1.45	Si

Verifica a taglio nel piano secondo D.M. 17-01-18 (N.T.C.) §7.8.2.2.2 con rottura per scorrimento in combinazioni sismiche, γM = 2

Comb.	Quota	N	V par	M	σ0	σN	l'	fvd	Vt scorr.	Vt fess.diag.	Vt,lim	c.s.	Verifica
SLV 1	11.45	-3842	2454	1414.42		11285	1.2158	10590	3605			1.47	Si
SLV 1	13.55	501	1130	-816.47		0	0	8333	0			0	No, Vu<V
SLV 13	11.45	-1079	-5943	-3405.34		0	0	8333	0			0	No, Vu<V
SLV 13	13.55	-6273	-4570	2759.42		22388	1.0007	12811	3590			0.79	No, Vu<V
SLV 9	11.45	-2175	-4041	-2385.52		0	0	8333	0			0	No, Vu<V
SLV 9	13.55	-4659	-3556	2485.88		23118	0.7198	12957	2611			0.73	No, Vu<V
SLV 14	11.45	-1079	-5943	-3405.34		0	0	8333	0			0	No, Vu<V
SLV 14	13.55	-6273	-4570	2759.42		22388	1.0007	12811	3590			0.79	No, Vu<V
SLV 2	11.45	-3842	2454	1414.42		11285	1.2158	10590	3605			1.47	Si
SLV 2	13.55	501	1130	-816.47		0	0	8333	0			0	No, Vu<V

Comb.	Quota	N	V par	M	σ0	σN	l'	fvd	Vt scorr.	Vt fess.diag.	Vt,lim	c.s.	Verifica
SLV 7	11.45	-2635	1441	966.39		7713	1.22	9876	3374			2.34	Si
SLV 7	13.55	-464	956	-1381.23		0	0	8333	0			0	No, Vu<V
SLV 4	11.45	-3731	3342	1986.22		18423	0.7233	12018	2434			0.73	No, Vu<V
SLV 4	13.55	1150	1971	-1654.77		0	0	8333	0			0	No, Vu<V
SLV 10	11.45	-2175	-4041	-2385.52		0	0	8333	0			0	No, Vu<V
SLV 10	13.55	-4659	-3556	2485.88		23118	0.7198	12957	2611			0.73	No, Vu<V
SLV 8	11.45	-2635	1441	966.39		7713	1.22	9876	3374			2.34	Si
SLV 8	13.55	-464	956	-1381.23		0	0	8333	0			0	No, Vu<V
SLV 3	11.45	-3731	3342	1986.22		18423	0.7233	12018	2434			0.73	No, Vu<V
SLV 3	13.55	1150	1971	-1654.77		0	0	8333	0			0	No, Vu<V

Verifica a pressoflessione fuori piano D.M. 17-01-18 (N.T.C.)

quota 13.025 Wa 0.05 denominatore 8 γM = 2

Comb.	fd	Sa	σ0	N	M	Mc	Coeff.s.	Verifica
SLV 7	143750	0.52	0	-909	172.69	0	0	No, e>t/2
SLV 8	143750	0.52	0	-909	172.69	0	0	No, e>t/2
SLV 4	143750	0.52	0	314	172.69	0	0	No, Trazione
SLV 2	143750	0.52	0	-281	172.69	0	0	No, e>t/2
SLV 1	143750	0.52	0	-281	172.69	0	0	No, e>t/2
SLV 3	143750	0.52	0	314	172.69	0	0	No, Trazione
SLV 12	143750	0.52	5895	-2553	172.69	340.19	1.97	Si
SLV 11	143750	0.52	5895	-2553	172.69	340.19	1.97	Si
SLV 6	143750	0.52	6679	-2893	172.69	382.87	2.22	Si
SLV 5	143750	0.52	6679	-2893	172.69	382.87	2.22	Si

Verifica dei meccanismi locali di collasso con analisi cinematica lineare

forza di aggancio al piano = 0 quota mezzeria = 13.025 Wa = 0.05 Ta = 0.0592

Comb.	N top	N base	V orto	α0	M*	e*	a0*	aLim	Verifica
SLV 2	614	-3842	-207	0	0	0	0	11.09238	No, Trazione
SLV 5	772	-3004	-204	0	0	0	0	10.02695	No, Trazione
SLV 9	285	-2175	-108	0	0	0	0	10.02695	No, Trazione
SLV 1	614	-3842	-207	0	0	0	0	11.09238	No, Trazione
SLV 10	285	-2175	-108	0	0	0	0	10.02695	No, Trazione
SLV 4	-8	-3731	-114	0	250.4	0.997	0	11.09238	No
SLV 6	772	-3004	-204	0	0	0	0	10.02695	No, Trazione
SLV 11	-1789	-1806	203	0	386.1	0.892	0	10.02695	No
SLV 3	-8	-3731	-114	0	250.4	0.997	0	11.09238	No
SLV 12	-1789	-1806	203	0	386.1	0.892	0	10.02695	No

Tabella dei coefficienti di sicurezza minimi

Stato limite	Coeff.s.	Comb.	Verifica
PF_SLU	1.17	SLU 39	Si
V_SLU	0.47	SLU 39	No
PF_SLV	0	SLV 4	No
V_SLV	0	SLV 1	No
PFFP_SLV	0	SLV 4	No
R_SLV	0	SLV 10	No

Maschio 242

Verifiche condotte secondo D.M. 17-01-18 (N.T.C.)

Dati geometrici

X ini.	Y ini.	X fin.	Y fin.	Quota i.	Quota.s	l	Sp.	h netta	h ini.	h fin.	a	a.s.,sx	a.s.,dx
-15.038	2.203	-15.038	6.536	L6	L7	4.332	0.14	3.15	3.15	3.15			

Caratteristiche del materiale

(Circolare 7 21-01-19 C8.5.I) Muratura in mattoni pieni e malta di calce LC2_Corti

fb	fk	fvk0	fmedio	τ0	fv0	μ	ϕ	fv,lim	E	G	FC
600000			345000	9000	20000	0.58	0.77	32500	320000000	128000000	1.2

Verifica a pressoflessione nel piano secondo D.M. 17-01-18 NTC §7.8.2.2.1 in combinazioni non sismiche, γM = 3

Comb.	Quota	N	M	σ0	Mu	c.s.	Verifica
SLU 1	11.45	-4704	557.17	7755	9219.28	16.547	Si
SLU 1	14.6	277	-588.46	0	0	0	No, Trazione
SLU 56	11.45	-6827	1416.55	11255	12744.67	8.997	Si
SLU 56	14.6	710	-1411.74	0	0	0	No, Trazione
SLU 54	11.45	-6699	1065.8	11045	12544.15	11.77	Si
SLU 54	14.6	486	-1039.91	0	0	0	No, Trazione
SLU 58	11.45	-6606	1415.84	10892	12396.97	8.756	Si
SLU 58	14.6	790	-1477.1	0	0	0	No, Trazione
SLU 55	11.45	-6478	1066.81	10680	12192.11	11.429	Si
SLU 55	14.6	566	-1106.71	0	0	0	No, Trazione
SLU 57	11.45	-6825	1419.14	11252	12741.9	8.979	Si
SLU 57	14.6	710	-1413.87	0	0	0	No, Trazione
SLU 53	11.45	-6701	1063.21	11048	12546.94	11.801	Si
SLU 53	14.6	485	-1037.78	0	0	0	No, Trazione
SLU 60	11.45	-6548	710.3	10796	12304.3	17.323	Si
SLU 60	14.6	338	-732.66	0	0	0	No, Trazione
SLU 59	11.45	-6604	1418.43	10889	12394.17	8.738	Si
SLU 59	14.6	791	-1479.24	0	0	0	No, Trazione
SLU 61	11.45	-6546	712.89	10793	12301.49	17.256	Si
SLU 61	14.6	339	-734.8	0	0	0	No, Trazione

Verifica a pressoflessione nel piano secondo D.M. 17-01-18 NTC §7.8.2.2.1 in combinazioni sismiche, γM = 2

Comb.	Quota	N	M	σ0	Mu	c.s.	Verifica
SLV 7	11.45	-2345	2541.04	3866	4918.8	1.936	Si
SLV 7	14.6	986	-2513.98	0	0	0	No, Trazione
SLV 2	11.45	-5591	-1841.96	9218	11198.1	6.079	Si
SLV 2	14.6	213	-532.71	0	0	0	No, Trazione
SLV 6	11.45	-7552	-2399.63	12452	14692.84	6.123	Si
SLV 6	14.6	-334	999.8	0	0	0	No, e>l/2
SLV 10	11.45	-7671	-1395.44	12647	14897.14	10.676	Si
SLV 10	14.6	-407	1259.25	0	0	0	No, e>l/2
SLV 1	11.45	-5591	-1841.96	9218	11198.1	6.079	Si
SLV 1	14.6	213	-532.71	0	0	0	No, Trazione
SLV 9	11.45	-7671	-1395.44	12647	14897.14	10.676	Si
SLV 9	14.6	-407	1259.25	0	0	0	No, e>l/2
SLV 4	11.45	-4029	-359.76	6643	8253.24	22.941	Si
SLV 4	14.6	609	-1586.84	0	0	0	No, Trazione
SLV 8	11.45	-2345	2541.04	3866	4918.8	1.936	Si
SLV 8	14.6	986	-2513.98	0	0	0	No, Trazione
SLV 5	11.45	-7552	-2399.63	12452	14692.84	6.123	Si
SLV 5	14.6	-334	999.8	0	0	0	No, e>l/2
SLV 3	11.45	-4029	-359.76	6643	8253.24	22.941	Si
SLV 3	14.6	609	-1586.84	0	0	0	No, Trazione

Verifica a taglio nel piano secondo D.M. 17-01-18 (N.T.C.) §7.8.2.2.2 con rottura per scorrimento in combinazioni non sismiche, γM = 3

Comb.	Quota	N	V par	M	σ0	σN	l'	fvd	Vt scorr.	Vt fess.diag.	Vt,lim	c.s.	Verifica
SLU 59	11.45	-6604	-15	1418.43		10889	4.3324	7007	4250			284.88	Si
SLU 59	14.6	791	602	-1479.24		0	0	5556	0			0	No, Vu<V
SLU 1	11.45	-4704	8	557.17		7755	4.3324	6590	3997			478.42	Si
SLU 1	14.6	277	248	-588.46		0	0	5556	0			0	No, Vu<V
SLU 56	11.45	-6827	-16	1416.55		11255	4.3324	7056	4280			270.63	Si
SLU 56	14.6	710	574	-1411.74		0	0	5556	0			0	No, Vu<V
SLU 53	11.45	-6701	1	1063.21		11048	4.3324	7029	4263			1000	Si
SLU 53	14.6	485	430	-1037.78		0	0	5556	0			0	No, Vu<V
SLU 55	11.45	-6478	4	1066.81		10680	4.3324	6980	4233			986.08	Si
SLU 55	14.6	566	460	-1106.71		0	0	5556	0			0	No, Vu<V
SLU 58	11.45	-6606	-18	1415.84		10892	4.3324	7008	4250			236.88	Si
SLU 58	14.6	790	599	-1477.1		0	0	5556	0			0	No, Vu<V
SLU 54	11.45	-6699	4	1065.8		11045	4.3324	7028	4263			967.48	Si
SLU 54	14.6	486	433	-1039.91		0	0	5556	0			0	No, Vu<V
SLU 61	11.45	-6546	23	712.89		10793	4.3324	6995	4242			187.66	Si
SLU 61	14.6	339	316	-734.8		0	0	5556	0			0	No, Vu<V
SLU 60	11.45	-6548	20	710.3		10796	4.3324	6995	4243			216.66	Si
SLU 60	14.6	338	313	-732.66		0	0	5556	0			0	No, Vu<V
SLU 57	11.45	-6825	-13	1419.14		11252	4.3324	7056	4280			334.6	Si
SLU 57	14.6	710	577	-1413.87		0	0	5556	0			0	No, Vu<V

Verifica a taglio nel piano secondo D.M. 17-01-18 (N.T.C.) §7.8.2.2.2 con rottura per scorrimento in combinazioni sismiche, γM = 2

Comb.	Quota	N	V par	M	σ0	σN	l'	fvd	Vt scorr.	Vt fess.diag.	Vt,lim	c.s.	Verifica
SLV 10	11.45	-7671	-6116	-1395.44		12647	4.3324	10863	6589			1.08	Si
SLV 10	14.6	-407	-2805	1259.25		0	0	8333	0			0	No, Vu<V
SLV 3	11.45	-4029	3356	-359.76		6643	4.3324	9662	5860			1.75	Si
SLV 3	14.6	609	1541	-1586.84		0	0	8333	0			0	No, Vu<V
SLV 2	11.45	-5591	-23	-1841.96		9218	4.3324	10177	6173			265.9	Si
SLV 2	14.6	213	-231	-532.71		0	0	8333	0			0	No, Vu<V
SLV 9	11.45	-7671	-6116	-1395.44		12647	4.3324	10863	6589			1.08	Si
SLV 9	14.6	-407	-2805	1259.25		0	0	8333	0			0	No, Vu<V
SLV 8	11.45	-2345	6140	2541.04		5157	3.2476	9365	4258			0.69	No, Vu<V
SLV 8	14.6	986	3336	-2513.98		0	0	8333	0			0	No, Vu<V
SLV 7	11.45	-2345	6140	2541.04		5157	3.2476	9365	4258			0.69	No, Vu<V
SLV 7	14.6	986	3336	-2513.98		0	0	8333	0			0	No, Vu<V
SLV 6	11.45	-7552	-5123	-2399.63		12452	4.3324	10824	6565			1.28	Si
SLV 6	14.6	-334	-2571	999.8		0	0	8333	0			0	No, Vu<V
SLV 4	11.45	-4029	3356	-359.76		6643	4.3324	9662	5860			1.75	Si
SLV 4	14.6	609	1541	-1586.84		0	0	8333	0			0	No, Vu<V
SLV 1	11.45	-5591	-23	-1841.96		9218	4.3324	10177	6173			265.9	Si
SLV 1	14.6	213	-231	-532.71		0	0	8333	0			0	No, Vu<V
SLV 5	11.45	-7552	-5123	-2399.63		12452	4.3324	10824	6565			1.28	Si
SLV 5	14.6	-334	-2571	999.8		0	0	8333	0			0	No, Vu<V

Verifica a pressoflessione fuori piano D.M. 17-01-18 (N.T.C.)

quota 13.025 Wa 0.03 denominatore 8 γM = 2

Comb.	fd	Sa	σ0	N	M	Mc	Coeff.s.	Verifica
SLV 14	143750	0.52	0	-3172	258.7	0	0	No, e>t/2
SLV 11	143750	0.52	0	-551	258.7	0	0	No, e>t/2
SLV 7	143750	0.52	0	-314	258.7	0	0	No, e>t/2
SLV 8	143750	0.52	0	-314	258.7	0	0	No, e>t/2
SLV 2	143750	0.52	0	-2382	258.7	0	0	No, e>t/2
SLV 13	143750	0.52	0	-3172	258.7	0	0	No, e>t/2
SLV 3	143750	0.52	0	-1300	258.7	0	0	No, e>t/2
SLV 4	143750	0.52	0	-1300	258.7	0	0	No, e>t/2
SLV 12	143750	0.52	0	-551	258.7	0	0	No, e>t/2
SLV 1	143750	0.52	0	-2382	258.7	0	0	No, e>t/2

Verifica dei meccanismi locali di collasso con analisi cinematica lineare

forza di aggancio al piano = 0 quota mezzeria = 13.025 Wa = 0.03 Ta = 0.1184

Comb.	N top	N base	V orto	α0	M*	e*	a0*	aLim	Verifica
SLV 3	609	-4029	13	0	0	0	0	21.1064	No, Trazione
SLV 15	367	-4425	-21	0	0	0	0	21.1064	No, Trazione
SLV 11	914	-2464	-18	0	0	0	0	20.8876	No, Trazione
SLV 7	986	-2345	-7	0	0	0	0	20.8876	No, Trazione

Comb.	N top	N base	V orto	α0	M*	e*	a0*	aLim	Verifica
SLV 1	213	-5591	21	0	0	0	0	21.1064	No, Trazione
SLV 12	914	-2464	-18	0	0	0	0	20.8876	No, Trazione
SLV 2	213	-5591	21	0	0	0	0	21.1064	No, Trazione
SLV 16	367	-4425	-21	0	0	0	0	21.1064	No, Trazione
SLV 8	986	-2345	-7	0	0	0	0	20.8876	No, Trazione
SLV 4	609	-4029	13	0	0	0	0	21.1064	No, Trazione

Tabella dei coefficienti di sicurezza minimi

Stato limite	Coeff.s.	Comb.	Verifica
PF_SLU	0	SLU 84	No
V_SLU	0	SLU 1	No
PF_SLV	0	SLV 16	No
V_SLV	0	SLV 1	No
PFFP_SLV	0	SLV 1	No
R_SLV	0	SLV 16	No

Maschio 243

Verifiche condotte secondo D.M. 17-01-18 (N.T.C.)

Dati geometrici

X ini.	Y ini.	X fin.	Y fin.	Quota i.	Quota.s	l	Sp.	h netta	h ini.	h fin.	a	a.s.,sx	a.s.,dx
-13.753	-3.509	-13.753	1.046	L6	L7	4.555	0.28	3.15	3.15	3.15			

Caratteristiche del materiale

(Circolare 7 21-01-19 C8.5.I) Muratura in mattoni pieni e malta di calce LC2_Corti

fb	fk	fvk0	fmedio	τ0	fv0	μ	ϕ	fv,lim	E	G	FC
600000			345000	9000	20000	0.58	0.77	32500	320000000	128000000	1.2

Verifica a pressoflessione nel piano secondo D.M. 17-01-18 NTC §7.8.2.2.1 in combinazioni non sismiche, γM = 3

Comb.	Quota	N	M	σ0	Mu	c.s.	Verifica
SLU 30	11.45	-16770	3830.17	13149	32028.89	8.362	Si
SLU 30	14.6	-2974	-2500.86	2332	6579.87	2.631	Si
SLU 15	11.45	-16525	3755.86	12957	31649.18	8.427	Si
SLU 15	14.6	-2927	-2481.79	2295	6478.81	2.611	Si
SLU 35	11.45	-18022	4066.19	14131	33925.22	8.343	Si
SLU 35	14.6	-3234	-2752.09	2535	7135.21	2.593	Si
SLU 14	11.45	-16603	3804.69	13018	31769.79	8.35	Si
SLU 14	14.6	-2945	-2485.18	2309	6516.54	2.622	Si
SLU 7	11.45	-15810	3817.32	12396	30528.09	7.997	Si
SLU 7	14.6	-2880	-2448.26	2258	6377.48	2.605	Si
SLU 6	11.45	-15888	3866.14	12457	30651.14	7.928	Si
SLU 6	14.6	-2898	-2451.65	2272	6415.25	2.617	Si
SLU 36	11.45	-17944	4017.36	14070	33809.45	8.416	Si
SLU 36	14.6	-3216	-2748.7	2522	7097.7	2.582	Si
SLU 38	11.45	-17485	3768.72	13709	33119.89	8.788	Si
SLU 38	14.6	-3021	-2534.39	2369	6681.01	2.636	Si
SLU 28	11.45	-17230	4078.82	13509	32732.84	8.025	Si
SLU 28	14.6	-3169	-2715.16	2485	6996.96	2.577	Si
SLU 27	11.45	-17307	4127.64	13570	32851.05	7.959	Si
SLU 27	14.6	-3186	-2718.55	2498	7034.51	2.588	Si

Verifica a pressoflessione nel piano secondo D.M. 17-01-18 NTC §7.8.2.2.1 in combinazioni sismiche, γM = 2

Comb.	Quota	N	M	σ0	Mu	c.s.	Verifica
SLV 15	11.45	-9325	-3792.76	7311	19965.92	5.264	Si
SLV 15	14.6	-765	-4026.43	0	0	0	No, e>l/2
SLV 14	11.45	-9762	-4639.53	7654	20839.4	4.492	Si
SLV 14	14.6	-1645	-3309.08	1290	3707.2	1.12	Si
SLV 7	11.45	-14565	6545.98	11420	30071.62	4.594	Si
SLV 7	14.6	-455	-1376.85	0	0	0	No, e>l/2
SLV 8	11.45	-14565	6545.98	11420	30071.62	4.594	Si
SLV 8	14.6	-455	-1376.85	0	0	0	No, e>l/2
SLV 12	11.45	-11911	2230.21	9339	25053.96	11.234	Si
SLV 12	14.6	-125	-2986	0	0	0	No, e>l/2
SLV 11	11.45	-11911	2230.21	9339	25053.96	11.234	Si
SLV 11	14.6	-125	-2986	0	0	0	No, e>l/2
SLV 16	11.45	-9325	-3792.76	7311	19965.92	5.264	Si
SLV 16	14.6	-765	-4026.43	0	0	0	No, e>l/2
SLV 2	11.45	-18608	9746.37	14590	37320.05	3.829	Si
SLV 2	14.6	-2747	2054.76	2154	6145.64	2.991	Si
SLV 1	11.45	-18608	9746.37	14590	37320.05	3.829	Si
SLV 1	14.6	-2747	2054.76	2154	6145.64	2.991	Si
SLV 13	11.45	-9762	-4639.53	7654	20839.4	4.492	Si
SLV 13	14.6	-1645	-3309.08	1290	3707.2	1.12	Si

Verifica a taglio nel piano secondo D.M. 17-01-18 (N.T.C.) §7.8.2.2.2 con rottura per scorrimento in combinazioni non sismiche, γM = 3

Comb.	Quota	N	V par	M	σ0	σN	l'	fvd	Vt scorr.	Vt fess.diag.	Vt,lim	c.s.	Verifica
SLU 69	11.45	-20828	-264	4913.88		16330	4.555	7733	9863			37.31	Si
SLU 69	14.6	-3585	827	-2897.04		2905	4.4085	5943	7336			8.87	Si
SLU 27	11.45	-17307	-208	4127.64		13570	4.555	7365	9393			45.19	Si
SLU 27	14.6	-3186	760	-2718.55		2663	4.273	5911	7072			9.31	Si
SLU 36	11.45	-17944	-146	4017.36		14070	4.555	7432	9478			64.88	Si
SLU 36	14.6	-3216	815	-2748.7		2691	4.2684	5914	7069			8.67	Si
SLU 28	11.45	-17230	-202	4078.82		13509	4.555	7357	9383			46.34	Si
SLU 28	14.6	-3169	763	-2715.16		2655	4.262	5910	7052			9.24	Si
SLU 80	11.45	-21005	-222	4554.96		16470	4.555	7751	9886			44.58	Si
SLU 80	14.6	-3420	822	-2712.88		2743	4.453	5921	7383			8.98	Si

Comb.	Quota	N	V par	M	σ0	σN	l'	fvd	Vt scorr.	Vt fess.diag.	Vt,lim	c.s.	Verifica
SLU 78	11.45	-21465	-203	4803.6		16830	4.555	7800	9948			49.11	Si
SLU 78	14.6	-3615	883	-2927.19		2932	4.4033	5946	7332			8.31	Si
SLU 70	11.45	-20750	-259	4865.06		16269	4.555	7725	9852			38.05	Si
SLU 70	14.6	-3568	831	-2893.65		2896	4.3994	5942	7319			8.81	Si
SLU 79	11.45	-21083	-227	4603.78		16530	4.555	7760	9897			43.57	Si
SLU 79	14.6	-3438	818	-2716.27		2752	4.4622	5922	7400			9.04	Si
SLU 35	11.45	-18022	-151	4066.19		14131	4.555	7440	9489			62.64	Si
SLU 35	14.6	-3234	812	-2752.09		2699	4.2792	5915	7088			8.73	Si
SLU 77	11.45	-21542	-208	4852.42		16891	4.555	7808	9958			47.88	Si
SLU 77	14.6	-3633	879	-2930.58		2940	4.4123	5948	7348			8.36	Si

Verifica a taglio nel piano secondo D.M. 17-01-18 (N.T.C.) §7.8.2.2.2 con rottura per scorrimento in combinazioni sismiche, γM = 2

Comb.	Quota	N	V par	M	σ0	σN	l'	fvd	Vt scorr.	Vt fess.diag.	Vt,lim	c.s.	Verifica
SLV 11	11.45	-11911	7737	2230.21		9339	4.555	10201	13011			1.68	Si
SLV 11	14.6	-125	3682	-2986		0	0	8333	0			0	No, Vu<V
SLV 6	11.45	-16022	-8001	3723.4		12562	4.555	10846	13833			1.73	Si
SLV 6	14.6	-3387	-2911	1014.32		2656	4.555	8865	11306			3.88	Si
SLV 8	11.45	-14565	7024	6545.98		11420	4.555	10617	13541			1.93	Si
SLV 8	14.6	-455	3639	-1376.85		0	0	8333	0			0	No, Vu<V
SLV 15	11.45	-9325	3310	-3792.76		7311	4.555	9796	12493			3.77	Si
SLV 15	14.6	-765	1441	-4026.43		0	0	8333	0			0	No, Vu<V
SLV 5	11.45	-16022	-8001	3723.4		12562	4.555	10846	13833			1.73	Si
SLV 5	14.6	-3387	-2911	1014.32		2656	4.555	8865	11306			3.88	Si
SLV 7	11.45	-14565	7024	6545.98		11420	4.555	10617	13541			1.93	Si
SLV 7	14.6	-455	3639	-1376.85		0	0	8333	0			0	No, Vu<V
SLV 10	11.45	-13368	-7288	-592.36		10481	4.555	10430	13302			1.83	Si
SLV 10	14.6	-3057	-2867	-594.83		2397	4.555	8813	11240			3.92	Si
SLV 9	11.45	-13368	-7288	-592.36		10481	4.555	10430	13302			1.83	Si
SLV 9	14.6	-3057	-2867	-594.83		2397	4.555	8813	11240			3.92	Si
SLV 12	11.45	-11911	7737	2230.21		9339	4.555	10201	13011			1.68	Si
SLV 12	14.6	-125	3682	-2986		0	0	8333	0			0	No, Vu<V
SLV 16	11.45	-9325	3310	-3792.76		7311	4.555	9796	12493			3.77	Si
SLV 16	14.6	-765	1441	-4026.43		0	0	8333	0			0	No, Vu<V

Verifica a pressoflessione fuori piano D.M. 17-01-18 (N.T.C.)

quota 13.025 Wa 0.05 denominatore 8 γM = 2

Comb.	fd	Sa	σ0	N	M	Mc	Coeff.s.	Verifica
SLV 15	143750	0.52	0	-3031	520.33	0	0	No, e>t/2
SLV 16	143750	0.52	0	-3031	520.33	0	0	No, e>t/2
SLV 14	143750	0.52	2931	-3738	520.33	510.74	0.98	No, M>Mu
SLV 13	143750	0.52	2931	-3738	520.33	510.74	0.98	No, M>Mu
SLV 11	143750	0.52	4383	-5590	520.33	754.52	1.45	Si
SLV 12	143750	0.52	4383	-5590	520.33	754.52	1.45	Si
SLV 10	143750	0.52	6230	-7946	520.33	1055.69	2.03	Si
SLV 9	143750	0.52	6230	-7946	520.33	1055.69	2.03	Si
SLV 8	143750	0.52	6657	-8490	520.33	1123.85	2.16	Si
SLV 7	143750	0.52	6657	-8490	520.33	1123.85	2.16	Si

Verifica dei meccanismi locali di collasso con analisi cinematica lineare

forza di aggancio al piano = 0 quota mezzeria = 13.025 Wa = 0.05 Ta = 0.0592

Comb.	N top	N base	V orto	α0	M*	e*	a0*	aLim	Verifica
SLV 12	-125	-11911	-126	0.054	738	0.984	0.79432	10.02695	No
SLV 11	-125	-11911	-126	0.054	738	0.984	0.79432	10.02695	No
SLV 6	-3387	-16022	128	0.049	962.3	0.889	0.8024	10.02695	No
SLV 5	-3387	-16022	128	0.049	962.3	0.889	0.8024	10.02695	No
SLV 9	-3057	-13368	110	0.052	933	0.89	0.85052	10.02695	No
SLV 10	-3057	-13368	110	0.052	933	0.89	0.85052	10.02695	No
SLV 1	-2747	-18608	67	0.059	906	0.891	0.96508	11.09238	No
SLV 2	-2747	-18608	67	0.059	906	0.891	0.96508	11.09238	No
SLV 7	-455	-14565	-107	0.058	746.5	0.953	0.87768	10.02695	No
SLV 8	-455	-14565	-107	0.058	746.5	0.953	0.87768	10.02695	No

Tabella dei coefficienti di sicurezza minimi

Stato limite	Coeff.s.	Comb.	Verifica
PF_SLU	2.577	SLU 28	Si
V_SLU	8.307	SLU 78	Si
PF_SLV	0	SLV 7	No
V_SLV	0	SLV 7	No
PFFP_SLV	0	SLV 15	No
R_SLV	0.079	SLV 11	No

Maschio 244

Verifiche condotte secondo D.M. 17-01-18 (N.T.C.)

Dati geometrici

X ini.	Y ini.	X fin.	Y fin.	Quota i.	Quota.s	l	Sp.	h netta	h ini.	h fin.	a	a.s.,sx	a.s.,dx
-19.443	1.046	-24.643	1.046	L6	L7	5.2	0.28	3.15	3.15	3.15			

Caratteristiche del materiale

(Circolare 7 21-01-19 C8.5.I) Muratura in mattoni pieni e malta di calce LC2_Corti

fb	fk	fvk0	fmedio	τ0	fv0	μ	ϕ	fv,lim	E	G	FC
600000			345000	9000	20000	0.58	0.77	32500	320000000	128000000	1.2

Verifica a pressoflessione nel piano secondo D.M. 17-01-18 NTC §7.8.2.2.1 in combinazioni non sismiche, γM = 3

Comb.	Quota	N	M	σ0	Mu	c.s.	Verifica
SLU 38	11.45	-15481	-7336.87	10633	34995.99	4.77	Si
SLU 38	13.55	-11933	-13306.38	8196	27902.64	2.097	Si
SLU 80	11.45	-19378	-8434.38	13310	42149.83	4.997	Si
SLU 80	13.55	-14216	-14950.44	9764	32530.91	2.176	Si
SLU 30	11.45	-16325	-7636.07	11213	36601.3	4.793	Si
SLU 30	13.55	-11973	-12769.21	8224	27986.41	2.192	Si
SLU 29	11.45	-16327	-7596.75	11214	36605.87	4.819	Si
SLU 29	13.55	-11968	-12891.34	8220	27975.29	2.17	Si
SLU 42	11.45	-13759	-5676.9	9450	31621.49	5.57	Si
SLU 42	13.55	-10571	-11252.24	7260	25033.7	2.225	Si
SLU 17	11.45	-15194	-6928.58	10436	34442.5	4.971	Si
SLU 17	13.55	-11155	-11979.92	7662	26274.5	2.193	Si
SLU 79	11.45	-19381	-8395.06	13311	42154.08	5.021	Si
SLU 79	13.55	-14211	-15072.57	9761	32520.32	2.158	Si
SLU 16	11.45	-15197	-6889.26	10438	34447.19	5	Si
SLU 16	13.55	-11150	-12102.04	7658	26263.18	2.17	Si
SLU 41	11.45	-13761	-5637.58	9452	31626.34	5.61	Si
SLU 41	13.55	-10565	-11374.36	7257	25022.25	2.2	Si
SLU 37	11.45	-15484	-7297.55	10635	35000.65	4.796	Si
SLU 37	13.55	-11927	-13428.51	8192	27891.51	2.077	Si

Verifica a pressoflessione nel piano secondo D.M. 17-01-18 NTC §7.8.2.2.1 in combinazioni sismiche, γM = 2

Comb.	Quota	N	M	σ0	Mu	c.s.	Verifica
SLV 7	11.45	-15953	-519.07	10957	37756	72.738	Si
SLV 7	13.55	-14099	-20957.94	9684	33751.04	1.61	Si
SLV 2	11.45	-13482	-881.83	9260	32394.55	36.736	Si
SLV 2	13.55	-9817	-12982.86	6742	24114.05	1.857	Si
SLV 12	11.45	-15314	-2922.07	10518	36387.26	12.453	Si
SLV 12	13.55	-12601	-15737.92	8655	30441.03	1.934	Si
SLV 10	11.45	-10366	-7793.25	7120	25379.97	3.257	Si
SLV 10	13.55	-3324	5900.7	2283	8481.15	1.437	Si
SLV 4	11.45	-14966	579.53	10279	35636.7	61.493	Si
SLV 4	13.55	-12600	-19474.45	8654	30438.01	1.563	Si
SLV 9	11.45	-10366	-7793.25	7120	25379.97	3.257	Si
SLV 9	13.55	-3324	5900.7	2283	8481.15	1.437	Si
SLV 3	11.45	-14966	579.53	10279	35636.7	61.493	Si
SLV 3	13.55	-12600	-19474.45	8654	30438.01	1.563	Si
SLV 11	11.45	-15314	-2922.07	10518	36387.26	12.453	Si
SLV 11	13.55	-12601	-15737.92	8655	30441.03	1.934	Si
SLV 8	11.45	-15953	-519.07	10957	37756	72.738	Si
SLV 8	13.55	-14099	-20957.94	9684	33751.04	1.61	Si
SLV 1	11.45	-13482	-881.83	9260	32394.55	36.736	Si
SLV 1	13.55	-9817	-12982.86	6742	24114.05	1.857	Si

Verifica a taglio nel piano secondo D.M. 17-01-18 (N.T.C.) §7.8.2.2.2 con rottura per scorrimento in combinazioni non sismiche, γM = 3

Comb.	Quota	N	V par	M	σ0	σN	l'	fvd	Vt scorr.	Vt fess.diag.	Vt,lim	c.s.	Verifica
SLU 77	11.45	-20612	4131	-8624.53		14157	5.1998	7443	10837			2.62	Si
SLU 77	13.55	-15653	4131	-15306.9		11488	4.866	7087	9656			2.34	Si
SLU 84	11.45	-17656	4064	-6774.42		12127	5.1998	7172	10443			2.57	Si
SLU 84	13.55	-12855	4077	-12896.3		9584	4.79	6833	9165			2.25	Si
SLU 41	11.45	-13761	3957	-5637.58		9452	5.1998	6816	9923			2.51	Si
SLU 41	13.55	-10565	3957	-11374.36		8257	4.5701	6656	8518			2.15	Si
SLU 35	11.45	-16715	3949	-7527.01		11480	5.1998	7086	10317			2.61	Si
SLU 35	13.55	-13369	3950	-13662.84		10086	4.7338	6900	9146			2.32	Si
SLU 37	11.45	-15484	3809	-7297.55		10635	5.1998	6974	10153			2.67	Si
SLU 37	13.55	-11927	3810	-13428.51		9633	4.4222	6840	8469			2.22	Si
SLU 80	11.45	-19378	3916	-8434.38		13310	5.1998	7330	10672			2.73	Si
SLU 80	13.55	-14216	3929	-14950.44		10931	4.6448	7013	9121			2.32	Si
SLU 42	11.45	-13759	3882	-5676.9		9450	5.1998	6816	9923			2.56	Si
SLU 42	13.55	-10571	3895	-11252.24		8196	4.6064	6648	8575			2.2	Si
SLU 38	11.45	-15481	3735	-7336.87		10633	5.1998	6973	10153			2.72	Si
SLU 38	13.55	-11933	3748	-13306.38		9567	4.4544	6831	8520			2.27	Si
SLU 79	11.45	-19381	3991	-8395.06		13311	5.1998	7330	10673			2.67	Si
SLU 79	13.55	-14211	3991	-15072.57		10991	4.6179	7021	9078			2.27	Si
SLU 83	11.45	-17658	4138	-6735.1		12128	5.1998	7173	10443			2.52	Si
SLU 83	13.55	-12849	4139	-13018.42		9640	4.7602	6841	9118			2.2	Si

Verifica a taglio nel piano secondo D.M. 17-01-18 (N.T.C.) §7.8.2.2.2 con rottura per scorrimento in combinazioni sismiche, γM = 2

Comb.	Quota	N	V par	M	σ0	σN	l'	fvd	Vt scorr.	Vt fess.diag.	Vt,lim	c.s.	Verifica
SLV 16	11.45	-12837	-4248	-7430.49		8817	5.1998	10097	14700			3.46	Si
SLV 16	13.55	-7607	-2054	-2074.38		5224	5.1998	9378	13654			6.65	Si
SLV 14	11.45	-11352	-5629	-8891.84		7797	5.1998	9893	14403			2.56	Si
SLV 14	13.55	-4824	-3399	4417.2		3410	5.0524	9015	12754			3.75	Si
SLV 1	11.45	-13482	8457	-881.83		9260	5.1998	10185	14829			1.75	Si
SLV 1	13.55	-9817	6264	-12982.86		9149	3.8321	10163	10905			1.74	Si
SLV 7	11.45	-15953	6518	-519.07		10957	5.1998	10525	15323			2.35	Si
SLV 7	13.55	-14099	5796	-20957.94		15075	3.3403	11348	10614			1.83	Si
SLV 2	11.45	-13482	8457	-881.83		9260	5.1998	10185	14829			1.75	Si
SLV 2	13.55	-9817	6264	-12982.86		9149	3.8321	10163	10905			1.74	Si
SLV 3	11.45	-14966	9837	579.53		10279	5.1998	10389	15126			1.54	Si
SLV 3	13.55	-12600	7609	-19474.45		14227	3.1629	11179	9900			1.3	Si
SLV 4	11.45	-14966	9837	579.53		10279	5.1998	10389	15126			1.54	Si
SLV 4	13.55	-12600	7609	-19474.45		14227	3.1629	11179	9900			1.3	Si
SLV 15	11.45	-12837	-4248	-7430.49		8817	5.1998	10097	14700			3.46	Si
SLV 15	13.55	-7607	-2054	-2074.38		5224	5.1998	9378	13654			6.65	Si
SLV 8	11.45	-15953	6518	-519.07		10957	5.1998	10525	15323			2.35	Si
SLV 8	13.55	-14099	5796	-20957.94		15075	3.3403	11348	10614			1.83	Si
SLV 13	11.45	-11352	-5629	-8891.84		7797	5.1998	9893	14403			2.56	Si
SLV 13	13.55	-4824	-3399	4417.2		3410	5.0524	9015	12754			3.75	Si

Verifica a pressoflessione fuori piano D.M. 17-01-18 (N.T.C.)

quota 13.025 Wa 0.05 denominatore 8 γM = 2

Comb.	fd	Sa	σ0	N	M	Mc	Coeff.s.	Verifica
SLV 9	143750	0.52	3249	-4730	593.99	644.64	1.09	Si
SLV 10	143750	0.52	3249	-4730	593.99	644.64	1.09	Si
SLV 6	143750	0.52	4159	-6056	593.99	818.92	1.38	Si
SLV 5	143750	0.52	4159	-6056	593.99	818.92	1.38	Si
SLV 14	143750	0.52	4211	-6132	593.99	828.84	1.4	Si
SLV 13	143750	0.52	4211	-6132	593.99	828.84	1.4	Si
SLV 15	143750	0.52	5947	-8658	593.99	1153.12	1.94	Si
SLV 16	143750	0.52	5947	-8658	593.99	1153.12	1.94	Si
SLV 2	143750	0.52	7245	-10549	593.99	1389.28	2.34	Si
SLV 1	143750	0.52	7245	-10549	593.99	1389.28	2.34	Si

Verifica dei meccanismi locali di collasso con analisi cinematica lineare

forza di aggancio al piano = 0 quota mezzeria = 13.025 Wa = 0.05 Ta = 0.0592

Comb.	N top	N base	V orto	α0	M*	e*	a0*	aLim	Verifica
SLV 8	-8177	-15953	-111	0.05	1507.1	0.9	0.81301	10.02695	No
SLV 7	-8177	-15953	-111	0.05	1507.1	0.9	0.81301	10.02695	No
SLV 12	-7569	-15314	-115	0.05	1447.8	0.898	0.81456	10.02695	No
SLV 11	-7569	-15314	-115	0.05	1447.8	0.898	0.81456	10.02695	No
SLV 3	-6936	-14966	-26	0.059	1386.4	0.895	0.95313	11.09238	No
SLV 4	-6936	-14966	-26	0.059	1386.4	0.895	0.95313	11.09238	No
SLV 1	-5264	-13482	44	0.059	1227	0.89	0.96821	11.09238	No
SLV 2	-5264	-13482	44	0.059	1227	0.89	0.96821	11.09238	No
SLV 6	-2605	-11005	120	0.054	989.6	0.894	0.87532	10.02695	No
SLV 5	-2605	-11005	120	0.054	989.6	0.894	0.87532	10.02695	No

Tabella dei coefficienti di sicurezza minimi

Stato limite	Coeff.s.	Comb.	Verifica
PF_SLU	2.077	SLU 37	Si
V_SLU	2.152	SLU 41	Si
PF_SLV	1.437	SLV 9	Si
V_SLV	1.301	SLV 3	Si
PFFP_SLV	1.085	SLV 9	Si
R_SLV	0.081	SLV 7	No

Maschio 245

Verifiche condotte secondo D.M. 17-01-18 (N.T.C.)

Dati geometrici

X ini.	Y ini.	X fin.	Y fin.	Quota i.	Quota.s	l	Sp.	h netta	h ini.	h fin.	a	a.s.,sx	a.s.,dx
-14.853	1.046	-18.643	1.046	L6	L7	3.79	0.28	3.15	3.15	3.15			

Caratteristiche del materiale

(Circolare 7 21-01-19 C8.5.I) Muratura in mattoni pieni e malta di calce LC2_Corti

fb	fk	fvk0	fmedio	τ0	fv0	μ	ϕ	fv,lim	E	G	FC
600000			345000	9000	20000	0.58	0.77	32500	320000000	128000000	1.2

Verifica a pressoflessione nel piano secondo D.M. 17-01-18 NTC §7.8.2.2.1 in combinazioni non sismiche, γM = 3

Comb.	Quota	N	M	σ0	Mu	c.s.	Verifica
SLU 81	11.45	-20608	-3096.57	19418	29745.49	9.606	Si
SLU 81	13.55	-15933	1366.85	15013	24630.08	18.02	Si
SLU 39	11.45	-15916	-2750	14997	24609.59	8.949	Si
SLU 39	13.55	-12332	1332.07	11620	20037.71	15.043	Si
SLU 41	11.45	-18257	-2891.18	17202	27292.44	9.44	Si
SLU 41	13.55	-14718	2117.77	13868	23143.75	10.928	Si
SLU 38	11.45	-21027	-2661.9	19813	30156.92	11.329	Si
SLU 38	13.55	-17519	2863.92	16507	26473.1	9.244	Si
SLU 40	11.45	-16000	-2531.36	15076	24709.96	9.762	Si
SLU 40	13.55	-12448	1368.29	11729	20193.83	14.758	Si
SLU 83	11.45	-22949	-3237.75	21624	31946.72	9.867	Si
SLU 83	13.55	-18318	2152.55	17260	27359.6	12.71	Si
SLU 35	11.45	-21929	-2941.72	20663	31017.2	10.544	Si
SLU 35	13.55	-18418	2772.5	17355	27468.96	9.908	Si
SLU 36	11.45	-22013	-2723.08	20742	31095.44	11.419	Si
SLU 36	13.55	-18534	2808.72	17464	27594.27	9.824	Si
SLU 30	11.45	-21833	-2307.64	20572	30927	13.402	Si
SLU 30	13.55	-18220	2687.15	17168	27252.87	10.142	Si
SLU 37	11.45	-20943	-2880.54	19734	30075.05	10.441	Si
SLU 37	13.55	-17404	2827.7	16399	26342.65	9.316	Si

Verifica a pressoflessione nel piano secondo D.M. 17-01-18 NTC §7.8.2.2.1 in combinazioni sismiche, γM = 2

Comb.	Quota	N	M	σ0	Mu	c.s.	Verifica
SLV 1	11.45	-18494	1657.76	17426	30050.72	18.127	Si
SLV 1	13.55	-15253	-13072.71	14372	25506.48	1.951	Si
SLV 4	11.45	-17211	4502.19	16217	28288.02	6.283	Si
SLV 4	13.55	-13740	-16599.14	12947	23280.57	1.403	Si
SLV 13	11.45	-15512	-8466.67	14617	25881.6	3.057	Si
SLV 13	13.55	-11639	18216.83	10967	20078.02	1.102	Si
SLV 14	11.45	-15512	-8466.67	14617	25881.6	3.057	Si
SLV 14	13.55	-11639	18216.83	10967	20078.02	1.102	Si
SLV 7	11.45	-14670	4277.14	13823	24656.22	5.765	Si
SLV 7	13.55	-10710	-9761.97	10092	18621.41	1.908	Si
SLV 2	11.45	-18494	1657.76	17426	30050.72	18.127	Si
SLV 2	13.55	-15253	-13072.71	14372	25506.48	1.951	Si

Comb.	Quota	N	M	σ0	Mu	c.s.	Verifica
SLV 3	11.45	-17211	4502.19	16217	28288.02	6.283	Si
SLV 3	13.55	-13740	-16599.14	12947	23280.57	1.403	Si
SLV 8	11.45	-14670	4277.14	13823	24656.22	5.765	Si
SLV 8	13.55	-10710	-9761.97	10092	18621.41	1.908	Si
SLV 16	11.45	-14229	-5622.24	13407	24007.03	4.27	Si
SLV 16	13.55	-10126	14690.4	9542	17692.32	1.204	Si
SLV 15	11.45	-14229	-5622.24	13407	24007.03	4.27	Si
SLV 15	13.55	-10126	14690.4	9542	17692.32	1.204	Si

Verifica a taglio nel piano secondo D.M. 17-01-18 (N.T.C.) §7.8.2.2.2 con rottura per scorrimento in combinazioni non sismiche, γM = 3

Comb.	Quota	N	V par	M	σ0	σN	l'	fvd	Vt scorr.	Vt fess.diag.	Vt,lim	c.s.	Verifica
SLU 36	11.45	-22013	-2083	-2723.08		20742	3.7903	8321	8831			4.24	Si
SLU 36	13.55	-18534	-2083	2808.72		17464	3.7903	7884	8367			4.02	Si
SLU 80	11.45	-25719	-2224	-3008.47		24234	3.7903	8787	9325			4.19	Si
SLU 80	13.55	-21119	-2224	2898.7		19900	3.7903	8209	8712			3.92	Si
SLU 78	11.45	-26706	-2204	-3069.65		25163	3.7903	8911	9457			4.29	Si
SLU 78	13.55	-22134	-2204	2843.5		20856	3.7903	8336	8847			4.02	Si
SLU 77	11.45	-26622	-2316	-3288.29		25084	3.7903	8900	9446			4.08	Si
SLU 77	13.55	-22019	-2316	2807.28		20747	3.7903	8322	8832			3.81	Si
SLU 29	11.45	-21749	-2047	-2526.28		20493	3.7903	8288	8796			4.3	Si
SLU 29	13.55	-18105	-2047	2650.93		17059	3.7903	7830	8310			4.06	Si
SLU 38	11.45	-21027	-2103	-2661.9		19813	3.7903	8197	8700			4.14	Si
SLU 38	13.55	-17519	-2103	2863.92		16507	3.7903	7757	8232			3.91	Si
SLU 79	11.45	-25635	-2336	-3227.11		24155	3.7903	8776	9314			3.99	Si
SLU 79	13.55	-21004	-2336	2862.49		19791	3.7903	8194	8697			3.72	Si
SLU 37	11.45	-20943	-2216	-2880.54		19734	3.7903	8187	8688			3.92	Si
SLU 37	13.55	-17404	-2215	2827.7		16399	3.7903	7742	8217			3.71	Si
SLU 71	11.45	-26441	-2168	-2872.85		24914	3.7903	8877	9422			4.35	Si
SLU 71	13.55	-21705	-2168	2685.71		20452	3.7903	8282	8790			4.05	Si
SLU 35	11.45	-21929	-2195	-2941.72		20663	3.7903	8311	8820			4.02	Si
SLU 35	13.55	-18418	-2195	2772.5		17355	3.7903	7870	8352			3.8	Si

Verifica a taglio nel piano secondo D.M. 17-01-18 (N.T.C.) §7.8.2.2.2 con rottura per scorrimento in combinazioni sismiche, γM = 2

Comb.	Quota	N	V par	M	σ0	σN	l'	fvd	Vt scorr.	Vt fess.diag.	Vt,lim	c.s.	Verifica
SLV 9	11.45	-18053	-8641	-8241.61		17011	3.7903	11736	12455			1.44	Si
SLV 9	13.55	-14669	-8408	11379.65		15600	3.3581	11453	10769			1.28	Si
SLV 7	11.45	-14670	6629	4277.14		13823	3.7903	11098	11778			1.78	Si
SLV 7	13.55	-10710	6396	-9761.97		12962	2.9511	10926	9028			1.41	Si
SLV 13	11.45	-15512	-13152	-8466.67		14617	3.7903	11257	11947			0.91	No, Vu<V
SLV 13	13.55	-11639	-11732	18216.83		41987	0.99	16250	4505			0.38	No, Vu<V
SLV 16	11.45	-14229	-10520	-5622.24		13407	3.7903	11015	11690			1.11	Si
SLV 16	13.55	-10126	-8973	14690.4		27124	1.3333	13758	5136			0.57	No, Vu<V
SLV 10	11.45	-18053	-8641	-8241.61		17011	3.7903	11736	12455			1.44	Si
SLV 10	13.55	-14669	-8408	11379.65		15600	3.3581	11453	10769			1.28	Si
SLV 14	11.45	-15512	-13152	-8466.67		14617	3.7903	11257	11947			0.91	No, Vu<V
SLV 14	13.55	-11639	-11732	18216.83		41987	0.99	16250	4505			0.38	No, Vu<V
SLV 8	11.45	-14670	6629	4277.14		13823	3.7903	11098	11778			1.78	Si
SLV 8	13.55	-10710	6396	-9761.97		12962	2.9511	10926	9028			1.41	Si
SLV 15	11.45	-14229	-10520	-5622.24		13407	3.7903	11015	11690			1.11	Si
SLV 15	13.55	-10126	-8973	14690.4		27124	1.3333	13758	5136			0.57	No, Vu<V
SLV 4	11.45	-17211	11139	4502.19		16217	3.7903	11577	12286			1.1	Si
SLV 4	13.55	-13740	9719	-16599.14		23807	2.0612	13095	7558			0.78	No, Vu<V
SLV 3	11.45	-17211	11139	4502.19		16217	3.7903	11577	12286			1.1	Si
SLV 3	13.55	-13740	9719	-16599.14		23807	2.0612	13095	7558			0.78	No, Vu<V

Verifica a pressoflessione fuori piano D.M. 17-01-18 (N.T.C.)

quota 13.025 Wa 0.05 denominatore 8 γM = 2

Comb.	fd	Sa	σ0	N	M	Mc	Coeff.s.	Verifica
SLV 11	143750	0.52	9465	-10045	432.98	1297.36	3	Si
SLV 12	143750	0.52	9465	-10045	432.98	1297.36	3	Si
SLV 16	143750	0.52	10157	-10780	432.98	1383.73	3.2	Si
SLV 15	143750	0.52	10157	-10780	432.98	1383.73	3.2	Si
SLV 8	143750	0.52	10469	-11110	432.98	1422.19	3.28	Si
SLV 7	143750	0.52	10469	-11110	432.98	1422.19	3.28	Si
SLV 14	143750	0.52	11755	-12475	432.98	1578.54	3.65	Si
SLV 13	143750	0.52	11755	-12475	432.98	1578.54	3.65	Si
SLV 4	143750	0.52	13504	-14332	432.98	1784.69	4.12	Si
SLV 3	143750	0.52	13504	-14332	432.98	1784.69	4.12	Si

Verifica dei meccanismi locali di collasso con analisi cinematica lineare

forza di aggancio al piano = 0 quota mezzeria = 13.025 Wa = 0.05 Ta = 0.0592

Comb.	N top	N base	V orto	α0	M*	e*	a0*	aLim	Verifica
SLV 11	-6475	-13775	360	0.021	1149	0.902	0.33079	10.02695	No
SLV 12	-6475	-13775	360	0.021	1149	0.902	0.33079	10.02695	No
SLV 8	-7017	-14670	327	0.025	1202.4	0.905	0.40341	10.02695	No
SLV 7	-7017	-14670	327	0.025	1202.4	0.905	0.40341	10.02695	No
SLV 6	-11520	-18948	-360	0.029	1652.1	0.924	0.45429	10.02695	No
SLV 5	-11520	-18948	-360	0.029	1652.1	0.924	0.45429	10.02695	No
SLV 10	-10979	-18053	-327	0.031	1597.7	0.922	0.48295	10.02695	No
SLV 9	-10979	-18053	-327	0.031	1597.7	0.922	0.48295	10.02695	No
SLV 1	-10576	-18494	-158	0.043	1557.2	0.921	0.67371	11.09238	No
SLV 2	-10576	-18494	-158	0.043	1557.2	0.921	0.67371	11.09238	No

Tabella dei coefficienti di sicurezza minimi

Stato limite	Coeff.s.	Comb.	Verifica
PF_SLU	8.949	SLU 39	Si
V_SLU	3.709	SLU 37	Si
PF_SLV	1.102	SLV 13	Si
V_SLV	0.384	SLV 13	No

Stato limite	Coeff.s.	Comb.	Verifica
PFFP_SLV	2.996	SLV 11	Si
R_SLV	0.033	SLV 11	No

Maschio 246

Verifiche condotte secondo D.M. 17-01-18 (N.T.C.)

Dati geometrici

X ini.	Y ini.	X fin.	Y fin.	Quota i.	Quota.s	l	Sp.	h netta	h ini.	h fin.	a	a.s.,sx	a.s.,dx
-13.543	1.046	-14.053	1.046	L6	L7	0.51	0.28	3.15	3.15	3.15			

Caratteristiche del materiale

(Circolare 7 21-01-19 C8.5.I) Muratura in mattoni pieni e malta di calce LC2_Corti

fb	fk	fvk0	fmedio	τ0	fv0	μ	ϕ	fv,lim	E	G	FC
600000			345000	9000	20000	0.58	0.77	32500	320000000	128000000	1.2

Verifica a pressoflessione nel piano secondo D.M. 17-01-18 NTC §7.8.2.2.1 in combinazioni non sismiche, γM = 3

Comb.	Quota	N	M	σ0	Mu	c.s.	Verifica
SLU 39	11.45	-2422	-98.91	16966	488.77	4.942	Si
SLU 39	13.55	-3415	78.55	23921	614.81	7.827	Si
SLU 40	11.45	-2412	-94.96	16896	487.27	5.131	Si
SLU 40	13.55	-3384	75.1	23704	611.54	8.143	Si
SLU 42	11.45	-2669	-105.99	18700	524.23	4.946	Si
SLU 42	13.55	-3816	84.03	26730	653.47	7.777	Si
SLU 83	11.45	-3380	-113.43	23680	611.16	5.388	Si
SLU 83	13.55	-4611	90.34	32301	709.28	7.851	Si
SLU 41	11.45	-2679	-109.93	18770	525.61	4.781	Si
SLU 41	13.55	-3847	87.48	26947	656.16	7.5	Si
SLU 37	11.45	-2977	-111.94	20853	564.54	5.043	Si
SLU 37	13.55	-4241	89.48	29711	686.78	7.675	Si
SLU 35	11.45	-3111	-112.82	21791	580.79	5.148	Si
SLU 35	13.55	-4442	90.14	31116	699.73	7.762	Si
SLU 32	11.45	-2853	-101.8	19987	548.81	5.391	Si
SLU 32	13.55	-4010	81.21	28090	669.65	8.245	Si
SLU 38	11.45	-2967	-107.99	20783	563.29	5.216	Si
SLU 38	13.55	-4210	86.03	29494	684.63	7.958	Si
SLU 36	11.45	-3101	-108.88	21720	579.6	5.323	Si
SLU 36	13.55	-4411	86.69	30899	697.85	8.05	Si

Verifica a pressoflessione nel piano secondo D.M. 17-01-18 NTC §7.8.2.2.1 in combinazioni sismiche, γM = 2

Comb.	Quota	N	M	σ0	Mu	c.s.	Verifica
SLV 13	11.45	-100	-999.93	0	0	0	No, e>l/2
SLV 13	13.55	-332	856.84	0	0	0	No, e>l/2
SLV 16	11.45	-179	-890	0	0	0	No, e>l/2
SLV 16	13.55	653	786.33	0	0	0	No, Trazione
SLV 3	11.45	-4811	888.32	33699	888.03	1	No, M>Mu
SLV 3	13.55	-5803	-767.31	40652	987.07	1.286	Si
SLV 11	11.45	-1892	-139.33	13256	430.03	3.086	Si
SLV 11	13.55	-457	160.29	0	0	0	No, e>l/2
SLV 12	11.45	-1892	-139.33	13256	430.03	3.086	Si
SLV 12	13.55	-457	160.29	0	0	0	No, e>l/2
SLV 4	11.45	-4811	888.32	33699	888.03	1	No, M>Mu
SLV 4	13.55	-5803	-767.31	40652	987.07	1.286	Si
SLV 10	11.45	-1629	-505.77	0	0	0	No, e>l/2
SLV 10	13.55	-3741	395.33	26206	749.06	1.895	Si
SLV 14	11.45	-100	-999.93	0	0	0	No, e>l/2
SLV 14	13.55	-332	856.84	0	0	0	No, e>l/2
SLV 9	11.45	-1629	-505.77	0	0	0	No, e>l/2
SLV 9	13.55	-3741	395.33	26206	749.06	1.895	Si
SLV 15	11.45	-179	-890	0	0	0	No, e>l/2
SLV 15	13.55	653	786.33	0	0	0	No, Trazione

Verifica a taglio nel piano secondo D.M. 17-01-18 (N.T.C.) §7.8.2.2.2 con rottura per scorrimento in combinazioni non sismiche, γM = 3

Comb.	Quota	N	V par	M	σ0	σN	l'	fvd	Vt scorr.	Vt fess.diag.	Vt,lim	c.s.	Verifica
SLU 77	11.45	-3811	-152	-116.33		26700	0.5098	9116	1301			8.54	Si
SLU 77	13.55	-5206	-140	93		36470	0.5098	10418	1487			10.61	Si
SLU 36	11.45	-3101	-140	-108.88		21720	0.5098	8452	1206			8.64	Si
SLU 36	13.55	-4411	-129	86.69		30899	0.5098	9675	1381			10.72	Si
SLU 35	11.45	-3111	-144	-112.82		21791	0.5098	8461	1208			8.38	Si
SLU 35	13.55	-4442	-133	90.14		31116	0.5098	9704	1385			10.45	Si
SLU 83	11.45	-3380	-148	-113.43		23680	0.5098	8713	1244			8.42	Si
SLU 83	13.55	-4611	-133	90.34		32301	0.5098	9862	1408			10.6	Si
SLU 79	11.45	-3678	-150	-115.44		25763	0.5098	8991	1283			8.54	Si
SLU 79	13.55	-5005	-138	92.34		35065	0.5098	10231	1460			10.58	Si
SLU 42	11.45	-2669	-135	-105.99		18700	0.5098	8049	1149			8.52	Si
SLU 42	13.55	-3816	-121	84.03		26730	0.5098	9120	1302			10.72	Si
SLU 38	11.45	-2967	-137	-107.99		20783	0.5098	8327	1189			8.65	Si
SLU 38	13.55	-4210	-127	86.03		29494	0.5098	9488	1354			10.69	Si
SLU 84	11.45	-3370	-143	-109.49		23609	0.5098	8703	1242			8.68	Si
SLU 84	13.55	-4580	-129	86.88		32084	0.5098	9833	1404			10.88	Si
SLU 41	11.45	-2679	-139	-109.93		18770	0.5098	8058	1150			8.25	Si
SLU 41	13.55	-3847	-125	87.48		26947	0.5098	9149	1306			10.43	Si
SLU 37	11.45	-2977	-142	-111.94		20853	0.5098	8336	1190			8.38	Si
SLU 37	13.55	-4241	-130	89.48		29711	0.5098	9517	1359			10.42	Si

Verifica a taglio nel piano secondo D.M. 17-01-18 (N.T.C.) §7.8.2.2.2 con rottura per scorrimento in combinazioni sismiche, γM = 2

Comb.	Quota	N	V par	M	σ0	σN	l'	fvd	Vt scorr.	Vt fess.diag.	Vt,lim	c.s.	Verifica
SLV 9	11.45	-1629	-494	-505.77		0	0	8333	0			0	No, Vu<V
SLV 9	13.55	-3741	-398	395.33		29843	0.4477	14302	1793			4.51	Si
SLV 14	11.45	-100	-1042	-999.93		0	0	8333	0			0	No, Vu<V
SLV 14	13.55	-332	-718	856.84		0	0	8333	0			0	No, Vu<V
SLV 12	11.45	-1892	-214	-139.33		13256	0.5098	10985	1568			7.34	Si
SLV 12	13.55	-457	-105	160.29		0	0	8333	0			0	No, Vu<V
SLV 13	11.45	-100	-1042	-999.93		0	0	8333	0			0	No, Vu<V
SLV 13	13.55	-332	-718	856.84		0	0	8333	0			0	No, Vu<V
SLV 10	11.45	-1629	-494	-505.77		0	0	8333	0			0	No, Vu<V
SLV 10	13.55	-3741	-398	395.33		29843	0.4477	14302	1793			4.51	Si
SLV 11	11.45	-1892	-214	-139.33		13256	0.5098	10985	1568			7.34	Si
SLV 11	13.55	-457	-105	160.29		0	0	8333	0			0	No, Vu<V
SLV 3	11.45	-4811	889	888.32		81529	0.2107	16250	959			1.08	Si
SLV 3	13.55	-5803	577	-767.31		56312	0.368	16250	1675			2.9	Si
SLV 15	11.45	-179	-958	-890		0	0	8333	0			0	No, Vu<V
SLV 15	13.55	653	-630	786.33		0	0	8333	0			0	No, Vu<V
SLV 16	11.45	-179	-958	-890		0	0	8333	0			0	No, Vu<V
SLV 16	13.55	653	-630	786.33		0	0	8333	0			0	No, Vu<V
SLV 4	11.45	-4811	889	888.32		81529	0.2107	16250	959			1.08	Si
SLV 4	13.55	-5803	577	-767.31		56312	0.368	16250	1675			2.9	Si

Verifica a pressoflessione fuori piano D.M. 17-01-18 (N.T.C.)

quota 13.025 Wa 0.05 denominatore 8 γM = 2

Comb.	fd	Sa	σ0	N	M	Mc	Coeff.s.	Verifica
SLV 15	143750	0.52	0	239	58.24	0	0	No, Trazione
SLV 16	143750	0.52	0	239	58.24	0	0	No, Trazione
SLV 13	143750	0.52	3005	-429	58.24	58.58	1.01	Si
SLV 14	143750	0.52	3005	-429	58.24	58.58	1.01	Si
SLV 11	143750	0.52	5030	-718	58.24	96.39	1.66	Si
SLV 12	143750	0.52	5030	-718	58.24	96.39	1.66	Si
SLV 7	143750	0.52	15457	-2206	58.24	269.82	4.63	Si
SLV 8	143750	0.52	15457	-2206	58.24	269.82	4.63	Si
SLV 9	143750	0.52	20628	-2945	58.24	342.65	5.88	Si
SLV 10	143750	0.52	20628	-2945	58.24	342.65	5.88	Si

Verifica dei meccanismi locali di collasso con analisi cinematica lineare

forza di aggancio al piano = 0 quota mezzeria = 13.025 Wa = 0.05 Ta = 0.0592

Comb.	N top	N base	V orto	α0	M*	e*	a0*	aLim	Verifica
SLV 12	-198	-1892	119	0	92.5	0.901	0	10.02695	No
SLV 9	-1277	-1629	-137	0	194.9	0.916	0	10.02695	No
SLV 15	880	-179	27	0	0	0	0	11.09238	No, Trazione
SLV 8	-1445	-3282	122	0	211.7	0.921	0	10.02695	No
SLV 14	556	-100	-50	0	0	0	0	11.09238	No, Trazione
SLV 13	556	-100	-50	0	0	0	0	11.09238	No, Trazione
SLV 11	-198	-1892	119	0	92.5	0.901	0	10.02695	No
SLV 7	-1445	-3282	122	0	211.7	0.921	0	10.02695	No
SLV 16	880	-179	27	0	0	0	0	11.09238	No, Trazione
SLV 10	-1277	-1629	-137	0	194.9	0.916	0	10.02695	No

Tabella dei coefficienti di sicurezza minimi

Stato limite	Coeff.s.	Comb.	Verifica
PF_SLU	4.781	SLU 41	Si
V_SLU	8.25	SLU 41	Si
PF_SLV	0	SLV 16	No
V_SLV	0	SLV 9	No
PFFP_SLV	0	SLV 16	No
R_SLV	0	SLV 16	No

Maschio 247

Verifiche condotte secondo D.M. 17-01-18 (N.T.C.)

Dati geometrici

X ini.	Y ini.	X fin.	Y fin.	Quota i.	Quota.s	l	Sp.	h netta	h ini.	h fin.	a	a.s.,sx	a.s.,dx
-12.283	1.046	-12.543	1.046	L6	L7	0.261	0.28	3.15	3.15	3.15			

Caratteristiche del materiale

(Circolare 7 21-01-19 C8.5.I) Muratura in mattoni pieni e malta di calce LC2_Corti

fb	fk	fvk0	fmedio	τ0	fv0	μ	ϕ	fv,lim	E	G	FC
600000			345000	9000	20000	0.58	0.77	32500	320000000	128000000	1.2

Verifica a pressoflessione nel piano secondo D.M. 17-01-18 NTC §7.8.2.2.1 in combinazioni non sismiche, γM = 3

Comb.	Quota	N	M	σ0	Mu	c.s.	Verifica
SLU 59	11.45	-2463	-26.22	33762	187.85	7.163	Si
SLU 59	13.95	-372	55.79	0	0	0	No, e>l/2
SLU 55	11.45	-2243	-22.79	30754	181.9	7.983	Si
SLU 55	13.95	-326	49.32	0	0	0	No, e>l/2
SLU 56	11.45	-2566	-26.76	35177	189.91	7.096	Si
SLU 56	13.95	-391	58.82	0	0	0	No, e>l/2
SLU 54	11.45	-2342	-23.24	32111	184.85	7.953	Si
SLU 54	13.95	-345	52.24	0	0	0	No, e>l/2
SLU 53	11.45	-2355	-23.5	32287	185.2	7.882	Si
SLU 53	13.95	-346	52.58	0	0	0	No, e>l/2
SLU 61	11.45	-2035	-20.62	27893	174.29	8.452	Si
SLU 61	13.95	-282	42.95	0	0	0	No, e>l/2

Comb.	Quota	N	M	σ0	Mu	c.s.	Verifica
SLU 58	11.45	-2476	-26.48	33938	188.13	7.105	Si
SLU 58	13.95	-373	56.13	0	0	0	No, e>l/2
SLU 57	11.45	-2553	-26.51	35001	189.68	7.156	Si
SLU 57	13.95	-390	58.48	0	0	0	No, e>l/2
SLU 60	11.45	-2048	-20.88	28070	174.82	8.374	Si
SLU 60	13.95	-283	43.29	0	0	0	No, e>l/2
SLU 1	11.45	-1628	-14.59	22314	153.95	10.555	Si
SLU 1	13.95	-225	35.08	0	0	0	No, e>l/2

Verifica a pressoflessione nel piano secondo D.M. 17-01-18 NTC §7.8.2.2.1 in combinazioni sismiche, γM = 2

Comb.	Quota	N	M	σ0	Mu	c.s.	Verifica
SLV 3	11.45	-1695	233.33	0	0	0	No, e>l/2
SLV 3	13.95	-545	78.8	0	0	0	No, e>l/2
SLV 1	11.45	-1973	229.23	27041	200.08	0.873	No, M>Mu
SLV 1	13.95	-595	88.62	0	0	0	No, e>l/2
SLV 6	11.45	-2176	51.2	29835	214.28	4.185	Si
SLV 6	13.95	-417	66.52	0	0	0	No, e>l/2
SLV 7	11.45	-1251	64.88	17151	140.1	2.159	Si
SLV 7	13.95	-251	33.77	0	0	0	No, e>l/2
SLV 9	11.45	-2074	-97.29	28425	207.27	2.13	Si
SLV 9	13.95	-215	37.75	0	0	0	No, e>l/2
SLV 5	11.45	-2176	51.2	29835	214.28	4.185	Si
SLV 5	13.95	-417	66.52	0	0	0	No, e>l/2
SLV 4	11.45	-1695	233.33	0	0	0	No, e>l/2
SLV 4	13.95	-545	78.8	0	0	0	No, e>l/2
SLV 8	11.45	-1251	64.88	17151	140.1	2.159	Si
SLV 8	13.95	-251	33.77	0	0	0	No, e>l/2
SLV 2	11.45	-1973	229.23	27041	200.08	0.873	No, M>Mu
SLV 2	13.95	-595	88.62	0	0	0	No, e>l/2
SLV 10	11.45	-2074	-97.29	28425	207.27	2.13	Si
SLV 10	13.95	-215	37.75	0	0	0	No, e>l/2

Verifica a taglio nel piano secondo D.M. 17-01-18 (N.T.C.) §7.8.2.2.2 con rottura per scorrimento in combinazioni non sismiche, γM = 3

Comb.	Quota	N	V par	M	σ0	σN	l'	fvd	Vt scorr.	Vt fess.diag.	Vt,lim	c.s.	Verifica
SLU 60	11.45	-2048	-24	-20.88		28070	0.2605	9298	678			28.24	Si
SLU 60	13.95	-283	-12	43.29		0	0	5556	0			0	No, Vu<V
SLU 1	11.45	-1628	-17	-14.59		22314	0.2605	8531	622			36.32	Si
SLU 1	13.95	-225	-31	35.08		0	0	5556	0			0	No, Vu<V
SLU 53	11.45	-2355	-27	-23.5		32287	0.2605	9861	719			26.35	Si
SLU 53	13.95	-346	-2	52.58		0	0	5556	0			0	No, Vu<V
SLU 61	11.45	-2035	-24	-20.62		27893	0.2605	9275	677			28.49	Si
SLU 61	13.95	-282	-8	42.95		0	0	5556	0			0	No, Vu<V
SLU 54	11.45	-2342	-27	-23.24		32111	0.2605	9837	718			26.55	Si
SLU 54	13.95	-345	2	52.24		0	0	5556	0			0	No, Vu<V
SLU 56	11.45	-2566	-31	-26.76		35177	0.2605	10246	747			24.17	Si
SLU 56	13.95	-391	17	58.82		0	0	5556	0			0	No, Vu<V
SLU 55	11.45	-2243	-26	-22.79		30754	0.2605	9656	704			26.78	Si
SLU 55	13.95	-326	3	49.32		0	0	5556	0			0	No, Vu<V
SLU 58	11.45	-2476	-30	-26.48		33938	0.2605	10081	735			24.21	Si
SLU 58	13.95	-373	16	56.13		0	0	5556	0			0	No, Vu<V
SLU 57	11.45	-2553	-31	-26.51		35001	0.2605	10222	746			24.32	Si
SLU 57	13.95	-390	22	58.48		0	0	5556	0			0	No, Vu<V
SLU 59	11.45	-2463	-30	-26.22		33762	0.2605	10057	734			24.37	Si
SLU 59	13.95	-372	20	55.79		0	0	5556	0			0	No, Vu<V

Verifica a taglio nel piano secondo D.M. 17-01-18 (N.T.C.) §7.8.2.2.2 con rottura per scorrimento in combinazioni sismiche, γM = 2

Comb.	Quota	N	V par	M	σ0	σN	l'	fvd	Vt scorr.	Vt fess.diag.	Vt,lim	c.s.	Verifica
SLV 3	11.45	-1695	246	233.33		0	0	8333	0			0	No, Vu<V
SLV 3	13.95	-545	257	78.8		0	0	8333	0			0	No, Vu<V
SLV 4	11.45	-1695	246	233.33		0	0	8333	0			0	No, Vu<V
SLV 4	13.95	-545	257	78.8		0	0	8333	0			0	No, Vu<V
SLV 8	11.45	-1251	59	64.88		18997	0.2352	12133	799			13.64	Si
SLV 8	13.95	-251	169	33.77		0	0	8333	0			0	No, Vu<V
SLV 9	11.45	-2074	-96	-97.29		29618	0.25	14257	998			10.38	Si
SLV 9	13.95	-215	-201	37.75		0	0	8333	0			0	No, Vu<V
SLV 2	11.45	-1973	247	229.23		167110	0.0422	16250	192			0.78	No, Vu<V
SLV 2	13.95	-595	188	88.62		0	0	8333	0			0	No, Vu<V
SLV 5	11.45	-2176	63	51.2		29835	0.2605	14300	1043			16.52	Si
SLV 5	13.95	-417	-58	66.52		0	0	8333	0			0	No, Vu<V
SLV 10	11.45	-2074	-96	-97.29		29618	0.25	14257	998			10.38	Si
SLV 10	13.95	-215	-201	37.75		0	0	8333	0			0	No, Vu<V
SLV 7	11.45	-1251	59	64.88		18997	0.2352	12133	799			13.64	Si
SLV 7	13.95	-251	169	33.77		0	0	8333	0			0	No, Vu<V
SLV 1	11.45	-1973	247	229.23		167110	0.0422	16250	192			0.78	No, Vu<V
SLV 1	13.95	-595	188	88.62		0	0	8333	0			0	No, Vu<V
SLV 6	11.45	-2176	63	51.2		29835	0.2605	14300	1043			16.52	Si
SLV 6	13.95	-417	-58	66.52		0	0	8333	0			0	No, Vu<V

Verifica a pressoflessione fuori piano D.M. 17-01-18 (N.T.C.)

quota 13.025 Wa 0.05 denominatore 8 γM = 2

Comb.	fd	Sa	σ0	N	M	Mc	Coeff.s.	Verifica
SLV 12	143750	0.52	12905	-941	29.76	117.87	3.96	Si
SLV 11	143750	0.52	12905	-941	29.76	117.87	3.96	Si
SLV 7	143750	0.52	14213	-1037	29.76	128.27	4.31	Si
SLV 8	143750	0.52	14213	-1037	29.76	128.27	4.31	Si
SLV 15	143750	0.52	15646	-1141	29.76	139.33	4.68	Si
SLV 16	143750	0.52	15646	-1141	29.76	139.33	4.68	Si
SLV 13	143750	0.52	19305	-1408	29.76	166	5.58	Si
SLV 14	143750	0.52	19305	-1408	29.76	166	5.58	Si
SLV 3	143750	0.52	20008	-1460	29.76	170.87	5.74	Si

Comb.	fd	Sa	σ0	N	M	Mc	Coeff.s.	Verifica
SLV 4	143750	0.52	20008	-1460	29.76	170.87	5.74	Si

Verifica dei meccanismi locali di collasso con analisi cinematica lineare

forza di aggancio al piano = 0 quota mezzeria = 13.025 Wa = 0.05 Ta = 0.0592

Comb.	N top	N base	V orto	α0	M*	e*	a0*	aLim	Verifica
SLV 15	5	-1352	-1	0	0	0	0	11.09238	No, Trazione
SLV 16	5	-1352	-1	0	0	0	0	11.09238	No, Trazione
SLV 1	-617	-1973	0	0.055	96	0.914	0.8755	11.09238	No
SLV 2	-617	-1973	0	0.055	96	0.914	0.8755	11.09238	No
SLV 4	-540	-1695	-1	0.055	88.4	0.909	0.88202	11.09238	No
SLV 3	-540	-1695	-1	0.055	88.4	0.909	0.88202	11.09238	No
SLV 6	-515	-2176	2	0.054	85.9	0.907	0.86625	10.02695	No
SLV 5	-515	-2176	2	0.054	85.9	0.907	0.86625	10.02695	No
SLV 10	-351	-2074	2	0.057	69.8	0.896	0.92602	10.02695	No
SLV 9	-351	-2074	2	0.057	69.8	0.896	0.92602	10.02695	No

Tabella dei coefficienti di sicurezza minimi

Stato limite	Coeff.s.	Comb.	Verifica
PF_SLU	0	SLU 1	No
V_SLU	0	SLU 1	No
PF_SLV	0	SLV 16	No
V_SLV	0	SLV 1	No
PFFP_SLV	3.961	SLV 11	Si
R_SLV	0	SLV 16	No

Maschio 248

Verifiche condotte secondo D.M. 17-01-18 (N.T.C.)

Dati geometrici

X ini.	Y ini.	X fin.	Y fin.	Quota i.	Quota.s	l	Sp.	h netta	h ini.	h fin.	a	a.s.,sx	a.s.,dx
-0.134	1.046	-11.163	1.046	L6	L7	11.029	0.28	3.15	3.15	3.15			

Caratteristiche del materiale

(Circolare 7 21-01-19 C8.5.I) Muratura in mattoni pieni e malta di calce LC2_Corti

fb	fk	fvk0	fmedio	τ0	fv0	μ	ϕ	fv,lim	E	G	FC
600000			345000	9000	20000	0.58	0.77	32500	320000000	128000000	1.2

Verifica a pressoflessione nel piano secondo D.M. 17-01-18 NTC §7.8.2.2.1 in combinazioni non sismiche, γM = 3

Comb.	Quota	N	M	σ0	Mu	c.s.	Verifica
SLU 72	11.45	-51325	48526.35	16620	225282.5	4.642	Si
SLU 72	13.95	-39073	68293.14	12653	181999.37	2.665	Si
SLU 79	11.45	-49636	49902.99	16073	219709.11	4.403	Si
SLU 79	13.95	-38807	68536.54	12566	180985.75	2.641	Si
SLU 38	11.45	-39800	42200.77	12888	184751.15	4.378	Si
SLU 38	13.95	-32532	57658.88	10535	156198.64	2.709	Si
SLU 71	11.45	-51433	48698.85	16655	225635.54	4.633	Si
SLU 71	13.95	-39065	68527.22	12650	181969.68	2.655	Si
SLU 50	11.45	-50486	45415.77	16348	222529.46	4.9	Si
SLU 50	13.95	-37121	65152.1	12021	174495.26	2.678	Si
SLU 37	11.45	-39908	42373.27	12923	185158.88	4.37	Si
SLU 37	13.95	-32525	57892.96	10532	156166.72	2.698	Si
SLU 59	11.45	-48581	46447.4	15732	216162.39	4.654	Si
SLU 59	13.95	-36870	64927.34	11939	173519.74	2.673	Si
SLU 58	11.45	-48689	46619.9	15767	216528.45	4.645	Si
SLU 58	13.95	-36862	65161.42	11937	173489.3	2.662	Si
SLU 80	11.45	-49528	49730.49	16038	219347.55	4.411	Si
SLU 80	13.95	-38814	68302.46	12569	181015.53	2.65	Si
SLU 51	11.45	-50378	45243.26	16313	222171.92	4.911	Si
SLU 51	13.95	-37129	64918.02	12023	174525.61	2.688	Si

Verifica a pressoflessione nel piano secondo D.M. 17-01-18 NTC §7.8.2.2.1 in combinazioni sismiche, γM = 2

Comb.	Quota	N	M	σ0	Mu	c.s.	Verifica
SLV 9	11.45	-32131	49630.76	10405	162099.12	3.266	Si
SLV 9	13.95	-25459	67227.34	8244	130919.98	1.947	Si
SLV 6	11.45	-28060	44235.98	9087	143231.59	3.238	Si
SLV 6	13.95	-20431	37438.4	6616	106565.79	2.846	Si
SLV 5	11.45	-28060	44235.98	9087	143231.59	3.238	Si
SLV 5	13.95	-20431	37438.4	6616	106565.79	2.846	Si
SLV 10	11.45	-32131	49630.76	10405	162099.12	3.266	Si
SLV 10	13.95	-25459	67227.34	8244	130919.98	1.947	Si
SLV 16	11.45	-41003	34084.47	13278	201540.77	5.913	Si
SLV 16	13.95	-32233	86342.12	10438	162566.06	1.883	Si
SLV 13	11.45	-39100	44164.56	12662	193275.55	4.376	Si
SLV 13	13.95	-31814	93560.11	10302	160645.95	1.717	Si
SLV 15	11.45	-41003	34084.47	13278	201540.77	5.913	Si
SLV 15	13.95	-32233	86342.12	10438	162566.06	1.883	Si
SLV 14	11.45	-39100	44164.56	12662	193275.55	4.376	Si
SLV 14	13.95	-31814	93560.11	10302	160645.95	1.717	Si
SLV 11	11.45	-38474	16030.46	12459	190530.3	11.886	Si
SLV 11	13.95	-26857	43167.38	8697	137560.04	3.187	Si
SLV 12	11.45	-38474	16030.46	12459	190530.3	11.886	Si
SLV 12	13.95	-26857	43167.38	8697	137560.04	3.187	Si

Verifica a taglio nel piano secondo D.M. 17-01-18 (N.T.C.) §7.8.2.2.2 con rottura per scorrimento in combinazioni non sismiche, γM = 3

Comb.	Quota	N	V par	M	σ0	σN	l'	fvd	Vt scorr.	Vt fess.diag.	Vt,lim	c.s.	Verifica
SLU 83	11.45	-45242	-3290	45901.6		14650	11.029	7509	23189			7.05	Si
SLU 83	13.95	-34858	-3377	60954.24		11288	11.029	7061	21804			6.46	Si
SLU 36	11.45	-42215	-3266	42395.04		13670	11.029	7378	22785			6.98	Si
SLU 36	13.95	-35507	-3367	57068.31		11498	11.029	7089	21890			6.5	Si
SLU 35	11.45	-42323	-3240	42567.54		13705	11.029	7383	22799			7.04	Si
SLU 35	13.95	-35499	-3330	57302.39		11495	11.029	7088	21889			6.57	Si
SLU 38	11.45	-39800	-3193	42200.77		12888	11.029	7274	22463			7.04	Si
SLU 38	13.95	-32532	-3296	57658.88		10535	11.029	6960	21494			6.52	Si
SLU 84	11.45	-45134	-3315	45729.1		14615	11.029	7504	23174			6.99	Si
SLU 84	13.95	-34865	-3414	60720.16		11290	11.029	7061	21805			6.39	Si
SLU 78	11.45	-51943	-3451	49924.75		16820	11.029	7798	24082			6.98	Si
SLU 78	13.95	-41789	-3560	67711.9		13532	11.029	7360	22728			6.38	Si
SLU 77	11.45	-52052	-3425	50097.26		16855	11.029	7803	24096			7.04	Si
SLU 77	13.95	-41781	-3524	67945.98		13530	11.029	7359	22727			6.45	Si
SLU 42	11.45	-35406	-3131	38199.38		11465	11.029	7084	21877			6.99	Si
SLU 42	13.95	-28583	-3220	50076.57		9256	11.029	6790	20967			6.51	Si
SLU 79	11.45	-49636	-3351	49902.99		16073	11.029	7699	23774			7.09	Si
SLU 79	13.95	-38807	-3453	68536.54		12566	11.029	7231	22330			6.47	Si
SLU 80	11.45	-49528	-3377	49730.49		16038	11.029	7694	23760			7.04	Si
SLU 80	13.95	-38814	-3490	68302.46		12569	11.029	7231	22331			6.4	Si

Verifica a taglio nel piano secondo D.M. 17-01-18 (N.T.C.) §7.8.2.2.2 con rottura per scorrimento in combinazioni sismiche, γM = 2

Comb.	Quota	N	V par	M	σ0	σN	l'	fvd	Vt scorr.	Vt fess.diag.	Vt,lim	c.s.	Verifica
SLV 4	11.45	-27434	19029	16101.88		8884	11.029	10110	31221			1.64	Si
SLV 4	13.95	-15474	12191	-12954.33		5011	11.029	9335	28829			2.36	Si
SLV 16	11.45	-41003	-27218	34084.47		13278	11.029	10989	33935			1.25	Si
SLV 16	13.95	-32233	-20729	86342.12		13531	8.5075	11040	26297			1.27	Si
SLV 15	11.45	-41003	-27218	34084.47		13278	11.029	10989	33935			1.25	Si
SLV 15	13.95	-32233	-20729	86342.12		13531	8.5075	11040	26297			1.27	Si
SLV 2	11.45	-25531	23977	26181.97		8267	11.029	9987	30841			1.29	Si
SLV 2	13.95	-15054	17399	-5736.34		4875	11.029	9308	28745			1.65	Si
SLV 14	11.45	-39100	-22270	44164.56		12662	11.029	10866	33554			1.51	Si
SLV 14	13.95	-31814	-15521	93560.11		14716	7.7209	11277	24378			1.57	Si
SLV 12	11.45	-38474	-16804	16030.46		12459	11.029	10825	33429			1.99	Si
SLV 12	13.95	-26857	-15284	43167.38		8697	11.029	10073	31106			2.04	Si
SLV 1	11.45	-25531	23977	26181.97		8267	11.029	9987	30841			1.29	Si
SLV 1	13.95	-15054	17399	-5736.34		4875	11.029	9308	28745			1.65	Si
SLV 3	11.45	-27434	19029	16101.88		8884	11.029	10110	31221			1.64	Si
SLV 3	13.95	-15474	12191	-12954.33		5011	11.029	9335	28829			2.36	Si
SLV 11	11.45	-38474	-16804	16030.46		12459	11.029	10825	33429			1.99	Si
SLV 11	13.95	-26857	-15284	43167.38		8697	11.029	10073	31106			2.04	Si
SLV 13	11.45	-39100	-22270	44164.56		12662	11.029	10866	33554			1.51	Si
SLV 13	13.95	-31814	-15521	93560.11		14716	7.7209	11277	24378			1.57	Si

Verifica a pressoflessione fuori piano D.M. 17-01-18 (N.T.C.)

quota 13.025 Wa 0.05 denominatore 8 γM = 2

Comb.	fd	Sa	σ0	N	M	Mc	Coeff.s.	Verifica
SLV 2	143750	0.52	5824	-17984	1259.88	2397.81	1.9	Si
SLV 1	143750	0.52	5824	-17984	1259.88	2397.81	1.9	Si
SLV 3	143750	0.52	6435	-19871	1259.88	2635.38	2.09	Si
SLV 4	143750	0.52	6435	-19871	1259.88	2635.38	2.09	Si
SLV 5	143750	0.52	6868	-21210	1259.88	2802.54	2.22	Si
SLV 6	143750	0.52	6868	-21210	1259.88	2802.54	2.22	Si
SLV 10	143750	0.52	8375	-25862	1259.88	3372.48	2.68	Si
SLV 9	143750	0.52	8375	-25862	1259.88	3372.48	2.68	Si
SLV 7	143750	0.52	8904	-27497	1259.88	3569.11	2.83	Si
SLV 8	143750	0.52	8904	-27497	1259.88	3569.11	2.83	Si

Verifica dei meccanismi locali di collasso con analisi cinematica lineare

forza di aggancio al piano = 0 quota mezzeria = 13.025 Wa = 0.05 Ta = 0.0592

Comb.	N top	N base	V orto	α0	M*	e*	a0*	aLim	Verifica
SLV 6	-15905	-28060	-430	0.043	3056.3	0.897	0.69327	10.02695	No
SLV 5	-15905	-28060	-430	0.043	3056.3	0.897	0.69327	10.02695	No
SLV 10	-19852	-32131	-419	0.043	3443	0.904	0.69773	10.02695	No
SLV 9	-19852	-32131	-419	0.043	3443	0.904	0.69773	10.02695	No
SLV 11	-22601	-38474	383	0.045	3714.9	0.909	0.71419	10.02695	No
SLV 12	-22601	-38474	383	0.045	3714.9	0.909	0.71419	10.02695	No
SLV 7	-18653	-34403	372	0.045	3324.9	0.902	0.72615	10.02695	No
SLV 8	-18653	-34403	372	0.045	3324.9	0.902	0.72615	10.02695	No
SLV 13	-25419	-39100	-126	0.052	3995.4	0.913	0.83003	11.09238	No
SLV 14	-25419	-39100	-126	0.052	3995.4	0.913	0.83003	11.09238	No

Tabella dei coefficienti di sicurezza minimi

Stato limite	Coeff.s.	Comb.	Verifica
PF_SLU	2.641	SLU 79	Si
V_SLU	6.384	SLU 78	Si
PF_SLV	1.717	SLV 13	Si
V_SLV	1.247	SLV 15	Si
PFFP_SLV	1.903	SLV 1	Si
R_SLV	0.069	SLV 5	No

Maschio 249

Verifiche condotte secondo D.M. 17-01-18 (N.T.C.)

Dati geometrici

X ini.	Y ini.	X fin.	Y fin.	Quota i.	Quota.s	l	Sp.	h netta	h ini.	h fin.	a	a.s.,sx	a.s.,dx
-11.893	3.334	-15.038	3.334	L6	L7	3.145	0.14	3.15	3.15	3.15			

Caratteristiche del materiale

(Circolare 7 21-01-19 C8.5.I) Muratura in mattoni pieni e malta di calce LC2_Corti

fb	fk	fvk0	fmedio	τ0	fv0	μ	ϕ	fv,lim	E	G	FC
600000			345000	9000	20000	0.58	0.77	32500	320000000	128000000	1.2

Verifica a pressoflessione nel piano secondo D.M. 17-01-18 NTC §7.8.2.2.1 in combinazioni non sismiche, γM = 3

Comb.	Quota	N	M	σ0	Mu	c.s.	Verifica
SLU 32	11.45	-3061	-1297.78	6952	4402.05	3.392	Si
SLU 32	13.55	-2310	-20.79	5247	3398.61	163.443	Si
SLU 33	11.45	-3060	-1298.6	6949	4400.59	3.389	Si
SLU 33	13.55	-2310	-20.58	5246	3398.13	165.119	Si
SLU 36	11.45	-3034	-1323.71	6891	4367.27	3.299	Si
SLU 36	13.55	-2306	-14.55	5238	3392.81	233.262	Si
SLU 39	11.45	-2312	-1049.42	5251	3400.67	3.241	Si
SLU 39	13.55	-1585	265.98	3601	2382.76	8.958	Si
SLU 41	11.45	-2286	-1074.54	5193	3365.68	3.132	Si
SLU 41	13.55	-1582	272.02	3592	2377.2	8.739	Si
SLU 37	11.45	-2426	-1044.67	5510	3556.23	3.404	Si
SLU 37	13.55	-1630	196.17	3702	2446.35	12.471	Si
SLU 40	11.45	-2311	-1050.24	5248	3399.14	3.237	Si
SLU 40	13.55	-1585	266.19	3600	2382.26	8.949	Si
SLU 35	11.45	-3035	-1322.89	6894	4368.73	3.302	Si
SLU 35	13.55	-2306	-14.76	5238	3393.29	229.913	Si
SLU 42	11.45	-2285	-1075.36	5190	3364.14	3.128	Si
SLU 42	13.55	-1581	272.23	3591	2376.7	8.731	Si
SLU 38	11.45	-2425	-1045.49	5507	3554.71	3.4	Si
SLU 38	13.55	-1630	196.38	3701	2445.85	12.455	Si

Verifica a pressoflessione nel piano secondo D.M. 17-01-18 NTC §7.8.2.2.1 in combinazioni sismiche, γM = 2

Comb.	Quota	N	M	σ0	Mu	c.s.	Verifica
SLV 15	11.45	-2568	-3973.91	5832	3844.89	0.968	No, M>Mu
SLV 15	13.55	-947	1524.04	0	0	0	No, e>l/2
SLV 16	11.45	-2568	-3973.91	5832	3844.89	0.968	No, M>Mu
SLV 16	13.55	-947	1524.04	0	0	0	No, e>l/2
SLV 14	11.45	-3686	-3354.36	8371	5398.1	1.609	Si
SLV 14	13.55	-1327	1157.81	3015	2035.82	1.758	Si
SLV 13	11.45	-3686	-3354.36	8371	5398.1	1.609	Si
SLV 13	13.55	-1327	1157.81	3015	2035.82	1.758	Si
SLV 4	11.45	-1888	1787.69	4288	2864.44	1.602	Si
SLV 4	13.55	-2013	-1216.52	4572	3046.83	2.505	Si
SLV 12	11.45	-1026	-2680.17	0	0	0	No, e>l/2
SLV 12	13.55	-875	992.11	1988	1353.96	1.365	Si
SLV 8	11.45	-822	-951.69	1867	1272.6	1.337	Si
SLV 8	13.55	-1195	169.94	2715	1837.69	10.814	Si
SLV 7	11.45	-822	-951.69	1867	1272.6	1.337	Si
SLV 7	13.55	-1195	169.94	2715	1837.69	10.814	Si
SLV 11	11.45	-1026	-2680.17	0	0	0	No, e>l/2
SLV 11	13.55	-875	992.11	1988	1353.96	1.365	Si
SLV 3	11.45	-1888	1787.69	4288	2864.44	1.602	Si
SLV 3	13.55	-2013	-1216.52	4572	3046.83	2.505	Si

Verifica a taglio nel piano secondo D.M. 17-01-18 (N.T.C.) §7.8.2.2.2 con rottura per scorrimento in combinazioni non sismiche, γM = 3

Comb.	Quota	N	V par	M	σ0	σN	l'	fvd	Vt scorr.	Vt fess.diag.	Vt,lim	c.s.	Verifica
SLU 74	11.45	-3951	209	-1450.1		8973	3.1448	6752	2973			14.19	Si
SLU 74	13.55	-2789	209	-92.16		6335	3.1448	6400	2818			13.47	Si
SLU 82	11.45	-3201	209	-1202.56		7269	3.1448	6525	2873			13.72	Si
SLU 82	13.55	-2064	209	194.82		4688	3.1448	6181	2721			13.01	Si
SLU 78	11.45	-3924	211	-1476.04		8913	3.1448	6744	2969			14.08	Si
SLU 78	13.55	-2785	211	-85.92		6325	3.1448	6399	2817			13.37	Si
SLU 41	11.45	-2286	197	-1074.54		5193	3.1448	6248	2751			13.96	Si
SLU 41	13.55	-1582	197	272.02		3592	3.1448	6035	2657			13.5	Si
SLU 42	11.45	-2285	197	-1075.36		5190	3.1448	6248	2751			13.95	Si
SLU 42	13.55	-1581	197	272.23		3591	3.1448	6034	2657			13.49	Si
SLU 81	11.45	-3202	209	-1201.74		7272	3.1448	6525	2873			13.72	Si
SLU 81	13.55	-2064	209	194.61		4689	3.1448	6181	2721			13.01	Si
SLU 77	11.45	-3925	211	-1475.22		8915	3.1448	6744	2969			14.08	Si
SLU 77	13.55	-2785	211	-86.13		6326	3.1448	6399	2817			13.38	Si
SLU 75	11.45	-3950	210	-1450.92		8971	3.1448	6752	2973			14.18	Si
SLU 75	13.55	-2789	209	-91.95		6334	3.1448	6400	2818			13.46	Si
SLU 83	11.45	-3176	211	-1226.86		7214	3.1448	6517	2869			13.62	Si
SLU 83	13.55	-2060	210	200.64		4680	3.1448	6180	2721			12.93	Si
SLU 84	11.45	-3175	211	-1227.68		7212	3.1448	6517	2869			13.61	Si
SLU 84	13.55	-2060	211	200.86		4679	3.1448	6179	2721			12.92	Si

Verifica a taglio nel piano secondo D.M. 17-01-18 (N.T.C.) §7.8.2.2.2 con rottura per scorrimento in combinazioni sismiche, γM = 2

Comb.	Quota	N	V par	M	σ0	σN	l'	fvd	Vt scorr.	Vt fess.diag.	Vt,lim	c.s.	Verifica
SLV 15	11.45	-2568	-2724	-3973.91		246451	0.0744	16250	169			0.06	No, Vu<V
SLV 15	13.55	-947	-1799	1524.04		0	0	8333	0			0	No, Vu<V
SLV 12	11.45	-1026	-657	-2680.17		0	0	8333	0			0	No, Vu<V
SLV 12	13.55	-875	-341	992.11		4748	1.3169	9283	1711			5.02	Si
SLV 16	11.45	-2568	-2724	-3973.91		246451	0.0744	16250	169			0.06	No, Vu<V
SLV 16	13.55	-947	-1799	1524.04		0	0	8333	0			0	No, Vu<V
SLV 1	11.45	-3006	2955	2407.24		9276	2.3145	10189	3301			1.12	Si
SLV 1	13.55	-2394	2030	-1582.75		6255	2.7338	9584	3668			1.81	Si
SLV 13	11.45	-3686	-2776	-3354.36		13250	1.9868	10983	3055			1.1	Si
SLV 13	13.55	-1327	-1877	1157.81		4514	2.1006	9236	2716			1.45	Si

Comb.	Quota	N	V par	M	σ0	σN	l'	fvd	Vt scorr.	Vt fess.diag.	Vt,lim	c.s.	Verifica
SLV 14	11.45	-3686	-2776	-3354.36		13250	1.9868	10983	3055			1.1	Si
SLV 14	13.55	-1327	-1877	1157.81		4514	2.1006	9236	2716			1.45	Si
SLV 2	11.45	-3006	2955	2407.24		9276	2.3145	10189	3301			1.12	Si
SLV 2	13.55	-2394	2030	-1582.75		6255	2.7338	9584	3668			1.81	Si
SLV 3	11.45	-1888	3008	1787.69		7186	1.8765	9771	2567			0.85	No, Vu<V
SLV 3	13.55	-2013	2108	-1216.52		4951	2.9042	9324	3791			1.8	Si
SLV 11	11.45	-1026	-657	-2680.17		0	0	8333	0			0	No, Vu<V
SLV 11	13.55	-875	-341	992.11		4748	1.3169	9283	1711			5.02	Si
SLV 4	11.45	-1888	3008	1787.69		7186	1.8765	9771	2567			0.85	No, Vu<V
SLV 4	13.55	-2013	2108	-1216.52		4951	2.9042	9324	3791			1.8	Si

Verifica a pressoflessione fuori piano D.M. 17-01-18 (N.T.C.)

quota 13.025 Wa 0.03 denominatore 8 γM = 2

Comb.	fd	Sa	σ0	N	M	Mc	Coeff.s.	Verifica
SLV 8	143750	0.52	0	-1259	187.79	0	0	No, e>t/2
SLV 11	143750	0.52	0	-982	187.79	0	0	No, e>t/2
SLV 2	143750	0.52	0	-2642	187.79	0	0	No, e>t/2
SLV 1	143750	0.52	0	-2642	187.79	0	0	No, e>t/2
SLV 4	143750	0.52	0	-2153	187.79	0	0	No, e>t/2
SLV 12	143750	0.52	0	-982	187.79	0	0	No, e>t/2
SLV 9	143750	0.52	0	-2612	187.79	0	0	No, e>t/2
SLV 7	143750	0.52	0	-1259	187.79	0	0	No, e>t/2
SLV 3	143750	0.52	0	-2153	187.79	0	0	No, e>t/2
SLV 10	143750	0.52	0	-2612	187.79	0	0	No, e>t/2

Verifica dei meccanismi locali di collasso con analisi cinematica lineare

forza di aggancio al piano = 0 quota mezzeria = 13.025 Wa = 0.03 Ta = 0.1184

Comb.	N top	N base	V orto	α0	M*	e*	a0*	aLim	Verifica
SLV 6	-810	-4548	79	0	301.1	0.893	0	20.8876	No
SLV 12	-675	-1026	-79	0	290.2	0.898	0	20.8876	No
SLV 5	-810	-4548	79	0	301.1	0.893	0	20.8876	No
SLV 11	-675	-1026	-79	0	290.2	0.898	0	20.8876	No
SLV 16	-693	-2568	-60	0.006	291.7	0.897	0.09059	21.1064	No
SLV 15	-693	-2568	-60	0.006	291.7	0.897	0.09059	21.1064	No
SLV 1	-792	-3006	60	0.006	299.6	0.894	0.10334	21.1064	No
SLV 2	-792	-3006	60	0.006	299.6	0.894	0.10334	21.1064	No
SLV 8	-694	-822	-55	0.008	291.8	0.897	0.12894	20.8876	No
SLV 7	-694	-822	-55	0.008	291.8	0.897	0.12894	20.8876	No

Tabella dei coefficienti di sicurezza minimi

Stato limite	Coeff.s.	Comb.	Verifica
PF_SLU	3.128	SLU 42	Si
V_SLU	12.921	SLU 84	Si
PF_SLV	0	SLV 11	No
V_SLV	0	SLV 11	No
PFFP_SLV	0	SLV 1	No
R_SLV	0	SLV 5	No

Maschio 250

Verifiche condotte secondo D.M. 17-01-18 (N.T.C.)

Dati geometrici

X ini.	Y ini.	X fin.	Y fin.	Quota i.	Quota.s	l	Sp.	h netta	h ini.	h fin.	a	a.s.,sx	a.s.,dx
-10.788	3.334	-11.093	3.334	L6	L7	0.305	0.14	3.15	3.15	3.15			

Caratteristiche del materiale

(Circolare 7 21-01-19 C8.5.I) Muratura in mattoni pieni e malta di calce LC2_Corti

fb	fk	fvk0	fmedio	τ0	fv0	μ	ϕ	fv,lim	E	G	FC
600000			345000	9000	20000	0.58	0.77	32500	320000000	128000000	1.2

Verifica a pressoflessione nel piano secondo D.M. 17-01-18 NTC §7.8.2.2.1 in combinazioni non sismiche, γM = 3

Comb.	Quota	N	M	σ0	Mu	c.s.	Verifica
SLU 34	11.45	-532	-62.83	12448	68.67	1.093	Si
SLU 34	13.55	-352	63.71	0	0	0	No, e>l/2
SLU 21	11.45	-494	-55.68	11570	64.64	1.161	Si
SLU 21	13.55	-323	56.43	0	0	0	No, e>l/2
SLU 41	11.45	-519	-69.41	12154	67.33	0.97	No, M>Mu
SLU 41	13.55	-339	70.33	0	0	0	No, e>l/2
SLU 19	11.45	-495	-55.29	11603	64.79	1.172	Si
SLU 19	13.55	-324	55.98	0	0	0	No, e>l/2
SLU 38	11.45	-530	-63.2	12415	68.52	1.084	Si
SLU 38	13.55	-350	64.13	0	0	0	No, e>l/2
SLU 31	11.45	-533	-62.43	12481	68.82	1.102	Si
SLU 31	13.55	-353	63.26	0	0	0	No, e>l/2
SLU 20	11.45	-494	-55.65	11571	64.64	1.162	Si
SLU 20	13.55	-323	56.4	0	0	0	No, e>l/2
SLU 39	11.45	-520	-69.02	12188	67.49	0.978	No, M>Mu
SLU 39	13.55	-341	69.88	0	0	0	No, e>l/2
SLU 37	11.45	-530	-63.18	12416	68.52	1.085	Si
SLU 37	13.55	-350	64.11	0	0	0	No, e>l/2
SLU 42	11.45	-519	-69.44	12153	67.33	0.97	No, M>Mu
SLU 42	13.55	-339	70.36	0	0	0	No, e>l/2

Verifica a pressoflessione nel piano secondo D.M. 17-01-18 NTC §7.8.2.2.1 in combinazioni sismiche, γM = 2

Comb.	Quota	N	M	σ0	Mu	c.s.	Verifica
SLV 12	11.45	-577	-139.16	0	0	0	No, e>l/2
SLV 12	13.55	-399	134.26	0	0	0	No, e>l/2
SLV 1	11.45	-99	97.86	0	0	0	No, e>l/2
SLV 1	13.55	66	-72.85	0	0	0	No, Trazione
SLV 4	11.45	-39	61.04	0	0	0	No, e>l/2
SLV 4	13.55	127	-34.86	0	0	0	No, Trazione
SLV 3	11.45	-39	61.04	0	0	0	No, e>l/2
SLV 3	13.55	127	-34.86	0	0	0	No, Trazione
SLV 5	11.45	-495	56.14	11597	68.35	1.217	Si
SLV 5	13.55	-326	-49.95	0	0	0	No, e>l/2
SLV 6	11.45	-495	56.14	11597	68.35	1.217	Si
SLV 6	13.55	-326	-49.95	0	0	0	No, e>l/2
SLV 11	11.45	-577	-139.16	0	0	0	No, e>l/2
SLV 11	13.55	-399	134.26	0	0	0	No, e>l/2
SLV 7	11.45	-297	-66.58	0	0	0	No, e>l/2
SLV 7	13.55	-123	76.65	0	0	0	No, e>l/2
SLV 2	11.45	-99	97.86	0	0	0	No, e>l/2
SLV 2	13.55	66	-72.85	0	0	0	No, Trazione
SLV 8	11.45	-297	-66.58	0	0	0	No, e>l/2
SLV 8	13.55	-123	76.65	0	0	0	No, e>l/2

Verifica a taglio nel piano secondo D.M. 17-01-18 (N.T.C.) §7.8.2.2.2 con rottura per scorrimento in combinazioni non sismiche, γM = 3

Comb.	Quota	N	V par	M	σ0	σN	l'	fvd	Vt scorr.	Vt fess.diag.	Vt,lim	c.s.	Verifica
SLU 19	11.45	-495	-53	-55.29		28835	0.1227	9400	162			3.05	Si
SLU 19	13.55	-324	-53	55.98		0	0	5556	0			0	No, Vu<V
SLU 41	11.45	-519	-67	-69.41		65917	0.0562	10833	85			1.28	Si
SLU 41	13.55	-339	-67	70.33		0	0	5556	0			0	No, Vu<V
SLU 38	11.45	-530	-61	-63.2		37937	0.0998	10614	148			2.45	Si
SLU 38	13.55	-350	-61	64.13		0	0	5556	0			0	No, Vu<V
SLU 42	11.45	-519	-67	-69.44		66138	0.056	10833	85			1.28	Si
SLU 42	13.55	-339	-67	70.36		0	0	5556	0			0	No, Vu<V
SLU 34	11.45	-532	-60	-62.83		36904	0.1029	10476	151			2.5	Si
SLU 34	13.55	-352	-60	63.71		0	0	5556	0			0	No, Vu<V
SLU 39	11.45	-520	-66	-69.02		62354	0.0596	10833	90			1.37	Si
SLU 39	13.55	-341	-66	69.88		0	0	5556	0			0	No, Vu<V
SLU 31	11.45	-533	-60	-62.43		35897	0.106	10342	154			2.57	Si
SLU 31	13.55	-353	-60	63.26		0	0	5556	0			0	No, Vu<V
SLU 37	11.45	-530	-61	-63.18		37869	0.1	10605	148			2.45	Si
SLU 37	13.55	-350	-61	64.11		0	0	5556	0			0	No, Vu<V
SLU 21	11.45	-494	-53	-55.68		29562	0.1194	9497	159			2.97	Si
SLU 21	13.55	-323	-53	56.43		0	0	5556	0			0	No, Vu<V
SLU 20	11.45	-494	-53	-55.65		29516	0.1196	9491	159			2.98	Si
SLU 20	13.55	-323	-53	56.4		0	0	5556	0			0	No, Vu<V

Verifica a taglio nel piano secondo D.M. 17-01-18 (N.T.C.) §7.8.2.2.2 con rottura per scorrimento in combinazioni sismiche, γM = 2

Comb.	Quota	N	V par	M	σ0	σN	l'	fvd	Vt scorr.	Vt fess.diag.	Vt,lim	c.s.	Verifica
SLV 6	11.45	-495	57	56.14		30137	0.1174	14361	236			4.14	Si
SLV 6	13.55	-326	36	-49.95		0	0	8333	0			0	No, Vu<V
SLV 1	11.45	-99	109	97.86		0	0	8333	0			0	No, Vu<V
SLV 1	13.55	66	42	-72.85		0	0	8333	0			0	No, Vu<V
SLV 11	11.45	-577	-137	-139.16		0	0	8333	0			0	No, Vu<V
SLV 11	13.55	-399	-116	134.26		0	0	8333	0			0	No, Vu<V
SLV 12	11.45	-577	-137	-139.16		0	0	8333	0			0	No, Vu<V
SLV 12	13.55	-399	-116	134.26		0	0	8333	0			0	No, Vu<V
SLV 4	11.45	-39	75	61.04		0	0	8333	0			0	No, Vu<V
SLV 4	13.55	127	8	-34.86		0	0	8333	0			0	No, Vu<V
SLV 2	11.45	-99	109	97.86		0	0	8333	0			0	No, Vu<V
SLV 2	13.55	66	42	-72.85		0	0	8333	0			0	No, Vu<V
SLV 3	11.45	-39	75	61.04		0	0	8333	0			0	No, Vu<V
SLV 3	13.55	127	8	-34.86		0	0	8333	0			0	No, Vu<V
SLV 5	11.45	-495	57	56.14		30137	0.1174	14361	236			4.14	Si
SLV 5	13.55	-326	36	-49.95		0	0	8333	0			0	No, Vu<V
SLV 7	11.45	-297	-58	-66.58		0	0	8333	0			0	No, Vu<V
SLV 7	13.55	-123	-77	76.65		0	0	8333	0			0	No, Vu<V
SLV 8	11.45	-297	-58	-66.58		0	0	8333	0			0	No, Vu<V
SLV 8	13.55	-123	-77	76.65		0	0	8333	0			0	No, Vu<V

Verifica a pressoflessione fuori piano D.M. 17-01-18 (N.T.C.)

quota 13.025 Wa 0.03 denominatore 8 γM = 2

Comb.	fd	Sa	σ0	N	M	Mc	Coeff.s.	Verifica
SLV 3	143750	0.52	0	103	18.21	0	0	No, Trazione
SLV 2	143750	0.52	0	44	18.21	0	0	No, Trazione
SLV 4	143750	0.52	0	103	18.21	0	0	No, Trazione
SLV 8	143750	0.52	0	-157	18.21	0	0	No, e>t/2
SLV 1	143750	0.52	0	44	18.21	0	0	No, Trazione
SLV 7	143750	0.52	0	-157	18.21	0	0	No, e>t/2
SLV 5	143750	0.52	8336	-356	18.21	23.22	1.27	Si
SLV 6	143750	0.52	8336	-356	18.21	23.22	1.27	Si
SLV 11	143750	0.52	10302	-440	18.21	28.2	1.55	Si
SLV 12	143750	0.52	10302	-440	18.21	28.2	1.55	Si

Verifica dei meccanismi locali di collasso con analisi cinematica lineare

forza di aggancio al piano = 0 quota mezzeria = 13.025 Wa = 0.03 Ta = 0.1184

Comb.	N top	N base	V orto	α0	M*	e*	a0*	aLim	Verifica
SLV 2	-54	-99	-3	0.019	27.3	0.904	0.29921	21.1064	No
SLV 1	-54	-99	-3	0.019	27.3	0.904	0.29921	21.1064	No
SLV 15	-81	-974	3	0.019	29.4	0.893	0.31132	21.1064	No
SLV 16	-81	-974	3	0.019	29.4	0.893	0.31132	21.1064	No

Comb.	N top	N base	V orto	α0	M*	e*	a0*	aLim	Verifica
SLV 3	-53	-39	-3	0.022	27.2	0.904	0.34997	21.1064	No
SLV 4	-53	-39	-3	0.022	27.2	0.904	0.34997	21.1064	No
SLV 14	-83	-1033	3	0.022	29.5	0.892	0.35618	21.1064	No
SLV 13	-83	-1033	3	0.022	29.5	0.892	0.35618	21.1064	No
SLV 11	-70	-577	2	0.027	28.5	0.896	0.43292	20.8876	No
SLV 12	-70	-577	2	0.027	28.5	0.896	0.43292	20.8876	No

Tabella dei coefficienti di sicurezza minimi

Stato limite	Coeff.s.	Comb.	Verifica
PF_SLU	0	SLU 18	No
V_SLU	0	SLU 18	No
PF_SLV	0	SLV 4	No
V_SLV	0	SLV 1	No
PFFP_SLV	0	SLV 4	No
R_SLV	0.014	SLV 1	No

Maschio 251

Verifiche condotte secondo D.M. 17-01-18 (N.T.C.)

Dati geometrici

X ini.	Y ini.	X fin.	Y fin.	Quota i.	Quota.s	l	Sp.	h netta	h ini.	h fin.	a	a.s.,sx	a.s.,dx
-9.746	3.334	-9.988	3.334	L6	L7	0.242	0.14	3.15	3.15	3.15			

Caratteristiche del materiale

(Circolare 7 21-01-19 C8.5.I) Muratura in mattoni pieni e malta di calce LC2_Corti

fb	fk	fvk0	fmedio	τ0	fv0	μ	ϕ	fv,lim	E	G	FC
600000			345000	9000	20000	0.58	0.77	32500	320000000	128000000	1.2

Verifica a pressoflessione nel piano secondo D.M. 17-01-18 NTC §7.8.2.2.1 in combinazioni non sismiche, γM = 3

Comb.	Quota	N	M	σ0	Mu	c.s.	Verifica
SLU 60	11.45	219	-48.09	0	0	0	No, Trazione
SLU 60	13.55	-708	51.01	20908	63.66	1.248	Si
SLU 61	11.45	219	-48.11	0	0	0	No, Trazione
SLU 61	13.55	-708	51.04	20914	63.67	1.248	Si
SLU 56	11.45	190	-48	0	0	0	No, Trazione
SLU 56	13.55	-753	52.04	22248	66.24	1.273	Si
SLU 58	11.45	165	-43.11	0	0	0	No, Trazione
SLU 58	13.55	-658	45.8	19424	60.59	1.323	Si
SLU 55	11.45	157	-42.66	0	0	0	No, Trazione
SLU 55	13.55	-654	45.64	19324	60.38	1.323	Si
SLU 53	11.45	182	-47.52	0	0	0	No, Trazione
SLU 53	13.55	-750	51.83	22139	66.04	1.274	Si
SLU 57	11.45	191	-48.03	0	0	0	No, Trazione
SLU 57	13.55	-754	52.06	22254	66.25	1.273	Si
SLU 59	11.45	166	-43.13	0	0	0	No, Trazione
SLU 59	13.55	-658	45.83	19430	60.6	1.322	Si
SLU 54	11.45	182	-47.54	0	0	0	No, Trazione
SLU 54	13.55	-750	51.85	22145	66.05	1.274	Si
SLU 1	11.45	20	-24.91	0	0	0	No, Trazione
SLU 1	13.55	-432	27.92	12762	44.08	1.579	Si

Verifica a pressoflessione nel piano secondo D.M. 17-01-18 NTC §7.8.2.2.1 in combinazioni sismiche, γM = 2

Comb.	Quota	N	M	σ0	Mu	c.s.	Verifica
SLV 12	11.45	1140	-116.26	0	0	0	No, Trazione
SLV 12	13.55	-1134	96.01	33472	99.55	1.037	Si
SLV 1	11.45	-844	94.31	24927	81.27	0.862	No, M>Mu
SLV 1	13.55	207	-6.1	0	0	0	No, Trazione
SLV 4	11.45	-347	64.02	0	0	0	No, e>l/2
SLV 4	13.55	-63	25.96	0	0	0	No, e>l/2
SLV 3	11.45	-347	64.02	0	0	0	No, e>l/2
SLV 3	13.55	-63	25.96	0	0	0	No, e>l/2
SLV 7	11.45	722	-49.36	0	0	0	No, Trazione
SLV 7	13.55	-785	80.94	23180	76.94	0.95	No, M>Mu
SLV 5	11.45	-936	51.61	27640	87.61	1.697	Si
SLV 5	13.55	116	-25.94	0	0	0	No, Trazione
SLV 11	11.45	1140	-116.26	0	0	0	No, Trazione
SLV 11	13.55	-1134	96.01	33472	99.55	1.037	Si
SLV 8	11.45	722	-49.36	0	0	0	No, Trazione
SLV 8	13.55	-785	80.94	23180	76.94	0.95	No, M>Mu
SLV 6	11.45	-936	51.61	27640	87.61	1.697	Si
SLV 6	13.55	116	-25.94	0	0	0	No, Trazione
SLV 2	11.45	-844	94.31	24927	81.27	0.862	No, M>Mu
SLV 2	13.55	207	-6.1	0	0	0	No, Trazione

Verifica a taglio nel piano secondo D.M. 17-01-18 (N.T.C.) §7.8.2.2.2 con rottura per scorrimento in combinazioni non sismiche, γM = 3

Comb.	Quota	N	V par	M	σ0	σN	l'	fvd	Vt scorr.	Vt fess.diag.	Vt,lim	c.s.	Verifica
SLU 60	11.45	219	-111	-48.09		0	0	5556	0			0	No, Vu<V
SLU 60	13.55	-708	-111	51.01		34474	0.1467	10152	209			1.88	Si
SLU 61	11.45	219	-111	-48.11		0	0	5556	0			0	No, Vu<V
SLU 61	13.55	-708	-111	51.04		34493	0.1467	10155	209			1.88	Si
SLU 55	11.45	157	-99	-42.66		0	0	5556	0			0	No, Vu<V
SLU 55	13.55	-654	-99	45.64		30424	0.1536	9612	207			2.08	Si
SLU 59	11.45	166	-100	-43.13		0	0	5556	0			0	No, Vu<V
SLU 59	13.55	-658	-100	45.83		30539	0.1539	9627	207			2.07	Si
SLU 54	11.45	182	-111	-47.54		0	0	5556	0			0	No, Vu<V
SLU 54	13.55	-750	-112	51.85		34466	0.1554	10151	221			1.98	Si

Comb.	Quota	N	V par	M	σ0	σN	l'	fvd	Vt scorr.	Vt fess.diag.	Vt,lim	c.s.	Verifica
SLU 57	11.45	191	-113	-48.03		0	0	5556	0			0	No, Vu<V
SLU 57	13.55	-754	-113	52.06		34594	0.1556	10168	222			1.97	Si
SLU 56	11.45	190	-112	-48		0	0	5556	0			0	No, Vu<V
SLU 56	13.55	-753	-112	52.04		34576	0.1557	10166	222			1.97	Si
SLU 53	11.45	182	-111	-47.52		0	0	5556	0			0	No, Vu<V
SLU 53	13.55	-750	-111	51.83		34448	0.1555	10149	221			1.98	Si
SLU 58	11.45	165	-100	-43.11		0	0	5556	0			0	No, Vu<V
SLU 58	13.55	-658	-100	45.8		30520	0.1539	9625	207			2.07	Si
SLU 1	11.45	20	-59	-24.91		0	0	5556	0			0	No, Vu<V
SLU 1	13.55	-432	-59	27.92		18264	0.169	7991	189			3.19	Si

Verifica a taglio nel piano secondo D.M. 17-01-18 (N.T.C.) §7.8.2.2.2 con rottura per scorrimento in combinazioni sismiche, γM = 2

Comb.	Quota	N	V par	M	σ0	σN	l'	fvd	Vt scorr.	Vt fess.diag.	Vt,lim	c.s.	Verifica
SLV 6	11.45	-936	127	51.61		33864	0.1974	15106	418			3.28	Si
SLV 6	13.55	116	9	-25.94		0	0	8333	0			0	No, Vu<V
SLV 12	11.45	1140	-278	-116.26		0	0	8333	0			0	No, Vu<V
SLV 12	13.55	-1134	-160	96.01		74445	0.1088	16250	247			1.55	Si
SLV 4	11.45	-347	143	64.02		0	0	8333	0			0	No, Vu<V
SLV 4	13.55	-63	-267	25.96		0	0	8333	0			0	No, Vu<V
SLV 1	11.45	-844	218	94.31		217751	0.0277	16250	63			0.29	No, Vu<V
SLV 1	13.55	207	-189	-6.1		0	0	8333	0			0	No, Vu<V
SLV 2	11.45	-844	218	94.31		217751	0.0277	16250	63			0.29	No, Vu<V
SLV 2	13.55	207	-189	-6.1		0	0	8333	0			0	No, Vu<V
SLV 3	11.45	-347	143	64.02		0	0	8333	0			0	No, Vu<V
SLV 3	13.55	-63	-267	25.96		0	0	8333	0			0	No, Vu<V
SLV 8	11.45	722	-125	-49.36		0	0	8333	0			0	No, Vu<V
SLV 8	13.55	-785	-252	80.94		104771	0.0535	16250	122			0.48	No, Vu<V
SLV 11	11.45	1140	-278	-116.26		0	0	8333	0			0	No, Vu<V
SLV 11	13.55	-1134	-160	96.01		74445	0.1088	16250	247			1.55	Si
SLV 7	11.45	722	-125	-49.36		0	0	8333	0			0	No, Vu<V
SLV 7	13.55	-785	-252	80.94		104771	0.0535	16250	122			0.48	No, Vu<V
SLV 5	11.45	-936	127	51.61		33864	0.1974	15106	418			3.28	Si
SLV 5	13.55	116	9	-25.94		0	0	8333	0			0	No, Vu<V

Verifica a pressoflessione fuori piano D.M. 17-01-18 (N.T.C.)

quota 13.025 Wa 0.03 denominatore 8 γM = 2

Comb.	fd	Sa	σ0	N	M	Mc	Coeff.s.	Verifica
SLV 1	143750	0.52	0	261	14.44	0	0	No, Trazione
SLV 3	143750	0.52	0	185	14.44	0	0	No, Trazione
SLV 2	143750	0.52	0	261	14.44	0	0	No, Trazione
SLV 5	143750	0.52	0	-50	14.44	0	0	No, e>t/2
SLV 4	143750	0.52	0	185	14.44	0	0	No, Trazione
SLV 6	143750	0.52	0	-50	14.44	0	0	No, e>t/2
SLV 8	143750	0.52	8946	-303	14.44	19.65	1.36	Si
SLV 7	143750	0.52	8946	-303	14.44	19.65	1.36	Si
SLV 9	143750	0.52	11591	-393	14.44	24.87	1.72	Si
SLV 10	143750	0.52	11591	-393	14.44	24.87	1.72	Si

Verifica dei meccanismi locali di collasso con analisi cinematica lineare

forza di aggancio al piano = 0 quota mezzeria = 13.025 Wa = 0.03 Ta = 0.1184

Comb.	N top	N base	V orto	α0	M*	e*	a0*	aLim	Verifica
SLV 13	-17	551	-1	0	0	0	0	21.1064	No, Trazione
SLV 16	-18	1048	-2	0	0	0	0	21.1064	No, Trazione
SLV 14	-17	551	-1	0	0	0	0	21.1064	No, Trazione
SLV 11	-27	1140	-2	0	0	0	0	20.8876	No, Trazione
SLV 7	-34	722	-1	0	0	0	0	20.8876	No, Trazione
SLV 8	-34	722	-1	0	0	0	0	20.8876	No, Trazione
SLV 12	-27	1140	-2	0	0	0	0	20.8876	No, Trazione
SLV 15	-18	1048	-2	0	0	0	0	21.1064	No, Trazione
SLV 1	-40	-844	2	0.022	21.4	0.906	0.34768	21.1064	No
SLV 2	-40	-844	2	0.022	21.4	0.906	0.34768	21.1064	No

Tabella dei coefficienti di sicurezza minimi

Stato limite	Coeff.s.	Comb.	Verifica
PF_SLU	0	SLU 84	No
V_SLU	0	SLU 1	No
PF_SLV	0	SLV 16	No
V_SLV	0	SLV 1	No
PFFP_SLV	0	SLV 4	No
R_SLV	0	SLV 16	No

Maschio 252

Verifiche condotte secondo D.M. 17-01-18 (N.T.C.)

Dati geometrici

X ini.	Y ini.	X fin.	Y fin.	Quota i.	Quota.s	l	Sp.	h netta	h ini.	h fin.	a	a.s.,sx	a.s.,dx
-19.687	6.536	-17.796	6.536	L6	L7	1.892	0.28	3.15	3.15	3.15			

Caratteristiche del materiale

(Circolare 7 21-01-19 C8.5.I) Muratura in mattoni pieni e malta di calce LC2_Corti

fb	fk	fvk0	fmedio	τ0	fv0	μ	ϕ	fv,lim	E	G	FC
600000			345000	9000	20000	0.58	0.77	32500	320000000	128000000	1.2

Verifica a pressoflessione nel piano secondo D.M. 17-01-18 NTC §7.8.2.2.1 in combinazioni non sismiche, γM = 3

Comb.	Quota	N	M	σ0	Mu	c.s.	Verifica
SLU 17	12.35	-4255	-366.4	8033	3627.63	9.901	Si
SLU 17	14.25	-2686	1127.02	5071	2382.16	2.114	Si
SLU 8	12.35	-4390	-293.03	8288	3729.46	12.727	Si
SLU 8	14.25	-2676	1113.94	5052	2374.01	2.131	Si
SLU 80	12.35	-5418	-443.49	10228	4480.75	10.103	Si
SLU 80	14.25	-3402	1375.86	6423	2963.96	2.154	Si
SLU 9	12.35	-4401	-278.41	8308	3737.67	13.425	Si
SLU 9	14.25	-2687	1112.54	5072	2382.86	2.142	Si
SLU 37	12.35	-4386	-465.71	8281	3726.89	8.003	Si
SLU 37	14.25	-2906	1246.84	5486	2563.2	2.056	Si
SLU 30	12.35	-4543	-363.1	8577	3844.24	10.587	Si
SLU 30	14.25	-2917	1230.96	5508	2572.64	2.09	Si
SLU 29	12.35	-4532	-377.71	8556	3836.09	10.156	Si
SLU 29	14.25	-2907	1232.36	5488	2563.9	2.08	Si
SLU 38	12.35	-4397	-451.09	8302	3735.11	8.28	Si
SLU 38	14.25	-2916	1245.44	5506	2571.94	2.065	Si
SLU 79	12.35	-5407	-458.11	10208	4473.03	9.764	Si
SLU 79	14.25	-3391	1377.26	6403	2955.44	2.146	Si
SLU 16	12.35	-4244	-381.02	8013	3619.35	9.499	Si
SLU 16	14.25	-2675	1128.42	5051	2373.3	2.103	Si

Verifica a pressoflessione nel piano secondo D.M. 17-01-18 NTC §7.8.2.2.1 in combinazioni sismiche, γM = 2

Comb.	Quota	N	M	σ0	Mu	c.s.	Verifica
SLV 7	12.35	-115	-393.93	0	0	0	No, e>l/2
SLV 7	14.25	-1245	1866.08	0	0	0	No, e>l/2
SLV 2	12.35	-3031	-2000.75	5723	2732.66	1.366	Si
SLV 2	14.25	-2541	1045.14	4797	2308.85	2.209	Si
SLV 8	12.35	-115	-393.93	0	0	0	No, e>l/2
SLV 8	14.25	-1245	1866.08	0	0	0	No, e>l/2
SLV 16	12.35	-4095	1759.16	7731	3628.18	2.062	Si
SLV 16	14.25	-1355	170.93	2558	1254.5	7.339	Si
SLV 11	12.35	-977	686.01	1845	910.33	1.327	Si
SLV 11	14.25	-1035	1417.72	0	0	0	No, e>l/2
SLV 1	12.35	-3031	-2000.75	5723	2732.66	1.366	Si
SLV 1	14.25	-2541	1045.14	4797	2308.85	2.209	Si
SLV 15	12.35	-4095	1759.16	7731	3628.18	2.062	Si
SLV 15	14.25	-1355	170.93	2558	1254.5	7.339	Si
SLV 12	12.35	-977	686.01	1845	910.33	1.327	Si
SLV 12	14.25	-1035	1417.72	0	0	0	No, e>l/2
SLV 3	12.35	-1221	-1840.65	0	0	0	No, e>l/2
SLV 3	14.25	-2056	1665.46	3882	1883.14	1.131	Si
SLV 4	12.35	-1221	-1840.65	0	0	0	No, e>l/2
SLV 4	14.25	-2056	1665.46	3882	1883.14	1.131	Si

Verifica a taglio nel piano secondo D.M. 17-01-18 (N.T.C.) §7.8.2.2.2 con rottura per scorrimento in combinazioni non sismiche, γM = 3

Comb.	Quota	N	V par	M	σ0	σN	l'	fvd	Vt scorr.	Vt fess.diag.	Vt,lim	c.s.	Verifica
SLU 79	12.35	-5407	-1155	-458.11		10208	1.8917	6917	3663			3.17	Si
SLU 79	14.25	-3391	-1227	1377.26		7480	1.6191	6553	2971			2.42	Si
SLU 38	12.35	-4397	-1075	-451.09		8302	1.8917	6662	3529			3.28	Si
SLU 38	14.25	-2916	-1141	1245.44		6692	1.5563	6448	2810			2.46	Si
SLU 37	12.35	-4386	-1083	-465.71		8281	1.8917	6660	3527			3.26	Si
SLU 37	14.25	-2906	-1150	1246.84		6694	1.5502	6448	2799			2.43	Si
SLU 77	12.35	-5766	-1187	-388.95		10886	1.8917	7007	3711			3.13	Si
SLU 77	14.25	-3801	-1258	1457.88		8048	1.687	6629	3131			2.49	Si
SLU 72	12.35	-5563	-1023	-355.5		10503	1.8917	6956	3684			3.6	Si
SLU 72	14.25	-3403	-1090	1361.38		7423	1.6373	6545	3001			2.75	Si
SLU 35	12.35	-4746	-1115	-396.54		8960	1.8917	6750	3575			3.21	Si
SLU 35	14.25	-3316	-1180	1327.46		7236	1.6365	6520	2988			2.53	Si
SLU 36	12.35	-4757	-1106	-381.93		8980	1.8917	6753	3577			3.23	Si
SLU 36	14.25	-3327	-1172	1326.06		7237	1.6416	6521	2997			2.56	Si
SLU 80	12.35	-5418	-1147	-443.49		10228	1.8917	6919	3665			3.2	Si
SLU 80	14.25	-3402	-1219	1375.86		7481	1.6242	6553	2980			2.45	Si
SLU 71	12.35	-5552	-1032	-370.12		10483	1.8917	6953	3683			3.57	Si
SLU 71	14.25	-3392	-1099	1362.78		7422	1.6322	6545	2991			2.72	Si
SLU 78	12.35	-5777	-1179	-374.33		10907	1.8917	7010	3713			3.15	Si
SLU 78	14.25	-3812	-1250	1456.48		8050	1.6913	6629	3139			2.51	Si

Verifica a taglio nel piano secondo D.M. 17-01-18 (N.T.C.) §7.8.2.2.2 con rottura per scorrimento in combinazioni sismiche, γM = 2

Comb.	Quota	N	V par	M	σ0	σN	l'	fvd	Vt scorr.	Vt fess.diag.	Vt,lim	c.s.	Verifica
SLV 2	12.35	-3031	-2537	-2000.75		12628	0.8573	10859	2607			1.03	Si
SLV 2	14.25	-2541	-2665	1045.14		5659	1.6035	9465	4250			1.59	Si
SLV 3	12.35	-1221	-3206	-1840.65		0	0	8333	0			0	No, Vu<V
SLV 3	14.25	-2056	-3192	1665.46		18012	0.4077	11936	1363			0.43	No, Vu<V
SLV 8	12.35	-115	-2331	-393.93		0	0	8333	0			0	No, Vu<V
SLV 8	14.25	-1245	-2134	1866.08		0	0	8333	0			0	No, Vu<V
SLV 1	12.35	-3031	-2537	-2000.75		12628	0.8573	10859	2607			1.03	Si
SLV 1	14.25	-2541	-2665	1045.14		5659	1.6035	9465	4250			1.59	Si
SLV 14	12.35	-5905	2196	1599.05		11149	1.8917	10563	5595			2.55	Si
SLV 14	14.25	-1839	2119	-449.39		3472	1.8917	9028	4782			2.26	Si
SLV 11	12.35	-977	-911	686.01		4771	0.7315	9288	1902			2.09	Si
SLV 11	14.25	-1035	-699	1417.72		0	0	8333	0			0	No, Vu<V
SLV 12	12.35	-977	-911	686.01		4771	0.7315	9288	1902			2.09	Si
SLV 12	14.25	-1035	-699	1417.72		0	0	8333	0			0	No, Vu<V
SLV 7	12.35	-115	-2331	-393.93		0	0	8333	0			0	No, Vu<V
SLV 7	14.25	-1245	-2134	1866.08		0	0	8333	0			0	No, Vu<V
SLV 13	12.35	-5905	2196	1599.05		11149	1.8917	10563	5595			2.55	Si
SLV 13	14.25	-1839	2119	-449.39		3472	1.8917	9028	4782			2.26	Si
SLV 4	12.35	-1221	-3206	-1840.65		0	0	8333	0			0	No, Vu<V
SLV 4	14.25	-2056	-3192	1665.46		18012	0.4077	11936	1363			0.43	No, Vu<V

Verifica a pressoflessione fuori piano D.M. 17-01-18 (N.T.C.)

quota 13.025 Wa 0.05 denominatore 8 γM = 2

Comb.	fd	Sa	σ0	N	M	Mc	Coeff.s.	Verifica
SLV 12	143750	0.52	0	-680	211.18	0	0	No, e>t/2
SLV 3	143750	0.52	0	-978	211.18	0	0	No, e>t/2
SLV 8	143750	0.52	0	14	211.18	0	0	No, Trazione
SLV 4	143750	0.52	0	-978	211.18	0	0	No, e>t/2
SLV 11	143750	0.52	0	-680	211.18	0	0	No, e>t/2
SLV 7	143750	0.52	0	14	211.18	0	0	No, Trazione
SLV 2	143750	0.52	4766	-2524	211.18	339.61	1.61	Si
SLV 1	143750	0.52	4766	-2524	211.18	339.61	1.61	Si
SLV 15	143750	0.52	6219	-3294	211.18	437.71	2.07	Si
SLV 16	143750	0.52	6219	-3294	211.18	437.71	2.07	Si

Verifica dei meccanismi locali di collasso con analisi cinematica lineare

forza di aggancio al piano = 0 quota mezzeria = 13.025 Wa = 0.05 Ta = 0.0592

Comb.	N top	N base	V orto	α0	M*	e*	a0*	aLim	Verifica
SLV 11	-445	-1100	-257	0	323	0.919	0	10.02695	No
SLV 7	-342	-634	-541	0	317.1	0.93	0	10.02695	No
SLV 4	-742	-2326	-403	0	343.7	0.9	0	11.09238	No
SLV 8	-342	-634	-541	0	317.1	0.93	0	10.02695	No
SLV 9	-1929	-7489	1086	0	447.7	0.89	0	10.02695	No
SLV 6	-1826	-7022	801	0	438.1	0.89	0	10.02695	No
SLV 10	-1929	-7489	1086	0	447.7	0.89	0	10.02695	No
SLV 3	-742	-2326	-403	0	343.7	0.9	0	11.09238	No
SLV 5	-1826	-7022	801	0	438.1	0.89	0	10.02695	No
SLV 12	-445	-1100	-257	0	323	0.919	0	10.02695	No

Tabella dei coefficienti di sicurezza minimi

Stato limite	Coeff.s.	Comb.	Verifica
PF_SLU	2.056	SLU 37	Si
V_SLU	2.421	SLU 79	Si
PF_SLV	0	SLV 3	No
V_SLV	0	SLV 3	No
PFFP_SLV	0	SLV 8	No
R_SLV	0	SLV 3	No

Maschio 253

Verifiche condotte secondo D.M. 17-01-18 (N.T.C.)

Dati geometrici

X ini.	Y ini.	X fin.	Y fin.	Quota i.	Quota.s	l	Sp.	h netta	h ini.	h fin.	a	a.s.,sx	a.s.,dx
-16.796	6.536	-12.901	6.536	L6	L7	3.895	0.28	3.15	3.15	3.15			

Caratteristiche del materiale

(Circolare 7 21-01-19 C8.5.I) Muratura in mattoni pieni e malta di calce LC2_Corti

fb	fk	fvk0	fmedio	τ0	fv0	μ	ϕ	fv,lim	E	G	FC
600000			345000	9000	20000	0.58	0.77	32500	320000000	128000000	1.2

Verifica a pressoflessione nel piano secondo D.M. 17-01-18 NTC §7.8.2.2.1 in combinazioni non sismiche, γM = 3

Comb.	Quota	N	M	σ0	Mu	c.s.	Verifica
SLU 4	12.35	-10119	-532.84	9278	17461.88	32.771	Si
SLU 4	14.25	-7105	-1061.03	6515	12730.06	11.998	Si
SLU 69	12.35	-14596	-812.34	13383	23754.78	29.242	Si
SLU 69	14.25	-10922	-1588.26	10015	18655.18	11.746	Si
SLU 49	12.35	-13932	-835.41	12774	22877.16	27.384	Si
SLU 49	14.25	-10183	-1493.59	9337	17558.76	11.756	Si
SLU 7	12.35	-11761	-753.52	10784	19872.63	26.373	Si
SLU 7	14.25	-9033	-1353.96	8283	15803.3	11.672	Si
SLU 6	12.35	-11761	-753.26	10784	19872.7	26.382	Si
SLU 6	14.25	-9035	-1351.39	8284	15805.6	11.696	Si
SLU 48	12.35	-13932	-835.15	12775	22877.22	27.393	Si
SLU 48	14.25	-10185	-1491.03	9339	17560.99	11.778	Si
SLU 36	12.35	-12338	-569.99	11313	20691.42	36.301	Si
SLU 36	14.25	-9760	-1411.51	8949	16919.38	11.987	Si
SLU 70	12.35	-14596	-812.6	13383	23754.72	29.233	Si
SLU 70	14.25	-10920	-1590.83	10013	18652.99	11.725	Si
SLU 27	12.35	-12425	-730.45	11393	20813.43	28.494	Si
SLU 27	14.25	-9772	-1448.62	8960	16936.95	11.692	Si
SLU 28	12.35	-12425	-730.71	11393	20813.36	28.484	Si
SLU 28	14.25	-9770	-1451.19	8959	16934.69	11.67	Si

Verifica a pressoflessione nel piano secondo D.M. 17-01-18 NTC §7.8.2.2.1 in combinazioni sismiche, γM = 2

Comb.	Quota	N	M	σ0	Mu	c.s.	Verifica
SLV 10	12.35	-4987	571.76	4573	9349.39	16.352	Si
SLV 10	14.25	-5572	-4340.48	5109	10397.87	2.396	Si
SLV 8	12.35	-11329	-960.7	10388	20188.15	21.014	Si
SLV 8	14.25	-4196	3154.42	3847	7913.68	2.509	Si
SLV 6	12.35	-5221	-2509.64	4788	9770.05	3.893	Si
SLV 6	14.25	-5135	-3232.71	4708	9614.73	2.974	Si
SLV 14	12.35	-6852	4708.87	6283	12658.66	2.688	Si
SLV 14	14.25	-5753	-3397.39	5276	10721.12	3.156	Si
SLV 9	12.35	-4987	571.76	4573	9349.39	16.352	Si
SLV 9	14.25	-5572	-4340.48	5109	10397.87	2.396	Si
SLV 5	12.35	-5221	-2509.64	4788	9770.05	3.893	Si
SLV 5	14.25	-5135	-3232.71	4708	9614.73	2.974	Si

Comb.	Quota	N	M	σ0	Mu	c.s.	Verifica
SLV 1	12.35	-7632	-5562.49	6998	14012.12	2.519	Si
SLV 1	14.25	-4296	295.19	3939	8096.68	27.429	Si
SLV 2	12.35	-7632	-5562.49	6998	14012.12	2.519	Si
SLV 2	14.25	-4296	295.19	3939	8096.68	27.429	Si
SLV 13	12.35	-6852	4708.87	6283	12658.66	2.688	Si
SLV 13	14.25	-5753	-3397.39	5276	10721.12	3.156	Si
SLV 7	12.35	-11329	-960.7	10388	20188.15	21.014	Si
SLV 7	14.25	-4196	3154.42	3847	7913.68	2.509	Si

Verifica a taglio nel piano secondo D.M. 17-01-18 (N.T.C.) §7.8.2.2.2 con rottura per scorrimento in combinazioni non sismiche, γM = 3

Comb.	Quota	N	V par	M	σ0	σN	l'	fvd	Vt scorr.	Vt fess.diag.	Vt,lim	c.s.	Verifica
SLU 32	12.35	-10696	298	-349.06		9807	3.895	6863	7485			25.14	Si
SLU 32	14.25	-7833	298	-1116.02		7182	3.895	6513	7103			23.87	Si
SLU 74	12.35	-12866	316	-430.95		11798	3.895	7129	7774			24.58	Si
SLU 74	14.25	-8983	316	-1255.66		8237	3.895	6654	7257			22.95	Si
SLU 78	12.35	-14509	327	-651.88		13303	3.895	7329	7993			24.43	Si
SLU 78	14.25	-10910	327	-1551.15		10004	3.895	6889	7514			22.97	Si
SLU 36	12.35	-12338	309	-569.99		11313	3.895	7064	7704			24.97	Si
SLU 36	14.25	-9760	308	-1411.51		8949	3.895	6749	7360			23.86	Si
SLU 82	12.35	-10704	269	-76.65		9815	3.895	6864	7486			27.84	Si
SLU 82	14.25	-6547	269	-759.34		6004	3.895	6356	6932			25.81	Si
SLU 77	12.35	-14509	326	-651.63		13304	3.895	7329	7993			24.53	Si
SLU 77	14.25	-10912	326	-1548.58		10005	3.895	6890	7514			23.07	Si
SLU 33	12.35	-10696	299	-349.32		9807	3.895	6863	7485			25.03	Si
SLU 33	14.25	-7832	299	-1118.59		7181	3.895	6513	7103			23.76	Si
SLU 75	12.35	-12866	318	-431.21		11798	3.895	7129	7774			24.47	Si
SLU 75	14.25	-8982	318	-1258.23		8236	3.895	6654	7256			22.85	Si
SLU 35	12.35	-12338	307	-569.73		11313	3.895	7064	7704			25.08	Si
SLU 35	14.25	-9762	307	-1408.95		8951	3.895	6749	7360			23.97	Si
SLU 84	12.35	-12346	278	-297.32		11321	3.895	7065	7705			27.68	Si
SLU 84	14.25	-8476	278	-1052.26		7772	3.895	6592	7189			25.84	Si

Verifica a taglio nel piano secondo D.M. 17-01-18 (N.T.C.) §7.8.2.2.2 con rottura per scorrimento in combinazioni sismiche, γM = 2

Comb.	Quota	N	V par	M	σ0	σN	l'	fvd	Vt scorr.	Vt fess.diag.	Vt,lim	c.s.	Verifica
SLV 4	12.35	-9464	-3710	-5097.8		8678	3.895	10069	10981			2.96	Si
SLV 4	14.25	-4014	-948	2211.33		3681	3.895	9069	9891			10.43	Si
SLV 14	12.35	-6852	4009	4708.87		6473	3.7809	9628	10193			2.54	Si
SLV 14	14.25	-5753	1246	-3397.39		5276	3.895	9388	10239			8.22	Si
SLV 12	12.35	-11096	2751	2120.71		10174	3.895	10368	11307			4.11	Si
SLV 12	14.25	-4633	2326	2046.65		4248	3.895	9183	10015			4.31	Si
SLV 1	12.35	-7632	-4505	-5562.49		7456	3.656	9824	10057			2.23	Si
SLV 1	14.25	-4296	-1965	295.19		3939	3.895	9121	9948			5.06	Si
SLV 13	12.35	-6852	4009	4708.87		6473	3.7809	9628	10193			2.54	Si
SLV 13	14.25	-5753	1246	-3397.39		5276	3.895	9388	10239			8.22	Si
SLV 16	12.35	-8685	4804	5173.55		7963	3.895	9926	10825			2.25	Si
SLV 16	14.25	-5472	2263	-1481.25		5017	3.895	9337	10183			4.5	Si
SLV 15	12.35	-8685	4804	5173.55		7963	3.895	9926	10825			2.25	Si
SLV 15	14.25	-5472	2263	-1481.25		5017	3.895	9337	10183			4.5	Si
SLV 3	12.35	-9464	-3710	-5097.8		8678	3.895	10069	10981			2.96	Si
SLV 3	14.25	-4014	-948	2211.33		3681	3.895	9069	9891			10.43	Si
SLV 11	12.35	-11096	2751	2120.71		10174	3.895	10368	11307			4.11	Si
SLV 11	14.25	-4633	2326	2046.65		4248	3.895	9183	10015			4.31	Si
SLV 2	12.35	-7632	-4505	-5562.49		7456	3.656	9824	10057			2.23	Si
SLV 2	14.25	-4296	-1965	295.19		3939	3.895	9121	9948			5.06	Si

Verifica a pressoflessione fuori piano D.M. 17-01-18 (N.T.C.)

quota 13.025 Wa 0.05 denominatore 8 γM = 2

Comb.	fd	Sa	σ0	N	M	Mc	Coeff.s.	Verifica
SLV 10	143750	0.52	3938	-4295	434.83	581.89	1.34	Si
SLV 9	143750	0.52	3938	-4295	434.83	581.89	1.34	Si
SLV 6	143750	0.52	4472	-4877	434.83	657.76	1.51	Si
SLV 5	143750	0.52	4472	-4877	434.83	657.76	1.51	Si
SLV 13	143750	0.52	4725	-5153	434.83	693.51	1.59	Si
SLV 14	143750	0.52	4725	-5153	434.83	693.51	1.59	Si
SLV 15	143750	0.52	5933	-6470	434.83	861.87	1.98	Si
SLV 16	143750	0.52	5933	-6470	434.83	861.87	1.98	Si
SLV 1	143750	0.52	6504	-7093	434.83	940.14	2.16	Si
SLV 2	143750	0.52	6504	-7093	434.83	940.14	2.16	Si

Verifica dei meccanismi locali di collasso con analisi cinematica lineare

forza di aggancio al piano = 0 quota mezzeria = 13.025 Wa = 0.05 Ta = 0.0592

Comb.	N top	N base	V orto	α0	M*	e*	a0*	aLim	Verifica
SLV 8	-2030	-12079	-282	0.016	747.8	0.893	0.26438	10.02695	No
SLV 7	-2030	-12079	-282	0.016	747.8	0.893	0.26438	10.02695	No
SLV 11	-1968	-12451	-267	0.019	742.7	0.894	0.30633	10.02695	No
SLV 12	-1968	-12451	-267	0.019	742.7	0.894	0.30633	10.02695	No
SLV 3	-3218	-9306	-271	0.023	851.9	0.889	0.38088	11.09238	No
SLV 4	-3218	-9306	-271	0.023	851.9	0.889	0.38088	11.09238	No
SLV 1	-4175	-7302	-247	0.029	940.9	0.891	0.47981	11.09238	No
SLV 2	-4175	-7302	-247	0.029	940.9	0.891	0.47981	11.09238	No
SLV 16	-3013	-10548	-221	0.031	833.3	0.889	0.50182	11.09238	No
SLV 15	-3013	-10548	-221	0.031	833.3	0.889	0.50182	11.09238	No

Tabella dei coefficienti di sicurezza minimi

Stato limite	Coeff.s.	Comb.	Verifica
PF_SLU	11.67	SLU 28	Si
V_SLU	22.854	SLU 75	Si
PF_SLV	2.396	SLV 9	Si
V_SLV	2.232	SLV 1	Si

Stato limite	Coeff.s.	Comb.	Verifica
PFFP_SLV	1.338	SLV 9	Si
R_SLV	0.026	SLV 7	No

Maschio 254

Verifiche condotte secondo D.M. 17-01-18 (N.T.C.)

Dati geometrici

X ini.	Y ini.	X fin.	Y fin.	Quota i.	Quota.s	l	Sp.	h netta	h ini.	h fin.	a	a.s.,sx	a.s.,dx
-11.901	6.536	-8.007	6.536	L6	L7	3.893	0.28	3.15	3.15	3.15			

Caratteristiche del materiale

(Circolare 7 21-01-19 C8.5.I) Muratura in mattoni pieni e malta di calce LC2_Corti

fb	fk	fvk0	fmedio	τ0	fv0	μ	ϕ	fv,lim	E	G	FC
600000			345000	9000	20000	0.58	0.77	32500	320000000	128000000	1.2

Verifica a pressoflessione nel piano secondo D.M. 17-01-18 NTC §7.8.2.2.1 in combinazioni non sismiche, γM = 3

Comb.	Quota	N	M	σ0	Mu	c.s.	Verifica
SLU 41	12.35	-8997	-1317.2	8253	15738.8	11.949	Si
SLU 41	14.25	-5861	-275	5377	10656.91	38.752	Si
SLU 80	12.35	-12260	-1609.82	11246	20570.2	12.778	Si
SLU 80	14.25	-8231	-441.49	7551	14537.9	32.929	Si
SLU 37	12.35	-10206	-1515.05	9362	17583.76	11.606	Si
SLU 37	14.25	-7223	-473.78	6626	12917.57	27.265	Si
SLU 83	12.35	-11051	-1420.88	10137	18834.66	13.256	Si
SLU 83	14.25	-6870	-241.25	6302	12339.23	51.147	Si
SLU 42	12.35	-8996	-1308.28	8253	15738.25	12.03	Si
SLU 42	14.25	-5860	-276.46	5376	10655.05	38.541	Si
SLU 16	12.35	-9691	-1317.8	8890	16805.83	12.753	Si
SLU 16	14.25	-6675	-415.61	6123	12016.51	28.913	Si
SLU 38	12.35	-10206	-1506.14	9362	17583.22	11.674	Si
SLU 38	14.25	-7222	-475.24	6625	12915.78	27.177	Si
SLU 17	12.35	-9691	-1308.88	8890	16805.29	12.839	Si
SLU 17	14.25	-6674	-417.07	6122	12014.69	28.808	Si
SLU 34	12.35	-9034	-1221.33	8287	15796.34	12.934	Si
SLU 34	14.25	-5869	-262.65	5384	10669.18	40.621	Si
SLU 79	12.35	-12260	-1618.74	11247	20570.71	12.708	Si
SLU 79	14.25	-8232	-440.03	7552	14539.64	33.043	Si

Verifica a pressoflessione nel piano secondo D.M. 17-01-18 NTC §7.8.2.2.1 in combinazioni sismiche, γM = 2

Comb.	Quota	N	M	σ0	Mu	c.s.	Verifica
SLV 15	12.35	-8857	4133.65	8125	16094.98	3.894	Si
SLV 15	14.25	-3555	-2993.88	3261	6735.96	2.25	Si
SLV 12	12.35	-10986	271.62	10078	19621.23	72.237	Si
SLV 12	14.25	-4396	-4278.75	4033	8275.53	1.934	Si
SLV 2	12.35	-6258	-5496.49	5741	11610.11	2.112	Si
SLV 2	14.25	-4726	3032.97	4336	8874.05	2.926	Si
SLV 5	12.35	-4130	-1634.47	3788	7789.73	4.766	Si
SLV 5	14.25	-3885	4317.83	3564	7342.59	1.701	Si
SLV 10	12.35	-4308	1351.79	3952	8115.55	6.004	Si
SLV 10	14.25	-3449	3181.17	3164	6539.41	2.056	Si
SLV 16	12.35	-8857	4133.65	8125	16094.98	3.894	Si
SLV 16	14.25	-3555	-2993.88	3261	6735.96	2.25	Si
SLV 9	12.35	-4308	1351.79	3952	8115.55	6.004	Si
SLV 9	14.25	-3449	3181.17	3164	6539.41	2.056	Si
SLV 6	12.35	-4130	-1634.47	3788	7789.73	4.766	Si
SLV 6	14.25	-3885	4317.83	3564	7342.59	1.701	Si
SLV 11	12.35	-10986	271.62	10078	19621.23	72.237	Si
SLV 11	14.25	-4396	-4278.75	4033	8275.53	1.934	Si
SLV 1	12.35	-6258	-5496.49	5741	11610.11	2.112	Si
SLV 1	14.25	-4726	3032.97	4336	8874.05	2.926	Si

Verifica a taglio nel piano secondo D.M. 17-01-18 (N.T.C.) §7.8.2.2.2 con rottura per scorrimento in combinazioni non sismiche, γM = 3

Comb.	Quota	N	V par	M	σ0	σN	l'	fvd	Vt scorr.	Vt fess.diag.	Vt,lim	c.s.	Verifica
SLU 84	12.35	-11050	-520	-1411.97		10137	3.8933	6907	7530			14.47	Si
SLU 84	14.25	-6869	-520	-242.71		6301	3.8933	6396	6972			13.4	Si
SLU 74	12.35	-11643	-559	-1197.79		10681	3.8933	6980	7609			13.61	Si
SLU 74	14.25	-7472	-559	46.91		6854	3.8933	6469	7052			12.62	Si
SLU 78	12.35	-12815	-568	-1467.74		11755	3.8933	7123	7765			13.66	Si
SLU 78	14.25	-8824	-568	-168.11		8094	3.8933	6635	7233			12.73	Si
SLU 83	12.35	-11051	-526	-1420.88		10137	3.8933	6907	7530			14.32	Si
SLU 83	14.25	-6870	-526	-241.25		6302	3.8933	6396	6972			13.26	Si
SLU 77	12.35	-12815	-574	-1476.66		11756	3.8933	7123	7765			13.53	Si
SLU 77	14.25	-8825	-574	-166.65		8095	3.8933	6635	7233			12.61	Si
SLU 81	12.35	-9879	-511	-1142.02		9063	3.8933	6764	7373			14.43	Si
SLU 81	14.25	-5517	-511	-27.69		5061	3.8933	6230	6792			13.29	Si
SLU 35	12.35	-10761	-512	-1372.97		9871	3.8933	6872	7491			14.64	Si
SLU 35	14.25	-7816	-511	-200.4		7170	3.8933	6512	7098			13.88	Si
SLU 75	12.35	-11643	-554	-1188.87		10681	3.8933	6980	7609			13.74	Si
SLU 75	14.25	-7471	-554	45.45		6853	3.8933	6469	7052			12.74	Si
SLU 32	12.35	-9589	-497	-1094.1		8797	3.8933	6728	7335			14.77	Si
SLU 32	14.25	-6463	-497	13.16		5929	3.8933	6346	6918			13.93	Si
SLU 82	12.35	-9879	-506	-1133.1		9062	3.8933	6764	7373			14.58	Si
SLU 82	14.25	-5516	-506	-29.15		5060	3.8933	6230	6792			13.43	Si

Verifica a taglio nel piano secondo D.M. 17-01-18 (N.T.C.) §7.8.2.2.2 con rottura per scorrimento in combinazioni sismiche, γM = 2

Comb.	Quota	N	V par	M	σ0	σN	l'	fvd	Vt scorr.	Vt fess.diag.	Vt,lim	c.s.	Verifica
SLV 13	12.35	-6854	3814	4457.7		6295	3.8887	9592	10444			2.74	Si
SLV 13	14.25	-3271	1574	-755.9		3001	3.8933	8933	9738			6.19	Si
SLV 16	12.35	-8857	3825	4133.65		8125	3.8933	9958	10856			2.84	Si
SLV 16	14.25	-3555	1125	-2993.88		3832	3.3136	9100	8443			7.51	Si
SLV 1	12.35	-6258	-4463	-5496.49		6974	3.205	9728	8730			1.96	Si
SLV 1	14.25	-4726	-1763	3032.97		4336	3.8933	9200	10030			5.69	Si
SLV 14	12.35	-6854	3814	4457.7		6295	3.8887	9592	10444			2.74	Si
SLV 14	14.25	-3271	1574	-755.9		3001	3.8933	8933	9738			6.19	Si
SLV 3	12.35	-8261	-4452	-5820.54		7918	3.7263	9917	10347			2.32	Si
SLV 3	14.25	-5011	-2212	794.99		4597	3.8933	9253	10086			4.56	Si
SLV 6	12.35	-4130	-1580	-1634.47		3788	3.8933	9091	9910			6.27	Si
SLV 6	14.25	-3885	-71	4317.83		5537	2.5059	9441	6624			93.81	Si
SLV 4	12.35	-8261	-4452	-5820.54		7918	3.7263	9917	10347			2.32	Si
SLV 4	14.25	-5011	-2212	794.99		4597	3.8933	9253	10086			4.56	Si
SLV 15	12.35	-8857	3825	4133.65		8125	3.8933	9958	10856			2.84	Si
SLV 15	14.25	-3555	1125	-2993.88		3832	3.3136	9100	8443			7.51	Si
SLV 5	12.35	-4130	-1580	-1634.47		3788	3.8933	9091	9910			6.27	Si
SLV 5	14.25	-3885	-71	4317.83		5537	2.5059	9441	6624			93.81	Si
SLV 2	12.35	-6258	-4463	-5496.49		6974	3.205	9728	8730			1.96	Si
SLV 2	14.25	-4726	-1763	3032.97		4336	3.8933	9200	10030			5.69	Si

Verifica a pressoflessione fuori piano D.M. 17-01-18 (N.T.C.)

quota 13.025 Wa 0.05 denominatore 8 γM = 2

Comb.	fd	Sa	σ0	N	M	Mc	Coeff.s.	Verifica
SLV 6	143750	0.52	3640	-3968	434.63	539	1.24	Si
SLV 5	143750	0.52	3640	-3968	434.63	539	1.24	Si
SLV 10	143750	0.52	4103	-4473	434.63	605.21	1.39	Si
SLV 9	143750	0.52	4103	-4473	434.63	605.21	1.39	Si
SLV 1	143750	0.52	4351	-4743	434.63	640.31	1.47	Si
SLV 2	143750	0.52	4351	-4743	434.63	640.31	1.47	Si
SLV 3	143750	0.52	5423	-5911	434.63	790.84	1.82	Si
SLV 4	143750	0.52	5423	-5911	434.63	790.84	1.82	Si
SLV 13	143750	0.52	5895	-6426	434.63	856.21	1.97	Si
SLV 14	143750	0.52	5895	-6426	434.63	856.21	1.97	Si

Verifica dei meccanismi locali di collasso con analisi cinematica lineare

forza di aggancio al piano = 0 quota mezzeria = 13.025 Wa = 0.05 Ta = 0.0592

Comb.	N top	N base	V orto	α0	M*	e*	a0*	aLim	Verifica
SLV 11	-1251	-11661	-243	0.02	687.1	0.907	0.32177	10.02695	No
SLV 12	-1251	-11661	-243	0.02	687.1	0.907	0.32177	10.02695	No
SLV 8	-1372	-12026	-226	0.025	695.8	0.904	0.39689	10.02695	No
SLV 7	-1372	-12026	-226	0.025	695.8	0.904	0.39689	10.02695	No
SLV 16	-2213	-8850	-221	0.029	762.9	0.892	0.46654	11.09238	No
SLV 15	-2213	-8850	-221	0.029	762.9	0.892	0.46654	11.09238	No
SLV 13	-3159	-6806	-185	0.037	846.3	0.889	0.60212	11.09238	No
SLV 14	-3159	-6806	-185	0.037	846.3	0.889	0.60212	11.09238	No
SLV 3	-2616	-10066	-163	0.04	797.7	0.89	0.65368	11.09238	No
SLV 4	-2616	-10066	-163	0.04	797.7	0.89	0.65368	11.09238	No

Tabella dei coefficienti di sicurezza minimi

Stato limite	Coeff.s.	Comb.	Verifica
PF_SLU	11.606	SLU 37	Si
V_SLU	12.607	SLU 77	Si
PF_SLV	1.701	SLV 5	Si
V_SLV	1.956	SLV 1	Si
PFFP_SLV	1.24	SLV 5	Si
R_SLV	0.032	SLV 11	No

Maschio 255

Verifiche condotte secondo D.M. 17-01-18 (N.T.C.)

Dati geometrici

X ini.	Y ini.	X fin.	Y fin.	Quota i.	Quota.s	l	Sp.	h netta	h ini.	h fin.	a	a.s.,sx	a.s.,dx
-7.007	6.536	-5.105	6.536	L6	L7	1.902	0.28	3.15	3.15	3.15			

Caratteristiche del materiale

(Circolare 7 21-01-19 C8.5.I) Muratura in mattoni pieni e malta di calce LC2_Corti

fb	fk	fvk0	fmedio	τ0	fv0	μ	ϕ	fv,lim	E	G	FC
600000			345000	9000	20000	0.58	0.77	32500	320000000	128000000	1.2

Verifica a pressoflessione nel piano secondo D.M. 17-01-18 NTC §7.8.2.2.1 in combinazioni non sismiche, γM = 3

Comb.	Quota	N	M	σ0	Mu	c.s.	Verifica
SLU 54	12.35	-5017	-151.61	9420	4220.55	27.838	Si
SLU 54	14.25	-2183	-2361.37	0	0	0	No, e>l/2
SLU 59	12.35	-5112	-133.8	9598	4289.83	32.061	Si
SLU 59	14.25	-1819	-2884.05	0	0	0	No, e>l/2
SLU 57	12.35	-5468	-179.72	10266	4545.63	25.294	Si
SLU 57	14.25	-2292	-2909.97	0	0	0	No, e>l/2
SLU 56	12.35	-5468	-173.64	10265	4545.22	26.176	Si
SLU 56	14.25	-2289	-2905.93	0	0	0	No, e>l/2
SLU 55	12.35	-4662	-109.75	8753	3958.01	36.065	Si
SLU 55	14.25	-1713	-2338.14	0	0	0	No, e>l/2
SLU 61	12.35	-4139	-36.45	7770	3561.14	97.707	Si
SLU 61	14.25	-1604	-1793.08	0	0	0	No, e>l/2

Comb.	Quota	N	M	σ0	Mu	c.s.	Verifica
SLU 53	12.35	-5017	-145.54	9419	4220.14	28.996	Si
SLU 53	14.25	-2180	-2357.32	0	0	0	No, e>l/2
SLU 58	12.35	-5112	-127.73	9597	4289.41	33.582	Si
SLU 58	14.25	-1816	-2880.01	0	0	0	No, e>l/2
SLU 1	12.35	-3403	-115.35	6389	2983.04	25.861	Si
SLU 1	14.25	-1263	-1415.56	0	0	0	No, e>l/2
SLU 60	12.35	-4138	-30.38	7769	3560.7	117.222	Si
SLU 60	14.25	-1601	-1789.03	0	0	0	No, e>l/2

Verifica a pressoflessione nel piano secondo D.M. 17-01-18 NTC §7.8.2.2.1 in combinazioni sismiche, γM = 2

Comb.	Quota	N	M	σ0	Mu	c.s.	Verifica
SLV 2	12.35	-5474	-1767.1	10278	4769.12	2.699	Si
SLV 2	14.25	-526	-1272.53	0	0	0	No, e>l/2
SLV 9	12.35	-5963	1068.58	11196	5152.52	4.822	Si
SLV 9	14.25	-922	-1267.25	0	0	0	No, e>l/2
SLV 8	12.35	-821	-1215.1	0	0	0	No, e>l/2
SLV 8	14.25	-1684	-1692.12	0	0	0	No, e>l/2
SLV 5	12.35	-6685	-52.37	12550	5705.52	108.946	Si
SLV 5	14.25	-557	-1188.3	0	0	0	No, e>l/2
SLV 4	12.35	-3715	-2115.92	6975	3331.97	1.575	Si
SLV 4	14.25	-865	-1423.67	0	0	0	No, e>l/2
SLV 1	12.35	-5474	-1767.1	10278	4769.12	2.699	Si
SLV 1	14.25	-526	-1272.53	0	0	0	No, e>l/2
SLV 10	12.35	-5963	1068.58	11196	5152.52	4.822	Si
SLV 10	14.25	-922	-1267.25	0	0	0	No, e>l/2
SLV 3	12.35	-3715	-2115.92	6975	3331.97	1.575	Si
SLV 3	14.25	-865	-1423.67	0	0	0	No, e>l/2
SLV 7	12.35	-821	-1215.1	0	0	0	No, e>l/2
SLV 7	14.25	-1684	-1692.12	0	0	0	No, e>l/2
SLV 6	12.35	-6685	-52.37	12550	5705.52	108.946	Si
SLV 6	14.25	-557	-1188.3	0	0	0	No, e>l/2

Verifica a taglio nel piano secondo D.M. 17-01-18 (N.T.C.) §7.8.2.2.2 con rottura per scorrimento in combinazioni non sismiche, γM = 3

Comb.	Quota	N	V par	M	σ0	σN	l'	fvd	Vt scorr.	Vt fess.diag.	Vt,lim	c.s.	Verifica
SLU 59	12.35	-5112	974	-133.8		9598	1.9023	6835	3641			3.74	Si
SLU 59	14.25	-1819	1033	-2884.05		0	0	5556	0			0	No, Vu<V
SLU 60	12.35	-4138	844	-30.38		7769	1.9023	6591	3511			4.16	Si
SLU 60	14.25	-1601	896	-1789.03		0	0	5556	0			0	No, Vu<V
SLU 57	12.35	-5468	1023	-179.72		10266	1.9023	6924	3688			3.61	Si
SLU 57	14.25	-2292	1082	-2909.97		0	0	5556	0			0	No, Vu<V
SLU 54	12.35	-5017	928	-151.61		9420	1.9023	6812	3628			3.91	Si
SLU 54	14.25	-2183	983	-2361.37		0	0	5556	0			0	No, Vu<V
SLU 61	12.35	-4139	845	-36.45		7770	1.9023	6592	3511			4.16	Si
SLU 61	14.25	-1604	897	-1793.08		0	0	5556	0			0	No, Vu<V
SLU 1	12.35	-3403	533	-115.35		6389	1.9023	6407	3413			6.41	Si
SLU 1	14.25	-1263	569	-1415.56		0	0	5556	0			0	No, Vu<V
SLU 53	12.35	-5017	927	-145.54		9419	1.9023	6811	3628			3.91	Si
SLU 53	14.25	-2180	982	-2357.32		0	0	5556	0			0	No, Vu<V
SLU 58	12.35	-5112	974	-127.73		9597	1.9023	6835	3641			3.74	Si
SLU 58	14.25	-1816	1033	-2880.01		0	0	5556	0			0	No, Vu<V
SLU 55	12.35	-4662	879	-109.75		8753	1.9023	6723	3581			4.07	Si
SLU 55	14.25	-1713	933	-2338.14		0	0	5556	0			0	No, Vu<V
SLU 56	12.35	-5468	1023	-173.64		10265	1.9023	6924	3688			3.61	Si
SLU 56	14.25	-2289	1082	-2905.93		0	0	5556	0			0	No, Vu<V

Verifica a taglio nel piano secondo D.M. 17-01-18 (N.T.C.) §7.8.2.2.2 con rottura per scorrimento in combinazioni sismiche, γM = 2

Comb.	Quota	N	V par	M	σ0	σN	l'	fvd	Vt scorr.	Vt fess.diag.	Vt,lim	c.s.	Verifica
SLV 8	12.35	-821	480	-1215.1		0	0	8333	0			0	No, Vu<V
SLV 8	14.25	-1684	219	-1692.12		0	0	8333	0			0	No, Vu<V
SLV 7	12.35	-821	480	-1215.1		0	0	8333	0			0	No, Vu<V
SLV 7	14.25	-1684	219	-1692.12		0	0	8333	0			0	No, Vu<V
SLV 9	12.35	-5963	753	1068.58		11196	1.9023	10572	5631			7.47	Si
SLV 9	14.25	-922	1093	-1267.25		0	0	8333	0			0	No, Vu<V
SLV 5	12.35	-6685	-546	-52.37		12550	1.9023	10843	5776			10.58	Si
SLV 5	14.25	-557	157	-1188.3		0	0	8333	0			0	No, Vu<V
SLV 2	12.35	-5474	-1703	-1767.1		10371	1.8851	10408	5494			3.23	Si
SLV 2	14.25	-526	-913	-1272.53		0	0	8333	0			0	No, Vu<V
SLV 6	12.35	-6685	-546	-52.37		12550	1.9023	10843	5776			10.58	Si
SLV 6	14.25	-557	157	-1188.3		0	0	8333	0			0	No, Vu<V
SLV 10	12.35	-5963	753	1068.58		11196	1.9023	10572	5631			7.47	Si
SLV 10	14.25	-922	1093	-1267.25		0	0	8333	0			0	No, Vu<V
SLV 4	12.35	-3715	-1395	-2115.92		11589	1.1449	10651	3414			2.45	Si
SLV 4	14.25	-865	-894	-1423.67		0	0	8333	0			0	No, Vu<V
SLV 1	12.35	-5474	-1703	-1767.1		10371	1.8851	10408	5494			3.23	Si
SLV 1	14.25	-526	-913	-1272.53		0	0	8333	0			0	No, Vu<V
SLV 3	12.35	-3715	-1395	-2115.92		11589	1.1449	10651	3414			2.45	Si
SLV 3	14.25	-865	-894	-1423.67		0	0	8333	0			0	No, Vu<V

Verifica a pressoflessione fuori piano D.M. 17-01-18 (N.T.C.)

quota 13.025 Wa 0.05 denominatore 8 γM = 2

Comb.	fd	Sa	σ0	N	M	Mc	Coeff.s.	Verifica
SLV 11	143750	0.52	3834	-2042	212.37	276.93	1.3	Si
SLV 12	143750	0.52	3834	-2042	212.37	276.93	1.3	Si
SLV 16	143750	0.52	4114	-2191	212.37	296.45	1.4	Si
SLV 15	143750	0.52	4114	-2191	212.37	296.45	1.4	Si
SLV 7	143750	0.52	4197	-2235	212.37	302.2	1.42	Si
SLV 8	143750	0.52	4197	-2235	212.37	302.2	1.42	Si
SLV 13	143750	0.52	4717	-2512	212.37	338.14	1.59	Si
SLV 14	143750	0.52	4717	-2512	212.37	338.14	1.59	Si
SLV 3	143750	0.52	5323	-2835	212.37	379.63	1.79	Si

Comb.	fd	Sa	σ0	N	M	Mc	Coeff.s.	Verifica
SLV 4	143750	0.52	5323	-2835	212.37	379.63	1.79	Si

Verifica dei meccanismi locali di collasso con analisi cinematica lineare

forza di aggancio al piano = 0 quota mezzeria = 13.025 Wa = 0.05 Ta = 0.0592

Comb.	N top	N base	V orto	α0	M*	e*	a0*	aLim	Verifica
SLV 11	-589	-1762	-142	0.009	334.2	0.908	0.14275	10.02695	No
SLV 12	-589	-1762	-142	0.009	334.2	0.908	0.14275	10.02695	No
SLV 7	-564	-1576	-119	0.02	332.4	0.91	0.3125	10.02695	No
SLV 8	-564	-1576	-119	0.02	332.4	0.91	0.3125	10.02695	No
SLV 15	-744	-3550	-101	0.03	345.5	0.9	0.47663	11.09238	No
SLV 16	-744	-3550	-101	0.03	345.5	0.9	0.47663	11.09238	No
SLV 5	-921	-6065	75	0.041	359.4	0.895	0.66984	10.02695	No
SLV 6	-921	-6065	75	0.041	359.4	0.895	0.66984	10.02695	No
SLV 14	-851	-4896	-43	0.055	353.8	0.897	0.88836	11.09238	No
SLV 13	-851	-4896	-43	0.055	353.8	0.897	0.88836	11.09238	No

Tabella dei coefficienti di sicurezza minimi

Stato limite	Coeff.s.	Comb.	Verifica
PF_SLU	0	SLU 1	No
V_SLU	0	SLU 1	No
PF_SLV	0	SLV 1	No
V_SLV	0	SLV 1	No
PFFP_SLV	1.304	SLV 11	Si
R_SLV	0.014	SLV 11	No

Maschio 256

Verifiche condotte secondo D.M. 17-01-18 (N.T.C.)

Dati geometrici

X ini.	Y ini.	X fin.	Y fin.	Quota i.	Quota.s	l	Sp.	h netta	h ini.	h fin.	a	a.s.,sx	a.s.,dx
-11.003	-3.509	-11.003	1.046	L6	L7	4.555	0.28	3.15	3.15	3.15			

Caratteristiche del materiale

(Circolare 7 21-01-19 C8.5.I) Muratura in mattoni pieni e malta di calce LC2_Corti

fb	fk	fvk0	fmedio	τ0	fv0	μ	ϕ	fv,lim	E	G	FC
600000			345000	9000	20000	0.58	0.77	32500	320000000	128000000	1.2

Verifica a pressoflessione nel piano secondo D.M. 17-01-18 NTC §7.8.2.2.1 in combinazioni non sismiche, γM = 3

Comb.	Quota	N	M	σ0	Mu	c.s.	Verifica
SLU 6	11.45	-16140	3542.2	12655	31048.77	8.765	Si
SLU 6	14.6	-3112	-1736.27	2440	6874.28	3.959	Si
SLU 14	11.45	-16930	3494.35	13275	32275.32	9.236	Si
SLU 14	14.6	-3164	-1751.92	2481	6985.81	3.988	Si
SLU 38	11.45	-17928	3582.12	14057	33785.61	9.432	Si
SLU 38	14.6	-3278	-1768.88	2570	7230.84	4.088	Si
SLU 27	11.45	-17665	3850.64	13850	33391.03	8.672	Si
SLU 27	14.6	-3419	-1945.62	2681	7530.82	3.871	Si
SLU 30	11.45	-17138	3629.97	13438	32593.63	8.979	Si
SLU 30	14.6	-3226	-1753.22	2530	7119.58	4.061	Si
SLU 36	11.45	-18356	3777.47	14392	34419.66	9.112	Si
SLU 36	14.6	-3461	-1971.49	2713	7619.01	3.865	Si
SLU 28	11.45	-17566	3825.32	13773	33242.5	8.69	Si
SLU 28	14.6	-3408	-1955.84	2672	7508.16	3.839	Si
SLU 7	11.45	-16042	3516.88	12578	30893.65	8.784	Si
SLU 7	14.6	-3101	-1746.49	2431	6851.48	3.923	Si
SLU 15	11.45	-16832	3469.03	13197	32123.61	9.26	Si
SLU 15	14.6	-3153	-1762.14	2472	6963.03	3.951	Si
SLU 35	11.45	-18455	3802.79	14470	34564.77	9.089	Si
SLU 35	14.6	-3471	-1961.27	2722	7641.65	3.896	Si

Verifica a pressoflessione nel piano secondo D.M. 17-01-18 NTC §7.8.2.2.1 in combinazioni sismiche, γM = 2

Comb.	Quota	N	M	σ0	Mu	c.s.	Verifica
SLV 7	11.45	-11740	2397.67	9205	24723.23	10.311	Si
SLV 7	14.6	-385	-3177.88	0	0	0	No, e>l/2
SLV 14	11.45	-18136	5638.68	14220	36498.53	6.473	Si
SLV 14	14.6	-2810	3904.82	2203	6285.07	1.61	Si
SLV 2	11.45	-11284	-397.23	8847	23838.04	60.011	Si
SLV 2	14.6	-1813	-4001.95	1422	4081.18	1.02	Si
SLV 13	11.45	-18136	5638.68	14220	36498.53	6.473	Si
SLV 13	14.6	-2810	3904.82	2203	6285.07	1.61	Si
SLV 15	11.45	-17240	5953.6	13517	34920.28	5.865	Si
SLV 15	14.6	-1990	3007.91	1560	4474.46	1.488	Si
SLV 4	11.45	-10387	-82.31	8144	22080.23	268.269	Si
SLV 4	14.6	-993	-4898.86	0	0	0	No, e>l/2
SLV 3	11.45	-10387	-82.31	8144	22080.23	268.269	Si
SLV 3	14.6	-993	-4898.86	0	0	0	No, e>l/2
SLV 1	11.45	-11284	-397.23	8847	23838.04	60.011	Si
SLV 1	14.6	-1813	-4001.95	1422	4081.18	1.02	Si
SLV 8	11.45	-11740	2397.67	9205	24723.23	10.311	Si
SLV 8	14.6	-385	-3177.88	0	0	0	No, e>l/2
SLV 16	11.45	-17240	5953.6	13517	34920.28	5.865	Si
SLV 16	14.6	-1990	3007.91	1560	4474.46	1.488	Si

Verifica a taglio nel piano secondo D.M. 17-01-18 (N.T.C.) §7.8.2.2.2 con rottura per scorrimento in combinazioni non sismiche, γM = 3

Comb.	Quota	N	V par	M	σ0	σN	l'	fvd	Vt scorr.	Vt fess.diag.	Vt,lim	c.s.	Verifica
SLU 79	11.45	-21585	-237	4312.8		16924	4.555	7812	9963			42.09	Si
SLU 79	14.6	-3723	765	-1816.7		2919	4.555	5945	7582			9.91	Si
SLU 69	11.45	-21222	-268	4556.01		16640	4.555	7774	9915			37	Si
SLU 69	14.6	-3853	788	-2003.66		3021	4.555	5958	7599			9.64	Si
SLU 77	11.45	-22012	-221	4508.16		17259	4.555	7857	10021			45.26	Si
SLU 77	14.6	-3905	830	-2019.31		3062	4.555	5964	7606			9.17	Si
SLU 80	11.45	-21486	-234	4287.48		16846	4.555	7802	9950			42.55	Si
SLU 80	14.6	-3713	774	-1826.92		2911	4.555	5944	7581			9.79	Si
SLU 35	11.45	-18455	-141	3802.79		14470	4.555	7485	9546			67.5	Si
SLU 35	14.6	-3471	772	-1961.27		2722	4.555	5918	7548			9.78	Si
SLU 78	11.45	-21914	-219	4482.84		17182	4.555	7846	10007			45.8	Si
SLU 78	14.6	-3895	839	-2029.54		3054	4.555	5963	7605			9.07	Si
SLU 36	11.45	-18356	-139	3777.47		14392	4.555	7475	9533			68.81	Si
SLU 36	14.6	-3461	780	-1971.49		2713	4.555	5917	7547			9.67	Si
SLU 57	11.45	-20389	-253	4174.39		15987	4.555	7687	9804			38.82	Si
SLU 57	14.6	-3587	741	-1820.19		2813	4.555	5931	7564			10.21	Si
SLU 28	11.45	-17566	-185	3825.32		13773	4.555	7392	9428			50.92	Si
SLU 28	14.6	-3408	739	-1955.84		2672	4.555	5912	7540			10.21	Si
SLU 70	11.45	-21124	-265	4530.69		16562	4.555	7764	9902			37.35	Si
SLU 70	14.6	-3843	797	-2013.88		3013	4.555	5957	7598			9.54	Si

Verifica a taglio nel piano secondo D.M. 17-01-18 (N.T.C.) §7.8.2.2.2 con rottura per scorrimento in combinazioni sismiche, γM = 2

Comb.	Quota	N	V par	M	σ0	σN	l'	fvd	Vt scorr.	Vt fess.diag.	Vt,lim	c.s.	Verifica
SLV 7	11.45	-11740	7250	2397.67		9205	4.555	10174	12976			1.79	Si
SLV 7	14.6	-385	3061	-3177.88		0	0	8333	0			0	No, Vu<V
SLV 3	11.45	-10387	2784	-82.31		8144	4.555	9962	12706			4.56	Si
SLV 3	14.6	-993	907	-4898.86		0	0	8333	0			0	No, Vu<V
SLV 1	11.45	-11284	-1541	-397.23		8847	4.555	10103	12885			8.36	Si
SLV 1	14.6	-1813	-772	-4001.95		30748	0.2106	14483	854			1.11	Si
SLV 9	11.45	-16784	-7660	3158.7		13160	4.555	10965	13985			1.83	Si
SLV 9	14.6	-3418	-2371	2183.84		2680	4.555	8869	11312			4.77	Si
SLV 10	11.45	-16784	-7660	3158.7		13160	4.555	10965	13985			1.83	Si
SLV 10	14.6	-3418	-2371	2183.84		2680	4.555	8869	11312			4.77	Si
SLV 6	11.45	-14728	-7164	1347.93		11548	4.555	10643	13574			1.89	Si
SLV 6	14.6	-3119	-2537	-188.2		2446	4.555	8822	11252			4.43	Si
SLV 8	11.45	-11740	7250	2397.67		9205	4.555	10174	12976			1.79	Si
SLV 8	14.6	-385	3061	-3177.88		0	0	8333	0			0	No, Vu<V
SLV 2	11.45	-11284	-1541	-397.23		8847	4.555	10103	12885			8.36	Si
SLV 2	14.6	-1813	-772	-4001.95		30748	0.2106	14483	854			1.11	Si
SLV 4	11.45	-10387	2784	-82.31		8144	4.555	9962	12706			4.56	Si
SLV 4	14.6	-993	907	-4898.86		0	0	8333	0			0	No, Vu<V
SLV 5	11.45	-14728	-7164	1347.93		11548	4.555	10643	13574			1.89	Si
SLV 5	14.6	-3119	-2537	-188.2		2446	4.555	8822	11252			4.43	Si

Verifica a pressoflessione fuori piano D.M. 17-01-18 (N.T.C.)

quota 13.025 Wa 0.05 denominatore 8 γM = 2

Comb.	fd	Sa	σ0	N	M	Mc	Coeff.s.	Verifica
SLV 4	143750	0.52	3550	-4527	520.33	615.4	1.18	Si
SLV 3	143750	0.52	3550	-4527	520.33	615.4	1.18	Si
SLV 2	143750	0.52	4259	-5432	520.33	734.04	1.41	Si
SLV 1	143750	0.52	4259	-5432	520.33	734.04	1.41	Si
SLV 8	143750	0.52	4424	-5643	520.33	761.36	1.46	Si
SLV 7	143750	0.52	4424	-5643	520.33	761.36	1.46	Si
SLV 11	143750	0.52	5884	-7504	520.33	999.96	1.92	Si
SLV 12	143750	0.52	5884	-7504	520.33	999.96	1.92	Si
SLV 6	143750	0.52	6790	-8660	520.33	1145.05	2.2	Si
SLV 5	143750	0.52	6790	-8660	520.33	1145.05	2.2	Si

Verifica dei meccanismi locali di collasso con analisi cinematica lineare

forza di aggancio al piano = 0 quota mezzeria = 13.025 Wa = 0.05 Ta = 0.0592

Comb.	N top	N base	V orto	α0	M*	e*	a0*	aLim	Verifica
SLV 10	-3418	-16784	-88	0.055	965.1	0.889	0.89493	10.02695	No
SLV 9	-3418	-16784	-88	0.055	965.1	0.889	0.89493	10.02695	No
SLV 14	-2810	-18136	-54	0.061	911.5	0.89	0.99686	11.09238	No
SLV 13	-2810	-18136	-54	0.061	911.5	0.89	0.99686	11.09238	No
SLV 5	-3119	-14728	-72	0.058	938.4	0.889	0.94183	10.02695	No
SLV 6	-3119	-14728	-72	0.058	938.4	0.889	0.94183	10.02695	No
SLV 8	-385	-11740	81	0.064	744	0.958	0.97449	10.02695	No
SLV 7	-385	-11740	81	0.064	744	0.958	0.97449	10.02695	No
SLV 3	-993	-10387	47	0.069	773	0.922	1.08947	11.09238	No
SLV 4	-993	-10387	47	0.069	773	0.922	1.08947	11.09238	No

Tabella dei coefficienti di sicurezza minimi

Stato limite	Coeff.s.	Comb.	Verifica
PF_SLU	3.839	SLU 28	Si
V_SLU	9.069	SLU 78	Si
PF_SLV	0	SLV 3	No
V_SLV	0	SLV 3	No
PFFP_SLV	1.183	SLV 3	Si
R_SLV	0.089	SLV 9	No

Maschio 257

Verifiche condotte secondo D.M. 17-01-18 (N.T.C.)

Dati geometrici

X ini.	Y ini.	X fin.	Y fin.	Quota i.	Quota.s	l	Sp.	h netta	h ini.	h fin.	a	a.s.,sx	a.s.,dx
-9.746	2.215	-9.748	6.536	L6	L7	4.321	0.14	3.15	3.15	3.15			

Caratteristiche del materiale

(Circolare 7 21-01-19 C8.5.I) Muratura in mattoni pieni e malta di calce LC2_Corti

fb	fk	fvk0	fmedio	τ0	fv0	μ	ϕ	fv,lim	E	G	FC
600000			345000	9000	20000	0.58	0.77	32500	320000000	128000000	1.2

Verifica a pressoflessione nel piano secondo D.M. 17-01-18 NTC §7.8.2.2.1 in combinazioni non sismiche, γM = 3

Comb.	Quota	N	M	σ0	Mu	c.s.	Verifica
SLU 58	11.45	-6649	922.94	10992	12426.9	13.465	Si
SLU 58	14.6	373	-832.12	0	0	0	No, Trazione
SLU 55	11.45	-6545	656.23	10820	12262.69	18.687	Si
SLU 55	14.6	258	-642.06	0	0	0	No, Trazione
SLU 53	11.45	-6857	586.46	11335	12752.14	21.744	Si
SLU 53	14.6	188	-611.67	0	0	0	No, Trazione
SLU 61	11.45	-6612	395	10931	12368.59	31.313	Si
SLU 61	14.6	141	-452.54	0	0	0	No, Trazione
SLU 1	11.45	-4807	279.02	7947	9372.8	33.592	Si
SLU 1	14.6	113	-358.3	0	0	0	No, Trazione
SLU 57	11.45	-6959	860.07	11503	12910.7	15.011	Si
SLU 57	14.6	304	-804.62	0	0	0	No, Trazione
SLU 59	11.45	-6649	925.53	10991	12425.82	13.426	Si
SLU 59	14.6	374	-833.2	0	0	0	No, Trazione
SLU 60	11.45	-6613	392.41	10932	12369.66	31.522	Si
SLU 60	14.6	141	-451.46	0	0	0	No, Trazione
SLU 56	11.45	-6959	857.48	11504	12911.75	15.058	Si
SLU 56	14.6	304	-803.54	0	0	0	No, Trazione
SLU 54	11.45	-6856	589.04	11333	12751.08	21.647	Si
SLU 54	14.6	188	-612.76	0	0	0	No, Trazione

Verifica a pressoflessione nel piano secondo D.M. 17-01-18 NTC §7.8.2.2.1 in combinazioni sismiche, γM = 2

Comb.	Quota	N	M	σ0	Mu	c.s.	Verifica
SLV 4	11.45	-3804	2819.1	6288	7794.95	2.765	Si
SLV 4	14.6	385	-550.66	0	0	0	No, Trazione
SLV 8	11.45	-2029	3516.59	3355	4263.78	1.212	Si
SLV 8	14.6	747	-1942.72	0	0	0	No, Trazione
SLV 3	11.45	-3804	2819.1	6288	7794.95	2.765	Si
SLV 3	14.6	385	-550.66	0	0	0	No, Trazione
SLV 6	11.45	-7903	-1901.2	13065	15248.98	8.021	Si
SLV 6	14.6	-462	1378.07	0	0	0	No, e>l/2
SLV 2	11.45	-5566	1193.76	9201	11119.5	9.315	Si
SLV 2	14.6	22	445.58	0	0	0	No, Trazione
SLV 1	11.45	-5566	1193.76	9201	11119.5	9.315	Si
SLV 1	14.6	22	445.58	0	0	0	No, Trazione
SLV 10	11.45	-8145	-2928.68	13464	15656.96	5.346	Si
SLV 10	14.6	-514	1181.11	0	0	0	No, e>l/2
SLV 5	11.45	-7903	-1901.2	13065	15248.98	8.021	Si
SLV 5	14.6	-462	1378.07	0	0	0	No, e>l/2
SLV 7	11.45	-2029	3516.59	3355	4263.78	1.212	Si
SLV 7	14.6	747	-1942.72	0	0	0	No, Trazione
SLV 9	11.45	-8145	-2928.68	13464	15656.96	5.346	Si
SLV 9	14.6	-514	1181.11	0	0	0	No, e>l/2

Verifica a taglio nel piano secondo D.M. 17-01-18 (N.T.C.) §7.8.2.2.2 con rottura per scorrimento in combinazioni non sismiche, γM = 3

Comb.	Quota	N	V par	M	σ0	σN	l'	fvd	Vt scorr.	Vt fess.diag.	Vt,lim	c.s.	Verifica
SLU 59	11.45	-6649	-49	925.53		10991	4.3209	7021	4247			86.35	Si
SLU 59	14.6	374	403	-833.2		0	0	5556	0			0	No, Vu<V
SLU 60	11.45	-6613	-4	392.41		10932	4.3209	7013	4242			1000	Si
SLU 60	14.6	141	221	-451.46		0	0	5556	0			0	No, Vu<V
SLU 61	11.45	-6612	-2	395		10931	4.3209	7013	4242			1000	Si
SLU 61	14.6	141	223	-452.54		0	0	5556	0			0	No, Vu<V
SLU 1	11.45	-4807	-14	279.02		7947	4.3209	6615	4002			291.59	Si
SLU 1	14.6	113	169	-358.3		0	0	5556	0			0	No, Vu<V
SLU 54	11.45	-6856	-24	589.04		11333	4.3209	7067	4275			179.31	Si
SLU 54	14.6	188	296	-612.76		0	0	5556	0			0	No, Vu<V
SLU 58	11.45	-6649	-51	922.94		10992	4.3209	7021	4247			83.14	Si
SLU 58	14.6	373	401	-832.12		0	0	5556	0			0	No, Vu<V
SLU 56	11.45	-6959	-47	857.48		11504	4.3209	7089	4289			91.39	Si
SLU 56	14.6	304	386	-803.54		0	0	5556	0			0	No, Vu<V
SLU 55	11.45	-6545	-27	656.23		10820	4.3209	6998	4233			158.37	Si
SLU 55	14.6	258	312	-642.06		0	0	5556	0			0	No, Vu<V
SLU 53	11.45	-6857	-26	586.46		11335	4.3209	7067	4275			166.07	Si
SLU 53	14.6	188	294	-611.67		0	0	5556	0			0	No, Vu<V
SLU 57	11.45	-6959	-45	860.07		11503	4.3209	7089	4289			95.24	Si
SLU 57	14.6	304	388	-804.62		0	0	5556	0			0	No, Vu<V

Verifica a taglio nel piano secondo D.M. 17-01-18 (N.T.C.) §7.8.2.2.2 con rottura per scorrimento in combinazioni sismiche, γM = 2

Comb.	Quota	N	V par	M	σ0	σN	l'	fvd	Vt scorr.	Vt fess.diag.	Vt,lim	c.s.	Verifica
SLV 10	11.45	-8145	-5186	-2928.68		13464	4.3209	11026	6670			1.29	Si
SLV 10	14.6	-514	-2309	1181.11		0	0	8333	0			0	No, Vu<V
SLV 6	11.45	-7903	-6014	-1901.2		13065	4.3209	10946	6622			1.1	Si
SLV 6	14.6	-462	-2377	1378.07		0	0	8333	0			0	No, Vu<V
SLV 8	11.45	-2029	5169	3516.59		11302	1.2826	10594	1902			0.37	No, Vu<V
SLV 8	14.6	747	2677	-1942.72		0	0	8333	0			0	No, Vu<V
SLV 9	11.45	-8145	-5186	-2928.68		13464	4.3209	11026	6670			1.29	Si
SLV 9	14.6	-514	-2309	1181.11		0	0	8333	0			0	No, Vu<V
SLV 2	11.45	-5566	-3066	1193.76		9201	4.3209	10174	6154			2.01	Si
SLV 2	14.6	22	-688	445.58		0	0	8333	0			0	No, Vu<V

Comb.	Quota	N	V par	M	σ0	σN	l'	fvd	Vt scorr.	Vt fess.diag.	Vt,lim	c.s.	Verifica
SLV 1	11.45	-5566	-3066	1193.76		9201	4.3209	10174	6154			2.01	Si
SLV 1	14.6	22	-688	445.58		0	0	8333	0			0	No, Vu<V
SLV 3	11.45	-3804	289	2819.1		6381	4.258	9610	5728			19.82	Si
SLV 3	14.6	385	828	-550.66		0	0	8333	0			0	No, Vu<V
SLV 7	11.45	-2029	5169	3516.59		11302	1.2826	10594	1902			0.37	No, Vu<V
SLV 7	14.6	747	2677	-1942.72		0	0	8333	0			0	No, Vu<V
SLV 4	11.45	-3804	289	2819.1		6381	4.258	9610	5728			19.82	Si
SLV 4	14.6	385	828	-550.66		0	0	8333	0			0	No, Vu<V
SLV 5	11.45	-7903	-6014	-1901.2		13065	4.3209	10946	6622			1.1	Si
SLV 5	14.6	-462	-2377	1378.07		0	0	8333	0			0	No, Vu<V

Verifica a pressoflessione fuori piano D.M. 17-01-18 (N.T.C.)

quota 13.025 Wa 0.03 denominatore 8 γM = 2

Comb.	fd	Sa	σ0	N	M	Mc	Coeff.s.	Verifica
SLV 11	143750	0.52	0	-117	258.01	0	0	No, e>t/2
SLV 14	143750	0.52	0	-2179	258.01	0	0	No, e>t/2
SLV 1	143750	0.52	0	-3578	258.01	0	0	No, e>t/2
SLV 7	143750	0.52	0	-536	258.01	0	0	No, e>t/2
SLV 3	143750	0.52	0	-2400	258.01	0	0	No, e>t/2
SLV 12	143750	0.52	0	-117	258.01	0	0	No, e>t/2
SLV 4	143750	0.52	0	-2400	258.01	0	0	No, e>t/2
SLV 8	143750	0.52	0	-536	258.01	0	0	No, e>t/2
SLV 13	143750	0.52	0	-2179	258.01	0	0	No, e>t/2
SLV 2	143750	0.52	0	-3578	258.01	0	0	No, e>t/2

Verifica dei meccanismi locali di collasso con analisi cinematica lineare

forza di aggancio al piano = 0 quota mezzeria = 13.025 Wa = 0.03 Ta = 0.1184

Comb.	N top	N base	V orto	α0	M*	e*	a0*	aLim	Verifica
SLV 8	747	-2029	13	0	0	0	0	20.8876	No, Trazione
SLV 1	22	-5566	-3	0	0	0	0	21.1064	No, Trazione
SLV 2	22	-5566	-3	0	0	0	0	21.1064	No, Trazione
SLV 16	212	-4608	2	0	0	0	0	21.1064	No, Trazione
SLV 3	385	-3804	5	0	0	0	0	21.1064	No, Trazione
SLV 12	696	-2270	12	0	0	0	0	20.8876	No, Trazione
SLV 15	212	-4608	2	0	0	0	0	21.1064	No, Trazione
SLV 11	696	-2270	12	0	0	0	0	20.8876	No, Trazione
SLV 7	747	-2029	13	0	0	0	0	20.8876	No, Trazione
SLV 4	385	-3804	5	0	0	0	0	21.1064	No, Trazione

Tabella dei coefficienti di sicurezza minimi

Stato limite	Coeff.s.	Comb.	Verifica
PF_SLU	0	SLU 84	No
V_SLU	0	SLU 1	No
PF_SLV	0	SLV 16	No
V_SLV	0	SLV 1	No
PFFP_SLV	0	SLV 1	No
R_SLV	0	SLV 16	No

Maschio 258

Verifiche condotte secondo D.M. 17-01-18 (N.T.C.)

Dati geometrici

X ini.	Y ini.	X fin.	Y fin.	Quota i.	Quota.s	l	Sp.	h netta	h ini.	h fin.	a	a.s.,sx	a.s.,dx
-9.454	-3.248	-11.003	-3.248	L6	L7	1.549	0.28	3.15	3.15	3.15			

Caratteristiche del materiale

(Circolare 7 21-01-19 C8.5.I) Muratura in mattoni pieni e malta di calce LC2_Corti

fb	fk	fvk0	fmedio	τ0	fv0	μ	ϕ	fv,lim	E	G	FC
600000			345000	9000	20000	0.58	0.77	32500	320000000	128000000	1.2

Verifica a pressoflessione nel piano secondo D.M. 17-01-18 NTC §7.8.2.2.1 in combinazioni non sismiche, γM = 3

Comb.	Quota	N	M	σ0	Mu	c.s.	Verifica
SLU 41	11.45	-2382	843.26	5491	1720.29	2.04	Si
SLU 41	13.55	-3157	-588.79	7280	2227	3.782	Si
SLU 37	11.45	-2866	794.03	6609	2040.08	2.569	Si
SLU 37	13.55	-3578	-614.47	8249	2490.48	4.053	Si
SLU 82	11.45	-3025	814.81	6974	2142.27	2.629	Si
SLU 82	13.55	-3270	-559.59	7539	2298.44	4.107	Si
SLU 40	11.45	-2099	774.43	4840	1529.36	1.975	Si
SLU 40	13.55	-2670	-489.01	6156	1911.85	3.91	Si
SLU 81	11.45	-3003	858.61	6923	2128.2	2.479	Si
SLU 81	13.55	-3313	-607.78	7638	2325.49	3.826	Si
SLU 42	11.45	-2403	799.46	5541	1734.96	2.17	Si
SLU 42	13.55	-3115	-540.6	7181	2199.66	4.069	Si
SLU 39	11.45	-2077	818.23	4789	1514.4	1.851	Si
SLU 39	13.55	-2713	-537.2	6255	1940.02	3.611	Si
SLU 83	11.45	-3307	883.64	7625	2321.75	2.627	Si
SLU 83	13.55	-3757	-659.37	8663	2600.78	3.944	Si
SLU 32	11.45	-2704	774.93	6233	1933.84	2.496	Si
SLU 32	13.55	-3378	-604.31	7788	2366.32	3.916	Si
SLU 31	11.45	-2295	670.97	5290	1661.8	2.477	Si
SLU 31	13.55	-2618	-430.97	6035	1877.16	4.356	Si

Verifica a pressoflessione nel piano secondo D.M. 17-01-18 NTC §7.8.2.2.1 in combinazioni sismiche, γM = 2

Comb.	Quota	N	M	σ0	Mu	c.s.	Verifica
SLV 14	11.45	-4182	-1446.78	9642	2983.66	2.062	Si
SLV 14	13.55	442	976.56	0	0	0	No, Trazione
SLV 12	11.45	-2207	-312.84	5089	1638.57	5.238	Si
SLV 12	13.55	-757	1012.1	0	0	0	No, e>l/2
SLV 11	11.45	-2207	-312.84	5089	1638.57	5.238	Si
SLV 11	13.55	-757	1012.1	0	0	0	No, e>l/2
SLV 13	11.45	-4182	-1446.78	9642	2983.66	2.062	Si
SLV 13	13.55	442	976.56	0	0	0	No, Trazione
SLV 2	11.45	-1720	2512.69	0	0	0	No, e>l/2
SLV 2	13.55	-5768	-2317.58	13297	3981.09	1.718	Si
SLV 15	11.45	-3669	-1563.03	8458	2644.72	1.692	Si
SLV 15	13.55	892	1525.09	0	0	0	No, Trazione
SLV 1	11.45	-1720	2512.69	0	0	0	No, e>l/2
SLV 1	13.55	-5768	-2317.58	13297	3981.09	1.718	Si
SLV 16	11.45	-3669	-1563.03	8458	2644.72	1.692	Si
SLV 16	13.55	892	1525.09	0	0	0	No, Trazione
SLV 4	11.45	-1207	2396.44	0	0	0	No, e>l/2
SLV 4	13.55	-5318	-1769.05	12260	3705.54	2.095	Si
SLV 3	11.45	-1207	2396.44	0	0	0	No, e>l/2
SLV 3	13.55	-5318	-1769.05	12260	3705.54	2.095	Si

Verifica a taglio nel piano secondo D.M. 17-01-18 (N.T.C.) §7.8.2.2.2 con rottura per scorrimento in combinazioni non sismiche, γM = 3

Comb.	Quota	N	V par	M	σ0	σN	I'	fvd	Vt scorr.	Vt fess.diag.	Vt,lim	c.s.	Verifica
SLU 83	11.45	-3307	1743	883.64		7760	1.522	6590	2809			1.61	Si
SLU 83	13.55	-3757	1737	-659.37		8663	1.5491	6711	2911			1.68	Si
SLU 37	11.45	-2866	1586	794.03		6859	1.4926	6470	2704			1.71	Si
SLU 37	13.55	-3578	1580	-614.47		8249	1.5491	6655	2887			1.83	Si
SLU 77	11.45	-3933	1769	840.34		9069	1.5491	6765	2934			1.66	Si
SLU 77	13.55	-4422	1763	-726.48		10196	1.5491	6915	2999			1.7	Si
SLU 42	11.45	-2403	1542	799.46		6475	1.3257	6419	2383			1.54	Si
SLU 42	13.55	-3115	1556	-540.6		7181	1.5491	6513	2825			1.82	Si
SLU 39	11.45	-2077	1532	818.23		6497	1.142	6422	2053			1.34	Si
SLU 39	13.55	-2713	1527	-537.2		6255	1.5491	6390	2771			1.81	Si
SLU 41	11.45	-2382	1621	843.26		6743	1.2614	6455	2280			1.41	Si
SLU 41	13.55	-3157	1615	-588.79		7280	1.5491	6526	2831			1.75	Si
SLU 35	11.45	-3008	1646	799.96		7041	1.5257	6494	2774			1.69	Si
SLU 35	13.55	-3822	1641	-655.91		8813	1.5491	6731	2919			1.78	Si
SLU 81	11.45	-3003	1655	858.61		7316	1.4658	6531	2681			1.62	Si
SLU 81	13.55	-3313	1650	-607.78		7638	1.5491	6574	2851			1.73	Si
SLU 32	11.45	-2704	1558	774.93		6597	1.4637	6435	2637			1.69	Si
SLU 32	13.55	-3378	1553	-604.31		7788	1.5491	6594	2860			1.84	Si
SLU 40	11.45	-2099	1454	774.43		6161	1.2169	6377	2173			1.49	Si
SLU 40	13.55	-2670	1468	-489.01		6156	1.5491	6376	2766			1.88	Si

Verifica a taglio nel piano secondo D.M. 17-01-18 (N.T.C.) §7.8.2.2.2 con rottura per scorrimento in combinazioni sismiche, γM = 2

Comb.	Quota	N	V par	M	σ0	σN	I'	fvd	Vt scorr.	Vt fess.diag.	Vt,lim	c.s.	Verifica
SLV 11	11.45	-2207	-520	-312.84		5089	1.5491	9351	4056			7.8	Si
SLV 11	13.55	-757	-250	1012.1		0	0	8333	0			0	No, Vu<V
SLV 4	11.45	-1207	3934	2396.44		0	0	8333	0			0	No, Vu<V
SLV 4	13.55	-5318	3081	-1769.05		14327	1.3256	11199	4157			1.35	Si
SLV 3	11.45	-1207	3934	2396.44		0	0	8333	0			0	No, Vu<V
SLV 3	13.55	-5318	3081	-1769.05		14327	1.3256	11199	4157			1.35	Si
SLV 1	11.45	-1720	4262	2512.69		0	0	8333	0			0	No, Vu<V
SLV 1	13.55	-5768	3399	-2317.58		18422	1.1181	12018	3763			1.11	Si
SLV 15	11.45	-3669	-2330	-1563.03		12533	1.0454	10840	3173			1.36	Si
SLV 15	13.55	892	-1473	1525.09		0	0	8333	0			0	No, Vu<V
SLV 13	11.45	-4182	-2003	-1446.78		11616	1.2858	10657	3837			1.92	Si
SLV 13	13.55	442	-1155	976.56		0	0	8333	0			0	No, Vu<V
SLV 2	11.45	-1720	4262	2512.69		0	0	8333	0			0	No, Vu<V
SLV 2	13.55	-5768	3399	-2317.58		18422	1.1181	12018	3763			1.11	Si
SLV 12	11.45	-2207	-520	-312.84		5089	1.5491	9351	4056			7.8	Si
SLV 12	13.55	-757	-250	1012.1		0	0	8333	0			0	No, Vu<V
SLV 16	11.45	-3669	-2330	-1563.03		12533	1.0454	10840	3173			1.36	Si
SLV 16	13.55	892	-1473	1525.09		0	0	8333	0			0	No, Vu<V
SLV 14	11.45	-4182	-2003	-1446.78		11616	1.2858	10657	3837			1.92	Si
SLV 14	13.55	442	-1155	976.56		0	0	8333	0			0	No, Vu<V

Verifica a pressoflessione fuori piano D.M. 17-01-18 (N.T.C.)

quota 13.025 Wa 0.05 denominatore 8 γM = 2

Comb.	fd	Sa	σ0	N	M	Mc	Coeff.s.	Verifica
SLV 13	143750	0.52	0	-595	172.93	0	0	No, e>t/2
SLV 12	143750	0.52	0	-489	172.93	0	0	No, e>t/2
SLV 15	143750	0.52	0	262	172.93	0	0	No, Trazione
SLV 16	143750	0.52	0	262	172.93	0	0	No, Trazione
SLV 14	143750	0.52	0	-595	172.93	0	0	No, e>t/2
SLV 11	143750	0.52	0	-489	172.93	0	0	No, e>t/2
SLV 7	143750	0.52	4587	-1990	172.93	268.08	1.55	Si
SLV 8	143750	0.52	4587	-1990	172.93	268.08	1.55	Si
SLV 9	143750	0.52	7711	-3345	172.93	438.69	2.54	Si
SLV 10	143750	0.52	7711	-3345	172.93	438.69	2.54	Si

Verifica dei meccanismi locali di collasso con analisi cinematica lineare

forza di aggancio al piano = 0 quota mezzeria = 13.025 Wa = 0.05 Ta = 0.0592

Comb.	N top	N base	V orto	α0	M*	e*	a0*	aLim	Verifica
SLV 10	178	-3920	-163	0	0	0	0	10.02695	No, Trazione
SLV 4	-775	-1207	185	0	294.7	0.894	0	11.09238	No
SLV 3	-775	-1207	185	0	294.7	0.894	0	11.09238	No
SLV 14	-394	-4182	-184	0	266.4	0.916	0	11.09238	No

Comb.	N top	N base	V orto	α0	M*	e*	a0*	aLim	Verifica
SLV 9	178	-3920	-163	0	0	0	0	10.02695	No, Trazione
SLV 5	203	-3181	-74	0	0	0	0	10.02695	No, Trazione
SLV 6	203	-3181	-74	0	0	0	0	10.02695	No, Trazione
SLV 13	-394	-4182	-184	0	266.4	0.916	0	11.09238	No
SLV 8	-1346	-1469	164	0.002	344.9	0.889	0.03394	10.02695	No
SLV 7	-1346	-1469	164	0.002	344.9	0.889	0.03394	10.02695	No

Tabella dei coefficienti di sicurezza minimi

Stato limite	Coeff.s.	Comb.	Verifica
PF_SLU	1.851	SLU 39	Si
V_SLU	1.34	SLU 39	Si
PF_SLV	0	SLV 16	No
V_SLV	0	SLV 1	No
PFFP_SLV	0	SLV 16	No
R_SLV	0	SLV 10	No

Maschio 259

Verifiche condotte secondo D.M. 17-01-18 (N.T.C.)

Dati geometrici

X ini.	Y ini.	X fin.	Y fin.	Quota i.	Quota.s	l	Sp.	h netta	h ini.	h fin.	a	a.s.,sx	a.s.,dx
-6.268	-3.248	-6.268	1.046	L6	L7	4.294	0.14	3.15	3.15	3.15			

Caratteristiche del materiale

(Circolare 7 21-01-19 C8.5.I) Muratura in mattoni pieni e malta di calce LC2_Corti

fb	fk	fvk0	fmedio	τ0	fv0	μ	ϕ	fv,lim	E	G	FC
600000			345000	9000	20000	0.58	0.77	32500	320000000	128000000	1.2

Verifica a pressoflessione nel piano secondo D.M. 17-01-18 NTC §7.8.2.2.1 in combinazioni non sismiche, γM = 3

Comb.	Quota	N	M	σ0	Mu	c.s.	Verifica
SLU 49	11.45	-7040	4757.16	11712	12941.53	2.72	Si
SLU 49	14.6	-197	1222.33	0	0	0	No, e>l/2
SLU 57	11.45	-7326	5150.14	12188	13375.6	2.597	Si
SLU 57	14.6	-230	1138.03	0	0	0	No, e>l/2
SLU 50	11.45	-6339	5314.6	10545	11846.9	2.229	Si
SLU 50	14.6	227	1943.2	0	0	0	No, Trazione
SLU 58	11.45	-6625	5707.58	11021	12298.57	2.155	Si
SLU 58	14.6	194	1858.89	0	0	0	No, Trazione
SLU 51	11.45	-6827	4611.44	11357	12613.82	2.735	Si
SLU 51	14.6	-98	1323.28	0	0	0	No, e>l/2
SLU 53	11.45	-6806	5096.66	11322	12580.63	2.468	Si
SLU 53	14.6	-48	1291.84	0	0	0	No, e>l/2
SLU 48	11.45	-6552	5460.31	10899	12183.74	2.231	Si
SLU 48	14.6	129	1842.24	0	0	0	No, Trazione
SLU 45	11.45	-6520	4703.68	10846	12133.5	2.58	Si
SLU 45	14.6	-14	1376.15	0	0	0	No, e>l/2
SLU 56	11.45	-6838	5853.3	11375	12630.07	2.158	Si
SLU 56	14.6	95	1757.94	0	0	0	No, Trazione
SLU 1	11.45	-4942	3061.87	8221	9539.03	3.115	Si
SLU 1	14.6	-45	802.13	0	0	0	No, e>l/2

Verifica a pressoflessione nel piano secondo D.M. 17-01-18 NTC §7.8.2.2.1 in combinazioni sismiche, γM = 2

Comb.	Quota	N	M	σ0	Mu	c.s.	Verifica
SLV 7	11.45	-1913	10421.2	0	0	0	No, e>l/2
SLV 7	14.6	1939	2585.04	0	0	0	No, Trazione
SLV 4	11.45	-3932	4856.82	6541	7989.73	1.645	Si
SLV 4	14.6	181	1292.46	0	0	0	No, Trazione
SLV 11	11.45	-2076	10814.11	0	0	0	No, e>l/2
SLV 11	14.6	2178	2615.51	0	0	0	No, Trazione
SLV 15	11.45	-4472	6166.52	7440	9017.28	1.462	Si
SLV 15	14.6	979	1394.03	0	0	0	No, Trazione
SLV 3	11.45	-3932	4856.82	6541	7989.73	1.645	Si
SLV 3	14.6	181	1292.46	0	0	0	No, Trazione
SLV 14	11.45	-6365	1789.96	10588	12480.47	6.972	Si
SLV 14	14.6	-289	316.58	481	617.69	1.951	Si
SLV 16	11.45	-4472	6166.52	7440	9017.28	1.462	Si
SLV 16	14.6	979	1394.03	0	0	0	No, Trazione
SLV 8	11.45	-1913	10421.2	0	0	0	No, e>l/2
SLV 8	14.6	1939	2585.04	0	0	0	No, Trazione
SLV 12	11.45	-2076	10814.11	0	0	0	No, e>l/2
SLV 12	14.6	2178	2615.51	0	0	0	No, Trazione
SLV 13	11.45	-6365	1789.96	10588	12480.47	6.972	Si
SLV 13	14.6	-289	316.58	481	617.69	1.951	Si

Verifica a taglio nel piano secondo D.M. 17-01-18 (N.T.C.) §7.8.2.2.2 con rottura per scorrimento in combinazioni non sismiche, γM = 3

Comb.	Quota	N	V par	M	σ0	σN	l'	fvd	Vt scorr.	Vt fess.diag.	Vt,lim	c.s.	Verifica
SLU 58	11.45	-6625	-252	5707.58		12272	3.856	7192	3882			15.41	Si
SLU 58	14.6	194	-251	1858.89		0	0	5556	0			0	No, Vu<V
SLU 49	11.45	-7040	-369	4757.16		11712	4.2938	7117	4278			11.6	Si
SLU 49	14.6	-197	-367	1222.33		0	0	5556	0			0	No, Vu<V
SLU 51	11.45	-6827	-369	4611.44		11357	4.2938	7070	4250			11.51	Si
SLU 51	14.6	-98	-367	1323.28		0	0	5556	0			0	No, Vu<V
SLU 57	11.45	-7326	-390	5150.14		12188	4.2938	7181	4316			11.06	Si
SLU 57	14.6	-230	-388	1138.03		0	0	5556	0			0	No, Vu<V
SLU 45	11.45	-6520	-202	4703.68		10890	4.2763	7008	4195			20.72	Si
SLU 45	14.6	-14	-205	1376.15		0	0	5556	0			0	No, Vu<V

Comb.	Quota	N	V par	M	σ0	σN	l'	fvd	Vt scorr.	Vt fess.diag.	Vt,lim	c.s.	Verifica
SLU 50	11.45	-6339	-231	5314.6		11534	3.9254	7093	3898			16.91	Si
SLU 50	14.6	227	-230	1943.2		0	0	5556	0			0	No, Vu<V
SLU 53	11.45	-6806	-224	5096.66		11591	4.1941	7101	4170			18.63	Si
SLU 53	14.6	-48	-226	1291.84		0	0	5556	0			0	No, Vu<V
SLU 1	11.45	-4942	-142	3061.87		8221	4.2938	6652	3999			28.16	Si
SLU 1	14.6	-45	-145	802.13		0	0	5556	0			0	No, Vu<V
SLU 56	11.45	-6838	-251	5853.3		12612	3.8726	7237	3924			15.6	Si
SLU 56	14.6	95	-252	1757.94		0	0	5556	0			0	No, Vu<V
SLU 48	11.45	-6552	-230	5460.31		11876	3.9404	7139	3938			17.11	Si
SLU 48	14.6	129	-231	1842.24		0	0	5556	0			0	No, Vu<V

Verifica a taglio nel piano secondo D.M. 17-01-18 (N.T.C.) §7.8.2.2.2 con rottura per scorrimento in combinazioni sismiche, γM = 2

Comb.	Quota	N	V par	M	σ0	σN	l'	fvd	Vt scorr.	Vt fess.diag.	Vt,lim	c.s.	Verifica
SLV 9	11.45	-8383	-6665	-3774.41		13946	4.2938	11123	6686			1	Si
SLV 9	14.6	-2047	-4868	-976		3405	4.2938	9014	5419			1.11	Si
SLV 4	11.45	-3932	2346	4856.82		10269	2.7351	10387	3977			1.7	Si
SLV 4	14.6	181	1759	1292.46		0	0	8333	0			0	No, Vu<V
SLV 3	11.45	-3932	2346	4856.82		10269	2.7351	10387	3977			1.7	Si
SLV 3	14.6	181	1759	1292.46		0	0	8333	0			0	No, Vu<V
SLV 10	11.45	-8383	-6665	-3774.41		13946	4.2938	11123	6686			1	Si
SLV 10	14.6	-2047	-4868	-976		3405	4.2938	9014	5419			1.11	Si
SLV 8	11.45	-1913	6353	10421.2		0	0	8333	0			0	No, Vu<V
SLV 8	14.6	1939	4550	2585.04		0	0	8333	0			0	No, Vu<V
SLV 12	11.45	-2076	5991	10814.11		0	0	8333	0			0	No, Vu<V
SLV 12	14.6	2178	4217	2615.51		0	0	8333	0			0	No, Vu<V
SLV 11	11.45	-2076	5991	10814.11		0	0	8333	0			0	No, Vu<V
SLV 11	14.6	2178	4217	2615.51		0	0	8333	0			0	No, Vu<V
SLV 7	11.45	-1913	6353	10421.2		0	0	8333	0			0	No, Vu<V
SLV 7	14.6	1939	4550	2585.04		0	0	8333	0			0	No, Vu<V
SLV 16	11.45	-4472	1139	6166.52		13863	2.3044	11106	3583			3.15	Si
SLV 16	14.6	979	649	1394.03		0	0	8333	0			0	No, Vu<V
SLV 15	11.45	-4472	1139	6166.52		13863	2.3044	11106	3583			3.15	Si
SLV 15	14.6	979	649	1394.03		0	0	8333	0			0	No, Vu<V

Verifica a pressoflessione fuori piano D.M. 17-01-18 (N.T.C.)

quota 13.025 Wa 0.03 denominatore 8 γM = 2

Comb.	fd	Sa	σ0	N	M	Mc	Coeff.s.	Verifica
SLV 10	143750	0.52	0	-3298	256.39	0	0	No, e>t/2
SLV 3	143750	0.52	0	-2546	256.39	0	0	No, e>t/2
SLV 7	143750	0.52	0	-1591	256.39	0	0	No, e>t/2
SLV 5	143750	0.52	0	-3533	256.39	0	0	No, e>t/2
SLV 2	143750	0.52	0	-3129	256.39	0	0	No, e>t/2
SLV 4	143750	0.52	0	-2546	256.39	0	0	No, e>t/2
SLV 1	143750	0.52	0	-3129	256.39	0	0	No, e>t/2
SLV 9	143750	0.52	0	-3298	256.39	0	0	No, e>t/2
SLV 8	143750	0.52	0	-1591	256.39	0	0	No, e>t/2
SLV 6	143750	0.52	0	-3533	256.39	0	0	No, e>t/2

Verifica dei meccanismi locali di collasso con analisi cinematica lineare

forza di aggancio al piano = 0 quota mezzeria = 13.025 Wa = 0.03 Ta = 0.1184

Comb.	N top	N base	V orto	α0	M*	e*	a0*	aLim	Verifica
SLV 16	979	-4472	81	0	0	0	0	21.1064	No, Trazione
SLV 11	2178	-2076	-53	0	0	0	0	20.8876	No, Trazione
SLV 7	1939	-1913	-116	0	0	0	0	20.8876	No, Trazione
SLV 8	1939	-1913	-116	0	0	0	0	20.8876	No, Trazione
SLV 3	181	-3932	-132	0	0	0	0	21.1064	No, Trazione
SLV 4	181	-3932	-132	0	0	0	0	21.1064	No, Trazione
SLV 15	979	-4472	81	0	0	0	0	21.1064	No, Trazione
SLV 12	2178	-2076	-53	0	0	0	0	20.8876	No, Trazione
SLV 14	-289	-6365	132	0	354.9	0.942	0	21.1064	No
SLV 13	-289	-6365	132	0	354.9	0.942	0	21.1064	No

Tabella dei coefficienti di sicurezza minimi

Stato limite	Coeff.s.	Comb.	Verifica
PF_SLU	0	SLU 83	No
V_SLU	0	SLU 1	No
PF_SLV	0	SLV 16	No
V_SLV	0	SLV 3	No
PFFP_SLV	0	SLV 1	No
R_SLV	0	SLV 16	No

Maschio 260

Verifiche condotte secondo D.M. 17-01-18 (N.T.C.)

Dati geometrici

X ini.	Y ini.	X fin.	Y fin.	Quota i.	Quota.s	l	Sp.	h netta	h ini.	h fin.	a	a.s.,sx	a.s.,dx
-7.464	-3.248	-8.554	-3.248	L6	L7	1.09	0.28	3.15	3.15	3.15			

Caratteristiche del materiale

(Circolare 7 21-01-19 C8.5.I) Muratura in mattoni pieni e malta di calce LC2_Corti

fb	fk	fvk0	fmedio	τ0	fv0	μ	ϕ	fv,lim	E	G	FC
600000			345000	9000	20000	0.58	0.77	32500	320000000	128000000	1.2

Verifica a pressoflessione nel piano secondo D.M. 17-01-18 NTC §7.8.2.2.1 in combinazioni non sismiche, γM = 3

Comb.	Quota	N	M	σ0	Mu	c.s.	Verifica
SLU 60	12.35	-3049	154.21	9989	1457.84	9.454	Si
SLU 60	14.25	-1944	-585.01	6368	976.48	1.669	Si
SLU 39	12.35	-2261	188.82	7409	1120.28	5.933	Si
SLU 39	14.25	-1623	-546.44	5319	826.98	1.513	Si
SLU 83	12.35	-3521	200.21	11538	1647.34	8.228	Si
SLU 83	14.25	-2516	-769.48	8243	1232.31	1.601	Si
SLU 79	12.35	-4097	186.84	13423	1864.82	9.981	Si
SLU 79	14.25	-2999	-875	9827	1437.4	1.643	Si
SLU 41	12.35	-2744	185.23	8990	1330.39	7.182	Si
SLU 41	14.25	-2074	-658.7	6794	1035.86	1.573	Si
SLU 22	12.35	-2570	156.22	8421	1255.9	8.039	Si
SLU 22	14.25	-1735	-523.99	5683	879.38	1.678	Si
SLU 37	12.35	-3319	171.86	10876	1567.48	9.121	Si
SLU 37	14.25	-2557	-764.22	8379	1250.32	1.636	Si
SLU 18	12.35	-2271	139.22	7442	1124.77	8.079	Si
SLU 18	14.25	-1502	-474.23	4920	768.94	1.621	Si
SLU 81	12.35	-3039	203.81	9956	1453.69	7.133	Si
SLU 81	14.25	-2065	-657.22	6767	1032.16	1.57	Si
SLU 20	12.35	-2754	135.63	9024	1334.67	9.84	Si
SLU 20	14.25	-1952	-586.49	6395	980.23	1.671	Si

Verifica a pressoflessione nel piano secondo D.M. 17-01-18 NTC §7.8.2.2.1 in combinazioni sismiche, γM = 2

Comb.	Quota	N	M	σ0	Mu	c.s.	Verifica
SLV 15	12.35	-4787	-2102.73	15685	2274.04	1.081	Si
SLV 15	14.25	-748	1224.35	0	0	0	No, e>l/2
SLV 7	12.35	-418	7.29	1369	225.13	30.885	Si
SLV 7	14.25	1028	-19.28	0	0	0	No, Trazione
SLV 12	12.35	-2015	-1200.44	0	0	0	No, e>l/2
SLV 12	14.25	1073	841.62	0	0	0	No, Trazione
SLV 2	12.35	-244	2357.36	0	0	0	No, e>l/2
SLV 2	14.25	-2503	-2178.15	0	0	0	No, e>l/2
SLV 3	12.35	536	1923.03	0	0	0	No, Trazione
SLV 3	14.25	-897	-1645.31	0	0	0	No, e>l/2
SLV 11	12.35	-2015	-1200.44	0	0	0	No, e>l/2
SLV 11	14.25	1073	841.62	0	0	0	No, Trazione
SLV 16	12.35	-4787	-2102.73	15685	2274.04	1.081	Si
SLV 16	14.25	-748	1224.35	0	0	0	No, e>l/2
SLV 8	12.35	-418	7.29	1369	225.13	30.885	Si
SLV 8	14.25	1028	-19.28	0	0	0	No, Trazione
SLV 4	12.35	536	1923.03	0	0	0	No, Trazione
SLV 4	14.25	-897	-1645.31	0	0	0	No, e>l/2
SLV 1	12.35	-244	2357.36	0	0	0	No, e>l/2
SLV 1	14.25	-2503	-2178.15	0	0	0	No, e>l/2

Verifica a taglio nel piano secondo D.M. 17-01-18 (N.T.C.) §7.8.2.2.2 con rottura per scorrimento in combinazioni non sismiche, γM = 3

Comb.	Quota	N	V par	M	σ0	σN	l'	fvd	Vt scorr.	Vt fess.diag.	Vt,lim	c.s.	Verifica
SLU 81	12.35	-3039	809	203.81		9956	1.09	6883	2101			2.6	Si
SLU 81	14.25	-2065	105	-657.22		10841	0.6804	7001	1334			12.7	Si
SLU 41	12.35	-2744	781	185.23		8990	1.09	6754	2061			2.64	Si
SLU 41	14.25	-2074	132	-658.7		10858	0.682	7003	1337			10.13	Si
SLU 83	12.35	-3521	866	200.21		11538	1.09	7094	2165			2.5	Si
SLU 83	14.25	-2516	139	-769.48		12524	0.7174	7225	1451			10.44	Si
SLU 74	12.35	-3824	834	190.55		12529	1.09	7226	2205			2.65	Si
SLU 74	14.25	-2740	149	-781.58		12557	0.7794	7230	1578			10.6	Si
SLU 77	12.35	-4307	890	186.96		14111	1.09	7437	2270			2.55	Si
SLU 77	14.25	-3191	183	-893.84		14341	0.7946	7468	1661			9.09	Si
SLU 84	12.35	-3490	785	160.14		11436	1.09	7080	2161			2.75	Si
SLU 84	14.25	-2424	11	-678.16		10880	0.7959	7006	1561			137.76	Si
SLU 39	12.35	-2261	724	188.82		7409	1.09	6543	1997			2.76	Si
SLU 39	14.25	-1623	98	-546.44		9274	0.6252	6792	1189			12.12	Si
SLU 35	12.35	-3529	806	171.98		11563	1.09	7097	2166			2.69	Si
SLU 35	14.25	-2749	176	-783.06		12580	0.7803	7233	1580			8.98	Si
SLU 37	12.35	-3319	799	171.86		10876	1.09	7006	2138			2.67	Si
SLU 37	14.25	-2557	163	-764.22		12367	0.7384	7205	1490			9.15	Si
SLU 79	12.35	-4097	884	186.84		13423	1.09	7345	2242			2.54	Si
SLU 79	14.25	-2999	170	-875		14098	0.7598	7435	1582			9.32	Si

Verifica a taglio nel piano secondo D.M. 17-01-18 (N.T.C.) §7.8.2.2.2 con rottura per scorrimento in combinazioni sismiche, γM = 2

Comb.	Quota	N	V par	M	σ0	σN	l'	fvd	Vt scorr.	Vt fess.diag.	Vt,lim	c.s.	Verifica
SLV 16	12.35	-4787	-3035	-2102.73		53891	0.3172	16250	1443			0.48	No, Vu<V
SLV 16	14.25	-748	-1157	1224.35		0	0	8333	0			0	No, Vu<V
SLV 12	12.35	-2015	-1184	-1200.44		0	0	8333	0			0	No, Vu<V
SLV 12	14.25	1073	-916	841.62		0	0	8333	0			0	No, Vu<V
SLV 8	12.35	-418	822	7.29		1369	1.09	8607	2627			3.19	Si
SLV 8	14.25	1028	-303	-19.28		0	0	8333	0			0	No, Vu<V
SLV 1	12.35	-244	4071	2357.36		0	0	8333	0			0	No, Vu<V
SLV 1	14.25	-2503	1293	-2178.15		0	0	8333	0			0	No, Vu<V
SLV 2	12.35	-244	4071	2357.36		0	0	8333	0			0	No, Vu<V
SLV 2	14.25	-2503	1293	-2178.15		0	0	8333	0			0	No, Vu<V
SLV 15	12.35	-4787	-3035	-2102.73		53891	0.3172	16250	1443			0.48	No, Vu<V
SLV 15	14.25	-748	-1157	1224.35		0	0	8333	0			0	No, Vu<V
SLV 3	12.35	536	3652	1923.03		0	0	8333	0			0	No, Vu<V
SLV 3	14.25	-897	886	-1645.31		0	0	8333	0			0	No, Vu<V
SLV 7	12.35	-418	822	7.29		1369	1.09	8607	2627			3.19	Si
SLV 7	14.25	1028	-303	-19.28		0	0	8333	0			0	No, Vu<V
SLV 4	12.35	536	3652	1923.03		0	0	8333	0			0	No, Vu<V
SLV 4	14.25	-897	886	-1645.31		0	0	8333	0			0	No, Vu<V
SLV 11	12.35	-2015	-1184	-1200.44		0	0	8333	0			0	No, Vu<V
SLV 11	14.25	1073	-916	841.62		0	0	8333	0			0	No, Vu<V

Verifica a pressoflessione fuori piano D.M. 17-01-18 (N.T.C.)

quota 13.025 Wa 0.05 denominatore 8 γM = 2

Comb.	fd	Sa	σ0	N	M	Mc	Coeff.s.	Verifica
SLV 8	143750	0.52	0	-319	121.69	0	0	No, e>t/2
SLV 1	143750	0.52	0	274	121.69	0	0	No, Trazione
SLV 7	143750	0.52	0	-319	121.69	0	0	No, e>t/2
SLV 2	143750	0.52	0	274	121.69	0	0	No, Trazione
SLV 4	143750	0.52	0	852	121.69	0	0	No, Trazione
SLV 3	143750	0.52	0	852	121.69	0	0	No, Trazione
SLV 12	143750	0.52	6227	-1901	121.69	252.53	2.08	Si
SLV 11	143750	0.52	6227	-1901	121.69	252.53	2.08	Si
SLV 6	143750	0.52	7360	-2246	121.69	295.55	2.43	Si
SLV 5	143750	0.52	7360	-2246	121.69	295.55	2.43	Si

Verifica dei meccanismi locali di collasso con analisi cinematica lineare

forza di aggancio al piano = 0 quota mezzeria = 13.025 Wa = 0.05 Ta = 0.0592

Comb.	N top	N base	V orto	α0	M*	e*	a0*	aLim	Verifica
SLV 6	-1829	-5565	-199	0	327.2	0.902	0	10.02695	No
SLV 8	-514	-785	213	0	204.8	0.895	0	10.02695	No
SLV 12	-363	-107	201	0	193.3	0.906	0	10.02695	No
SLV 10	-1679	-4886	-211	0	312.5	0.899	0	10.02695	No
SLV 11	-363	-107	201	0	193.3	0.906	0	10.02695	No
SLV 7	-514	-785	213	0	204.8	0.895	0	10.02695	No
SLV 9	-1679	-4886	-211	0	312.5	0.899	0	10.02695	No
SLV 5	-1829	-5565	-199	0	327.2	0.902	0	10.02695	No
SLV 3	-1150	-3249	83	0.022	261.6	0.891	0.3645	11.09238	No
SLV 4	-1150	-3249	83	0.022	261.6	0.891	0.3645	11.09238	No

Tabella dei coefficienti di sicurezza minimi

Stato limite	Coeff.s.	Comb.	Verifica
PF_SLU	1.513	SLU 39	Si
V_SLU	2.501	SLU 83	Si
PF_SLV	0	SLV 12	No
V_SLV	0	SLV 1	No
PFFP_SLV	0	SLV 4	No
R_SLV	0	SLV 5	No

Maschio 261

Verifiche condotte secondo D.M. 17-01-18 (N.T.C.)

Dati geometrici

X ini.	Y ini.	X fin.	Y fin.	Quota i.	Quota.s	l	Sp.	h netta	h ini.	h fin.	a	a.s.,sx	a.s.,dx
-5.158	1.046	-5.158	1.365	L6	L7	0.319	0.14	3.15	3.15	3.15			

Caratteristiche del materiale

(Circolare 7 21-01-19 C8.5.I) Muratura in mattoni pieni e malta di calce LC2_Corti

fb	fk	fvk0	fmedio	τ0	fv0	μ	ϕ	fv,lim	E	G	FC
600000			345000	9000	20000	0.58	0.77	32500	320000000	128000000	1.2

Verifica a pressoflessione nel piano secondo D.M. 17-01-18 NTC §7.8.2.2.1 in combinazioni non sismiche, γM = 3

Comb.	Quota	N	M	σ0	Mu	c.s.	Verifica
SLU 54	11.45	-1360	77.03	30434	135.88	1.764	Si
SLU 54	13.55	4	-63.97	0	0	0	No, Trazione
SLU 53	11.45	-1359	76.6	30416	135.85	1.774	Si
SLU 53	13.55	7	-64.64	0	0	0	No, Trazione
SLU 59	11.45	-1382	77.02	30938	136.76	1.776	Si
SLU 59	13.55	-40	-63.62	0	0	0	No, e>l/2
SLU 55	11.45	-1291	73.11	28891	132.89	1.818	Si
SLU 55	13.55	-2	-59.34	0	0	0	No, e>l/2
SLU 61	11.45	-1266	76.89	28328	131.7	1.713	Si
SLU 61	13.55	104	-63.12	0	0	0	No, Trazione
SLU 58	11.45	-1381	76.59	30921	136.73	1.785	Si
SLU 58	13.55	-37	-64.28	0	0	0	No, e>l/2
SLU 57	11.45	-1452	81.23	32493	139.22	1.714	Si
SLU 57	13.55	-35	-67.8	0	0	0	No, e>l/2
SLU 1	11.45	-841	41.58	18824	103.17	2.481	Si
SLU 1	13.55	-62	-34.02	0	0	0	No, e>l/2
SLU 56	11.45	-1451	80.8	32475	139.19	1.723	Si
SLU 56	13.55	-32	-68.47	0	0	0	No, e>l/2
SLU 60	11.45	-1265	76.45	28310	131.66	1.722	Si
SLU 60	13.55	107	-63.78	0	0	0	No, Trazione

Verifica a pressoflessione nel piano secondo D.M. 17-01-18 NTC §7.8.2.2.1 in combinazioni sismiche, γM = 2

Comb.	Quota	N	M	σ0	Mu	c.s.	Verifica
SLV 1	11.45	592	-187.6	0	0	0	No, Trazione
SLV 1	13.55	-1306	88.84	29240	158.54	1.785	Si
SLV 2	11.45	592	-187.6	0	0	0	No, Trazione
SLV 2	13.55	-1306	88.84	29240	158.54	1.785	Si
SLV 10	11.45	2039	-290.54	0	0	0	No, Trazione
SLV 10	13.55	-2065	198.35	46234	204.85	1.033	Si
SLV 5	11.45	2386	-365.62	0	0	0	No, Trazione
SLV 5	13.55	-2445	230.83	54731	215.37	0.933	No, M>Mu
SLV 9	11.45	2039	-290.54	0	0	0	No, Trazione
SLV 9	13.55	-2065	198.35	46234	204.85	1.033	Si
SLV 4	11.45	-1293	40.07	28949	157.45	3.93	Si
SLV 4	13.55	49	-65.36	0	0	0	No, Trazione

Comb.	Quota	N	M	σ0	Mu	c.s.	Verifica
SLV 8	11.45	-3899	393.27	87271	177.76	0.452	No, M>Mu
SLV 8	13.55	2074	-283.14	0	0	0	No, Trazione
SLV 3	11.45	-1293	40.07	28949	157.45	3.93	Si
SLV 3	13.55	49	-65.36	0	0	0	No, Trazione
SLV 7	11.45	-3899	393.27	87271	177.76	0.452	No, M>Mu
SLV 7	13.55	2074	-283.14	0	0	0	No, Trazione
SLV 6	11.45	2386	-365.62	0	0	0	No, Trazione
SLV 6	13.55	-2445	230.83	54731	215.37	0.933	No, M>Mu

Verifica a taglio nel piano secondo D.M. 17-01-18 (N.T.C.) §7.8.2.2.2 con rottura per scorrimento in combinazioni non sismiche, γM = 3

Comb.	Quota	N	V par	M	σ0	σN	l'	fvd	Vt scorr.	Vt fess.diag.	Vt,lim	c.s.	Verifica
SLU 60	11.45	-1265	158	76.45		30387	0.2973	9607	400			2.53	Si
SLU 60	13.55	107	154	-63.78		0	0	5556	0			0	No, Vu<V
SLU 56	11.45	-1451	166	80.8		33259	0.3116	9990	436			2.62	Si
SLU 56	13.55	-32	161	-68.47		0	0	5556	0			0	No, Vu<V
SLU 61	11.45	-1266	160	76.89		30499	0.2964	9622	399			2.49	Si
SLU 61	13.55	104	152	-63.12		0	0	5556	0			0	No, Vu<V
SLU 1	11.45	-841	84	41.58		18824	0.3191	8065	360			4.3	Si
SLU 1	13.55	-62	82	-34.02		0	0	5556	0			0	No, Vu<V
SLU 57	11.45	-1452	169	81.23		33364	0.3108	10004	435			2.58	Si
SLU 57	13.55	-35	159	-67.8		0	0	5556	0			0	No, Vu<V
SLU 59	11.45	-1382	159	77.02		31697	0.3115	9782	427			2.69	Si
SLU 59	13.55	-40	150	-63.62		0	0	5556	0			0	No, Vu<V
SLU 58	11.45	-1381	157	76.59		31593	0.3123	9768	427			2.73	Si
SLU 58	13.55	-37	152	-64.28		0	0	5556	0			0	No, Vu<V
SLU 54	11.45	-1360	160	77.03		31461	0.3087	9750	421			2.63	Si
SLU 54	13.55	4	152	-63.97		0	0	5556	0			0	No, Vu<V
SLU 55	11.45	-1291	152	73.11		29864	0.3087	9537	412			2.71	Si
SLU 55	13.55	-2	141	-59.34		0	0	5556	0			0	No, Vu<V
SLU 53	11.45	-1359	158	76.6		31356	0.3095	9736	422			2.67	Si
SLU 53	13.55	7	154	-64.64		0	0	5556	0			0	No, Vu<V

Verifica a taglio nel piano secondo D.M. 17-01-18 (N.T.C.) §7.8.2.2.2 con rottura per scorrimento in combinazioni sismiche, γM = 2

Comb.	Quota	N	V par	M	σ0	σN	l'	fvd	Vt scorr.	Vt fess.diag.	Vt,lim	c.s.	Verifica
SLV 6	11.45	2386	-985	-365.62		0	0	8333	0			0	No, Vu<V
SLV 6	13.55	-2445	-509	230.83		89367	0.1954	16250	445			0.87	No, Vu<V
SLV 4	11.45	-1293	106	40.07		28949	0.3191	14123	631			5.93	Si
SLV 4	13.55	49	116	-65.36		0	0	8333	0			0	No, Vu<V
SLV 8	11.45	-3899	1016	393.27		158200	0.176	16250	400			0.39	No, Vu<V
SLV 8	13.55	2074	620	-283.14		0	0	8333	0			0	No, Vu<V
SLV 5	11.45	2386	-985	-365.62		0	0	8333	0			0	No, Vu<V
SLV 5	13.55	-2445	-509	230.83		89367	0.1954	16250	445			0.87	No, Vu<V
SLV 9	11.45	2039	-806	-290.54		0	0	8333	0			0	No, Vu<V
SLV 9	13.55	-2065	-416	198.35		77423	0.1906	16250	434			1.04	Si
SLV 1	11.45	592	-494	-187.6		0	0	8333	0			0	No, Vu<V
SLV 1	13.55	-1306	-223	88.84		33975	0.2746	15128	582			2.61	Si
SLV 2	11.45	592	-494	-187.6		0	0	8333	0			0	No, Vu<V
SLV 2	13.55	-1306	-223	88.84		33975	0.2746	15128	582			2.61	Si
SLV 7	11.45	-3899	1016	393.27		158200	0.176	16250	400			0.39	No, Vu<V
SLV 7	13.55	2074	620	-283.14		0	0	8333	0			0	No, Vu<V
SLV 3	11.45	-1293	106	40.07		28949	0.3191	14123	631			5.93	Si
SLV 3	13.55	49	116	-65.36		0	0	8333	0			0	No, Vu<V
SLV 10	11.45	2039	-806	-290.54		0	0	8333	0			0	No, Vu<V
SLV 10	13.55	-2065	-416	198.35		77423	0.1906	16250	434			1.04	Si

Verifica a pressoflessione fuori piano D.M. 17-01-18 (N.T.C.)

quota 13.025 Wa 0.03 denominatore 8 γM = 2

Comb.	fd	Sa	σ0	N	M	Mc	Coeff.s.	Verifica
SLV 14	143750	0.52	0	-193	19.05	0	0	No, e>t/2
SLV 7	143750	0.52	0	1027	19.05	0	0	No, Trazione
SLV 12	143750	0.52	0	1291	19.05	0	0	No, Trazione
SLV 11	143750	0.52	0	1291	19.05	0	0	No, Trazione
SLV 3	143750	0.52	0	-247	19.05	0	0	No, e>t/2
SLV 4	143750	0.52	0	-247	19.05	0	0	No, e>t/2
SLV 16	143750	0.52	0	635	19.05	0	0	No, Trazione
SLV 13	143750	0.52	0	-193	19.05	0	0	No, e>t/2
SLV 15	143750	0.52	0	635	19.05	0	0	No, Trazione
SLV 8	143750	0.52	0	1027	19.05	0	0	No, Trazione

Verifica dei meccanismi locali di collasso con analisi cinematica lineare

forza di aggancio al piano = 0 quota mezzeria = 13.025 Wa = 0.03 Ta = 0.1184

Comb.	N top	N base	V orto	α0	M*	e*	a0*	aLim	Verifica
SLV 6	185	2386	0	0	0	0	0	20.8876	No, Trazione
SLV 9	275	2039	-1	0	0	0	0	20.8876	No, Trazione
SLV 14	118	-567	-2	0	0	0	0	21.1064	No, Trazione
SLV 1	-183	592	2	0	0	0	0	21.1064	No, Trazione
SLV 13	118	-567	-2	0	0	0	0	21.1064	No, Trazione
SLV 2	-183	592	2	0	0	0	0	21.1064	No, Trazione
SLV 5	185	2386	0	0	0	0	0	20.8876	No, Trazione
SLV 10	275	2039	-1	0	0	0	0	20.8876	No, Trazione
SLV 4	-407	-1293	2	0.023	61.7	0.917	0.36526	21.1064	No
SLV 3	-407	-1293	2	0.023	61.7	0.917	0.36526	21.1064	No

Tabella dei coefficienti di sicurezza minimi

Stato limite	Coeff.s.	Comb.	Verifica
PF_SLU	0	SLU 84	No
V_SLU	0	SLU 1	No
PF_SLV	0	SLV 16	No
V_SLV	0	SLV 1	No

Stato limite	Coeff.s.	Comb.	Verifica
PFFP_SLV	0	SLV 16	No
R_SLV	0	SLV 14	No

Maschio 262

Verifiche condotte secondo D.M. 17-01-18 (N.T.C.)

Dati geometrici

X ini.	Y ini.	X fin.	Y fin.	Quota i.	Quota.s	l	Sp.	h netta	h ini.	h fin.	a	a.s.,sx	a.s.,dx
-5.158	2.165	-5.158	5.686	L6	L7	3.52	0.14	3.15	3.15	3.15			

Caratteristiche del materiale

(Circolare 7 21-01-19 C8.5.I) Muratura in mattoni pieni e malta di calce LC2_Corti

fb	fk	fvk0	fmedio	τ0	fv0	μ	ϕ	fv,lim	E	G	FC
600000			345000	9000	20000	0.58	0.77	32500	320000000	128000000	1.2

Verifica a pressoflessione nel piano secondo D.M. 17-01-18 NTC §7.8.2.2.1 in combinazioni non sismiche, γM = 3

Comb.	Quota	N	M	σ0	Mu	c.s.	Verifica
SLU 71	11.45	-7368	551.16	14950	10589.42	19.213	Si
SLU 71	13.55	-5354	1879.35	10864	8167.91	4.346	Si
SLU 72	11.45	-7365	541.7	14944	10586.1	19.542	Si
SLU 72	13.55	-5352	1887.86	10860	8165.24	4.325	Si
SLU 8	11.45	-5622	428.89	11406	8509.93	19.842	Si
SLU 8	13.55	-4226	1705.62	8574	6655.35	3.902	Si
SLU 6	11.45	-5677	468.12	11519	8579.85	18.328	Si
SLU 6	13.55	-4196	1546.12	8513	6613.36	4.277	Si
SLU 29	11.45	-6164	531.84	12507	9184.39	17.269	Si
SLU 29	13.55	-4607	1680.38	9347	7178.77	4.272	Si
SLU 9	11.45	-5619	419.42	11400	8506.16	20.281	Si
SLU 9	13.55	-4224	1714.14	8570	6652.48	3.881	Si
SLU 50	11.45	-6826	448.21	13849	9972.21	22.249	Si
SLU 50	13.55	-4973	1904.59	10090	7669.47	4.027	Si
SLU 51	11.45	-6823	438.75	13843	9968.76	22.721	Si
SLU 51	13.55	-4971	1913.11	10086	7666.73	4.007	Si
SLU 7	11.45	-5674	458.65	11513	8576.1	18.698	Si
SLU 7	13.55	-4193	1554.63	8508	6610.48	4.252	Si
SLU 30	11.45	-6161	522.37	12501	9180.77	17.575	Si
SLU 30	13.55	-4605	1688.9	9343	7175.97	4.249	Si

Verifica a pressoflessione nel piano secondo D.M. 17-01-18 NTC §7.8.2.2.1 in combinazioni sismiche, γM = 2

Comb.	Quota	N	M	σ0	Mu	c.s.	Verifica
SLV 8	11.45	-2995	6072.64	0	0	0	No, e>l/2
SLV 8	13.55	-3036	-5811.42	0	0	0	No, e>l/2
SLV 10	11.45	-6768	-5578.53	13732	10574.63	1.896	Si
SLV 10	13.55	-3133	6917.94	0	0	0	No, e>l/2
SLV 11	11.45	-3201	7529.95	0	0	0	No, e>l/2
SLV 11	13.55	-3054	-6635.5	0	0	0	No, e>l/2
SLV 2	11.45	-5072	-4148.07	10291	8176.04	1.971	Si
SLV 2	13.55	-3065	3959.74	6218	5119.79	1.293	Si
SLV 5	11.45	-6562	-7035.84	13313	10291.39	1.463	Si
SLV 5	13.55	-3114	7742.02	0	0	0	No, e>l/2
SLV 7	11.45	-2995	6072.64	0	0	0	No, e>l/2
SLV 7	13.55	-3036	-5811.42	0	0	0	No, e>l/2
SLV 1	11.45	-5072	-4148.07	10291	8176.04	1.971	Si
SLV 1	13.55	-3065	3959.74	6218	5119.79	1.293	Si
SLV 12	11.45	-3201	7529.95	0	0	0	No, e>l/2
SLV 12	13.55	-3054	-6635.5	0	0	0	No, e>l/2
SLV 9	11.45	-6768	-5578.53	13732	10574.63	1.896	Si
SLV 9	13.55	-3133	6917.94	0	0	0	No, e>l/2
SLV 6	11.45	-6562	-7035.84	13313	10291.39	1.463	Si
SLV 6	13.55	-3114	7742.02	0	0	0	No, e>l/2

Verifica a taglio nel piano secondo D.M. 17-01-18 (N.T.C.) §7.8.2.2.2 con rottura per scorrimento in combinazioni non sismiche, γM = 3

Comb.	Quota	N	V par	M	σ0	σN	l'	fvd	Vt scorr.	Vt fess.diag.	Vt,lim	c.s.	Verifica
SLU 70	11.45	-7421	280	580.93		15056	3.5204	7563	3728			13.32	Si
SLU 70	13.55	-5322	-1040	1728.36		10798	3.5204	6995	3448			3.31	Si
SLU 51	11.45	-6823	213	438.75		13843	3.5204	7401	3648			17.09	Si
SLU 51	13.55	-4971	-1032	1913.11		10086	3.5204	6900	3401			3.3	Si
SLU 50	11.45	-6826	222	448.21		13849	3.5204	7402	3648			16.44	Si
SLU 50	13.55	-4973	-1024	1904.59		10090	3.5204	6901	3401			3.32	Si
SLU 71	11.45	-7368	278	551.16		14950	3.5204	7549	3721			13.37	Si
SLU 71	13.55	-5354	-1075	1879.35		10864	3.5204	7004	3452			3.21	Si
SLU 79	11.45	-7694	340	675.63		15611	3.5204	7637	3764			11.07	Si
SLU 79	13.55	-5523	-1054	1620.69		11207	3.5204	7050	3475			3.3	Si
SLU 59	11.45	-7149	275	563.21		14504	3.5204	7489	3691			13.41	Si
SLU 59	13.55	-5140	-1011	1654.44		10429	3.5204	6946	3423			3.39	Si
SLU 78	11.45	-7746	342	705.39		15717	3.5204	7651	3771			11.04	Si
SLU 78	13.55	-5491	-1019	1469.7		11141	3.5204	7041	3470			3.4	Si
SLU 69	11.45	-7424	288	590.4		15062	3.5204	7564	3728			12.93	Si
SLU 69	13.55	-5324	-1032	1719.84		10803	3.5204	6996	3448			3.34	Si
SLU 80	11.45	-7691	332	666.16		15605	3.5204	7636	3764			11.35	Si
SLU 80	13.55	-5521	-1062	1629.2		11203	3.5204	7049	3474			3.27	Si
SLU 72	11.45	-7365	270	541.7		14944	3.5204	7548	3720			13.79	Si
SLU 72	13.55	-5352	-1083	1887.86		10860	3.5204	7004	3452			3.19	Si

Verifica a taglio nel piano secondo D.M. 17-01-18 (N.T.C.) §7.8.2.2.2 con rottura per scorrimento in combinazioni sismiche, γM = 2

Comb.	Quota	N	V par	M	σ0	σN	l'	fvd	Vt scorr.	Vt fess.diag.	Vt,lim	c.s.	Verifica
SLV 11	11.45	-3201	8926	7529.95		0	0	8333	0			0	No, Vu<V
SLV 11	13.55	-3054	6712	-6635.5		0	0	8333	0			0	No, Vu<V
SLV 1	11.45	-5072	-2984	-4148.07		12815	2.8272	10896	4313			1.45	Si
SLV 1	13.55	-3065	-4326	3959.74		15587	1.4043	11451	2251			0.52	No, Vu<V
SLV 12	11.45	-3201	8926	7529.95		0	0	8333	0			0	No, Vu<V
SLV 12	13.55	-3054	6712	-6635.5		0	0	8333	0			0	No, Vu<V
SLV 9	11.45	-6768	-8158	-5578.53		17217	2.808	11777	4630			0.57	No, Vu<V
SLV 9	13.55	-3133	-6492	6917.94		0	0	8333	0			0	No, Vu<V
SLV 6	11.45	-6562	-8530	-7035.84		22709	2.0638	12875	3720			0.44	No, Vu<V
SLV 6	13.55	-3114	-7625	7742.02		0	0	8333	0			0	No, Vu<V
SLV 7	11.45	-2995	8555	6072.64		0	0	8333	0			0	No, Vu<V
SLV 7	13.55	-3036	5579	-5811.42		0	0	8333	0			0	No, Vu<V
SLV 5	11.45	-6562	-8530	-7035.84		22709	2.0638	12875	3720			0.44	No, Vu<V
SLV 5	13.55	-3114	-7625	7742.02		0	0	8333	0			0	No, Vu<V
SLV 8	11.45	-2995	8555	6072.64		0	0	8333	0			0	No, Vu<V
SLV 8	13.55	-3036	5579	-5811.42		0	0	8333	0			0	No, Vu<V
SLV 2	11.45	-5072	-2984	-4148.07		12815	2.8272	10896	4313			1.45	Si
SLV 2	13.55	-3065	-4326	3959.74		15587	1.4043	11451	2251			0.52	No, Vu<V
SLV 10	11.45	-6768	-8158	-5578.53		17217	2.808	11777	4630			0.57	No, Vu<V
SLV 10	13.55	-3133	-6492	6917.94		0	0	8333	0			0	No, Vu<V

Verifica a pressoflessione fuori piano D.M. 17-01-18 (N.T.C.)

quota 13.025 Wa 0.03 denominatore 8 γM = 2

Comb.	fd	Sa	σ0	N	M	Mc	Coeff.s.	Verifica
SLV 8	143750	0.52	0	-2911	210.22	0	0	No, e>t/2
SLV 7	143750	0.52	0	-2911	210.22	0	0	No, e>t/2
SLV 11	143750	0.52	0	-2893	210.22	0	0	No, e>t/2
SLV 12	143750	0.52	0	-2893	210.22	0	0	No, e>t/2
SLV 15	143750	0.52	6436	-3172	210.22	210.36	1	Si
SLV 16	143750	0.52	6436	-3172	210.22	210.36	1	Si
SLV 3	143750	0.52	6559	-3233	210.22	214.15	1.02	Si
SLV 4	143750	0.52	6559	-3233	210.22	214.15	1.02	Si
SLV 14	143750	0.52	6959	-3430	210.22	226.4	1.08	Si
SLV 13	143750	0.52	6959	-3430	210.22	226.4	1.08	Si

Verifica dei meccanismi locali di collasso con analisi cinematica lineare

forza di aggancio al piano = 0 quota mezzeria = 13.025 Wa = 0.03 Ta = 0.1184

Comb.	N top	N base	V orto	α0	M*	e*	a0*	aLim	Verifica
SLV 1	-2365	-5072	-18	0.026	470.9	0.895	0.41586	21.1064	No
SLV 2	-2365	-5072	-18	0.026	470.9	0.895	0.41586	21.1064	No
SLV 5	-2822	-6562	-12	0.027	515.4	0.9	0.43258	20.8876	No
SLV 6	-2822	-6562	-12	0.027	515.4	0.9	0.43258	20.8876	No
SLV 3	-1706	-4002	-14	0.028	408.3	0.89	0.45223	21.1064	No
SLV 4	-1706	-4002	-14	0.028	408.3	0.89	0.45223	21.1064	No
SLV 15	-816	-4691	18	0.028	329.7	0.896	0.45308	21.1064	No
SLV 16	-816	-4691	18	0.028	329.7	0.896	0.45308	21.1064	No
SLV 13	-1475	-5761	14	0.028	386.9	0.889	0.45893	21.1064	No
SLV 14	-1475	-5761	14	0.028	386.9	0.889	0.45893	21.1064	No

Tabella dei coefficienti di sicurezza minimi

Stato limite	Coeff.s.	Comb.	Verifica
PF_SLU	3.881	SLU 9	Si
V_SLU	3.187	SLU 72	Si
PF_SLV	0	SLV 5	No
V_SLV	0	SLV 5	No
PFFP_SLV	0	SLV 7	No
R_SLV	0.02	SLV 1	No

Maschio 263

Verifiche condotte secondo D.M. 17-01-18 (N.T.C.)

Dati geometrici

X ini.	Y ini.	X fin.	Y fin.	Quota i.	Quota.s	l	Sp.	h netta	h ini.	h fin.	a	a.s.,sx	a.s.,dx
-5.105	5.83	-5.105	6.536	L6	L7	0.705	0.28	3.15	3.15	3.15			

Caratteristiche del materiale

(Circolare 7 21-01-19 C8.5.I) Muratura in mattoni pieni e malta di calce LC2_Corti

fb	fk	fvk0	fmedio	τ0	fv0	μ	ϕ	fv,lim	E	G	FC
600000			345000	9000	20000	0.58	0.77	32500	320000000	128000000	1.2

Verifica a pressoflessione nel piano secondo D.M. 17-01-18 NTC §7.8.2.2.1 in combinazioni non sismiche, γM = 3

Comb.	Quota	N	M	σ0	Mu	c.s.	Verifica
SLU 54	11.45	-2544	-51.6	12882	755.27	14.637	Si
SLU 54	14.6	-1701	-1748.8	0	0	0	No, e>l/2
SLU 58	11.45	-2718	-41.93	13763	796.58	19	Si
SLU 58	14.6	-2271	-2323.58	0	0	0	No, e>l/2
SLU 1	11.45	-1713	-30.99	8671	539.63	17.414	Si
SLU 1	14.6	-998	-1061.39	0	0	0	No, e>l/2
SLU 61	11.45	-2264	-62.17	11463	685.97	11.034	Si
SLU 61	14.6	-1230	-1336.12	0	0	0	No, e>l/2
SLU 55	11.45	-2472	-48.05	12515	737.71	15.353	Si
SLU 55	14.6	-1743	-1830.41	0	0	0	No, e>l/2
SLU 56	11.45	-2788	-45.43	14117	812.78	17.89	Si
SLU 56	14.6	-2225	-2243.18	0	0	0	No, e>l/2

Comb.	Quota	N	M	σ0	Mu	c.s.	Verifica
SLU 53	11.45	-2548	-51.66	12900	756.16	14.636	Si
SLU 53	14.6	-1708	-1746.97	0	0	0	No, e>l/2
SLU 60	11.45	-2267	-62.23	11481	686.91	11.038	Si
SLU 60	14.6	-1237	-1334.3	0	0	0	No, e>l/2
SLU 57	11.45	-2784	-45.37	14098	811.93	17.897	Si
SLU 57	14.6	-2217	-2245	0	0	0	No, e>l/2
SLU 59	11.45	-2714	-41.86	13744	795.71	19.009	Si
SLU 59	14.6	-2264	-2325.4	0	0	0	No, e>l/2

Verifica a pressoflessione nel piano secondo D.M. 17-01-18 NTC §7.8.2.2.1 in combinazioni sismiche, γM = 2

Comb.	Quota	N	M	σ0	Mu	c.s.	Verifica
SLV 3	11.45	-1131	41.73	5728	380.23	9.112	Si
SLV 3	14.6	-1108	-1385.03	0	0	0	No, e>l/2
SLV 9	11.45	-2138	269.92	10826	687.19	2.546	Si
SLV 9	14.6	-924	-1388.42	0	0	0	No, e>l/2
SLV 5	11.45	-1780	384.87	9014	581.46	1.511	Si
SLV 5	14.6	-945	-1624.74	0	0	0	No, e>l/2
SLV 1	11.45	-1238	262	6269	414.19	1.581	Si
SLV 1	14.6	-1044	-1622.91	0	0	0	No, e>l/2
SLV 10	11.45	-2138	269.92	10826	687.19	2.546	Si
SLV 10	14.6	-924	-1388.42	0	0	0	No, e>l/2
SLV 7	11.45	-1424	-349.36	7212	472.61	1.353	Si
SLV 7	14.6	-1159	-831.8	0	0	0	No, e>l/2
SLV 6	11.45	-1780	384.87	9014	581.46	1.511	Si
SLV 6	14.6	-945	-1624.74	0	0	0	No, e>l/2
SLV 4	11.45	-1131	41.73	5728	380.23	9.112	Si
SLV 4	14.6	-1108	-1385.03	0	0	0	No, e>l/2
SLV 8	11.45	-1424	-349.36	7212	472.61	1.353	Si
SLV 8	14.6	-1159	-831.8	0	0	0	No, e>l/2
SLV 2	11.45	-1238	262	6269	414.19	1.581	Si
SLV 2	14.6	-1044	-1622.91	0	0	0	No, e>l/2

Verifica a taglio nel piano secondo D.M. 17-01-18 (N.T.C.) §7.8.2.2.2 con rottura per scorrimento in combinazioni non sismiche, γM = 3

Comb.	Quota	N	V par	M	σ0	σN	l'	fvd	Vt scorr.	Vt fess.diag.	Vt,lim	c.s.	Verifica
SLU 54	11.45	-2544	-258	-51.6		12882	0.7053	7273	1436			5.58	Si
SLU 54	14.6	-1701	1634	-1748.8		0	0	5556	0			0	No, Vu<V
SLU 58	11.45	-2718	-200	-41.93		13763	0.7053	7391	1460			7.31	Si
SLU 58	14.6	-2271	2231	-2323.58		0	0	5556	0			0	No, Vu<V
SLU 53	11.45	-2548	-258	-51.66		12900	0.7053	7276	1437			5.56	Si
SLU 53	14.6	-1708	1634	-1746.97		0	0	5556	0			0	No, Vu<V
SLU 57	11.45	-2784	-225	-45.37		14098	0.7053	7435	1468			6.54	Si
SLU 57	14.6	-2217	2144	-2245		0	0	5556	0			0	No, Vu<V
SLU 61	11.45	-2264	-305	-62.17		11463	0.7053	7084	1399			4.59	Si
SLU 61	14.6	-1230	1202	-1336.12		0	0	5556	0			0	No, Vu<V
SLU 59	11.45	-2714	-199	-41.86		13744	0.7053	7388	1459			7.33	Si
SLU 59	14.6	-2264	2231	-2325.4		0	0	5556	0			0	No, Vu<V
SLU 56	11.45	-2788	-225	-45.43		14117	0.7053	7438	1469			6.52	Si
SLU 56	14.6	-2225	2144	-2243.18		0	0	5556	0			0	No, Vu<V
SLU 1	11.45	-1713	-149	-30.99		8671	0.7053	6712	1325			8.89	Si
SLU 1	14.6	-998	986	-1061.39		0	0	5556	0			0	No, Vu<V
SLU 55	11.45	-2472	-232	-48.05		12515	0.7053	7224	1427			6.16	Si
SLU 55	14.6	-1743	1722	-1830.41		0	0	5556	0			0	No, Vu<V
SLU 60	11.45	-2267	-306	-62.23		11481	0.7053	7086	1399			4.58	Si
SLU 60	14.6	-1237	1201	-1334.3		0	0	5556	0			0	No, Vu<V

Verifica a taglio nel piano secondo D.M. 17-01-18 (N.T.C.) §7.8.2.2.2 con rottura per scorrimento in combinazioni sismiche, γM = 2

Comb.	Quota	N	V par	M	σ0	σN	l'	fvd	Vt scorr.	Vt fess.diag.	Vt,lim	c.s.	Verifica
SLV 7	11.45	-1424	-125	-349.36		15793	0.3221	11492	1036			8.27	Si
SLV 7	14.6	-1159	2968	-831.8		0	0	8333	0			0	No, Vu<V
SLV 9	11.45	-2138	-261	269.92		11242	0.6792	10582	2012			7.7	Si
SLV 9	14.6	-924	-926	-1388.42		0	0	8333	0			0	No, Vu<V
SLV 5	11.45	-1780	309	384.87		15531	0.4094	11440	1311			4.24	Si
SLV 5	14.6	-945	-84	-1624.74		0	0	8333	0			0	No, Vu<V
SLV 8	11.45	-1424	-125	-349.36		15793	0.3221	11492	1036			8.27	Si
SLV 8	14.6	-1159	2968	-831.8		0	0	8333	0			0	No, Vu<V
SLV 6	11.45	-1780	309	384.87		15531	0.4094	11440	1311			4.24	Si
SLV 6	14.6	-945	-84	-1624.74		0	0	8333	0			0	No, Vu<V
SLV 2	11.45	-1238	822	262		10451	0.4231	10423	1235			1.5	Si
SLV 2	14.6	-1044	1966	-1622.91		0	0	8333	0			0	No, Vu<V
SLV 4	11.45	-1131	692	41.73		5728	0.7053	9479	1872			2.7	Si
SLV 4	14.6	-1108	2881	-1385.03		0	0	8333	0			0	No, Vu<V
SLV 10	11.45	-2138	-261	269.92		11242	0.6792	10582	2012			7.7	Si
SLV 10	14.6	-924	-926	-1388.42		0	0	8333	0			0	No, Vu<V
SLV 1	11.45	-1238	822	262		10451	0.4231	10423	1235			1.5	Si
SLV 1	14.6	-1044	1966	-1622.91		0	0	8333	0			0	No, Vu<V
SLV 3	11.45	-1131	692	41.73		5728	0.7053	9479	1872			2.7	Si
SLV 3	14.6	-1108	2881	-1385.03		0	0	8333	0			0	No, Vu<V

Verifica a pressoflessione fuori piano D.M. 17-01-18 (N.T.C.)

quota 13.025 Wa 0.05 denominatore 8 γM = 2

Comb.	fd	Sa	σ0	N	M	Mc	Coeff.s.	Verifica
SLV 5	143750	0.52	0	128	80.57	0	0	No, Trazione
SLV 9	143750	0.52	0	-169	80.57	0	0	No, e>t/2
SLV 2	143750	0.52	0	-194	80.57	0	0	No, e>t/2
SLV 6	143750	0.52	0	128	80.57	0	0	No, Trazione
SLV 1	143750	0.52	0	-194	80.57	0	0	No, e>t/2
SLV 10	143750	0.52	0	-169	80.57	0	0	No, e>t/2
SLV 3	143750	0.52	3887	-768	80.57	104.05	1.29	Si
SLV 4	143750	0.52	3887	-768	80.57	104.05	1.29	Si
SLV 13	143750	0.52	6006	-1186	80.57	157.89	1.96	Si

Comb.	fd	Sa	σ0	N	M	Mc	Coeff.s.	Verifica
SLV 14	143750	0.52	6006	-1186	80.57	157.89	1.96	Si

Verifica dei meccanismi locali di collasso con analisi cinematica lineare

forza di aggancio al piano = 0 quota mezzeria = 13.025 Wa = 0.05 Ta = 0.0592

Comb.	N top	N base	V orto	α0	M*	e*	a0*	aLim	Verifica
SLV 11	-1139	-1782	-163	0	207.3	0.901	0	10.02695	No
SLV 16	-1040	-2324	-132	0	197.7	0.898	0	11.09238	No
SLV 7	-1159	-1424	-140	0	209.3	0.901	0	10.02695	No
SLV 8	-1159	-1424	-140	0	209.3	0.901	0	10.02695	No
SLV 12	-1139	-1782	-163	0	207.3	0.901	0	10.02695	No
SLV 15	-1040	-2324	-132	0	197.7	0.898	0	11.09238	No
SLV 14	-975	-2431	-82	0.007	191.4	0.896	0.11253	11.09238	No
SLV 13	-975	-2431	-82	0.007	191.4	0.896	0.11253	11.09238	No
SLV 4	-1108	-1131	-56	0.026	204.3	0.9	0.41316	11.09238	No
SLV 3	-1108	-1131	-56	0.026	204.3	0.9	0.41316	11.09238	No

Tabella dei coefficienti di sicurezza minimi

Stato limite	Coeff.s.	Comb.	Verifica
PF_SLU	0	SLU 1	No
V_SLU	0	SLU 1	No
PF_SLV	0	SLV 1	No
V_SLV	0	SLV 1	No
PFFP_SLV	0	SLV 6	No
R_SLV	0	SLV 7	No

Maschio 264

Verifiche condotte secondo D.M. 17-01-18 (N.T.C.)

Dati geometrici

X ini.	Y ini.	X fin.	Y fin.	Quota i.	Quota.s	l	Sp.	h netta	h ini.	h fin.	a	a.s.,sx	a.s.,dx
-5.954	-3.248	-6.464	-3.248	L6	L7	0.51	0.28	3.15	3.15	3.15			

Caratteristiche del materiale

(Circolare 7 21-01-19 C8.5.I) Muratura in mattoni pieni e malta di calce LC2_Corti

fb	fk	fvk0	fmedio	τ0	fv0	μ	ϕ	fv,lim	E	G	FC
600000			345000	9000	20000	0.58	0.77	32500	320000000	128000000	1.2

Verifica a pressoflessione nel piano secondo D.M. 17-01-18 NTC §7.8.2.2.1 in combinazioni non sismiche, γM = 3

Comb.	Quota	N	M	σ0	Mu	c.s.	Verifica
SLU 2	13.45	-599	-20.35	4198	144.99	7.127	Si
SLU 2	14.25	-394	29.19	2756	96.95	3.322	Si
SLU 34	13.45	-1182	-31.68	8280	270.85	8.551	Si
SLU 34	14.25	-974	54.36	6823	227.64	4.188	Si
SLU 23	13.45	-752	-20.63	5265	179.32	8.691	Si
SLU 23	14.25	-544	31.24	3808	132.19	4.231	Si
SLU 10	13.45	-569	-16.93	3987	138.08	8.154	Si
SLU 10	14.25	-363	27.81	2545	89.77	3.228	Si
SLU 26	13.45	-1212	-35.09	8491	276.96	7.893	Si
SLU 26	14.25	-1004	55.74	7034	234.02	4.199	Si
SLU 13	13.45	-1030	-31.39	7213	239.4	7.627	Si
SLU 13	14.25	-824	52.3	5771	195.24	3.733	Si
SLU 55	13.45	-1401	-34.54	9812	314.25	9.098	Si
SLU 55	14.25	-1134	61.57	7941	260.99	4.239	Si
SLU 47	13.45	-1431	-37.95	10023	320.07	8.433	Si
SLU 47	14.25	-1164	62.94	8152	267.16	4.244	Si
SLU 31	13.45	-722	-17.22	5054	172.61	10.023	Si
SLU 31	14.25	-514	29.87	3597	125.2	4.192	Si
SLU 5	13.45	-1060	-34.8	7424	245.7	7.061	Si
SLU 5	14.25	-854	53.68	5982	201.82	3.76	Si

Verifica a pressoflessione nel piano secondo D.M. 17-01-18 NTC §7.8.2.2.1 in combinazioni sismiche, γM = 2

Comb.	Quota	N	M	σ0	Mu	c.s.	Verifica
SLV 5	13.45	308	36.59	0	0	0	No, Trazione
SLV 5	14.25	447	-165.95	0	0	0	No, Trazione
SLV 1	13.45	-335	100.98	0	0	0	No, e>l/2
SLV 1	14.25	-257	-420.57	0	0	0	No, e>l/2
SLV 4	13.45	-1272	92.24	8911	300.81	3.261	Si
SLV 4	14.25	-1174	-378.92	0	0	0	No, e>l/2
SLV 9	13.45	-77	-27.35	0	0	0	No, e>l/2
SLV 9	14.25	133	93.94	0	0	0	No, Trazione
SLV 3	13.45	-1272	92.24	8911	300.81	3.261	Si
SLV 3	14.25	-1174	-378.92	0	0	0	No, e>l/2
SLV 2	13.45	-335	100.98	0	0	0	No, e>l/2
SLV 2	14.25	-257	-420.57	0	0	0	No, e>l/2
SLV 6	13.45	308	36.59	0	0	0	No, Trazione
SLV 6	14.25	447	-165.95	0	0	0	No, Trazione
SLV 13	13.45	-1619	-112.14	11341	374.64	3.341	Si
SLV 13	14.25	-1305	445.74	0	0	0	No, e>l/2
SLV 10	13.45	-77	-27.35	0	0	0	No, e>l/2
SLV 10	14.25	133	93.94	0	0	0	No, Trazione
SLV 14	13.45	-1619	-112.14	11341	374.64	3.341	Si
SLV 14	14.25	-1305	445.74	0	0	0	No, e>l/2

Verifica a taglio nel piano secondo D.M. 17-01-18 (N.T.C.) §7.8.2.2.2 con rottura per scorrimento in combinazioni non sismiche, γM = 3

Comb.	Quota	N	V par	M	σ0	σN	l'	fvd	Vt scorr.	Vt fess.diag.	Vt,lim	c.s.	Verifica
SLU 80	13.45	-2339	-169	-45.48		16377	0.51	7739	1105			6.55	Si
SLU 80	14.25	-2070	-169	89.72		14493	0.51	7488	1069			6.34	Si
SLU 70	13.45	-2466	-182	-52.35		17266	0.51	7858	1122			6.16	Si
SLU 70	14.25	-2197	-182	93.75		15382	0.51	7606	1086			5.96	Si
SLU 28	13.45	-2095	-167	-49.2		14668	0.51	7511	1073			6.43	Si
SLU 28	14.25	-1887	-167	84.49		13211	0.51	7317	1045			6.26	Si
SLU 59	13.45	-2186	-166	-45.19		15311	0.51	7597	1085			6.55	Si
SLU 59	14.25	-1919	-166	87.67		13441	0.51	7348	1049			6.34	Si
SLU 72	13.45	-2369	-175	-48.89		16589	0.51	7767	1109			6.35	Si
SLU 72	14.25	-2100	-175	91.1		14704	0.51	7516	1073			6.15	Si
SLU 57	13.45	-2283	-173	-48.65		15989	0.51	7687	1098			6.34	Si
SLU 57	14.25	-2016	-173	90.32		14118	0.51	7438	1062			6.13	Si
SLU 78	13.45	-2435	-176	-48.94		17055	0.51	7830	1118			6.34	Si
SLU 78	14.25	-2166	-176	92.38		15171	0.51	7578	1082			6.14	Si
SLU 49	13.45	-2313	-179	-52.06		16200	0.51	7716	1102			6.15	Si
SLU 49	14.25	-2046	-179	91.7		14329	0.51	7466	1066			5.95	Si
SLU 7	13.45	-1942	-164	-48.91		13601	0.51	7369	1052			6.42	Si
SLU 7	14.25	-1736	-164	82.44		12158	0.51	7177	1025			6.26	Si
SLU 51	13.45	-2217	-172	-48.6		15522	0.51	7625	1089			6.35	Si
SLU 51	14.25	-1949	-172	89.05		13652	0.51	7376	1053			6.14	Si

Verifica a taglio nel piano secondo D.M. 17-01-18 (N.T.C.) §7.8.2.2.2 con rottura per scorrimento in combinazioni sismiche, γM = 2

Comb.	Quota	N	V par	M	σ0	σN	l'	fvd	Vt scorr.	Vt fess.diag.	Vt,lim	c.s.	Verifica
SLV 14	13.45	-1619	-839	-112.14		11341	0.51	10602	1514			1.8	Si
SLV 14	14.25	-1305	-899	445.74		0	0	8333	0			0	No, Vu<V
SLV 6	13.45	308	668	36.59		0	0	8333	0			0	No, Vu<V
SLV 6	14.25	447	357	-165.95		0	0	8333	0			0	No, Vu<V
SLV 9	13.45	-77	117	-27.35		0	0	8333	0			0	No, Vu<V
SLV 9	14.25	133	-176	93.94		0	0	8333	0			0	No, Vu<V
SLV 5	13.45	308	668	36.59		0	0	8333	0			0	No, Vu<V
SLV 5	14.25	447	357	-165.95		0	0	8333	0			0	No, Vu<V
SLV 13	13.45	-1619	-839	-112.14		11341	0.51	10602	1514			1.8	Si
SLV 13	14.25	-1305	-899	445.74		0	0	8333	0			0	No, Vu<V
SLV 3	13.45	-1272	731	92.24		8911	0.51	10115	1444			1.98	Si
SLV 3	14.25	-1174	791	-378.92		0	0	8333	0			0	No, Vu<V
SLV 2	13.45	-335	999	100.98		0	0	8333	0			0	No, Vu<V
SLV 2	14.25	-257	877	-420.57		0	0	8333	0			0	No, Vu<V
SLV 10	13.45	-77	117	-27.35		0	0	8333	0			0	No, Vu<V
SLV 10	14.25	133	-176	93.94		0	0	8333	0			0	No, Vu<V
SLV 1	13.45	-335	999	100.98		0	0	8333	0			0	No, Vu<V
SLV 1	14.25	-257	877	-420.57		0	0	8333	0			0	No, Vu<V
SLV 4	13.45	-1272	731	92.24		8911	0.51	10115	1444			1.98	Si
SLV 4	14.25	-1174	791	-378.92		0	0	8333	0			0	No, Vu<V

Verifica a pressoflessione fuori piano D.M. 17-01-18 (N.T.C.)

quota 13.025 Wa 0.05 denominatore 8 γM = 2

Comb.	fd	Sa	σ0	N	M	Mc	Coeff.s.	Verifica
SLV 13	143750	0.52	0	-368	56.94	0	0	No, e>t/2
SLV 10	143750	0.52	0	271	56.94	0	0	No, Trazione
SLV 14	143750	0.52	0	-368	56.94	0	0	No, e>t/2
SLV 5	143750	0.52	0	23	56.94	0	0	No, Trazione
SLV 9	143750	0.52	0	271	56.94	0	0	No, Trazione
SLV 6	143750	0.52	0	23	56.94	0	0	No, Trazione
SLV 15	143750	0.52	8156	-1165	56.94	152.16	2.67	Si
SLV 16	143750	0.52	8156	-1165	56.94	152.16	2.67	Si
SLV 2	143750	0.52	8382	-1197	56.94	156.07	2.74	Si
SLV 1	143750	0.52	8382	-1197	56.94	156.07	2.74	Si

Verifica dei meccanismi locali di collasso con analisi cinematica lineare

forza di aggancio al piano = 0 quota mezzeria = 13.025 Wa = 0.05 Ta = 0.0592

Comb.	N top	N base	V orto	α0	M*	e*	a0*	aLim	Verifica
SLV 6	712	367	-29	0	0	0	0	10.02695	No, Trazione
SLV 2	873	-361	8	0	0	0	0	11.09238	No, Trazione
SLV 3	109	-1250	33	0	0	0	0	11.09238	No, Trazione
SLV 9	-190	102	-36	0	0	0	0	10.02695	No, Trazione
SLV 10	-190	102	-36	0	0	0	0	10.02695	No, Trazione
SLV 1	873	-361	8	0	0	0	0	11.09238	No, Trazione
SLV 4	109	-1250	33	0	0	0	0	11.09238	No, Trazione
SLV 5	712	367	-29	0	0	0	0	10.02695	No, Trazione
SLV 8	-1835	-2598	54	0.028	251	0.931	0.44272	10.02695	No
SLV 7	-1835	-2598	54	0.028	251	0.931	0.44272	10.02695	No

Tabella dei coefficienti di sicurezza minimi

Stato limite	Coeff.s.	Comb.	Verifica
PF_SLU	3.228	SLU 10	Si
V_SLU	5.95	SLU 49	Si
PF_SLV	0	SLV 10	No
V_SLV	0	SLV 1	No
PFFP_SLV	0	SLV 10	No
R_SLV	0	SLV 10	No

Maschio 265

Verifiche condotte secondo D.M. 17-01-18 (N.T.C.)

Dati geometrici

X ini.	Y ini.	X fin.	Y fin.	Quota i.	Quota.s	l	Sp.	h netta	h ini.	h fin.	a	a.s.,sx	a.s.,dx
-3.223	-3.248	-5.454	-3.248	L6	L7	2.231	0.28	3.15	3.15	3.15			

Caratteristiche del materiale

(Circolare 7 21-01-19 C8.5.I) Muratura in mattoni pieni e malta di calce LC2_Corti

fb	fk	fvk0	fmedio	τ0	fv0	μ	ϕ	fv,lim	E	G	FC
600000			345000	9000	20000	0.58	0.77	32500	320000000	128000000	1.2

Verifica a pressoflessione nel piano secondo D.M. 17-01-18 NTC §7.8.2.2.1 in combinazioni non sismiche, γM = 3

Comb.	Quota	N	M	σ0	Mu	c.s.	Verifica
SLU 31	13.45	-3487	-387.03	5584	3622.98	9.361	Si
SLU 31	14.25	-2590	-267.89	4147	2741.74	10.235	Si
SLU 44	13.45	-4050	-384.03	6484	4156.99	10.825	Si
SLU 44	14.25	-2909	-393.82	4658	3059.24	7.768	Si
SLU 23	13.45	-3528	-381.94	5649	3662.19	9.588	Si
SLU 23	14.25	-2631	-298.19	4212	2782.55	9.332	Si
SLU 19	13.45	-3063	-229.4	4904	3210.49	13.995	Si
SLU 19	14.25	-2182	-226.6	3493	2328.88	10.278	Si
SLU 52	13.45	-4009	-389.11	6418	4118.71	10.585	Si
SLU 52	14.25	-2869	-363.52	4593	3018.92	8.305	Si
SLU 65	13.45	-4309	-375.79	6900	4399.09	11.706	Si
SLU 65	14.25	-3153	-363.13	5048	3298.69	9.084	Si
SLU 10	13.45	-3228	-395.27	5168	3371.51	8.53	Si
SLU 10	14.25	-2346	-298.57	3757	2496.27	8.361	Si
SLU 73	13.45	-4269	-380.87	6834	4361.28	11.451	Si
SLU 73	14.25	-3112	-332.83	4983	3258.81	9.791	Si
SLU 61	13.45	-3844	-223.24	6155	3963.33	17.753	Si
SLU 61	14.25	-2704	-291.54	4329	2855.31	9.794	Si
SLU 2	13.45	-3268	-390.19	5233	3411.18	8.742	Si
SLU 2	14.25	-2387	-328.87	3822	2537.52	7.716	Si

Verifica a pressoflessione nel piano secondo D.M. 17-01-18 NTC §7.8.2.2.1 in combinazioni sismiche, γM = 2

Comb.	Quota	N	M	σ0	Mu	c.s.	Verifica
SLV 11	13.45	-1759	1119.85	2816	1916.23	1.711	Si
SLV 11	14.25	-1757	169.33	2812	1914.03	11.304	Si
SLV 14	13.45	-2913	-1958.72	4665	3125.25	1.596	Si
SLV 14	14.25	-1799	753.35	2881	1959.53	2.601	Si
SLV 8	13.45	-1985	2035.19	3178	2156.07	1.059	Si
SLV 8	14.25	-1962	-390.66	3142	2132.32	5.458	Si
SLV 10	13.45	-3941	-1973.51	6310	4168.45	2.112	Si
SLV 10	14.25	-2192	62.71	3509	2374.21	37.86	Si
SLV 13	13.45	-2913	-1958.72	4665	3125.25	1.596	Si
SLV 13	14.25	-1799	753.35	2881	1959.53	2.601	Si
SLV 7	13.45	-1985	2035.19	3178	2156.07	1.059	Si
SLV 7	14.25	-1962	-390.66	3142	2132.32	5.458	Si
SLV 4	13.45	-3012	2020.41	4823	3227.16	1.597	Si
SLV 4	14.25	-2355	-1081.3	3770	2545.13	2.354	Si
SLV 9	13.45	-3941	-1973.51	6310	4168.45	2.112	Si
SLV 9	14.25	-2192	62.71	3509	2374.21	37.86	Si
SLV 3	13.45	-3012	2020.41	4823	3227.16	1.597	Si
SLV 3	14.25	-2355	-1081.3	3770	2545.13	2.354	Si
SLV 12	13.45	-1759	1119.85	2816	1916.23	1.711	Si
SLV 12	14.25	-1757	169.33	2812	1914.03	11.304	Si

Verifica a taglio nel piano secondo D.M. 17-01-18 (N.T.C.) §7.8.2.2.2 con rottura per scorrimento in combinazioni non sismiche, γM = 3

Comb.	Quota	N	V par	M	σ0	σN	l'	fvd	Vt scorr.	Vt fess.diag.	Vt,lim	c.s.	Verifica
SLU 53	13.45	-4642	316	38.28		7432	2.2306	6546	4089			12.93	Si
SLU 53	14.25	-3501	316	-221.36		5606	2.2306	6303	3937			12.45	Si
SLU 60	13.45	-3623	281	28.83		5801	2.2306	6329	3953			14.04	Si
SLU 60	14.25	-2483	281	-203.06		3975	2.2306	6086	3801			13.5	Si
SLU 66	13.45	-4942	335	51.6		7913	2.2306	6611	4129			12.34	Si
SLU 66	14.25	-3786	335	-220.97		6062	2.2306	6364	3975			11.87	Si
SLU 43	13.45	-3681	345	36.1		5894	2.2306	6341	3961			11.49	Si
SLU 43	14.25	-2541	345	-246.34		4069	2.2306	6098	3809			11.05	Si
SLU 69	13.45	-5534	295	66.38		8860	2.2306	6737	4208			14.24	Si
SLU 69	14.25	-4378	295	-174.73		7009	2.2306	6490	4054			13.72	Si
SLU 45	13.45	-4682	360	43.36		7497	2.2306	6555	4094			11.36	Si
SLU 45	14.25	-3542	360	-251.66		5671	2.2306	6312	3942			10.94	Si
SLU 74	13.45	-4901	290	46.52		7848	2.2306	6602	4123			14.19	Si
SLU 74	14.25	-3745	290	-190.68		5996	2.2306	6355	3969			13.66	Si
SLU 48	13.45	-5274	321	58.14		8444	2.2306	6681	4173			13	Si
SLU 48	14.25	-4134	321	-205.42		6619	2.2306	6438	4021			12.52	Si
SLU 64	13.45	-3941	319	44.34		6310	2.2306	6397	3995			12.52	Si
SLU 64	14.25	-2785	319	-215.66		4459	2.2306	6150	3841			12.04	Si
SLU 3	13.45	-3901	274	37.2		6246	2.2306	6388	3990			14.56	Si
SLU 3	14.25	-3020	274	-186.72		4835	2.2306	6200	3873			14.13	Si

Verifica a taglio nel piano secondo D.M. 17-01-18 (N.T.C.) §7.8.2.2.2 con rottura per scorrimento in combinazioni sismiche, γM = 2

Comb.	Quota	N	V par	M	σ0	σN	l'	fvd	Vt scorr.	Vt fess.diag.	Vt,lim	c.s.	Verifica
SLV 3	13.45	-3012	3231	2020.41		8066	1.3339	9947	3715			1.15	Si
SLV 3	14.25	-2355	2714	-1081.3		4273	1.9683	9188	5064			1.87	Si
SLV 2	13.45	-3667	2469	1092.4		5871	2.2306	9508	5938			2.41	Si
SLV 2	14.25	-2485	1939	-1113.28		4433	2.002	9220	5168			2.67	Si
SLV 1	13.45	-3667	2469	1092.4		5871	2.2306	9508	5938			2.41	Si
SLV 1	14.25	-2485	1939	-1113.28		4433	2.002	9220	5168			2.67	Si
SLV 15	13.45	-2259	-1992	-1030.72		4080	1.9769	9149	5065			2.54	Si
SLV 15	14.25	-1669	-1462	785.33		3081	1.9342	8950	4847			3.31	Si
SLV 4	13.45	-3012	3231	2020.41		8066	1.3339	9947	3715			1.15	Si
SLV 4	14.25	-2355	2714	-1081.3		4273	1.9683	9188	5064			1.87	Si

Comb.	Quota	N	V par	M	σ0	σN	l'	fvd	Vt scorr.	Vt fess.diag.	Vt,lim	c.s.	Verifica
SLV 7	13.45	-1985	2292	2035.19		26280	0.2697	13589	1026			0.45	No, Vu<V
SLV 7	14.25	-1962	2156	-390.66		3142	2.2306	8962	5597			2.6	Si
SLV 13	13.45	-2913	-2754	-1958.72		7829	1.329	9899	3684			1.34	Si
SLV 13	14.25	-1799	-2237	753.35		3075	2.0899	8948	5236			2.34	Si
SLV 8	13.45	-1985	2292	2035.19		26280	0.2697	13589	1026			0.45	No, Vu<V
SLV 8	14.25	-1962	2156	-390.66		3142	2.2306	8962	5597			2.6	Si
SLV 14	13.45	-2913	-2754	-1958.72		7829	1.329	9899	3684			1.34	Si
SLV 14	14.25	-1799	-2237	753.35		3075	2.0899	8948	5236			2.34	Si
SLV 16	13.45	-2259	-1992	-1030.72		4080	1.9769	9149	5065			2.54	Si
SLV 16	14.25	-1669	-1462	785.33		3081	1.9342	8950	4847			3.31	Si

Verifica a pressoflessione fuori piano D.M. 17-01-18 (N.T.C.)

quota 13.025 Wa 0.05 denominatore 8 γM = 2

Comb.	fd	Sa	σ0	N	M	Mc	Coeff.s.	Verifica
SLV 11	143750	0.52	0	-1655	249.02	0	0	No, e>t/2
SLV 4	143750	0.52	0	-1550	249.02	0	0	No, e>t/2
SLV 7	143750	0.52	0	-1027	249.02	0	0	No, e>t/2
SLV 3	143750	0.52	0	-1550	249.02	0	0	No, e>t/2
SLV 12	143750	0.52	0	-1655	249.02	0	0	No, e>t/2
SLV 8	143750	0.52	0	-1027	249.02	0	0	No, e>t/2
SLV 1	143750	0.52	4207	-2628	249.02	355.23	1.43	Si
SLV 2	143750	0.52	4207	-2628	249.02	355.23	1.43	Si
SLV 15	143750	0.52	5838	-3646	249.02	486.06	1.95	Si
SLV 16	143750	0.52	5838	-3646	249.02	486.06	1.95	Si

Verifica dei meccanismi locali di collasso con analisi cinematica lineare

forza di aggancio al piano = 0 quota mezzeria = 13.025 Wa = 0.05 Ta = 0.0592

Comb.	N top	N base	V orto	α0	M*	e*	a0*	aLim	Verifica
SLV 9	-1885	-6920	-110	0.036	491.7	0.889	0.58494	10.02695	No
SLV 10	-1885	-6920	-110	0.036	491.7	0.889	0.58494	10.02695	No
SLV 6	-1919	-6475	-102	0.038	494.8	0.889	0.62468	10.02695	No
SLV 5	-1919	-6475	-102	0.038	494.8	0.889	0.62468	10.02695	No
SLV 14	-1402	-6207	-63	0.049	448.6	0.89	0.80471	11.09238	No
SLV 13	-1402	-6207	-63	0.049	448.6	0.89	0.80471	11.09238	No
SLV 8	-651	-2955	62	0.051	389.1	0.911	0.82136	10.02695	No
SLV 7	-651	-2955	62	0.051	389.1	0.911	0.82136	10.02695	No
SLV 2	-1514	-4724	-34	0.058	458.4	0.889	0.9467	11.09238	No
SLV 1	-1514	-4724	-34	0.058	458.4	0.889	0.9467	11.09238	No

Tabella dei coefficienti di sicurezza minimi

Stato limite	Coeff.s.	Comb.	Verifica
PF_SLU	7.716	SLU 2	Si
V_SLU	10.939	SLU 45	Si
PF_SLV	1.059	SLV 7	Si
V_SLV	0.448	SLV 7	No
PFFP_SLV	0	SLV 3	No
R_SLV	0.058	SLV 9	No

Maschio 266

Verifiche condotte secondo D.M. 17-01-18 (N.T.C.)

Dati geometrici

X ini.	Y ini.	X fin.	Y fin.	Quota i.	Quota.s	l	Sp.	h netta	h ini.	h fin.	a	a.s.,sx	a.s.,dx
-0.134	-3.248	-2.223	-3.248	L6	L7	2.089	0.28	3.15	3.15	3.15			

Caratteristiche del materiale

(Circolare 7 21-01-19 C8.5.I) Muratura in mattoni pieni e malta di calce LC2_Corti

fb	fk	fvk0	fmedio	τ0	fv0	μ	ϕ	fv,lim	E	G	FC
600000			345000	9000	20000	0.58	0.77	32500	320000000	128000000	1.2

Verifica a pressoflessione nel piano secondo D.M. 17-01-18 NTC §7.8.2.2.1 in combinazioni non sismiche, γM = 3

Comb.	Quota	N	M	σ0	Mu	c.s.	Verifica
SLU 83	12.35	-5494	-641.06	9391	5077.58	7.921	Si
SLU 83	14.25	-3863	-61.56	6603	3707.93	60.238	Si
SLU 81	12.35	-5028	-587.15	8594	4697.88	8.001	Si
SLU 81	14.25	-3349	-133.87	5725	3252.88	24.298	Si
SLU 20	12.35	-4214	-485.54	7203	4012.43	8.264	Si
SLU 20	14.25	-2958	-41.94	5056	2897.94	69.092	Si
SLU 41	12.35	-4381	-654.97	7488	4155.6	6.345	Si
SLU 41	14.25	-3279	-53.98	5604	3189.3	59.079	Si
SLU 18	12.35	-3747	-431.63	6405	3606.55	8.356	Si
SLU 18	14.25	-2444	-114.26	4178	2422.53	21.201	Si
SLU 35	12.35	-5169	-569.59	8837	4814.45	8.453	Si
SLU 35	14.25	-4118	102.21	7040	3930.27	38.453	Si
SLU 32	12.35	-4703	-515.67	8039	4428.12	8.587	Si
SLU 32	14.25	-3605	29.89	6162	3480.97	116.46	Si
SLU 37	12.35	-4894	-623.58	8365	4587.15	7.356	Si
SLU 37	14.25	-3753	40.91	6415	3611.38	88.266	Si
SLU 42	12.35	-4570	-504.43	7811	4315.94	8.556	Si
SLU 42	14.25	-3242	65.17	5542	3156.57	48.435	Si
SLU 39	12.35	-3914	-601.06	6691	3753.14	6.244	Si
SLU 39	14.25	-2765	-126.3	4727	2721.11	21.544	Si

Verifica a pressoflessione nel piano secondo D.M. 17-01-18 NTC §7.8.2.2.1 in combinazioni sismiche, γM = 2

Comb.	Quota	N	M	σ0	Mu	c.s.	Verifica
SLV 1	12.35	-5242	957.59	8961	5074.73	5.299	Si
SLV 1	14.25	-1942	-863.16	3319	1973.18	2.286	Si
SLV 15	12.35	-2595	-1462.71	4436	2612.66	1.786	Si
SLV 15	14.25	-2921	748.18	4993	2926.59	3.912	Si
SLV 2	12.35	-5242	957.59	8961	5074.73	5.299	Si
SLV 2	14.25	-1942	-863.16	3319	1973.18	2.286	Si
SLV 16	12.35	-2595	-1462.71	4436	2612.66	1.786	Si
SLV 16	14.25	-2921	748.18	4993	2926.59	3.912	Si
SLV 6	12.35	-6092	904.49	10414	5821.79	6.437	Si
SLV 6	14.25	-2300	-779.24	3932	2325.65	2.985	Si
SLV 5	12.35	-6092	904.49	10414	5821.79	6.437	Si
SLV 5	14.25	-2300	-779.24	3932	2325.65	2.985	Si
SLV 11	12.35	-1745	-1409.61	2983	1778.72	1.262	Si
SLV 11	14.25	-2562	664.25	4380	2580.64	3.885	Si
SLV 8	12.35	-2188	-840.57	3740	2215.79	2.636	Si
SLV 8	14.25	-2265	275.8	3872	2291.39	8.308	Si
SLV 12	12.35	-1745	-1409.61	2983	1778.72	1.262	Si
SLV 12	14.25	-2562	664.25	4380	2580.64	3.885	Si
SLV 7	12.35	-2188	-840.57	3740	2215.79	2.636	Si
SLV 7	14.25	-2265	275.8	3872	2291.39	8.308	Si

Verifica a taglio nel piano secondo D.M. 17-01-18 (N.T.C.) §7.8.2.2.2 con rottura per scorrimento in combinazioni non sismiche, γM = 3

Comb.	Quota	N	V par	M	σ0	σN	I'	fvd	Vt scorr.	Vt fess.diag.	Vt,lim	c.s.	Verifica
SLU 83	12.35	-5494	-889	-641.06		9391	2.0893	6808	3983			4.48	Si
SLU 83	14.25	-3863	-945	-61.56		6603	2.0893	6436	3765			3.98	Si
SLU 32	12.35	-4703	-831	-515.67		8039	2.0893	6627	3877			4.67	Si
SLU 32	14.25	-3605	-877	29.89		6162	2.0893	6377	3731			4.25	Si
SLU 41	12.35	-4381	-857	-654.97		7488	2.0893	6554	3834			4.47	Si
SLU 41	14.25	-3279	-906	-53.98		5604	2.0893	6303	3687			4.07	Si
SLU 81	12.35	-5028	-801	-587.15		8594	2.0893	6701	3920			4.9	Si
SLU 81	14.25	-3349	-843	-133.87		5725	2.0893	6319	3697			4.39	Si
SLU 79	12.35	-6007	-897	-609.67		10268	2.0893	6925	4051			4.51	Si
SLU 79	14.25	-4337	-967	33.34		7413	2.0893	6544	3828			3.96	Si
SLU 78	12.35	-6472	-821	-405.14		11063	2.0893	7031	4113			5.01	Si
SLU 78	14.25	-4666	-864	213.79		7976	2.0893	6619	3872			4.48	Si
SLU 77	12.35	-6283	-951	-555.68		10740	2.0893	6988	4088			4.3	Si
SLU 77	14.25	-4702	-1019	94.64		8038	2.0893	6627	3877			3.81	Si
SLU 74	12.35	-5816	-863	-501.77		9942	2.0893	6881	4026			4.67	Si
SLU 74	14.25	-4189	-916	22.32		7160	2.0893	6510	3809			4.16	Si
SLU 35	12.35	-5169	-919	-569.59		8837	2.0893	6734	3939			4.29	Si
SLU 35	14.25	-4118	-979	102.21		7040	2.0893	6494	3799			3.88	Si
SLU 37	12.35	-4894	-865	-623.58		8365	2.0893	6671	3902			4.51	Si
SLU 37	14.25	-3753	-928	40.91		6415	2.0893	6411	3750			4.04	Si

Verifica a taglio nel piano secondo D.M. 17-01-18 (N.T.C.) §7.8.2.2.2 con rottura per scorrimento in combinazioni sismiche, γM = 2

Comb.	Quota	N	V par	M	σ0	σN	I'	fvd	Vt scorr.	Vt fess.diag.	Vt,lim	c.s.	Verifica
SLV 1	12.35	-5242	1853	957.59		8961	2.0893	10126	5923			3.2	Si
SLV 1	14.25	-1942	-137	-863.16		3852	1.8002	9104	4589			33.52	Si
SLV 13	12.35	-3766	-1986	-939.19		6438	2.0893	9621	5628			2.83	Si
SLV 13	14.25	-2931	-177	431.67		5011	2.0893	9336	5461			30.83	Si
SLV 8	12.35	-2188	-1037	-840.57		3944	1.9815	9122	5061			4.88	Si
SLV 8	14.25	-2265	-1439	275.8		3872	2.0893	9108	5328			3.7	Si
SLV 16	12.35	-2595	-2700	-1462.71		6423	1.4431	9618	3886			1.44	Si
SLV 16	14.25	-2921	-772	748.18		4993	2.0893	9332	5459			7.07	Si
SLV 15	12.35	-2595	-2700	-1462.71		6423	1.4431	9618	3886			1.44	Si
SLV 15	14.25	-2921	-772	748.18		4993	2.0893	9332	5459			7.07	Si
SLV 14	12.35	-3766	-1986	-939.19		6438	2.0893	9621	5628			2.83	Si
SLV 14	14.25	-2931	-177	431.67		5011	2.0893	9336	5461			30.83	Si
SLV 7	12.35	-2188	-1037	-840.57		3944	1.9815	9122	5061			4.88	Si
SLV 7	14.25	-2265	-1439	275.8		3872	2.0893	9108	5328			3.7	Si
SLV 11	12.35	-1745	-2189	-1409.61		8767	0.711	10087	2008			0.92	No, Vu<V
SLV 11	14.25	-2562	-1451	664.25		4380	2.0893	9209	5387			3.71	Si
SLV 12	12.35	-1745	-2189	-1409.61		8767	0.711	10087	2008			0.92	No, Vu<V
SLV 12	14.25	-2562	-1451	664.25		4380	2.0893	9209	5387			3.71	Si
SLV 2	12.35	-5242	1853	957.59		8961	2.0893	10126	5923			3.2	Si
SLV 2	14.25	-1942	-137	-863.16		3852	1.8002	9104	4589			33.52	Si

Verifica a pressoflessione fuori piano D.M. 17-01-18 (N.T.C.)

quota 13.025 Wa 0.05 denominatore 8 γM = 2

Comb.	fd	Sa	σ0	N	M	Mc	Coeff.s.	Verifica
SLV 11	143750	0.52	3573	-2090	233.24	284.04	1.22	Si
SLV 12	143750	0.52	3573	-2090	233.24	284.04	1.22	Si
SLV 16	143750	0.52	4160	-2434	233.24	329.12	1.41	Si
SLV 15	143750	0.52	4160	-2434	233.24	329.12	1.41	Si
SLV 7	143750	0.52	4199	-2457	233.24	332.12	1.42	Si
SLV 8	143750	0.52	4199	-2457	233.24	332.12	1.42	Si
SLV 13	143750	0.52	5291	-3095	233.24	414.56	1.78	Si
SLV 14	143750	0.52	5291	-3095	233.24	414.56	1.78	Si
SLV 4	143750	0.52	6250	-3656	233.24	485.68	2.08	Si
SLV 3	143750	0.52	6250	-3656	233.24	485.68	2.08	Si

Verifica dei meccanismi locali di collasso con analisi cinematica lineare

forza di aggancio al piano = 0 quota mezzeria = 13.025 Wa = 0.05 Ta = 0.0592

Comb.	N top	N base	V orto	α0	M*	e*	a0*	aLim	Verifica
SLV 1	-1169	-3996	-113	0.03	407.9	0.892	0.49557	11.09238	No
SLV 2	-1169	-3996	-113	0.03	407.9	0.892	0.49557	11.09238	No
SLV 3	-1464	-2594	-97	0.037	433.4	0.889	0.60331	11.09238	No
SLV 4	-1464	-2594	-97	0.037	433.4	0.889	0.60331	11.09238	No

Comb.	N top	N base	V orto	α0	M*	e*	a0*	aLim	Verifica
SLV 5	-1185	-6300	-81	0.042	409.2	0.892	0.6849	10.02695	No
SLV 6	-1185	-6300	-81	0.042	409.2	0.892	0.6849	10.02695	No
SLV 15	-2491	-4506	50	0.05	528.6	0.893	0.81494	11.09238	No
SLV 16	-2491	-4506	50	0.05	528.6	0.893	0.81494	11.09238	No
SLV 13	-2196	-5908	34	0.055	500.6	0.891	0.8923	11.09238	No
SLV 14	-2196	-5908	34	0.055	500.6	0.891	0.8923	11.09238	No

Tabella dei coefficienti di sicurezza minimi

Stato limite	Coeff.s.	Comb.	Verifica
PF_SLU	6.244	SLU 39	Si
V_SLU	3.805	SLU 77	Si
PF_SLV	1.262	SLV 11	Si
V_SLV	0.917	SLV 11	No
PFFP_SLV	1.218	SLV 11	Si
R_SLV	0.045	SLV 1	No

Maschio 267

Verifiche condotte secondo D.M. 17-01-18 (N.T.C.)

Dati geometrici

X ini.	Y ini.	X fin.	Y fin.	Quota i.	Quota.s	l	Sp.	h netta	h ini.	h fin.	a	a.s.,sx	a.s.,dx
-2.889	5.83	-5.105	5.83	L6	L7	2.216	0.28	3.15	3.15	3.15			

Caratteristiche del materiale

(Circolare 7 21-01-19 C8.5.I) Muratura in mattoni pieni e malta di calce LC2_Corti

fb	fk	fvk0	fmedio	τ0	fv0	μ	ϕ	fv,lim	E	G	FC
600000			345000	9000	20000	0.58	0.77	32500	320000000	128000000	1.2

Verifica a pressoflessione nel piano secondo D.M. 17-01-18 NTC §7.8.2.2.1 in combinazioni non sismiche, γM = 3

Comb.	Quota	N	M	σ0	Mu	c.s.	Verifica
SLU 40	12.35	-5562	-844.49	8965	5484.83	6.495	Si
SLU 40	14.25	-2523	743.47	4065	2655.4	3.572	Si
SLU 60	12.35	-6499	-875.47	10475	6275.21	7.168	Si
SLU 60	14.25	-2755	733.84	4440	2885.9	3.933	Si
SLU 42	12.35	-6544	-902.35	10547	6312.04	6.995	Si
SLU 42	14.25	-3441	899.45	5546	3553.2	3.95	Si
SLU 61	12.35	-6504	-883.89	10483	6279.22	7.104	Si
SLU 61	14.25	-2762	740.45	4451	2892.52	3.906	Si
SLU 19	12.35	-5119	-734.5	8250	5097	6.939	Si
SLU 19	14.25	-2195	632.05	3537	2326.29	3.681	Si
SLU 81	12.35	-6943	-985.46	11190	6636.17	6.734	Si
SLU 81	14.25	-3082	845.25	4968	3206.97	3.794	Si
SLU 18	12.35	-5114	-726.07	8242	5092.7	7.014	Si
SLU 18	14.25	-2188	625.44	3527	2319.51	3.709	Si
SLU 39	12.35	-5558	-836.07	8957	5480.62	6.555	Si
SLU 39	14.25	-2516	736.85	4055	2648.72	3.595	Si
SLU 31	12.35	-5569	-819.4	8976	5490.82	6.701	Si
SLU 31	14.25	-2549	706.84	4109	2682.27	3.795	Si
SLU 82	12.35	-6948	-993.89	11198	6640.08	6.681	Si
SLU 82	14.25	-3089	851.86	4979	3213.5	3.772	Si

Verifica a pressoflessione nel piano secondo D.M. 17-01-18 NTC §7.8.2.2.1 in combinazioni sismiche, γM = 2

Comb.	Quota	N	M	σ0	Mu	c.s.	Verifica
SLV 11	12.35	-10545	-2196.08	16995	10058.38	4.58	Si
SLV 11	14.25	-3104	-266.39	5003	3298.83	12.384	Si
SLV 6	12.35	44	844.88	0	0	0	No, Trazione
SLV 6	14.25	-1579	1362.08	2545	1713.1	1.258	Si
SLV 1	12.35	-1751	341.48	2822	1895.02	5.549	Si
SLV 1	14.25	-1200	855.76	1934	1308.6	1.529	Si
SLV 3	12.35	-4549	-459.85	7332	4738.08	10.303	Si
SLV 3	14.25	-1477	379.81	2381	1604.74	4.225	Si
SLV 5	12.35	44	844.88	0	0	0	No, Trazione
SLV 5	14.25	-1579	1362.08	2545	1713.1	1.258	Si
SLV 9	12.35	-1216	475.04	1960	1326.02	2.791	Si
SLV 9	14.25	-2181	1320.11	3515	2346.9	1.778	Si
SLV 10	12.35	-1216	475.04	1960	1326.02	2.791	Si
SLV 10	14.25	-2181	1320.11	3515	2346.9	1.778	Si
SLV 12	12.35	-10545	-2196.08	16995	10058.38	4.58	Si
SLV 12	14.25	-3104	-266.39	5003	3298.83	12.384	Si
SLV 2	12.35	-1751	341.48	2822	1895.02	5.549	Si
SLV 2	14.25	-1200	855.76	1934	1308.6	1.529	Si
SLV 4	12.35	-4549	-459.85	7332	4738.08	10.303	Si
SLV 4	14.25	-1477	379.81	2381	1604.74	4.225	Si

Verifica a taglio nel piano secondo D.M. 17-01-18 (N.T.C.) §7.8.2.2.2 con rottura per scorrimento in combinazioni non sismiche, γM = 3

Comb.	Quota	N	V par	M	σ0	σN	l'	fvd	Vt scorr.	Vt fess.diag.	Vt,lim	c.s.	Verifica
SLU 82	12.35	-6948	-1589	-993.89		11198	2.216	7049	4373			2.75	Si
SLU 82	14.25	-3089	-1438	851.86		4979	2.216	6219	3859			2.68	Si
SLU 79	12.35	-8910	-1854	-1070.45		14361	2.216	7470	4635			2.5	Si
SLU 79	14.25	-4942	-1634	1116.18		7965	2.216	6618	4106			2.51	Si
SLU 71	12.35	-8919	-1741	-998.79		14375	2.216	7472	4636			2.66	Si
SLU 71	14.25	-4995	-1526	1020.43		8050	2.216	6629	4113			2.7	Si
SLU 77	12.35	-9189	-1787	-1144.36		14810	2.216	7530	4672			2.61	Si
SLU 77	14.25	-5279	-1571	984		8508	2.216	6690	4151			2.64	Si
SLU 80	12.35	-8915	-1861	-1078.88		14369	2.216	7471	4636			2.49	Si
SLU 80	14.25	-4949	-1641	1122.79		7976	2.216	6619	4107			2.5	Si

Comb.	Quota	N	V par	M	σ0	σN	l'	fvd	Vt scorr.	Vt fess.diag.	Vt,lim	c.s.	Verifica
SLU 72	12.35	-8924	-1748	-1007.22		14382	2.216	7473	4637			2.65	Si
SLU 72	14.25	-5001	-1533	1027.04		8061	2.216	6630	4114			2.68	Si
SLU 84	12.35	-7930	-1749	-1051.74		12780	2.216	7260	4504			2.58	Si
SLU 84	14.25	-4008	-1563	1007.85		6459	2.216	6417	3981			2.55	Si
SLU 76	12.35	-7937	-1705	-1026.64		12792	2.216	7261	4505			2.64	Si
SLU 76	14.25	-4035	-1521	971.22		6503	2.216	6423	3985			2.62	Si
SLU 78	12.35	-9194	-1793	-1152.78		14818	2.216	7531	4673			2.61	Si
SLU 78	14.25	-5286	-1578	990.62		8519	2.216	6691	4152			2.63	Si
SLU 83	12.35	-7925	-1742	-1043.31		12773	2.216	7259	4504			2.58	Si
SLU 83	14.25	-4001	-1556	1001.23		6449	2.216	6415	3981			2.56	Si

Verifica a taglio nel piano secondo D.M. 17-01-18 (N.T.C.) §7.8.2.2.2 con rottura per scorrimento in combinazioni sismiche, γM = 2

Comb.	Quota	N	V par	M	σ0	σN	l'	fvd	Vt scorr.	Vt fess.diag.	Vt,lim	c.s.	Verifica
SLV 13	12.35	-5952	-1714	-891.34		9592	2.216	10252	6361			3.71	Si
SLV 13	14.25	-3206	-675	715.88		5168	2.216	9367	5812			8.61	Si
SLV 7	12.35	-9285	-3554	-1826.23		14964	2.216	11326	7027			1.98	Si
SLV 7	14.25	-2503	-2681	-224.42		4033	2.216	9140	5671			2.11	Si
SLV 12	12.35	-10545	-4454	-2196.08		16995	2.216	11732	7280			1.63	Si
SLV 12	14.25	-3104	-2817	-266.39		5003	2.216	9334	5791			2.06	Si
SLV 11	12.35	-10545	-4454	-2196.08		16995	2.216	11732	7280			1.63	Si
SLV 11	14.25	-3104	-2817	-266.39		5003	2.216	9334	5791			2.06	Si
SLV 16	12.35	-8750	-3463	-1692.67		14102	2.216	11154	6921			2	Si
SLV 16	14.25	-3483	-1737	239.93		5614	2.216	9456	5867			3.38	Si
SLV 8	12.35	-9285	-3554	-1826.23		14964	2.216	11326	7027			1.98	Si
SLV 8	14.25	-2503	-2681	-224.42		4033	2.216	9140	5671			2.11	Si
SLV 15	12.35	-8750	-3463	-1692.67		14102	2.216	11154	6921			2	Si
SLV 15	14.25	-3483	-1737	239.93		5614	2.216	9456	5867			3.38	Si
SLV 6	12.35	44	2277	844.88		0	0	8333	0			0	No, Vu<V
SLV 6	14.25	-1579	858	1362.08		7661	0.7361	9866	2033			2.37	Si
SLV 5	12.35	44	2277	844.88		0	0	8333	0			0	No, Vu<V
SLV 5	14.25	-1579	858	1362.08		7661	0.7361	9866	2033			2.37	Si
SLV 14	12.35	-5952	-1714	-891.34		9592	2.216	10252	6361			3.71	Si
SLV 14	14.25	-3206	-675	715.88		5168	2.216	9367	5812			8.61	Si

Verifica a pressoflessione fuori piano D.M. 17-01-18 (N.T.C.)

quota 13.025 Wa 0.05 denominatore 8 γM = 2

Comb.	fd	Sa	σ0	N	M	Mc	Coeff.s.	Verifica
SLV 9	143750	0.52	0	-1430	247.38	0	0	No, e>t/2
SLV 6	143750	0.52	0	-277	247.38	0	0	No, e>t/2
SLV 10	143750	0.52	0	-1430	247.38	0	0	No, e>t/2
SLV 2	143750	0.52	0	-1380	247.38	0	0	No, e>t/2
SLV 5	143750	0.52	0	-277	247.38	0	0	No, e>t/2
SLV 1	143750	0.52	0	-1380	247.38	0	0	No, e>t/2
SLV 4	143750	0.52	5607	-3479	247.38	464.72	1.88	Si
SLV 3	143750	0.52	5607	-3479	247.38	464.72	1.88	Si
SLV 13	143750	0.52	8420	-5224	247.38	681.01	2.75	Si
SLV 14	143750	0.52	8420	-5224	247.38	681.01	2.75	Si

Verifica dei meccanismi locali di collasso con analisi cinematica lineare

forza di aggancio al piano = 0 quota mezzeria = 13.025 Wa = 0.05 Ta = 0.0592

Comb.	N top	N base	V orto	α0	M*	e*	a0*	aLim	Verifica
SLV 12	-2011	-9425	189	0.015	501.2	0.889	0.24742	10.02695	No
SLV 11	-2011	-9425	189	0.015	501.2	0.889	0.24742	10.02695	No
SLV 16	-2032	-7707	138	0.029	503.2	0.889	0.46704	11.09238	No
SLV 15	-2032	-7707	138	0.029	503.2	0.889	0.46704	11.09238	No
SLV 8	-1942	-8597	146	0.026	494.8	0.889	0.42651	10.02695	No
SLV 7	-1942	-8597	146	0.026	494.8	0.889	0.42651	10.02695	No
SLV 6	-1771	-924	-140	0.027	479.2	0.889	0.44198	10.02695	No
SLV 5	-1771	-924	-140	0.027	479.2	0.889	0.44198	10.02695	No
SLV 1	-1749	-2643	-89	0.041	477.3	0.889	0.67487	11.09238	No
SLV 2	-1749	-2643	-89	0.041	477.3	0.889	0.67487	11.09238	No

Tabella dei coefficienti di sicurezza minimi

Stato limite	Coeff.s.	Comb.	Verifica
PF_SLU	3.572	SLU 40	Si
V_SLU	2.491	SLU 80	Si
PF_SLV	0	SLV 6	No
V_SLV	0	SLV 5	No
PFFP_SLV	0	SLV 1	No
R_SLV	0.025	SLV 11	No

Maschio 268

Verifiche condotte secondo D.M. 17-01-18 (N.T.C.)

Dati geometrici

X ini.	Y ini.	X fin.	Y fin.	Quota i.	Quota.s	l	Sp.	h netta	h ini.	h fin.	a	a.s.,sx	a.s.,dx
-0.134	5.83	-1.889	5.83	L6	L7	1.755	0.28	3.15	3.15	3.15			

Caratteristiche del materiale

(Circolare 7 21-01-19 C8.5.I) Muratura in mattoni pieni e malta di calce LC2_Corti

fb	fk	fvk0	fmedio	τ0	fv0	μ	ϕ	fv,lim	E	G	FC
600000			345000	9000	20000	0.58	0.77	32500	320000000	128000000	1.2

Verifica a pressoflessione nel piano secondo D.M. 17-01-18 NTC §7.8.2.2.1 in combinazioni non sismiche, γM = 3

Comb.	Quota	N	M	σ0	Mu	c.s.	Verifica
SLU 40	12.35	-2887	-1451.17	5873	2350.92	1.62	Si
SLU 40	14.25	-2805	291.55	5707	2289.55	7.853	Si
SLU 31	12.35	-2942	-1345.56	5986	2392.51	1.778	Si
SLU 31	14.25	-2755	296.99	5605	2251.6	7.581	Si
SLU 39	12.35	-2911	-1439.47	5922	2368.89	1.646	Si
SLU 39	14.25	-2812	292.65	5721	2294.71	7.841	Si
SLU 42	12.35	-3326	-1495.6	6766	2676.47	1.79	Si
SLU 42	14.25	-3326	388.79	6766	2676.51	6.884	Si
SLU 18	12.35	-2816	-1199.9	5728	2297.44	1.915	Si
SLU 18	14.25	-2473	257.77	5031	2036.2	7.899	Si
SLU 81	12.35	-3794	-1603.89	7719	3014.5	1.879	Si
SLU 81	14.25	-3392	364.2	6901	2724.74	7.482	Si
SLU 41	12.35	-3350	-1483.9	6815	2693.98	1.815	Si
SLU 41	14.25	-3333	389.89	6780	2681.51	6.878	Si
SLU 19	12.35	-2792	-1211.6	5680	2279.38	1.881	Si
SLU 19	14.25	-2466	256.67	5017	2030.94	7.913	Si
SLU 34	12.35	-3381	-1389.99	6879	2717	1.955	Si
SLU 34	14.25	-3275	394.22	6664	2639.71	6.696	Si
SLU 82	12.35	-3770	-1615.59	7670	2997.46	1.855	Si
SLU 82	14.25	-3385	363.1	6887	2719.76	7.49	Si

Verifica a pressoflessione nel piano secondo D.M. 17-01-18 NTC §7.8.2.2.1 in combinazioni sismiche, γM = 2

Comb.	Quota	N	M	σ0	Mu	c.s.	Verifica
SLV 9	12.35	-1088	-2295.25	0	0	0	No, e>l/2
SLV 9	14.25	-2625	803.19	5340	2203.18	2.743	Si
SLV 1	12.35	-3607	-880.16	7338	2975.7	3.381	Si
SLV 1	14.25	-3336	-406.72	6788	2765.7	6.8	Si
SLV 15	12.35	-2459	-1051.66	5004	2070.15	1.968	Si
SLV 15	14.25	-1559	975.11	3172	1332.99	1.367	Si
SLV 6	12.35	-1725	-2028.52	0	0	0	No, e>l/2
SLV 6	14.25	-3085	337.16	6276	2568.46	7.618	Si
SLV 5	12.35	-1725	-2028.52	0	0	0	No, e>l/2
SLV 5	14.25	-3085	337.16	6276	2568.46	7.618	Si
SLV 16	12.35	-2459	-1051.66	5004	2070.15	1.968	Si
SLV 16	14.25	-1559	975.11	3172	1332.99	1.367	Si
SLV 2	12.35	-3607	-880.16	7338	2975.7	3.381	Si
SLV 2	14.25	-3336	-406.72	6788	2765.7	6.8	Si
SLV 10	12.35	-1088	-2295.25	0	0	0	No, e>l/2
SLV 10	14.25	-2625	803.19	5340	2203.18	2.743	Si
SLV 13	12.35	-1483	-1769.24	0	0	0	No, e>l/2
SLV 13	14.25	-1803	1146.7	3669	1535.34	1.339	Si
SLV 14	12.35	-1483	-1769.24	0	0	0	No, e>l/2
SLV 14	14.25	-1803	1146.7	3669	1535.34	1.339	Si

Verifica a taglio nel piano secondo D.M. 17-01-18 (N.T.C.) §7.8.2.2.2 con rottura per scorrimento in combinazioni non sismiche, γM = 3

Comb.	Quota	N	V par	M	σ0	σN	l'	fvd	Vt scorr.	Vt fess.diag.	Vt,lim	c.s.	Verifica
SLU 42	12.35	-3326	-1797	-1495.6		9251	1.284	6789	2441			1.36	Si
SLU 42	14.25	-3326	-1839	388.79		6766	1.7554	6458	3174			1.73	Si
SLU 39	12.35	-2911	-1674	-1439.47		9044	1.1494	6761	2176			1.3	Si
SLU 39	14.25	-2812	-1705	292.65		5721	1.7554	6318	3106			1.82	Si
SLU 82	12.35	-3770	-1907	-1615.59		9992	1.3475	6888	2599			1.36	Si
SLU 82	14.25	-3385	-1944	363.1		6887	1.7554	6474	3182			1.64	Si
SLU 31	12.35	-2942	-1586	-1345.56		8332	1.2611	6667	2354			1.48	Si
SLU 31	14.25	-2755	-1616	296.99		5605	1.7554	6303	3098			1.92	Si
SLU 41	12.35	-3350	-1783	-1483.9		9173	1.3041	6779	2475			1.39	Si
SLU 41	14.25	-3333	-1826	389.89		6780	1.7554	6460	3175			1.74	Si
SLU 73	12.35	-3826	-1805	-1509.98		9429	1.449	6813	2764			1.53	Si
SLU 73	14.25	-3335	-1842	368.53		6784	1.7554	6460	3175			1.72	Si
SLU 81	12.35	-3794	-1893	-1603.89		9928	1.3649	6879	2629			1.39	Si
SLU 81	14.25	-3392	-1931	364.2		6901	1.7554	6476	3183			1.65	Si
SLU 40	12.35	-2887	-1688	-1451.17		9164	1.1249	6777	2135			1.26	Si
SLU 40	14.25	-2805	-1718	291.55		5707	1.7554	6316	3105			1.81	Si
SLU 83	12.35	-4233	-2002	-1648.31		10320	1.4649	6932	2843			1.42	Si
SLU 83	14.25	-3912	-2051	461.43		7960	1.7554	6617	3252			1.59	Si
SLU 84	12.35	-4209	-2016	-1660.02		10368	1.45	6938	2817			1.4	Si
SLU 84	14.25	-3905	-2064	460.33		7946	1.7554	6615	3251			1.57	Si

Verifica a taglio nel piano secondo D.M. 17-01-18 (N.T.C.) §7.8.2.2.2 con rottura per scorrimento in combinazioni sismiche, γM = 2

Comb.	Quota	N	V par	M	σ0	σN	l'	fvd	Vt scorr.	Vt fess.diag.	Vt,lim	c.s.	Verifica
SLV 1	12.35	-3607	-591	-880.16		7338	1.7554	9801	4817			8.15	Si
SLV 1	14.25	-3336	-1707	-406.72		6788	1.7554	9691	4763			2.79	Si
SLV 6	12.35	-1725	-2256	-2028.52		0	0	8333	0			0	No, Vu<V
SLV 6	14.25	-3085	-2265	337.16		6276	1.7554	9589	4713			2.08	Si
SLV 9	12.35	-1088	-2861	-2295.25		0	0	8333	0			0	No, Vu<V
SLV 9	14.25	-2625	-2149	803.19		5466	1.7151	9426	4527			2.11	Si
SLV 2	12.35	-3607	-591	-880.16		7338	1.7554	9801	4817			8.15	Si
SLV 2	14.25	-3336	-1707	-406.72		6788	1.7554	9691	4763			2.79	Si
SLV 15	12.35	-2459	-1784	-1051.66		6505	1.3502	9634	3642			2.04	Si
SLV 15	14.25	-1559	-724	975.11		7357	0.7569	9805	2078			2.87	Si
SLV 14	12.35	-1483	-2607	-1769.24		0	0	8333	0			0	No, Vu<V
SLV 14	14.25	-1803	-1319	1146.7		8877	0.7256	10109	2054			1.56	Si
SLV 16	12.35	-2459	-1784	-1051.66		6505	1.3502	9634	3642			2.04	Si
SLV 16	14.25	-1559	-724	975.11		7357	0.7569	9805	2078			2.87	Si
SLV 5	12.35	-1725	-2256	-2028.52		0	0	8333	0			0	No, Vu<V
SLV 5	14.25	-3085	-2265	337.16		6276	1.7554	9589	4713			2.08	Si
SLV 10	12.35	-1088	-2861	-2295.25		0	0	8333	0			0	No, Vu<V
SLV 10	14.25	-2625	-2149	803.19		5466	1.7151	9426	4527			2.11	Si
SLV 13	12.35	-1483	-2607	-1769.24		0	0	8333	0			0	No, Vu<V
SLV 13	14.25	-1803	-1319	1146.7		8877	0.7256	10109	2054			1.56	Si

Verifica a pressoflessione fuori piano D.M. 17-01-18 (N.T.C.)

quota 13.025 Wa 0.05 denominatore 8 γM = 2

Comb.	fd	Sa	σ0	N	M	Mc	Coeff.s.	Verifica
SLV 14	143750	0.52	3324	-1634	195.97	222.49	1.14	Si
SLV 13	143750	0.52	3324	-1634	195.97	222.49	1.14	Si
SLV 10	143750	0.52	3695	-1816	195.97	246.55	1.26	Si
SLV 9	143750	0.52	3695	-1816	195.97	246.55	1.26	Si
SLV 16	143750	0.52	4228	-2078	195.97	280.9	1.43	Si
SLV 15	143750	0.52	4228	-2078	195.97	280.9	1.43	Si
SLV 6	143750	0.52	4918	-2417	195.97	324.77	1.66	Si
SLV 5	143750	0.52	4918	-2417	195.97	324.77	1.66	Si
SLV 12	143750	0.52	6711	-3298	195.97	436.42	2.23	Si
SLV 11	143750	0.52	6711	-3298	195.97	436.42	2.23	Si

Verifica dei meccanismi locali di collasso con analisi cinematica lineare

forza di aggancio al piano = 0 quota mezzeria = 13.025 Wa = 0.05 Ta = 0.0592

Comb.	N top	N base	V orto	α0	M*	e*	a0*	aLim	Verifica
SLV 7	-1270	-5834	150	0.012	367.7	0.889	0.18855	10.02695	No
SLV 8	-1270	-5834	150	0.012	367.7	0.889	0.18855	10.02695	No
SLV 4	-1279	-4062	112	0.026	368.5	0.889	0.41787	11.09238	No
SLV 3	-1279	-4062	112	0.026	368.5	0.889	0.41787	11.09238	No
SLV 12	-1430	-6154	117	0.025	382.1	0.889	0.40719	10.02695	No
SLV 11	-1430	-6154	117	0.025	382.1	0.889	0.40719	10.02695	No
SLV 9	-1991	-2162	-97	0.034	434.4	0.892	0.55344	10.02695	No
SLV 10	-1991	-2162	-97	0.034	434.4	0.892	0.55344	10.02695	No
SLV 13	-1981	-3934	-60	0.045	433.5	0.892	0.73253	11.09238	No
SLV 14	-1981	-3934	-60	0.045	433.5	0.892	0.73253	11.09238	No

Tabella dei coefficienti di sicurezza minimi

Stato limite	Coeff.s.	Comb.	Verifica
PF_SLU	1.62	SLU 40	Si
V_SLU	1.265	SLU 40	Si
PF_SLV	0	SLV 5	No
V_SLV	0	SLV 5	No
PFFP_SLV	1.135	SLV 13	Si
R_SLV	0.019	SLV 7	No

Maschio 269

Verifiche condotte secondo D.M. 17-01-18 (N.T.C.)

Dati geometrici

X ini.	Y ini.	X fin.	Y fin.	Quota i.	Quota.s	l	Sp.	h netta	h ini.	h fin.	a	a.s.,sx	a.s.,dx
-0.134	-3.248	-0.134	1.387	L6	L7	4.634	0.28	3.15	3.15	3.15			

Caratteristiche del materiale

(Circolare 7 21-01-19 C8.5.I) Muratura in mattoni pieni e malta di calce LC2_Corti

fb	fk	fvk0	fmedio	τ0	fv0	μ	ϕ	fv,lim	E	G	FC
600000			345000	9000	20000	0.58	0.77	32500	320000000	128000000	1.2

Verifica a pressoflessione nel piano secondo D.M. 17-01-18 NTC §7.8.2.2.1 in combinazioni non sismiche, γM = 3

Comb.	Quota	N	M	σ0	Mu	c.s.	Verifica
SLU 82	11.45	-15807	961.85	12182	31149.94	32.385	Si
SLU 82	13.55	-6737	-1300.45	5192	14615.7	11.239	Si
SLU 40	11.45	-13036	876.56	10046	26479.94	30.209	Si
SLU 40	13.55	-5412	-1281.12	4171	11897.63	9.287	Si
SLU 41	11.45	-14162	609.53	10914	28417.71	46.622	Si
SLU 41	13.55	-6520	-1506.9	5025	14175.3	9.407	Si
SLU 60	11.45	-14828	712.83	11428	29538.9	41.439	Si
SLU 60	13.55	-6487	-1217.57	4999	14109.13	11.588	Si
SLU 83	11.45	-16933	694.82	13050	32950.86	47.424	Si
SLU 83	13.55	-7845	-1526.23	6046	16828.98	11.026	Si
SLU 32	11.45	-14039	676.42	10820	28209.96	41.705	Si
SLU 32	13.55	-6500	-1344.17	5009	14135.16	10.516	Si
SLU 39	11.45	-13313	738.14	10260	26962.94	36.528	Si
SLU 39	13.55	-5632	-1586.98	4340	12354.02	7.785	Si
SLU 42	11.45	-13884	747.95	10700	27945.03	37.362	Si
SLU 42	13.55	-6300	-1201.04	4855	13727.47	11.43	Si
SLU 81	11.45	-16085	823.43	12396	31599.19	38.375	Si
SLU 81	13.55	-6957	-1606.32	5362	15059.31	9.375	Si
SLU 18	11.45	-12057	627.54	9292	24749.92	39.44	Si
SLU 18	13.55	-5162	-1198.24	3978	11376.54	9.494	Si

Verifica a pressoflessione nel piano secondo D.M. 17-01-18 NTC §7.8.2.2.1 in combinazioni sismiche, γM = 2

Comb.	Quota	N	M	σ0	Mu	c.s.	Verifica
SLV 7	11.45	-10927	5630.09	8421	23574.16	4.187	Si
SLV 7	13.55	-3484	-1652.69	2685	7896.45	4.778	Si
SLV 5	11.45	-10097	-3869.33	7781	21905.65	5.661	Si
SLV 5	13.55	-6092	1285.1	4695	13574.45	10.563	Si
SLV 10	11.45	-11695	-4658.76	9013	25099.21	5.388	Si
SLV 10	13.55	-6777	137.3	5222	15030.92	109.472	Si
SLV 9	11.45	-11695	-4658.76	9013	25099.21	5.388	Si
SLV 9	13.55	-6777	137.3	5222	15030.92	109.472	Si
SLV 6	11.45	-10097	-3869.33	7781	21905.65	5.661	Si
SLV 6	13.55	-6092	1285.1	4695	13574.45	10.563	Si
SLV 8	11.45	-10927	5630.09	8421	23574.16	4.187	Si
SLV 8	13.55	-3484	-1652.69	2685	7896.45	4.778	Si

Comb.	Quota	N	M	σ0	Mu	c.s.	Verifica
SLV 16	11.45	-14099	594.86	10865	29762.93	50.033	Si
SLV 16	13.55	-5879	-3111.35	4531	13118.2	4.216	Si
SLV 15	11.45	-14099	594.86	10865	29762.93	50.033	Si
SLV 15	13.55	-5879	-3111.35	4531	13118.2	4.216	Si
SLV 11	11.45	-12525	4840.66	9652	26728.95	5.522	Si
SLV 11	13.55	-4169	-2800.49	3213	9405.07	3.358	Si
SLV 12	11.45	-12525	4840.66	9652	26728.95	5.522	Si
SLV 12	13.55	-4169	-2800.49	3213	9405.07	3.358	Si

Verifica a taglio nel piano secondo D.M. 17-01-18 (N.T.C.) §7.8.2.2.2 con rottura per scorrimento in combinazioni non sismiche, γM = 3

Comb.	Quota	N	V par	M	σ0	σN	I'	fvd	Vt scorr.	Vt fess.diag.	Vt,lim	c.s.	Verifica
SLU 69	11.45	-16693	1135	481.31		12865	4.6342	7271	9435			8.32	Si
SLU 69	13.55	-8569	1103	-800.76		6604	4.6342	6436	8351			7.57	Si
SLU 48	11.45	-15436	1113	370.7		11896	4.6342	7142	9267			8.32	Si
SLU 48	13.55	-8099	1084	-412.01		6241	4.6342	6388	8289			7.65	Si
SLU 71	11.45	-16401	1127	349.36		12640	4.6342	7241	9396			8.33	Si
SLU 71	13.55	-8526	1095	-756.63		6571	4.6342	6432	8346			7.62	Si
SLU 56	11.45	-16403	1126	522.49		12641	4.6342	7241	9396			8.35	Si
SLU 56	13.55	-8244	1096	-894.67		6353	4.6342	6403	8308			7.58	Si
SLU 77	11.45	-17660	1147	633.1		13610	4.6342	7370	9563			8.34	Si
SLU 77	13.55	-8714	1116	-1283.42		6715	4.6342	6451	8371			7.5	Si
SLU 58	11.45	-16111	1119	390.55		12416	4.6342	7211	9357			8.36	Si
SLU 58	13.55	-8201	1088	-850.55		6321	4.6342	6398	8302			7.63	Si
SLU 74	11.45	-16811	1073	761.71		12956	4.6342	7283	9450			8.81	Si
SLU 74	13.55	-7825	1048	-1363.5		6031	4.6342	6360	8252			7.87	Si
SLU 79	11.45	-17368	1140	501.15		13385	4.6342	7340	9524			8.35	Si
SLU 79	13.55	-8671	1108	-1239.29		6683	4.6342	6447	8365			7.55	Si
SLU 83	11.45	-16933	1071	694.82		13050	4.6342	7296	9467			8.84	Si
SLU 83	13.55	-7845	1045	-1526.23		6046	4.6342	6362	8255			7.9	Si
SLU 50	11.45	-15144	1106	238.76		11671	4.6342	7112	9228			8.34	Si
SLU 50	13.55	-8056	1076	-367.89		6209	4.6342	6383	8283			7.7	Si

Verifica a taglio nel piano secondo D.M. 17-01-18 (N.T.C.) §7.8.2.2.2 con rottura per scorrimento in combinazioni sismiche, γM = 2

Comb.	Quota	N	V par	M	σ0	σN	I'	fvd	Vt scorr.	Vt fess.diag.	Vt,lim	c.s.	Verifica
SLV 10	11.45	-11695	-4884	-4658.76		9013	4.6342	10136	13152			2.69	Si
SLV 10	13.55	-6777	-3684	137.3		5222	4.6342	9378	12168			3.3	Si
SLV 5	11.45	-10097	-4837	-3869.33		7781	4.6342	9890	12833			2.65	Si
SLV 5	13.55	-6092	-3759	1285.1		4695	4.6342	9272	12032			3.2	Si
SLV 6	11.45	-10097	-4837	-3869.33		7781	4.6342	9890	12833			2.65	Si
SLV 6	13.55	-6092	-3759	1285.1		4695	4.6342	9272	12032			3.2	Si
SLV 7	11.45	-10927	6388	5630.09		8421	4.6342	10018	12999			2.03	Si
SLV 7	13.55	-3484	5159	-1652.69		2685	4.6342	8870	11510			2.23	Si
SLV 8	11.45	-10927	6388	5630.09		8421	4.6342	10018	12999			2.03	Si
SLV 8	13.55	-3484	5159	-1652.69		2685	4.6342	8870	11510			2.23	Si
SLV 3	11.45	-8772	2513	3226.3		6760	4.6342	9685	12568			5	Si
SLV 3	13.55	-3599	1951	714.62		2774	4.6342	8888	11533			5.91	Si
SLV 9	11.45	-11695	-4884	-4658.76		9013	4.6342	10136	13152			2.69	Si
SLV 9	13.55	-6777	-3684	137.3		5222	4.6342	9378	12168			3.3	Si
SLV 4	11.45	-8772	2513	3226.3		6760	4.6342	9685	12568			5	Si
SLV 4	13.55	-3599	1951	714.62		2774	4.6342	8888	11533			5.91	Si
SLV 11	11.45	-12525	6341	4840.66		9652	4.6342	10264	13318			2.1	Si
SLV 11	13.55	-4169	5234	-2800.49		3213	4.6342	8976	11647			2.23	Si
SLV 12	11.45	-12525	6341	4840.66		9652	4.6342	10264	13318			2.1	Si
SLV 12	13.55	-4169	5234	-2800.49		3213	4.6342	8976	11647			2.23	Si

Verifica a pressoflessione fuori piano D.M. 17-01-18 (N.T.C.)

quota 13.025 Wa 0.05 denominatore 8 γM = 2

Comb.	fd	Sa	σ0	N	M	Mc	Coeff.s.	Verifica
SLV 4	143750	0.52	3666	-4757	517.35	646.02	1.25	Si
SLV 3	143750	0.52	3666	-4757	517.35	646.02	1.25	Si
SLV 2	143750	0.52	3844	-4988	517.35	676.33	1.31	Si
SLV 1	143750	0.52	3844	-4988	517.35	676.33	1.31	Si
SLV 7	143750	0.52	4238	-5499	517.35	743.22	1.44	Si
SLV 8	143750	0.52	4238	-5499	517.35	743.22	1.44	Si
SLV 5	143750	0.52	4831	-6268	517.35	842.88	1.63	Si
SLV 6	143750	0.52	4831	-6268	517.35	842.88	1.63	Si
SLV 12	143750	0.52	4906	-6366	517.35	855.51	1.65	Si
SLV 11	143750	0.52	4906	-6366	517.35	855.51	1.65	Si

Verifica dei meccanismi locali di collasso con analisi cinematica lineare

forza di aggancio al piano = 0 quota mezzeria = 13.025 Wa = 0.05 Ta = 0.0592

Comb.	N top	N base	V orto	α0	M*	e*	a0*	aLim	Verifica
SLV 14	-2518	-13849	454	0	898.3	0.892	0	11.09238	No
SLV 13	-2518	-13849	454	0	898.3	0.892	0	11.09238	No
SLV 16	-1382	-14099	381	0.002	810.4	0.91	0.02442	11.09238	No
SLV 15	-1382	-14099	381	0.002	810.4	0.91	0.02442	11.09238	No
SLV 4	-2033	-8772	-269	0.026	858.8	0.897	0.42187	11.09238	No
SLV 3	-2033	-8772	-269	0.026	858.8	0.897	0.42187	11.09238	No
SLV 9	-4071	-11695	313	0.025	1035.8	0.889	0.41122	10.02695	No
SLV 10	-4071	-11695	313	0.025	1035.8	0.889	0.41122	10.02695	No
SLV 1	-3169	-8523	-195	0.04	954.4	0.889	0.65108	11.09238	No
SLV 2	-3169	-8523	-195	0.04	954.4	0.889	0.65108	11.09238	No

Tabella dei coefficienti di sicurezza minimi

Stato limite	Coeff.s.	Comb.	Verifica
PF_SLU	7.785	SLU 39	Si
V_SLU	7.502	SLU 77	Si
PF_SLV	3.358	SLV 11	Si
V_SLV	2.035	SLV 7	Si

Stato limite	Coeff.s.	Comb.	Verifica
PFFP_SLV	1.249	SLV 3	Si
R_SLV	0	SLV 13	No

Maschio 270

Verifiche condotte secondo D.M. 17-01-18 (N.T.C.)

Dati geometrici

X ini.	Y ini.	X fin.	Y fin.	Quota i.	Quota.s	l	Sp.	h netta	h ini.	h fin.	a	a.s.,sx	a.s.,dx
-0.134	2.187	-0.134	5.83	L6	L7	3.644	0.28	3.15	3.15	3.15			

Caratteristiche del materiale

(Circolare 7 21-01-19 C8.5.I) Muratura in mattoni pieni e malta di calce LC2_Corti

fb	fk	fvk0	fmedio	τ0	fv0	μ	ϕ	fv,lim	E	G	FC
600000			345000	9000	20000	0.58	0.77	32500	320000000	128000000	1.2

Verifica a pressoflessione nel piano secondo D.M. 17-01-18 NTC §7.8.2.2.1 in combinazioni non sismiche, γM = 3

Comb.	Quota	N	M	σ0	Mu	c.s.	Verifica
SLU 36	11.45	-12574	1489.1	12324	19442.16	13.056	Si
SLU 36	13.55	-6829	-166.72	6694	11419.75	68.496	Si
SLU 37	11.45	-12375	1385.59	12130	19189.2	13.849	Si
SLU 37	13.55	-6722	-84.59	6588	11255.57	133.058	Si
SLU 31	11.45	-11006	1252.25	10787	17396.35	13.892	Si
SLU 31	13.55	-5568	-156.24	5458	9465.01	60.581	Si
SLU 41	11.45	-11949	1502.7	11712	18640.29	12.405	Si
SLU 41	13.55	-6280	-113.37	6155	10576.76	93.295	Si
SLU 35	11.45	-12536	1515.68	12287	19394.7	12.796	Si
SLU 35	13.55	-6793	-97.32	6658	11364.46	116.779	Si
SLU 39	11.45	-11234	1458.17	11011	17700.02	12.139	Si
SLU 39	13.55	-5673	-91.35	5560	9630.03	105.414	Si
SLU 40	11.45	-11271	1431.6	11047	17749.61	12.398	Si
SLU 40	13.55	-5709	-160.76	5596	9687.1	60.259	Si
SLU 42	11.45	-11987	1476.12	11749	18688.71	12.661	Si
SLU 42	13.55	-6316	-182.77	6191	10632.86	58.175	Si
SLU 32	11.45	-11821	1471.15	11586	18472.85	12.557	Si
SLU 32	13.55	-6186	-75.3	6063	10431.38	138.527	Si
SLU 33	11.45	-11858	1444.58	11622	18521.49	12.821	Si
SLU 33	13.55	-6222	-144.71	6099	10487.64	72.475	Si

Verifica a pressoflessione nel piano secondo D.M. 17-01-18 NTC §7.8.2.2.1 in combinazioni sismiche, γM = 2

Comb.	Quota	N	M	σ0	Mu	c.s.	Verifica
SLV 3	11.45	-7458	3427.64	7309	12774.07	3.727	Si
SLV 3	13.55	-3216	1119.3	3152	5708.1	5.1	Si
SLV 6	11.45	-10208	-1713.06	10005	17074.77	9.967	Si
SLV 6	13.55	-4318	3411.16	4232	7593.92	2.226	Si
SLV 11	11.45	-9383	3240.23	9197	15808.15	4.879	Si
SLV 11	13.55	-5315	-3165.92	5210	9270.88	2.928	Si
SLV 2	11.45	-8071	1624.41	7910	13751.92	8.466	Si
SLV 2	13.55	-3206	2764.92	3142	5690.37	2.058	Si
SLV 4	11.45	-7458	3427.64	7309	12774.07	3.727	Si
SLV 4	13.55	-3216	1119.3	3152	5708.1	5.1	Si
SLV 8	11.45	-8164	4297.7	8002	13900.19	3.234	Si
SLV 8	13.55	-4352	-2074.23	4265	7651.89	3.689	Si
SLV 5	11.45	-10208	-1713.06	10005	17074.77	9.967	Si
SLV 5	13.55	-4318	3411.16	4232	7593.92	2.226	Si
SLV 7	11.45	-8164	4297.7	8002	13900.19	3.234	Si
SLV 7	13.55	-4352	-2074.23	4265	7651.89	3.689	Si
SLV 12	11.45	-9383	3240.23	9197	15808.15	4.879	Si
SLV 12	13.55	-5315	-3165.92	5210	9270.88	2.928	Si
SLV 1	11.45	-8071	1624.41	7910	13751.92	8.466	Si
SLV 1	13.55	-3206	2764.92	3142	5690.37	2.058	Si

Verifica a taglio nel piano secondo D.M. 17-01-18 (N.T.C.) §7.8.2.2.2 con rottura per scorrimento in combinazioni non sismiche, γM = 3

Comb.	Quota	N	V par	M	σ0	σN	l'	fvd	Vt scorr.	Vt fess.diag.	Vt,lim	c.s.	Verifica
SLU 78	11.45	-15055	-1078	1527.72		14756	3.6438	7523	7675			7.12	Si
SLU 78	13.55	-7992	-1051	-72.66		7833	3.6438	6600	6734			6.41	Si
SLU 71	11.45	-14181	-1072	1047.06		13899	3.6438	7409	7559			7.05	Si
SLU 71	13.55	-7498	-1043	127.98		7349	3.6438	6535	6668			6.39	Si
SLU 79	11.45	-14857	-1088	1424.2		14562	3.6438	7497	7649			7.03	Si
SLU 79	13.55	-7884	-1059	9.47		7727	3.6438	6586	6719			6.34	Si
SLU 69	11.45	-14342	-1081	1177.14		14057	3.6438	7430	7580			7.01	Si
SLU 69	13.55	-7570	-1054	115.26		7419	3.6438	6545	6677			6.34	Si
SLU 48	11.45	-13410	-1058	808.16		13144	3.6438	7308	7456			7.05	Si
SLU 48	13.55	-6988	-1032	225.2		6849	3.6438	6469	6600			6.39	Si
SLU 77	11.45	-15018	-1097	1554.29		14720	3.6438	7518	7670			6.99	Si
SLU 77	13.55	-7955	-1070	-3.25		7797	3.6438	6595	6729			6.29	Si
SLU 56	11.45	-14086	-1074	1185.31		13807	3.6438	7396	7546			7.03	Si
SLU 56	13.55	-7373	-1048	106.69		7227	3.6438	6519	6651			6.34	Si
SLU 58	11.45	-13925	-1065	1055.22		13649	3.6438	7375	7525			7.07	Si
SLU 58	13.55	-7302	-1038	119.41		7157	3.6438	6510	6642			6.4	Si
SLU 50	11.45	-13249	-1049	678.08		12986	3.6438	7287	7435			7.09	Si
SLU 50	13.55	-6916	-1022	237.93		6779	3.6438	6459	6590			6.45	Si
SLU 70	11.45	-14379	-1062	1150.57		14093	3.6438	7435	7585			7.14	Si
SLU 70	13.55	-7606	-1035	45.85		7455	3.6438	6550	6682			6.46	Si

Verifica a taglio nel piano secondo D.M. 17-01-18 (N.T.C.) §7.8.2.2.2 con rottura per scorrimento in combinazioni sismiche, γM = 2

Comb.	Quota	N	V par	M	σ0	σN	l'	fvd	Vt scorr.	Vt fess.diag.	Vt,lim	c.s.	Verifica
SLV 10	11.45	-11427	-4607	-2770.52		11200	3.6438	10573	10787			2.34	Si
SLV 10	13.55	-5281	-4149	2319.47		5176	3.6438	9369	9558			2.3	Si
SLV 6	11.45	-10208	-4828	-1713.06		10005	3.6438	10334	10544			2.18	Si
SLV 6	13.55	-4318	-4120	3411.16		4981	3.0956	9330	8086			1.96	Si
SLV 7	11.45	-8164	3157	4297.7		8002	3.6438	9934	10135			3.21	Si
SLV 7	13.55	-4352	2723	-2074.23		4265	3.6438	9186	9373			3.44	Si
SLV 12	11.45	-9383	3378	3240.23		9197	3.6438	10173	10379			3.07	Si
SLV 12	13.55	-5315	2693	-3165.92		5210	3.6438	9375	9565			3.55	Si
SLV 2	11.45	-8071	-2291	1624.41		7910	3.6438	9915	10116			4.41	Si
SLV 2	13.55	-3206	-1691	2764.92		3978	2.8782	9129	7357			4.35	Si
SLV 9	11.45	-11427	-4607	-2770.52		11200	3.6438	10573	10787			2.34	Si
SLV 9	13.55	-5281	-4149	2319.47		5176	3.6438	9369	9558			2.3	Si
SLV 5	11.45	-10208	-4828	-1713.06		10005	3.6438	10334	10544			2.18	Si
SLV 5	13.55	-4318	-4120	3411.16		4981	3.0956	9330	8086			1.96	Si
SLV 11	11.45	-9383	3378	3240.23		9197	3.6438	10173	10379			3.07	Si
SLV 11	13.55	-5315	2693	-3165.92		5210	3.6438	9375	9565			3.55	Si
SLV 8	11.45	-8164	3157	4297.7		8002	3.6438	9934	10135			3.21	Si
SLV 8	13.55	-4352	2723	-2074.23		4265	3.6438	9186	9373			3.44	Si
SLV 1	11.45	-8071	-2291	1624.41		7910	3.6438	9915	10116			4.41	Si
SLV 1	13.55	-3206	-1691	2764.92		3978	2.8782	9129	7357			4.35	Si

Verifica a pressoflessione fuori piano D.M. 17-01-18 (N.T.C.)

quota 13.025 Wa 0.05 denominatore 8 γM = 2

Comb.	fd	Sa	σ0	N	M	Mc	Coeff.s.	Verifica
SLV 3	143750	0.52	3967	-4048	406.78	548.28	1.35	Si
SLV 4	143750	0.52	3967	-4048	406.78	548.28	1.35	Si
SLV 1	143750	0.52	4028	-4110	406.78	556.37	1.37	Si
SLV 2	143750	0.52	4028	-4110	406.78	556.37	1.37	Si
SLV 7	143750	0.52	5098	-5201	406.78	697.78	1.72	Si
SLV 8	143750	0.52	5098	-5201	406.78	697.78	1.72	Si
SLV 6	143750	0.52	5300	-5407	406.78	724.17	1.78	Si
SLV 5	143750	0.52	5300	-5407	406.78	724.17	1.78	Si
SLV 11	143750	0.52	6127	-6252	406.78	831.33	2.04	Si
SLV 12	143750	0.52	6127	-6252	406.78	831.33	2.04	Si

Verifica dei meccanismi locali di collasso con analisi cinematica lineare

forza di aggancio al piano = 0 quota mezzeria = 13.025 Wa = 0.05 Ta = 0.0592

Comb.	N top	N base	V orto	α0	M*	e*	a0*	aLim	Verifica
SLV 1	-1348	-8071	-353	0	656	0.902	0	11.09238	No
SLV 13	-2165	-12133	523	0	722	0.891	0	11.09238	No
SLV 3	-1187	-7458	-440	0	644.3	0.906	0	11.09238	No
SLV 14	-2165	-12133	523	0	722	0.891	0	11.09238	No
SLV 4	-1187	-7458	-440	0	644.3	0.906	0	11.09238	No
SLV 2	-1348	-8071	-353	0	656	0.902	0	11.09238	No
SLV 15	-2004	-11520	435	0	708.4	0.892	0	11.09238	No
SLV 16	-2004	-11520	435	0	708.4	0.892	0	11.09238	No
SLV 10	-2066	-11427	318	0.006	713.6	0.892	0.10192	10.02695	No
SLV 9	-2066	-11427	318	0.006	713.6	0.892	0.10192	10.02695	No

Tabella dei coefficienti di sicurezza minimi

Stato limite	Coeff.s.	Comb.	Verifica
PF_SLU	12.139	SLU 39	Si
V_SLU	6.29	SLU 77	Si
PF_SLV	2.058	SLV 1	Si
V_SLV	1.963	SLV 5	Si
PFFP_SLV	1.348	SLV 3	Si
R_SLV	0	SLV 1	No

Maschio 271

Verifiche condotte secondo D.M. 17-01-18 (N.T.C.)

Dati geometrici

X ini.	Y ini.	X fin.	Y fin.	Quota i.	Quota.s	l	Sp.	h netta	h ini.	h fin.	a	a.s.,sx	a.s.,dx
-16.992	-4.784	-16.992	-4.589	L6	F1	0.194	0.3	2.519	2.47	2.568			

Caratteristiche del materiale

(Circolare 7 21-01-19 C8.5.I) Muratura in mattoni pieni e malta di calce LC2_Corti

fb	fk	fvk0	fmedio	τ0	fv0	μ	ϕ	fv,lim	E	G	FC
600000			345000	9000	20000	0.58	0.77	32500	320000000	128000000	1.2

Verifica a pressoflessione nel piano secondo D.M. 17-01-18 NTC §7.8.2.2.1 in combinazioni non sismiche, γM = 3

Comb.	Quota	N	M	σ0	Mu	c.s.	Verifica
SLU 28	11.45	-379	-41.03	0	0	0	No, e>l/2
SLU 28	13.42	-434	8.93	7452	38.35	4.295	Si
SLU 21	11.45	-372	-40.42	0	0	0	No, e>l/2
SLU 21	13.42	-402	8.64	6893	35.74	4.134	Si
SLU 25	11.45	-344	-40.72	0	0	0	No, e>l/2
SLU 25	13.42	-406	8.76	6957	36.04	4.116	Si
SLU 23	11.45	-185	-57.76	0	0	0	No, e>l/2
SLU 23	13.42	-443	11.77	7599	39.03	3.317	Si
SLU 55	11.45	-363	-59.77	0	0	0	No, e>l/2
SLU 55	13.42	-534	12.29	9164	46.06	3.748	Si
SLU 40	11.45	-365	-42.61	0	0	0	No, e>l/2
SLU 40	13.42	-393	9.21	6734	34.99	3.799	Si

Comb.	Quota	N	M	σ0	Mu	c.s.	Verifica
SLU 26	11.45	-220	-58.07	0	0	0	No, e>l/2
SLU 26	13.42	-472	11.94	8094	41.29	3.459	Si
SLU 42	11.45	-399	-42.92	0	0	0	No, e>l/2
SLU 42	13.42	-421	9.38	7229	37.31	3.977	Si
SLU 52	11.45	-328	-59.46	0	0	0	No, e>l/2
SLU 52	13.42	-505	12.12	8669	43.87	3.621	Si
SLU 30	11.45	-389	-39.98	0	0	0	No, e>l/2
SLU 30	13.42	-439	8.6	7528	38.7	4.498	Si

Verifica a pressoflessione nel piano secondo D.M. 17-01-18 NTC §7.8.2.2.1 in combinazioni sismiche, γM = 2

Comb.	Quota	N	M	σ0	Mu	c.s.	Verifica
SLV 7	11.45	3976	-493.89	0	0	0	No, Trazione
SLV 7	13.42	-2812	118.16	48232	165.35	1.399	Si
SLV 3	11.45	-249	-40.88	0	0	0	No, e>l/2
SLV 3	13.42	-411	1.66	7057	37.66	22.673	Si
SLV 5	11.45	-5714	548.28	98022	109.8	0.2	No, M>Mu
SLV 5	13.42	2671	-136.34	0	0	0	No, Trazione
SLV 1	11.45	-3156	271.78	54133	170.77	0.628	No, M>Mu
SLV 1	13.42	1233	-74.69	0	0	0	No, Trazione
SLV 10	11.45	-5000	472.64	85772	144.79	0.306	No, M>Mu
SLV 10	13.42	2258	-112.84	0	0	0	No, Trazione
SLV 4	11.45	-249	-40.88	0	0	0	No, e>l/2
SLV 4	13.42	-411	1.66	7057	37.66	22.673	Si
SLV 8	11.45	3976	-493.89	0	0	0	No, Trazione
SLV 8	13.42	-2812	118.16	48232	165.35	1.399	Si
SLV 2	11.45	-3156	271.78	54133	170.77	0.628	No, M>Mu
SLV 2	13.42	1233	-74.69	0	0	0	No, Trazione
SLV 6	11.45	-5714	548.28	98022	109.8	0.2	No, M>Mu
SLV 6	13.42	2671	-136.34	0	0	0	No, Trazione
SLV 9	11.45	-5000	472.64	85772	144.79	0.306	No, M>Mu
SLV 9	13.42	2258	-112.84	0	0	0	No, Trazione

Verifica a taglio nel piano secondo D.M. 17-01-18 (N.T.C.) §7.8.2.2.2 con rottura per scorrimento in combinazioni non sismiche, γM = 3

Comb.	Quota	N	V par	M	σ0	σN	l'	fvd	Vt scorr.	Vt fess.diag.	Vt,lim	c.s.	Verifica
SLU 26	11.45	-220	-133	-58.07		0	0	5556	0			0	No, Vu<V
SLU 26	13.42	-472	50	11.94		8094	0.1943	6635	387			7.75	Si
SLU 52	11.45	-328	-135	-59.46		0	0	5556	0			0	No, Vu<V
SLU 52	13.42	-505	47	12.12		8669	0.1943	6711	391			8.24	Si
SLU 25	11.45	-344	-93	-40.72		0	0	5556	0			0	No, Vu<V
SLU 25	13.42	-406	30	8.76		6957	0.1943	6483	378			12.49	Si
SLU 55	11.45	-363	-137	-59.77		0	0	5556	0			0	No, Vu<V
SLU 55	13.42	-534	47	12.29		9164	0.1943	6777	395			8.48	Si
SLU 23	11.45	-185	-132	-57.76		0	0	5556	0			0	No, Vu<V
SLU 23	13.42	-443	51	11.77		7599	0.1943	6569	383			7.54	Si
SLU 28	11.45	-379	-94	-41.03		0	0	5556	0			0	No, Vu<V
SLU 28	13.42	-434	29	8.93		7452	0.1943	6549	382			12.99	Si
SLU 21	11.45	-372	-91	-40.42		0	0	5556	0			0	No, Vu<V
SLU 21	13.42	-402	30	8.64		6893	0.1943	6475	377			12.44	Si
SLU 30	11.45	-389	-92	-39.98		0	0	5556	0			0	No, Vu<V
SLU 30	13.42	-439	27	8.6		7528	0.1943	6559	382			14.14	Si
SLU 40	11.45	-365	-94	-42.61		0	0	5556	0			0	No, Vu<V
SLU 40	13.42	-393	35	9.21		6734	0.1943	6453	376			10.68	Si
SLU 42	11.45	-399	-95	-42.92		0	0	5556	0			0	No, Vu<V
SLU 42	13.42	-421	34	9.38		7229	0.1943	6519	380			11.07	Si

Verifica a taglio nel piano secondo D.M. 17-01-18 (N.T.C.) §7.8.2.2.2 con rottura per scorrimento in combinazioni sismiche, γM = 2

Comb.	Quota	N	V par	M	σ0	σN	l'	fvd	Vt scorr.	Vt fess.diag.	Vt,lim	c.s.	Verifica
SLV 10	11.45	-5000	1118	472.64		2108727	0.0079	16250	39			0.03	No, Vu<V
SLV 10	13.42	2258	-423	-112.84		0	0	8333	0			0	No, Vu<V
SLV 6	11.45	-5714	1268	548.28		5252645	0.0036	16250	18			0.01	No, Vu<V
SLV 6	13.42	2671	-591	-136.34		0	0	8333	0			0	No, Vu<V
SLV 8	11.45	3976	-1166	-493.89		0	0	8333	0			0	No, Vu<V
SLV 8	13.42	-2812	412	118.16		56662	0.1654	16250	806			1.96	Si
SLV 1	11.45	-3156	591	271.78		317693	0.0331	16250	161			0.27	No, Vu<V
SLV 1	13.42	1233	-436	-74.69		0	0	8333	0			0	No, Vu<V
SLV 3	11.45	-249	-139	-40.88		0	0	8333	0			0	No, Vu<V
SLV 3	13.42	-411	-136	1.66		7057	0.1943	9745	568			4.19	Si
SLV 5	11.45	-5714	1268	548.28		5252645	0.0036	16250	18			0.01	No, Vu<V
SLV 5	13.42	2671	-591	-136.34		0	0	8333	0			0	No, Vu<V
SLV 2	11.45	-3156	591	271.78		317693	0.0331	16250	161			0.27	No, Vu<V
SLV 2	13.42	1233	-436	-74.69		0	0	8333	0			0	No, Vu<V
SLV 7	11.45	3976	-1166	-493.89		0	0	8333	0			0	No, Vu<V
SLV 7	13.42	-2812	412	118.16		56662	0.1654	16250	806			1.96	Si
SLV 9	11.45	-5000	1118	472.64		2108727	0.0079	16250	39			0.03	No, Vu<V
SLV 9	13.42	2258	-423	-112.84		0	0	8333	0			0	No, Vu<V
SLV 4	11.45	-249	-139	-40.88		0	0	8333	0			0	No, Vu<V
SLV 4	13.42	-411	-136	1.66		7057	0.1943	9745	568			4.19	Si

Verifica a pressoflessione fuori piano D.M. 17-01-18 (N.T.C.)

quota 12.685 Wa 0.05 denominatore 8 γM = 2

Comb.	fd	Sa	σ0	N	M	Mc	Coeff.s.	Verifica
SLV 1	143750	0.52	0	1485	14.32	0	0	No, Trazione
SLV 9	143750	0.52	0	2331	14.32	0	0	No, Trazione
SLV 6	143750	0.52	0	2957	14.32	0	0	No, Trazione
SLV 2	143750	0.52	0	1485	14.32	0	0	No, Trazione
SLV 10	143750	0.52	0	2331	14.32	0	0	No, Trazione
SLV 5	143750	0.52	0	2957	14.32	0	0	No, Trazione
SLV 3	143750	0.52	6916	-403	14.32	57.05	3.98	Si
SLV 4	143750	0.52	6916	-403	14.32	57.05	3.98	Si
SLV 14	143750	0.52	10344	-603	14.32	82.79	5.78	Si

Comb.	fd	Sa	σ0	N	M	Mc	Coeff.s.	Verifica
SLV 13	143750	0.52	10344	-603	14.32	82.79	5.78	Si

Verifica dei meccanismi locali di collasso con analisi cinematica lineare

forza di aggancio al piano = 0 quota mezzeria = 12.685 Wa = 0.05 Ta = 0.0353

Comb.	N top	N base	V orto	α0	M*	e*	a0*	aLim	Verifica
SLV 10	1439	-5000	22	0	0	0	0	6.83016	No, Trazione
SLV 5	1684	-5714	23	0	0	0	0	6.83016	No, Trazione
SLV 2	796	-3156	8	0	0	0	0	7.23075	No, Trazione
SLV 9	1439	-5000	22	0	0	0	0	6.83016	No, Trazione
SLV 11	-1917	4690	-21	0	0	0	0	6.83016	No, Trazione
SLV 7	-1671	3976	-20	0	0	0	0	6.83016	No, Trazione
SLV 1	796	-3156	8	0	0	0	0	7.23075	No, Trazione
SLV 8	-1671	3976	-20	0	0	0	0	6.83016	No, Trazione
SLV 6	1684	-5714	23	0	0	0	0	6.83016	No, Trazione
SLV 12	-1917	4690	-21	0	0	0	0	6.83016	No, Trazione

Tabella dei coefficienti di sicurezza minimi

Stato limite	Coeff.s.	Comb.	Verifica
PF_SLU	0	SLU 2	No
V_SLU	0	SLU 2	No
PF_SLV	0	SLV 16	No
V_SLV	0	SLV 1	No
PFFP_SLV	0	SLV 10	No
R_SLV	0	SLV 16	No

Maschio 272

Verifiche condotte secondo D.M. 17-01-18 (N.T.C.)

Dati geometrici

X ini.	Y ini.	X fin.	Y fin.	Quota i.	Quota.s	l	Sp.	h netta	h ini.	h fin.	a	a.s.,sx	a.s.,dx
-16.992	-3.499	-16.992	-3.254	L6	F1	0.245	0.3	3.177	3.116	3.239			

Caratteristiche del materiale

(Circolare 7 21-01-19 C8.5.I) Muratura in mattoni pieni e malta di calce LC2_Corti

fb	fk	fvk0	fmedio	τ0	fv0	μ	ϕ	fv,lim	E	G	FC
600000			345000	9000	20000	0.58	0.77	32500	320000000	128000000	1.2

Verifica a pressoflessione nel piano secondo D.M. 17-01-18 NTC §7.8.2.2.1 in combinazioni non sismiche, γM = 3

Comb.	Quota	N	M	σ0	Mu	c.s.	Verifica
SLU 73	11.45	-980	-58.05	13332	100.41	1.73	Si
SLU 73	13.42	-428	27.19	5817	48.64	1.789	Si
SLU 52	11.45	-941	-53.25	12799	97.15	1.824	Si
SLU 52	13.42	-412	25.67	5609	47.03	1.832	Si
SLU 31	11.45	-820	-58.86	11154	86.69	1.473	Si
SLU 31	13.42	-302	25.73	4111	35.15	1.366	Si
SLU 26	11.45	-888	-53.27	12082	92.66	1.739	Si
SLU 26	13.42	-432	25.8	5873	49.07	1.902	Si
SLU 5	11.45	-849	-48.47	11549	89.25	1.842	Si
SLU 5	13.42	-416	24.27	5664	47.46	1.955	Si
SLU 10	11.45	-781	-54.05	10621	83.17	1.539	Si
SLU 10	13.42	-287	24.21	3903	33.46	1.382	Si
SLU 34	11.45	-902	-58.11	12273	93.86	1.615	Si
SLU 34	13.42	-406	26.91	5525	46.37	1.723	Si
SLU 13	11.45	-863	-53.3	11740	90.48	1.697	Si
SLU 13	13.42	-391	25.39	5316	44.75	1.762	Si
SLU 2	11.45	-767	-49.21	10430	81.89	1.664	Si
SLU 2	13.42	-312	23.09	4251	36.28	1.571	Si
SLU 23	11.45	-806	-54.02	10963	85.43	1.582	Si
SLU 23	13.42	-328	24.61	4459	37.96	1.542	Si

Verifica a pressoflessione nel piano secondo D.M. 17-01-18 NTC §7.8.2.2.1 in combinazioni sismiche, γM = 2

Comb.	Quota	N	M	σ0	Mu	c.s.	Verifica
SLV 5	11.45	2702	882.58	0	0	0	No, Trazione
SLV 5	13.42	-2977	-211.87	40500	243.81	1.151	Si
SLV 1	11.45	979	453.16	0	0	0	No, Trazione
SLV 1	13.42	-1787	-136.97	24318	175.4	1.281	Si
SLV 9	11.45	2317	755.8	0	0	0	No, Trazione
SLV 9	13.42	-2587	-160.08	35193	225.63	1.41	Si
SLV 10	11.45	2317	755.8	0	0	0	No, Trazione
SLV 10	13.42	-2587	-160.08	35193	225.63	1.41	Si
SLV 2	11.45	979	453.16	0	0	0	No, Trazione
SLV 2	13.42	-1787	-136.97	24318	175.4	1.281	Si
SLV 8	11.45	-3504	-766.94	0	0	0	No, e>l/2
SLV 8	13.42	1722	174.78	0	0	0	No, Trazione
SLV 7	11.45	-3504	-766.94	0	0	0	No, e>l/2
SLV 7	13.42	1722	174.78	0	0	0	No, Trazione
SLV 6	11.45	2702	882.58	0	0	0	No, Trazione
SLV 6	13.42	-2977	-211.87	40500	243.81	1.151	Si
SLV 11	11.45	-3890	-893.73	0	0	0	No, e>l/2
SLV 11	13.42	2112	226.58	0	0	0	No, Trazione
SLV 12	11.45	-3890	-893.73	0	0	0	No, e>l/2
SLV 12	13.42	2112	226.58	0	0	0	No, Trazione

Verifica a taglio nel piano secondo D.M. 17-01-18 (N.T.C.) §7.8.2.2.2 con rottura per scorrimento in combinazioni non sismiche, γM = 3

Comb.	Quota	N	V par	M	σ0	σN	I'	fvd	Vt scorr.	Vt fess.diag.	Vt,lim	c.s.	Verifica
SLU 13	11.45	-863	-65	-53.3		15786	0.1822	7660	419			6.46	Si
SLU 13	13.42	-391	151	25.39		7547	0.1726	6562	340			2.24	Si
SLU 34	11.45	-902	-73	-58.11		17254	0.1743	7856	411			5.6	Si
SLU 34	13.42	-406	161	26.91		8024	0.1687	6625	335			2.09	Si
SLU 2	11.45	-767	-58	-49.21		14608	0.1749	7503	394			6.78	Si
SLU 2	13.42	-312	136	23.09		7142	0.1458	6508	285			2.09	Si
SLU 10	11.45	-781	-69	-54.05		16283	0.1598	7727	370			5.38	Si
SLU 10	13.42	-287	142	24.21		8362	0.1144	6670	229			1.61	Si
SLU 52	11.45	-941	-63	-53.25		15860	0.1977	7670	455			7.19	Si
SLU 52	13.42	-412	157	25.67		7602	0.1808	6569	356			2.27	Si
SLU 31	11.45	-820	-77	-58.86		17960	0.1522	7950	363			4.69	Si
SLU 31	13.42	-302	151	25.73		8988	0.1121	6754	227			1.5	Si
SLU 73	11.45	-980	-72	-58.05		17210	0.1898	7850	447			6.22	Si
SLU 73	13.42	-428	166	27.19		8063	0.1768	6631	352			2.12	Si
SLU 23	11.45	-806	-67	-54.02		16141	0.1664	7708	385			5.77	Si
SLU 23	13.42	-328	145	24.61		7681	0.1422	6580	281			1.93	Si
SLU 26	11.45	-888	-63	-53.27		15782	0.1876	7660	431			6.88	Si
SLU 26	13.42	-432	155	25.8		7644	0.1882	6575	371			2.4	Si
SLU 76	11.45	-1062	-68	-57.3		17215	0.2057	7851	484			7.14	Si
SLU 76	13.42	-531	175	28.37		8543	0.2074	6695	416			2.38	Si

Verifica a taglio nel piano secondo D.M. 17-01-18 (N.T.C.) §7.8.2.2.2 con rottura per scorrimento in combinazioni sismiche, γM = 2

Comb.	Quota	N	V par	M	σ0	σN	I'	fvd	Vt scorr.	Vt fess.diag.	Vt,lim	c.s.	Verifica
SLV 10	11.45	2317	1067	755.8		0	0	8333	0			0	No, Vu<V
SLV 10	13.42	-2587	45	-160.08		47410	0.1819	16250	887			19.67	Si
SLV 8	11.45	-3504	-1061	-766.94		0	0	8333	0			0	No, Vu<V
SLV 8	13.42	1722	82	174.78		0	0	8333	0			0	No, Vu<V
SLV 2	11.45	979	1530	453.16		0	0	8333	0			0	No, Vu<V
SLV 2	13.42	-1787	333	-136.97		43291	0.1376	16250	671			2.02	Si
SLV 5	11.45	2702	1732	882.58		0	0	8333	0			0	No, Vu<V
SLV 5	13.42	-2977	196	-211.87		64433	0.154	16250	751			3.83	Si
SLV 12	11.45	-3890	-1726	-893.73		0	0	8333	0			0	No, Vu<V
SLV 12	13.42	2112	-69	226.58		0	0	8333	0			0	No, Vu<V
SLV 7	11.45	-3504	-1061	-766.94		0	0	8333	0			0	No, Vu<V
SLV 7	13.42	1722	82	174.78		0	0	8333	0			0	No, Vu<V
SLV 6	11.45	2702	1732	882.58		0	0	8333	0			0	No, Vu<V
SLV 6	13.42	-2977	196	-211.87		64433	0.154	16250	751			3.83	Si
SLV 9	11.45	2317	1067	755.8		0	0	8333	0			0	No, Vu<V
SLV 9	13.42	-2587	45	-160.08		47410	0.1819	16250	887			19.67	Si
SLV 1	11.45	979	1530	453.16		0	0	8333	0			0	No, Vu<V
SLV 1	13.42	-1787	333	-136.97		43291	0.1376	16250	671			2.02	Si
SLV 11	11.45	-3890	-1726	-893.73		0	0	8333	0			0	No, Vu<V
SLV 11	13.42	2112	-69	226.58		0	0	8333	0			0	No, Vu<V

Verifica a pressoflessione fuori piano D.M. 17-01-18 (N.T.C.)

quota 13.008 Wa 0.05 denominatore 8 γM = 2

Comb.	fd	Sa	σ0	N	M	Mc	Coeff.s.	Verifica
SLV 7	143750	0.52	0	4863	29.1	0	0	No, Trazione
SLV 8	143750	0.52	0	4863	29.1	0	0	No, Trazione
SLV 15	143750	0.52	0	2837	29.1	0	0	No, Trazione
SLV 16	143750	0.52	0	2837	29.1	0	0	No, Trazione
SLV 11	143750	0.52	0	5822	29.1	0	0	No, Trazione
SLV 12	143750	0.52	0	5822	29.1	0	0	No, Trazione
SLV 3	143750	0.52	4923	-362	29.1	52.1	1.79	Si
SLV 4	143750	0.52	4923	-362	29.1	52.1	1.79	Si
SLV 13	143750	0.52	9274	-682	29.1	94.49	3.25	Si
SLV 14	143750	0.52	9274	-682	29.1	94.49	3.25	Si

Verifica dei meccanismi locali di collasso con analisi cinematica lineare

forza di aggancio al piano = 0 quota mezzeria = 13.008 Wa = 0.05 Ta = 0.0562

Comb.	N top	N base	V orto	α0	M*	e*	a0*	aLim	Verifica
SLV 10	-201	2317	-7	0	0	0	0	9.55394	No, Trazione
SLV 4	111	-882	-23	0	0	0	0	10.51423	No, Trazione
SLV 1	307	979	-22	0	0	0	0	10.51423	No, Trazione
SLV 2	307	979	-22	0	0	0	0	10.51423	No, Trazione
SLV 6	140	2702	-14	0	0	0	0	9.55394	No, Trazione
SLV 3	111	-882	-23	0	0	0	0	10.51423	No, Trazione
SLV 9	-201	2317	-7	0	0	0	0	9.55394	No, Trazione
SLV 5	140	2702	-14	0	0	0	0	9.55394	No, Trazione
SLV 7	-516	-3504	-16	0.039	86.6	0.907	0.61841	9.55394	No
SLV 8	-516	-3504	-16	0.039	86.6	0.907	0.61841	9.55394	No

Tabella dei coefficienti di sicurezza minimi

Stato limite	Coeff.s.	Comb.	Verifica
PF_SLU	1.366	SLU 31	Si
V_SLU	1.502	SLU 31	Si
PF_SLV	0	SLV 16	No
V_SLV	0	SLV 1	No
PFFP_SLV	0	SLV 16	No
R_SLV	0	SLV 10	No

Maschio 273

Verifiche condotte secondo D.M. 17-01-18 (N.T.C.)

Dati geometrici

X ini.	Y ini.	X fin.	Y fin.	Quota i.	Quota.s	l	Sp.	h netta	h ini.	h fin.	a	a.s.,sx	a.s.,dx
-16.45	-4.784	-16.992	-4.784	L6	F1	0.542	0.3	2.47	2.47	2.47			

Caratteristiche del materiale

(Circolare 7 21-01-19 C8.5.I) Muratura in mattoni pieni e malta di calce LC2_Corti

fb	fk	fvk0	fmedio	τ0	fv0	μ	ϕ	fv,lim	E	G	FC
600000			345000	9000	20000	0.58	0.77	32500	320000000	128000000	1.2

Verifica a pressoflessione nel piano secondo D.M. 17-01-18 NTC §7.8.2.2.1 in combinazioni non sismiche, γM = 3

Comb.	Quota	N	M	σ0	Mu	c.s.	Verifica
SLU 36	11.45	-2046	79.63	12580	468.91	5.888	Si
SLU 36	13.42	-701	13.34	4308	179.86	13.487	Si
SLU 34	11.45	-2131	88.91	13105	484.76	5.452	Si
SLU 34	13.42	-575	16.69	3534	149.03	8.93	Si
SLU 33	11.45	-1931	81.06	11870	447.02	5.515	Si
SLU 33	13.42	-616	12.93	3785	159.09	12.309	Si
SLU 42	11.45	-1935	88.28	11898	447.89	5.074	Si
SLU 42	13.42	-633	14.45	3890	163.3	11.302	Si
SLU 31	11.45	-2016	90.33	12396	463.28	5.129	Si
SLU 31	13.42	-490	16.28	3011	127.83	7.853	Si
SLU 19	11.45	-1787	72.15	10986	418.98	5.807	Si
SLU 19	13.42	-531	14.35	3262	138.05	9.618	Si
SLU 40	11.45	-1820	89.7	11189	425.48	4.744	Si
SLU 40	13.42	-548	14.04	3367	142.3	10.136	Si
SLU 41	11.45	-1646	71.24	10122	390.75	5.485	Si
SLU 41	13.42	-722	12.48	4440	185.06	14.825	Si
SLU 82	11.45	-2261	89.49	13905	508.32	5.68	Si
SLU 82	13.42	-729	18.79	4485	186.83	9.943	Si
SLU 39	11.45	-1531	72.66	9412	366.98	5.05	Si
SLU 39	13.42	-637	12.07	3917	164.37	13.615	Si

Verifica a pressoflessione nel piano secondo D.M. 17-01-18 NTC §7.8.2.2.1 in combinazioni sismiche, γM = 2

Comb.	Quota	N	M	σ0	Mu	c.s.	Verifica
SLV 10	11.45	5978	-343	0	0	0	No, Trazione
SLV 10	13.42	-1346	-500.82	0	0	0	No, e>l/2
SLV 6	11.45	5849	-37.96	0	0	0	No, Trazione
SLV 6	13.42	-1358	-499.38	0	0	0	No, e>l/2
SLV 4	11.45	-3960	606.54	24348	859.45	1.417	Si
SLV 4	13.42	-432	171.64	0	0	0	No, e>l/2
SLV 3	11.45	-3960	606.54	24348	859.45	1.417	Si
SLV 3	13.42	-432	171.64	0	0	0	No, e>l/2
SLV 2	11.45	498	473.33	0	0	0	No, Trazione
SLV 2	13.42	-866	-137.29	5323	224.44	1.635	Si
SLV 5	11.45	5849	-37.96	0	0	0	No, Trazione
SLV 5	13.42	-1358	-499.38	0	0	0	No, e>l/2
SLV 1	11.45	498	473.33	0	0	0	No, Trazione
SLV 1	13.42	-866	-137.29	5323	224.44	1.635	Si
SLV 9	11.45	5978	-343	0	0	0	No, Trazione
SLV 9	13.42	-1346	-500.82	0	0	0	No, e>l/2
SLV 7	11.45	-9012	406.07	55411	1334.93	3.287	Si
SLV 7	13.42	87	530.37	0	0	0	No, Trazione
SLV 8	11.45	-9012	406.07	55411	1334.93	3.287	Si
SLV 8	13.42	87	530.37	0	0	0	No, Trazione

Verifica a taglio nel piano secondo D.M. 17-01-18 (N.T.C.) §7.8.2.2.2 con rottura per scorrimento in combinazioni non sismiche, γM = 3

Comb.	Quota	N	V par	M	σ0	σN	l'	fvd	Vt scorr.	Vt fess.diag.	Vt,lim	c.s.	Verifica
SLU 83	11.45	-2088	3	71.04		12838	0.5421	7267	1182			420.78	Si
SLU 83	13.42	-904	144	17.23		5558	0.5421	6297	1024			7.12	Si
SLU 75	11.45	-2372	-65	80.85		14586	0.5421	7500	1220			18.75	Si
SLU 75	13.42	-797	132	17.68		4903	0.5421	6209	1010			7.66	Si
SLU 74	11.45	-2083	-2	63.82		12810	0.5421	7264	1181			650.29	Si
SLU 74	13.42	-887	139	15.71		5452	0.5421	6283	1022			7.37	Si
SLU 84	11.45	-2377	-60	88.07		14614	0.5421	7504	1220			20.19	Si
SLU 84	13.42	-814	137	19.2		5008	0.5421	6223	1012			7.38	Si
SLU 79	11.45	-2207	-4	58.9		13570	0.5421	7365	1198			331.93	Si
SLU 79	13.42	-991	145	18.57		6091	0.5421	6368	1036			7.14	Si
SLU 77	11.45	-2199	-2	62.4		13519	0.5421	7358	1197			720.34	Si
SLU 77	13.42	-972	146	16.12		5975	0.5421	6352	1033			7.1	Si
SLU 82	11.45	-2261	-61	89.49		13905	0.5421	7410	1205			19.89	Si
SLU 82	13.42	-729	130	18.79		4485	0.5421	6154	1001			7.69	Si
SLU 78	11.45	-2488	-65	79.43		15296	0.5421	7595	1235			19.03	Si
SLU 78	13.42	-882	139	18.09		5426	0.5421	6279	1021			7.35	Si
SLU 81	11.45	-1972	3	72.46		12128	0.5421	7173	1167			439.61	Si
SLU 81	13.42	-819	137	16.82		5035	0.5421	6227	1013			7.4	Si
SLU 80	11.45	-2496	-67	75.93		15346	0.5421	7602	1236			18.49	Si
SLU 80	13.42	-901	138	20.54		5541	0.5421	6294	1024			7.4	Si

Verifica a taglio nel piano secondo D.M. 17-01-18 (N.T.C.) §7.8.2.2.2 con rottura per scorrimento in combinazioni sismiche, γM = 2

Comb.	Quota	N	V par	M	σ0	σN	l'	fvd	Vt scorr.	Vt fess.diag.	Vt,lim	c.s.	Verifica
SLV 7	11.45	-9012	-1571	406.07		55411	0.5421	16250	2643			1.68	Si
SLV 7	13.42	87	-317	530.37		0	0	8333	0			0	No, Vu<V
SLV 9	11.45	5978	1548	-343		0	0	8333	0			0	No, Vu<V
SLV 9	13.42	-1346	499	-500.82		0	0	8333	0			0	No, Vu<V
SLV 10	11.45	5978	1548	-343		0	0	8333	0			0	No, Vu<V
SLV 10	13.42	-1346	499	-500.82		0	0	8333	0			0	No, Vu<V
SLV 8	11.45	-9012	-1571	406.07		55411	0.5421	16250	2643			1.68	Si
SLV 8	13.42	87	-317	530.37		0	0	8333	0			0	No, Vu<V
SLV 5	11.45	5849	1857	-37.96		0	0	8333	0			0	No, Vu<V
SLV 5	13.42	-1358	347	-499.38		0	0	8333	0			0	No, Vu<V

Comb.	Quota	N	V par	M	σ0	σN	l'	fvd	Vt scorr.	Vt fess.diag.	Vt,lim	c.s.	Verifica
SLV 2	11.45	498	1018	473.33		0	0	8333	0			0	No, Vu<V
SLV 2	13.42	-866	-63	-137.29		8552	0.3374	10044	1017			16.24	Si
SLV 6	11.45	5849	1857	-37.96		0	0	8333	0			0	No, Vu<V
SLV 6	13.42	-1358	347	-499.38		0	0	8333	0			0	No, Vu<V
SLV 1	11.45	498	1018	473.33		0	0	8333	0			0	No, Vu<V
SLV 1	13.42	-866	-63	-137.29		8552	0.3374	10044	1017			16.24	Si
SLV 3	11.45	-3960	-10	606.54		37324	0.3536	15798	1676			165.43	Si
SLV 3	13.42	-432	-262	171.64		0	0	8333	0			0	No, Vu<V
SLV 4	11.45	-3960	-10	606.54		37324	0.3536	15798	1676			165.43	Si
SLV 4	13.42	-432	-262	171.64		0	0	8333	0			0	No, Vu<V

Verifica a pressoflessione fuori piano D.M. 17-01-18 (N.T.C.)

quota 12.685 Wa 0.05 denominatore 8 γM = 2

Comb.	fd	Sa	σ0	N	M	Mc	Coeff.s.	Verifica
SLV 11	143750	0.52	5202	-846	38.4	121.5	3.16	Si
SLV 12	143750	0.52	5202	-846	38.4	121.5	3.16	Si
SLV 7	143750	0.52	5335	-868	38.4	124.46	3.24	Si
SLV 8	143750	0.52	5335	-868	38.4	124.46	3.24	Si
SLV 16	143750	0.52	5629	-915	38.4	130.99	3.41	Si
SLV 15	143750	0.52	5629	-915	38.4	130.99	3.41	Si
SLV 3	143750	0.52	6071	-987	38.4	140.75	3.67	Si
SLV 4	143750	0.52	6071	-987	38.4	140.75	3.67	Si
SLV 13	143750	0.52	6128	-997	38.4	141.99	3.7	Si
SLV 14	143750	0.52	6128	-997	38.4	141.99	3.7	Si

Verifica dei meccanismi locali di collasso con analisi cinematica lineare

forza di aggancio al piano = 0 quota mezzeria = 12.685 Wa = 0.05 Ta = 0.034

Comb.	N top	N base	V orto	α0	M*	e*	a0*	aLim	Verifica
SLV 5	-341	5849	-4	0	0	0	0	6.69195	No, Trazione
SLV 1	-339	498	18	0	0	0	0	7.06679	No, Trazione
SLV 13	-457	926	-24	0	0	0	0	7.06679	No, Trazione
SLV 10	-376	5978	-16	0	0	0	0	6.69195	No, Trazione
SLV 14	-457	926	-24	0	0	0	0	7.06679	No, Trazione
SLV 6	-341	5849	-4	0	0	0	0	6.69195	No, Trazione
SLV 2	-339	498	18	0	0	0	0	7.06679	No, Trazione
SLV 9	-376	5978	-16	0	0	0	0	6.69195	No, Trazione
SLV 4	-373	-3960	25	0.057	99.3	0.889	0.93251	7.06679	No
SLV 3	-373	-3960	25	0.057	99.3	0.889	0.93251	7.06679	No

Tabella dei coefficienti di sicurezza minimi

Stato limite	Coeff.s.	Comb.	Verifica
PF_SLU	4.744	SLU 40	Si
V_SLU	7.098	SLU 77	Si
PF_SLV	0	SLV 14	No
V_SLV	0	SLV 1	No
PFFP_SLV	3.164	SLV 11	Si
R_SLV	0	SLV 14	No

Maschio 274

Verifiche condotte secondo D.M. 17-01-18 (N.T.C.)

Dati geometrici

X ini.	Y ini.	X fin.	Y fin.	Quota i.	Quota.s	l	Sp.	h netta	h ini.	h fin.	a	a.s.,sx	a.s.,dx
-13.753	-4.784	-14.61	-4.784	L6	F1	0.858	0.3	2.468	2.468	2.468			

Caratteristiche del materiale

(Circolare 7 21-01-19 C8.5.I) Muratura in mattoni pieni e malta di calce LC2_Corti

fb	fk	fvk0	fmedio	τ0	fv0	μ	ϕ	fv,lim	E	G	FC
600000			345000	9000	20000	0.58	0.77	32500	320000000	128000000	1.2

Verifica a pressoflessione nel piano secondo D.M. 17-01-18 NTC §7.8.2.2.1 in combinazioni non sismiche, γM = 3

Comb.	Quota	N	M	σ0	Mu	c.s.	Verifica
SLU 81	11.45	-2168	-295.01	8426	833.32	2.825	Si
SLU 81	13.42	-1329	116.98	5166	533.76	4.563	Si
SLU 39	11.45	-1660	-264.24	6451	655.25	2.48	Si
SLU 39	13.42	-1062	92.79	4127	432.23	4.658	Si
SLU 41	11.45	-1811	-266.66	7039	709.42	2.66	Si
SLU 41	13.42	-1207	102.38	4693	487.91	4.766	Si
SLU 33	11.45	-1852	-258.94	7199	723.96	2.796	Si
SLU 33	13.42	-1221	109.94	4745	492.9	4.483	Si
SLU 40	11.45	-1673	-278.48	6503	660.06	2.37	Si
SLU 40	13.42	-1092	104.49	4243	443.72	4.247	Si
SLU 82	11.45	-2181	-309.25	8478	837.85	2.709	Si
SLU 82	13.42	-1359	128.68	5282	544.93	4.235	Si
SLU 34	11.45	-1859	-269.27	7224	726.25	2.697	Si
SLU 34	13.42	-1252	121.36	4865	504.59	4.158	Si
SLU 19	11.45	-1649	-235.88	6411	651.56	2.762	Si
SLU 19	13.42	-1021	99.64	3968	416.42	4.179	Si
SLU 31	11.45	-1707	-266.86	6636	672.37	2.52	Si
SLU 31	13.42	-1106	111.77	4299	449.17	4.019	Si
SLU 42	11.45	-1824	-280.9	7091	714.15	2.542	Si
SLU 42	13.42	-1237	114.08	4810	499.23	4.376	Si

Verifica a pressoflessione nel piano secondo D.M. 17-01-18 NTC §7.8.2.2.1 in combinazioni sismiche, γM = 2

Comb.	Quota	N	M	σ0	Mu	c.s.	Verifica
SLV 3	11.45	1413	-495.82	0	0	0	No, Trazione
SLV 3	13.42	666	11.46	0	0	0	No, Trazione
SLV 6	11.45	-179	53.52	696	76.3	1.426	Si
SLV 6	13.42	619	-324	0	0	0	No, Trazione
SLV 8	11.45	-1270	-545.58	0	0	0	No, e>l/2
SLV 8	13.42	-1429	389.74	5554	584.84	1.501	Si
SLV 10	11.45	-2151	190.59	8361	859.21	4.508	Si
SLV 10	13.42	-563	-213.88	2189	237.09	1.109	Si
SLV 1	11.45	1740	-316.09	0	0	0	No, Trazione
SLV 1	13.42	1281	-202.66	0	0	0	No, Trazione
SLV 9	11.45	-2151	190.59	8361	859.21	4.508	Si
SLV 9	13.42	-563	-213.88	2189	237.09	1.109	Si
SLV 4	11.45	1413	-495.82	0	0	0	No, Trazione
SLV 4	13.42	666	11.46	0	0	0	No, Trazione
SLV 7	11.45	-1270	-545.58	0	0	0	No, e>l/2
SLV 7	13.42	-1429	389.74	5554	584.84	1.501	Si
SLV 5	11.45	-179	53.52	696	76.3	1.426	Si
SLV 5	13.42	619	-324	0	0	0	No, Trazione
SLV 2	11.45	1740	-316.09	0	0	0	No, Trazione
SLV 2	13.42	1281	-202.66	0	0	0	No, Trazione

Verifica a taglio nel piano secondo D.M. 17-01-18 (N.T.C.) §7.8.2.2.2 con rottura per scorrimento in combinazioni non sismiche, γM = 3

Comb.	Quota	N	V par	M	σ0	σN	l'	fvd	Vt scorr.	Vt fess.diag.	Vt,lim	c.s.	Verifica
SLU 80	11.45	-2509	-723	-292.96		9753	0.8576	6856	1764			2.44	Si
SLU 80	13.42	-1645	-260	147.34		6392	0.8576	6408	1649			6.33	Si
SLU 83	11.45	-2319	-715	-297.42		9014	0.8576	6757	1738			2.43	Si
SLU 83	13.42	-1475	-222	126.57		5732	0.8576	6320	1626			7.32	Si
SLU 84	11.45	-2332	-751	-311.66		9066	0.8576	6764	1740			2.32	Si
SLU 84	13.42	-1505	-235	138.27		5849	0.8576	6335	1630			6.93	Si
SLU 78	11.45	-2512	-719	-292.12		9763	0.8576	6857	1764			2.45	Si
SLU 78	13.42	-1634	-250	143.73		6350	0.8576	6402	1647			6.59	Si
SLU 82	11.45	-2181	-738	-309.25		8478	0.8576	6686	1720			2.33	Si
SLU 82	13.42	-1359	-210	128.68		5282	0.8576	6260	1610			7.67	Si
SLU 81	11.45	-2168	-702	-295.01		8426	0.8576	6679	1718			2.45	Si
SLU 81	13.42	-1329	-197	116.98		5166	0.8576	6244	1606			8.15	Si
SLU 40	11.45	-1673	-648	-278.48		7086	0.7869	6500	1535			2.37	Si
SLU 40	13.42	-1092	-166	104.49		4243	0.8576	6121	1575			9.48	Si
SLU 76	11.45	-2367	-734	-300.04		9199	0.8576	6782	1745			2.38	Si
SLU 76	13.42	-1519	-244	145.55		5904	0.8576	6343	1632			6.68	Si
SLU 42	11.45	-1824	-661	-280.9		7376	0.8244	6539	1617			2.45	Si
SLU 42	13.42	-1237	-191	114.08		4810	0.8576	6197	1594			8.34	Si
SLU 73	11.45	-2215	-721	-297.62		8611	0.8576	6704	1725			2.39	Si
SLU 73	13.42	-1373	-219	135.96		5338	0.8576	6267	1612			7.35	Si

Verifica a taglio nel piano secondo D.M. 17-01-18 (N.T.C.) §7.8.2.2.2 con rottura per scorrimento in combinazioni sismiche, γM = 2

Comb.	Quota	N	V par	M	σ0	σN	l'	fvd	Vt scorr.	Vt fess.diag.	Vt,lim	c.s.	Verifica
SLV 2	11.45	1740	371	-316.09		0	0	8333	0			0	No, Vu<V
SLV 2	13.42	1281	-822	-202.66		0	0	8333	0			0	No, Vu<V
SLV 10	11.45	-2151	-10	190.59		8361	0.8576	10006	2574			263.35	Si
SLV 10	13.42	-563	547	-213.88		12791	0.1467	10891	479			0.88	No, Vu<V
SLV 7	11.45	-1270	-881	-545.58		0	0	8333	0			0	No, Vu<V
SLV 7	13.42	-1429	-850	389.74		10176	0.4681	10368	1456			1.71	Si
SLV 3	11.45	1413	-3	-495.82		0	0	8333	0			0	No, Vu<V
SLV 3	13.42	666	-1096	11.46		0	0	8333	0			0	No, Vu<V
SLV 1	11.45	1740	371	-316.09		0	0	8333	0			0	No, Vu<V
SLV 1	13.42	1281	-822	-202.66		0	0	8333	0			0	No, Vu<V
SLV 8	11.45	-1270	-881	-545.58		0	0	8333	0			0	No, Vu<V
SLV 8	13.42	-1429	-850	389.74		10176	0.4681	10368	1456			1.71	Si
SLV 5	11.45	-179	368	53.52		1532	0.3893	8640	1009			2.74	Si
SLV 5	13.42	619	62	-324		0	0	8333	0			0	No, Vu<V
SLV 9	11.45	-2151	-10	190.59		8361	0.8576	10006	2574			263.35	Si
SLV 9	13.42	-563	547	-213.88		12791	0.1467	10891	479			0.88	No, Vu<V
SLV 4	11.45	1413	-3	-495.82		0	0	8333	0			0	No, Vu<V
SLV 4	13.42	666	-1096	11.46		0	0	8333	0			0	No, Vu<V
SLV 6	11.45	-179	368	53.52		1532	0.3893	8640	1009			2.74	Si
SLV 6	13.42	619	62	-324		0	0	8333	0			0	No, Vu<V

Verifica a pressoflessione fuori piano D.M. 17-01-18 (N.T.C.)

quota 12.684 Wa 0.05 denominatore 8 γM = 2

Comb.	fd	Sa	σ0	N	M	Mc	Coeff.s.	Verifica
SLV 3	143750	0.52	0	114	60.64	0	0	No, Trazione
SLV 6	143750	0.52	0	701	60.64	0	0	No, Trazione
SLV 5	143750	0.52	0	701	60.64	0	0	No, Trazione
SLV 4	143750	0.52	0	114	60.64	0	0	No, Trazione
SLV 2	143750	0.52	0	1149	60.64	0	0	No, Trazione
SLV 1	143750	0.52	0	1149	60.64	0	0	No, Trazione
SLV 9	143750	0.52	2793	-719	60.64	105.31	1.74	Si
SLV 10	143750	0.52	2793	-719	60.64	105.31	1.74	Si
SLV 8	143750	0.52	10687	-2749	60.64	376.35	6.21	Si
SLV 7	143750	0.52	10687	-2749	60.64	376.35	6.21	Si

Verifica dei meccanismi locali di collasso con analisi cinematica lineare

forza di aggancio al piano = 0 quota mezzeria = 12.684 Wa = 0.05 Ta = 0.0339

Comb.	N top	N base	V orto	α0	M*	e*	a0*	aLim	Verifica
SLV 1	1673	1740	48	0	0	0	0	7.05982	No, Trazione
SLV 4	1144	1413	21	0	0	0	0	7.05982	No, Trazione
SLV 5	990	-179	56	0	0	0	0	6.68604	No, Trazione
SLV 3	1144	1413	21	0	0	0	0	7.05982	No, Trazione

Comb.	N top	N base	V orto	α0	M*	e*	a0*	aLim	Verifica
SLV 2	1673	1740	48	0	0	0	0	7.05982	No, Trazione
SLV 6	990	-179	56	0	0	0	0	6.68604	No, Trazione
SLV 12	-1885	-3242	-55	0.053	283.4	0.918	0.83207	6.68604	No
SLV 11	-1885	-3242	-55	0.053	283.4	0.918	0.83207	6.68604	No
SLV 15	-2568	-5161	-47	0.057	352.1	0.931	0.88925	7.05982	No
SLV 16	-2568	-5161	-47	0.057	352.1	0.931	0.88925	7.05982	No

Tabella dei coefficienti di sicurezza minimi

Stato limite	Coeff.s.	Comb.	Verifica
PF_SLU	2.37	SLU 40	Si
V_SLU	2.319	SLU 84	Si
PF_SLV	0	SLV 6	No
V_SLV	0	SLV 1	No
PFFP_SLV	0	SLV 6	No
R_SLV	0	SLV 6	No

Maschio 275

Verifiche condotte secondo D.M. 17-01-18 (N.T.C.)

Dati geometrici

X ini.	Y ini.	X fin.	Y fin.	Quota i.	Quota.s	l	Sp.	h netta	h ini.	h fin.	a	a.s.,sx	a.s.,dx
-13.753	-4.784	-13.753	-3.509	L6	F1	1.275	0.28	2.788	2.468	3.108			

Caratteristiche del materiale

(Circolare 7 21-01-19 C8.5.I) Muratura in mattoni pieni e malta di calce LC2_Corti

fb	fk	fvk0	fmedio	τ0	fv0	μ	ϕ	fv,lim	E	G	FC
600000			345000	9000	20000	0.58	0.77	32500	320000000	128000000	1.2

Verifica a pressoflessione nel piano secondo D.M. 17-01-18 NTC §7.8.2.2.1 in combinazioni non sismiche, γM = 3

Comb.	Quota	N	M	σ0	Mu	c.s.	Verifica
SLU 32	11.45	-3536	19.66	9906	1980.17	100.722	Si
SLU 32	13.92	-1430	346.11	4005	866.71	2.504	Si
SLU 77	11.45	-4537	35.52	12709	2441.07	68.721	Si
SLU 77	13.92	-1949	463.8	5460	1159.3	2.5	Si
SLU 36	11.45	-3774	30.46	10570	2093.41	68.726	Si
SLU 36	13.92	-1681	409.42	4709	1009.69	2.466	Si
SLU 35	11.45	-3758	29.51	10526	2085.94	70.674	Si
SLU 35	13.92	-1684	410.79	4718	1011.44	2.462	Si
SLU 78	11.45	-4553	36.47	12754	2448.01	67.129	Si
SLU 78	13.92	-1946	462.43	5451	1157.59	2.503	Si
SLU 28	11.45	-3637	42.68	10189	2028.74	47.53	Si
SLU 28	13.92	-1671	401.02	4681	1004.06	2.504	Si
SLU 27	11.45	-3622	41.74	10145	2021.17	48.425	Si
SLU 27	13.92	-1674	402.4	4690	1005.8	2.5	Si
SLU 15	11.45	-3521	31	9864	1972.98	63.647	Si
SLU 15	13.92	-1572	374.74	4404	948.11	2.53	Si
SLU 33	11.45	-3552	20.61	9950	1987.8	96.471	Si
SLU 33	13.92	-1427	344.74	3997	864.94	2.509	Si
SLU 14	11.45	-3506	30.05	9820	1965.33	65.395	Si
SLU 14	13.92	-1575	376.11	4413	949.87	2.525	Si

Verifica a pressoflessione nel piano secondo D.M. 17-01-18 NTC §7.8.2.2.1 in combinazioni sismiche, γM = 2

Comb.	Quota	N	M	σ0	Mu	c.s.	Verifica
SLV 15	11.45	-4140	-369.5	11596	2388.54	6.464	Si
SLV 15	13.92	-894	353.23	2504	558.26	1.58	Si
SLV 13	11.45	-4193	-542.44	11746	2416.1	4.454	Si
SLV 13	13.92	-1168	564.81	3271	724.43	1.283	Si
SLV 4	11.45	-1801	573.96	5046	1100.86	1.918	Si
SLV 4	13.92	-916	-107.55	2566	571.63	5.315	Si
SLV 9	11.45	-3437	-413.99	9628	2018.42	4.876	Si
SLV 9	13.92	-1495	650.38	4186	920.08	1.415	Si
SLV 10	11.45	-3437	-413.99	9628	2018.42	4.876	Si
SLV 10	13.92	-1495	650.38	4186	920.08	1.415	Si
SLV 3	11.45	-1801	573.96	5046	1100.86	1.918	Si
SLV 3	13.92	-916	-107.55	2566	571.63	5.315	Si
SLV 14	11.45	-4193	-542.44	11746	2416.1	4.454	Si
SLV 14	13.92	-1168	564.81	3271	724.43	1.283	Si
SLV 6	11.45	-2736	-130.95	7663	1634.48	12.482	Si
SLV 6	13.92	-1501	512.15	4205	923.98	1.804	Si
SLV 5	11.45	-2736	-130.95	7663	1634.48	12.482	Si
SLV 5	13.92	-1501	512.15	4205	923.98	1.804	Si
SLV 16	11.45	-4140	-369.5	11596	2388.54	6.464	Si
SLV 16	13.92	-894	353.23	2504	558.26	1.58	Si

Verifica a taglio nel piano secondo D.M. 17-01-18 (N.T.C.) §7.8.2.2.2 con rottura per scorrimento in combinazioni non sismiche, γM = 3

Comb.	Quota	N	V par	M	σ0	σN	l'	fvd	Vt scorr.	Vt fess.diag.	Vt,lim	c.s.	Verifica
SLU 74	11.45	-4316	-144	25.67		12089	1.275	7167	2559			17.77	Si
SLU 74	13.92	-1695	-983	399.12		5019	1.206	6225	2102			2.14	Si
SLU 70	11.45	-4417	-4	48.69		12372	1.275	7205	2572			654.63	Si
SLU 70	13.92	-1936	-994	454.03		5720	1.2089	6318	2139			2.15	Si
SLU 80	11.45	-4513	-65	33.31		12641	1.275	7241	2585			39.48	Si
SLU 80	13.92	-1897	-1023	440.38		5572	1.216	6298	2145			2.1	Si
SLU 35	11.45	-3758	-121	29.51		10526	1.275	6959	2484			20.54	Si
SLU 35	13.92	-1684	-1007	410.79		5094	1.1807	6235	2061			2.05	Si
SLU 79	11.45	-4497	-94	32.36		12597	1.275	7235	2583			27.56	Si
SLU 79	13.92	-1900	-1049	441.76		5585	1.215	6300	2143			2.04	Si

Comb.	Quota	N	V par	M	σ0	σN	l'	fvd	Vt scorr.	Vt fess.diag.	Vt,lim	c.s.	Verifica
SLU 78	11.45	-4553	-84	36.47		12754	1.275	7256	2590			30.86	Si
SLU 78	13.92	-1946	-1081	462.43		5794	1.1996	6328	2126			1.97	Si
SLU 77	11.45	-4537	-112	35.52		12709	1.275	7250	2588			23.07	Si
SLU 77	13.92	-1949	-1107	463.8		5808	1.1986	6330	2124			1.92	Si
SLU 56	11.45	-4285	-58	36.06		12003	1.275	7156	2555			43.86	Si
SLU 56	13.92	-1840	-974	429.12		5419	1.213	6278	2132			2.19	Si
SLU 69	11.45	-4401	-32	47.75		12328	1.275	7199	2570			79.9	Si
SLU 69	13.92	-1939	-1020	455.4		5734	1.2079	6320	2138			2.1	Si
SLU 36	11.45	-3774	-93	30.46		10570	1.275	6965	2486			26.81	Si
SLU 36	13.92	-1681	-982	409.42		5080	1.1818	6233	2063			2.1	Si

Verifica a taglio nel piano secondo D.M. 17-01-18 (N.T.C.) §7.8.2.2.2 con rottura per scorrimento in combinazioni sismiche, γM = 2

Comb.	Quota	N	V par	M	σ0	σN	l'	fvd	Vt scorr.	Vt fess.diag.	Vt,lim	c.s.	Verifica
SLV 7	11.45	-2557	2260	445.51		7164	1.275	9766	3486			1.54	Si
SLV 7	13.92	-589	2198	-193.12		2265	0.929	8786	2285			1.04	Si
SLV 9	11.45	-3437	-2401	-413.99		9628	1.275	10259	3662			1.53	Si
SLV 9	13.92	-1495	-3288	650.38		8795	0.6069	10092	1715			0.52	No, Vu<V
SLV 8	11.45	-2557	2260	445.51		7164	1.275	9766	3486			1.54	Si
SLV 8	13.92	-589	2198	-193.12		2265	0.929	8786	2285			1.04	Si
SLV 4	11.45	-1801	2328	573.96		6725	0.9565	9678	2592			1.11	Si
SLV 4	13.92	-916	2475	-107.55		2566	1.275	8846	3158			1.28	Si
SLV 13	11.45	-4193	-2469	-542.44		11746	1.275	10682	3814			1.54	Si
SLV 13	13.92	-1168	-3565	564.81		9040	0.4613	10141	1310			0.37	No, Vu<V
SLV 10	11.45	-3437	-2401	-413.99		9628	1.275	10259	3662			1.53	Si
SLV 10	13.92	-1495	-3288	650.38		8795	0.6069	10092	1715			0.52	No, Vu<V
SLV 16	11.45	-4140	-1406	-369.5		11596	1.275	10653	3803			2.7	Si
SLV 16	13.92	-894	-2354	353.23		4391	0.7272	9212	1876			0.8	No, Vu<V
SLV 15	11.45	-4140	-1406	-369.5		11596	1.275	10653	3803			2.7	Si
SLV 15	13.92	-894	-2354	353.23		4391	0.7272	9212	1876			0.8	No, Vu<V
SLV 14	11.45	-4193	-2469	-542.44		11746	1.275	10682	3814			1.54	Si
SLV 14	13.92	-1168	-3565	564.81		9040	0.4613	10141	1310			0.37	No, Vu<V
SLV 3	11.45	-1801	2328	573.96		6725	0.9565	9678	2592			1.11	Si
SLV 3	13.92	-916	2475	-107.55		2566	1.275	8846	3158			1.28	Si

Verifica a pressoflessione fuori piano D.M. 17-01-18 (N.T.C.)

quota 12.684 Wa 0.05 denominatore 8 γM = 2

Comb.	fd	Sa	σ0	N	M	Mc	Coeff.s.	Verifica
SLV 3	143750	0.52	2914	-1040	112.5	142.17	1.26	Si
SLV 4	143750	0.52	2914	-1040	112.5	142.17	1.26	Si
SLV 1	143750	0.52	3207	-1145	112.5	156.09	1.39	Si
SLV 2	143750	0.52	3207	-1145	112.5	156.09	1.39	Si
SLV 7	143750	0.52	4207	-1502	112.5	203.04	1.8	Si
SLV 8	143750	0.52	4207	-1502	112.5	203.04	1.8	Si
SLV 6	143750	0.52	5184	-1851	112.5	248.12	2.21	Si
SLV 5	143750	0.52	5184	-1851	112.5	248.12	2.21	Si
SLV 11	143750	0.52	5609	-2002	112.5	267.46	2.38	Si
SLV 12	143750	0.52	5609	-2002	112.5	267.46	2.38	Si

Verifica dei meccanismi locali di collasso con analisi cinematica lineare

forza di aggancio al piano = 0 quota mezzeria = 12.684 Wa = 0.05 Ta = 0.0464

Comb.	N top	N base	V orto	α0	M*	e*	a0*	aLim	Verifica
SLV 15	-894	-4140	-61	0.041	243.3	0.889	0.67679	8.74314	No
SLV 16	-894	-4140	-61	0.041	243.3	0.889	0.67679	8.74314	No
SLV 2	-1190	-1855	63	0.042	270.7	0.891	0.67913	8.74314	No
SLV 1	-1190	-1855	63	0.042	270.7	0.891	0.67913	8.74314	No
SLV 12	-583	-3259	-52	0.046	216.2	0.893	0.74077	8.09013	No
SLV 11	-583	-3259	-52	0.046	216.2	0.893	0.74077	8.09013	No
SLV 5	-1501	-2736	54	0.046	300.5	0.895	0.75399	8.09013	No
SLV 6	-1501	-2736	54	0.046	300.5	0.895	0.75399	8.09013	No
SLV 3	-916	-1801	40	0.053	245.3	0.889	0.86417	8.74314	No
SLV 4	-916	-1801	40	0.053	245.3	0.889	0.86417	8.74314	No

Tabella dei coefficienti di sicurezza minimi

Stato limite	Coeff.s.	Comb.	Verifica
PF_SLU	2.462	SLU 35	Si
V_SLU	1.92	SLU 77	Si
PF_SLV	1.283	SLV 13	Si
V_SLV	0.367	SLV 13	No
PFFP_SLV	1.264	SLV 3	Si
R_SLV	0.077	SLV 15	No

Maschio 276

Verifiche condotte secondo D.M. 17-01-18 (N.T.C.)

Dati geometrici

X ini.	Y ini.	X fin.	Y fin.	Quota i.	Quota.s	l	Sp.	h netta	h ini.	h fin.	a	a.s.,sx	a.s.,dx
-11.003	-4.784	-11.003	-3.509	L6	F1	1.275	0.28	2.786	2.465	3.106			

Caratteristiche del materiale

(Circolare 7 21-01-19 C8.5.I) Muratura in mattoni pieni e malta di calce LC2_Corti

fb	fk	fvk0	fmedio	τ0	fv0	μ	ϕ	fv,lim	E	G	FC
600000			345000	9000	20000	0.58	0.77	32500	320000000	128000000	1.2

Verifica a pressoflessione nel piano secondo D.M. 17-01-18 NTC §7.8.2.2.1 in combinazioni non sismiche, γM = 3

Comb.	Quota	N	M	σ0	Mu	c.s.	Verifica
SLU 69	11.45	-4424	163.52	12392	2391.23	14.624	Si
SLU 69	13.92	-1943	385.45	5442	1155.83	2.999	Si
SLU 78	11.45	-4572	159.86	12808	2456.61	15.367	Si
SLU 78	13.92	-1953	386.73	5471	1161.59	3.004	Si
SLU 27	11.45	-3640	135.06	10197	2030.26	15.033	Si
SLU 27	13.92	-1675	343.57	4691	1006.2	2.929	Si
SLU 28	11.45	-3633	133.32	10176	2026.7	15.202	Si
SLU 28	13.92	-1668	344.84	4673	1002.44	2.907	Si
SLU 35	11.45	-3796	133.13	10634	2104.25	15.806	Si
SLU 35	13.92	-1692	343.58	4739	1015.84	2.957	Si
SLU 15	11.45	-3532	122.64	9892	1977.98	16.129	Si
SLU 15	13.92	-1574	317.64	4408	948.9	2.987	Si
SLU 36	11.45	-3789	131.4	10613	2100.74	15.988	Si
SLU 36	13.92	-1685	344.85	4721	1012.09	2.935	Si
SLU 7	11.45	-3376	124.56	9456	1902.17	15.271	Si
SLU 7	13.92	-1557	317.63	4360	939.17	2.957	Si
SLU 70	11.45	-4417	161.78	12371	2387.93	14.76	Si
SLU 70	13.92	-1936	386.72	5424	1152.15	2.979	Si
SLU 6	11.45	-3383	126.29	9476	1905.82	15.09	Si
SLU 6	13.92	-1563	316.36	4379	942.96	2.981	Si

Verifica a pressoflessione nel piano secondo D.M. 17-01-18 NTC §7.8.2.2.1 in combinazioni sismiche, γM = 2

Comb.	Quota	N	M	σ0	Mu	c.s.	Verifica
SLV 1	11.45	-3935	-435.64	11024	2282.51	5.239	Si
SLV 1	13.92	-1307	426.49	3662	808.45	1.896	Si
SLV 2	11.45	-3935	-435.64	11024	2282.51	5.239	Si
SLV 2	13.92	-1307	426.49	3662	808.45	1.896	Si
SLV 6	11.45	-3683	-268.29	10317	2149.85	8.013	Si
SLV 6	13.92	-1578	495.29	4420	969.52	1.957	Si
SLV 3	11.45	-3681	-295.6	10311	2148.6	7.269	Si
SLV 3	13.92	-1014	266.66	2840	631.29	2.367	Si
SLV 10	11.45	-3213	15.19	8999	1897.28	124.917	Si
SLV 10	13.92	-1516	394.44	4247	933.02	2.365	Si
SLV 9	11.45	-3213	15.19	8999	1897.28	124.917	Si
SLV 9	13.92	-1516	394.44	4247	933.02	2.365	Si
SLV 4	11.45	-3681	-295.6	10311	2148.6	7.269	Si
SLV 4	13.92	-1014	266.66	2840	631.29	2.367	Si
SLV 5	11.45	-3683	-268.29	10317	2149.85	8.013	Si
SLV 5	13.92	-1578	495.29	4420	969.52	1.957	Si
SLV 15	11.45	-2112	649.33	5917	1281.41	1.973	Si
SLV 15	13.92	-808	-69.52	2265	505.82	7.276	Si
SLV 16	11.45	-2112	649.33	5917	1281.41	1.973	Si
SLV 16	13.92	-808	-69.52	2265	505.82	7.276	Si

Verifica a taglio nel piano secondo D.M. 17-01-18 (N.T.C.) §7.8.2.2.2 con rottura per scorrimento in combinazioni non sismiche, γM = 3

Comb.	Quota	N	V par	M	σ0	σN	I'	fvd	Vt scorr.	Vt fess.diag.	Vt,lim	c.s.	Verifica
SLU 28	11.45	-3633	343	133.32		10176	1.275	6912	2468			7.2	Si
SLU 28	13.92	-1668	-528	344.84		4673	1.275	6179	2206			4.18	Si
SLU 27	11.45	-3640	337	135.06		10197	1.275	6915	2469			7.33	Si
SLU 27	13.92	-1675	-530	343.57		4691	1.275	6181	2207			4.16	Si
SLU 35	11.45	-3796	308	133.13		10634	1.275	6973	2490			8.07	Si
SLU 35	13.92	-1692	-565	343.58		4739	1.275	6187	2209			3.91	Si
SLU 69	11.45	-4424	442	163.52		12392	1.275	7208	2573			5.82	Si
SLU 69	13.92	-1943	-546	385.45		5442	1.275	6281	2242			4.11	Si
SLU 70	11.45	-4417	448	161.78		12371	1.275	7205	2572			5.74	Si
SLU 70	13.92	-1936	-544	386.72		5424	1.275	6279	2241			4.12	Si
SLU 80	11.45	-4531	432	155.77		12692	1.275	7248	2587			5.99	Si
SLU 80	13.92	-1903	-524	364.61		5330	1.275	6266	2237			4.27	Si
SLU 36	11.45	-3789	314	131.4		10613	1.275	6971	2489			7.92	Si
SLU 36	13.92	-1685	-564	344.85		4721	1.275	6185	2208			3.92	Si
SLU 77	11.45	-4580	414	161.6		12829	1.275	7266	2594			6.27	Si
SLU 77	13.92	-1960	-582	385.46		5490	1.275	6288	2245			3.86	Si
SLU 78	11.45	-4572	420	159.86		12808	1.275	7263	2593			6.18	Si
SLU 78	13.92	-1953	-580	386.73		5471	1.275	6285	2244			3.87	Si
SLU 79	11.45	-4539	426	157.51		12713	1.275	7251	2588			6.07	Si
SLU 79	13.92	-1910	-525	363.34		5349	1.275	6269	2238			4.26	Si

Verifica a taglio nel piano secondo D.M. 17-01-18 (N.T.C.) §7.8.2.2.2 con rottura per scorrimento in combinazioni sismiche, γM = 2

Comb.	Quota	N	V par	M	σ0	σN	I'	fvd	Vt scorr.	Vt fess.diag.	Vt,lim	c.s.	Verifica
SLV 5	11.45	-3683	-1540	-268.29		10317	1.275	10397	3712			2.41	Si
SLV 5	13.92	-1578	-2190	495.29		5805	0.9708	9494	2581			1.18	Si
SLV 4	11.45	-3681	-1231	-295.6		10311	1.275	10396	3711			3.02	Si
SLV 4	13.92	-1014	-2180	266.66		3223	1.1234	8978	2824			1.3	Si
SLV 16	11.45	-2112	2644	649.33		7618	0.9903	9857	2733			1.03	Si
SLV 16	13.92	-808	2577	-69.52		2265	1.275	8786	3137			1.22	Si
SLV 3	11.45	-3681	-1231	-295.6		10311	1.275	10396	3711			3.02	Si
SLV 3	13.92	-1014	-2180	266.66		3223	1.1234	8978	2824			1.3	Si
SLV 12	11.45	-2364	2185	481.98		6623	1.275	9658	3448			1.58	Si
SLV 12	13.92	-538	1814	-138.32		1684	1.141	8670	2770			1.53	Si
SLV 6	11.45	-3683	-1540	-268.29		10317	1.275	10397	3712			2.41	Si
SLV 6	13.92	-1578	-2190	495.29		5805	0.9708	9494	2581			1.18	Si
SLV 11	11.45	-2364	2185	481.98		6623	1.275	9658	3448			1.58	Si
SLV 11	13.92	-538	1814	-138.32		1684	1.141	8670	2770			1.53	Si
SLV 1	11.45	-3935	-2000	-435.64		11024	1.275	10538	3762			1.88	Si
SLV 1	13.92	-1307	-2953	426.49		5000	0.9338	9333	2440			0.83	No, Vu<V
SLV 15	11.45	-2112	2644	649.33		7618	0.9903	9857	2733			1.03	Si
SLV 15	13.92	-808	2577	-69.52		2265	1.275	8786	3137			1.22	Si
SLV 2	11.45	-3935	-2000	-435.64		11024	1.275	10538	3762			1.88	Si
SLV 2	13.92	-1307	-2953	426.49		5000	0.9338	9333	2440			0.83	No, Vu<V

Verifica a pressoflessione fuori piano D.M. 17-01-18 (N.T.C.)

quota 12.683 Wa 0.05 denominatore 8 γM = 2

Comb.	fd	Sa	σ0	N	M	Mc	Coeff.s.	Verifica
SLV 16	143750	0.52	3395	-1212	112.32	164.95	1.47	Si
SLV 15	143750	0.52	3395	-1212	112.32	164.95	1.47	Si
SLV 14	143750	0.52	3892	-1390	112.32	188.34	1.68	Si
SLV 13	143750	0.52	3892	-1390	112.32	188.34	1.68	Si
SLV 12	143750	0.52	3973	-1418	112.32	192.13	1.71	Si
SLV 11	143750	0.52	3973	-1418	112.32	192.13	1.71	Si
SLV 7	143750	0.52	4967	-1773	112.32	238.16	2.12	Si
SLV 8	143750	0.52	4967	-1773	112.32	238.16	2.12	Si
SLV 10	143750	0.52	5632	-2011	112.32	268.52	2.39	Si
SLV 9	143750	0.52	5632	-2011	112.32	268.52	2.39	Si

Verifica dei meccanismi locali di collasso con analisi cinematica lineare

forza di aggancio al piano = 0 quota mezzeria = 12.683 Wa = 0.05 Ta = 0.0463

Comb.	N top	N base	V orto	α0	M*	e*	a0*	aLim	Verifica
SLV 13	-1102	-2367	-61	0.042	262.4	0.89	0.6868	8.7315	No
SLV 14	-1102	-2367	-61	0.042	262.4	0.89	0.6868	8.7315	No
SLV 4	-1014	-3681	57	0.044	254.2	0.889	0.7199	8.7315	No
SLV 3	-1014	-3681	57	0.044	254.2	0.889	0.7199	8.7315	No
SLV 15	-808	-2112	-42	0.052	235.5	0.889	0.84884	8.7315	No
SLV 16	-808	-2112	-42	0.052	235.5	0.889	0.84884	8.7315	No
SLV 9	-1516	-3213	-49	0.049	301.8	0.895	0.78752	8.08048	No
SLV 10	-1516	-3213	-49	0.049	301.8	0.895	0.78752	8.08048	No
SLV 1	-1307	-3935	38	0.054	281.8	0.892	0.87308	8.7315	No
SLV 2	-1307	-3935	38	0.054	281.8	0.892	0.87308	8.7315	No

Tabella dei coefficienti di sicurezza minimi

Stato limite	Coeff.s.	Comb.	Verifica
PF_SLU	2.907	SLU 28	Si
V_SLU	3.859	SLU 77	Si
PF_SLV	1.896	SLV 1	Si
V_SLV	0.826	SLV 1	No
PFFP_SLV	1.469	SLV 15	Si
R_SLV	0.079	SLV 13	No

Maschio 277

Verifiche condotte secondo D.M. 17-01-18 (N.T.C.)

Dati geometrici

X ini.	Y ini.	X fin.	Y fin.	Quota i.	Quota.s	l	Sp.	h netta	h ini.	h fin.	a	a.s.,sx	a.s.,dx
-9.89	-4.784	-11.003	-4.784	L6	F1	1.113	0.3	2.465	2.465	2.465			

Caratteristiche del materiale

(Circolare 7 21-01-19 C8.5.I) Muratura in mattoni pieni e malta di calce LC2_Corti

fb	fk	fvk0	fmedio	τ0	fv0	μ	ϕ	fv,lim	E	G	FC
600000			345000	9000	20000	0.58	0.77	32500	320000000	128000000	1.2

Verifica a pressoflessione nel piano secondo D.M. 17-01-18 NTC §7.8.2.2.1 in combinazioni non sismiche, γM = 3

Comb.	Quota	N	M	σ0	Mu	c.s.	Verifica
SLU 40	11.45	-2238	336.99	6705	1142.88	3.391	Si
SLU 40	13.42	-1062	-143.82	3180	567.62	3.947	Si
SLU 73	11.45	-2926	354.04	8766	1452.96	4.104	Si
SLU 73	13.42	-1353	-187.34	4052	715.11	3.817	Si
SLU 44	11.45	-2933	238.02	8785	1455.79	6.116	Si
SLU 44	13.42	-1301	-182.61	3897	689.12	3.774	Si
SLU 39	11.45	-2232	326.95	6685	1139.81	3.486	Si
SLU 39	13.42	-1050	-134.6	3144	561.42	4.171	Si
SLU 42	11.45	-2431	340.85	7282	1231.68	3.613	Si
SLU 42	13.42	-1228	-158.68	3679	652.49	4.112	Si
SLU 41	11.45	-2424	330.81	7262	1228.66	3.714	Si
SLU 41	13.42	-1216	-149.46	3643	646.37	4.325	Si
SLU 10	11.45	-2223	262.71	6659	1135.66	4.323	Si
SLU 10	13.42	-1015	-145.14	3039	543.43	3.744	Si
SLU 2	11.45	-2269	201.37	6797	1157.11	5.746	Si
SLU 2	13.42	-1020	-145.31	3057	546.47	3.761	Si
SLU 31	11.45	-2263	317.39	6778	1154.11	3.636	Si
SLU 31	13.42	-1072	-150.04	3212	573.05	3.819	Si
SLU 52	11.45	-2887	299.35	8647	1435.59	4.796	Si
SLU 52	13.42	-1295	-182.44	3879	686.15	3.761	Si

Verifica a pressoflessione nel piano secondo D.M. 17-01-18 NTC §7.8.2.2.1 in combinazioni sismiche, γM = 2

Comb.	Quota	N	M	σ0	Mu	c.s.	Verifica
SLV 15	11.45	1838	894.31	0	0	0	No, Trazione
SLV 15	13.42	725	-142.16	0	0	0	No, Trazione
SLV 10	11.45	-1620	52.73	4854	865.73	16.419	Si
SLV 10	13.42	78	249.15	0	0	0	No, Trazione
SLV 9	11.45	-1620	52.73	4854	865.73	16.419	Si
SLV 9	13.42	78	249.15	0	0	0	No, Trazione
SLV 12	11.45	-533	727.99	0	0	0	No, e>l/2
SLV 12	13.42	-970	-454.88	2905	526.68	1.158	Si
SLV 14	11.45	1512	691.73	0	0	0	No, Trazione
SLV 14	13.42	1039	69.05	0	0	0	No, Trazione
SLV 11	11.45	-533	727.99	0	0	0	No, e>l/2
SLV 11	13.42	-970	-454.88	2905	526.68	1.158	Si

Comb.	Quota	N	M	σ0	Mu	c.s.	Verifica
SLV 13	11.45	1512	691.73	0	0	0	No, Trazione
SLV 13	13.42	1039	69.05	0	0	0	No, Trazione
SLV 8	11.45	-2892	382.85	8663	1494.98	3.905	Si
SLV 8	13.42	-2108	-511.72	6314	1112.17	2.173	Si
SLV 16	11.45	1838	894.31	0	0	0	No, Trazione
SLV 16	13.42	725	-142.16	0	0	0	No, Trazione
SLV 7	11.45	-2892	382.85	8663	1494.98	3.905	Si
SLV 7	13.42	-2108	-511.72	6314	1112.17	2.173	Si

Verifica a taglio nel piano secondo D.M. 17-01-18 (N.T.C.) §7.8.2.2.2 con rottura per scorrimento in combinazioni non sismiche, γM = 3

Comb.	Quota	N	V par	M	σ0	σN	l'	fvd	Vt scorr.	Vt fess.diag.	Vt,lim	c.s.	Verifica
SLU 78	11.45	-3308	552	353.14		9908	1.1128	6877	2296			4.16	Si
SLU 78	13.42	-1665	292	-204.46		4987	1.1128	6220	2077			7.12	Si
SLU 73	11.45	-2926	539	354.04		8766	1.1128	6724	2245			4.16	Si
SLU 73	13.42	-1353	278	-187.34		4052	1.1128	6096	2035			7.32	Si
SLU 76	11.45	-3119	560	357.9		9343	1.1128	6801	2270			4.05	Si
SLU 76	13.42	-1519	291	-202.21		4551	1.1128	6162	2057			7.06	Si
SLU 84	11.45	-3095	572	377.5		9271	1.1128	6792	2267			3.96	Si
SLU 84	13.42	-1509	295	-195.98		4519	1.1128	6158	2056			6.97	Si
SLU 82	11.45	-2902	551	373.63		8693	1.1128	6715	2242			4.07	Si
SLU 82	13.42	-1342	281	-181.12		4020	1.1128	6092	2034			7.23	Si
SLU 83	11.45	-3088	545	367.46		9251	1.1128	6789	2266			4.16	Si
SLU 83	13.42	-1496	288	-186.76		4483	1.1128	6153	2054			7.13	Si
SLU 79	11.45	-3301	537	345.04		9887	1.1128	6874	2295			4.28	Si
SLU 79	13.42	-1666	294	-201.69		4989	1.1128	6221	2077			7.07	Si
SLU 80	11.45	-3307	563	355.08		9907	1.1128	6876	2296			4.08	Si
SLU 80	13.42	-1678	301	-210.92		5025	1.1128	6226	2078			6.91	Si
SLU 81	11.45	-2896	525	363.59		8674	1.1128	6712	2241			4.27	Si
SLU 81	13.42	-1330	275	-171.89		3984	1.1128	6087	2032			7.4	Si
SLU 75	11.45	-3115	531	349.27		9331	1.1128	6800	2270			4.27	Si
SLU 75	13.42	-1498	278	-189.6		4488	1.1128	6154	2054			7.38	Si

Verifica a taglio nel piano secondo D.M. 17-01-18 (N.T.C.) §7.8.2.2.2 con rottura per scorrimento in combinazioni sismiche, γM = 2

Comb.	Quota	N	V par	M	σ0	σN	l'	fvd	Vt scorr.	Vt fess.diag.	Vt,lim	c.s.	Verifica
SLV 14	11.45	1512	-887	691.73		0	0	8333	0			0	No, Vu<V
SLV 14	13.42	1039	1132	69.05		0	0	8333	0			0	No, Vu<V
SLV 11	11.45	-533	1240	727.99		0	0	8333	0			0	No, Vu<V
SLV 11	13.42	-970	686	-454.88		12346	0.2618	10802	848			1.24	Si
SLV 8	11.45	-2892	1762	382.85		8663	1.1128	10066	3360			1.91	Si
SLV 8	13.42	-2108	88	-511.72		7468	0.9409	9827	2774			31.38	Si
SLV 15	11.45	1838	-186	894.31		0	0	8333	0			0	No, Vu<V
SLV 15	13.42	725	1248	-142.16		0	0	8333	0			0	No, Vu<V
SLV 7	11.45	-2892	1762	382.85		8663	1.1128	10066	3360			1.91	Si
SLV 7	13.42	-2108	88	-511.72		7468	0.9409	9827	2774			31.38	Si
SLV 13	11.45	1512	-887	691.73		0	0	8333	0			0	No, Vu<V
SLV 13	13.42	1039	1132	69.05		0	0	8333	0			0	No, Vu<V
SLV 10	11.45	-1620	-1096	52.73		4854	1.1128	9304	3106			2.83	Si
SLV 10	13.42	78	298	249.15		0	0	8333	0			0	No, Vu<V
SLV 9	11.45	-1620	-1096	52.73		4854	1.1128	9304	3106			2.83	Si
SLV 9	13.42	78	298	249.15		0	0	8333	0			0	No, Vu<V
SLV 16	11.45	1838	-186	894.31		0	0	8333	0			0	No, Vu<V
SLV 16	13.42	725	1248	-142.16		0	0	8333	0			0	No, Vu<V
SLV 12	11.45	-533	1240	727.99		0	0	8333	0			0	No, Vu<V
SLV 12	13.42	-970	686	-454.88		12346	0.2618	10802	848			1.24	Si

Verifica a pressoflessione fuori piano D.M. 17-01-18 (N.T.C.)

quota 12.682 Wa 0.05 denominatore 8 γM = 2

Comb.	fd	Sa	σ0	N	M	Mc	Coeff.s.	Verifica
SLV 16	143750	0.52	0	418	78.49	0	0	No, Trazione
SLV 15	143750	0.52	0	418	78.49	0	0	No, Trazione
SLV 14	143750	0.52	0	1036	78.49	0	0	No, Trazione
SLV 10	143750	0.52	0	-100	78.49	0	0	No, e>t/2
SLV 13	143750	0.52	0	1036	78.49	0	0	No, Trazione
SLV 9	143750	0.52	0	-100	78.49	0	0	No, e>t/2
SLV 6	143750	0.52	5073	-1694	78.49	243.49	3.1	Si
SLV 5	143750	0.52	5073	-1694	78.49	243.49	3.1	Si
SLV 12	143750	0.52	6479	-2163	78.49	307.25	3.91	Si
SLV 11	143750	0.52	6479	-2163	78.49	307.25	3.91	Si

Verifica dei meccanismi locali di collasso con analisi cinematica lineare

forza di aggancio al piano = 0 quota mezzeria = 12.682 Wa = 0.05 Ta = 0.0338

Comb.	N top	N base	V orto	α0	M*	e*	a0*	aLim	Verifica
SLV 13	854	1512	9	0	0	0	0	7.04959	No, Trazione
SLV 16	374	1838	28	0	0	0	0	7.04959	No, Trazione
SLV 15	374	1838	28	0	0	0	0	7.04959	No, Trazione
SLV 10	608	-1620	-26	0	0	0	0	6.67737	No, Trazione
SLV 14	854	1512	9	0	0	0	0	7.04959	No, Trazione
SLV 9	608	-1620	-26	0	0	0	0	6.67737	No, Trazione
SLV 1	-1450	-6350	-28	0.069	268.7	0.899	1.10737	7.04959	No
SLV 2	-1450	-6350	-28	0.069	268.7	0.899	1.10737	7.04959	No
SLV 5	-83	-3979	-37	0.07	152.5	0.957	1.06625	6.67737	No
SLV 6	-83	-3979	-37	0.07	152.5	0.957	1.06625	6.67737	No

Tabella dei coefficienti di sicurezza minimi

Stato limite	Coeff.s.	Comb.	Verifica
PF_SLU	3.391	SLU 40	Si
V_SLU	3.964	SLU 84	Si
PF_SLV	0	SLV 16	No
V_SLV	0	SLV 9	No

Stato limite	Coeff.s.	Comb.	Verifica
PFFP_SLV	0	SLV 16	No
R_SLV	0	SLV 16	No

Maschio 278

Verifiche condotte secondo D.M. 17-01-18 (N.T.C.)

Dati geometrici

X ini.	Y ini.	X fin.	Y fin.	Quota i.	Quota.s	l	Sp.	h netta	h ini.	h fin.	a	a.s.,sx	a.s.,dx
-7.723	-4.784	-8.05	-4.784	L6	F1	0.327	0.3	2.463	2.463	2.463			

Caratteristiche del materiale

(Circolare 7 21-01-19 C8.5.I) Muratura in mattoni pieni e malta di calce LC2_Corti

fb	fk	fvk0	fmedio	τ0	fv0	μ	ϕ	fv,lim	E	G	FC
600000			345000	9000	20000	0.58	0.77	32500	320000000	128000000	1.2

Verifica a pressoflessione nel piano secondo D.M. 17-01-18 NTC §7.8.2.2.1 in combinazioni non sismiche, γM = 3

Comb.	Quota	N	M	σ0	Mu	c.s.	Verifica
SLU 2	11.45	-1510	2.11	15381	200.4	94.971	Si
SLU 2	13.42	-369	-33.5	3755	57.54	1.717	Si
SLU 65	11.45	-1868	-1.03	19032	234.27	227.061	Si
SLU 65	13.42	-570	-41.88	5804	86.58	2.067	Si
SLU 52	11.45	-1835	-5.49	18691	231.33	42.168	Si
SLU 52	13.42	-547	-39.53	5572	83.38	2.109	Si
SLU 5	11.45	-1617	3.87	16472	211.07	54.55	Si
SLU 5	13.42	-452	-35.06	4601	69.73	1.989	Si
SLU 26	11.45	-1651	-4	16821	214.39	53.569	Si
SLU 26	13.42	-457	-34.43	4660	70.57	2.049	Si
SLU 10	11.45	-1511	-10.22	15389	200.48	19.625	Si
SLU 10	13.42	-352	-30.53	3583	55.01	1.802	Si
SLU 23	11.45	-1544	-5.76	15730	203.87	35.385	Si
SLU 23	13.42	-374	-32.87	3814	58.4	1.776	Si
SLU 13	11.45	-1618	-8.46	16480	211.15	24.969	Si
SLU 13	13.42	-435	-32.09	4429	67.27	2.096	Si
SLU 31	11.45	-1545	-18.09	15738	203.94	11.276	Si
SLU 31	13.42	-357	-29.9	3642	55.88	1.869	Si
SLU 44	11.45	-1834	6.84	18683	231.26	33.812	Si
SLU 44	13.42	-564	-42.5	5745	85.77	2.018	Si

Verifica a pressoflessione nel piano secondo D.M. 17-01-18 NTC §7.8.2.2.1 in combinazioni sismiche, γM = 2

Comb.	Quota	N	M	σ0	Mu	c.s.	Verifica
SLV 6	11.45	5091	98.64	0	0	0	No, Trazione
SLV 6	13.42	-4253	33.13	43324	449.14	13.557	Si
SLV 9	11.45	5113	-22.31	0	0	0	No, Trazione
SLV 9	13.42	-4239	65.18	43176	448.44	6.88	Si
SLV 10	11.45	5113	-22.31	0	0	0	No, Trazione
SLV 10	13.42	-4239	65.18	43176	448.44	6.88	Si
SLV 8	11.45	-7372	24.31	75099	464.86	19.123	Si
SLV 8	13.42	2930	-121.71	0	0	0	No, Trazione
SLV 1	11.45	704	213.73	0	0	0	No, Trazione
SLV 1	13.42	-1756	-58.45	17888	245.26	4.196	Si
SLV 4	11.45	-3035	191.44	30918	370.94	1.938	Si
SLV 4	13.42	399	-104.91	0	0	0	No, Trazione
SLV 7	11.45	-7372	24.31	75099	464.86	19.123	Si
SLV 7	13.42	2930	-121.71	0	0	0	No, Trazione
SLV 5	11.45	5091	98.64	0	0	0	No, Trazione
SLV 5	13.42	-4253	33.13	43324	449.14	13.557	Si
SLV 3	11.45	-3035	191.44	30918	370.94	1.938	Si
SLV 3	13.42	399	-104.91	0	0	0	No, Trazione
SLV 2	11.45	704	213.73	0	0	0	No, Trazione
SLV 2	13.42	-1756	-58.45	17888	245.26	4.196	Si

Verifica a taglio nel piano secondo D.M. 17-01-18 (N.T.C.) §7.8.2.2.2 con rottura per scorrimento in combinazioni non sismiche, γM = 3

Comb.	Quota	N	V par	M	σ0	σN	l'	fvd	Vt scorr.	Vt fess.diag.	Vt,lim	c.s.	Verifica
SLU 68	11.45	-1975	87	0.73		20123	0.3272	8239	809			9.32	Si
SLU 68	13.42	-653	-44	-43.44		7472	0.2912	6552	572			13.09	Si
SLU 47	11.45	-1941	89	8.6		19774	0.3272	8192	804			9.05	Si
SLU 47	13.42	-647	-41	-44.06		7527	0.2865	6559	564			13.8	Si
SLU 52	11.45	-1835	81	-5.49		18691	0.3272	8048	790			9.72	Si
SLU 52	13.42	-547	-30	-39.53		6654	0.274	6443	530			17.52	Si
SLU 2	11.45	-1510	82	2.11		15381	0.3272	7606	747			9.12	Si
SLU 2	13.42	-369	-24	-33.5		5631	0.2182	6306	413			17.11	Si
SLU 26	11.45	-1651	81	-4		16821	0.3272	7798	766			9.42	Si
SLU 26	13.42	-457	-37	-34.43		5754	0.265	6323	503			13.56	Si
SLU 44	11.45	-1834	87	6.84		18683	0.3272	8047	790			9.03	Si
SLU 44	13.42	-564	-31	-42.5		7101	0.2647	6502	516			16.78	Si
SLU 65	11.45	-1868	85	-1.03		19032	0.3272	8093	795			9.31	Si
SLU 65	13.42	-570	-34	-41.88		7025	0.2703	6492	527			15.65	Si
SLU 5	11.45	-1617	83	3.87		16472	0.3272	7752	761			9.13	Si
SLU 5	13.42	-452	-34	-35.06		5836	0.258	6334	490			14.33	Si
SLU 55	11.45	-1942	83	-3.73		19782	0.3272	8193	804			9.72	Si
SLU 55	13.42	-630	-40	-41.09		7115	0.2952	6504	576			14.29	Si
SLU 23	11.45	-1544	80	-5.76		15730	0.3272	7653	751			9.41	Si
SLU 23	13.42	-374	-27	-32.87		5487	0.2275	6287	429			15.89	Si

Verifica a taglio nel piano secondo D.M. 17-01-18 (N.T.C.) §7.8.2.2.2 con rottura per scorrimento in combinazioni sismiche, γM = 2

Comb.	Quota	N	V par	M	σ0	σN	I'	fvd	Vt scorr.	Vt fess.diag.	Vt,lim	c.s.	Verifica
SLV 5	11.45	5091	-717	98.64		0	0	8333	0			0	No, Vu<V
SLV 5	13.42	-4253	348	33.13		43324	0.3272	16250	1595			4.58	Si
SLV 1	11.45	704	-8	213.73		0	0	8333	0			0	No, Vu<V
SLV 1	13.42	-1756	113	-58.45		17888	0.3272	11911	1169			10.35	Si
SLV 9	11.45	5113	-848	-22.31		0	0	8333	0			0	No, Vu<V
SLV 9	13.42	-4239	331	65.18		43176	0.3272	16250	1595			4.82	Si
SLV 7	11.45	-7372	875	24.31		75099	0.3272	16250	1595			1.82	Si
SLV 7	13.42	2930	-383	-121.71		0	0	8333	0			0	No, Vu<V
SLV 10	11.45	5113	-848	-22.31		0	0	8333	0			0	No, Vu<V
SLV 10	13.42	-4239	331	65.18		43176	0.3272	16250	1595			4.82	Si
SLV 8	11.45	-7372	875	24.31		75099	0.3272	16250	1595			1.82	Si
SLV 8	13.42	2930	-383	-121.71		0	0	8333	0			0	No, Vu<V
SLV 2	11.45	704	-8	213.73		0	0	8333	0			0	No, Vu<V
SLV 2	13.42	-1756	113	-58.45		17888	0.3272	11911	1169			10.35	Si
SLV 4	11.45	-3035	470	191.44		33542	0.3016	15042	1361			2.9	Si
SLV 4	13.42	399	-106	-104.91		0	0	8333	0			0	No, Vu<V
SLV 6	11.45	5091	-717	98.64		0	0	8333	0			0	No, Vu<V
SLV 6	13.42	-4253	348	33.13		43324	0.3272	16250	1595			4.58	Si
SLV 3	11.45	-3035	470	191.44		33542	0.3016	15042	1361			2.9	Si
SLV 3	13.42	399	-106	-104.91		0	0	8333	0			0	No, Vu<V

Verifica a pressoflessione fuori piano D.M. 17-01-18 (N.T.C.)

quota 12.681 Wa 0.05 denominatore 8 γM = 2

Comb.	fd	Sa	σ0	N	M	Mc	Coeff.s.	Verifica
SLV 9	143750	0.52	7458	-732	23.04	103.12	4.48	Si
SLV 10	143750	0.52	7458	-732	23.04	103.12	4.48	Si
SLV 13	143750	0.52	7890	-775	23.04	108.68	4.72	Si
SLV 14	143750	0.52	7890	-775	23.04	108.68	4.72	Si
SLV 6	143750	0.52	7961	-782	23.04	109.6	4.76	Si
SLV 5	143750	0.52	7961	-782	23.04	109.6	4.76	Si
SLV 15	143750	0.52	8764	-860	23.04	119.79	5.2	Si
SLV 16	143750	0.52	8764	-860	23.04	119.79	5.2	Si
SLV 2	143750	0.52	9567	-939	23.04	129.85	5.64	Si
SLV 1	143750	0.52	9567	-939	23.04	129.85	5.64	Si

Verifica dei meccanismi locali di collasso con analisi cinematica lineare

forza di aggancio al piano = 0 quota mezzeria = 12.681 Wa = 0.05 Ta = 0.0338

Comb.	N top	N base	V orto	α0	M*	e*	a0*	aLim	Verifica
SLV 3	201	-3035	-27	0	0	0	0	7.0426	No, Trazione
SLV 4	201	-3035	-27	0	0	0	0	7.0426	No, Trazione
SLV 2	-599	704	-28	0	0	0	0	7.0426	No, Trazione
SLV 10	-1710	5113	9	0	0	0	0	6.67144	No, Trazione
SLV 6	-1629	5091	-8	0	0	0	0	6.67144	No, Trazione
SLV 7	1040	-7372	-5	0	0	0	0	6.67144	No, Trazione
SLV 1	-599	704	-28	0	0	0	0	7.0426	No, Trazione
SLV 9	-1710	5113	9	0	0	0	0	6.67144	No, Trazione
SLV 8	1040	-7372	-5	0	0	0	0	6.67144	No, Trazione
SLV 5	-1629	5091	-8	0	0	0	0	6.67144	No, Trazione

Tabella dei coefficienti di sicurezza minimi

Stato limite	Coeff.s.	Comb.	Verifica
PF_SLU	1.717	SLU 2	Si
V_SLU	9.032	SLU 44	Si
PF_SLV	0	SLV 16	No
V_SLV	0	SLV 1	No
PFFP_SLV	4.475	SLV 9	Si
R_SLV	0	SLV 14	No

Maschio 281

Verifiche condotte secondo D.M. 17-01-18 (N.T.C.)

Dati geometrici

X ini.	Y ini.	X fin.	Y fin.	Quota i.	Quota.s	l	Sp.	h netta	h ini.	h fin.	a	a.s.,sx	a.s.,dx
-13.753	-4.784	-13.075	-4.784	L2	Z medio 271 cm	0.678	0.3	2.71	2.71	2.71			

Caratteristiche del materiale

(Circolare 7 21-01-19 C8.5.I) Muratura in mattoni pieni e malta di calce LC2_Corti

fb	fk	fvk0	fmedio	τ0	fv0	μ	ϕ	fv,lim	E	G	FC
600000			345000	9000	20000	0.58	0.77	32500	320000000	128000000	1.2

Verifica a pressoflessione nel piano secondo D.M. 17-01-18 NTC §7.8.2.2.1 in combinazioni non sismiche, γM = 3

Comb.	Quota	N	M	σ0	Mu	c.s.	Verifica
SLU 82	0	-12996	-474.86	63933	947.23	1.995	Si
SLU 82	2.5	-10976	434.8	53994	1253.67	2.883	Si
SLU 80	0	-12824	-467.19	63087	979.83	2.097	Si
SLU 80	2.5	-10876	436.67	53504	1264.46	2.896	Si
SLU 81	0	-12897	-481.7	63449	966.05	2.005	Si
SLU 81	2.5	-10849	414.36	53373	1267.27	3.058	Si
SLU 78	0	-12857	-467.43	63249	973.7	2.083	Si
SLU 78	2.5	-10895	436.29	53599	1262.4	2.893	Si
SLU 84	0	-13113	-480.57	64508	924.42	1.924	Si
SLU 84	2.5	-11102	442.36	54618	1239.35	2.802	Si
SLU 74	0	-12641	-468.57	62190	1013.07	2.162	Si

Comb.	Quota	N	M	σ0	Mu	c.s.	Verifica
SLU 74	2.5	-10642	408.29	52355	1288.18	3.155	Si
SLU 83	0	-13014	-487.4	64023	943.71	1.936	Si
SLU 83	2.5	-10976	421.92	53997	1253.61	2.971	Si
SLU 75	0	-12740	-461.73	62675	995.28	2.156	Si
SLU 75	2.5	-10769	428.73	52976	1275.64	2.975	Si
SLU 79	0	-12725	-474.03	62602	997.95	2.105	Si
SLU 79	2.5	-10750	416.23	52883	1277.55	3.069	Si
SLU 77	0	-12758	-474.27	62764	991.96	2.092	Si
SLU 77	2.5	-10769	415.85	52978	1275.59	3.067	Si

Verifica a pressoflessione nel piano secondo D.M. 17-01-18 NTC §7.8.2.2.1 in combinazioni sismiche, γM = 2

Comb.	Quota	N	M	σ0	Mu	c.s.	Verifica
SLV 1	0	-9934	-1526.82	48872	2019.46	1.323	Si
SLV 1	2.5	-18620	2262.28	91600	1579.12	0.698	No, M>Mu
SLV 11	0	-2368	7.25	11648	725.7	100.103	Si
SLV 11	2.5	1635	-690.1	0	0	0	No, Trazione
SLV 15	0	-8046	869.55	39584	1842.88	2.119	Si
SLV 15	2.5	3539	-1684.61	0	0	0	No, Trazione
SLV 7	0	-1680	-716.32	0	0	0	No, e>l/2
SLV 7	2.5	-3855	417.43	18965	1103.36	2.643	Si
SLV 8	0	-1680	-716.32	0	0	0	No, e>l/2
SLV 8	2.5	-3855	417.43	18965	1103.36	2.643	Si
SLV 12	0	-2368	7.25	11648	725.7	100.103	Si
SLV 12	2.5	1635	-690.1	0	0	0	No, Trazione
SLV 13	0	-12226	885.09	60146	2103.15	2.376	Si
SLV 13	2.5	-319	-1429.51	0	0	0	No, e>l/2
SLV 14	0	-12226	885.09	60146	2103.15	2.376	Si
SLV 14	2.5	-319	-1429.51	0	0	0	No, e>l/2
SLV 2	0	-9934	-1526.82	48872	2019.46	1.323	Si
SLV 2	2.5	-18620	2262.28	91600	1579.12	0.698	No, M>Mu
SLV 16	0	-8046	869.55	39584	1842.88	2.119	Si
SLV 16	2.5	3539	-1684.61	0	0	0	No, Trazione

Verifica a taglio nel piano secondo D.M. 17-01-18 (N.T.C.) §7.8.2.2.2 con rottura per scorrimento in combinazioni non sismiche, γM = 3

Comb.	Quota	N	V par	M	σ0	σN	l'	fvd	Vt scorr.	Vt fess.diag.	Vt,lim	c.s.	Verifica
SLU 82	0	-12996	1033	-474.86		63933	0.6776	10833	2202			2.13	Si
SLU 82	2.5	-10976	-925	434.8		53994	0.6776	10833	2202			2.38	Si
SLU 75	0	-12740	1013	-461.73		62675	0.6776	10833	2202			2.17	Si
SLU 75	2.5	-10769	-913	428.73		52976	0.6776	10833	2202			2.41	Si
SLU 81	0	-12897	999	-481.7		63449	0.6776	10833	2202			2.2	Si
SLU 81	2.5	-10849	-879	414.36		53373	0.6776	10833	2202			2.5	Si
SLU 77	0	-12758	986	-474.27		62764	0.6776	10833	2202			2.23	Si
SLU 77	2.5	-10769	-887	415.85		52978	0.6776	10833	2202			2.48	Si
SLU 78	0	-12857	1020	-467.43		63249	0.6776	10833	2202			2.16	Si
SLU 78	2.5	-10895	-932	436.29		53599	0.6776	10833	2202			2.36	Si
SLU 80	0	-12824	1016	-467.19		63087	0.6776	10833	2202			2.17	Si
SLU 80	2.5	-10876	-935	436.67		53504	0.6776	10833	2202			2.35	Si
SLU 73	0	-12656	1023	-451.23		62262	0.6776	10833	2202			2.15	Si
SLU 73	2.5	-10707	-928	435.16		52671	0.6776	10833	2202			2.37	Si
SLU 84	0	-13113	1040	-480.57		64508	0.6776	10833	2202			2.12	Si
SLU 84	2.5	-11102	-944	442.36		54618	0.6776	10833	2202			2.33	Si
SLU 76	0	-12773	1031	-456.93		62836	0.6776	10833	2202			2.14	Si
SLU 76	2.5	-10833	-947	442.73		53295	0.6776	10833	2202			2.33	Si
SLU 83	0	-13014	1007	-487.4		64023	0.6776	10833	2202			2.19	Si
SLU 83	2.5	-10976	-898	421.92		53997	0.6776	10833	2202			2.45	Si

Verifica a taglio nel piano secondo D.M. 17-01-18 (N.T.C.) §7.8.2.2.2 con rottura per scorrimento in combinazioni sismiche, γM = 2

Comb.	Quota	N	V par	M	σ0	σN	l'	fvd	Vt scorr.	Vt fess.diag.	Vt,lim	c.s.	Verifica
SLV 16	0	-8046	1352	869.55		39584	0.6776	16250	3303			2.44	Si
SLV 16	2.5	3539	5633	-1684.61		0	0	8333	0			0	No, Vu<V
SLV 13	0	-12226	2308	885.09		60146	0.6776	16250	3303			1.43	Si
SLV 13	2.5	-319	5180	-1429.51		0	0	8333	0			0	No, Vu<V
SLV 14	0	-12226	2308	885.09		60146	0.6776	16250	3303			1.43	Si
SLV 14	2.5	-319	5180	-1429.51		0	0	8333	0			0	No, Vu<V
SLV 3	0	-5755	-919	-1542.36		90358	0.2123	16250	1035			1.13	Si
SLV 3	2.5	-14762	-6410	2007.18		80871	0.6084	16250	2966			0.46	No, Vu<V
SLV 8	0	-1680	-1239	-716.32		0	0	8333	0			0	No, Vu<V
SLV 8	2.5	-3855	-1667	417.43		18965	0.6776	12126	2465			1.48	Si
SLV 11	0	-2368	-558	7.25		11648	0.6776	10663	2167			3.89	Si
SLV 11	2.5	1635	1946	-690.1		0	0	8333	0			0	No, Vu<V
SLV 4	0	-5755	-919	-1542.36		90358	0.2123	16250	1035			1.13	Si
SLV 4	2.5	-14762	-6410	2007.18		80871	0.6084	16250	2966			0.46	No, Vu<V
SLV 15	0	-8046	1352	869.55		39584	0.6776	16250	3303			2.44	Si
SLV 15	2.5	3539	5633	-1684.61		0	0	8333	0			0	No, Vu<V
SLV 12	0	-2368	-558	7.25		11648	0.6776	10663	2167			3.89	Si
SLV 12	2.5	1635	1946	-690.1		0	0	8333	0			0	No, Vu<V
SLV 7	0	-1680	-1239	-716.32		0	0	8333	0			0	No, Vu<V
SLV 7	2.5	-3855	-1667	417.43		18965	0.6776	12126	2465			1.48	Si

Verifica a pressoflessione fuori piano D.M. 17-01-18 (N.T.C.)

quota 1.355 Wa 0.05 denominatore 8 γM = 2

Comb.	fd	Sa	σ0	N	M	Mc	Coeff.s.	Verifica
SLV 11	143750	0.27	5032	-1023	31.28	147.11	4.7	Si
SLV 12	143750	0.27	5032	-1023	31.28	147.11	4.7	Si
SLV 16	143750	0.27	13077	-2658	31.28	356.06	11.38	Si
SLV 15	143750	0.27	13077	-2658	31.28	356.06	11.38	Si
SLV 7	143750	0.27	13955	-2837	31.28	376.92	12.05	Si
SLV 8	143750	0.27	13955	-2837	31.28	376.92	12.05	Si
SLV 14	143750	0.27	28896	-5874	31.28	672.71	21.5	Si
SLV 13	143750	0.27	28896	-5874	31.28	672.71	21.5	Si

Comb.	fd	Sa	σ0	N	M	Mc	Coeff.s.	Verifica
SLV 4	143750	0.27	42822	-8705	31.28	848.09	27.11	Si
SLV 3	143750	0.27	42822	-8705	31.28	848.09	27.11	Si

Verifica dei meccanismi locali di collasso con analisi cinematica lineare

forza di aggancio al piano = 0 quota mezzeria = 1.355 Wa = 0.05 Ta = 0.0409

Comb.	N top	N base	V orto	α0	M*	e*	a0*	aLim	Verifica
SLV 12	412	-2368	-18	0	0	0	0	4.60598	No, Trazione
SLV 11	412	-2368	-18	0	0	0	0	4.60598	No, Trazione
SLV 16	589	-8046	-2	0	0	0	0	4.92673	No, Trazione
SLV 15	589	-8046	-2	0	0	0	0	4.92673	No, Trazione
SLV 4	-10008	-5755	-13	0.057	1096.6	0.978	0.84288	4.92673	No
SLV 3	-10008	-5755	-13	0.057	1096.6	0.978	0.84288	4.92673	No
SLV 2	-13036	-9934	-2	0.057	1405.1	0.983	0.84615	4.92673	No
SLV 1	-13036	-9934	-2	0.057	1405.1	0.983	0.84615	4.92673	No
SLV 5	-12859	-15613	14	0.056	1387.1	0.982	0.83338	4.60598	No
SLV 6	-12859	-15613	14	0.056	1387.1	0.982	0.83338	4.60598	No

Tabella dei coefficienti di sicurezza minimi

Stato limite	Coeff.s.	Comb.	Verifica
PF_SLU	1.924	SLU 84	Si
V_SLU	2.117	SLU 84	Si
PF_SLV	0	SLV 16	No
V_SLV	0	SLV 7	No
PFFP_SLV	4.702	SLV 11	Si
R_SLV	0	SLV 16	No

Maschio 282

Verifiche condotte secondo D.M. 17-01-18 (N.T.C.)

Dati geometrici

X ini.	Y ini.	X fin.	Y fin.	Quota i.	Quota.s	l	Sp.	h netta	h ini.	h fin.	a	a.s.,sx	a.s.,dx
-11.675	-4.784	-11.003	-4.784	L2	Z medio 271 cm	0.672	0.3	2.71	2.71	2.71			

Caratteristiche del materiale

(Circolare 7 21-01-19 C8.5.I) Muratura in mattoni pieni e malta di calce LC2_Corti

fb	fk	fvk0	fmedio	τ0	fv0	μ	ϕ	fv,lim	E	G	FC
600000			345000	9000	20000	0.58	0.77	32500	320000000	128000000	1.2

Verifica a pressoflessione nel piano secondo D.M. 17-01-18 NTC §7.8.2.2.1 in combinazioni non sismiche, γM = 3

Comb.	Quota	N	M	σ0	Mu	c.s.	Verifica
SLU 80	0	-10603	110.4	52555	1264.98	11.459	Si
SLU 80	2.5	-12545	-774.21	62180	998.24	1.289	Si
SLU 81	0	-10599	156.97	52539	1265.29	8.061	Si
SLU 81	2.5	-12597	-774.08	62439	988.94	1.278	Si
SLU 77	0	-10544	143.44	52263	1270.65	8.858	Si
SLU 77	2.5	-12462	-758.48	61771	1012.73	1.335	Si
SLU 82	0	-10680	124.44	52936	1257.35	10.104	Si
SLU 82	2.5	-12712	-792.77	63010	968.01	1.221	Si
SLU 76	0	-10542	89.13	52255	1270.8	14.258	Si
SLU 76	2.5	-12499	-782.21	61953	1006.31	1.286	Si
SLU 73	0	-10428	89.56	51691	1281.36	14.308	Si
SLU 73	2.5	-12376	-777.74	61345	1027.49	1.321	Si
SLU 78	0	-10624	110.91	52660	1262.89	11.387	Si
SLU 78	2.5	-12577	-777.17	62342	992.44	1.277	Si
SLU 75	0	-10510	111.33	52096	1273.83	11.442	Si
SLU 75	2.5	-12455	-772.7	61734	1014.01	1.312	Si
SLU 83	0	-10713	156.55	53103	1253.93	8.01	Si
SLU 83	2.5	-12719	-778.54	63047	966.65	1.242	Si
SLU 84	0	-10793	124.01	53500	1245.62	10.045	Si
SLU 84	2.5	-12835	-797.24	63618	945.14	1.186	Si

Verifica a pressoflessione nel piano secondo D.M. 17-01-18 NTC §7.8.2.2.1 in combinazioni sismiche, γM = 2

Comb.	Quota	N	M	σ0	Mu	c.s.	Verifica
SLV 13	0	-6409	597.61	31767	1594.67	2.668	Si
SLV 13	2.5	-19909	-2580.77	98682	1287.77	0.499	No, M>Mu
SLV 1	0	-12084	-636.9	59899	2071.36	3.252	Si
SLV 1	2.5	-1629	1193.29	0	0	0	No, e>l/2
SLV 12	0	-590	655.6	0	0	0	No, e>l/2
SLV 12	2.5	-4750	-564.27	23543	1289.32	2.285	Si
SLV 11	0	-590	655.6	0	0	0	No, e>l/2
SLV 11	2.5	-4750	-564.27	23543	1289.32	2.285	Si
SLV 14	0	-6409	597.61	31767	1594.67	2.668	Si
SLV 14	2.5	-19909	-2580.77	98682	1287.77	0.499	No, M>Mu
SLV 8	0	-2293	285.25	11364	699.2	2.451	Si
SLV 8	2.5	734	567.95	0	0	0	No, Trazione
SLV 2	0	-12084	-636.9	59899	2071.36	3.252	Si
SLV 2	2.5	-1629	1193.29	0	0	0	No, e>l/2
SLV 3	0	-8482	-410.72	42043	1870.66	4.555	Si
SLV 3	2.5	2414	1514.32	0	0	0	No, Trazione
SLV 4	0	-8482	-410.72	42043	1870.66	4.555	Si
SLV 4	2.5	2414	1514.32	0	0	0	No, Trazione
SLV 7	0	-2293	285.25	11364	699.2	2.451	Si
SLV 7	2.5	734	567.95	0	0	0	No, Trazione

Verifica a taglio nel piano secondo D.M. 17-01-18 (N.T.C.) §7.8.2.2.2 con rottura per scorrimento in combinazioni non sismiche, γM = 3

Comb.	Quota	N	V par	M	σ0	σN	l'	fvd	Vt scorr.	Vt fess.diag.	Vt,lim	c.s.	Verifica
SLU 76	0	-10542	-1461	89.13		52255	0.6725	10833	2186			1.5	Si
SLU 76	2.5	-12499	1988	-782.21		61953	0.6725	10833	2186			1.1	Si
SLU 83	0	-10713	-1333	156.55		53103	0.6725	10833	2186			1.64	Si
SLU 83	2.5	-12719	2009	-778.54		63047	0.6725	10833	2186			1.09	Si
SLU 81	0	-10599	-1317	156.97		52539	0.6725	10833	2186			1.66	Si
SLU 81	2.5	-12597	2001	-774.08		62439	0.6725	10833	2186			1.09	Si
SLU 73	0	-10428	-1444	89.56		51691	0.6725	10833	2186			1.51	Si
SLU 73	2.5	-12376	1980	-777.74		61345	0.6725	10833	2186			1.1	Si
SLU 77	0	-10544	-1318	143.44		52263	0.6725	10833	2186			1.66	Si
SLU 77	2.5	-12462	1951	-758.48		61771	0.6725	10833	2186			1.12	Si
SLU 82	0	-10680	-1414	124.44		52936	0.6725	10833	2186			1.55	Si
SLU 82	2.5	-12712	2033	-792.77		63010	0.6725	10833	2186			1.08	Si
SLU 78	0	-10624	-1415	110.91		52660	0.6725	10833	2186			1.54	Si
SLU 78	2.5	-12577	1983	-777.17		62342	0.6725	10833	2186			1.1	Si
SLU 80	0	-10603	-1412	110.4		52555	0.6725	10833	2186			1.55	Si
SLU 80	2.5	-12545	1974	-774.21		62180	0.6725	10833	2186			1.11	Si
SLU 75	0	-10510	-1399	111.33		52096	0.6725	10833	2186			1.56	Si
SLU 75	2.5	-12455	1975	-772.7		61734	0.6725	10833	2186			1.11	Si
SLU 84	0	-10793	-1430	124.01		53500	0.6725	10833	2186			1.53	Si
SLU 84	2.5	-12835	2041	-797.24		63618	0.6725	10833	2186			1.07	Si

Verifica a taglio nel piano secondo D.M. 17-01-18 (N.T.C.) §7.8.2.2.2 con rottura per scorrimento in combinazioni sismiche, γM = 2

Comb.	Quota	N	V par	M	σ0	σN	l'	fvd	Vt scorr.	Vt fess.diag.	Vt,lim	c.s.	Verifica
SLV 7	0	-2293	498	285.25		12026	0.6355	10739	2047			4.11	Si
SLV 7	2.5	734	-1869	567.95		0	0	8333	0			0	No, Vu<V
SLV 1	0	-12084	-2292	-636.9		59899	0.6725	16250	3278			1.43	Si
SLV 1	2.5	-1629	-4721	1193.29		0	0	8333	0			0	No, Vu<V
SLV 12	0	-590	1012	655.6		0	0	8333	0			0	No, Vu<V
SLV 12	2.5	-4750	2021	-564.27		24271	0.6523	13187	2581			1.28	Si
SLV 3	0	-8482	-1281	-410.72		42043	0.6725	16250	3278			2.56	Si
SLV 3	2.5	2414	-5499	1514.32		0	0	8333	0			0	No, Vu<V
SLV 2	0	-12084	-2292	-636.9		59899	0.6725	16250	3278			1.43	Si
SLV 2	2.5	-1629	-4721	1193.29		0	0	8333	0			0	No, Vu<V
SLV 14	0	-6409	-580	597.61		31767	0.6725	14687	2963			5.11	Si
SLV 14	2.5	-19909	8243	-2580.77		107064	0.6198	16250	3022			0.37	No, Vu<V
SLV 8	0	-2293	498	285.25		12026	0.6355	10739	2047			4.11	Si
SLV 8	2.5	734	-1869	567.95		0	0	8333	0			0	No, Vu<V
SLV 4	0	-8482	-1281	-410.72		42043	0.6725	16250	3278			2.56	Si
SLV 4	2.5	2414	-5499	1514.32		0	0	8333	0			0	No, Vu<V
SLV 13	0	-6409	-580	597.61		31767	0.6725	14687	2963			5.11	Si
SLV 13	2.5	-19909	8243	-2580.77		107064	0.6198	16250	3022			0.37	No, Vu<V
SLV 11	0	-590	1012	655.6		0	0	8333	0			0	No, Vu<V
SLV 11	2.5	-4750	2021	-564.27		24271	0.6523	13187	2581			1.28	Si

Verifica a pressoflessione fuori piano D.M. 17-01-18 (N.T.C.)

quota 1.355 Wa 0.05 denominatore 8 γM = 2

Comb.	fd	Sa	σ0	N	M	Mc	Coeff.s.	Verifica
SLV 7	143750	0.27	8454	-1705	31.05	238.12	7.67	Si
SLV 8	143750	0.27	8454	-1705	31.05	238.12	7.67	Si
SLV 11	143750	0.27	11288	-2277	31.05	310.03	9.99	Si
SLV 12	143750	0.27	11288	-2277	31.05	310.03	9.99	Si
SLV 4	143750	0.27	23625	-4766	31.05	576.7	18.57	Si
SLV 3	143750	0.27	23625	-4766	31.05	576.7	18.57	Si
SLV 15	143750	0.27	33072	-6672	31.05	729.93	23.51	Si
SLV 16	143750	0.27	33072	-6672	31.05	729.93	23.51	Si
SLV 1	143750	0.27	39463	-7961	31.05	808.52	26.04	Si
SLV 2	143750	0.27	39463	-7961	31.05	808.52	26.04	Si

Verifica dei meccanismi locali di collasso con analisi cinematica lineare

forza di aggancio al piano = 0 quota mezzeria = 1.355 Wa = 0.05 Ta = 0.0409

Comb.	N top	N base	V orto	α0	M*	e*	a0*	aLim	Verifica
SLV 14	-13832	-6409	6	0.057	1485.7	0.984	0.83977	4.92673	No
SLV 13	-13832	-6409	6	0.057	1485.7	0.984	0.83977	4.92673	No
SLV 16	-10667	-2806	-12	0.057	1163.1	0.979	0.84099	4.92673	No
SLV 15	-10667	-2806	-12	0.057	1163.1	0.979	0.84099	4.92673	No
SLV 7	-47	-2293	-29	0.053	101.1	0.962	0.8003	4.60598	No
SLV 8	-47	-2293	-29	0.053	101.1	0.962	0.8003	4.60598	No
SLV 6	-10598	-14301	33	0.055	1156.2	0.979	0.81406	4.60598	No
SLV 5	-10598	-14301	33	0.055	1156.2	0.979	0.81406	4.60598	No
SLV 10	-13795	-12598	30	0.055	1481.9	0.984	0.81466	4.60598	No
SLV 9	-13795	-12598	30	0.055	1481.9	0.984	0.81466	4.60598	No

Tabella dei coefficienti di sicurezza minimi

Stato limite	Coeff.s.	Comb.	Verifica
PF_SLU	1.186	SLU 84	Si
V_SLU	1.071	SLU 84	Si
PF_SLV	0	SLV 8	No
V_SLV	0	SLV 1	No
PFFP_SLV	7.669	SLV 7	Si
R_SLV	0.17	SLV 13	No

Maschio 283

Verifiche condotte secondo D.M. 17-01-18 (N.T.C.)

Dati geometrici

X ini.	Y ini.	X fin.	Y fin.	Quota i.	Quota.s	l	Sp.	h netta	h ini.	h fin.	a	a.s.,sx	a.s.,dx
-13.753	-4.784	-12.933	-4.784	Z medio 271 cm	Z medio 611 cm	0.82	0.3	3.4	3.4	3.4			

Caratteristiche del materiale

(Circolare 7 21-01-19 C8.5.I) Muratura in mattoni pieni e malta di calce LC2_Corti

fb	fk	fvk0	fmedio	τ0	fv0	μ	ϕ	fv,lim	E	G	FC
600000			345000	9000	20000	0.58	0.77	32500	320000000	128000000	1.2

Verifica a pressoflessione nel piano secondo D.M. 17-01-18 NTC §7.8.2.2.1 in combinazioni non sismiche, γM = 3

Comb.	Quota	N	M	σ0	Mu	c.s.	Verifica
SLU 78	3.66	-10099	390.98	41049	2054.32	5.254	Si
SLU 78	5.66	-8061	142.69	32766	1975.91	13.848	Si
SLU 75	3.66	-9990	389.58	40603	2054.43	5.273	Si
SLU 75	5.66	-7936	136.18	32257	1965.55	14.434	Si
SLU 76	3.66	-10016	391.62	40712	2054.45	5.246	Si
SLU 76	5.66	-7950	139.49	32314	1966.75	14.1	Si
SLU 83	3.66	-10188	391.62	41408	2053.88	5.245	Si
SLU 83	5.66	-8123	137.04	33017	1980.79	14.454	Si
SLU 77	3.66	-10016	384.29	40710	2054.45	5.346	Si
SLU 77	5.66	-8020	139.85	32598	1972.57	14.105	Si
SLU 73	3.66	-9907	390.21	40266	2054.18	5.264	Si
SLU 73	5.66	-7825	132.98	31805	1955.83	14.708	Si
SLU 81	3.66	-10078	390.21	40962	2054.38	5.265	Si
SLU 81	5.66	-7998	130.53	32508	1970.75	15.098	Si
SLU 82	3.66	-10161	396.91	41301	2054.04	5.175	Si
SLU 82	5.66	-8039	133.37	32676	1974.12	14.802	Si
SLU 84	3.66	-10271	398.31	41747	2053.16	5.155	Si
SLU 84	5.66	-8164	139.88	33185	1983.95	14.183	Si
SLU 80	3.66	-10071	388.56	40933	2054.4	5.287	Si
SLU 80	5.66	-8048	144.11	32712	1974.84	13.704	Si

Verifica a pressoflessione nel piano secondo D.M. 17-01-18 NTC §7.8.2.2.1 in combinazioni sismiche, γM = 2

Comb.	Quota	N	M	σ0	Mu	c.s.	Verifica
SLV 12	3.66	-2413	567.36	9809	910.08	1.604	Si
SLV 12	5.66	-279	-569.04	0	0	0	No, e>l/2
SLV 8	3.66	-278	-546.55	0	0	0	No, e>l/2
SLV 8	5.66	-3708	554.1	15071	1332.9	2.406	Si
SLV 13	3.66	-12298	2209.45	49987	2979.82	1.349	Si
SLV 13	5.66	-961	-1745.16	0	0	0	No, e>l/2
SLV 16	3.66	-8886	2051.36	36116	2566.58	1.251	Si
SLV 16	5.66	1201	-1807.1	0	0	0	No, Trazione
SLV 11	3.66	-2413	567.36	9809	910.08	1.604	Si
SLV 11	5.66	-279	-569.04	0	0	0	No, e>l/2
SLV 7	3.66	-278	-546.55	0	0	0	No, e>l/2
SLV 7	5.66	-3708	554.1	15071	1332.9	2.406	Si
SLV 14	3.66	-12298	2209.45	49987	2979.82	1.349	Si
SLV 14	5.66	-961	-1745.16	0	0	0	No, e>l/2
SLV 3	3.66	-1768	-1661.68	0	0	0	No, e>l/2
SLV 3	5.66	-10231	1936.7	41584	2767.41	1.429	Si
SLV 4	3.66	-1768	-1661.68	0	0	0	No, e>l/2
SLV 4	5.66	-10231	1936.7	41584	2767.41	1.429	Si
SLV 15	3.66	-8886	2051.36	36116	2566.58	1.251	Si
SLV 15	5.66	1201	-1807.1	0	0	0	No, Trazione

Verifica a taglio nel piano secondo D.M. 17-01-18 (N.T.C.) §7.8.2.2.2 con rottura per scorrimento in combinazioni non sismiche, γM = 3

Comb.	Quota	N	V par	M	σ0	σN	l'	fvd	Vt scorr.	Vt fess.diag.	Vt,lim	c.s.	Verifica
SLU 34	3.66	-8223	289	321.66		33425	0.8201	10012	2463			8.53	Si
SLU 34	5.66	-6511	206	111.81		26464	0.8201	9084	2235			10.84	Si
SLU 42	3.66	-8478	291	328.35		34459	0.8201	10150	2497			8.58	Si
SLU 42	5.66	-6725	236	112.2		27334	0.8201	9200	2263			9.58	Si
SLU 84	3.66	-10271	330	398.31		41747	0.8201	10833	2665			8.07	Si
SLU 84	5.66	-8164	250	139.88		33185	0.8201	9980	2455			9.83	Si
SLU 75	3.66	-9990	319	389.58		40603	0.8201	10833	2665			8.36	Si
SLU 75	5.66	-7936	229	136.18		32257	0.8201	9856	2425			10.58	Si
SLU 82	3.66	-10161	338	396.91		41301	0.8201	10833	2665			7.88	Si
SLU 82	5.66	-8039	261	133.37		32676	0.8201	9912	2439			9.35	Si
SLU 73	3.66	-9907	336	390.21		40266	0.8201	10833	2665			7.93	Si
SLU 73	5.66	-7825	231	132.98		31805	0.8201	9796	2410			10.45	Si
SLU 40	3.66	-8368	299	326.95		34013	0.8201	10091	2483			8.3	Si
SLU 40	5.66	-6600	247	105.69		26825	0.8201	9132	2247			9.08	Si
SLU 76	3.66	-10016	328	391.62		40712	0.8201	10833	2665			8.13	Si
SLU 76	5.66	-7950	220	139.49		32314	0.8201	9864	2427			11.05	Si
SLU 81	3.66	-10078	314	390.21		40962	0.8201	10833	2665			8.48	Si
SLU 81	5.66	-7998	267	130.53		32508	0.8201	9890	2433			9.11	Si
SLU 31	3.66	-8114	297	320.25		32979	0.8201	9953	2449			8.25	Si
SLU 31	5.66	-6386	217	105.3		25955	0.8201	9016	2218			10.21	Si

Verifica a taglio nel piano secondo D.M. 17-01-18 (N.T.C.) §7.8.2.2.2 con rottura per scorrimento in combinazioni sismiche, γM = 2

Comb.	Quota	N	V par	M	σ0	σN	l'	fvd	Vt scorr.	Vt fess.diag.	Vt,lim	c.s.	Verifica
SLV 8	3.66	-278	-2120	-546.55		0	0	8333	0			0	No, Vu<V
SLV 8	5.66	-3708	-2133	554.1		15809	0.7818	11495	2696			1.26	Si
SLV 11	3.66	-2413	1581	567.36		15327	0.5248	11399	1795			1.14	Si
SLV 11	5.66	-279	934	-569.04		0	0	8333	0			0	No, Vu<V
SLV 7	3.66	-278	-2120	-546.55		0	0	8333	0			0	No, Vu<V
SLV 7	5.66	-3708	-2133	554.1		15809	0.7818	11495	2696			1.26	Si
SLV 14	3.66	-12298	6506	2209.45		59311	0.6912	16250	3369			0.52	No, Vu<V
SLV 14	5.66	-961	5479	-1745.16		0	0	8333	0			0	No, Vu<V
SLV 13	3.66	-12298	6506	2209.45		59311	0.6912	16250	3369			0.52	No, Vu<V

Comb.	Quota	N	V par	M	σ0	σN	l'	fvd	Vt scorr.	Vt fess.diag.	Vt,lim	c.s.	Verifica
SLV 13	5.66	-961	5479	-1745.16		0	0	8333	0			0	No, Vu<V
SLV 15	3.66	-8886	6225	2051.36		55099	0.5376	16250	2621			0.42	No, Vu<V
SLV 15	5.66	1201	5033	-1807.1		0	0	8333	0			0	No, Vu<V
SLV 3	3.66	-1768	-6109	-1661.68		0	0	8333	0			0	No, Vu<V
SLV 3	5.66	-10231	-5192	1936.7		51496	0.6622	16250	3228			0.62	No, Vu<V
SLV 16	3.66	-8886	6225	2051.36		55099	0.5376	16250	2621			0.42	No, Vu<V
SLV 16	5.66	1201	5033	-1807.1		0	0	8333	0			0	No, Vu<V
SLV 4	3.66	-1768	-6109	-1661.68		0	0	8333	0			0	No, Vu<V
SLV 4	5.66	-10231	-5192	1936.7		51496	0.6622	16250	3228			0.62	No, Vu<V
SLV 12	3.66	-2413	1581	567.36		15327	0.5248	11399	1795			1.14	Si
SLV 12	5.66	-279	934	-569.04		0	0	8333	0			0	No, Vu<V

Verifica a pressoflessione fuori piano D.M. 17-01-18 (N.T.C.)

quota 4.41 Wa 0.05 denominatore 8 γM = 2

Comb.	fd	Sa	σ0	N	M	Mc	Coeff.s.	Verifica
SLV 8	143750	0.34	8282	-2038	73.87	284.93	3.86	Si
SLV 7	143750	0.34	8282	-2038	73.87	284.93	3.86	Si
SLV 12	143750	0.34	9098	-2238	73.87	310.75	4.21	Si
SLV 11	143750	0.34	9098	-2238	73.87	310.75	4.21	Si
SLV 3	143750	0.34	20644	-5079	73.87	633.14	8.57	Si
SLV 4	143750	0.34	20644	-5079	73.87	633.14	8.57	Si
SLV 16	143750	0.34	23363	-5748	73.87	697.34	9.44	Si
SLV 15	143750	0.34	23363	-5748	73.87	697.34	9.44	Si
SLV 2	143750	0.34	32056	-7887	73.87	872.64	11.81	Si
SLV 1	143750	0.34	32056	-7887	73.87	872.64	11.81	Si

Verifica dei meccanismi locali di collasso con analisi cinematica lineare

forza di aggancio al piano = 0 quota mezzeria = 4.41 Wa = 0.05 Ta = 0.0643

Comb.	N top	N base	V orto	α0	M*	e*	a0*	aLim	Verifica
SLV 12	-975	252	-11	0	0	0	0	7.77903	No, Trazione
SLV 11	-975	252	-11	0	0	0	0	7.77903	No, Trazione
SLV 2	-7909	-12360	21	0.046	923.1	0.962	0.68877	8.67774	No
SLV 1	-7909	-12360	21	0.046	923.1	0.962	0.68877	8.67774	No
SLV 3	-6255	-9220	17	0.046	754.9	0.954	0.70632	8.67774	No
SLV 4	-6255	-9220	17	0.046	754.9	0.954	0.70632	8.67774	No
SLV 14	-2754	-3422	-18	0.049	400.5	0.922	0.76462	8.67774	No
SLV 13	-2754	-3422	-18	0.049	400.5	0.922	0.76462	8.67774	No
SLV 5	-8035	-12895	11	0.047	935.9	0.962	0.70487	7.77903	No
SLV 6	-8035	-12895	11	0.047	935.9	0.962	0.70487	7.77903	No

Tabella dei coefficienti di sicurezza minimi

Stato limite	Coeff.s.	Comb.	Verifica
PF_SLU	5.155	SLU 84	Si
V_SLU	7.877	SLU 82	Si
PF_SLV	0	SLV 16	No
V_SLV	0	SLV 3	No
PFFP_SLV	3.857	SLV 7	Si
R_SLV	0	SLV 12	No

Maschio 284

Verifiche condotte secondo D.M. 17-01-18 (N.T.C.)

Dati geometrici

X ini.	Y ini.	X fin.	Y fin.	Quota i.	Quota.s	l	Sp.	h netta	h ini.	h fin.	a	a.s.,sx	a.s.,dx
-11.933	-4.784	-11.003	-4.784	Z medio 271 cm	Z medio 611 cm	0.93	0.3	3.4	3.4	3.4			

Caratteristiche del materiale

(Circolare 7 21-01-19 C8.5.I) Muratura in mattoni pieni e malta di calce LC2_Corti

fb	fk	fvk0	fmedio	τ0	fv0	μ	ϕ	fv,lim	E	G	FC
600000			345000	9000	20000	0.58	0.77	32500	320000000	128000000	1.2

Verifica a pressoflessione nel piano secondo D.M. 17-01-18 NTC §7.8.2.2.1 in combinazioni non sismiche, γM = 3

Comb.	Quota	N	M	σ0	Mu	c.s.	Verifica
SLU 81	3.66	-10748	101.78	38524	2634.06	25.879	Si
SLU 81	5.66	-10148	-535.79	36375	2611.61	4.874	Si
SLU 76	3.66	-10723	57.26	38437	2633.43	45.992	Si
SLU 76	5.66	-9993	-517.05	35818	2603.38	5.035	Si
SLU 74	3.66	-10599	88.92	37991	2629.86	29.576	Si
SLU 74	5.66	-9977	-518.85	35761	2602.49	5.016	Si
SLU 77	3.66	-10743	83.6	38506	2633.93	31.505	Si
SLU 77	5.66	-10110	-520.05	36239	2609.69	5.018	Si
SLU 84	3.66	-10979	78.52	39352	2638.78	33.604	Si
SLU 84	5.66	-10307	-537.68	36944	2618.99	4.871	Si
SLU 82	3.66	-10835	83.84	38837	2636.1	31.442	Si
SLU 82	5.66	-10174	-536.48	36467	2612.87	4.87	Si
SLU 73	3.66	-10580	62.57	37922	2629.25	42.018	Si
SLU 73	5.66	-9859	-515.84	35340	2595.55	5.032	Si
SLU 78	3.66	-10830	65.66	38819	2635.99	40.147	Si
SLU 78	5.66	-10136	-520.74	36330	2610.99	5.014	Si
SLU 83	3.66	-10892	96.47	39039	2637.25	27.338	Si
SLU 83	5.66	-10282	-537	36853	2617.87	4.875	Si
SLU 75	3.66	-10686	70.97	38304	2632.43	37.09	Si
SLU 75	5.66	-10003	-519.53	35853	2603.93	5.012	Si

Verifica a pressoflessione nel piano secondo D.M. 17-01-18 NTC §7.8.2.2.1 in combinazioni sismiche, γM = 2

Comb.	Quota	N	M	σ0	Mu	c.s.	Verifica
SLV 12	3.66	-735	1101.4	0	0	0	No, e>l/2
SLV 12	5.66	-4643	-931.33	16643	1864.98	2.002	Si
SLV 3	3.66	-8119	-2353.72	29100	2875.96	1.222	Si
SLV 3	5.66	501	1918.56	0	0	0	No, Trazione
SLV 11	3.66	-735	1101.4	0	0	0	No, e>l/2
SLV 11	5.66	-4643	-931.33	16643	1864.98	2.002	Si
SLV 15	3.66	-3308	2646.48	0	0	0	No, e>l/2
SLV 15	5.66	-12024	-2583.03	43097	3618.83	1.401	Si
SLV 2	3.66	-11767	-2529.42	42179	3582.85	1.416	Si
SLV 2	5.66	-2067	1853.3	0	0	0	No, e>l/2
SLV 4	3.66	-8119	-2353.72	29100	2875.96	1.222	Si
SLV 4	5.66	501	1918.56	0	0	0	No, Trazione
SLV 7	3.66	-2178	-398.67	7807	948.07	2.378	Si
SLV 7	5.66	-886	419.15	0	0	0	No, e>l/2
SLV 8	3.66	-2178	-398.67	7807	948.07	2.378	Si
SLV 8	5.66	-886	419.15	0	0	0	No, e>l/2
SLV 16	3.66	-3308	2646.48	0	0	0	No, e>l/2
SLV 16	5.66	-12024	-2583.03	43097	3618.83	1.401	Si
SLV 1	3.66	-11767	-2529.42	42179	3582.85	1.416	Si
SLV 1	5.66	-2067	1853.3	0	0	0	No, e>l/2

Verifica a taglio nel piano secondo D.M. 17-01-18 (N.T.C.) §7.8.2.2.2 con rottura per scorrimento in combinazioni non sismiche, γM = 3

Comb.	Quota	N	V par	M	σ0	σN	l'	fvd	Vt scorr.	Vt fess.diag.	Vt,lim	c.s.	Verifica
SLU 53	3.66	-9988	779	79.3		35799	0.93	10329	2882			3.7	Si
SLU 53	5.66	-9375	532	-485.81		33602	0.93	10036	2800			5.27	Si
SLU 83	3.66	-10892	859	96.47		39039	0.93	10761	3002			3.49	Si
SLU 83	5.66	-10282	553	-537		36853	0.93	10469	2921			5.28	Si
SLU 81	3.66	-10748	864	101.78		38524	0.93	10692	2983			3.45	Si
SLU 81	5.66	-10148	558	-535.79		36375	0.93	10406	2903			5.2	Si
SLU 74	3.66	-10599	829	88.92		37991	0.93	10621	2963			3.58	Si
SLU 74	5.66	-9977	543	-518.85		35761	0.93	10324	2880			5.3	Si
SLU 82	3.66	-10835	817	83.84		38837	0.93	10734	2995			3.66	Si
SLU 82	5.66	-10174	560	-536.48		36467	0.93	10418	2906			5.19	Si
SLU 84	3.66	-10979	813	78.52		39352	0.93	10803	3014			3.71	Si
SLU 84	5.66	-10307	555	-537.68		36944	0.93	10481	2924			5.27	Si
SLU 77	3.66	-10743	824	83.6		38506	0.93	10690	2982			3.62	Si
SLU 77	5.66	-10110	539	-520.05		36239	0.93	10387	2898			5.38	Si
SLU 79	3.66	-10722	819	81.85		38430	0.93	10680	2979			3.64	Si
SLU 79	5.66	-10083	533	-517.11		36143	0.93	10375	2894			5.43	Si
SLU 60	3.66	-10136	815	92.16		36333	0.93	10400	2901			3.56	Si
SLU 60	5.66	-9546	546	-502.75		34216	0.93	10118	2823			5.17	Si
SLU 62	3.66	-10280	810	86.85		36848	0.93	10469	2921			3.61	Si
SLU 62	5.66	-9679	541	-503.96		34694	0.93	10181	2841			5.25	Si

Verifica a taglio nel piano secondo D.M. 17-01-18 (N.T.C.) §7.8.2.2.2 con rottura per scorrimento in combinazioni sismiche, γM = 2

Comb.	Quota	N	V par	M	σ0	σN	l'	fvd	Vt scorr.	Vt fess.diag.	Vt,lim	c.s.	Verifica
SLV 3	3.66	-8119	-5260	-2353.72		51527	0.5252	16250	2560			0.49	No, Vu<V
SLV 3	5.66	501	-4878	1918.56		0	0	8333	0			0	No, Vu<V
SLV 12	3.66	-735	2849	1101.4		0	0	8333	0			0	No, Vu<V
SLV 12	5.66	-4643	2074	-931.33		19512	0.7932	12236	2912			1.4	Si
SLV 16	3.66	-3308	6713	2646.48		0	0	8333	0			0	No, Vu<V
SLV 16	5.66	-12024	5725	-2583.03		53406	0.7505	16250	3658			0.64	No, Vu<V
SLV 1	3.66	-11767	-5539	-2529.42		52293	0.7501	16250	3657			0.66	No, Vu<V
SLV 1	5.66	-2067	-4931	1853.3		0	0	8333	0			0	No, Vu<V
SLV 4	3.66	-8119	-5260	-2353.72		51527	0.5252	16250	2560			0.49	No, Vu<V
SLV 4	5.66	501	-4878	1918.56		0	0	8333	0			0	No, Vu<V
SLV 15	3.66	-3308	6713	2646.48		0	0	8333	0			0	No, Vu<V
SLV 15	5.66	-12024	5725	-2583.03		53406	0.7505	16250	3658			0.64	No, Vu<V
SLV 2	3.66	-11767	-5539	-2529.42		52293	0.7501	16250	3657			0.66	No, Vu<V
SLV 2	5.66	-2067	-4931	1853.3		0	0	8333	0			0	No, Vu<V
SLV 8	3.66	-2178	-743	-398.67		8584	0.8458	10050	2550			3.43	Si
SLV 8	5.66	-886	-1107	419.15		0	0	8333	0			0	No, Vu<V
SLV 11	3.66	-735	2849	1101.4		0	0	8333	0			0	No, Vu<V
SLV 11	5.66	-4643	2074	-931.33		19512	0.7932	12236	2912			1.4	Si
SLV 7	3.66	-2178	-743	-398.67		8584	0.8458	10050	2550			3.43	Si
SLV 7	5.66	-886	-1107	419.15		0	0	8333	0			0	No, Vu<V

Verifica a pressoflessione fuori piano D.M. 17-01-18 (N.T.C.)

quota 4.41 Wa 0.05 denominatore 8 γM = 2

Comb.	fd	Sa	σ0	N	M	Mc	Coeff.s.	Verifica
SLV 8	143750	0.34	7227	-2016	83.76	284.54	3.4	Si
SLV 7	143750	0.34	7227	-2016	83.76	284.54	3.4	Si
SLV 12	143750	0.34	9332	-2604	83.76	360.71	4.31	Si
SLV 11	143750	0.34	9332	-2604	83.76	360.71	4.31	Si
SLV 4	143750	0.34	18207	-5080	83.76	648.4	7.74	Si
SLV 3	143750	0.34	18207	-5080	83.76	648.4	7.74	Si
SLV 15	143750	0.34	25226	-7038	83.76	837.71	10	Si
SLV 16	143750	0.34	25226	-7038	83.76	837.71	10	Si
SLV 1	143750	0.34	29724	-8293	83.76	941.31	11.24	Si
SLV 2	143750	0.34	29724	-8293	83.76	941.31	11.24	Si

Verifica dei meccanismi locali di collasso con analisi cinematica lineare

forza di aggancio al piano = 0 quota mezzeria = 4.41 Wa = 0.05 Ta = 0.0643

Comb.	N top	N base	V orto	α0	M*	e*	a0*	aLim	Verifica
SLV 8	-1251	10	0	0	0	0	0	7.77903	No, Trazione
SLV 7	-1251	10	0	0	0	0	0	7.77903	No, Trazione
SLV 14	-9755	-14738	-2	0.047	1126.8	0.964	0.71486	8.67774	No
SLV 13	-9755	-14738	-2	0.047	1126.8	0.964	0.71486	8.67774	No

Comb.	N top	N base	V orto	α0	M*	e*	a0*	aLim	Verifica
SLV 16	-7754	-11212	-3	0.048	923.2	0.957	0.73039	8.67774	No
SLV 15	-7754	-11212	-3	0.048	923.2	0.957	0.73039	8.67774	No
SLV 10	-9846	-15024	1	0.048	1136	0.965	0.71697	7.77903	No
SLV 9	-9846	-15024	1	0.048	1136	0.965	0.71697	7.77903	No
SLV 6	-7922	-11744	2	0.048	940.3	0.958	0.73039	7.77903	No
SLV 5	-7922	-11744	2	0.048	940.3	0.958	0.73039	7.77903	No

Tabella dei coefficienti di sicurezza minimi

Stato limite	Coeff.s.	Comb.	Verifica
PF_SLU	4.87	SLU 82	Si
V_SLU	3.452	SLU 81	Si
PF_SLV	0	SLV 4	No
V_SLV	0	SLV 1	No
PFFP_SLV	3.397	SLV 7	Si
R_SLV	0	SLV 8	No

Maschio 285

Verifiche condotte secondo D.M. 17-01-18 (N.T.C.)

Dati geometrici

X ini.	Y ini.	X fin.	Y fin.	Quota i.	Quota.s	l	Sp.	h netta	h ini.	h fin.	a	a.s.,sx	a.s.,dx
-13.753	-4.784	-12.933	-4.784	Z medio 611 cm	Z medio 959 cm	0.82	0.3	3.48	3.48	3.48			

Caratteristiche del materiale

(Circolare 7 21-01-19 C8.5.I) Muratura in mattoni pieni e malta di calce LC2_Corti

fb	fk	fvk0	fmedio	τ0	fv0	μ	ϕ	fv,lim	E	G	FC
600000			345000	9000	20000	0.58	0.77	32500	320000000	128000000	1.2

Verifica a pressoflessione nel piano secondo D.M. 17-01-18 NTC §7.8.2.2.1 in combinazioni non sismiche, γM = 3

Comb.	Quota	N	M	σ0	Mu	c.s.	Verifica
SLU 77	7.06	-6927	311.9	28157	1858.75	5.959	Si
SLU 77	9.06	-5028	127.05	20435	1544.42	12.156	Si
SLU 81	7.06	-6871	313.15	27928	1851.57	5.913	Si
SLU 81	9.06	-4861	113.67	19757	1509.79	13.283	Si
SLU 78	7.06	-6947	311.35	28238	1861.28	5.978	Si
SLU 78	9.06	-5066	131.7	20590	1552.22	11.786	Si
SLU 83	7.06	-6981	315.53	28372	1865.42	5.912	Si
SLU 83	9.06	-5002	121.87	20332	1539.24	12.63	Si
SLU 79	7.06	-6906	309.79	28068	1855.97	5.991	Si
SLU 79	9.06	-5022	128.58	20413	1543.34	12.003	Si
SLU 82	7.06	-6891	312.59	28009	1854.13	5.931	Si
SLU 82	9.06	-4899	118.32	19913	1517.85	12.828	Si
SLU 80	7.06	-6926	309.23	28149	1858.51	6.01	Si
SLU 80	9.06	-5061	133.23	20569	1551.15	11.642	Si
SLU 84	7.06	-7001	314.97	28454	1867.9	5.93	Si
SLU 84	9.06	-5041	126.52	20487	1547.07	12.228	Si
SLU 75	7.06	-6838	308.97	27793	1847.28	5.979	Si
SLU 75	9.06	-4925	123.49	20016	1523.14	12.334	Si
SLU 74	7.06	-6818	309.53	27712	1844.66	5.96	Si
SLU 74	9.06	-4886	118.84	19860	1515.13	12.749	Si

Verifica a pressoflessione nel piano secondo D.M. 17-01-18 NTC §7.8.2.2.1 in combinazioni sismiche, γM = 2

Comb.	Quota	N	M	σ0	Mu	c.s.	Verifica
SLV 15	7.06	-8344	1321.72	33912	2471.76	1.87	Si
SLV 15	9.06	-209	-1102.23	0	0	0	No, e>l/2
SLV 1	7.06	-1358	-878.6	0	0	0	No, e>l/2
SLV 1	9.06	-6695	1270.76	27211	2133.86	1.679	Si
SLV 14	7.06	-9957	1391.57	40468	2730.54	1.962	Si
SLV 14	9.06	-1285	-1008.85	0	0	0	No, e>l/2
SLV 11	7.06	-3452	445.67	14031	1253.03	2.812	Si
SLV 11	9.06	-847	-413.32	0	0	0	No, e>l/2
SLV 13	7.06	-9957	1391.57	40468	2730.54	1.962	Si
SLV 13	9.06	-1285	-1008.85	0	0	0	No, e>l/2
SLV 2	7.06	-1358	-878.6	0	0	0	No, e>l/2
SLV 2	9.06	-6695	1270.76	27211	2133.86	1.679	Si
SLV 3	7.06	255	-948.45	0	0	0	No, Trazione
SLV 3	9.06	-5618	1177.37	22836	1873.28	1.591	Si
SLV 4	7.06	255	-948.45	0	0	0	No, Trazione
SLV 4	9.06	-5618	1177.37	22836	1873.28	1.591	Si
SLV 16	7.06	-8344	1321.72	33912	2471.76	1.87	Si
SLV 16	9.06	-209	-1102.23	0	0	0	No, e>l/2
SLV 12	7.06	-3452	445.67	14031	1253.03	2.812	Si
SLV 12	9.06	-847	-413.32	0	0	0	No, e>l/2

Verifica a taglio nel piano secondo D.M. 17-01-18 (N.T.C.) §7.8.2.2.2 con rottura per scorrimento in combinazioni non sismiche, γM = 3

Comb.	Quota	N	V par	M	σ0	σN	l'	fvd	Vt scorr.	Vt fess.diag.	Vt,lim	c.s.	Verifica
SLU 83	7.06	-6981	506	315.53		28372	0.8201	9339	2298			4.54	Si
SLU 83	9.06	-5002	344	121.87		20332	0.8201	8266	2034			5.92	Si
SLU 81	7.06	-6871	513	313.15		27928	0.8201	9279	2283			4.45	Si
SLU 81	9.06	-4861	359	113.67		19757	0.8201	8190	2015			5.62	Si
SLU 78	7.06	-6947	484	311.35		28238	0.8201	9321	2293			4.74	Si
SLU 78	9.06	-5066	287	131.7		20590	0.8201	8301	2042			7.1	Si
SLU 74	7.06	-6818	486	309.53		27712	0.8201	9250	2276			4.68	Si
SLU 74	9.06	-4886	319	118.84		19860	0.8201	8204	2018			6.32	Si
SLU 75	7.06	-6838	491	308.97		27793	0.8201	9261	2279			4.64	Si

Comb.	Quota	N	V par	M	σ0	σN	l'	fvd	Vt scorr.	Vt fess.diag.	Vt,lim	c.s.	Verifica
SLU 75	9.06	-4925	303	123.49		20016	0.8201	8224	2023			6.69	Si
SLU 40	7.06	-5639	447	255.41		22918	0.8201	8611	2119			4.74	Si
SLU 40	9.06	-3999	312	93.99		16254	0.8201	7723	1900			6.08	Si
SLU 82	7.06	-6891	518	312.59		28009	0.8201	9290	2286			4.41	Si
SLU 82	9.06	-4899	342	118.32		19913	0.8201	8211	2020			5.91	Si
SLU 73	7.06	-6720	495	304.11		27314	0.8201	9197	2263			4.57	Si
SLU 73	9.06	-4803	301	119.93		19523	0.8201	8159	2007			6.67	Si
SLU 84	7.06	-7001	511	314.97		28454	0.8201	9349	2300			4.5	Si
SLU 84	9.06	-5041	327	126.52		20487	0.8201	8287	2039			6.24	Si
SLU 76	7.06	-6829	488	306.48		27758	0.8201	9257	2277			4.67	Si
SLU 76	9.06	-4945	286	128.13		20098	0.8201	8235	2026			7.09	Si

Verifica a taglio nel piano secondo D.M. 17-01-18 (N.T.C.) §7.8.2.2.2 con rottura per scorrimento in combinazioni sismiche, γM = 2

Comb.	Quota	N	V par	M	σ0	σN	l'	fvd	Vt scorr.	Vt fess.diag.	Vt,lim	c.s.	Verifica
SLV 1	7.06	-1358	-3936	-878.6		0	0	8333	0			0	No, Vu<V
SLV 1	9.06	-6695	-2702	1270.76		33775	0.6607	15088	2991			1.11	Si
SLV 13	7.06	-9957	5034	1391.57		40929	0.8109	16250	3953			0.79	No, Vu<V
SLV 13	9.06	-1285	3516	-1008.85		0	0	8333	0			0	No, Vu<V
SLV 12	7.06	-3452	957	445.67		14031	0.8201	11140	2741			2.86	Si
SLV 12	9.06	-847	468	-413.32		0	0	8333	0			0	No, Vu<V
SLV 3	7.06	255	-4369	-948.45		0	0	8333	0			0	No, Vu<V
SLV 3	9.06	-5618	-3105	1177.37		31136	0.6015	14560	2627			0.85	No, Vu<V
SLV 4	7.06	255	-4369	-948.45		0	0	8333	0			0	No, Vu<V
SLV 4	9.06	-5618	-3105	1177.37		31136	0.6015	14560	2627			0.85	No, Vu<V
SLV 16	7.06	-8344	4602	1321.72		36840	0.7549	15701	3556			0.77	No, Vu<V
SLV 16	9.06	-209	3114	-1102.23		0	0	8333	0			0	No, Vu<V
SLV 11	7.06	-3452	957	445.67		14031	0.8201	11140	2741			2.86	Si
SLV 11	9.06	-847	468	-413.32		0	0	8333	0			0	No, Vu<V
SLV 2	7.06	-1358	-3936	-878.6		0	0	8333	0			0	No, Vu<V
SLV 2	9.06	-6695	-2702	1270.76		33775	0.6607	15088	2991			1.11	Si
SLV 14	7.06	-9957	5034	1391.57		40929	0.8109	16250	3953			0.79	No, Vu<V
SLV 14	9.06	-1285	3516	-1008.85		0	0	8333	0			0	No, Vu<V
SLV 15	7.06	-8344	4602	1321.72		36840	0.7549	15701	3556			0.77	No, Vu<V
SLV 15	9.06	-209	3114	-1102.23		0	0	8333	0			0	No, Vu<V

Verifica a pressoflessione fuori piano D.M. 17-01-18 (N.T.C.)

quota 7.85 Wa 0.05 denominatore 8 γM = 2

Comb.	fd	Sa	σ0	N	M	Mc	Coeff.s.	Verifica
SLV 7	143750	0.41	7062	-1738	94.22	245.58	2.61	Si
SLV 8	143750	0.41	7062	-1738	94.22	245.58	2.61	Si
SLV 4	143750	0.41	7382	-1816	94.22	255.96	2.72	Si
SLV 3	143750	0.41	7382	-1816	94.22	255.96	2.72	Si
SLV 12	143750	0.41	12086	-2974	94.22	401.93	4.27	Si
SLV 11	143750	0.41	12086	-2974	94.22	401.93	4.27	Si
SLV 2	143750	0.41	12679	-3119	94.22	419.36	4.45	Si
SLV 1	143750	0.41	12679	-3119	94.22	419.36	4.45	Si
SLV 15	143750	0.41	24128	-5936	94.22	714.61	7.58	Si
SLV 16	143750	0.41	24128	-5936	94.22	714.61	7.58	Si

Verifica dei meccanismi locali di collasso con analisi cinematica lineare

forza di aggancio al piano = 0 quota mezzeria = 7.85 Wa = 0.05 Ta = 0.0674

Comb.	N top	N base	V orto	α0	M*	e*	a0*	aLim	Verifica
SLV 10	-3695	-6141	-37	0.042	498.2	0.933	0.65818	9.47597	No
SLV 9	-3695	-6141	-37	0.042	498.2	0.933	0.65818	9.47597	No
SLV 5	-4374	-6749	-35	0.043	566.9	0.94	0.65952	9.47597	No
SLV 6	-4374	-6749	-35	0.043	566.9	0.94	0.65952	9.47597	No
SLV 1	-4262	-5812	-9	0.048	555.6	0.939	0.74297	10.61727	No
SLV 2	-4262	-5812	-9	0.048	555.6	0.939	0.74297	10.61727	No
SLV 4	-3487	-4401	13	0.048	477.2	0.931	0.74652	10.61727	No
SLV 3	-3487	-4401	13	0.048	477.2	0.931	0.74652	10.61727	No
SLV 7	-1790	-2046	37	0.042	307.2	0.905	0.6706	9.47597	No
SLV 8	-1790	-2046	37	0.042	307.2	0.905	0.6706	9.47597	No

Tabella dei coefficienti di sicurezza minimi

Stato limite	Coeff.s.	Comb.	Verifica
PF_SLU	5.912	SLU 83	Si
V_SLU	4.409	SLU 82	Si
PF_SLV	0	SLV 4	No
V_SLV	0	SLV 1	No
PFFP_SLV	2.606	SLV 7	Si
R_SLV	0.069	SLV 9	No

Maschio 286

Verifiche condotte secondo D.M. 17-01-18 (N.T.C.)

Dati geometrici

X ini.	Y ini.	X fin.	Y fin.	Quota i.	Quota.s	l	Sp.	h netta	h ini.	h fin.	a	a.s.,sx	a.s.,dx
-11.933	-4.784	-11.003	-4.784	Z medio 611 cm	Z medio 959 cm	0.93	0.3	3.48	3.48	3.48			

Caratteristiche del materiale

(Circolare 7 21-01-19 C8.5.I) Muratura in mattoni pieni e malta di calce LC2_Corti

fb	fk	fvk0	fmedio	τ0	fv0	μ	ϕ	fv,lim	E	G	FC
600000			345000	9000	20000	0.58	0.77	32500	320000000	128000000	1.2

Verifica a pressoflessione nel piano secondo D.M. 17-01-18 NTC §7.8.2.2.1 in combinazioni non sismiche, γM = 3

Comb.	Quota	N	M	σ0	Mu	c.s.	Verifica
SLU 76	7.06	-7095	-110.58	25431	2269.03	20.519	Si
SLU 76	9.06	-6402	-433.08	22949	2138.26	4.937	Si
SLU 61	7.06	-6718	-97.01	24081	2200.32	22.682	Si
SLU 61	9.06	-6065	-418.18	21740	2067.48	4.944	Si
SLU 83	7.06	-7217	-96.95	25867	2289.97	23.621	Si
SLU 83	9.06	-6573	-449.78	23561	2172.34	4.83	Si
SLU 81	7.06	-7068	-89.04	25334	2264.27	25.431	Si
SLU 81	9.06	-6431	-446.39	23053	2144.15	4.803	Si
SLU 60	7.06	-6685	-91.63	23960	2193.91	23.944	Si
SLU 60	9.06	-6053	-417.85	21697	2064.91	4.942	Si
SLU 82	7.06	-7101	-94.42	25454	2270.15	24.044	Si
SLU 82	9.06	-6443	-446.72	23095	2146.53	4.805	Si
SLU 75	7.06	-7085	-105.86	25397	2267.34	21.419	Si
SLU 75	9.06	-6412	-435.08	22984	2140.25	4.919	Si
SLU 74	7.06	-7052	-100.48	25276	2261.43	22.506	Si
SLU 74	9.06	-6400	-434.74	22942	2137.85	4.917	Si
SLU 84	7.06	-7250	-102.33	25988	2295.65	22.435	Si
SLU 84	9.06	-6585	-450.11	23604	2174.66	4.831	Si
SLU 73	7.06	-6946	-102.67	24898	2242.59	21.843	Si
SLU 73	9.06	-6261	-429.7	22441	2109.08	4.908	Si

Verifica a pressoflessione nel piano secondo D.M. 17-01-18 NTC §7.8.2.2.1 in combinazioni sismiche, γM = 2

Comb.	Quota	N	M	σ0	Mu	c.s.	Verifica
SLV 16	7.06	-488	1222.8	0	0	0	No, e>l/2
SLV 16	9.06	-7389	-1683.86	26486	2691.06	1.598	Si
SLV 12	7.06	-891	399.02	3194	403.46	1.011	Si
SLV 12	9.06	-3636	-586.8	13031	1510.14	2.574	Si
SLV 3	7.06	-7719	-1321.45	27667	2776.31	2.101	Si
SLV 3	9.06	-473	1161.75	0	0	0	No, e>l/2
SLV 15	7.06	-488	1222.8	0	0	0	No, e>l/2
SLV 15	9.06	-7389	-1683.86	26486	2691.06	1.598	Si
SLV 11	7.06	-891	399.02	3194	403.46	1.011	Si
SLV 11	9.06	-3636	-586.8	13031	1510.14	2.574	Si
SLV 13	7.06	-2312	1165.62	0	0	0	No, e>l/2
SLV 13	9.06	-8532	-1770.51	30582	2974.23	1.68	Si
SLV 1	7.06	-9543	-1378.64	34205	3194.97	2.317	Si
SLV 1	9.06	-1616	1075.1	0	0	0	No, e>l/2
SLV 2	7.06	-9543	-1378.64	34205	3194.97	2.317	Si
SLV 2	9.06	-1616	1075.1	0	0	0	No, e>l/2
SLV 4	7.06	-7719	-1321.45	27667	2776.31	2.101	Si
SLV 4	9.06	-473	1161.75	0	0	0	No, e>l/2
SLV 14	7.06	-2312	1165.62	0	0	0	No, e>l/2
SLV 14	9.06	-8532	-1770.51	30582	2974.23	1.68	Si

Verifica a taglio nel piano secondo D.M. 17-01-18 (N.T.C.) §7.8.2.2.2 con rottura per scorrimento in combinazioni non sismiche, γM = 3

Comb.	Quota	N	V par	M	σ0	σN	l'	fvd	Vt scorr.	Vt fess.diag.	Vt,lim	c.s.	Verifica
SLU 52	7.06	-6563	281	-105.26		23524	0.9299	8692	2425			8.63	Si
SLU 52	9.06	-5882	474	-401.16		21085	0.9299	8367	2334			4.93	Si
SLU 63	7.06	-6867	300	-104.92		24614	0.9299	8837	2466			8.21	Si
SLU 63	9.06	-6207	480	-421.57		22248	0.9299	8522	2377			4.95	Si
SLU 73	7.06	-6946	299	-102.67		24898	0.9299	8875	2476			8.27	Si
SLU 73	9.06	-6261	482	-429.7		22441	0.9299	8548	2385			4.94	Si
SLU 84	7.06	-7250	319	-102.33		25988	0.9299	9021	2517			7.9	Si
SLU 84	9.06	-6585	489	-450.11		23604	0.9299	8703	2428			4.97	Si
SLU 55	7.06	-6712	271	-113.17		24058	0.9299	8763	2445			9.02	Si
SLU 55	9.06	-6024	472	-404.54		21593	0.9299	8435	2353			4.98	Si
SLU 82	7.06	-7101	329	-94.42		25454	0.9299	8949	2497			7.6	Si
SLU 82	9.06	-6443	490	-446.72		23095	0.9299	8635	2409			4.91	Si
SLU 61	7.06	-6718	310	-97.01		24081	0.9299	8766	2446			7.88	Si
SLU 61	9.06	-6065	481	-418.18		21740	0.9299	8454	2359			4.9	Si
SLU 60	7.06	-6685	329	-91.63		23960	0.9299	8750	2441			7.42	Si
SLU 60	9.06	-6053	476	-417.85		21697	0.9299	8449	2357			4.95	Si
SLU 54	7.06	-6702	288	-108.45		24023	0.9299	8759	2444			8.49	Si
SLU 54	9.06	-6034	473	-406.53		21628	0.9299	8439	2354			4.97	Si
SLU 81	7.06	-7068	348	-89.04		25334	0.9299	8933	2492			7.17	Si
SLU 81	9.06	-6431	485	-446.39		23053	0.9299	8629	2407			4.97	Si

Verifica a taglio nel piano secondo D.M. 17-01-18 (N.T.C.) §7.8.2.2.2 con rottura per scorrimento in combinazioni sismiche, γM = 2

Comb.	Quota	N	V par	M	σ0	σN	l'	fvd	Vt scorr.	Vt fess.diag.	Vt,lim	c.s.	Verifica
SLV 3	7.06	-7719	-4478	-1321.45		29194	0.8813	14172	3747			0.84	No, Vu<V
SLV 3	9.06	-473	-3045	1161.75		0	0	8333	0			0	No, Vu<V
SLV 16	7.06	-488	5332	1222.8		0	0	8333	0			0	No, Vu<V
SLV 16	9.06	-7389	3712	-1683.86		34629	0.7113	15259	3256			0.88	No, Vu<V
SLV 11	7.06	-891	2354	399.02		57783	0.0514	16250	251			0.11	No, Vu<V
SLV 11	9.06	-3636	1310	-586.8		13307	0.9107	10995	3004			2.29	Si
SLV 14	7.06	-2312	4942	1165.62		0	0	8333	0			0	No, Vu<V
SLV 14	9.06	-8532	3743	-1770.51		36821	0.7724	15698	3637			0.97	No, Vu<V
SLV 2	7.06	-9543	-4869	-1378.64		34205	0.9299	15174	4233			0.87	No, Vu<V
SLV 2	9.06	-1616	-3014	1075.1		0	0	8333	0			0	No, Vu<V
SLV 13	7.06	-2312	4942	1165.62		0	0	8333	0			0	No, Vu<V
SLV 13	9.06	-8532	3743	-1770.51		36821	0.7724	15698	3637			0.97	No, Vu<V
SLV 12	7.06	-891	2354	399.02		57783	0.0514	16250	251			0.11	No, Vu<V
SLV 12	9.06	-3636	1310	-586.8		13307	0.9107	10995	3004			2.29	Si
SLV 15	7.06	-488	5332	1222.8		0	0	8333	0			0	No, Vu<V
SLV 15	9.06	-7389	3712	-1683.86		34629	0.7113	15259	3256			0.88	No, Vu<V
SLV 1	7.06	-9543	-4869	-1378.64		34205	0.9299	15174	4233			0.87	No, Vu<V
SLV 1	9.06	-1616	-3014	1075.1		0	0	8333	0			0	No, Vu<V
SLV 4	7.06	-7719	-4478	-1321.45		29194	0.8813	14172	3747			0.84	No, Vu<V
SLV 4	9.06	-473	-3045	1161.75		0	0	8333	0			0	No, Vu<V

Verifica a pressoflessione fuori piano D.M. 17-01-18 (N.T.C.)

quota 7.85 Wa 0.05 denominatore 8 γM = 2

Comb.	fd	Sa	σ0	N	M	Mc	Coeff.s.	Verifica
SLV 11	143750	0.41	7411	-2068	106.84	291.33	2.73	Si
SLV 12	143750	0.41	7411	-2068	106.84	291.33	2.73	Si
SLV 8	143750	0.41	9946	-2775	106.84	382.34	3.58	Si
SLV 7	143750	0.41	9946	-2775	106.84	382.34	3.58	Si
SLV 15	143750	0.41	10780	-3007	106.84	411.32	3.85	Si
SLV 16	143750	0.41	10780	-3007	106.84	411.32	3.85	Si
SLV 14	143750	0.41	16202	-4520	106.84	588.12	5.5	Si
SLV 13	143750	0.41	16202	-4520	106.84	588.12	5.5	Si
SLV 3	143750	0.41	19230	-5365	106.84	678.07	6.35	Si
SLV 4	143750	0.41	19230	-5365	106.84	678.07	6.35	Si

Verifica dei meccanismi locali di collasso con analisi cinematica lineare

forza di aggancio al piano = 0 quota mezzeria = 7.85 Wa = 0.05 Ta = 0.0674

Comb.	N top	N base	V orto	α0	M*	e*	a0*	aLim	Verifica
SLV 14	-5727	-7097	-12	0.047	720.6	0.946	0.72112	10.61727	No
SLV 13	-5727	-7097	-12	0.047	720.6	0.946	0.72112	10.61727	No
SLV 10	-5422	-8124	-43	0.042	689.6	0.944	0.65084	9.47597	No
SLV 9	-5422	-8124	-43	0.042	689.6	0.944	0.65084	9.47597	No
SLV 15	-4879	-5395	14	0.047	634.6	0.939	0.7316	10.61727	No
SLV 16	-4879	-5395	14	0.047	634.6	0.939	0.7316	10.61727	No
SLV 6	-4312	-7301	-43	0.042	577.3	0.935	0.65382	9.47597	No
SLV 5	-4312	-7301	-43	0.042	577.3	0.935	0.65382	9.47597	No
SLV 11	-2595	-2448	44	0.041	404.5	0.914	0.65775	9.47597	No
SLV 12	-2595	-2448	44	0.041	404.5	0.914	0.65775	9.47597	No

Tabella dei coefficienti di sicurezza minimi

Stato limite	Coeff.s.	Comb.	Verifica
PF_SLU	4.803	SLU 81	Si
V_SLU	4.899	SLU 61	Si
PF_SLV	0	SLV 1	No
V_SLV	0	SLV 1	No
PFFP_SLV	2.727	SLV 11	Si
R_SLV	0.068	SLV 13	No

Maschio 287

Verifiche condotte secondo D.M. 17-01-18 (N.T.C.)

Dati geometrici

X ini.	Y ini.	X fin.	Y fin.	Quota i.	Quota.s	l	Sp.	h netta	h ini.	h fin.	a	a.s.,sx	a.s.,dx
-11.013	-4.725	-14.033	-4.725	L1	L2	3.021	0.45	2.03	2.03	2.03			

Caratteristiche del materiale

(Circolare 7 21-01-19 C8.5.I) Muratura in mattoni pieni e malta di calce LC2_Corti

fb	fk	fvk0	fmedio	τ0	fv0	μ	ϕ	fv,lim	E	G	FC
600000			345000	9000	20000	0.58	0.77	32500	320000000	128000000	1.2

Verifica a pressoflessione nel piano secondo D.M. 17-01-18 NTC §7.8.2.2.1 in combinazioni non sismiche, γM = 3

Comb.	Quota	N	M	σ0	Mu	c.s.	Verifica
SLU 81	-2.03	-45757	685.08	33662	40551.63	59.193	Si
SLU 81	0	-31677	3270.95	23303	34156.99	10.443	Si
SLU 77	-2.03	-45151	645.52	33216	40387.79	62.566	Si
SLU 77	0	-31153	3217.85	22918	33814.44	10.508	Si
SLU 74	-2.03	-44778	650.35	32941	40282	61.939	Si
SLU 74	0	-30859	3209.08	22701	33619.29	10.476	Si
SLU 83	-2.03	-46130	680.25	33936	40647.46	59.753	Si
SLU 83	0	-31971	3279.72	23519	34345.59	10.472	Si
SLU 64	-2.03	-40903	566.34	30090	38957.9	68.788	Si
SLU 64	0	-27725	2979.77	20396	31389.97	10.534	Si
SLU 66	-2.03	-41380	567.23	30442	39143.14	69.007	Si
SLU 66	0	-28092	3005.25	20666	31665.38	10.537	Si
SLU 75	-2.03	-44852	652.31	32995	40303.04	61.785	Si
SLU 75	0	-31019	3190.85	22819	33725.66	10.569	Si
SLU 79	-2.03	-45047	639.81	33139	40358.5	63.079	Si
SLU 79	0	-31079	3201.13	22863	33765.48	10.548	Si
SLU 84	-2.03	-46203	682.22	33990	40665.81	59.608	Si
SLU 84	0	-32130	3261.48	23637	34447.13	10.562	Si
SLU 82	-2.03	-45830	687.04	33715	40570.72	59.051	Si
SLU 82	0	-31837	3252.72	23421	34259.8	10.533	Si

Verifica a pressoflessione nel piano secondo D.M. 17-01-18 NTC §7.8.2.2.1 in combinazioni sismiche, γM = 2

Comb.	Quota	N	M	σ0	Mu	c.s.	Verifica
SLV 16	-2.03	-23559	629.61	17331	30535.62	48.499	Si
SLV 16	0	-14779	9143.65	10872	20335.96	2.224	Si
SLV 11	-2.03	-4953	-492.41	3644	7257.92	14.74	Si
SLV 11	0	-2502	3359.34	1841	3721.91	1.108	Si
SLV 12	-2.03	-4953	-492.41	3644	7257.92	14.74	Si
SLV 12	0	-2502	3359.34	1841	3721.91	1.108	Si
SLV 13	-2.03	-39676	1286.24	29188	45610.45	35.46	Si
SLV 13	0	-26068	9803.5	19177	33193.12	3.386	Si
SLV 15	-2.03	-23559	629.61	17331	30535.62	48.499	Si
SLV 15	0	-14779	9143.65	10872	20335.96	2.224	Si
SLV 8	-2.03	-5122	-797.51	3768	7497.6	9.401	Si
SLV 8	0	-3267	-938.79	2404	4837.78	5.153	Si

Comb.	Quota	N	M	σ0	Mu	c.s.	Verifica
SLV 7	-2.03	-5122	-797.51	3768	7497.6	9.401	Si
SLV 7	0	-3267	-938.79	2404	4837.78	5.153	Si
SLV 4	-2.03	-24122	-387.39	17745	31141.99	80.39	Si
SLV 4	0	-17331	-5183.45	12749	23444.41	4.523	Si
SLV 3	-2.03	-24122	-387.39	17745	31141.99	80.39	Si
SLV 3	0	-17331	-5183.45	12749	23444.41	4.523	Si
SLV 14	-2.03	-39676	1286.24	29188	45610.45	35.46	Si
SLV 14	0	-26068	9803.5	19177	33193.12	3.386	Si

Verifica a taglio nel piano secondo D.M. 17-01-18 (N.T.C.) §7.8.2.2.2 con rottura per scorrimento in combinazioni non sismiche, γM = 3

Comb.	Quota	N	V par	M	σ0	σN	l'	fvd	Vt scorr.	Vt fess.diag.	Vt,lim	c.s.	Verifica
SLU 82	-2.03	-45830	594	687.04		33715	3.0207	10051	13663			22.98	Si
SLU 82	0	-31837	2127	3252.72		23421	3.0207	8678	11797			5.55	Si
SLU 77	-2.03	-45151	607	645.52		33216	3.0207	9984	13572			22.37	Si
SLU 77	0	-31153	2097	3217.85		22918	3.0207	8611	11706			5.58	Si
SLU 75	-2.03	-44852	600	652.31		32995	3.0207	9955	13532			22.55	Si
SLU 75	0	-31019	2101	3190.85		22819	3.0207	8598	11688			5.56	Si
SLU 79	-2.03	-45047	611	639.81		33139	3.0207	9974	13558			22.21	Si
SLU 79	0	-31079	2096	3201.13		22863	3.0207	8604	11696			5.58	Si
SLU 84	-2.03	-46203	613	682.22		33990	3.0207	10088	13712			22.36	Si
SLU 84	0	-32130	2158	3261.48		23637	3.0207	8707	11836			5.49	Si
SLU 76	-2.03	-44796	612	647.9		32954	3.0207	9949	13525			22.1	Si
SLU 76	0	-31051	2122	3161.98		22843	3.0207	8601	11692			5.51	Si
SLU 78	-2.03	-45224	619	647.48		33269	3.0207	9991	13582			21.95	Si
SLU 78	0	-31312	2131	3199.62		23035	3.0207	8627	11727			5.5	Si
SLU 83	-2.03	-46130	601	680.25		33936	3.0207	10080	13703			22.8	Si
SLU 83	0	-31971	2123	3279.72		23519	3.0207	8691	11815			5.56	Si
SLU 73	-2.03	-44423	593	652.73		32680	3.0207	9913	13475			22.71	Si
SLU 73	0	-30757	2092	3153.21		22627	3.0207	8572	11653			5.57	Si
SLU 80	-2.03	-45120	623	641.77		33193	3.0207	9981	13568			21.79	Si
SLU 80	0	-31238	2130	3182.9		22981	3.0207	8620	11717			5.5	Si

Verifica a taglio nel piano secondo D.M. 17-01-18 (N.T.C.) §7.8.2.2.2 con rottura per scorrimento in combinazioni sismiche, γM = 2

Comb.	Quota	N	V par	M	σ0	σN	l'	fvd	Vt scorr.	Vt fess.diag.	Vt,lim	c.s.	Verifica
SLV 7	-2.03	-5122	2003	-797.51		3768	3.0207	9087	12352			6.17	Si
SLV 7	0	-3267	2855	-938.79		2404	3.0207	8814	11981			4.2	Si
SLV 8	-2.03	-5122	2003	-797.51		3768	3.0207	9087	12352			6.17	Si
SLV 8	0	-3267	2855	-938.79		2404	3.0207	8814	11981			4.2	Si
SLV 1	-2.03	-40239	8240	269.24		29602	3.0207	14254	19376			2.35	Si
SLV 1	0	-28619	6672	-4523.6		21054	3.0207	12544	17052			2.56	Si
SLV 13	-2.03	-39676	-6966	1286.24		29188	3.0207	14171	19263			2.77	Si
SLV 13	0	-26068	-3625	9803.5		19177	3.0207	12169	16541			4.56	Si
SLV 4	-2.03	-24122	7818	-387.39		17745	3.0207	11882	16152			2.07	Si
SLV 4	0	-17331	6573	-5183.45		12749	3.0207	10883	14794			2.25	Si
SLV 16	-2.03	-23559	-7388	629.61		17331	3.0207	11800	16040			2.17	Si
SLV 16	0	-14779	-3723	9143.65		12277	2.6751	10789	12987			3.49	Si
SLV 2	-2.03	-40239	8240	269.24		29602	3.0207	14254	19376			2.35	Si
SLV 2	0	-28619	6672	-4523.6		21054	3.0207	12544	17052			2.56	Si
SLV 3	-2.03	-24122	7818	-387.39		17745	3.0207	11882	16152			2.07	Si
SLV 3	0	-17331	6573	-5183.45		12749	3.0207	10883	14794			2.25	Si
SLV 14	-2.03	-39676	-6966	1286.24		29188	3.0207	14171	19263			2.77	Si
SLV 14	0	-26068	-3625	9803.5		19177	3.0207	12169	16541			4.56	Si
SLV 15	-2.03	-23559	-7388	629.61		17331	3.0207	11800	16040			2.17	Si
SLV 15	0	-14779	-3723	9143.65		12277	2.6751	10789	12987			3.49	Si

Verifica a pressoflessione fuori piano D.M. 17-01-18 (N.T.C.)

quota -1.015 Wa 0.08 denominatore 8 γM = 2

Comb.	fd	Sa	σ0	N	M	Mc	Coeff.s.	Verifica
SLV 12	143750	0.24	2839	-3859	102.64	848.18	8.26	Si
SLV 11	143750	0.24	2839	-3859	102.64	848.18	8.26	Si
SLV 7	143750	0.24	3021	-4107	102.64	901.25	8.78	Si
SLV 8	143750	0.24	3021	-4107	102.64	901.25	8.78	Si
SLV 16	143750	0.24	14208	-19314	102.64	3840.31	37.41	Si
SLV 15	143750	0.24	14208	-19314	102.64	3840.31	37.41	Si
SLV 3	143750	0.24	14816	-20140	102.64	3981.97	38.79	Si
SLV 4	143750	0.24	14816	-20140	102.64	3981.97	38.79	Si
SLV 14	143750	0.24	24136	-32808	102.64	5923.75	57.71	Si
SLV 13	143750	0.24	24136	-32808	102.64	5923.75	57.71	Si

Verifica dei meccanismi locali di collasso con analisi cinematica lineare

forza di aggancio al piano = 0 quota mezzeria = -1.015 Wa = 0.08 Ta = 0.0153

Comb.	N top	N base	V orto	α0	M*	e*	a0*	aLim	Verifica
SLV 10	-40131	-58676	-1565	0.081	4474.4	0.973	1.20318	2.76337	No
SLV 9	-40131	-58676	-1565	0.081	4474.4	0.973	1.20318	2.76337	No
SLV 6	-40897	-58845	-1574	0.081	4552.4	0.974	1.20761	2.76337	No
SLV 5	-40897	-58845	-1574	0.081	4552.4	0.974	1.20761	2.76337	No
SLV 14	-26068	-39676	-1072	0.083	3042.8	0.962	1.25305	2.82638	No
SLV 13	-26068	-39676	-1072	0.083	3042.8	0.962	1.25305	2.82638	No
SLV 1	-28619	-40239	-1101	0.084	3302.4	0.965	1.26984	2.82638	No
SLV 2	-28619	-40239	-1101	0.084	3302.4	0.965	1.26984	2.82638	No
SLV 16	-14779	-23559	-659	0.089	1896.1	0.942	1.3674	2.82638	No
SLV 15	-14779	-23559	-659	0.089	1896.1	0.942	1.3674	2.82638	No

Tabella dei coefficienti di sicurezza minimi

Stato limite	Coeff.s.	Comb.	Verifica
PF_SLU	10.443	SLU 81	Si
V_SLU	5.485	SLU 84	Si
PF_SLV	1.108	SLV 11	Si
V_SLV	2.066	SLV 3	Si

Stato limite	Coeff.s.	Comb.	Verifica
PFFP_SLV	8.263	SLV 11	Si
R_SLV	0.435	SLV 9	No

Maschio 288

Verifiche condotte secondo D.M. 17-01-18 (N.T.C.)

Dati geometrici

X ini.	Y ini.	X fin.	Y fin.	Quota i.	Quota.s	l	Sp.	h netta	h ini.	h fin.	a	a.s.,sx	a.s.,dx
-13.753	-4.784	-12.933	-4.784	Z medio 959 cm	F1	0.82	0.3	4.327	4.328	4.327			

Caratteristiche del materiale

(Circolare 7 21-01-19 C8.5.I) Muratura in mattoni pieni e malta di calce LC2_Corti

fb	fk	fvk0	fmedio	τ0	fv0	μ	ϕ	fv,lim	E	G	FC
600000			345000	9000	20000	0.58	0.77	32500	320000000	128000000	1.2

Verifica a pressoflessione nel piano secondo D.M. 17-01-18 NTC §7.8.2.2.1 in combinazioni non sismiche, γM = 3

Comb.	Quota	N	M	σ0	Mu	c.s.	Verifica
SLU 84	10.54	-3772	207.59	15331	1255.63	6.049	Si
SLU 84	12.54	-1671	-47.39	6792	628.07	13.253	Si
SLU 81	10.54	-3631	203.54	14758	1219.18	5.99	Si
SLU 81	12.54	-1528	-53.07	6209	578.67	10.905	Si
SLU 73	10.54	-3577	198.85	14537	1204.89	6.059	Si
SLU 73	12.54	-1536	-44.8	6244	581.66	12.983	Si
SLU 61	10.54	-3430	191.68	13940	1165.69	6.082	Si
SLU 61	12.54	-1455	-43.58	5916	553.47	12.701	Si
SLU 74	10.54	-3713	205.66	15093	1240.56	6.032	Si
SLU 74	12.54	-1653	-46.09	6720	622.06	13.497	Si
SLU 83	10.54	-3765	208.08	15304	1253.88	6.026	Si
SLU 83	12.54	-1661	-49.32	6752	624.72	12.667	Si
SLU 60	10.54	-3423	192.17	13912	1163.85	6.056	Si
SLU 60	12.54	-1446	-45.51	5876	550.04	12.087	Si
SLU 77	10.54	-3848	210.21	15638	1274.82	6.065	Si
SLU 77	12.54	-1787	-42.34	7263	667.43	15.762	Si
SLU 82	10.54	-3638	203.04	14786	1220.96	6.013	Si
SLU 82	12.54	-1537	-51.14	6249	582.07	11.383	Si
SLU 75	10.54	-3720	205.16	15121	1242.33	6.055	Si
SLU 75	12.54	-1663	-44.16	6760	625.41	14.163	Si

Verifica a pressoflessione nel piano secondo D.M. 17-01-18 NTC §7.8.2.2.1 in combinazioni sismiche, γM = 2

Comb.	Quota	N	M	σ0	Mu	c.s.	Verifica
SLV 16	10.54	-4042	418.6	16427	1434.45	3.427	Si
SLV 16	12.54	-396	-243.93	0	0	0	No, e>l/2
SLV 4	10.54	-250	-215.34	0	0	0	No, e>l/2
SLV 4	12.54	-2164	355.53	8797	823.64	2.317	Si
SLV 15	10.54	-4042	418.6	16427	1434.45	3.427	Si
SLV 15	12.54	-396	-243.93	0	0	0	No, e>l/2
SLV 9	10.54	-4781	392.2	19433	1648.73	4.204	Si
SLV 9	12.54	-419	-404.11	0	0	0	No, e>l/2
SLV 10	10.54	-4781	392.2	19433	1648.73	4.204	Si
SLV 10	12.54	-419	-404.11	0	0	0	No, e>l/2
SLV 3	10.54	-250	-215.34	0	0	0	No, e>l/2
SLV 3	12.54	-2164	355.53	8797	823.64	2.317	Si
SLV 5	10.54	-3644	202.01	14809	1312.99	6.499	Si
SLV 5	12.54	-949	-224.27	3858	376.92	1.681	Si
SLV 6	10.54	-3644	202.01	14809	1312.99	6.499	Si
SLV 6	12.54	-949	-224.27	3858	376.92	1.681	Si
SLV 14	10.54	-4995	508.82	20304	1708.02	3.357	Si
SLV 14	12.54	-121	-414.7	0	0	0	No, e>l/2
SLV 13	10.54	-4995	508.82	20304	1708.02	3.357	Si
SLV 13	12.54	-121	-414.7	0	0	0	No, e>l/2

Verifica a taglio nel piano secondo D.M. 17-01-18 (N.T.C.) §7.8.2.2.2 con rottura per scorrimento in combinazioni non sismiche, γM = 3

Comb.	Quota	N	V par	M	σ0	σN	l'	fvd	Vt scorr.	Vt fess.diag.	Vt,lim	c.s.	Verifica
SLU 76	10.54	-3711	595	203.4		15083	0.8201	7567	1862			3.13	Si
SLU 76	12.54	-1670	385	-41.06		6787	0.8201	6460	1589			4.13	Si
SLU 75	10.54	-3720	586	205.16		15121	0.8201	7572	1863			3.18	Si
SLU 75	12.54	-1663	398	-44.16		6760	0.8201	6457	1589			3.99	Si
SLU 78	10.54	-3854	590	209.71		15666	0.8201	7644	1881			3.19	Si
SLU 78	12.54	-1797	389	-40.41		7303	0.8201	6529	1606			4.13	Si
SLU 73	10.54	-3577	590	198.85		14537	0.8201	7494	1844			3.12	Si
SLU 73	12.54	-1536	393	-44.8		6244	0.8201	6388	1572			4	Si
SLU 80	10.54	-3840	587	208.28		15609	0.8201	7637	1879			3.2	Si
SLU 80	12.54	-1797	382	-38.6		7303	0.8201	6529	1606			4.21	Si
SLU 83	10.54	-3765	591	208.08		15304	0.8201	7596	1869			3.16	Si
SLU 83	12.54	-1661	432	-49.32		6752	0.8201	6456	1588			3.67	Si
SLU 84	10.54	-3772	609	207.59		15331	0.8201	7600	1870			3.07	Si
SLU 84	12.54	-1671	425	-47.39		6792	0.8201	6461	1590			3.74	Si
SLU 82	10.54	-3638	604	203.04		14786	0.8201	7527	1852			3.06	Si
SLU 82	12.54	-1537	433	-51.14		6249	0.8201	6389	1572			3.63	Si
SLU 74	10.54	-3713	568	205.66		15093	0.8201	7568	1862			3.28	Si
SLU 74	12.54	-1653	406	-46.09		6720	0.8201	6452	1587			3.91	Si
SLU 81	10.54	-3631	586	203.54		14758	0.8201	7523	1851			3.16	Si
SLU 81	12.54	-1528	441	-53.07		6209	0.8201	6383	1571			3.56	Si

Verifica a taglio nel piano secondo D.M. 17-01-18 (N.T.C.) §7.8.2.2.2 con rottura per scorrimento in combinazioni sismiche, γM = 2

Comb.	Quota	N	V par	M	σ0	σN	I'	fvd	Vt scorr.	Vt fess.diag.	Vt,lim	c.s.	Verifica
SLV 1	10.54	-1204	-1664	-125.12		4892	0.8201	9312	2291			1.38	Si
SLV 1	12.54	-1889	-640	184.76		7679	0.8201	9869	2428			3.79	Si
SLV 13	10.54	-4995	2369	508.82		20304	0.8201	12394	3049			1.29	Si
SLV 13	12.54	-121	1601	-414.7		0	0	8333	0			0	No, Vu<V
SLV 2	10.54	-1204	-1664	-125.12		4892	0.8201	9312	2291			1.38	Si
SLV 2	12.54	-1889	-640	184.76		7679	0.8201	9869	2428			3.79	Si
SLV 4	10.54	-250	-1590	-215.34		0	0	8333	0			0	No, Vu<V
SLV 4	12.54	-2164	-1082	355.53		9784	0.7374	10290	2276			2.1	Si
SLV 16	10.54	-4042	2443	418.6		16427	0.8201	11619	2859			1.17	Si
SLV 16	12.54	-396	1159	-243.93		0	0	8333	0			0	No, Vu<V
SLV 15	10.54	-4042	2443	418.6		16427	0.8201	11619	2859			1.17	Si
SLV 15	12.54	-396	1159	-243.93		0	0	8333	0			0	No, Vu<V
SLV 3	10.54	-250	-1590	-215.34		0	0	8333	0			0	No, Vu<V
SLV 3	12.54	-2164	-1082	355.53		9784	0.7374	10290	2276			2.1	Si
SLV 10	10.54	-4781	870	392.2		19433	0.8201	12220	3007			3.46	Si
SLV 10	12.54	-419	1333	-404.11		0	0	8333	0			0	No, Vu<V
SLV 14	10.54	-4995	2369	508.82		20304	0.8201	12394	3049			1.29	Si
SLV 14	12.54	-121	1601	-414.7		0	0	8333	0			0	No, Vu<V
SLV 9	10.54	-4781	870	392.2		19433	0.8201	12220	3007			3.46	Si
SLV 9	12.54	-419	1333	-404.11		0	0	8333	0			0	No, Vu<V

Verifica a pressoflessione fuori piano D.M. 17-01-18 (N.T.C.)

quota 11.754 Wa 0.05 denominatore 8 γM = 2

Comb.	fd	Sa	σ0	N	M	Mc	Coeff.s.	Verifica
SLV 8	143750	0.5	4914	-1209	175.22	174.07	0.99	No, M>Mu
SLV 7	143750	0.5	4914	-1209	175.22	174.07	0.99	No, M>Mu
SLV 12	143750	0.5	5065	-1246	175.22	179.18	1.02	Si
SLV 11	143750	0.5	5065	-1246	175.22	179.18	1.02	Si
SLV 4	143750	0.5	6661	-1639	175.22	232.44	1.33	Si
SLV 3	143750	0.5	6661	-1639	175.22	232.44	1.33	Si
SLV 16	143750	0.5	7163	-1762	175.22	248.87	1.42	Si
SLV 15	143750	0.5	7163	-1762	175.22	248.87	1.42	Si
SLV 1	143750	0.5	8310	-2044	175.22	285.81	1.63	Si
SLV 2	143750	0.5	8310	-2044	175.22	285.81	1.63	Si

Verifica dei meccanismi locali di collasso con analisi cinematica lineare

forza di aggancio al piano = 0 quota mezzeria = 11.754 Wa = 0.05 Ta = 0.1042

Comb.	N top	N base	V orto	α0	M*	e*	a0*	aLim	Verifica
SLV 14	1215	-2870	-28	0	0	0	0	19.76633	No, Trazione
SLV 15	1529	-2280	-53	0	0	0	0	19.76633	No, Trazione
SLV 11	768	-1438	-54	0	0	0	0	18.24404	No, Trazione
SLV 12	768	-1438	-54	0	0	0	0	18.24404	No, Trazione
SLV 16	1529	-2280	-53	0	0	0	0	19.76633	No, Trazione
SLV 13	1215	-2870	-28	0	0	0	0	19.76633	No, Trazione
SLV 5	-1245	-3275	52	0.026	287	0.891	0.42876	18.24404	No
SLV 6	-1245	-3275	52	0.026	287	0.891	0.42876	18.24404	No
SLV 1	-2006	-2434	50	0.029	360.4	0.901	0.46723	19.76633	No
SLV 2	-2006	-2434	50	0.029	360.4	0.901	0.46723	19.76633	No

Tabella dei coefficienti di sicurezza minimi

Stato limite	Coeff.s.	Comb.	Verifica
PF_SLU	5.99	SLU 81	Si
V_SLU	3.064	SLU 82	Si
PF_SLV	0	SLV 3	No
V_SLV	0	SLV 3	No
PFFP_SLV	0.993	SLV 7	No
R_SLV	0	SLV 16	No

Maschio 289

Verifiche condotte secondo D.M. 17-01-18 (N.T.C.)

Dati geometrici

X ini.	Y ini.	X fin.	Y fin.	Quota i.	Quota.s	l	Sp.	h netta	h ini.	h fin.	a	a.s.,sx	a.s.,dx
-11.933	-4.784	-11.003	-4.784	Z medio 959 cm	F1	0.93	0.3	4.326	4.326	4.325			

Caratteristiche del materiale

(Circolare 7 21-01-19 C8.5.I) Muratura in mattoni pieni e malta di calce LC2_Corti

fb	fk	fvk0	fmedio	τ0	fv0	μ	ϕ	fv,lim	E	G	FC
600000			345000	9000	20000	0.58	0.77	32500	320000000	128000000	1.2

Verifica a pressoflessione nel piano secondo D.M. 17-01-18 NTC §7.8.2.2.1 in combinazioni non sismiche, γM = 3

Comb.	Quota	N	M	σ0	Mu	c.s.	Verifica
SLU 73	10.54	-3311	22.79	11868	1315.2	57.712	Si
SLU 73	12.54	-2526	-247.21	9053	1043.8	4.222	Si
SLU 60	10.54	-3156	32.66	11311	1263.56	38.689	Si
SLU 60	12.54	-2442	-245.1	8753	1013.47	4.135	Si
SLU 83	10.54	-3488	32.68	12504	1373.03	42.009	Si
SLU 83	12.54	-2742	-264.03	9827	1120.95	4.246	Si
SLU 18	10.54	-2507	34.45	8987	1037.16	30.104	Si
SLU 18	12.54	-1964	-199.39	7041	834.46	4.185	Si
SLU 81	10.54	-3331	41.51	11939	1321.72	31.845	Si
SLU 81	12.54	-2608	-261.54	9348	1073.45	4.104	Si
SLU 19	10.54	-2521	28.68	9038	1042.34	36.343	Si

Comb.	Quota	N	M	σ0	Mu	c.s.	Verifica
SLU 19	12.54	-1948	-195.87	6982	828.11	4.228	Si
SLU 61	10.54	-3170	26.89	11363	1268.36	47.173	Si
SLU 61	12.54	-2426	-241.58	8694	1007.44	4.17	Si
SLU 39	10.54	-2682	43.3	9614	1099.97	25.405	Si
SLU 39	12.54	-2130	-215.83	7636	897.68	4.159	Si
SLU 40	10.54	-2697	37.53	9665	1105.04	29.447	Si
SLU 40	12.54	-2114	-212.31	7577	891.45	4.199	Si
SLU 82	10.54	-3345	35.73	11990	1326.42	37.12	Si
SLU 82	12.54	-2591	-258.02	9289	1067.54	4.137	Si

Verifica a pressoflessione nel piano secondo D.M. 17-01-18 NTC §7.8.2.2.1 in combinazioni sismiche, γM = 2

Comb.	Quota	N	M	σ0	Mu	c.s.	Verifica
SLV 15	10.54	-656	360.99	0	0	0	No, e>l/2
SLV 15	12.54	-2326	-456.51	8338	1007.83	2.208	Si
SLV 7	10.54	-1444	-63.88	5176	643.01	10.065	Si
SLV 7	12.54	356	307.26	0	0	0	No, Trazione
SLV 16	10.54	-656	360.99	0	0	0	No, e>l/2
SLV 16	12.54	-2326	-456.51	8338	1007.83	2.208	Si
SLV 8	10.54	-1444	-63.88	5176	643.01	10.065	Si
SLV 8	12.54	356	307.26	0	0	0	No, Trazione
SLV 4	10.54	-3382	-320.2	12124	1416.68	4.424	Si
SLV 4	12.54	-258	317.13	0	0	0	No, e>l/2
SLV 13	10.54	-1499	345.65	5374	666.47	1.928	Si
SLV 13	12.54	-3473	-680.14	12449	1450.31	2.132	Si
SLV 12	10.54	-626	140.47	2244	285.77	2.034	Si
SLV 12	12.54	-265	75.17	948	122.06	1.624	Si
SLV 14	10.54	-1499	345.65	5374	666.47	1.928	Si
SLV 14	12.54	-3473	-680.14	12449	1450.31	2.132	Si
SLV 11	10.54	-626	140.47	2244	285.77	2.034	Si
SLV 11	12.54	-265	75.17	948	122.06	1.624	Si
SLV 3	10.54	-3382	-320.2	12124	1416.68	4.424	Si
SLV 3	12.54	-258	317.13	0	0	0	No, e>l/2

Verifica a taglio nel piano secondo D.M. 17-01-18 (N.T.C.) §7.8.2.2.2 con rottura per scorrimento in combinazioni non sismiche, γM = 3

Comb.	Quota	N	V par	M	σ0	σN	l'	fvd	Vt scorr.	Vt fess.diag.	Vt,lim	c.s.	Verifica
SLU 60	10.54	-3156	220	32.66		11311	0.9299	7064	1971			8.95	Si
SLU 60	12.54	-2442	362	-245.1		8753	0.9299	6723	1876			5.18	Si
SLU 51	10.54	-3340	104	-21.07		11971	0.9299	7152	1995			19.2	Si
SLU 51	12.54	-2510	364	-218.34		8996	0.9299	6755	1885			5.17	Si
SLU 56	10.54	-3434	175	7.41		12309	0.9299	7197	2008			11.45	Si
SLU 56	12.54	-2666	368	-242.73		9555	0.9299	6830	1905			5.17	Si
SLU 48	10.54	-3332	144	-13.82		11944	0.9299	7148	1994			13.82	Si
SLU 48	12.54	-2538	367	-222.98		9096	0.9299	6768	1888			5.15	Si
SLU 62	10.54	-3313	201	23.84		11876	0.9299	7139	1992			9.91	Si
SLU 62	12.54	-2576	366	-247.59		9232	0.9299	6787	1893			5.18	Si
SLU 45	10.54	-3175	163	-5		11379	0.9299	7073	1973			12.07	Si
SLU 45	12.54	-2404	363	-220.49		8617	0.9299	6704	1870			5.15	Si
SLU 50	10.54	-3326	138	-15.3		11920	0.9299	7145	1993			14.48	Si
SLU 50	12.54	-2526	367	-221.86		9055	0.9299	6763	1887			5.13	Si
SLU 53	10.54	-3276	194	16.23		11744	0.9299	7121	1987			10.22	Si
SLU 53	12.54	-2532	365	-240.24		9076	0.9299	6766	1888			5.18	Si
SLU 58	10.54	-3427	169	5.92		12285	0.9299	7194	2007			11.9	Si
SLU 58	12.54	-2654	369	-241.62		9514	0.9299	6824	1904			5.16	Si
SLU 43	10.54	-3010	176	2.34		10790	0.9299	6994	1951			11.09	Si
SLU 43	12.54	-2259	360	-216.88		8098	0.9299	6635	1851			5.14	Si

Verifica a taglio nel piano secondo D.M. 17-01-18 (N.T.C.) §7.8.2.2.2 con rottura per scorrimento in combinazioni sismiche, γM = 2

Comb.	Quota	N	V par	M	σ0	σN	l'	fvd	Vt scorr.	Vt fess.diag.	Vt,lim	c.s.	Verifica
SLV 9	10.54	-3438	1816	89.33		12322	0.9299	10798	3012			1.66	Si
SLV 9	12.54	-4087	1664	-670.28		15088	0.9029	11351	3075			1.85	Si
SLV 3	10.54	-3382	-2132	-320.2		12124	0.9299	10758	3001			1.41	Si
SLV 3	12.54	-258	-1047	317.13		0	0	8333	0			0	No, Vu<V
SLV 13	10.54	-1499	2433	345.65		7106	0.7033	9755	2058			0.85	No, Vu<V
SLV 13	12.54	-3473	1599	-680.14		14338	0.8074	11201	2713			1.7	Si
SLV 14	10.54	-1499	2433	345.65		7106	0.7033	9755	2058			0.85	No, Vu<V
SLV 14	12.54	-3473	1599	-680.14		14338	0.8074	11201	2713			1.7	Si
SLV 7	10.54	-1444	-1515	-63.88		5176	0.9299	9369	2614			1.73	Si
SLV 7	12.54	356	-1112	307.26		0	0	8333	0			0	No, Vu<V
SLV 10	10.54	-3438	1816	89.33		12322	0.9299	10798	3012			1.66	Si
SLV 10	12.54	-4087	1664	-670.28		15088	0.9029	11351	3075			1.85	Si
SLV 15	10.54	-656	1786	360.99		0	0	8333	0			0	No, Vu<V
SLV 15	12.54	-2326	945	-456.51		9618	0.8062	10257	2481			2.62	Si
SLV 8	10.54	-1444	-1515	-63.88		5176	0.9299	9369	2614			1.73	Si
SLV 8	12.54	356	-1112	307.26		0	0	8333	0			0	No, Vu<V
SLV 16	10.54	-656	1786	360.99		0	0	8333	0			0	No, Vu<V
SLV 16	12.54	-2326	945	-456.51		9618	0.8062	10257	2481			2.62	Si
SLV 4	10.54	-3382	-2132	-320.2		12124	0.9299	10758	3001			1.41	Si
SLV 4	12.54	-258	-1047	317.13		0	0	8333	0			0	No, Vu<V

Verifica a pressoflessione fuori piano D.M. 17-01-18 (N.T.C.)

quota 11.753 Wa 0.05 denominatore 8 γM = 2

Comb.	fd	Sa	σ0	N	M	Mc	Coeff.s.	Verifica
SLV 11	143750	0.5	0	-1011	198.54	0	0	No, e>t/2
SLV 12	143750	0.5	0	-1011	198.54	0	0	No, e>t/2
SLV 7	143750	0.5	0	-791	198.54	0	0	No, e>t/2
SLV 8	143750	0.5	0	-791	198.54	0	0	No, e>t/2
SLV 3	143750	0.5	5203	-1451	198.54	208.45	1.05	Si
SLV 4	143750	0.5	5203	-1451	198.54	208.45	1.05	Si
SLV 16	143750	0.5	7824	-2183	198.54	306.44	1.54	Si
SLV 15	143750	0.5	7824	-2183	198.54	306.44	1.54	Si

Comb.	fd	Sa	σ0	N	M	Mc	Coeff.s.	Verifica
SLV 2	143750	0.5	8017	-2237	198.54	313.47	1.58	Si
SLV 1	143750	0.5	8017	-2237	198.54	313.47	1.58	Si

Verifica dei meccanismi locali di collasso con analisi cinematica lineare

forza di aggancio al piano = 0 quota mezzeria = 11.753 Wa = 0.05 Ta = 0.1042

Comb.	N top	N base	V orto	α0	M*	e*	a0*	aLim	Verifica
SLV 2	1104	-2340	-26	0	0	0	0	19.75819	No, Trazione
SLV 1	1104	-2340	-26	0	0	0	0	19.75819	No, Trazione
SLV 4	1589	-1677	-50	0	0	0	0	19.75819	No, Trazione
SLV 3	1589	-1677	-50	0	0	0	0	19.75819	No, Trazione
SLV 8	976	-1474	-52	0	0	0	0	18.23081	No, Trazione
SLV 7	976	-1474	-52	0	0	0	0	18.23081	No, Trazione
SLV 14	-2260	-3969	48	0.031	407.2	0.901	0.50772	19.75819	No
SLV 13	-2260	-3969	48	0.031	407.2	0.901	0.50772	19.75819	No
SLV 10	-1648	-4172	51	0.03	347.8	0.893	0.48569	18.23081	No
SLV 9	-1648	-4172	51	0.03	347.8	0.893	0.48569	18.23081	No

Tabella dei coefficienti di sicurezza minimi

Stato limite	Coeff.s.	Comb.	Verifica
PF_SLU	4.104	SLU 81	Si
V_SLU	5.135	SLU 50	Si
PF_SLV	0	SLV 8	No
V_SLV	0	SLV 3	No
PFFP_SLV	0	SLV 7	No
R_SLV	0	SLV 8	No

Maschio 290

Verifiche condotte secondo D.M. 17-01-18 (N.T.C.)

Dati geometrici

X ini.	Y ini.	X fin.	Y fin.	Quota i.	Quota.s	l	Sp.	h netta	h ini.	h fin.	a	a.s.,sx	a.s.,dx
-7.723	-4.589	-7.723	-4.634	L5	F1	0.045	0.3	6.099	6.111	6.088			

Caratteristiche del materiale

(Circolare 7 21-01-19 C8.5.I) Muratura in mattoni pieni e malta di calce LC2_Corti

fb	fk	fvk0	fmedio	τ0	fv0	μ	ϕ	fv,lim	E	G	FC
600000			345000	9000	20000	0.58	0.77	32500	320000000	128000000	1.2

Verifica a pressoflessione nel piano secondo D.M. 17-01-18 NTC §7.8.2.2.1 in combinazioni non sismiche, γM = 3

Comb.	Quota	N	M	σ0	Mu	c.s.	Verifica
SLU 47	11.45	18	18.71	0	0	0	No, Trazione
SLU 47	13.42	-99	-1.55	7343	2.03	1.311	Si
SLU 42	11.45	-51	12.77	0	0	0	No, e>l/2
SLU 42	13.42	-78	-1.19	5802	1.64	1.381	Si
SLU 40	11.45	-26	12.78	0	0	0	No, e>l/2
SLU 40	13.42	-73	-1.1	5400	1.53	1.389	Si
SLU 51	11.45	-152	10.71	0	0	0	No, e>l/2
SLU 51	13.42	-85	-1.32	6269	1.76	1.334	Si
SLU 46	11.45	-120	11.02	0	0	0	No, e>l/2
SLU 46	13.42	-79	-1.23	5885	1.66	1.345	Si
SLU 36	11.45	-71	12.81	0	0	0	No, e>l/2
SLU 36	13.42	-83	-1.26	6142	1.73	1.373	Si
SLU 38	11.45	-77	12.51	0	0	0	No, e>l/2
SLU 38	13.42	-83	-1.26	6124	1.72	1.367	Si
SLU 44	11.45	43	18.71	0	0	0	No, Trazione
SLU 44	13.42	-94	-1.46	6940	1.93	1.317	Si
SLU 34	11.45	92	20.51	0	0	0	No, Trazione
SLU 34	13.42	-97	-1.49	7198	1.99	1.34	Si
SLU 49	11.45	-145	11.02	0	0	0	No, e>l/2
SLU 49	13.42	-85	-1.32	6288	1.76	1.339	Si

Verifica a pressoflessione nel piano secondo D.M. 17-01-18 NTC §7.8.2.2.1 in combinazioni sismiche, γM = 2

Comb.	Quota	N	M	σ0	Mu	c.s.	Verifica
SLV 7	11.45	4328	261.06	0	0	0	No, Trazione
SLV 7	13.42	-810	-13.4	59977	9.28	0.692	No, M>Mu
SLV 9	11.45	-4816	-261.9	0	0	0	No, e>l/2
SLV 9	13.42	736	12.27	0	0	0	No, Trazione
SLV 10	11.45	-4816	-261.9	0	0	0	No, e>l/2
SLV 10	13.42	736	12.27	0	0	0	No, Trazione
SLV 4	11.45	670	80.11	0	0	0	No, Trazione
SLV 4	13.42	-376	0.27	27883	6.54	23.941	Si
SLV 5	11.45	-5118	-260.52	0	0	0	No, e>l/2
SLV 5	13.42	665	15.36	0	0	0	No, Trazione
SLV 8	11.45	4328	261.06	0	0	0	No, Trazione
SLV 8	13.42	-810	-13.4	59977	9.28	0.692	No, M>Mu
SLV 6	11.45	-5118	-260.52	0	0	0	No, e>l/2
SLV 6	13.42	665	15.36	0	0	0	No, Trazione
SLV 2	11.45	-2164	-76.36	0	0	0	No, e>l/2
SLV 2	13.42	66	8.9	0	0	0	No, Trazione
SLV 3	11.45	670	80.11	0	0	0	No, Trazione
SLV 3	13.42	-376	0.27	27883	6.54	23.941	Si
SLV 1	11.45	-2164	-76.36	0	0	0	No, e>l/2
SLV 1	13.42	66	8.9	0	0	0	No, Trazione

Verifica a taglio nel piano secondo D.M. 17-01-18 (N.T.C.) §7.8.2.2.2 con rottura per scorrimento in combinazioni non sismiche, γM = 3

Comb.	Quota	N	V par	M	σ0	σN	I'	fvd	Vt scorr.	Vt fess.diag.	Vt,lim	c.s.	Verifica
SLU 36	11.45	-71	50	12.81		0	0	5556	0			0	No, Vu<V
SLU 36	13.42	-83	6	-1.26		12542	0.022	7228	48			7.69	Si
SLU 38	11.45	-77	49	12.51		0	0	5556	0			0	No, Vu<V
SLU 38	13.42	-83	7	-1.26		12615	0.0218	7238	47			6.68	Si
SLU 51	11.45	-152	42	10.71		0	0	5556	0			0	No, Vu<V
SLU 51	13.42	-85	15	-1.32		13569	0.0208	7365	46			3.06	Si
SLU 34	11.45	92	80	20.51		0	0	5556	0			0	No, Vu<V
SLU 34	13.42	-97	-2	-1.49		15022	0.0216	7558	49			20.76	Si
SLU 49	11.45	-145	43	11.02		0	0	5556	0			0	No, Vu<V
SLU 49	13.42	-85	14	-1.32		13485	0.021	7354	46			3.28	Si
SLU 46	11.45	-120	43	11.02		0	0	5556	0			0	No, Vu<V
SLU 46	13.42	-79	13	-1.23		12647	0.0209	7242	45			3.64	Si
SLU 42	11.45	-51	50	12.77		0	0	5556	0			0	No, Vu<V
SLU 42	13.42	-78	5	-1.19		11818	0.0221	7131	47			9.63	Si
SLU 47	11.45	18	73	18.71		0	0	5556	0			0	No, Vu<V
SLU 47	13.42	-99	6	-1.55		15988	0.0207	7687	48			8.62	Si
SLU 44	11.45	43	73	18.71		0	0	5556	0			0	No, Vu<V
SLU 44	13.42	-94	4	-1.46		15151	0.0206	7576	47			11.88	Si
SLU 40	11.45	-26	50	12.78		0	0	5556	0			0	No, Vu<V
SLU 40	13.42	-73	3	-1.1		10980	0.0221	7020	47			14.02	Si

Verifica a taglio nel piano secondo D.M. 17-01-18 (N.T.C.) §7.8.2.2.2 con rottura per scorrimento in combinazioni sismiche, γM = 2

Comb.	Quota	N	V par	M	σ0	σN	I'	fvd	Vt scorr.	Vt fess.diag.	Vt,lim	c.s.	Verifica
SLV 10	11.45	-4816	-998	-261.9		0	0	8333	0			0	No, Vu<V
SLV 10	13.42	736	271	12.27		0	0	8333	0			0	No, Vu<V
SLV 5	11.45	-5118	-998	-260.52		0	0	8333	0			0	No, Vu<V
SLV 5	13.42	665	279	15.36		0	0	8333	0			0	No, Vu<V
SLV 6	11.45	-5118	-998	-260.52		0	0	8333	0			0	No, Vu<V
SLV 6	13.42	665	279	15.36		0	0	8333	0			0	No, Vu<V
SLV 9	11.45	-4816	-998	-261.9		0	0	8333	0			0	No, Vu<V
SLV 9	13.42	736	271	12.27		0	0	8333	0			0	No, Vu<V
SLV 2	11.45	-2164	-300	-76.36		0	0	8333	0			0	No, Vu<V
SLV 2	13.42	66	107	8.9		0	0	8333	0			0	No, Vu<V
SLV 8	11.45	4328	996	261.06		0	0	8333	0			0	No, Vu<V
SLV 8	13.42	-810	-237	-13.4		151089	0.0179	16250	87			0.37	No, Vu<V
SLV 1	11.45	-2164	-300	-76.36		0	0	8333	0			0	No, Vu<V
SLV 1	13.42	66	107	8.9		0	0	8333	0			0	No, Vu<V
SLV 4	11.45	670	298	80.11		0	0	8333	0			0	No, Vu<V
SLV 4	13.42	-376	-47	0.27		27883	0.045	13910	188			3.96	Si
SLV 7	11.45	4328	996	261.06		0	0	8333	0			0	No, Vu<V
SLV 7	13.42	-810	-237	-13.4		151089	0.0179	16250	87			0.37	No, Vu<V
SLV 3	11.45	670	298	80.11		0	0	8333	0			0	No, Vu<V
SLV 3	13.42	-376	-47	0.27		27883	0.045	13910	188			3.96	Si

Verifica a pressoflessione fuori piano D.M. 17-01-18 (N.T.C.)

quota 10.944 Wa 0.05 denominatore 8 γM = 2

Comb.	fd	Sa	σ0	N	M	Mc	Coeff.s.	Verifica
SLV 15	143750	0.48	0	3	18.03	0	0	No, Trazione
SLV 7	143750	0.48	0	150	18.03	0	0	No, Trazione
SLV 12	143750	0.48	0	175	18.03	0	0	No, Trazione
SLV 11	143750	0.48	0	175	18.03	0	0	No, Trazione
SLV 3	143750	0.48	0	-81	18.03	0	0	No, e>t/2
SLV 16	143750	0.48	0	3	18.03	0	0	No, Trazione
SLV 4	143750	0.48	0	-81	18.03	0	0	No, e>t/2
SLV 8	143750	0.48	0	150	18.03	0	0	No, Trazione
SLV 14	143750	0.48	12617	-170	18.03	22.91	1.27	Si
SLV 13	143750	0.48	12617	-170	18.03	22.91	1.27	Si

Verifica dei meccanismi locali di collasso con analisi cinematica lineare

forza di aggancio al piano = 0 quota mezzeria = 10.944 Wa = 0.05 Ta = 0.2071

Comb.	N top	N base	V orto	α0	M*	e*	a0*	aLim	Verifica
SLV 10	173	-349	-1	0	0	0	0	19.64891	No, Trazione
SLV 4	-83	41	10	0	0	0	0	19.4569	No, Trazione
SLV 13	59	-570	-10	0	0	0	0	19.4569	No, Trazione
SLV 14	59	-570	-10	0	0	0	0	19.4569	No, Trazione
SLV 5	163	-164	6	0	0	0	0	19.64891	No, Trazione
SLV 3	-83	41	10	0	0	0	0	19.4569	No, Trazione
SLV 2	25	46	12	0	0	0	0	19.4569	No, Trazione
SLV 6	163	-164	6	0	0	0	0	19.64891	No, Trazione
SLV 9	173	-349	-1	0	0	0	0	19.64891	No, Trazione
SLV 1	25	46	12	0	0	0	0	19.4569	No, Trazione

Tabella dei coefficienti di sicurezza minimi

Stato limite	Coeff.s.	Comb.	Verifica
PF_SLU	0	SLU 76	No
V_SLU	0	SLU 2	No
PF_SLV	0	SLV 16	No
V_SLV	0	SLV 1	No
PFFP_SLV	0	SLV 16	No
R_SLV	0	SLV 14	No

2.4 Verifiche travi di accoppiamento in muratura

Le unità di misura elencate nel capitolo sono in [m, daN] ove non espressamente specificato.

X ini.: coordinata punto iniziale. [m]
Y ini.: coordinata punto iniziale. [m]
Z ini.inf.: coordinata punto iniziale. [m]
Z ini.sup.: coordinata punto iniziale. [m]
H ini.: altezza della sezione iniziale. [m]
X fin.: coordinata punto finale. [m]
Y fin.: coordinata punto finale. [m]
Z fin.inf.: coordinata punto finale. [m]
Z fin.sup: coordinata punto finale. [m]
H fin.: altezza della sezione finale. [m]
Luce: lunghezza della trave. [m]
Spessore: spessore. [m]
R. Trazione: resistenza a trazione dell'elemento teso disposto orizzontalmente. [daN]
fb_: resistenza normalizzata a compressione in direzione orizzontale dei blocchi. [daN/m²]
fhk: resistenza caratteristica a compressione della muratura utilizzata in direzione orizzontale. [daN/m²]
fvk0: resistenza caratteristica a taglio in assenza di carichi verticali. [daN/m²]
fhmedio: resistenza media a compressione della muratura utilizzata in direzione orizzontale. [daN/m²]
τ0: resistenza media a taglio in assenza di azioni normali [C8.7.1.16]. [daN/m²]
fv0: resistenza media a taglio in assenza di azioni normali [C8.7.1.17]. [daN/m²]
μ: coefficiente di attrito [C8.7.1.17].
φ: coefficiente di ammorsamento o ingranamento secondo Circolare 7 21-01-19 §C8.7.1.3.1.1.
fvk,lim: valore caratteristico massimo della resistenza a taglio che può essere impiegata nel calcolo (§11.10.3.3). [daN/m²]
E: modulo di elasticità longitudinale della muratura utilizzato. [daN/m²]
G: modulo di elasticità tangenziale della muratura utilizzato. [daN/m²]
FC: fattore di confidenza della muratura.
Sezione: sezione di verifica.
γM: fattore parziale di sicurezza del materiale.
N: sforzo normale. [daN]
*M: momento flettente nel piano. [daN*m]*
*Mu: momento ultimo. [daN*m]*
Comb.: combinazione.
c.s.: coefficiente di sicurezza.
Verifica: stato di verifica.
*M: momento flettente. [daN*m]*
V: taglio nel piano. [daN]
Vt: resistenza a taglio secondo [7.8.4]. [daN]
Vp: resistenza a taglio secondo [7.8.6]. [daN]
Vt fess. diag.: resistenza a taglio per fessurazione diagonale secondo §C8.7.1.3.1.1 formule [C8.7.1.16] ovvero [C8.7.1.17]. [daN]
Vt,lim: taglio limite [C8.1.7.18]. [daN]
Stato limite: pF_SLV=Presso flessione per azioni sismiche; V_SLV=Taglio per azioni sismiche.
Coeff.s.: coefficiente di sicurezza.

Trave di accoppiamento 1

Verifiche condotte secondo D.M. 17-01-18 (N.T.C.)

Dati geometrici

X ini.	Y ini.	Z ini.inf.	Z ini.sup.	H ini.	X fin.	Y fin.	Z fin.inf.	Z fin.sup	H fin.	Luce	Spessore	R. Trazione
-21.883	5.771	-2.03	-0.03	2	-22.883	5.771	-2.03	-0.03	2	1	0.45	30000

Caratteristiche del materiale

(Circolare 7 21-01-19 C8.5.I) Muratura in mattoni pieni e malta di calce LC2_Corti

fb_	fhk	fvk0	fhmedio	τ0	fv0	μ	φ	fvk,lim	E	G	FC
120000			172500	9000	20000	0.577	0.767	6500	320000000	128000000	1.2

Verifiche a pressoflessione delle travi in muratura in combinazioni non sismiche

Sezione	γM	N	M	Mu	Comb.	c.s.	Verifica
ini.	3	-4546	-577.16	9132.35	SLU 83	15.82	Si
fin.	3	-3231	-2045.24	9132.35	SLU 83	4.47	Si
ini.	3	-4410	-631.44	9132.35	SLU 82	14.46	Si
fin.	3	-3175	-1966.18	9132.35	SLU 82	4.64	Si
ini.	3	-4381	-565.09	9132.35	SLU 75	16.16	Si
fin.	3	-3107	-1968.98	9132.35	SLU 75	4.64	Si
ini.	3	-4413	-564.61	9132.35	SLU 74	16.17	Si
fin.	3	-3154	-1978.88	9132.35	SLU 74	4.61	Si
ini.	3	-4459	-502.44	9132.35	SLU 80	18.18	Si
fin.	3	-3092	-2032.92	9132.35	SLU 80	4.49	Si
ini.	3	-4443	-630.95	9132.35	SLU 81	14.47	Si
fin.	3	-3221	-1976.08	9132.35	SLU 81	4.62	Si
ini.	3	-4484	-511.29	9132.35	SLU 78	17.86	Si

Sezione	yM	N	M	Mu	Comb.	c.s.	Verifica
fin.	3	-3117	-2038.14	9132.35	SLU 78	4.48	Si
ini.	3	-4492	-501.96	9132.35	SLU 79	18.19	Si
fin.	3	-3138	-2042.82	9132.35	SLU 79	4.47	Si
ini.	3	-4514	-577.64	9132.35	SLU 84	15.81	Si
fin.	3	-3185	-2035.34	9132.35	SLU 84	4.49	Si
ini.	3	-4516	-510.81	9132.35	SLU 77	17.88	Si
fin.	3	-3164	-2048.04	9132.35	SLU 77	4.46	Si

Verifiche a taglio delle travi in muratura secondo §C8.7.1.3.1 in combinazioni non sismiche

Sezione	yM	N	M	V	Vt	Vp	Vt fess. diag.	Vt,lim	Comb.	c.s.	Verifica
ini.	3	-4492	-501.96	-7503			5263	2061	SLU 79	0.27	No
fin.	3	-3138	-2042.82	5748			4721	1866	SLU 79	0.32	No
ini.	3	-4484	-511.29	-7504			5259	2060	SLU 78	0.27	No
fin.	3	-3117	-2038.14	5740			4713	1863	SLU 78	0.32	No
ini.	3	-4546	-577.16	-7532			5284	2069	SLU 83	0.27	No
fin.	3	-3231	-2045.24	6071			4758	1880	SLU 83	0.31	No
ini.	3	-4516	-510.81	-7529			5272	2065	SLU 77	0.27	No
fin.	3	-3164	-2048.04	5800			4731	1870	SLU 77	0.32	No
ini.	3	-4514	-577.64	-7508			5271	2064	SLU 84	0.27	No
fin.	3	-3185	-2035.34	6011			4740	1873	SLU 84	0.31	No
ini.	3	-4443	-630.95	-7244			5243	2055	SLU 81	0.28	No
fin.	3	-3221	-1976.08	6151			4754	1878	SLU 81	0.31	No
ini.	3	-4459	-502.44	-7479			5250	2057	SLU 80	0.28	No
fin.	3	-3092	-2032.92	5687			4703	1859	SLU 80	0.33	No
ini.	3	-4413	-564.61	-7241			5231	2050	SLU 74	0.28	No
fin.	3	-3154	-1978.88	5880			4727	1868	SLU 74	0.32	No
ini.	3	-4381	-565.09	-7217			5218	2046	SLU 75	0.28	No
fin.	3	-3107	-1968.98	5820			4709	1861	SLU 75	0.32	No
ini.	3	-4410	-631.44	-7220			5230	2050	SLU 82	0.28	No
fin.	3	-3175	-1966.18	6091			4736	1871	SLU 82	0.31	No

Verifiche a pressoflessione delle travi in muratura in combinazioni sismiche

Sezione	yM	N	M	Mu	Comb.	c.s.	Verifica
ini.	2	2138	-5002.31	13698.53	SLV 14	2.74	Si
fin.	2	-4051	1740.13	13698.53	SLV 14	7.87	Si
ini.	2	-285	-100.24	13698.53	SLV 5	136.65	Si
fin.	2	3491	-3034.99	13698.53	SLV 5	4.51	Si
ini.	2	-8209	4123.67	13698.53	SLV 4	3.32	Si
fin.	2	-413	-4431.9	13698.53	SLV 4	3.09	Si
ini.	2	2138	-5002.31	13698.53	SLV 13	2.74	Si
fin.	2	-4051	1740.13	13698.53	SLV 13	7.87	Si
ini.	2	-5841	3556.8	13698.53	SLV 2	3.85	Si
fin.	2	2437	-4852.07	13698.53	SLV 2	2.82	Si
ini.	2	-230	-4435.43	13698.53	SLV 15	3.09	Si
fin.	2	-6901	2160.29	13698.53	SLV 15	6.34	Si
ini.	2	-5841	3556.8	13698.53	SLV 1	3.85	Si
fin.	2	2437	-4852.07	13698.53	SLV 1	2.82	Si
ini.	2	-285	-100.24	13698.53	SLV 6	136.65	Si
fin.	2	3491	-3034.99	13698.53	SLV 6	4.51	Si
ini.	2	-8209	4123.67	13698.53	SLV 3	3.32	Si
fin.	2	-413	-4431.9	13698.53	SLV 3	3.09	Si
ini.	2	-230	-4435.43	13698.53	SLV 16	3.09	Si
fin.	2	-6901	2160.29	13698.53	SLV 16	6.34	Si

Verifiche a taglio delle travi in muratura secondo §C8.7.1.3.1 in combinazioni sismiche

Sezione	yM	N	M	V	Vt	Vp	Vt fess. diag.	Vt,lim	Comb.	c.s.	Verifica
ini.	2	-8180	1789.34	-12517			8471	3284	SLV 8	0.26	No
fin.	2	-6009	-1634.45	3963			7602	2990	SLV 8	0.75	No
ini.	2	-8209	4123.67	-21272			8483	3288	SLV 3	0.15	No
fin.	2	-413	-4431.9	-6258			5364	2044	SLV 3	0.33	No
ini.	2	-8209	4123.67	-21272			8483	3288	SLV 4	0.15	No
fin.	2	-413	-4431.9	-6258			5364	2044	SLV 4	0.33	No
ini.	2	-230	-4435.43	9837			5291	2006	SLV 15	0.2	No
fin.	2	-6901	2160.29	16516			7959	3114	SLV 15	0.19	No
ini.	2	-8180	1789.34	-12517			8471	3284	SLV 7	0.26	No
fin.	2	-6009	-1634.45	3963			7602	2990	SLV 7	0.75	No
ini.	2	-230	-4435.43	9837			5291	2006	SLV 16	0.2	No
fin.	2	-6901	2160.29	16516			7959	3114	SLV 16	0.19	No
ini.	2	2138	-5002.31	11665			5199	1417	SLV 13	0.12	No
fin.	2	-4051	1740.13	14588			6819	2697	SLV 13	0.18	No
ini.	2	-5841	3556.8	-19444			7535	2966	SLV 1	0.15	No
fin.	2	2437	-4852.07	-8186			5199	1325	SLV 1	0.16	No
ini.	2	2138	-5002.31	11665			5199	1417	SLV 14	0.12	No
fin.	2	-4051	1740.13	14588			6819	2697	SLV 14	0.18	No
ini.	2	-5841	3556.8	-19444			7535	2966	SLV 2	0.15	No
fin.	2	2437	-4852.07	-8186			5199	1325	SLV 2	0.16	No

Tabella dei coefficienti di sicurezza minimi

Stato limite	Coeff.s.	Comb.	Verifica
PF_SLV	2.738	SLV 13	Si
V_SLV	0.122	SLV 13	No
PF_SLU	4.459	SLU 77	Si
V_SLU	0.274	SLU 77	No

Trave di accoppiamento 2

Verifiche condotte secondo D.M. 17-01-18 (N.T.C.)

Dati geometrici

X ini.	Y ini.	Z ini.inf.	Z ini.sup.	H ini.	X fin.	Y fin.	Z fin.inf.	Z fin.sup	H fin.	Luce	Spessore	R. Trazione
-21.883	5.771	0.37	0.67	0.3	-22.883	5.771	0.37	0.67	0.3	1	0.45	30000

Caratteristiche del materiale

(Circolare 7 21-01-19 C8.5.I) Muratura in mattoni pieni e malta di calce LC2_Corti

fb_	fhk	fvk0	fhmedio	τ0	fv0	μ	ϕ	fvk,lim	E	G	FC
120000			172500	9000	20000	0.577	0.767	6500	320000000	128000000	1.2

Verifiche a pressoflessione delle travi in muratura in combinazioni non sismiche

Sezione	γM	N	M	Mu	Comb.	c.s.	Verifica
ini.	3	1293	-160.91	205.48	SLU 83	1.28	Si
fin.	3	222	-358.62	205.48	SLU 83	0.57	No
ini.	3	1310	-145.69	205.48	SLU 80	1.41	Si
fin.	3	186	-353.82	205.48	SLU 80	0.58	No
ini.	3	1255	-153.78	205.48	SLU 74	1.34	Si
fin.	3	228	-343.66	205.48	SLU 74	0.6	No
ini.	3	1313	-147.33	205.48	SLU 78	1.39	Si
fin.	3	192	-354.82	205.48	SLU 78	0.58	No
ini.	3	1290	-160.45	205.48	SLU 84	1.28	Si
fin.	3	223	-357.51	205.48	SLU 84	0.57	No
ini.	3	1316	-147.79	205.48	SLU 77	1.39	Si
fin.	3	192	-355.92	205.48	SLU 77	0.58	No
ini.	3	1252	-153.32	205.48	SLU 75	1.34	Si
fin.	3	228	-342.56	205.48	SLU 75	0.6	No
ini.	3	1232	-166.89	205.48	SLU 81	1.23	Si
fin.	3	259	-346.36	205.48	SLU 81	0.59	No
ini.	3	1229	-166.43	205.48	SLU 82	1.23	Si
fin.	3	259	-345.25	205.48	SLU 82	0.6	No
ini.	3	1313	-146.16	205.48	SLU 79	1.41	Si
fin.	3	186	-354.92	205.48	SLU 79	0.58	No

Verifiche a taglio delle travi in muratura secondo §C8.7.1.3.1 in combinazioni non sismiche

Sezione	γM	N	M	V	Vt	Vp	Vt fess. diag.	Vt,lim	Comb.	c.s.	Verifica
ini.	3	1204	-132.67	1129			347	0	SLU 57	0	No
fin.	3	202	-318.45	-1852			347	97	SLU 57	0.05	No
ini.	3	1124	-152.23	1220			347	0	SLU 60	0	No
fin.	3	268	-309.99	-1832			347	83	SLU 60	0.05	No
ini.	3	1147	-139.11	1149			347	0	SLU 53	0	No
fin.	3	238	-307.3	-1803			347	90	SLU 53	0.05	No
ini.	3	1207	-133.13	1133			347	0	SLU 56	0	No
fin.	3	201	-319.56	-1859			347	97	SLU 56	0.05	No
ini.	3	1205	-131.49	1123			347	0	SLU 58	0	No
fin.	3	196	-318.56	-1852			347	98	SLU 58	0.05	No
ini.	3	1139	-136.71	1134			347	0	SLU 55	0	No
fin.	3	233	-304.45	-1784			347	91	SLU 55	0.05	No
ini.	3	1202	-131.03	1120			347	0	SLU 59	0	No
fin.	3	196	-317.45	-1845			347	98	SLU 59	0.05	No
ini.	3	1121	-151.77	1217			347	0	SLU 61	0	No
fin.	3	269	-308.89	-1825			347	83	SLU 61	0.05	No
ini.	3	789	-98.47	804			347	0	SLU 1	0	No
fin.	3	202	-207.13	-1226			347	97	SLU 1	0.08	No
ini.	3	1144	-138.65	1146			347	0	SLU 54	0	No
fin.	3	238	-306.19	-1796			347	90	SLU 54	0.05	No

Verifiche a pressoflessione delle travi in muratura in combinazioni sismiche

Sezione	γM	N	M	Mu	Comb.	c.s.	Verifica
ini.	2	4625	-200.29	308.22	SLV 10	1.54	Si
fin.	2	900	677.89	308.22	SLV 10	0.45	No
ini.	2	-2931	-16.73	308.22	SLV 7	18.42	Si
fin.	2	-500	-1134.2	308.22	SLV 7	0.27	No
ini.	2	-5164	-280.04	308.22	SLV 11	1.1	Si
fin.	2	1133	-728.73	308.22	SLV 11	0.42	No
ini.	2	6038	342.29	308.22	SLV 2	0.9	No
fin.	2	-2557	-692.95	308.22	SLV 2	0.44	No
ini.	2	6038	342.29	308.22	SLV 1	0.9	No
fin.	2	-2557	-692.95	308.22	SLV 1	0.44	No
ini.	2	-2931	-16.73	308.22	SLV 8	18.42	Si
fin.	2	-500	-1134.2	308.22	SLV 8	0.27	No
ini.	2	-5164	-280.04	308.22	SLV 12	1.1	Si
fin.	2	1133	-728.73	308.22	SLV 12	0.42	No
ini.	2	3101	318.37	308.22	SLV 4	0.97	No
fin.	2	-2487	-1114.93	308.22	SLV 4	0.28	No
ini.	2	3101	318.37	308.22	SLV 3	0.97	No
fin.	2	-2487	-1114.93	308.22	SLV 3	0.28	No
ini.	2	4625	-200.29	308.22	SLV 9	1.54	Si
fin.	2	900	677.89	308.22	SLV 9	0.45	No

Verifiche a taglio delle travi in muratura secondo §C8.7.1.3.1 in combinazioni sismiche

Sezione	γM	N	M	V	Vt	Vp	Vt fess. diag.	Vt,lim	Comb.	c.s.	Verifica
ini.	2	6038	342.29	-1312			520	0	SLV 1	0	No
fin.	2	-2557	-692.95	-3766			1202	428	SLV 1	0.11	No
ini.	2	6858	63.02	-341			520	0	SLV 6	0	No
fin.	2	-733	272.42	-1555			715	283	SLV 6	0.18	No
ini.	2	3101	318.37	-940			520	0	SLV 4	0	No
fin.	2	-2487	-1114.93	-4107			1183	423	SLV 4	0.1	No
ini.	2	3101	318.37	-940			520	0	SLV 3	0	No
fin.	2	-2487	-1114.93	-4107			1183	423	SLV 3	0.1	No
ini.	2	6858	63.02	-341			520	0	SLV 5	0	No
fin.	2	-733	272.42	-1555			715	283	SLV 5	0.18	No

Sezione	γM	N	M	V	Vt	Vp	Vt fess. diag.	Vt,lim	Comb.	c.s.	Verifica
ini.	2	-5164	-280.04	2104			1897	575	SLV 11	0.27	No
fin.	2	1133	-728.73	-1137			520	0	SLV 11	0	No
ini.	2	4625	-200.29	864			520	0	SLV 9	0	No
fin.	2	900	677.89	-1			520	0	SLV 9	0	No
ini.	2	-5164	-280.04	2104			1897	575	SLV 12	0.27	No
fin.	2	1133	-728.73	-1137			520	0	SLV 12	0	No
ini.	2	6038	342.29	-1312			520	0	SLV 2	0	No
fin.	2	-2557	-692.95	-3766			1202	428	SLV 2	0.11	No
ini.	2	4625	-200.29	864			520	0	SLV 10	0	No
fin.	2	900	677.89	-1			520	0	SLV 10	0	No

Tabella dei coefficienti di sicurezza minimi

Stato limite	Coeff.s.	Comb.	Verifica
PF_SLV	0.272	SLV 7	No
V_SLV	0	SLV 1	No
PF_SLU	0.573	SLU 83	No
V_SLU	0	SLU 1	No

Trave di accoppiamento 3

Verifiche condotte secondo D.M. 17-01-18 (N.T.C.)

Dati geometrici

X ini.	Y ini.	Z ini.inf.	Z ini.sup.	H ini.	X fin.	Y fin.	Z fin.inf.	Z fin.sup	H fin.	Luce	Spessore	R. Trazione
-19.638	1.271	-0.03	0.67	0.7	-19.638	2.228	-0.03	0.67	0.7	0.957	0.3	30000

Caratteristiche del materiale

(Circolare 7 21-01-19 C8.5.I) Muratura in mattoni pieni e malta di calce LC2_Corti

fb_	fhk	fvk0	fhmedio	τ0	fv0	μ	ϕ	fvk,lim	E	G	FC
120000			172500	9000	20000	0.577	0.767	6500	320000000	128000000	1.2

Verifiche a pressoflessione delle travi in muratura in combinazioni non sismiche

Sezione	γM	N	M	Mu	Comb.	c.s.	Verifica
ini.	3	179	-157.45	745.81	SLU 75	4.74	Si
fin.	3	-707	-795.84	745.81	SLU 75	0.94	No
ini.	3	181	-158.64	745.81	SLU 80	4.7	Si
fin.	3	-711	-800.26	745.81	SLU 80	0.93	No
ini.	3	190	-168.55	745.81	SLU 83	4.42	Si
fin.	3	-731	-841.6	745.81	SLU 83	0.89	No
ini.	3	183	-160.09	745.81	SLU 78	4.66	Si
fin.	3	-717	-805.02	745.81	SLU 78	0.93	No
ini.	3	185	-159.64	745.81	SLU 74	4.67	Si
fin.	3	-703	-799.38	745.81	SLU 74	0.93	No
ini.	3	181	-163.73	745.81	SLU 82	4.56	Si
fin.	3	-726	-828.89	745.81	SLU 82	0.9	No
ini.	3	187	-160.82	745.81	SLU 79	4.64	Si
fin.	3	-707	-803.79	745.81	SLU 79	0.93	No
ini.	3	186	-165.91	745.81	SLU 81	4.5	Si
fin.	3	-722	-832.42	745.81	SLU 81	0.9	No
ini.	3	184	-166.37	745.81	SLU 84	4.48	Si
fin.	3	-736	-838.07	745.81	SLU 84	0.89	No
ini.	3	188	-162.27	745.81	SLU 77	4.6	Si
fin.	3	-712	-808.55	745.81	SLU 77	0.92	No

Verifiche a taglio delle travi in muratura secondo §C8.7.1.3.1 in combinazioni non sismiche

Sezione	γM	N	M	V	Vt	Vp	Vt fess. diag.	Vt,lim	Comb.	c.s.	Verifica
ini.	3	183	-160.09	-501			592	191	SLU 78	0.38	No
fin.	3	-717	-805.02	-2223			801	317	SLU 78	0.14	No
ini.	3	185	-159.64	-493			592	191	SLU 74	0.39	No
fin.	3	-703	-799.38	-2204			797	315	SLU 74	0.14	No
ini.	3	181	-163.73	-528			592	192	SLU 82	0.36	No
fin.	3	-726	-828.89	-2243			804	318	SLU 82	0.14	No
ini.	3	187	-160.82	-496			592	191	SLU 79	0.38	No
fin.	3	-707	-803.79	-2217			799	316	SLU 79	0.14	No
ini.	3	181	-158.64	-497			592	192	SLU 80	0.39	No
fin.	3	-711	-800.26	-2207			800	316	SLU 80	0.14	No
ini.	3	184	-166.37	-534			592	191	SLU 84	0.36	No
fin.	3	-736	-838.07	-2271			807	319	SLU 84	0.14	No
ini.	3	179	-157.45	-494			592	192	SLU 75	0.39	No
fin.	3	-707	-795.84	-2194			799	316	SLU 75	0.14	No
ini.	3	186	-165.91	-527			592	191	SLU 81	0.36	No
fin.	3	-722	-832.42	-2252			803	317	SLU 81	0.14	No
ini.	3	188	-162.27	-500			592	190	SLU 77	0.38	No
fin.	3	-712	-808.55	-2232			800	316	SLU 77	0.14	No
ini.	3	190	-168.55	-534			592	190	SLU 83	0.36	No
fin.	3	-731	-841.6	-2280			806	318	SLU 83	0.14	No

Verifiche a pressoflessione delle travi in muratura in combinazioni sismiche

Sezione	γM	N	M	Mu	Comb.	c.s.	Verifica
ini.	2	593	-272.18	1118.71	SLV 13	4.11	Si
fin.	2	-498	-687.37	1118.71	SLV 13	1.63	Si
ini.	2	-2136	357.52	1118.71	SLV 8	3.13	Si
fin.	2	-2168	-1562.65	1118.71	SLV 8	0.72	No
ini.	2	-2275	337.15	1118.71	SLV 12	3.32	Si
fin.	2	-2517	-1870.25	1118.71	SLV 12	0.6	No
ini.	2	2528	-543.36	1118.71	SLV 6	2.06	Si
fin.	2	1567	809.24	1118.71	SLV 6	1.38	Si

Sezione	γM	N	M	Mu	Comb.	c.s.	Verifica
ini.	2	-806	-1.92	1118.71	SLV 15	582.11	Si
fin.	2	-1618	-1398.94	1118.71	SLV 15	0.8	No
ini.	2	-2136	357.52	1118.71	SLV 7	3.13	Si
fin.	2	-2168	-1562.65	1118.71	SLV 7	0.72	No
ini.	2	593	-272.18	1118.71	SLV 14	4.11	Si
fin.	2	-498	-687.37	1118.71	SLV 14	1.63	Si
ini.	2	-806	-1.92	1118.71	SLV 16	582.11	Si
fin.	2	-1618	-1398.94	1118.71	SLV 16	0.8	No
ini.	2	-2275	337.15	1118.71	SLV 11	3.32	Si
fin.	2	-2517	-1870.25	1118.71	SLV 11	0.6	No
ini.	2	2528	-543.36	1118.71	SLV 5	2.06	Si
fin.	2	1567	809.24	1118.71	SLV 5	1.38	Si

Verifiche a taglio delle travi in muratura secondo §C8.7.1.3.1 in combinazioni sismiche

Sezione	γM	N	M	V	Vt	Vp	Vt fess. diag.	Vt,lim	Comb.	c.s.	Verifica
ini.	2	2528	-543.36	2055			888	0	SLV 6	0	No
fin.	2	1567	809.24	-946			888	0	SLV 6	0	No
ini.	2	1059	-204.29	1162			888	0	SLV 2	0	No
fin.	2	668	337.93	-1103			888	202	SLV 2	0.18	No
ini.	2	2388	-563.73	1555			888	0	SLV 9	0	No
fin.	2	1217	501.65	-1103			888	0	SLV 9	0	No
ini.	2	2528	-543.36	2055			888	0	SLV 5	0	No
fin.	2	1567	809.24	-946			888	0	SLV 5	0	No
ini.	2	593	-272.18	-505			888	220	SLV 13	0.44	No
fin.	2	-498	-687.37	-1629			1033	406	SLV 13	0.25	No
ini.	2	593	-272.18	-505			888	220	SLV 14	0.44	No
fin.	2	-498	-687.37	-1629			1033	406	SLV 14	0.25	No
ini.	2	-2275	337.15	-2663			1553	594	SLV 11	0.22	No
fin.	2	-2517	-1870.25	-2079			1624	616	SLV 11	0.3	No
ini.	2	1059	-204.29	1162			888	0	SLV 1	0	No
fin.	2	668	337.93	-1103			888	202	SLV 1	0.18	No
ini.	2	2388	-563.73	1555			888	0	SLV 10	0	No
fin.	2	1217	501.65	-1103			888	0	SLV 10	0	No
ini.	2	-2275	337.15	-2663			1553	594	SLV 12	0.22	No
fin.	2	-2517	-1870.25	-2079			1624	616	SLV 12	0.3	No

Tabella dei coefficienti di sicurezza minimi

Stato limite	Coeff.s.	Comb.	Verifica
PF_SLV	0.598	SLV 11	No
V_SLV	0	SLV 1	No
PF_SLU	0.886	SLU 83	No
V_SLU	0.14	SLU 83	No

Trave di accoppiamento 4

Verifiche condotte secondo D.M. 17-01-18 (N.T.C.)

Dati geometrici

X ini.	Y ini.	Z ini.inf.	Z ini.sup.	H ini.	X fin.	Y fin.	Z fin.inf.	Z fin.sup	H fin.	Luce	Spessore	R. Trazione
-21.572	-3.32	-2.03	-0.03	2	-22.572	-3.32	-2.03	-0.03	2	1	0.45	30000

Caratteristiche del materiale

(Circolare 7 21-01-19 C8.5.I) Muratura in mattoni pieni e malta di calce LC2_Corti

fb_	fhk	fvk0	fhmedio	τ0	fv0	μ	ϕ	fvk,lim	E	G	FC
120000			172500	9000	20000	0.577	0.767	6500	320000000	128000000	1.2

Verifiche a pressoflessione delle travi in muratura in combinazioni non sismiche

Sezione	γM	N	M	Mu	Comb.	c.s.	Verifica
ini.	3	-2632	-641.31	9132.35	SLU 84	14.24	Si
fin.	3	-1931	-2385.82	9132.35	SLU 84	3.83	Si
ini.	3	-1816	-849.96	9132.35	SLU 55	10.74	Si
fin.	3	-1085	-2576.3	9132.35	SLU 55	3.54	Si
ini.	3	-2008	-893.39	9132.35	SLU 73	10.22	Si
fin.	3	-1269	-2670.07	9132.35	SLU 73	3.42	Si
ini.	3	-1488	-844.13	9132.35	SLU 44	10.82	Si
fin.	3	-845	-2384.96	9132.35	SLU 44	3.83	Si
ini.	3	-1771	-845.31	9132.35	SLU 68	10.8	Si
fin.	3	-1048	-2570.95	9132.35	SLU 68	3.55	Si
ini.	3	-2054	-872.26	9132.35	SLU 76	10.47	Si
fin.	3	-1278	-2716.18	9132.35	SLU 76	3.36	Si
ini.	3	-1726	-866.44	9132.35	SLU 65	10.54	Si
fin.	3	-1038	-2524.84	9132.35	SLU 65	3.62	Si
ini.	3	-1533	-823	9132.35	SLU 47	11.1	Si
fin.	3	-854	-2431.07	9132.35	SLU 47	3.76	Si
ini.	3	-1509	-823.25	9132.35	SLU 34	11.09	Si
fin.	3	-815	-2429.2	9132.35	SLU 34	3.76	Si
ini.	3	-1770	-871.08	9132.35	SLU 52	10.48	Si
fin.	3	-1075	-2530.19	9132.35	SLU 52	3.61	Si

Verifiche a taglio delle travi in muratura secondo §C8.7.1.3.1 in combinazioni non sismiche

Sezione	γM	N	M	V	Vt	Vp	Vt fess. diag.	Vt,lim	Comb.	c.s.	Verifica
ini.	3	-2008	-893.39	-6028			4269	1685	SLU 73	0.28	No
fin.	3	-1269	-2670.07	55			3974	1556	SLU 73	28.37	Si
ini.	3	-2054	-872.26	-6161			4288	1693	SLU 76	0.27	No
fin.	3	-1278	-2716.18	-23			3977	1558	SLU 76	68.61	Si
ini.	3	-2632	-641.31	-6080			4519	1787	SLU 84	0.29	No
fin.	3	-1931	-2385.82	220			4238	1672	SLU 84	7.6	Si

Sezione	γM	N	M	V	Vt	Vp	Vt fess. diag.	Vt,lim	Comb.	c.s.	Verifica
ini.	3	-1770	-871.08	-5541			4174	1645	SLU 52	0.3	No
fin.	3	-1075	-2530.19	-41			3896	1520	SLU 52	37.46	Si
ini.	3	-1726	-866.44	-5475			4156	1637	SLU 65	0.3	No
fin.	3	-1038	-2524.84	-78			3881	1513	SLU 65	19.35	Si
ini.	3	-1816	-849.96	-5673			4192	1653	SLU 55	0.29	No
fin.	3	-1085	-2576.3	-118			3900	1522	SLU 55	12.88	Si
ini.	3	-2557	-608.63	-5975			4489	1775	SLU 80	0.3	No
fin.	3	-1841	-2369.68	86			4203	1657	SLU 80	19.37	Si
ini.	3	-2587	-662.43	-5947			4501	1780	SLU 82	0.3	No
fin.	3	-1921	-2339.71	298			4234	1671	SLU 82	5.61	Si
ini.	3	-1771	-845.31	-5608			4175	1645	SLU 68	0.29	No
fin.	3	-1048	-2570.95	-156			3885	1515	SLU 68	9.73	Si
ini.	3	-2565	-614.87	-5986			4492	1776	SLU 78	0.3	No
fin.	3	-1855	-2375.12	105			4208	1659	SLU 78	15.82	Si

Verifiche a pressoflessione delle travi in muratura in combinazioni sismiche

Sezione	γM	N	M	Mu	Comb.	c.s.	Verifica
ini.	2	-6780	3839.98	13698.53	SLV 2	3.57	Si
fin.	2	90	-7469.64	13698.53	SLV 2	1.83	Si
ini.	2	-2269	-182.74	13698.53	SLV 10	74.96	Si
fin.	2	166	-4705.17	13698.53	SLV 10	2.91	Si
ini.	2	-6780	3839.98	13698.53	SLV 1	3.57	Si
fin.	2	90	-7469.64	13698.53	SLV 1	1.83	Si
ini.	2	293	-2445.24	13698.53	SLV 12	5.6	Si
fin.	2	-4687	5182.46	13698.53	SLV 12	2.64	Si
ini.	2	-4765	2039.38	13698.53	SLV 6	6.72	Si
fin.	2	915	-7578.32	13698.53	SLV 6	1.81	Si
ini.	2	2309	-4245.84	13698.53	SLV 16	3.23	Si
fin.	2	-3862	5073.79	13698.53	SLV 16	2.7	Si
ini.	2	2309	-4245.84	13698.53	SLV 15	3.23	Si
fin.	2	-3862	5073.79	13698.53	SLV 15	2.7	Si
ini.	2	-2269	-182.74	13698.53	SLV 9	74.96	Si
fin.	2	166	-4705.17	13698.53	SLV 9	2.91	Si
ini.	2	293	-2445.24	13698.53	SLV 11	5.6	Si
fin.	2	-4687	5182.46	13698.53	SLV 11	2.64	Si
ini.	2	-4765	2039.38	13698.53	SLV 5	6.72	Si
fin.	2	915	-7578.32	13698.53	SLV 5	1.81	Si

Verifiche a taglio delle travi in muratura secondo §C8.7.1.3.1 in combinazioni sismiche

Sezione	γM	N	M	V	Vt	Vp	Vt fess. diag.	Vt,lim	Comb.	c.s.	Verifica
ini.	2	2309	-4245.84	10919			5199	1365	SLV 16	0.13	No
fin.	2	-3862	5073.79	13435			6744	2667	SLV 16	0.2	No
ini.	2	-6012	3161.22	-17367			7604	2990	SLV 3	0.17	No
fin.	2	-1366	-4503.35	-12968			5746	2234	SLV 3	0.17	No
ini.	2	-4765	2039.38	-9313			7105	2807	SLV 6	0.3	No
fin.	2	915	-7578.32	-3379			5199	1746	SLV 6	0.52	No
ini.	2	-4765	2039.38	-9313			7105	2807	SLV 5	0.3	No
fin.	2	915	-7578.32	-3379			5199	1746	SLV 5	0.52	No
ini.	2	-6780	3839.98	-18219			7911	3098	SLV 2	0.17	No
fin.	2	90	-7469.64	-12807			5199	1937	SLV 2	0.15	No
ini.	2	-6012	3161.22	-17367			7604	2990	SLV 4	0.17	No
fin.	2	-1366	-4503.35	-12968			5746	2234	SLV 4	0.17	No
ini.	2	1540	-3567.08	10067			5199	1587	SLV 13	0.16	No
fin.	2	-2406	2107.5	13596			6161	2424	SLV 13	0.18	No
ini.	2	-6780	3839.98	-18219			7911	3098	SLV 1	0.17	No
fin.	2	90	-7469.64	-12807			5199	1937	SLV 1	0.15	No
ini.	2	2309	-4245.84	10919			5199	1365	SLV 15	0.13	No
fin.	2	-3862	5073.79	13435			6744	2667	SLV 15	0.2	No
ini.	2	1540	-3567.08	10067			5199	1587	SLV 14	0.16	No
fin.	2	-2406	2107.5	13596			6161	2424	SLV 14	0.18	No

Tabella dei coefficienti di sicurezza minimi

Stato limite	Coeff.s.	Comb.	Verifica
PF_SLV	1.808	SLV 5	Si
V_SLV	0.125	SLV 15	No
PF_SLU	3.362	SLU 76	Si
V_SLU	0.275	SLU 76	No

Trave di accoppiamento 5

Verifiche condotte secondo D.M. 17-01-18 (N.T.C.)

Dati geometrici

X ini.	Y ini.	Z ini.inf.	Z ini.sup.	H ini.	X fin.	Y fin.	Z fin.inf.	Z fin.sup	H fin.	Luce	Spessore	R. Trazione
-21.572	-3.32	0.37	0.67	0.3	-22.572	-3.32	0.37	0.67	0.3	1	0.45	30000

Caratteristiche del materiale

(Circolare 7 21-01-19 C8.5.I) Muratura in mattoni pieni e malta di calce LC2_Corti

fb_	fhk	fvk0	fhmedio	τ0	fv0	μ	ϕ	fvk,lim	E	G	FC
120000			172500	9000	20000	0.577	0.767	6500	320000000	128000000	1.2

Verifiche a pressoflessione delle travi in muratura in combinazioni non sismiche

Sezione	γM	N	M	Mu	Comb.	c.s.	Verifica
ini.	3	1756	-172.12	205.48	SLU 55	1.19	Si
fin.	3	1339	-391.55	205.48	SLU 55	0.52	No
ini.	3	1803	-190.62	205.48	SLU 76	1.08	Si
fin.	3	1370	-422.2	205.48	SLU 76	0.49	No

Sezione	γM	N	M	Mu	Comb.	c.s.	Verifica
ini.	3	1664	-172	205.48	SLU 34	1.19	Si
fin.	3	1255	-379.24	205.48	SLU 34	0.54	No
ini.	3	1400	-181.59	205.48	SLU 84	1.13	Si
fin.	3	1066	-386.4	205.48	SLU 84	0.53	No
ini.	3	1416	-168.01	205.48	SLU 78	1.22	Si
fin.	3	1066	-379.1	205.48	SLU 78	0.54	No
ini.	3	1731	-176.22	205.48	SLU 52	1.17	Si
fin.	3	1340	-384.17	205.48	SLU 52	0.53	No
ini.	3	1779	-194.72	205.48	SLU 73	1.06	Si
fin.	3	1371	-414.82	205.48	SLU 73	0.5	No
ini.	3	1770	-165.59	205.48	SLU 68	1.24	Si
fin.	3	1350	-386.72	205.48	SLU 68	0.53	No
ini.	3	1376	-185.69	205.48	SLU 82	1.11	Si
fin.	3	1067	-379.02	205.48	SLU 82	0.54	No
ini.	3	1746	-169.69	205.48	SLU 65	1.21	Si
fin.	3	1351	-379.34	205.48	SLU 65	0.54	No

Verifiche a taglio delle travi in muratura secondo §C8.7.1.3.1 in combinazioni non sismiche

Sezione	γM	N	M	V	Vt	Vp	Vt fess. diag.	Vt,lim	Comb.	c.s.	Verifica
ini.	3	1344	-153.61	1377			347	0	SLU 54	0	No
fin.	3	1035	-341.07	-1708			347	0	SLU 54	0	No
ini.	3	703	-137.56	1257			347	0	SLU 60	0	No
fin.	3	566	-271.86	-1387			347	0	SLU 60	0	No
ini.	3	1363	-148.27	1365			347	0	SLU 59	0	No
fin.	3	1025	-347.93	-1728			347	0	SLU 59	0	No
ini.	3	738	-118.64	1162			347	0	SLU 58	0	No
fin.	3	555	-271.42	-1347			347	0	SLU 58	0	No
ini.	3	743	-119.88	1168			347	0	SLU 56	0	No
fin.	3	565	-271.95	-1350			347	0	SLU 56	0	No
ini.	3	1369	-149.51	1371			347	0	SLU 57	0	No
fin.	3	1034	-348.46	-1731			347	0	SLU 57	0	No
ini.	3	517	-83.19	791			347	0	SLU 1	0	No
fin.	3	422	-178.22	-890			347	33	SLU 1	0.04	No
ini.	3	719	-123.98	1174			347	0	SLU 53	0	No
fin.	3	566	-264.57	-1327			347	0	SLU 53	0	No
ini.	3	1328	-167.19	1460			347	0	SLU 61	0	No
fin.	3	1035	-348.37	-1769			347	0	SLU 61	0	No
ini.	3	1756	-172.12	1505			347	0	SLU 55	0	No
fin.	3	1339	-391.55	-1959			347	0	SLU 55	0	No

Verifiche a pressoflessione delle travi in muratura in combinazioni sismiche

Sezione	γM	N	M	Mu	Comb.	c.s.	Verifica
ini.	2	-6387	-209.35	308.22	SLV 12	1.47	Si
fin.	2	-1311	838.29	308.22	SLV 12	0.37	No
ini.	2	5033	520.27	308.22	SLV 2	0.59	No
fin.	2	189	-1397.38	308.22	SLV 2	0.22	No
ini.	2	7467	18.09	308.22	SLV 5	17.04	Si
fin.	2	2184	-1232.52	308.22	SLV 5	0.25	No
ini.	2	1354	567.12	308.22	SLV 4	0.54	No
fin.	2	-1013	-952.12	308.22	SLV 4	0.32	No
ini.	2	-6387	-209.35	308.22	SLV 11	1.47	Si
fin.	2	-1311	838.29	308.22	SLV 11	0.37	No
ini.	2	-3952	-711.53	308.22	SLV 16	0.43	No
fin.	2	684	1003.15	308.22	SLV 16	0.31	No
ini.	2	-3952	-711.53	308.22	SLV 15	0.43	No
fin.	2	684	1003.15	308.22	SLV 15	0.31	No
ini.	2	7467	18.09	308.22	SLV 6	17.04	Si
fin.	2	2184	-1232.52	308.22	SLV 6	0.25	No
ini.	2	1354	567.12	308.22	SLV 3	0.54	No
fin.	2	-1013	-952.12	308.22	SLV 3	0.32	No
ini.	2	5033	520.27	308.22	SLV 1	0.59	No
fin.	2	189	-1397.38	308.22	SLV 1	0.22	No

Verifiche a taglio delle travi in muratura secondo §C8.7.1.3.1 in combinazioni sismiche

Sezione	γM	N	M	V	Vt	Vp	Vt fess. diag.	Vt,lim	Comb.	c.s.	Verifica
ini.	2	5876	-365.5	2116			520	0	SLV 9	0	No
fin.	2	2693	-645.94	-1581			520	0	SLV 9	0	No
ini.	2	7467	18.09	964			520	0	SLV 6	0	No
fin.	2	2184	-1232.52	-2998			520	0	SLV 6	0	No
ini.	2	5876	-365.5	2116			520	0	SLV 10	0	No
fin.	2	2693	-645.94	-1581			520	0	SLV 10	0	No
ini.	2	-273	-758.37	3006			593	232	SLV 14	0.08	No
fin.	2	1886	557.89	980			520	0	SLV 14	0	No
ini.	2	5033	520.27	-834			520	0	SLV 2	0	No
fin.	2	189	-1397.38	-3746			520	166	SLV 2	0.04	No
ini.	2	5033	520.27	-834			520	0	SLV 1	0	No
fin.	2	189	-1397.38	-3746			520	166	SLV 1	0.04	No
ini.	2	-273	-758.37	3006			593	232	SLV 13	0.08	No
fin.	2	1886	557.89	980			520	0	SLV 13	0	No
ini.	2	1354	567.12	-1223			520	0	SLV 4	0	No
fin.	2	-1013	-952.12	-2969			790	309	SLV 4	0.1	No
ini.	2	7467	18.09	964			520	0	SLV 5	0	No
fin.	2	2184	-1232.52	-2998			520	0	SLV 5	0	No
ini.	2	1354	567.12	-1223			520	0	SLV 3	0	No
fin.	2	-1013	-952.12	-2969			790	309	SLV 3	0.1	No

Tabella dei coefficienti di sicurezza minimi

Stato limite	Coeff.s.	Comb.	Verifica
PF_SLV	0.221	SLV 1	No
V_SLV	0	SLV 1	No

Stato limite	Coeff.s.	Comb.	Verifica
PF_SLU	0.487	SLU 76	No
V_SLU	0	SLU 1	No

Trave di accoppiamento 6

Verifiche condotte secondo D.M. 17-01-18 (N.T.C.)

Dati geometrici

X ini.	Y ini.	Z ini.inf.	Z ini.sup.	H ini.	X fin.	Y fin.	Z fin.inf.	Z fin.sup	H fin.	Luce	Spessore	R. Trazione
-17.272	-3.32	-2.03	-0.03	2	-18.272	-3.32	-2.03	-0.03	2	1	0.45	30000

Caratteristiche del materiale

(Circolare 7 21-01-19 C8.5.I) Muratura in mattoni pieni e malta di calce LC2_Corti

fb_	fhk	fvk0	fhmedio	τ0	fv0	μ	ϕ	fvk,lim	E	G	FC
120000			172500	9000	20000	0.577	0.767	6500	320000000	128000000	1.2

Verifiche a pressoflessione delle travi in muratura in combinazioni non sismiche

Sezione	γM	N	M	Mu	Comb.	c.s.	Verifica
ini.	3	-1941	-3149.51	9132.35	SLU 78	2.9	Si
fin.	3	-1827	-2172.42	9132.35	SLU 78	4.2	Si
ini.	3	-1590	-3363.61	9132.35	SLU 77	2.72	Si
fin.	3	-1215	-2445.2	9132.35	SLU 77	3.73	Si
ini.	3	-2032	-3246.39	9132.35	SLU 84	2.81	Si
fin.	3	-1932	-2213.61	9132.35	SLU 84	4.13	Si
ini.	3	-1654	-3452.24	9132.35	SLU 81	2.65	Si
fin.	3	-1339	-2451.41	9132.35	SLU 81	3.73	Si
ini.	3	-1563	-3355.36	9132.35	SLU 74	2.72	Si
fin.	3	-1233	-2410.22	9132.35	SLU 74	3.79	Si
ini.	3	-1545	-3154.47	9132.35	SLU 62	2.9	Si
fin.	3	-1208	-2291.51	9132.35	SLU 62	3.99	Si
ini.	3	-2005	-3238.14	9132.35	SLU 82	2.82	Si
fin.	3	-1950	-2178.64	9132.35	SLU 82	4.19	Si
ini.	3	-1519	-3146.22	9132.35	SLU 60	2.9	Si
fin.	3	-1226	-2256.54	9132.35	SLU 60	4.05	Si
ini.	3	-1605	-3333.78	9132.35	SLU 79	2.74	Si
fin.	3	-1219	-2432.75	9132.35	SLU 79	3.75	Si
ini.	3	-1681	-3460.49	9132.35	SLU 83	2.64	Si
fin.	3	-1320	-2486.39	9132.35	SLU 83	3.67	Si

Verifiche a taglio delle travi in muratura secondo §C8.7.1.3.1 in combinazioni non sismiche

Sezione	γM	N	M	V	Vt	Vp	Vt fess. diag.	Vt,lim	Comb.	c.s.	Verifica
ini.	3	-1605	-3333.78	-9201			4108	1616	SLU 79	0.18	No
fin.	3	-1219	-2432.75	7493			3954	1547	SLU 79	0.21	No
ini.	3	-1956	-3119.69	-9137			4249	1677	SLU 80	0.18	No
fin.	3	-1831	-2159.97	8068			4198	1655	SLU 80	0.21	No
ini.	3	-2005	-3238.14	-9259			4268	1685	SLU 82	0.18	No
fin.	3	-1950	-2178.64	8446			4246	1675	SLU 82	0.2	No
ini.	3	-2032	-3246.39	-9403			4279	1689	SLU 84	0.18	No
fin.	3	-1932	-2213.61	8432			4239	1672	SLU 84	0.2	No
ini.	3	-1681	-3460.49	-9467			4138	1629	SLU 83	0.17	No
fin.	3	-1320	-2486.39	7857			3994	1565	SLU 83	0.2	No
ini.	3	-1941	-3149.51	-9153			4242	1674	SLU 78	0.18	No
fin.	3	-1827	-2172.42	8128			4197	1654	SLU 78	0.2	No
ini.	3	-1563	-3355.36	-9074			4091	1609	SLU 74	0.18	No
fin.	3	-1233	-2410.22	7567			3959	1549	SLU 74	0.2	No
ini.	3	-1590	-3363.61	-9218			4102	1613	SLU 77	0.18	No
fin.	3	-1215	-2445.2	7553			3952	1546	SLU 77	0.2	No
ini.	3	-1545	-3154.47	-8696			4084	1606	SLU 62	0.18	No
fin.	3	-1208	-2291.51	7135			3949	1545	SLU 62	0.22	No
ini.	3	-1654	-3452.24	-9323			4128	1625	SLU 81	0.17	No
fin.	3	-1339	-2451.41	7871			4001	1569	SLU 81	0.2	No

Verifiche a pressoflessione delle travi in muratura in combinazioni sismiche

Sezione	γM	N	M	Mu	Comb.	c.s.	Verifica
ini.	2	792	-5541.64	13698.53	SLV 10	2.47	Si
fin.	2	-3082	-963.8	13698.53	SLV 10	14.21	Si
ini.	2	-8069	3792.84	13698.53	SLV 1	3.61	Si
fin.	2	-833	-2278.95	13698.53	SLV 1	6.01	Si
ini.	2	5826	-9212.48	13698.53	SLV 13	1.49	Si
fin.	2	-2089	-778.95	13698.53	SLV 13	17.59	Si
ini.	2	5826	-9212.48	13698.53	SLV 14	1.49	Si
fin.	2	-2089	-778.95	13698.53	SLV 14	17.59	Si
ini.	2	5973	-8457.32	13698.53	SLV 15	1.62	Si
fin.	2	-861	-1070.51	13698.53	SLV 15	12.8	Si
ini.	2	5973	-8457.32	13698.53	SLV 16	1.62	Si
fin.	2	-861	-1070.51	13698.53	SLV 16	12.8	Si
ini.	2	-7923	4547.99	13698.53	SLV 3	3.01	Si
fin.	2	395	-2570.52	13698.53	SLV 3	5.33	Si
ini.	2	-7923	4547.99	13698.53	SLV 4	3.01	Si
fin.	2	395	-2570.52	13698.53	SLV 4	5.33	Si
ini.	2	-8069	3792.84	13698.53	SLV 2	3.61	Si
fin.	2	-833	-2278.95	13698.53	SLV 2	6.01	Si
ini.	2	792	-5541.64	13698.53	SLV 9	2.47	Si
fin.	2	-3082	-963.8	13698.53	SLV 9	14.21	Si

Verifiche a taglio delle travi in muratura secondo §C8.7.1.3.1 in combinazioni sismiche

Sezione	γM	N	M	V	Vt	Vp	Vt fess. diag.	Vt,lim	Comb.	c.s.	Verifica
ini.	2	5973	-8457.32	7193			5199	0	SLV 15	0	No
fin.	2	-861	-1070.51	19259			5544	2136	SLV 15	0.11	No
ini.	2	5826	-9212.48	5530			5199	0	SLV 13	0	No
fin.	2	-2089	-778.95	21749			6035	2368	SLV 13	0.11	No
ini.	2	-8069	3792.84	-19644			8427	3270	SLV 2	0.17	No
fin.	2	-833	-2278.95	-8795			5532	2130	SLV 2	0.24	No
ini.	2	5826	-9212.48	5530			5199	0	SLV 14	0	No
fin.	2	-2089	-778.95	21749			6035	2368	SLV 14	0.11	No
ini.	2	-8069	3792.84	-19644			8427	3270	SLV 1	0.17	No
fin.	2	-833	-2278.95	-8795			5532	2130	SLV 1	0.24	No
ini.	2	792	-5541.64	-5221			5199	1776	SLV 9	0.34	No
fin.	2	-3082	-963.8	13963			6432	2540	SLV 9	0.18	No
ini.	2	-7923	4547.99	-17981			8368	3251	SLV 3	0.18	No
fin.	2	395	-2570.52	-11285			5199	1869	SLV 3	0.17	No
ini.	2	5973	-8457.32	7193			5199	0	SLV 16	0	No
fin.	2	-861	-1070.51	19259			5544	2136	SLV 16	0.11	No
ini.	2	792	-5541.64	-5221			5199	1776	SLV 10	0.34	No
fin.	2	-3082	-963.8	13963			6432	2540	SLV 10	0.18	No
ini.	2	-7923	4547.99	-17981			8368	3251	SLV 4	0.18	No
fin.	2	395	-2570.52	-11285			5199	1869	SLV 4	0.17	No

Tabella dei coefficienti di sicurezza minimi

Stato limite	Coeff.s.	Comb.	Verifica
PF_SLV	1.487	SLV 13	Si
V_SLV	0	SLV 13	No
PF_SLU	2.639	SLU 83	Si
V_SLU	0.172	SLU 83	No

Trave di accoppiamento 7

Verifiche condotte secondo D.M. 17-01-18 (N.T.C.)

Dati geometrici

X ini.	Y ini.	Z ini.inf.	Z ini.sup.	H ini.	X fin.	Y fin.	Z fin.inf.	Z fin.sup	H fin.	Luce	Spessore	R. Trazione
-17.272	-3.32	0.37	0.67	0.3	-18.272	-3.32	0.37	0.67	0.3	1	0.45	30000

Caratteristiche del materiale

(Circolare 7 21-01-19 C8.5.I) Muratura in mattoni pieni e malta di calce LC2_Corti

fb_	fhk	fvk0	fhmedio	τ0	fv0	μ	ϕ	fvk,lim	E	G	FC
120000			172500	9000	20000	0.577	0.767	6500	320000000	128000000	1.2

Verifiche a pressoflessione delle travi in muratura in combinazioni non sismiche

Sezione	γM	N	M	Mu	Comb.	c.s.	Verifica
ini.	3	2031	-54.91	205.48	SLU 77	3.74	Si
fin.	3	3264	-460.44	205.48	SLU 77	0.45	No
ini.	3	2023	-53.99	205.48	SLU 79	3.81	Si
fin.	3	3238	-459.69	205.48	SLU 79	0.45	No
ini.	3	2104	-66.99	205.48	SLU 83	3.07	Si
fin.	3	3358	-472.66	205.48	SLU 83	0.43	No
ini.	3	2012	-59.03	205.48	SLU 74	3.48	Si
fin.	3	3247	-451.89	205.48	SLU 74	0.45	No
ini.	3	1905	-41.94	205.48	SLU 82	4.9	Si
fin.	3	2616	-461.74	205.48	SLU 82	0.45	No
ini.	3	1924	-37.81	205.48	SLU 84	5.43	Si
fin.	3	2633	-470.29	205.48	SLU 84	0.44	No
ini.	3	2085	-71.11	205.48	SLU 81	2.89	Si
fin.	3	3341	-464.11	205.48	SLU 81	0.44	No
ini.	3	1833	-29.86	205.48	SLU 75	6.88	Si
fin.	3	2522	-449.52	205.48	SLU 75	0.46	No
ini.	3	1852	-25.74	205.48	SLU 78	7.98	Si
fin.	3	2540	-458.06	205.48	SLU 78	0.45	No
ini.	3	1844	-24.81	205.48	SLU 80	8.28	Si
fin.	3	2513	-457.32	205.48	SLU 80	0.45	No

Verifiche a taglio delle travi in muratura secondo §C8.7.1.3.1 in combinazioni non sismiche

Sezione	γM	N	M	V	Vt	Vp	Vt fess. diag.	Vt,lim	Comb.	c.s.	Verifica
ini.	3	1244	-23.9	1141			347	0	SLU 1	0	No
fin.	3	2062	-281.19	-1477			347	0	SLU 1	0	No
ini.	3	1808	-43.13	1683			347	0	SLU 53	0	No
fin.	3	2942	-411.05	-2160			347	0	SLU 53	0	No
ini.	3	1648	-9.83	1544			347	0	SLU 57	0	No
fin.	3	2234	-417.22	-2288			347	0	SLU 57	0	No
ini.	3	1701	-26.03	1641			347	0	SLU 61	0	No
fin.	3	2311	-420.9	-2339			347	0	SLU 61	0	No
ini.	3	1501	6.42	1437			347	0	SLU 55	0	No
fin.	3	1707	-406.35	-2315			347	0	SLU 55	0	No
ini.	3	1629	-13.96	1542			347	0	SLU 54	0	No
fin.	3	2217	-408.68	-2257			347	0	SLU 54	0	No
ini.	3	1827	-39.01	1685			347	0	SLU 56	0	No
fin.	3	2959	-419.59	-2191			347	0	SLU 56	0	No
ini.	3	1881	-55.21	1782			347	0	SLU 60	0	No
fin.	3	3035	-423.27	-2243			347	0	SLU 60	0	No
ini.	3	1819	-38.08	1674			347	0	SLU 58	0	No
fin.	3	2932	-418.85	-2185			347	0	SLU 58	0	No
ini.	3	1640	-8.91	1533			347	0	SLU 59	0	No

Sezione	γM	N	M	V	Vt	Vp	Vt fess. diag.	Vt,lim	Comb.	c.s.	Verifica
fin.	3	2208	-416.47	-2282			347	0	SLU 59	0	No

Verifiche a pressoflessione delle travi in muratura in combinazioni sismiche

Sezione	γM	N	M	Mu	Comb.	c.s.	Verifica
ini.	2	2723	570.26	308.22	SLV 4	0.54	No
fin.	2	-3806	-932.07	308.22	SLV 4	0.33	No
ini.	2	-4952	260.01	308.22	SLV 6	1.19	Si
fin.	2	6366	-735.5	308.22	SLV 6	0.42	No
ini.	2	-980	632.45	308.22	SLV 2	0.49	No
fin.	2	-537	-1064.64	308.22	SLV 2	0.29	No
ini.	2	14	-638.98	308.22	SLV 14	0.48	No
fin.	2	8289	317.65	308.22	SLV 14	0.97	No
ini.	2	3717	-701.17	308.22	SLV 16	0.44	No
fin.	2	5020	450.22	308.22	SLV 16	0.68	No
ini.	2	3717	-701.17	308.22	SLV 15	0.44	No
fin.	2	5020	450.22	308.22	SLV 15	0.68	No
ini.	2	14	-638.98	308.22	SLV 13	0.48	No
fin.	2	8289	317.65	308.22	SLV 13	0.97	No
ini.	2	-4952	260.01	308.22	SLV 5	1.19	Si
fin.	2	6366	-735.5	308.22	SLV 5	0.42	No
ini.	2	-980	632.45	308.22	SLV 1	0.49	No
fin.	2	-537	-1064.64	308.22	SLV 1	0.29	No
ini.	2	2723	570.26	308.22	SLV 3	0.54	No
fin.	2	-3806	-932.07	308.22	SLV 3	0.33	No

Verifiche a taglio delle travi in muratura secondo §C8.7.1.3.1 in combinazioni sismiche

Sezione	γM	N	M	V	Vt	Vp	Vt fess. diag.	Vt,lim	Comb.	c.s.	Verifica
ini.	2	-4654	-121.42	2536			1761	550	SLV 9	0.22	No
fin.	2	9014	-320.81	-1598			520	0	SLV 9	0	No
ini.	2	-4654	-121.42	2536			1761	550	SLV 10	0.22	No
fin.	2	9014	-320.81	-1598			520	0	SLV 10	0	No
ini.	2	-4952	260.01	1303			1840	565	SLV 5	0.43	No
fin.	2	6366	-735.5	-2699			520	0	SLV 5	0	No
ini.	2	7689	-328.73	1249			520	0	SLV 12	0	No
fin.	2	-1883	121.09	-546			1022	381	SLV 12	0.7	No
ini.	2	7391	52.7	16			520	0	SLV 8	0	No
fin.	2	-4531	-293.6	-1647			1728	543	SLV 8	0.33	No
ini.	2	7689	-328.73	1249			520	0	SLV 11	0	No
fin.	2	-1883	121.09	-546			1022	381	SLV 11	0.7	No
ini.	2	-4952	260.01	1303			1840	565	SLV 6	0.43	No
fin.	2	6366	-735.5	-2699			520	0	SLV 6	0	No
ini.	2	7391	52.7	16			520	0	SLV 7	0	No
fin.	2	-4531	-293.6	-1647			1728	543	SLV 7	0.33	No
ini.	2	2723	570.26	-972			520	0	SLV 3	0	No
fin.	2	-3806	-932.07	-3301			1535	504	SLV 3	0.15	No
ini.	2	2723	570.26	-972			520	0	SLV 4	0	No
fin.	2	-3806	-932.07	-3301			1535	504	SLV 4	0.15	No

Tabella dei coefficienti di sicurezza minimi

Stato limite	Coeff.s.	Comb.	Verifica
PF_SLV	0.29	SLV 1	No
V_SLV	0	SLV 3	No
PF_SLU	0.435	SLU 83	No
V_SLU	0	SLU 1	No

Trave di accoppiamento 8

Verifiche condotte secondo D.M. 17-01-18 (N.T.C.)

Dati geometrici

X ini.	Y ini.	Z ini.inf.	Z ini.sup.	H ini.	X fin.	Y fin.	Z fin.inf.	Z fin.sup	H fin.	Luce	Spessore	R. Trazione
-14.223	-3.32	0.07	0.67	0.6	-16.523	-3.32	0.07	0.67	0.6	2.3	0.45	30000

Caratteristiche del materiale

(Circolare 7 21-01-19 C8.5.I) Muratura in mattoni pieni e malta di calce LC2_Corti

fb_	fhk	fvk0	fhmedio	τ0	fv0	μ	ϕ	fvk,lim	E	G	FC
120000			172500	9000	20000	0.577	0.767	6500	320000000	128000000	1.2

Verifiche a pressoflessione delle travi in muratura in combinazioni non sismiche

Sezione	γM	N	M	Mu	Comb.	c.s.	Verifica
ini.	3	2204	-573.18	821.91	SLU 79	1.43	Si
fin.	3	2291	-351.17	821.91	SLU 79	2.34	Si
ini.	3	2185	-565.61	821.91	SLU 80	1.45	Si
fin.	3	2387	-381.84	821.91	SLU 80	2.15	Si
ini.	3	2338	-576.67	821.91	SLU 82	1.43	Si
fin.	3	2463	-391.88	821.91	SLU 82	2.1	Si
ini.	3	2364	-587.58	821.91	SLU 83	1.4	Si
fin.	3	2388	-367.05	821.91	SLU 83	2.24	Si
ini.	3	2216	-577.17	821.91	SLU 77	1.42	Si
fin.	3	2299	-349.6	821.91	SLU 77	2.35	Si
ini.	3	2357	-584.24	821.91	SLU 81	1.41	Si
fin.	3	2368	-361.21	821.91	SLU 81	2.28	Si
ini.	3	2189	-566.27	821.91	SLU 75	1.45	Si
fin.	3	2375	-374.43	821.91	SLU 75	2.2	Si
ini.	3	2197	-569.61	821.91	SLU 78	1.44	Si
fin.	3	2394	-380.27	821.91	SLU 78	2.16	Si
ini.	3	2209	-573.83	821.91	SLU 74	1.43	Si

Sezione	γM	N	M	Mu	Comb.	c.s.	Verifica
fin.	3	2279	-343.76	821.91	SLU 74	2.39	Si
ini.	3	2345	-580.01	821.91	SLU 84	1.42	Si
fin.	3	2483	-397.72	821.91	SLU 84	2.07	Si

Verifiche a taglio delle travi in muratura secondo §C8.7.1.3.1 in combinazioni non sismiche

Sezione	γM	N	M	V	Vt	Vp	Vt fess. diag.	Vt,lim	Comb.	c.s.	Verifica
ini.	3	2102	-523.46	-1654			693	0	SLU 61	0	No
fin.	3	2236	-357.31	-478			693	0	SLU 61	0	No
ini.	3	1264	-377.02	-1132			693	0	SLU 1	0	No
fin.	3	1409	-204.7	-247			693	0	SLU 1	0	No
ini.	3	2122	-531.02	-1653			693	0	SLU 60	0	No
fin.	3	2140	-326.64	-441			693	0	SLU 60	0	No
ini.	3	1950	-512.4	-1638			693	0	SLU 59	0	No
fin.	3	2159	-347.26	-435			693	0	SLU 59	0	No
ini.	3	1969	-519.96	-1637			693	0	SLU 58	0	No
fin.	3	2064	-316.6	-398			693	0	SLU 58	0	No
ini.	3	1981	-523.96	-1645			693	0	SLU 56	0	No
fin.	3	2071	-315.03	-392			693	0	SLU 56	0	No
ini.	3	1973	-520.62	-1620			693	0	SLU 53	0	No
fin.	3	2052	-309.19	-393			693	0	SLU 53	0	No
ini.	3	1929	-504.01	-1614			693	0	SLU 55	0	No
fin.	3	2203	-361.87	-460			693	0	SLU 55	0	No
ini.	3	1954	-513.05	-1621			693	0	SLU 54	0	No
fin.	3	2147	-339.86	-430			693	0	SLU 54	0	No
ini.	3	1962	-516.39	-1647			693	0	SLU 57	0	No
fin.	3	2167	-345.7	-429			693	0	SLU 57	0	No

Verifiche a pressoflessione delle travi in muratura in combinazioni sismiche

Sezione	γM	N	M	Mu	Comb.	c.s.	Verifica
ini.	2	5126	-1141.49	1232.87	SLV 13	1.08	Si
fin.	2	2870	527.79	1232.87	SLV 13	2.34	Si
ini.	2	5126	-1141.49	1232.87	SLV 14	1.08	Si
fin.	2	2870	527.79	1232.87	SLV 14	2.34	Si
ini.	2	-2240	333.38	1232.87	SLV 3	3.7	Si
fin.	2	232	-985.89	1232.87	SLV 3	1.25	Si
ini.	2	4272	-989.87	1232.87	SLV 15	1.25	Si
fin.	2	2704	810.63	1232.87	SLV 15	1.52	Si
ini.	2	-2240	333.38	1232.87	SLV 4	3.7	Si
fin.	2	232	-985.89	1232.87	SLV 4	1.25	Si
ini.	2	1889	-458.26	1232.87	SLV 6	2.69	Si
fin.	2	1456	-969.94	1232.87	SLV 6	1.27	Si
ini.	2	1889	-458.26	1232.87	SLV 5	2.69	Si
fin.	2	1456	-969.94	1232.87	SLV 5	1.27	Si
ini.	2	4272	-989.87	1232.87	SLV 16	1.25	Si
fin.	2	2704	810.63	1232.87	SLV 16	1.52	Si
ini.	2	-1386	181.77	1232.87	SLV 2	6.78	Si
fin.	2	398	-1268.73	1232.87	SLV 2	0.97	No
ini.	2	-1386	181.77	1232.87	SLV 1	6.78	Si
fin.	2	398	-1268.73	1232.87	SLV 1	0.97	No

Verifiche a taglio delle travi in muratura secondo §C8.7.1.3.1 in combinazioni sismiche

Sezione	γM	N	M	V	Vt	Vp	Vt fess. diag.	Vt,lim	Comb.	c.s.	Verifica
ini.	2	3842	-855.24	-1566			1040	0	SLV 10	0	No
fin.	2	2197	-430.98	270			1040	0	SLV 10	0	No
ini.	2	1889	-458.26	-1644			1040	0	SLV 5	0	No
fin.	2	1456	-969.94	-601			1040	0	SLV 5	0	No
ini.	2	4272	-989.87	-963			1040	0	SLV 15	0	No
fin.	2	2704	810.63	1121			1040	0	SLV 15	0	No
ini.	2	1889	-458.26	-1644			1040	0	SLV 6	0	No
fin.	2	1456	-969.94	-601			1040	0	SLV 6	0	No
ini.	2	5126	-1141.49	-1199			1040	0	SLV 14	0	No
fin.	2	2870	527.79	1197			1040	0	SLV 14	0	No
ini.	2	3842	-855.24	-1566			1040	0	SLV 9	0	No
fin.	2	2197	-430.98	270			1040	0	SLV 9	0	No
ini.	2	998	-349.84	-777			1040	200	SLV 11	0.26	No
fin.	2	1646	511.83	15			1040	0	SLV 11	0	No
ini.	2	5126	-1141.49	-1199			1040	0	SLV 13	0	No
fin.	2	2870	527.79	1197			1040	0	SLV 13	0	No
ini.	2	4272	-989.87	-963			1040	0	SLV 16	0	No
fin.	2	2704	810.63	1121			1040	0	SLV 16	0	No
ini.	2	998	-349.84	-777			1040	200	SLV 12	0.26	No
fin.	2	1646	511.83	15			1040	0	SLV 12	0	No

Tabella dei coefficienti di sicurezza minimi

Stato limite	Coeff.s.	Comb.	Verifica
PF_SLV	0.972	SLV 1	No
V_SLV	0	SLV 5	No
PF_SLU	1.399	SLU 83	Si
V_SLU	0	SLU 1	No

Trave di accoppiamento 9

Verifiche condotte secondo D.M. 17-01-18 (N.T.C.)

Dati geometrici

X ini.	Y ini.	Z ini.inf.	Z ini.sup.	H ini.	X fin.	Y fin.	Z fin.inf.	Z fin.sup	H fin.	Luce	Spessore	R. Trazione
-17.834	6.483	-2.03	-0.03	2	-16.834	6.483	-2.03	-0.03	2	1	0.45	30000

Caratteristiche del materiale

(Circolare 7 21-01-19 C8.5.I) Muratura in mattoni pieni e malta di calce LC2_Corti

fb_	fhk	fvk0	fhmedio	τ0	fv0	μ	ϕ	fvk,lim	E	G	FC
120000			172500	9000	20000	0.577	0.767	6500	320000000	128000000	1.2

Verifiche a pressoflessione delle travi in muratura in combinazioni non sismiche

Sezione	γM	N	M	Mu	Comb.	c.s.	Verifica
ini.	3	-4180	-2882.05	9132.35	SLU 83	3.17	Si
fin.	3	-7329	-273.51	9132.35	SLU 83	33.39	Si
ini.	3	-4052	-2785.28	9132.35	SLU 74	3.28	Si
fin.	3	-7091	-263.35	9132.35	SLU 74	34.68	Si
ini.	3	-4049	-2813.08	9132.35	SLU 80	3.25	Si
fin.	3	-7130	-256.45	9132.35	SLU 80	35.61	Si
ini.	3	-4183	-2881.75	9132.35	SLU 84	3.17	Si
fin.	3	-7329	-274.89	9132.35	SLU 84	33.22	Si
ini.	3	-4047	-2813.38	9132.35	SLU 79	3.25	Si
fin.	3	-7129	-255.07	9132.35	SLU 79	35.8	Si
ini.	3	-4077	-2832.5	9132.35	SLU 78	3.22	Si
fin.	3	-7177	-256.55	9132.35	SLU 78	35.6	Si
ini.	3	-4158	-2834.53	9132.35	SLU 81	3.22	Si
fin.	3	-7243	-281.68	9132.35	SLU 81	32.42	Si
ini.	3	-4055	-2784.99	9132.35	SLU 75	3.28	Si
fin.	3	-7092	-264.73	9132.35	SLU 75	34.5	Si
ini.	3	-4160	-2834.24	9132.35	SLU 82	3.22	Si
fin.	3	-7244	-283.07	9132.35	SLU 82	32.26	Si
ini.	3	-4074	-2832.8	9132.35	SLU 77	3.22	Si
fin.	3	-7177	-255.17	9132.35	SLU 77	35.79	Si

Verifiche a taglio delle travi in muratura secondo §C8.7.1.3.1 in combinazioni non sismiche

Sezione	γM	N	M	V	Vt	Vp	Vt fess. diag.	Vt,lim	Comb.	c.s.	Verifica
ini.	3	-4047	-2813.38	1256			5085	1999	SLU 79	1.59	Si
fin.	3	-7129	-255.07	13905			6317	2397	SLU 79	0.17	No
ini.	3	-4160	-2834.24	1116			5130	2015	SLU 82	1.81	Si
fin.	3	-7244	-283.07	14118			6364	2410	SLU 82	0.17	No
ini.	3	-4077	-2832.5	1258			5097	2003	SLU 78	1.59	Si
fin.	3	-7177	-256.55	13996			6337	2402	SLU 78	0.17	No
ini.	3	-4074	-2832.8	1263			5096	2003	SLU 77	1.59	Si
fin.	3	-7177	-255.17	13997			6337	2402	SLU 77	0.17	No
ini.	3	-4055	-2784.99	1186			5088	2000	SLU 75	1.69	Si
fin.	3	-7092	-264.73	13796			6303	2392	SLU 75	0.17	No
ini.	3	-4180	-2882.05	1193			5138	2018	SLU 83	1.69	Si
fin.	3	-7329	-273.51	14319			6397	2420	SLU 83	0.17	No
ini.	3	-4049	-2813.08	1250			5086	1999	SLU 80	1.6	Si
fin.	3	-7130	-256.45	13904			6318	2397	SLU 80	0.17	No
ini.	3	-4183	-2881.75	1188			5139	2018	SLU 84	1.7	Si
fin.	3	-7329	-274.89	14318			6398	2420	SLU 84	0.17	No
ini.	3	-4158	-2834.53	1122			5129	2015	SLU 81	1.8	Si
fin.	3	-7243	-281.68	14119			6363	2410	SLU 81	0.17	No
ini.	3	-4052	-2785.28	1192			5087	2000	SLU 74	1.68	Si
fin.	3	-7091	-263.35	13796			6302	2392	SLU 74	0.17	No

Verifiche a pressoflessione delle travi in muratura in combinazioni sismiche

Sezione	γM	N	M	Mu	Comb.	c.s.	Verifica
ini.	2	-535	-7761.97	13698.53	SLV 4	1.76	Si
fin.	2	-11828	3269.54	13698.53	SLV 4	4.19	Si
ini.	2	-535	-7761.97	13698.53	SLV 3	1.76	Si
fin.	2	-11828	3269.54	13698.53	SLV 3	4.19	Si
ini.	2	-4150	-5661.8	13698.53	SLV 7	2.42	Si
fin.	2	-11800	2396.16	13698.53	SLV 7	5.72	Si
ini.	2	-1509	1855.08	13698.53	SLV 10	7.38	Si
fin.	2	2013	-2784.29	13698.53	SLV 10	4.92	Si
ini.	2	-5123	3955.24	13698.53	SLV 14	3.46	Si
fin.	2	2041	-3657.67	13698.53	SLV 14	3.75	Si
ini.	2	-5123	3955.24	13698.53	SLV 13	3.46	Si
fin.	2	2041	-3657.67	13698.53	SLV 13	3.75	Si
ini.	2	-1509	1855.08	13698.53	SLV 9	7.38	Si
fin.	2	2013	-2784.29	13698.53	SLV 9	4.92	Si
ini.	2	-4150	-5661.8	13698.53	SLV 8	2.42	Si
fin.	2	-11800	2396.16	13698.53	SLV 8	5.72	Si
ini.	2	789	-6442.72	13698.53	SLV 1	2.13	Si
fin.	2	-8646	2246.81	13698.53	SLV 1	6.1	Si
ini.	2	789	-6442.72	13698.53	SLV 2	2.13	Si
fin.	2	-8646	2246.81	13698.53	SLV 2	6.1	Si

Verifiche a taglio delle travi in muratura secondo §C8.7.1.3.1 in combinazioni sismiche

Sezione	γM	N	M	V	Vt	Vp	Vt fess. diag.	Vt,lim	Comb.	c.s.	Verifica
ini.	2	-5123	3955.24	-15146			7248	2861	SLV 13	0.19	No
fin.	2	2041	-3657.67	-9563			5199	1446	SLV 13	0.15	No
ini.	2	789	-6442.72	16843			5199	1777	SLV 2	0.11	No
fin.	2	-8646	2246.81	24598			8657	3344	SLV 2	0.14	No
ini.	2	-5123	3955.24	-15146			7248	2861	SLV 14	0.19	No
fin.	2	2041	-3657.67	-9563			5199	1446	SLV 14	0.15	No
ini.	2	-6448	2636	-15178			7778	3052	SLV 15	0.2	No
fin.	2	-1141	-2634.94	-5787			5656	2191	SLV 15	0.38	No
ini.	2	-6448	2636	-15178			7778	3052	SLV 16	0.2	No
fin.	2	-1141	-2634.94	-5787			5656	2191	SLV 16	0.38	No
ini.	2	-4150	-5661.8	5576			6859	2713	SLV 8	0.49	No
fin.	2	-11800	2396.16	20823			9919	3724	SLV 8	0.18	No
ini.	2	-4150	-5661.8	5576			6859	2713	SLV 7	0.49	No
fin.	2	-11800	2396.16	20823			9919	3724	SLV 7	0.18	No

Sezione	γM	N	M	V	Vt	Vp	Vt fess. diag.	Vt,lim	Comb.	c.s.	Verifica
ini.	2	-535	-7761.97	16810			5413	2070	SLV 3	0.12	No
fin.	2	-11828	3269.54	28374			9930	3727	SLV 3	0.13	No
ini.	2	789	-6442.72	16843			5199	1777	SLV 1	0.11	No
fin.	2	-8646	2246.81	24598			8657	3344	SLV 1	0.14	No
ini.	2	-535	-7761.97	16810			5413	2070	SLV 4	0.12	No
fin.	2	-11828	3269.54	28374			9930	3727	SLV 4	0.13	No

Tabella dei coefficienti di sicurezza minimi

Stato limite	Coeff.s.	Comb.	Verifica
PF_SLV	1.765	SLV 3	Si
V_SLV	0.105	SLV 1	No
PF_SLU	3.169	SLU 83	Si
V_SLU	0.169	SLU 83	No

Trave di accoppiamento 10

Verifiche condotte secondo D.M. 17-01-18 (N.T.C.)

Dati geometrici

X ini.	Y ini.	Z ini.inf.	Z ini.sup.	H ini.	X fin.	Y fin.	Z fin.inf.	Z fin.sup	H fin.	Luce	Spessore	R. Trazione
-17.834	6.483	0.37	0.67	0.3	-16.834	6.483	0.37	0.67	0.3	1	0.45	30000

Caratteristiche del materiale

(Circolare 7 21-01-19 C8.5.I) Muratura in mattoni pieni e malta di calce LC2_Corti

fb_	fhk	fvk0	fhmedio	τ0	fv0	μ	ϕ	fvk,lim	E	G	FC
120000			172500	9000	20000	0.577	0.767	6500	320000000	128000000	1.2

Verifiche a pressoflessione delle travi in muratura in combinazioni non sismiche

Sezione	γM	N	M	Mu	Comb.	c.s.	Verifica
ini.	3	50	-456.57	205.48	SLU 75	0.45	No
fin.	3	1242	-108.08	205.48	SLU 75	1.9	Si
ini.	3	31	-471.69	205.48	SLU 82	0.44	No
fin.	3	1229	-120.04	205.48	SLU 82	1.71	Si
ini.	3	40	-460.38	205.48	SLU 79	0.45	No
fin.	3	1260	-105.68	205.48	SLU 79	1.94	Si
ini.	3	46	-462.97	205.48	SLU 78	0.44	No
fin.	3	1273	-106	205.48	SLU 78	1.94	Si
ini.	3	42	-460.25	205.48	SLU 80	0.45	No
fin.	3	1260	-105.94	205.48	SLU 80	1.94	Si
ini.	3	48	-456.69	205.48	SLU 74	0.45	No
fin.	3	1242	-107.81	205.48	SLU 74	1.91	Si
ini.	3	26	-478.22	205.48	SLU 83	0.43	No
fin.	3	1260	-117.71	205.48	SLU 83	1.75	Si
ini.	3	44	-463.1	205.48	SLU 77	0.44	No
fin.	3	1273	-105.74	205.48	SLU 77	1.94	Si
ini.	3	28	-478.1	205.48	SLU 84	0.43	No
fin.	3	1260	-117.97	205.48	SLU 84	1.74	Si
ini.	3	29	-471.82	205.48	SLU 81	0.44	No
fin.	3	1229	-119.78	205.48	SLU 81	1.72	Si

Verifiche a taglio delle travi in muratura secondo §C8.7.1.3.1 in combinazioni non sismiche

Sezione	γM	N	M	V	Vt	Vp	Vt fess. diag.	Vt,lim	Comb.	c.s.	Verifica
ini.	3	55	-422.09	2191			347	122	SLU 61	0.06	No
fin.	3	1139	-103.62	-1089			347	0	SLU 61	0	No
ini.	3	79	-275.68	1425			347	118	SLU 1	0.08	No
fin.	3	821	-58.31	-672			347	0	SLU 1	0	No
ini.	3	66	-410.65	2117			347	121	SLU 59	0.06	No
fin.	3	1170	-89.52	-1009			347	0	SLU 59	0	No
ini.	3	73	-406.97	2103			347	119	SLU 54	0.06	No
fin.	3	1152	-91.66	-1013			347	0	SLU 54	0	No
ini.	3	70	-404.16	2090			347	120	SLU 55	0.06	No
fin.	3	1139	-91.77	-1010			347	0	SLU 55	0	No
ini.	3	64	-410.78	2117			347	121	SLU 58	0.06	No
fin.	3	1170	-89.26	-1008			347	0	SLU 58	0	No
ini.	3	71	-407.09	2103			347	120	SLU 53	0.06	No
fin.	3	1152	-91.4	-1012			347	0	SLU 53	0	No
ini.	3	53	-422.21	2191			347	123	SLU 60	0.06	No
fin.	3	1139	-103.36	-1088			347	0	SLU 60	0	No
ini.	3	68	-413.5	2130			347	120	SLU 56	0.06	No
fin.	3	1182	-89.32	-1011			347	0	SLU 56	0	No
ini.	3	70	-413.37	2130			347	120	SLU 57	0.06	No
fin.	3	1182	-89.59	-1012			347	0	SLU 57	0	No

Verifiche a pressoflessione delle travi in muratura in combinazioni sismiche

Sezione	γM	N	M	Mu	Comb.	c.s.	Verifica
ini.	2	365	-1139.15	308.22	SLV 11	0.27	No
fin.	2	4241	-518.3	308.22	SLV 11	0.59	No
ini.	2	3092	112.41	308.22	SLV 16	2.74	Si
fin.	2	-1165	-856.8	308.22	SLV 16	0.36	No
ini.	2	-3369	-1356.53	308.22	SLV 4	0.23	No
fin.	2	5526	577.4	308.22	SLV 4	0.53	No
ini.	2	3092	112.41	308.22	SLV 15	2.74	Si
fin.	2	-1165	-856.8	308.22	SLV 15	0.36	No
ini.	2	1695	967.79	308.22	SLV 9	0.32	No
fin.	2	-4514	-51.24	308.22	SLV 9	6.02	Si
ini.	2	-1573	-1579.83	308.22	SLV 8	0.2	No
fin.	2	6248	-88.04	308.22	SLV 8	3.5	Si

Sezione	γM	N	M	Mu	Comb.	c.s.	Verifica
ini.	2	1695	967.79	308.22	SLV 10	0.32	No
fin.	2	-4514	-51.24	308.22	SLV 10	6.02	Si
ini.	2	365	-1139.15	308.22	SLV 12	0.27	No
fin.	2	4241	-518.3	308.22	SLV 12	0.59	No
ini.	2	-1573	-1579.83	308.22	SLV 7	0.2	No
fin.	2	6248	-88.04	308.22	SLV 7	3.5	Si
ini.	2	-3369	-1356.53	308.22	SLV 3	0.23	No
fin.	2	5526	577.4	308.22	SLV 3	0.53	No

Verifiche a taglio delle travi in muratura secondo §C8.7.1.3.1 in combinazioni sismiche

Sezione	γM	N	M	V	Vt	Vp	Vt fess. diag.	Vt,lim	Comb.	c.s.	Verifica
ini.	2	-1573	-1579.83	3021			939	357	SLV 7	0.12	No
fin.	2	6248	-88.04	-433			520	0	SLV 7	0	No
ini.	2	1695	967.79	146			520	0	SLV 9	0	No
fin.	2	-4514	-51.24	-1098			1723	542	SLV 9	0.49	No
ini.	2	-3369	-1356.53	4363			1418	479	SLV 4	0.11	No
fin.	2	5526	577.4	1604			520	0	SLV 4	0	No
ini.	2	-2970	-724.45	3966			1312	455	SLV 1	0.11	No
fin.	2	2900	717.52	1853			520	0	SLV 1	0	No
ini.	2	365	-1139.15	1473			520	132	SLV 12	0.09	No
fin.	2	4241	-518.3	-1930			520	0	SLV 12	0	No
ini.	2	365	-1139.15	1473			520	132	SLV 11	0.09	No
fin.	2	4241	-518.3	-1930			520	0	SLV 11	0	No
ini.	2	-2970	-724.45	3966			1312	455	SLV 2	0.11	No
fin.	2	2900	717.52	1853			520	0	SLV 2	0	No
ini.	2	1695	967.79	146			520	0	SLV 10	0	No
fin.	2	-4514	-51.24	-1098			1723	542	SLV 10	0.49	No
ini.	2	-1573	-1579.83	3021			939	357	SLV 8	0.12	No
fin.	2	6248	-88.04	-433			520	0	SLV 8	0	No
ini.	2	-3369	-1356.53	4363			1418	479	SLV 3	0.11	No
fin.	2	5526	577.4	1604			520	0	SLV 3	0	No

Tabella dei coefficienti di sicurezza minimi

Stato limite	Coeff.s.	Comb.	Verifica
PF_SLV	0.195	SLV 7	No
V_SLV	0	SLV 1	No
PF_SLU	0.43	SLU 83	No
V_SLU	0	SLU 1	No

Trave di accoppiamento 11

Verifiche condotte secondo D.M. 17-01-18 (N.T.C.)

Dati geometrici

X ini.	Y ini.	Z ini.inf.	Z ini.sup.	H ini.	X fin.	Y fin.	Z fin.inf.	Z fin.sup	H fin.	Luce	Spessore	R. Trazione
-12.908	6.483	-2.03	-0.03	2	-11.908	6.483	-2.03	-0.03	2	1	0.45	30000

Caratteristiche del materiale

(Circolare 7 21-01-19 C8.5.I) Muratura in mattoni pieni e malta di calce LC2_Corti

fb_	fhk	fvk0	fhmedio	τ0	fv0	μ	ϕ	fvk,lim	E	G	FC
120000			172500	9000	20000	0.577	0.767	6500	320000000	128000000	1.2

Verifiche a pressoflessione delle travi in muratura in combinazioni non sismiche

Sezione	γM	N	M	Mu	Comb.	c.s.	Verifica
ini.	3	-6626	-243.9	9132.35	SLU 84	37.44	Si
fin.	3	-6808	-72.67	9132.35	SLU 84	125.67	Si
ini.	3	-6460	-249.04	9132.35	SLU 77	36.67	Si
fin.	3	-6646	-71.41	9132.35	SLU 77	127.88	Si
ini.	3	-6558	-237.26	9132.35	SLU 81	38.49	Si
fin.	3	-6732	-73.54	9132.35	SLU 81	124.19	Si
ini.	3	-6621	-245.34	9132.35	SLU 83	37.22	Si
fin.	3	-6804	-72.39	9132.35	SLU 83	126.16	Si
ini.	3	-6422	-248.27	9132.35	SLU 79	36.78	Si
fin.	3	-6606	-71.05	9132.35	SLU 79	128.53	Si
ini.	3	-6397	-240.97	9132.35	SLU 74	37.9	Si
fin.	3	-6574	-72.56	9132.35	SLU 74	125.86	Si
ini.	3	-6465	-247.61	9132.35	SLU 78	36.88	Si
fin.	3	-6650	-71.69	9132.35	SLU 78	127.38	Si
ini.	3	-6426	-246.83	9132.35	SLU 80	37	Si
fin.	3	-6610	-71.33	9132.35	SLU 80	128.02	Si
ini.	3	-6366	-237.8	9132.35	SLU 76	38.4	Si
fin.	3	-6541	-72.67	9132.35	SLU 76	125.66	Si
ini.	3	-6402	-239.53	9132.35	SLU 75	38.13	Si
fin.	3	-6578	-72.85	9132.35	SLU 75	125.37	Si

Verifiche a taglio delle travi in muratura secondo §C8.7.1.3.1 in combinazioni non sismiche

Sezione	γM	N	M	V	Vt	Vp	Vt fess. diag.	Vt,lim	Comb.	c.s.	Verifica
ini.	3	-6626	-243.9	-3741			6116	2336	SLU 84	0.62	No
fin.	3	-6808	-72.67	4739			6189	2358	SLU 84	0.5	No
ini.	3	-6558	-237.26	-3702			6089	2328	SLU 81	0.63	No
fin.	3	-6732	-73.54	4666			6159	2349	SLU 81	0.5	No
ini.	3	-6621	-245.34	-3737			6114	2336	SLU 83	0.63	No
fin.	3	-6804	-72.39	4739			6187	2358	SLU 83	0.5	No
ini.	3	-6426	-246.83	-3591			6036	2312	SLU 80	0.64	No
fin.	3	-6610	-71.33	4592			6110	2335	SLU 80	0.51	No
ini.	3	-6402	-239.53	-3583			6027	2309	SLU 75	0.64	No
fin.	3	-6578	-72.85	4549			6097	2331	SLU 75	0.51	No

Sezione	γM	N	M	V	Vt	Vp	Vt fess. diag.	Vt,lim	Comb.	c.s.	Verifica
ini.	3	-6397	-240.97	-3578			6025	2308	SLU 74	0.65	No
fin.	3	-6574	-72.56	4549			6096	2330	SLU 74	0.51	No
ini.	3	-6562	-235.83	-3706			6091	2329	SLU 82	0.63	No
fin.	3	-6736	-73.82	4665			6160	2350	SLU 82	0.5	No
ini.	3	-6465	-247.61	-3618			6052	2317	SLU 78	0.64	No
fin.	3	-6650	-71.69	4622			6126	2339	SLU 78	0.51	No
ini.	3	-6422	-248.27	-3587			6035	2312	SLU 79	0.64	No
fin.	3	-6606	-71.05	4592			6108	2334	SLU 79	0.51	No
ini.	3	-6460	-249.04	-3614			6050	2316	SLU 77	0.64	No
fin.	3	-6646	-71.41	4622			6124	2339	SLU 77	0.51	No

Verifiche a pressoflessione delle travi in muratura in combinazioni sismiche

Sezione	γM	N	M	Mu	Comb.	c.s.	Verifica
ini.	2	-417	-5322.02	13698.53	SLV 2	2.57	Si
fin.	2	-6789	4304.39	13698.53	SLV 2	3.18	Si
ini.	2	-762	46.89	13698.53	SLV 9	292.13	Si
fin.	2	1319	-3095.06	13698.53	SLV 9	4.43	Si
ini.	2	-3093	-4590.49	13698.53	SLV 3	2.98	Si
fin.	2	-9644	5256.92	13698.53	SLV 3	2.61	Si
ini.	2	-8427	4982.39	13698.53	SLV 16	2.75	Si
fin.	2	-2293	-4417.18	13698.53	SLV 16	3.1	Si
ini.	2	-3093	-4590.49	13698.53	SLV 4	2.98	Si
fin.	2	-9644	5256.92	13698.53	SLV 4	2.61	Si
ini.	2	-5751	4250.86	13698.53	SLV 13	3.22	Si
fin.	2	561	-5369.71	13698.53	SLV 13	2.55	Si
ini.	2	-762	46.89	13698.53	SLV 10	292.13	Si
fin.	2	1319	-3095.06	13698.53	SLV 10	4.43	Si
ini.	2	-417	-5322.02	13698.53	SLV 1	2.57	Si
fin.	2	-6789	4304.39	13698.53	SLV 1	3.18	Si
ini.	2	-8427	4982.39	13698.53	SLV 15	2.75	Si
fin.	2	-2293	-4417.18	13698.53	SLV 15	3.1	Si
ini.	2	-5751	4250.86	13698.53	SLV 14	3.22	Si
fin.	2	561	-5369.71	13698.53	SLV 14	2.55	Si

Verifiche a taglio delle travi in muratura secondo §C8.7.1.3.1 in combinazioni sismiche

Sezione	γM	N	M	V	Vt	Vp	Vt fess. diag.	Vt,lim	Comb.	c.s.	Verifica
ini.	2	-8082	-386.52	1236			8432	3272	SLV 8	2.65	Si
fin.	2	-10401	2982.27	10552			9359	3560	SLV 8	0.34	No
ini.	2	-3093	-4590.49	12976			6436	2542	SLV 3	0.2	No
fin.	2	-9644	5256.92	19740			9056	3469	SLV 3	0.18	No
ini.	2	-5751	4250.86	-17797			7499	2953	SLV 13	0.17	No
fin.	2	561	-5369.71	-13606			5199	1831	SLV 13	0.13	No
ini.	2	-8427	4982.39	-18437			8570	3316	SLV 15	0.18	No
fin.	2	-2293	-4417.18	-11968			6116	2404	SLV 15	0.2	No
ini.	2	-417	-5322.02	13616			5366	2045	SLV 1	0.15	No
fin.	2	-6789	4304.39	18103			7915	3099	SLV 1	0.17	No
ini.	2	-3093	-4590.49	12976			6436	2542	SLV 4	0.2	No
fin.	2	-9644	5256.92	19740			9056	3469	SLV 4	0.18	No
ini.	2	-8082	-386.52	1236			8432	3272	SLV 7	2.65	Si
fin.	2	-10401	2982.27	10552			9359	3560	SLV 7	0.34	No
ini.	2	-8427	4982.39	-18437			8570	3316	SLV 16	0.18	No
fin.	2	-2293	-4417.18	-11968			6116	2404	SLV 16	0.2	No
ini.	2	-417	-5322.02	13616			5366	2045	SLV 2	0.15	No
fin.	2	-6789	4304.39	18103			7915	3099	SLV 2	0.17	No
ini.	2	-5751	4250.86	-17797			7499	2953	SLV 14	0.17	No
fin.	2	561	-5369.71	-13606			5199	1831	SLV 14	0.13	No

Tabella dei coefficienti di sicurezza minimi

Stato limite	Coeff.s.	Comb.	Verifica
PF_SLV	2.551	SLV 13	Si
V_SLV	0.135	SLV 13	No
PF_SLU	36.67	SLU 77	Si
V_SLU	0.498	SLU 83	No

Trave di accoppiamento 12

Verifiche condotte secondo D.M. 17-01-18 (N.T.C.)

Dati geometrici

X ini.	Y ini.	Z ini.inf.	Z ini.sup.	H ini.	X fin.	Y fin.	Z fin.inf.	Z fin.sup	H fin.	Luce	Spessore	R. Trazione
-12.908	6.483	0.37	0.67	0.3	-11.908	6.483	0.37	0.67	0.3	1	0.45	30000

Caratteristiche del materiale

(Circolare 7 21-01-19 C8.5.I) Muratura in mattoni pieni e malta di calce LC2_Corti

fb_	fhk	fvk0	fhmedio	τ0	fv0	μ	ϕ	fvk,lim	E	G	FC
120000			172500	9000	20000	0.577	0.767	6500	320000000	128000000	1.2

Verifiche a pressoflessione delle travi in muratura in combinazioni non sismiche

Sezione	γM	N	M	Mu	Comb.	c.s.	Verifica
ini.	3	-334	-276.89	205.48	SLU 82	0.74	No
fin.	3	-285	-266.87	205.48	SLU 82	0.77	No
ini.	3	-333	-280.06	205.48	SLU 84	0.73	No
fin.	3	-280	-269.1	205.48	SLU 84	0.76	No
ini.	3	-308	-270.47	205.48	SLU 78	0.76	No
fin.	3	-252	-258.85	205.48	SLU 78	0.79	No
ini.	3	-308	-269.05	205.48	SLU 80	0.76	No
fin.	3	-253	-257.43	205.48	SLU 80	0.8	No

Sezione	γM	N	M	Mu	Comb.	c.s.	Verifica
ini.	3	-308	-270.52	205.48	SLU 77	0.76	No
fin.	3	-251	-258.63	205.48	SLU 77	0.79	No
ini.	3	-333	-280.11	205.48	SLU 83	0.73	No
fin.	3	-279	-268.88	205.48	SLU 83	0.76	No
ini.	3	-308	-269.1	205.48	SLU 79	0.76	No
fin.	3	-251	-257.21	205.48	SLU 79	0.8	No
ini.	3	-334	-276.94	205.48	SLU 81	0.74	No
fin.	3	-284	-266.65	205.48	SLU 81	0.77	No
ini.	3	-309	-267.3	205.48	SLU 75	0.77	No
fin.	3	-257	-256.61	205.48	SLU 75	0.8	No
ini.	3	-309	-267.35	205.48	SLU 74	0.77	No
fin.	3	-256	-256.39	205.48	SLU 74	0.8	No

Verifiche a taglio delle travi in muratura secondo §C8.7.1.3.1 in combinazioni non sismiche

Sezione	γM	N	M	V	Vt	Vp	Vt fess. diag.	Vt,lim	Comb.	c.s.	Verifica
ini.	3	-308	-270.47	1606			429	169	SLU 78	0.11	No
fin.	3	-252	-258.85	-1564			414	163	SLU 78	0.1	No
ini.	3	-308	-270.52	1606			429	169	SLU 77	0.11	No
fin.	3	-251	-258.63	-1563			414	163	SLU 77	0.1	No
ini.	3	-334	-276.94	1646			436	172	SLU 81	0.1	No
fin.	3	-284	-266.65	-1608			422	167	SLU 81	0.1	No
ini.	3	-308	-269.05	1598			429	169	SLU 80	0.11	No
fin.	3	-253	-257.43	-1556			414	163	SLU 80	0.1	No
ini.	3	-333	-280.11	1663			436	172	SLU 83	0.1	No
fin.	3	-279	-268.88	-1622			421	166	SLU 83	0.1	No
ini.	3	-309	-267.35	1589			429	169	SLU 74	0.11	No
fin.	3	-256	-256.39	-1549			415	163	SLU 74	0.11	No
ini.	3	-333	-280.06	1663			436	172	SLU 84	0.1	No
fin.	3	-280	-269.1	-1623			421	166	SLU 84	0.1	No
ini.	3	-308	-269.1	1598			429	169	SLU 79	0.11	No
fin.	3	-251	-257.21	-1555			414	163	SLU 79	0.1	No
ini.	3	-309	-267.3	1589			429	169	SLU 75	0.11	No
fin.	3	-257	-256.61	-1550			415	164	SLU 75	0.11	No
ini.	3	-334	-276.89	1646			436	172	SLU 82	0.1	No
fin.	3	-285	-266.87	-1609			423	167	SLU 82	0.1	No

Verifiche a pressoflessione delle travi in muratura in combinazioni sismiche

Sezione	γM	N	M	Mu	Comb.	c.s.	Verifica
ini.	2	-1800	303.69	308.22	SLV 6	1.01	Si
fin.	2	122	727.09	308.22	SLV 6	0.42	No
ini.	2	1398	-663.3	308.22	SLV 12	0.46	No
fin.	2	-455	-1072.39	308.22	SLV 12	0.29	No
ini.	2	3247	287.76	308.22	SLV 15	1.07	Si
fin.	2	-2971	-1058.07	308.22	SLV 15	0.29	No
ini.	2	-559	-1067.22	308.22	SLV 8	0.29	No
fin.	2	1337	-666.56	308.22	SLV 8	0.46	No
ini.	2	1398	-663.3	308.22	SLV 11	0.46	No
fin.	2	-455	-1072.39	308.22	SLV 11	0.29	No
ini.	2	3247	287.76	308.22	SLV 16	1.07	Si
fin.	2	-2971	-1058.07	308.22	SLV 16	0.29	No
ini.	2	-3277	-1058.64	308.22	SLV 3	0.29	No
fin.	2	3002	294.68	308.22	SLV 3	1.05	Si
ini.	2	-3277	-1058.64	308.22	SLV 4	0.29	No
fin.	2	3002	294.68	308.22	SLV 4	1.05	Si
ini.	2	-1800	303.69	308.22	SLV 5	1.01	Si
fin.	2	122	727.09	308.22	SLV 5	0.42	No
ini.	2	-559	-1067.22	308.22	SLV 7	0.29	No
fin.	2	1337	-666.56	308.22	SLV 7	0.46	No

Verifiche a taglio delle travi in muratura secondo §C8.7.1.3.1 in combinazioni sismiche

Sezione	γM	N	M	V	Vt	Vp	Vt fess. diag.	Vt,lim	Comb.	c.s.	Verifica
ini.	2	-559	-1067.22	2339			669	265	SLV 7	0.11	No
fin.	2	1337	-666.56	-851			520	0	SLV 7	0	No
ini.	2	2875	699.03	-1467			520	0	SLV 14	0	No
fin.	2	-3336	-639.98	-3298			1409	477	SLV 14	0.14	No
ini.	2	-559	-1067.22	2339			669	265	SLV 8	0.11	No
fin.	2	1337	-666.56	-851			520	0	SLV 8	0	No
ini.	2	-3649	-647.36	3282			1493	495	SLV 1	0.15	No
fin.	2	2638	712.78	1519			520	0	SLV 1	0	No
ini.	2	1398	-663.3	914			520	0	SLV 12	0	No
fin.	2	-455	-1072.39	-2296			641	253	SLV 12	0.11	No
ini.	2	-3277	-1058.64	3614			1394	473	SLV 3	0.13	No
fin.	2	3002	294.68	1204			520	0	SLV 3	0	No
ini.	2	-3277	-1058.64	3614			1394	473	SLV 4	0.13	No
fin.	2	3002	294.68	1204			520	0	SLV 4	0	No
ini.	2	1398	-663.3	914			520	0	SLV 11	0	No
fin.	2	-455	-1072.39	-2296			641	253	SLV 11	0.11	No
ini.	2	-3649	-647.36	3282			1493	495	SLV 2	0.15	No
fin.	2	2638	712.78	1519			520	0	SLV 2	0	No
ini.	2	2875	699.03	-1467			520	0	SLV 13	0	No
fin.	2	-3336	-639.98	-3298			1409	477	SLV 13	0.14	No

Tabella dei coefficienti di sicurezza minimi

Stato limite	Coeff.s.	Comb.	Verifica
PF_SLV	0.287	SLV 11	No
V_SLV	0	SLV 1	No
PF_SLU	0.734	SLU 83	No
V_SLU	0.102	SLU 83	No

Trave di accoppiamento 13

Verifiche condotte secondo D.M. 17-01-18 (N.T.C.)

Dati geometrici

X ini.	Y ini.	Z ini.inf.	Z ini.sup.	H ini.	X fin.	Y fin.	Z fin.inf.	Z fin.sup	H fin.	Luce	Spessore	R. Trazione
-7.985	6.483	-2.03	-0.03	2	-6.985	6.483	-2.03	-0.03	2	1	0.45	30000

Caratteristiche del materiale

(Circolare 7 21-01-19 C8.5.I) Muratura in mattoni pieni e malta di calce LC2_Corti

fb_	fhk	fvk0	fhmedio	τ0	fv0	μ	ϕ	fvk,lim	E	G	FC
120000			172500	9000	20000	0.577	0.767	6500	320000000	128000000	1.2

Verifiche a pressoflessione delle travi in muratura in combinazioni non sismiche

Sezione	γM	N	M	Mu	Comb.	c.s.	Verifica
ini.	3	-6825	169.59	9132.35	SLU 84	53.85	Si
fin.	3	-3188	-1992.47	9132.35	SLU 84	4.58	Si
ini.	3	-6739	162.6	9132.35	SLU 81	56.17	Si
fin.	3	-3153	-1963.87	9132.35	SLU 81	4.65	Si
ini.	3	-6604	167.64	9132.35	SLU 75	54.48	Si
fin.	3	-3093	-1917.74	9132.35	SLU 75	4.76	Si
ini.	3	-6639	169.85	9132.35	SLU 80	53.77	Si
fin.	3	-3105	-1933.78	9132.35	SLU 80	4.72	Si
ini.	3	-6683	174.37	9132.35	SLU 78	52.37	Si
fin.	3	-3122	-1946.86	9132.35	SLU 78	4.69	Si
ini.	3	-6745	162.86	9132.35	SLU 82	56.07	Si
fin.	3	-3159	-1963.34	9132.35	SLU 82	4.65	Si
ini.	3	-6633	169.58	9132.35	SLU 79	53.85	Si
fin.	3	-3099	-1934.31	9132.35	SLU 79	4.72	Si
ini.	3	-6677	174.1	9132.35	SLU 77	52.45	Si
fin.	3	-3116	-1947.39	9132.35	SLU 77	4.69	Si
ini.	3	-6598	167.38	9132.35	SLU 74	54.56	Si
fin.	3	-3087	-1918.27	9132.35	SLU 74	4.76	Si
ini.	3	-6818	169.32	9132.35	SLU 83	53.93	Si
fin.	3	-3182	-1993	9132.35	SLU 83	4.58	Si

Verifiche a taglio delle travi in muratura secondo §C8.7.1.3.1 in combinazioni non sismiche

Sezione	γM	N	M	V	Vt	Vp	Vt fess. diag.	Vt,lim	Comb.	c.s.	Verifica
ini.	3	-6818	169.32	-13072			6193	2360	SLU 83	0.18	No
fin.	3	-3182	-1993	-270			4739	1872	SLU 83	6.93	Si
ini.	3	-6598	167.38	-12587			6105	2333	SLU 74	0.19	No
fin.	3	-3087	-1918.27	-305			4701	1858	SLU 74	6.09	Si
ini.	3	-6825	169.59	-13078			6196	2360	SLU 84	0.18	No
fin.	3	-3188	-1992.47	-265			4741	1873	SLU 84	7.07	Si
ini.	3	-6604	167.64	-12593			6108	2334	SLU 75	0.19	No
fin.	3	-3093	-1917.74	-300			4703	1859	SLU 75	6.2	Si
ini.	3	-6633	169.58	-12669			6119	2337	SLU 79	0.18	No
fin.	3	-3099	-1934.31	-314			4706	1860	SLU 79	5.92	Si
ini.	3	-6745	162.86	-12911			6164	2351	SLU 82	0.18	No
fin.	3	-3159	-1963.34	-246			4730	1869	SLU 82	7.61	Si
ini.	3	-6683	174.37	-12761			6139	2343	SLU 78	0.18	No
fin.	3	-3122	-1946.86	-319			4715	1863	SLU 78	5.84	Si
ini.	3	-6677	174.1	-12754			6137	2343	SLU 77	0.18	No
fin.	3	-3116	-1947.39	-324			4713	1862	SLU 77	5.74	Si
ini.	3	-6739	162.6	-12904			6161	2350	SLU 81	0.18	No
fin.	3	-3153	-1963.87	-251			4727	1868	SLU 81	7.45	Si
ini.	3	-6639	169.85	-12675			6122	2338	SLU 80	0.18	No
fin.	3	-3105	-1933.78	-309			4708	1861	SLU 80	6.02	Si

Verifiche a pressoflessione delle travi in muratura in combinazioni sismiche

Sezione	γM	N	M	Mu	Comb.	c.s.	Verifica
ini.	2	-6	-1388.55	13698.53	SLV 9	9.87	Si
fin.	2	5084	-5828.83	13698.53	SLV 9	2.35	Si
ini.	2	-7318	2426.47	13698.53	SLV 13	5.65	Si
fin.	2	3314	-7967.34	13698.53	SLV 13	1.72	Si
ini.	2	1755	-3656.03	13698.53	SLV 2	3.75	Si
fin.	2	-3939	3695.36	13698.53	SLV 2	3.71	Si
ini.	2	-1791	-2210.76	13698.53	SLV 4	6.2	Si
fin.	2	-7632	5361.16	13698.53	SLV 4	2.56	Si
ini.	2	-10864	3871.74	13698.53	SLV 16	3.54	Si
fin.	2	-379	-6301.54	13698.53	SLV 16	2.17	Si
ini.	2	-7318	2426.47	13698.53	SLV 14	5.65	Si
fin.	2	3314	-7967.34	13698.53	SLV 14	1.72	Si
ini.	2	-6	-1388.55	13698.53	SLV 10	9.87	Si
fin.	2	5084	-5828.83	13698.53	SLV 10	2.35	Si
ini.	2	-1791	-2210.76	13698.53	SLV 3	6.2	Si
fin.	2	-7632	5361.16	13698.53	SLV 3	2.56	Si
ini.	2	1755	-3656.03	13698.53	SLV 1	3.75	Si
fin.	2	-3939	3695.36	13698.53	SLV 1	3.71	Si
ini.	2	-10864	3871.74	13698.53	SLV 15	3.54	Si
fin.	2	-379	-6301.54	13698.53	SLV 15	2.17	Si

Verifiche a taglio delle travi in muratura secondo §C8.7.1.3.1 in combinazioni sismiche

Sezione	γM	N	M	V	Vt	Vp	Vt fess. diag.	Vt,lim	Comb.	c.s.	Verifica
ini.	2	-6	-1388.55	-9844			5202	1958	SLV 9	0.2	No
fin.	2	5084	-5828.83	-6491			5199	0	SLV 9	0	No
ini.	2	-7318	2426.47	-25200			8126	3171	SLV 14	0.13	No
fin.	2	3314	-7967.34	-16375			5199	1005	SLV 14	0.06	No
ini.	2	-10864	3871.74	-27652			9544	3615	SLV 16	0.13	No
fin.	2	-379	-6301.54	-15446			5351	2037	SLV 16	0.13	No

Sezione	γM	N	M	V	Vt	Vp	Vt fess. diag.	Vt,lim	Comb.	c.s.	Verifica
ini.	2	1755	-3656.03	10501			5199	1528	SLV 1	0.15	No
fin.	2	-3939	3695.36	14957			6774	2679	SLV 1	0.18	No
ini.	2	-1791	-2210.76	8049			5915	2313	SLV 4	0.29	No
fin.	2	-7632	5361.16	15885			8252	3212	SLV 4	0.2	No
ini.	2	-1791	-2210.76	8049			5915	2313	SLV 3	0.29	No
fin.	2	-7632	5361.16	15885			8252	3212	SLV 3	0.2	No
ini.	2	-6	-1388.55	-9844			5202	1958	SLV 10	0.2	No
fin.	2	5084	-5828.83	-6491			5199	0	SLV 10	0	No
ini.	2	-10864	3871.74	-27652			9544	3615	SLV 15	0.13	No
fin.	2	-379	-6301.54	-15446			5351	2037	SLV 15	0.13	No
ini.	2	1755	-3656.03	10501			5199	1528	SLV 2	0.15	No
fin.	2	-3939	3695.36	14957			6774	2679	SLV 2	0.18	No
ini.	2	-7318	2426.47	-25200			8126	3171	SLV 13	0.13	No
fin.	2	3314	-7967.34	-16375			5199	1005	SLV 13	0.06	No

Tabella dei coefficienti di sicurezza minimi

Stato limite	Coeff.s.	Comb.	Verifica
PF_SLV	1.719	SLV 13	Si
V_SLV	0	SLV 9	No
PF_SLU	4.582	SLU 83	Si
V_SLU	0.18	SLU 84	No

Trave di accoppiamento 14

Verifiche condotte secondo D.M. 17-01-18 (N.T.C.)

Dati geometrici

X ini.	Y ini.	Z ini.inf.	Z ini.sup.	H ini.	X fin.	Y fin.	Z fin.inf.	Z fin.sup	H fin.	Luce	Spessore	R. Trazione
-7.985	6.483	0.37	0.67	0.3	-6.985	6.483	0.37	0.67	0.3	1	0.45	30000

Caratteristiche del materiale

(Circolare 7 21-01-19 C8.5.I) Muratura in mattoni pieni e malta di calce LC2_Corti

fb_	fhk	fvk0	fhmedio	τ0	fv0	μ	ϕ	fvk,lim	E	G	FC
120000			172500	9000	20000	0.577	0.767	6500	320000000	128000000	1.2

Verifiche a pressoflessione delle travi in muratura in combinazioni non sismiche

Sezione	γM	N	M	Mu	Comb.	c.s.	Verifica
ini.	3	533	-129.01	205.48	SLU 80	1.59	Si
fin.	3	-618	-436.51	205.48	SLU 80	0.47	No
ini.	3	541	-128.78	205.48	SLU 77	1.6	Si
fin.	3	-620	-438.9	205.48	SLU 77	0.47	No
ini.	3	540	-128.98	205.48	SLU 78	1.59	Si
fin.	3	-621	-439.13	205.48	SLU 78	0.47	No
ini.	3	522	-129.14	205.48	SLU 75	1.59	Si
fin.	3	-616	-433.72	205.48	SLU 75	0.47	No
ini.	3	524	-139.46	205.48	SLU 83	1.47	Si
fin.	3	-652	-454.47	205.48	SLU 83	0.45	No
ini.	3	534	-128.81	205.48	SLU 79	1.6	Si
fin.	3	-617	-436.29	205.48	SLU 79	0.47	No
ini.	3	507	-139.62	205.48	SLU 81	1.47	Si
fin.	3	-648	-449.06	205.48	SLU 81	0.46	No
ini.	3	524	-128.94	205.48	SLU 74	1.59	Si
fin.	3	-615	-433.49	205.48	SLU 74	0.47	No
ini.	3	523	-139.66	205.48	SLU 84	1.47	Si
fin.	3	-653	-454.7	205.48	SLU 84	0.45	No
ini.	3	505	-139.82	205.48	SLU 82	1.47	Si
fin.	3	-648	-449.29	205.48	SLU 82	0.46	No

Verifiche a taglio delle travi in muratura secondo §C8.7.1.3.1 in combinazioni non sismiche

Sezione	γM	N	M	V	Vt	Vp	Vt fess. diag.	Vt,lim	Comb.	c.s.	Verifica
ini.	3	510	-110.58	1051			347	0	SLU 56	0	No
fin.	3	-542	-391.15	-2076			491	194	SLU 56	0.09	No
ini.	3	509	-110.78	1052			347	0	SLU 57	0	No
fin.	3	-543	-391.37	-2077			491	194	SLU 57	0.09	No
ini.	3	523	-139.66	1269			347	0	SLU 84	0	No
fin.	3	-653	-454.7	-2417			521	204	SLU 84	0.08	No
ini.	3	503	-110.62	1048			347	0	SLU 58	0	No
fin.	3	-539	-388.53	-2063			490	193	SLU 58	0.09	No
ini.	3	475	-86.48	861			347	0	SLU 46	0	No
fin.	3	-444	-330.91	-1757			465	184	SLU 46	0.1	No
ini.	3	475	-121.62	1117			347	0	SLU 61	0	No
fin.	3	-570	-401.53	-2139			499	196	SLU 61	0.09	No
ini.	3	492	-110.94	1046			347	0	SLU 54	0	No
fin.	3	-538	-385.96	-2051			490	193	SLU 54	0.09	No
ini.	3	484	-111.11	1044			347	0	SLU 55	0	No
fin.	3	-535	-383.5	-2040			489	193	SLU 55	0.09	No
ini.	3	493	-110.74	1045			347	0	SLU 53	0	No
fin.	3	-537	-385.74	-2050			490	193	SLU 53	0.09	No
ini.	3	502	-110.81	1049			347	0	SLU 59	0	No
fin.	3	-540	-388.76	-2065			491	193	SLU 59	0.09	No

Verifiche a pressoflessione delle travi in muratura in combinazioni sismiche

Sezione	γM	N	M	Mu	Comb.	c.s.	Verifica
ini.	2	-5387	-779.92	308.22	SLV 4	0.4	No
fin.	2	-788	404.83	308.22	SLV 4	0.76	No
ini.	2	-2318	-983.88	308.22	SLV 1	0.31	No
fin.	2	4240	519.59	308.22	SLV 1	0.59	No

Sezione	γM	N	M	Mu	Comb.	c.s.	Verifica
ini.	2	6126	612.91	308.22	SLV 13	0.5	No
fin.	2	-21	-985.17	308.22	SLV 13	0.31	No
ini.	2	6126	612.91	308.22	SLV 14	0.5	No
fin.	2	-21	-985.17	308.22	SLV 14	0.31	No
ini.	2	-3479	495.93	308.22	SLV 12	0.62	No
fin.	2	-9424	-707.16	308.22	SLV 12	0.44	No
ini.	2	-5387	-779.92	308.22	SLV 3	0.4	No
fin.	2	-788	404.83	308.22	SLV 3	0.76	No
ini.	2	-3479	495.93	308.22	SLV 11	0.62	No
fin.	2	-9424	-707.16	308.22	SLV 11	0.44	No
ini.	2	3057	816.86	308.22	SLV 15	0.38	No
fin.	2	-5049	-1099.94	308.22	SLV 15	0.28	No
ini.	2	-2318	-983.88	308.22	SLV 2	0.31	No
fin.	2	4240	519.59	308.22	SLV 2	0.59	No
ini.	2	3057	816.86	308.22	SLV 16	0.38	No
fin.	2	-5049	-1099.94	308.22	SLV 16	0.28	No

Verifiche a taglio delle travi in muratura secondo §C8.7.1.3.1 in combinazioni sismiche

Sezione	γM	N	M	V	Vt	Vp	Vt fess. diag.	Vt,lim	Comb.	c.s.	Verifica
ini.	2	6126	612.91	-1908			520	0	SLV 13	0	No
fin.	2	-21	-985.17	-4119			526	199	SLV 13	0.05	No
ini.	2	6751	-183.91	-450			520	0	SLV 9	0	No
fin.	2	7337	-324.61	-1920			520	0	SLV 9	0	No
ini.	2	6126	612.91	-1908			520	0	SLV 14	0	No
fin.	2	-21	-985.17	-4119			526	199	SLV 14	0.05	No
ini.	2	4218	-662.95	1082			520	0	SLV 6	0	No
fin.	2	8615	126.82	-297			520	0	SLV 6	0	No
ini.	2	-2318	-983.88	3200			1138	412	SLV 2	0.13	No
fin.	2	4240	519.59	1293			520	0	SLV 2	0	No
ini.	2	3057	816.86	-1625			520	0	SLV 16	0	No
fin.	2	-5049	-1099.94	-4380			1866	570	SLV 16	0.13	No
ini.	2	4218	-662.95	1082			520	0	SLV 5	0	No
fin.	2	8615	126.82	-297			520	0	SLV 5	0	No
ini.	2	-2318	-983.88	3200			1138	412	SLV 1	0.13	No
fin.	2	4240	519.59	1293			520	0	SLV 1	0	No
ini.	2	3057	816.86	-1625			520	0	SLV 15	0	No
fin.	2	-5049	-1099.94	-4380			1866	570	SLV 15	0.13	No
ini.	2	6751	-183.91	-450			520	0	SLV 10	0	No
fin.	2	7337	-324.61	-1920			520	0	SLV 10	0	No

Tabella dei coefficienti di sicurezza minimi

Stato limite	Coeff.s.	Comb.	Verifica
PF_SLV	0.28	SLV 15	No
V_SLV	0	SLV 1	No
PF_SLU	0.452	SLU 84	No
V_SLU	0	SLU 43	No

Trave di accoppiamento 15

Verifiche condotte secondo D.M. 17-01-18 (N.T.C.)

Dati geometrici

X ini.	Y ini.	Z ini.inf.	Z ini.sup.	H ini.	X fin.	Y fin.	Z fin.inf.	Z fin.sup	H fin.	Luce	Spessore	R. Trazione
-18.638	1.046	0.07	0.67	0.6	-19.638	1.046	0.07	0.67	0.6	1	0.45	30000

Caratteristiche del materiale

(Circolare 7 21-01-19 C8.5.I) Muratura in mattoni pieni e malta di calce LC2_Corti

fb_	fhk	fvk0	fhmedio	τ0	fv0	μ	ϕ	fvk,lim	E	G	FC
120000			172500	9000	20000	0.577	0.767	6500	320000000	128000000	1.2

Verifiche a pressoflessione delle travi in muratura in combinazioni non sismiche

Sezione	γM	N	M	Mu	Comb.	c.s.	Verifica
ini.	3	-3830	-814.85	821.91	SLU 84	1.01	Si
fin.	3	-3149	-346.58	821.91	SLU 84	2.37	Si
ini.	3	-3634	-749.62	821.91	SLU 79	1.1	Si
fin.	3	-3080	-367.13	821.91	SLU 79	2.24	Si
ini.	3	-3662	-780.48	821.91	SLU 75	1.05	Si
fin.	3	-3014	-323.35	821.91	SLU 75	2.54	Si
ini.	3	-3738	-762.25	821.91	SLU 81	1.08	Si
fin.	3	-3176	-393.46	821.91	SLU 81	2.09	Si
ini.	3	-3692	-792.32	821.91	SLU 80	1.04	Si
fin.	3	-3025	-317.52	821.91	SLU 80	2.59	Si
ini.	3	-3796	-804.95	821.91	SLU 82	1.02	Si
fin.	3	-3120	-343.86	821.91	SLU 82	2.39	Si
ini.	3	-3697	-810.89	821.91	SLU 76	1.01	Si
fin.	3	-2958	-281.73	821.91	SLU 76	2.92	Si
ini.	3	-3663	-801	821.91	SLU 73	1.03	Si
fin.	3	-2929	-279.01	821.91	SLU 73	2.95	Si
ini.	3	-3772	-772.15	821.91	SLU 83	1.06	Si
fin.	3	-3205	-396.19	821.91	SLU 83	2.07	Si
ini.	3	-3696	-790.37	821.91	SLU 78	1.04	Si
fin.	3	-3043	-326.07	821.91	SLU 78	2.52	Si

Verifiche a taglio delle travi in muratura secondo §C8.7.1.3.1 in combinazioni non sismiche

Sezione	γM	N	M	V	Vt	Vp	Vt fess. diag.	Vt,lim	Comb.	c.s.	Verifica
ini.	3	-3772	-772.15	6138			1699	594	SLU 83	0.1	No
fin.	3	-3205	-396.19	-3561			1548	557	SLU 83	0.16	No

Sezione	γM	N	M	V	Vt	Vp	Vt fess. diag.	Vt,lim	Comb.	c.s.	Verifica
ini.	3	-3604	-737.77	5801			1654	584	SLU 74	0.1	No
fin.	3	-3070	-372.95	-3354			1512	548	SLU 74	0.16	No
ini.	3	-3830	-814.85	6167			1714	598	SLU 84	0.1	No
fin.	3	-3149	-346.58	-3468			1533	553	SLU 84	0.16	No
ini.	3	-3738	-762.25	6073			1690	592	SLU 81	0.1	No
fin.	3	-3176	-393.46	-3532			1540	555	SLU 81	0.16	No
ini.	3	-3638	-747.67	5866			1663	586	SLU 77	0.1	No
fin.	3	-3099	-375.67	-3383			1519	550	SLU 77	0.16	No
ini.	3	-3634	-749.62	5845			1662	586	SLU 79	0.1	No
fin.	3	-3080	-367.13	-3358			1515	549	SLU 79	0.16	No
ini.	3	-3696	-790.37	5895			1679	589	SLU 78	0.1	No
fin.	3	-3043	-326.07	-3290			1505	546	SLU 78	0.17	No
ini.	3	-3662	-780.48	5830			1670	587	SLU 75	0.1	No
fin.	3	-3014	-323.35	-3260			1497	544	SLU 75	0.17	No
ini.	3	-3692	-792.32	5874			1678	589	SLU 80	0.1	No
fin.	3	-3025	-317.52	-3265			1500	545	SLU 80	0.17	No
ini.	3	-3796	-804.95	6102			1705	596	SLU 82	0.1	No
fin.	3	-3120	-343.86	-3439			1525	551	SLU 82	0.16	No

Verifiche a pressoflessione delle travi in muratura in combinazioni sismiche

Sezione	γM	N	M	Mu	Comb.	c.s.	Verifica
ini.	2	805	1784.37	1232.87	SLV 4	0.69	No
fin.	2	-5952	-2962.15	1232.87	SLV 4	0.42	No
ini.	2	-1096	868.3	1232.87	SLV 7	1.42	Si
fin.	2	-4863	-1951.38	1232.87	SLV 7	0.63	No
ini.	2	-5499	-2349.57	1232.87	SLV 16	0.52	No
fin.	2	715	1908.93	1232.87	SLV 16	0.65	No
ini.	2	-5760	-2804.54	1232.87	SLV 13	0.44	No
fin.	2	1781	2503.88	1232.87	SLV 13	0.49	No
ini.	2	-1096	868.3	1232.87	SLV 8	1.42	Si
fin.	2	-4863	-1951.38	1232.87	SLV 8	0.63	No
ini.	2	-5499	-2349.57	1232.87	SLV 15	0.52	No
fin.	2	715	1908.93	1232.87	SLV 15	0.65	No
ini.	2	-5760	-2804.54	1232.87	SLV 14	0.44	No
fin.	2	1781	2503.88	1232.87	SLV 14	0.49	No
ini.	2	544	1329.4	1232.87	SLV 2	0.93	No
fin.	2	-4886	-2367.2	1232.87	SLV 2	0.52	No
ini.	2	544	1329.4	1232.87	SLV 1	0.93	No
fin.	2	-4886	-2367.2	1232.87	SLV 1	0.52	No
ini.	2	805	1784.37	1232.87	SLV 3	0.69	No
fin.	2	-5952	-2962.15	1232.87	SLV 3	0.42	No

Verifiche a taglio delle travi in muratura secondo §C8.7.1.3.1 in combinazioni sismiche

Sezione	γM	N	M	V	Vt	Vp	Vt fess. diag.	Vt,lim	Comb.	c.s.	Verifica
ini.	2	-5760	-2804.54	8484			2576	898	SLV 14	0.11	No
fin.	2	1781	2503.88	1064			1040	0	SLV 14	0	No
ini.	2	805	1784.37	-806			1040	249	SLV 3	0.31	No
fin.	2	-5952	-2962.15	-5418			2627	910	SLV 3	0.17	No
ini.	2	-2987	-371.88	4156			1836	701	SLV 11	0.17	No
fin.	2	-2862	-490.05	-2885			1803	691	SLV 11	0.24	No
ini.	2	-5760	-2804.54	8484			2576	898	SLV 13	0.11	No
fin.	2	1781	2503.88	1064			1040	0	SLV 13	0	No
ini.	2	-5499	-2349.57	7892			2506	881	SLV 16	0.11	No
fin.	2	715	1908.93	139			1040	268	SLV 16	1.93	Si
ini.	2	805	1784.37	-806			1040	249	SLV 4	0.31	No
fin.	2	-5952	-2962.15	-5418			2627	910	SLV 4	0.17	No
ini.	2	-2987	-371.88	4156			1836	701	SLV 12	0.17	No
fin.	2	-2862	-490.05	-2885			1803	691	SLV 12	0.24	No
ini.	2	-3858	-1888.47	6131			2069	769	SLV 10	0.13	No
fin.	2	692	1493.11	197			1040	273	SLV 10	1.39	Si
ini.	2	-5499	-2349.57	7892			2506	881	SLV 15	0.11	No
fin.	2	715	1908.93	139			1040	268	SLV 15	1.93	Si
ini.	2	-3858	-1888.47	6131			2069	769	SLV 9	0.13	No
fin.	2	692	1493.11	197			1040	273	SLV 9	1.39	Si

Tabella dei coefficienti di sicurezza minimi

Stato limite	Coeff.s.	Comb.	Verifica
PF_SLV	0.416	SLV 3	No
V_SLV	0	SLV 13	No
PF_SLU	1.009	SLU 84	Si
V_SLU	0.097	SLU 83	No

Trave di accoppiamento 16

Verifiche condotte secondo D.M. 17-01-18 (N.T.C.)

Dati geometrici

X ini.	Y ini.	Z ini.inf.	Z ini.sup.	H ini.	X fin.	Y fin.	Z fin.inf.	Z fin.sup	H fin.	Luce	Spessore	R. Trazione
-14.163	1.046	0.07	0.67	0.6	-14.963	1.046	0.07	0.67	0.6	0.8	0.45	30000

Caratteristiche del materiale

(Circolare 7 21-01-19 C8.5.I) Muratura in mattoni pieni e malta di calce LC2_Corti

fb_	fhk	fvk0	fhmedio	τ0	fv0	μ	ϕ	fvk,lim	E	G	FC
120000			172500	9000	20000	0.577	0.767	6500	320000000	128000000	1.2

Verifiche a pressoflessione delle travi in muratura in combinazioni non sismiche

Sezione	γM	N	M	Mu	Comb.	c.s.	Verifica
ini.	3	-1630	-213.92	821.91	SLU 79	3.84	Si
fin.	3	-2968	-250.03	821.91	SLU 79	3.29	Si
ini.	3	-1604	-207	821.91	SLU 78	3.97	Si
fin.	3	-2970	-250.06	821.91	SLU 78	3.29	Si
ini.	3	-1633	-210.59	821.91	SLU 74	3.9	Si
fin.	3	-2976	-251.94	821.91	SLU 74	3.26	Si
ini.	3	-1606	-205.43	821.91	SLU 75	4	Si
fin.	3	-2952	-248.67	821.91	SLU 75	3.31	Si
ini.	3	-1603	-208.76	821.91	SLU 80	3.94	Si
fin.	3	-2944	-246.76	821.91	SLU 80	3.33	Si
ini.	3	-1631	-212.16	821.91	SLU 77	3.87	Si
fin.	3	-2994	-253.33	821.91	SLU 77	3.24	Si
ini.	3	-1726	-229.88	821.91	SLU 83	3.58	Si
fin.	3	-3100	-259.93	821.91	SLU 83	3.16	Si
ini.	3	-1699	-224.72	821.91	SLU 84	3.66	Si
fin.	3	-3076	-256.66	821.91	SLU 84	3.2	Si
ini.	3	-1728	-228.31	821.91	SLU 81	3.6	Si
fin.	3	-3081	-258.54	821.91	SLU 81	3.18	Si
ini.	3	-1701	-223.15	821.91	SLU 82	3.68	Si
fin.	3	-3057	-255.26	821.91	SLU 82	3.22	Si

Verifiche a taglio delle travi in muratura secondo §C8.7.1.3.1 in combinazioni non sismiche

Sezione	γM	N	M	V	Vt	Vp	Vt fess. diag.	Vt,lim	Comb.	c.s.	Verifica
ini.	3	-1726	-229.88	3386			1298	501	SLU 83	0.15	No
fin.	3	-3100	-259.93	-11263			1710	619	SLU 83	0.05	No
ini.	3	-1701	-223.15	3299			1290	499	SLU 82	0.15	No
fin.	3	-3057	-255.26	-11009			1697	615	SLU 82	0.06	No
ini.	3	-1631	-212.16	3271			1269	492	SLU 77	0.15	No
fin.	3	-2994	-253.33	-10979			1678	610	SLU 77	0.06	No
ini.	3	-1606	-205.43	3185			1262	490	SLU 75	0.15	No
fin.	3	-2952	-248.67	-10725			1665	607	SLU 75	0.06	No
ini.	3	-1603	-208.76	3228			1261	489	SLU 80	0.15	No
fin.	3	-2944	-246.76	-10808			1663	607	SLU 80	0.06	No
ini.	3	-1699	-224.72	3356			1290	499	SLU 84	0.15	No
fin.	3	-3076	-256.66	-11193			1702	617	SLU 84	0.06	No
ini.	3	-1633	-210.59	3214			1270	492	SLU 74	0.15	No
fin.	3	-2976	-251.94	-10795			1673	609	SLU 74	0.06	No
ini.	3	-1728	-228.31	3329			1298	502	SLU 81	0.15	No
fin.	3	-3081	-258.54	-11079			1704	617	SLU 81	0.06	No
ini.	3	-1604	-207	3242			1261	490	SLU 78	0.15	No
fin.	3	-2970	-250.06	-10909			1671	609	SLU 78	0.06	No
ini.	3	-1630	-213.92	3257			1269	492	SLU 79	0.15	No
fin.	3	-2968	-250.03	-10879			1670	608	SLU 79	0.06	No

Verifiche a pressoflessione delle travi in muratura in combinazioni sismiche

Sezione	γM	N	M	Mu	Comb.	c.s.	Verifica
ini.	2	-291	-1378.75	1232.87	SLV 13	0.89	No
fin.	2	5620	990.53	1232.87	SLV 13	1.24	Si
ini.	2	-1107	-985.97	1232.87	SLV 10	1.25	Si
fin.	2	2354	533.74	1232.87	SLV 10	2.31	Si
ini.	2	-1927	1109.14	1232.87	SLV 3	1.11	Si
fin.	2	-9668	-1336.43	1232.87	SLV 3	0.92	No
ini.	2	-291	-1378.75	1232.87	SLV 14	0.89	No
fin.	2	5620	990.53	1232.87	SLV 14	1.24	Si
ini.	2	-131	-1063.6	1232.87	SLV 15	1.16	Si
fin.	2	4246	754.72	1232.87	SLV 15	1.63	Si
ini.	2	-1107	-985.97	1232.87	SLV 9	1.25	Si
fin.	2	2354	533.74	1232.87	SLV 9	2.31	Si
ini.	2	-1927	1109.14	1232.87	SLV 4	1.11	Si
fin.	2	-9668	-1336.43	1232.87	SLV 4	0.92	No
ini.	2	-2087	793.98	1232.87	SLV 1	1.55	Si
fin.	2	-8294	-1100.62	1232.87	SLV 1	1.12	Si
ini.	2	-2087	793.98	1232.87	SLV 2	1.55	Si
fin.	2	-8294	-1100.62	1232.87	SLV 2	1.12	Si
ini.	2	-131	-1063.6	1232.87	SLV 16	1.16	Si
fin.	2	4246	754.72	1232.87	SLV 16	1.63	Si

Verifiche a taglio delle travi in muratura secondo §C8.7.1.3.1 in combinazioni sismiche

Sezione	γM	N	M	V	Vt	Vp	Vt fess. diag.	Vt,lim	Comb.	c.s.	Verifica
ini.	2	-1107	-985.97	4360			1502	594	SLV 10	0.14	No
fin.	2	2354	533.74	-642			1170	0	SLV 10	0	No
ini.	2	-573	64.53	2205			1342	525	SLV 12	0.24	No
fin.	2	-2228	-252.29	-10230			1838	717	SLV 12	0.07	No
ini.	2	-1112	716.35	-118			1503	594	SLV 8	5.05	Si
fin.	2	-6402	-879.63	-13727			3090	1055	SLV 8	0.08	No
ini.	2	-291	-1378.75	6315			1257	485	SLV 13	0.08	No
fin.	2	5620	990.53	82			1170	0	SLV 13	0	No
ini.	2	-131	-1063.6	5669			1209	461	SLV 15	0.08	No
fin.	2	4246	754.72	-2795			1170	0	SLV 15	0	No
ini.	2	-1112	716.35	-118			1503	594	SLV 7	5.05	Si
fin.	2	-6402	-879.63	-13727			3090	1055	SLV 7	0.08	No
ini.	2	-573	64.53	2205			1342	525	SLV 11	0.24	No
fin.	2	-2228	-252.29	-10230			1838	717	SLV 11	0.07	No
ini.	2	-291	-1378.75	6315			1257	485	SLV 14	0.08	No
fin.	2	5620	990.53	82			1170	0	SLV 14	0	No
ini.	2	-1107	-985.97	4360			1502	594	SLV 9	0.14	No
fin.	2	2354	533.74	-642			1170	0	SLV 9	0	No
ini.	2	-131	-1063.6	5669			1209	461	SLV 16	0.08	No
fin.	2	4246	754.72	-2795			1170	0	SLV 16	0	No

Tabella dei coefficienti di sicurezza minimi

Stato limite	Coeff.s.	Comb.	Verifica
PF_SLV	0.894	SLV 13	No
V_SLV	0	SLV 9	No
PF_SLU	3.162	SLU 83	Si
V_SLU	0.055	SLU 83	No

Trave di accoppiamento 17

Verifiche condotte secondo D.M. 17-01-18 (N.T.C.)

Dati geometrici

X ini.	Y ini.	Z ini.inf.	Z ini.sup.	H ini.	X fin.	Y fin.	Z fin.inf.	Z fin.sup	H fin.	Luce	Spessore	R. Trazione
-12.613	1.046	0.13	0.67	0.54	-13.583	1.046	0.13	0.67	0.54	0.97	0.45	30000

Caratteristiche del materiale

(Circolare 7 21-01-19 C8.5.I) Muratura in mattoni pieni e malta di calce LC2_Corti

fb_	fhk	fvk0	fhmedio	τ0	fv0	μ	ϕ	fvk,lim	E	G	FC
120000			172500	9000	20000	0.577	0.767	6500	320000000	128000000	1.2

Verifiche a pressoflessione delle travi in muratura in combinazioni non sismiche

Sezione	γM	N	M	Mu	Comb.	c.s.	Verifica
ini.	3	-4156	-1097.76	665.75	SLU 82	0.61	No
fin.	3	-2199	314	665.75	SLU 82	2.12	Si
ini.	3	-4201	-1118.88	665.75	SLU 84	0.6	No
fin.	3	-2219	322.48	665.75	SLU 84	2.06	Si
ini.	3	-4079	-1093.03	665.75	SLU 79	0.61	No
fin.	3	-2146	320.07	665.75	SLU 79	2.08	Si
ini.	3	-4003	-1073.23	665.75	SLU 75	0.62	No
fin.	3	-2106	312.13	665.75	SLU 75	2.13	Si
ini.	3	-4096	-1101.71	665.75	SLU 77	0.6	No
fin.	3	-2151	322.39	665.75	SLU 77	2.07	Si
ini.	3	-4048	-1094.35	665.75	SLU 78	0.61	No
fin.	3	-2125	320.6	665.75	SLU 78	2.08	Si
ini.	3	-4249	-1126.24	665.75	SLU 83	0.59	No
fin.	3	-2244	324.26	665.75	SLU 83	2.05	Si
ini.	3	-4051	-1080.59	665.75	SLU 74	0.62	No
fin.	3	-2132	313.91	665.75	SLU 74	2.12	Si
ini.	3	-4031	-1085.68	665.75	SLU 80	0.61	No
fin.	3	-2120	318.29	665.75	SLU 80	2.09	Si
ini.	3	-4205	-1105.12	665.75	SLU 81	0.6	No
fin.	3	-2225	315.78	665.75	SLU 81	2.11	Si

Verifiche a taglio delle travi in muratura secondo §C8.7.1.3.1 in combinazioni non sismiche

Sezione	γM	N	M	V	Vt	Vp	Vt fess. diag.	Vt,lim	Comb.	c.s.	Verifica
ini.	3	-4003	-1073.23	2758			1691	572	SLU 75	0.21	No
fin.	3	-2106	312.13	-1959			1186	445	SLU 75	0.23	No
ini.	3	-4031	-1085.68	2790			1699	574	SLU 80	0.21	No
fin.	3	-2120	318.29	-1976			1189	447	SLU 80	0.23	No
ini.	3	-4079	-1093.03	2802			1712	577	SLU 79	0.21	No
fin.	3	-2146	320.07	-1987			1196	448	SLU 79	0.23	No
ini.	3	-4048	-1094.35	2807			1703	575	SLU 78	0.2	No
fin.	3	-2125	320.6	-1988			1191	447	SLU 78	0.22	No
ini.	3	-4201	-1118.88	2889			1744	584	SLU 84	0.2	No
fin.	3	-2219	322.48	-2072			1215	454	SLU 84	0.22	No
ini.	3	-4051	-1080.59	2770			1704	575	SLU 74	0.21	No
fin.	3	-2132	313.91	-1970			1192	447	SLU 74	0.23	No
ini.	3	-4205	-1105.12	2852			1745	584	SLU 81	0.2	No
fin.	3	-2225	315.78	-2053			1217	454	SLU 81	0.22	No
ini.	3	-4156	-1097.76	2840			1732	581	SLU 82	0.2	No
fin.	3	-2199	314	-2042			1210	453	SLU 82	0.22	No
ini.	3	-4249	-1126.24	2900			1757	587	SLU 83	0.2	No
fin.	3	-2244	324.26	-2082			1222	456	SLU 83	0.22	No
ini.	3	-4096	-1101.71	2819			1716	578	SLU 77	0.2	No
fin.	3	-2151	322.39	-1999			1198	449	SLU 77	0.22	No

Verifiche a pressoflessione delle travi in muratura in combinazioni sismiche

Sezione	γM	N	M	Mu	Comb.	c.s.	Verifica
ini.	2	-3874	-408.5	998.62	SLV 10	2.44	Si
fin.	2	-2176	155.58	998.62	SLV 10	6.42	Si
ini.	2	-4631	-1167.64	998.62	SLV 13	0.86	No
fin.	2	-2705	604.5	998.62	SLV 13	1.65	Si
ini.	2	-1577	-1032.64	998.62	SLV 8	0.97	No
fin.	2	-691	267.97	998.62	SLV 8	3.73	Si
ini.	2	-2606	-1389.13	998.62	SLV 11	0.72	No
fin.	2	-1382	538.03	998.62	SLV 11	1.86	Si
ini.	2	-2606	-1389.13	998.62	SLV 12	0.72	No
fin.	2	-1382	538.03	998.62	SLV 12	1.86	Si
ini.	2	-3874	-408.5	998.62	SLV 9	2.44	Si
fin.	2	-2176	155.58	998.62	SLV 9	6.42	Si
ini.	2	-4631	-1167.64	998.62	SLV 14	0.86	No
fin.	2	-2705	604.5	998.62	SLV 14	1.65	Si
ini.	2	-4250	-1461.83	998.62	SLV 16	0.68	No
fin.	2	-2466	719.23	998.62	SLV 16	1.39	Si
ini.	2	-1577	-1032.64	998.62	SLV 7	0.97	No
fin.	2	-691	267.97	998.62	SLV 7	3.73	Si
ini.	2	-4250	-1461.83	998.62	SLV 15	0.68	No

Sezione	γM	N	M	Mu	Comb.	c.s.	Verifica
fin.	2	-2466	719.23	998.62	SLV 15	1.39	Si

Verifiche a taglio delle travi in muratura secondo §C8.7.1.3.1 in combinazioni sismiche

Sezione	γM	N	M	V	Vt	Vp	Vt fess. diag.	Vt,lim	Comb.	c.s.	Verifica
ini.	2	-821	-273.5	21			1155	456	SLV 4	21.21	Si
fin.	2	-163	-180.95	-2015			979	375	SLV 4	0.19	No
ini.	2	-4631	-1167.64	3678			2171	772	SLV 13	0.21	No
fin.	2	-2705	604.5	-570			1657	633	SLV 13	1.11	Si
ini.	2	-1201	20.69	-577			1256	497	SLV 1	0.86	No
fin.	2	-401	-295.69	-1976			1043	406	SLV 1	0.21	No
ini.	2	-4631	-1167.64	3678			2171	772	SLV 14	0.21	No
fin.	2	-2705	604.5	-570			1657	633	SLV 14	1.11	Si
ini.	2	-1201	20.69	-577			1256	497	SLV 2	0.86	No
fin.	2	-401	-295.69	-1976			1043	406	SLV 2	0.21	No
ini.	2	-2606	-1389.13	3486			1631	625	SLV 12	0.18	No
fin.	2	-1382	538.03	-1146			1304	515	SLV 12	0.45	No
ini.	2	-4250	-1461.83	4277			2069	747	SLV 15	0.17	No
fin.	2	-2466	719.23	-609			1594	613	SLV 15	1.01	Si
ini.	2	-821	-273.5	21			1155	456	SLV 3	21.21	Si
fin.	2	-163	-180.95	-2015			979	375	SLV 3	0.19	No
ini.	2	-4250	-1461.83	4277			2069	747	SLV 16	0.17	No
fin.	2	-2466	719.23	-609			1594	613	SLV 16	1.01	Si
ini.	2	-2606	-1389.13	3486			1631	625	SLV 11	0.18	No
fin.	2	-1382	538.03	-1146			1304	515	SLV 11	0.45	No

Tabella dei coefficienti di sicurezza minimi

Stato limite	Coeff.s.	Comb.	Verifica
PF_SLV	0.683	SLV 15	No
V_SLV	0.175	SLV 15	No
PF_SLU	0.591	SLU 83	No
V_SLU	0.202	SLU 84	No

Trave di accoppiamento 18

Verifiche condotte secondo D.M. 17-01-18 (N.T.C.)

Dati geometrici

X ini.	Y ini.	Z ini.inf.	Z ini.sup.	H ini.	X fin.	Y fin.	Z fin.inf.	Z fin.sup	H fin.	Luce	Spessore	R. Trazione
-12.238	1.046	-2.03	0.67	2.7	-12.283	1.046	-2.03	0.67	2.7	0.045	0.45	30000

Caratteristiche del materiale

(Circolare 7 21-01-19 C8.5.I) Muratura in mattoni pieni e malta di calce LC2_Corti

fb_	fhk	fvk0	fhmedio	τ0	fv0	μ	ϕ	fvk,lim	E	G	FC
120000			172500	9000	20000	0.577	0.767	6500	320000000	128000000	1.2

Verifiche a pressoflessione delle travi in muratura in combinazioni non sismiche

Sezione	γM	N	M	Mu	Comb.	c.s.	Verifica
ini.	3	-6055	2307.49	16643.71	SLU 74	7.21	Si
fin.	3	-6055	2297.58	16643.71	SLU 74	7.24	Si
ini.	3	-6201	2376.2	16643.71	SLU 82	7	Si
fin.	3	-6201	2363.32	16643.71	SLU 82	7.04	Si
ini.	3	-6134	2318.44	16643.71	SLU 77	7.18	Si
fin.	3	-6134	2310.12	16643.71	SLU 77	7.2	Si
ini.	3	-6339	2432.06	16643.71	SLU 83	6.84	Si
fin.	3	-6339	2420.33	16643.71	SLU 83	6.88	Si
ini.	3	-6104	2314.92	16643.71	SLU 79	7.19	Si
fin.	3	-6104	2306.77	16643.71	SLU 79	7.22	Si
ini.	3	-6073	2273.52	16643.71	SLU 78	7.32	Si
fin.	3	-6073	2265.65	16643.71	SLU 78	7.35	Si
ini.	3	-6043	2270	16643.71	SLU 80	7.33	Si
fin.	3	-6043	2262.3	16643.71	SLU 80	7.36	Si
ini.	3	-6261	2421.11	16643.71	SLU 81	6.87	Si
fin.	3	-6261	2407.79	16643.71	SLU 81	6.91	Si
ini.	3	-6279	2387.15	16643.71	SLU 84	6.97	Si
fin.	3	-6279	2375.86	16643.71	SLU 84	7.01	Si
ini.	3	-5995	2262.57	16643.71	SLU 75	7.36	Si
fin.	3	-5995	2253.11	16643.71	SLU 75	7.39	Si

Verifiche a taglio delle travi in muratura secondo §C8.7.1.3.1 in combinazioni non sismiche

Sezione	γM	N	M	V	Vt	Vp	Vt fess. diag.	Vt,lim	Comb.	c.s.	Verifica
ini.	3	-4720	1813.2	-219			6567	2591	SLU 18	11.81	Si
fin.	3	-4720	1802.76	-238			6567	2591	SLU 18	10.9	Si
ini.	3	-6279	2387.15	-234			7191	2812	SLU 84	12	Si
fin.	3	-6279	2375.86	-258			7191	2812	SLU 84	10.9	Si
ini.	3	-5328	2060.53	-268			6810	2679	SLU 40	9.99	Si
fin.	3	-5328	2047.9	-286			6810	2679	SLU 40	9.35	Si
ini.	3	-5467	2116.4	-243			6866	2699	SLU 41	11.13	Si
fin.	3	-5467	2104.91	-261			6866	2699	SLU 41	10.34	Si
ini.	3	-6201	2376.2	-270			7159	2801	SLU 82	10.39	Si
fin.	3	-6201	2363.32	-294			7159	2801	SLU 82	9.54	Si
ini.	3	-6339	2432.06	-244			7215	2820	SLU 83	11.55	Si
fin.	3	-6339	2420.33	-268			7215	2820	SLU 83	10.52	Si
ini.	3	-5593	2128.86	-221			6916	2717	SLU 60	12.3	Si
fin.	3	-5593	2118.18	-245			6916	2717	SLU 60	11.1	Si
ini.	3	-5388	2105.45	-278			6834	2688	SLU 39	9.67	Si
fin.	3	-5388	2092.37	-296			6834	2688	SLU 39	9.07	Si
ini.	3	-5406	2071.48	-233			6842	2691	SLU 42	11.56	Si

Sezione	γM	N	M	V	Vt	Vp	Vt fess. diag.	Vt,lim	Comb.	c.s.	Verifica
fin.	3	-5406	2060.44	-251			6842	2691	SLU 42	10.72	Si
ini.	3	-6261	2421.11	-280			7184	2810	SLU 81	10.05	Si
fin.	3	-6261	2407.79	-303			7184	2810	SLU 81	9.26	Si

Verifiche a pressoflessione delle travi in muratura in combinazioni sismiche

Sezione	γM	N	M	Mu	Comb.	c.s.	Verifica
ini.	2	-3213	2874.7	24131.71	SLV 5	8.39	Si
fin.	2	-3217	2811.02	24131.71	SLV 5	8.58	Si
ini.	2	-7454	3090.8	24131.71	SLV 14	7.81	Si
fin.	2	-7432	3358.97	24131.71	SLV 14	7.18	Si
ini.	2	-7370	2110.82	24131.71	SLV 15	11.43	Si
fin.	2	-7349	2365.54	24131.71	SLV 15	10.2	Si
ini.	2	-3213	2874.7	24131.71	SLV 6	8.39	Si
fin.	2	-3217	2811.02	24131.71	SLV 6	8.58	Si
ini.	2	-778	999.41	24131.71	SLV 1	24.15	Si
fin.	2	-798	732.89	24131.71	SLV 1	32.93	Si
ini.	2	-7370	2110.82	24131.71	SLV 16	11.43	Si
fin.	2	-7349	2365.54	24131.71	SLV 16	10.2	Si
ini.	2	-7454	3090.8	24131.71	SLV 13	7.81	Si
fin.	2	-7432	3358.97	24131.71	SLV 13	7.18	Si
ini.	2	-5215	3502.12	24131.71	SLV 9	6.89	Si
fin.	2	-5207	3598.85	24131.71	SLV 9	6.71	Si
ini.	2	-5215	3502.12	24131.71	SLV 10	6.89	Si
fin.	2	-5207	3598.85	24131.71	SLV 10	6.71	Si
ini.	2	-778	999.41	24131.71	SLV 2	24.15	Si
fin.	2	-798	732.89	24131.71	SLV 2	32.93	Si

Verifiche a taglio delle travi in muratura secondo §C8.7.1.3.1 in combinazioni sismiche

Sezione	γM	N	M	V	Vt	Vp	Vt fess. diag.	Vt,lim	Comb.	c.s.	Verifica
ini.	2	-694	19.43	-6539			7296	2788	SLV 3	0.43	No
fin.	2	-716	-260.55	-6551			7305	2793	SLV 3	0.43	No
ini.	2	-778	999.41	-6221			7330	2805	SLV 1	0.45	No
fin.	2	-798	732.89	-6246			7338	2809	SLV 1	0.45	No
ini.	2	-7454	3090.8	6303			10000	3942	SLV 14	0.63	No
fin.	2	-7432	3358.97	6277			9992	3938	SLV 14	0.63	No
ini.	2	-2932	-391.9	-2527			8192	3216	SLV 8	1.27	Si
fin.	2	-2941	-500.43	-2523			8195	3218	SLV 8	1.28	Si
ini.	2	-694	19.43	-6539			7296	2788	SLV 4	0.43	No
fin.	2	-716	-260.55	-6551			7305	2793	SLV 4	0.43	No
ini.	2	-778	999.41	-6221			7330	2805	SLV 2	0.45	No
fin.	2	-798	732.89	-6246			7338	2809	SLV 2	0.45	No
ini.	2	-7370	2110.82	5985			9966	3929	SLV 15	0.66	No
fin.	2	-7349	2365.54	5972			9958	3926	SLV 15	0.66	No
ini.	2	-7454	3090.8	6303			10000	3942	SLV 13	0.63	No
fin.	2	-7432	3358.97	6277			9992	3938	SLV 13	0.63	No
ini.	2	-7370	2110.82	5985			9966	3929	SLV 16	0.66	No
fin.	2	-7349	2365.54	5972			9958	3926	SLV 16	0.66	No
ini.	2	-2932	-391.9	-2527			8192	3216	SLV 7	1.27	Si
fin.	2	-2941	-500.43	-2523			8195	3218	SLV 7	1.28	Si

Tabella dei coefficienti di sicurezza minimi

Stato limite	Coeff.s.	Comb.	Verifica
PF_SLV	6.705	SLV 9	Si
V_SLV	0.426	SLV 3	No
PF_SLU	6.843	SLU 83	Si
V_SLU	9.07	SLU 39	Si

Trave di accoppiamento 19

Verifiche condotte secondo D.M. 17-01-18 (N.T.C.)

Dati geometrici

X ini.	Y ini.	Z ini.inf.	Z ini.sup.	H ini.	X fin.	Y fin.	Z fin.inf.	Z fin.sup	H fin.	Luce	Spessore	R. Trazione
-11.237	1.046	0.13	0.67	0.54	-12.237	1.046	0.13	0.67	0.54	1	0.45	30000

Caratteristiche del materiale

(Circolare 7 21-01-19 C8.5.I) Muratura in mattoni pieni e malta di calce LC2_Corti

fb_	fhk	fvk0	fhmedio	τ0	fv0	μ	ϕ	fvk,lim	E	G	FC
120000			172500	9000	20000	0.577	0.767	6500	320000000	128000000	1.2

Verifiche a pressoflessione delle travi in muratura in combinazioni non sismiche

Sezione	γM	N	M	Mu	Comb.	c.s.	Verifica
ini.	3	-3649	432.73	665.75	SLU 80	1.54	Si
fin.	3	-1207	-3.1	665.75	SLU 80	214.47	Si
ini.	3	-3670	437.71	665.75	SLU 78	1.52	Si
fin.	3	-1203	-4.73	665.75	SLU 78	140.71	Si
ini.	3	-3853	457.55	665.75	SLU 83	1.46	Si
fin.	3	-1287	-3.34	665.75	SLU 83	199.55	Si
ini.	3	-3639	436.46	665.75	SLU 75	1.53	Si
fin.	3	-1195	-5.41	665.75	SLU 75	123.11	Si
ini.	3	-3718	444.95	665.75	SLU 77	1.5	Si
fin.	3	-1225	-4.2	665.75	SLU 77	158.49	Si
ini.	3	-3822	456.29	665.75	SLU 81	1.46	Si
fin.	3	-1279	-4.01	665.75	SLU 81	165.9	Si
ini.	3	-3775	449.05	665.75	SLU 82	1.48	Si
fin.	3	-1258	-4.54	665.75	SLU 82	146.53	Si
ini.	3	-3806	450.31	665.75	SLU 84	1.48	Si

Sezione	γM	N	M	Mu	Comb.	c.s.	Verifica
fin.	3	-1266	-3.87	665.75	SLU 84	172.17	Si
ini.	3	-3696	439.97	665.75	SLU 79	1.51	Si
fin.	3	-1228	-2.57	665.75	SLU 79	258.69	Si
ini.	3	-3687	443.69	665.75	SLU 74	1.5	Si
fin.	3	-1217	-4.88	665.75	SLU 74	136.5	Si

Verifiche a taglio delle travi in muratura secondo §C8.7.1.3.1 in combinazioni non sismiche

Sezione	γM	N	M	V	Vt	Vp	Vt fess. diag.	Vt,lim	Comb.	c.s.	Verifica
ini.	3	-3670	437.71	-1123			1603	552	SLU 78	0.49	No
fin.	3	-1203	-4.73	767			945	370	SLU 78	0.48	No
ini.	3	-3639	436.46	-1106			1594	550	SLU 75	0.5	No
fin.	3	-1195	-5.41	740			943	369	SLU 75	0.5	No
ini.	3	-3822	456.29	-1134			1643	561	SLU 81	0.5	No
fin.	3	-1279	-4.01	746			965	377	SLU 81	0.51	No
ini.	3	-3649	432.73	-1106			1597	551	SLU 80	0.5	No
fin.	3	-1207	-3.1	760			946	370	SLU 80	0.49	No
ini.	3	-3718	444.95	-1140			1615	555	SLU 77	0.49	No
fin.	3	-1225	-4.2	770			950	372	SLU 77	0.48	No
ini.	3	-3696	439.97	-1123			1609	554	SLU 79	0.49	No
fin.	3	-1228	-2.57	763			951	372	SLU 79	0.49	No
ini.	3	-3853	457.55	-1151			1651	563	SLU 83	0.49	No
fin.	3	-1287	-3.34	773			967	378	SLU 83	0.49	No
ini.	3	-3806	450.31	-1134			1639	560	SLU 84	0.49	No
fin.	3	-1266	-3.87	770			961	376	SLU 84	0.49	No
ini.	3	-3687	443.69	-1123			1607	553	SLU 74	0.49	No
fin.	3	-1217	-4.88	743			948	371	SLU 74	0.5	No
ini.	3	-3775	449.05	-1117			1630	559	SLU 82	0.5	No
fin.	3	-1258	-4.54	744			959	375	SLU 82	0.5	No

Verifiche a pressoflessione delle travi in muratura in combinazioni sismiche

Sezione	γM	N	M	Mu	Comb.	c.s.	Verifica
ini.	2	-1374	-731.43	998.62	SLV 16	1.37	Si
fin.	2	-3012	493.88	998.62	SLV 16	2.02	Si
ini.	2	-3608	1340.61	998.62	SLV 2	0.74	No
fin.	2	1364	-499.7	998.62	SLV 2	2	Si
ini.	2	-3608	1340.61	998.62	SLV 1	0.74	No
fin.	2	1364	-499.7	998.62	SLV 1	2	Si
ini.	2	-3701	1480.87	998.62	SLV 3	0.67	No
fin.	2	2205	-655.35	998.62	SLV 3	1.52	Si
ini.	2	-2995	870.19	998.62	SLV 7	1.15	Si
fin.	2	1360	-434.7	998.62	SLV 7	2.3	Si
ini.	2	-2995	870.19	998.62	SLV 8	1.15	Si
fin.	2	1360	-434.7	998.62	SLV 8	2.3	Si
ini.	2	-1281	-871.68	998.62	SLV 13	1.15	Si
fin.	2	-3853	649.52	998.62	SLV 13	1.54	Si
ini.	2	-3701	1480.87	998.62	SLV 4	0.67	No
fin.	2	2205	-655.35	998.62	SLV 4	1.52	Si
ini.	2	-1374	-731.43	998.62	SLV 15	1.37	Si
fin.	2	-3012	493.88	998.62	SLV 15	2.02	Si
ini.	2	-1281	-871.68	998.62	SLV 14	1.15	Si
fin.	2	-3853	649.52	998.62	SLV 14	1.54	Si

Verifiche a taglio delle travi in muratura secondo §C8.7.1.3.1 in combinazioni sismiche

Sezione	γM	N	M	V	Vt	Vp	Vt fess. diag.	Vt,lim	Comb.	c.s.	Verifica
ini.	2	-2995	870.19	-2348			1734	656	SLV 8	0.28	No
fin.	2	1360	-434.7	-7			936	0	SLV 8	0	No
ini.	2	-1374	-731.43	1424			1302	514	SLV 16	0.36	No
fin.	2	-3012	493.88	2200			1739	657	SLV 16	0.3	No
ini.	2	-3608	1340.61	-2940			1898	702	SLV 2	0.24	No
fin.	2	1364	-499.7	-1230			936	0	SLV 2	0	No
ini.	2	-3608	1340.61	-2940			1898	702	SLV 1	0.24	No
fin.	2	1364	-499.7	-1230			936	0	SLV 1	0	No
ini.	2	-2995	870.19	-2348			1734	656	SLV 7	0.28	No
fin.	2	1360	-434.7	-7			936	0	SLV 7	0	No
ini.	2	-3701	1480.87	-3455			1923	708	SLV 3	0.21	No
fin.	2	2205	-655.35	-1218			936	0	SLV 3	0	No
ini.	2	-1281	-871.68	1938			1277	505	SLV 13	0.26	No
fin.	2	-3853	649.52	2188			1963	719	SLV 13	0.33	No
ini.	2	-1374	-731.43	1424			1302	514	SLV 15	0.36	No
fin.	2	-3012	493.88	2200			1739	657	SLV 15	0.3	No
ini.	2	-1281	-871.68	1938			1277	505	SLV 14	0.26	No
fin.	2	-3853	649.52	2188			1963	719	SLV 14	0.33	No
ini.	2	-3701	1480.87	-3455			1923	708	SLV 4	0.21	No
fin.	2	2205	-655.35	-1218			936	0	SLV 4	0	No

Tabella dei coefficienti di sicurezza minimi

Stato limite	Coeff.s.	Comb.	Verifica
PF_SLV	0.674	SLV 3	No
V_SLV	0	SLV 1	No
PF_SLU	1.455	SLU 83	Si
V_SLU	0.483	SLU 78	No

Trave di accoppiamento 20

Verifiche condotte secondo D.M. 17-01-18 (N.T.C.)

Dati geometrici

X ini.	Y ini.	Z ini.inf.	Z ini.sup.	H ini.	X fin.	Y fin.	Z fin.inf.	Z fin.sup	H fin.	Luce	Spessore	R. Trazione
-6.528	1.046	0.07	0.67	0.6	-7.428	1.046	0.07	0.67	0.6	0.9	0.45	30000

Caratteristiche del materiale

(Circolare 7 21-01-19 C8.5.I) Muratura in mattoni pieni e malta di calce LC2_Corti

fb_	fhk	fvk0	fhmedio	τ0	fv0	μ	ϕ	fvk,lim	E	G	FC
120000			172500	9000	20000	0.577	0.767	6500	320000000	128000000	1.2

Verifiche a pressoflessione delle travi in muratura in combinazioni non sismiche

Sezione	γM	N	M	Mu	Comb.	c.s.	Verifica
ini.	3	-3833	-684.87	821.91	SLU 84	1.2	Si
fin.	3	-2781	-692.8	821.91	SLU 84	1.19	Si
ini.	3	-3783	-674.24	821.91	SLU 82	1.22	Si
fin.	3	-2783	-695.92	821.91	SLU 82	1.18	Si
ini.	3	-3314	-575.72	821.91	SLU 60	1.43	Si
fin.	3	-2568	-665.38	821.91	SLU 60	1.24	Si
ini.	3	-3698	-651.22	821.91	SLU 81	1.26	Si
fin.	3	-2836	-737.96	821.91	SLU 81	1.11	Si
ini.	3	-3695	-662.95	821.91	SLU 76	1.24	Si
fin.	3	-2610	-630.75	821.91	SLU 76	1.3	Si
ini.	3	-3657	-652.16	821.91	SLU 75	1.26	Si
fin.	3	-2656	-663.1	821.91	SLU 75	1.24	Si
ini.	3	-3604	-635.22	821.91	SLU 79	1.29	Si
fin.	3	-2697	-697.71	821.91	SLU 79	1.18	Si
ini.	3	-3573	-629.14	821.91	SLU 74	1.31	Si
fin.	3	-2709	-705.15	821.91	SLU 74	1.17	Si
ini.	3	-3622	-639.77	821.91	SLU 77	1.28	Si
fin.	3	-2707	-702.03	821.91	SLU 77	1.17	Si
ini.	3	-3748	-661.85	821.91	SLU 83	1.24	Si
fin.	3	-2834	-734.84	821.91	SLU 83	1.12	Si

Verifiche a taglio delle travi in muratura secondo §C8.7.1.3.1 in combinazioni non sismiche

Sezione	γM	N	M	V	Vt	Vp	Vt fess. diag.	Vt,lim	Comb.	c.s.	Verifica
ini.	3	-3783	-674.24	8815			1702	595	SLU 82	0.07	No
fin.	3	-2783	-695.92	-4468			1435	528	SLU 82	0.12	No
ini.	3	-3698	-651.22	8762			1679	590	SLU 81	0.07	No
fin.	3	-2836	-737.96	-4630			1449	531	SLU 81	0.11	No
ini.	3	-3748	-661.85	8904			1693	593	SLU 83	0.07	No
fin.	3	-2834	-734.84	-4654			1449	531	SLU 83	0.11	No
ini.	3	-3833	-684.87	8958			1715	598	SLU 84	0.07	No
fin.	3	-2781	-692.8	-4491			1435	528	SLU 84	0.12	No
ini.	3	-3573	-629.14	8490			1646	582	SLU 74	0.07	No
fin.	3	-2709	-705.15	-4462			1416	522	SLU 74	0.12	No
ini.	3	-3604	-635.22	8566			1654	584	SLU 79	0.07	No
fin.	3	-2697	-697.71	-4454			1412	521	SLU 79	0.12	No
ini.	3	-3707	-662.79	8686			1682	590	SLU 78	0.07	No
fin.	3	-2654	-659.99	-4323			1401	518	SLU 78	0.12	No
ini.	3	-3657	-652.16	8544			1668	587	SLU 75	0.07	No
fin.	3	-2656	-663.1	-4299			1401	519	SLU 75	0.12	No
ini.	3	-3622	-639.77	8633			1659	585	SLU 77	0.07	No
fin.	3	-2707	-702.03	-4485			1415	522	SLU 77	0.12	No
ini.	3	-3688	-658.24	8619			1677	589	SLU 80	0.07	No
fin.	3	-2644	-655.67	-4292			1398	518	SLU 80	0.12	No

Verifiche a pressoflessione delle travi in muratura in combinazioni sismiche

Sezione	γM	N	M	Mu	Comb.	c.s.	Verifica
ini.	2	-660	49.52	1232.87	SLV 4	24.9	Si
fin.	2	-6603	-2485.8	1232.87	SLV 4	0.5	No
ini.	2	-1511	-61.17	1232.87	SLV 2	20.15	Si
fin.	2	-7110	-2448.08	1232.87	SLV 2	0.5	No
ini.	2	-4124	-876.76	1232.87	SLV 14	1.41	Si
fin.	2	2870	1511.48	1232.87	SLV 14	0.82	No
ini.	2	-660	49.52	1232.87	SLV 3	24.9	Si
fin.	2	-6603	-2485.8	1232.87	SLV 3	0.5	No
ini.	2	-4124	-876.76	1232.87	SLV 13	1.41	Si
fin.	2	2870	1511.48	1232.87	SLV 13	0.82	No
ini.	2	-1511	-61.17	1232.87	SLV 1	20.15	Si
fin.	2	-7110	-2448.08	1232.87	SLV 1	0.5	No
ini.	2	-3273	-766.07	1232.87	SLV 16	1.61	Si
fin.	2	3377	1473.76	1232.87	SLV 16	0.84	No
ini.	2	-581	-106.8	1232.87	SLV 8	11.54	Si
fin.	2	-2518	-1143.96	1232.87	SLV 8	1.08	Si
ini.	2	-581	-106.8	1232.87	SLV 7	11.54	Si
fin.	2	-2518	-1143.96	1232.87	SLV 7	1.08	Si
ini.	2	-3273	-766.07	1232.87	SLV 15	1.61	Si
fin.	2	3377	1473.76	1232.87	SLV 15	0.84	No

Verifiche a taglio delle travi in muratura secondo §C8.7.1.3.1 in combinazioni sismiche

Sezione	γM	N	M	V	Vt	Vp	Vt fess. diag.	Vt,lim	Comb.	c.s.	Verifica
ini.	2	-4124	-876.76	9715			2139	788	SLV 14	0.08	No
fin.	2	2870	1511.48	2536			1040	0	SLV 14	0	No
ini.	2	-1365	-351.48	7277			1404	555	SLV 11	0.08	No
fin.	2	476	43.91	-2457			1040	315	SLV 11	0.13	No
ini.	2	-3273	-766.07	9956			1913	724	SLV 16	0.07	No
fin.	2	3377	1473.76	1934			1040	0	SLV 16	0	No
ini.	2	-3273	-766.07	9956			1913	724	SLV 15	0.07	No
fin.	2	3377	1473.76	1934			1040	0	SLV 15	0	No
ini.	2	-581	-106.8	4741			1195	468	SLV 8	0.1	No
fin.	2	-2518	-1143.96	-5619			1711	662	SLV 8	0.12	No

Sezione	γM	N	M	V	Vt	Vp	Vt fess. diag.	Vt,lim	Comb.	c.s.	Verifica
ini.	2	-660	49.52	1502			1216	477	SLV 3	0.32	No
fin.	2	-6603	-2485.8	-8605			2800	950	SLV 3	0.11	No
ini.	2	-1365	-351.48	7277			1404	555	SLV 12	0.08	No
fin.	2	476	43.91	-2457			1040	315	SLV 12	0.13	No
ini.	2	-660	49.52	1502			1216	477	SLV 4	0.32	No
fin.	2	-6603	-2485.8	-8605			2800	950	SLV 4	0.11	No
ini.	2	-581	-106.8	4741			1195	468	SLV 7	0.1	No
fin.	2	-2518	-1143.96	-5619			1711	662	SLV 7	0.12	No
ini.	2	-4124	-876.76	9715			2139	788	SLV 13	0.08	No
fin.	2	2870	1511.48	2536			1040	0	SLV 13	0	No

Tabella dei coefficienti di sicurezza minimi

Stato limite	Coeff.s.	Comb.	Verifica
PF_SLV	0.496	SLV 3	No
V_SLV	0	SLV 13	No
PF_SLU	1.114	SLU 81	Si
V_SLU	0.067	SLU 83	No

Trave di accoppiamento 21

Verifiche condotte secondo D.M. 17-01-18 (N.T.C.)

Dati geometrici

X ini.	Y ini.	Z ini.inf.	Z ini.sup.	H ini.	X fin.	Y fin.	Z fin.inf.	Z fin.sup	H fin.	Luce	Spessore	R. Trazione
-5.147	1.046	0.07	0.67	0.6	-6.147	1.046	0.07	0.67	0.6	1	0.45	30000

Caratteristiche del materiale

(Circolare 7 21-01-19 C8.5.I) Muratura in mattoni pieni e malta di calce LC2_Corti

fb_	fhk	fvk0	fhmedio	τ0	fv0	μ	ϕ	fvk,lim	E	G	FC
120000			172500	9000	20000	0.577	0.767	6500	320000000	128000000	1.2

Verifiche a pressoflessione delle travi in muratura in combinazioni non sismiche

Sezione	γM	N	M	Mu	Comb.	c.s.	Verifica
ini.	3	-7510	-573.69	821.91	SLU 79	1.43	Si
fin.	3	-3669	-523.3	821.91	SLU 79	1.57	Si
ini.	3	-7715	-586.77	821.91	SLU 83	1.4	Si
fin.	3	-3808	-551.33	821.91	SLU 83	1.49	Si
ini.	3	-7568	-578.83	821.91	SLU 77	1.42	Si
fin.	3	-3689	-525.93	821.91	SLU 77	1.56	Si
ini.	3	-7003	-519.34	821.91	SLU 73	1.58	Si
fin.	3	-3695	-564.38	821.91	SLU 73	1.46	Si
ini.	3	-7546	-572.51	821.91	SLU 81	1.44	Si
fin.	3	-3751	-547.53	821.91	SLU 81	1.5	Si
ini.	3	-7172	-533.6	821.91	SLU 76	1.54	Si
fin.	3	-3753	-568.18	821.91	SLU 76	1.45	Si
ini.	3	-7466	-563.33	821.91	SLU 78	1.46	Si
fin.	3	-3774	-555.14	821.91	SLU 78	1.48	Si
ini.	3	-7613	-571.27	821.91	SLU 84	1.44	Si
fin.	3	-3893	-580.54	821.91	SLU 84	1.42	Si
ini.	3	-7400	-564.57	821.91	SLU 74	1.46	Si
fin.	3	-3632	-522.14	821.91	SLU 74	1.57	Si
ini.	3	-7444	-557.02	821.91	SLU 82	1.48	Si
fin.	3	-3835	-576.74	821.91	SLU 82	1.43	Si

Verifiche a taglio delle travi in muratura secondo §C8.7.1.3.1 in combinazioni non sismiche

Sezione	γM	N	M	V	Vt	Vp	Vt fess. diag.	Vt,lim	Comb.	c.s.	Verifica
ini.	3	-7510	-573.69	15921			2696	797	SLU 79	0.05	No
fin.	3	-3669	-523.3	-7016			1672	588	SLU 79	0.08	No
ini.	3	-7400	-564.57	15777			2666	792	SLU 74	0.05	No
fin.	3	-3632	-522.14	-6993			1662	585	SLU 74	0.08	No
ini.	3	-7298	-549.07	15483			2639	787	SLU 75	0.05	No
fin.	3	-3716	-551.34	-7028			1684	591	SLU 75	0.08	No
ini.	3	-7408	-558.19	15626			2669	793	SLU 80	0.05	No
fin.	3	-3754	-552.5	-7050			1694	593	SLU 80	0.08	No
ini.	3	-7715	-586.77	16461			2750	807	SLU 83	0.05	No
fin.	3	-3808	-551.33	-7331			1709	597	SLU 83	0.08	No
ini.	3	-7444	-557.02	15890			2678	794	SLU 82	0.05	No
fin.	3	-3835	-576.74	-7294			1716	598	SLU 82	0.08	No
ini.	3	-7613	-571.27	16167			2723	802	SLU 84	0.05	No
fin.	3	-3893	-580.54	-7365			1731	602	SLU 84	0.08	No
ini.	3	-7546	-572.51	16184			2705	799	SLU 81	0.05	No
fin.	3	-3751	-547.53	-7260			1693	593	SLU 81	0.08	No
ini.	3	-7466	-563.33	15760			2684	795	SLU 78	0.05	No
fin.	3	-3774	-555.14	-7099			1699	594	SLU 78	0.08	No
ini.	3	-7568	-578.83	16055			2711	800	SLU 77	0.05	No
fin.	3	-3689	-525.93	-7065			1677	589	SLU 77	0.08	No

Verifiche a pressoflessione delle travi in muratura in combinazioni sismiche

Sezione	γM	N	M	Mu	Comb.	c.s.	Verifica
ini.	2	-10382	-1079.3	1232.87	SLV 12	1.14	Si
fin.	2	-2375	103.86	1232.87	SLV 12	11.87	Si
ini.	2	-15899	-1628.8	1232.87	SLV 16	0.76	No
fin.	2	-4606	44.94	1232.87	SLV 16	27.44	Si
ini.	2	-14470	-1412.61	1232.87	SLV 13	0.87	No
fin.	2	-5071	-174.95	1232.87	SLV 13	7.05	Si
ini.	2	6055	878.03	1232.87	SLV 1	1.4	Si
fin.	2	-248	-739.53	1232.87	SLV 1	1.67	Si

Sezione	γM	N	M	Mu	Comb.	c.s.	Verifica
ini.	2	-15899	-1628.8	1232.87	SLV 15	0.76	No
fin.	2	-4606	44.94	1232.87	SLV 15	27.44	Si
ini.	2	-14470	-1412.61	1232.87	SLV 14	0.87	No
fin.	2	-5071	-174.95	1232.87	SLV 14	7.05	Si
ini.	2	538	328.52	1232.87	SLV 6	3.75	Si
fin.	2	-2479	-798.46	1232.87	SLV 6	1.54	Si
ini.	2	-10382	-1079.3	1232.87	SLV 11	1.14	Si
fin.	2	-2375	103.86	1232.87	SLV 11	11.87	Si
ini.	2	6055	878.03	1232.87	SLV 2	1.4	Si
fin.	2	-248	-739.53	1232.87	SLV 2	1.67	Si
ini.	2	538	328.52	1232.87	SLV 5	3.75	Si
fin.	2	-2479	-798.46	1232.87	SLV 5	1.54	Si

Verifiche a taglio delle travi in muratura secondo §C8.7.1.3.1 in combinazioni sismiche

Sezione	γM	N	M	V	Vt	Vp	Vt fess. diag.	Vt,lim	Comb.	c.s.	Verifica
ini.	2	-10382	-1079.3	15352			3808	1154	SLV 11	0.08	No
fin.	2	-2375	103.86	-2282			1673	650	SLV 11	0.28	No
ini.	2	-10382	-1079.3	15352			3808	1154	SLV 12	0.08	No
fin.	2	-2375	103.86	-2282			1673	650	SLV 12	0.28	No
ini.	2	-15899	-1628.8	19262			5279	1399	SLV 15	0.07	No
fin.	2	-4606	44.94	-1587			2268	822	SLV 15	0.52	No
ini.	2	6055	878.03	1749			1040	0	SLV 1	0	No
fin.	2	-248	-739.53	-7763			1106	426	SLV 1	0.05	No
ini.	2	538	328.52	5659			1040	303	SLV 5	0.05	No
fin.	2	-2479	-798.46	-7068			1701	659	SLV 5	0.09	No
ini.	2	538	328.52	5659			1040	303	SLV 6	0.05	No
fin.	2	-2479	-798.46	-7068			1701	659	SLV 6	0.09	No
ini.	2	-15899	-1628.8	19262			5279	1399	SLV 16	0.07	No
fin.	2	-4606	44.94	-1587			2268	822	SLV 16	0.52	No
ini.	2	4627	661.84	3213			1040	0	SLV 3	0	No
fin.	2	217	-519.65	-6796			1040	358	SLV 3	0.05	No
ini.	2	4627	661.84	3213			1040	0	SLV 4	0	No
fin.	2	217	-519.65	-6796			1040	358	SLV 4	0.05	No
ini.	2	6055	878.03	1749			1040	0	SLV 2	0	No
fin.	2	-248	-739.53	-7763			1106	426	SLV 2	0.05	No

Tabella dei coefficienti di sicurezza minimi

Stato limite	Coeff.s.	Comb.	Verifica
PF_SLV	0.757	SLV 15	No
V_SLV	0	SLV 1	No
PF_SLU	1.401	SLU 83	Si
V_SLU	0.049	SLU 83	No

Trave di accoppiamento 22

Verifiche condotte secondo D.M. 17-01-18 (N.T.C.)

Dati geometrici

X ini.	Y ini.	Z ini.inf.	Z ini.sup.	H ini.	X fin.	Y fin.	Z fin.inf.	Z fin.sup	H fin.	Luce	Spessore	R. Trazione
-9.728	1.271	0.17	0.67	0.5	-9.728	2.201	0.17	0.67	0.5	0.93	0.3	30000

Caratteristiche del materiale

(Circolare 7 21-01-19 C8.5.I) Muratura in mattoni pieni e malta di calce LC2_Corti

fb_	fhk	fvk0	fhmedio	τ0	fv0	μ	ϕ	fvk,lim	E	G	FC
120000			172500	9000	20000	0.577	0.767	6500	320000000	128000000	1.2

Verifiche a pressoflessione delle travi in muratura in combinazioni non sismiche

Sezione	γM	N	M	Mu	Comb.	c.s.	Verifica
ini.	3	73	14.51	380.51	SLU 81	26.22	Si
fin.	3	459	-204.49	380.51	SLU 81	1.86	Si
ini.	3	73	14.07	380.51	SLU 82	27.05	Si
fin.	3	454	-201.83	380.51	SLU 82	1.89	Si
ini.	3	77	14.12	380.51	SLU 80	26.94	Si
fin.	3	466	-206.06	380.51	SLU 80	1.85	Si
ini.	3	77	14.13	380.51	SLU 78	26.92	Si
fin.	3	466	-206.02	380.51	SLU 78	1.85	Si
ini.	3	78	14.37	380.51	SLU 84	26.49	Si
fin.	3	471	-209.13	380.51	SLU 84	1.82	Si
ini.	3	72	14.28	380.51	SLU 74	26.64	Si
fin.	3	454	-201.38	380.51	SLU 74	1.89	Si
ini.	3	72	13.84	380.51	SLU 75	27.5	Si
fin.	3	449	-198.72	380.51	SLU 75	1.91	Si
ini.	3	78	14.81	380.51	SLU 83	25.69	Si
fin.	3	476	-211.79	380.51	SLU 83	1.8	Si
ini.	3	77	14.57	380.51	SLU 79	26.12	Si
fin.	3	471	-208.72	380.51	SLU 79	1.82	Si
ini.	3	77	14.58	380.51	SLU 77	26.1	Si
fin.	3	471	-208.68	380.51	SLU 77	1.82	Si

Verifiche a taglio delle travi in muratura secondo §C8.7.1.3.1 in combinazioni non sismiche

Sezione	γM	N	M	V	Vt	Vp	Vt fess. diag.	Vt,lim	Comb.	c.s.	Verifica
ini.	3	72	13.84	-135			385	134	SLU 75	0.99	No
fin.	3	449	-198.72	262			385	46	SLU 75	0.18	No
ini.	3	78	14.81	-152			385	133	SLU 83	0.88	No
fin.	3	476	-211.79	274			385	32	SLU 83	0.12	No
ini.	3	73	14.07	-139			385	134	SLU 82	0.96	No
fin.	3	454	-201.83	279			385	44	SLU 82	0.16	No

Sezione	γM	N	M	V	Vt	Vp	Vt fess. diag.	Vt,lim	Comb.	c.s.	Verifica
ini.	3	77	14.12	-144			385	133	SLU 80	0.93	No
fin.	3	466	-206.06	250			385	38	SLU 80	0.15	No
ini.	3	77	14.58	-148			385	133	SLU 77	0.9	No
fin.	3	471	-208.68	257			385	35	SLU 77	0.14	No
ini.	3	72	14.28	-139			385	134	SLU 74	0.96	No
fin.	3	454	-201.38	262			385	44	SLU 74	0.17	No
ini.	3	77	14.57	-148			385	133	SLU 79	0.9	No
fin.	3	471	-208.72	250			385	35	SLU 79	0.14	No
ini.	3	78	14.37	-148			385	133	SLU 84	0.9	No
fin.	3	471	-209.13	274			385	35	SLU 84	0.13	No
ini.	3	77	14.13	-144			385	133	SLU 78	0.93	No
fin.	3	466	-206.02	257			385	38	SLU 78	0.15	No
ini.	3	73	14.51	-143			385	134	SLU 81	0.94	No
fin.	3	459	-204.49	279			385	41	SLU 81	0.15	No

Verifiche a pressoflessione delle travi in muratura in combinazioni sismiche

Sezione	γM	N	M	Mu	Comb.	c.s.	Verifica
ini.	2	-16	162.94	570.77	SLV 4	3.5	Si
fin.	2	1130	-674.36	570.77	SLV 4	0.85	No
ini.	2	1722	-674.69	570.77	SLV 9	0.85	No
fin.	2	-698	730.72	570.77	SLV 9	0.78	No
ini.	2	1722	-674.69	570.77	SLV 10	0.85	No
fin.	2	-698	730.72	570.77	SLV 10	0.78	No
ini.	2	-1636	694.67	570.77	SLV 7	0.82	No
fin.	2	1309	-998.89	570.77	SLV 7	0.57	No
ini.	2	-1929	729.25	570.77	SLV 11	0.78	No
fin.	2	965	-813.72	570.77	SLV 11	0.7	No
ini.	2	-1636	694.67	570.77	SLV 8	0.82	No
fin.	2	1309	-998.89	570.77	SLV 8	0.57	No
ini.	2	2015	-709.28	570.77	SLV 6	0.8	No
fin.	2	-353	545.56	570.77	SLV 6	1.05	Si
ini.	2	-1929	729.25	570.77	SLV 12	0.78	No
fin.	2	965	-813.72	570.77	SLV 12	0.7	No
ini.	2	-16	162.94	570.77	SLV 3	3.5	Si
fin.	2	1130	-674.36	570.77	SLV 3	0.85	No
ini.	2	2015	-709.28	570.77	SLV 5	0.8	No
fin.	2	-353	545.56	570.77	SLV 5	1.05	Si

Verifiche a taglio delle travi in muratura secondo §C8.7.1.3.1 in combinazioni sismiche

Sezione	γM	N	M	V	Vt	Vp	Vt fess. diag.	Vt,lim	Comb.	c.s.	Verifica
ini.	2	-16	162.94	-776			582	220	SLV 3	0.28	No
fin.	2	1130	-674.36	-649			578	0	SLV 3	0	No
ini.	2	-1636	694.67	-1245			1014	388	SLV 8	0.31	No
fin.	2	1309	-998.89	-933			578	0	SLV 8	0	No
ini.	2	1079	-258.25	-146			578	0	SLV 2	0	No
fin.	2	631	-211.03	-85			578	86	SLV 2	1.02	Si
ini.	2	1722	-674.69	1082			578	0	SLV 10	0	No
fin.	2	-698	730.72	1265			764	302	SLV 10	0.24	No
ini.	2	-16	162.94	-776			582	220	SLV 4	0.28	No
fin.	2	1130	-674.36	-649			578	0	SLV 4	0	No
ini.	2	2015	-709.28	855			578	0	SLV 6	0	No
fin.	2	-353	545.56	945			672	264	SLV 6	0.28	No
ini.	2	1079	-258.25	-146			578	0	SLV 1	0	No
fin.	2	631	-211.03	-85			578	86	SLV 1	1.02	Si
ini.	2	1722	-674.69	1082			578	0	SLV 9	0	No
fin.	2	-698	730.72	1265			764	302	SLV 9	0.24	No
ini.	2	-1636	694.67	-1245			1014	388	SLV 7	0.31	No
fin.	2	1309	-998.89	-933			578	0	SLV 7	0	No
ini.	2	2015	-709.28	855			578	0	SLV 5	0	No
fin.	2	-353	545.56	945			672	264	SLV 5	0.28	No

Tabella dei coefficienti di sicurezza minimi

Stato limite	Coeff.s.	Comb.	Verifica
PF_SLV	0.571	SLV 7	No
V_SLV	0	SLV 1	No
PF_SLU	1.797	SLU 83	Si
V_SLU	0.116	SLU 83	No

Trave di accoppiamento 23

Verifiche condotte secondo D.M. 17-01-18 (N.T.C.)

Dati geometrici

X ini.	Y ini.	Z ini.inf.	Z ini.sup.	H ini.	X fin.	Y fin.	Z fin.inf.	Z fin.sup	H fin.	Luce	Spessore	R. Trazione
-10.553	-3.284	0.02	0.67	0.65	-8.253	-3.284	0.02	0.67	0.65	2.3	0.45	30000

Caratteristiche del materiale

(Circolare 7 21-01-19 C8.5.I) Muratura in mattoni pieni e malta di calce LC2_Corti

fb_	fhk	fvk0	fhmedio	τ0	fv0	μ	ϕ	fvk,lim	E	G	FC
120000			172500	9000	20000	0.577	0.767	6500	320000000	128000000	1.2

Verifiche a pressoflessione delle travi in muratura in combinazioni non sismiche

Sezione	γM	N	M	Mu	Comb.	c.s.	Verifica
ini.	3	-19	-1038.06	964.6	SLU 84	0.93	No
fin.	3	792	-1099.76	964.6	SLU 84	0.88	No
ini.	3	-82	-1039.3	964.6	SLU 81	0.93	No
fin.	3	859	-1035.61	964.6	SLU 81	0.93	No

Sezione	γM	N	M	Mu	Comb.	c.s.	Verifica
ini.	3	26	-971.59	964.6	SLU 73	0.99	No
fin.	3	682	-1080.51	964.6	SLU 73	0.89	No
ini.	3	-82	-1048.57	964.6	SLU 83	0.92	No
fin.	3	867	-1043.2	964.6	SLU 83	0.92	No
ini.	3	-19	-939.14	964.6	SLU 63	1.03	Si
fin.	3	663	-1021.4	964.6	SLU 63	0.94	No
ini.	3	-16	-997.13	964.6	SLU 80	0.97	No
fin.	3	750	-1057.99	964.6	SLU 80	0.91	No
ini.	3	-19	-1028.79	964.6	SLU 82	0.94	No
fin.	3	783	-1092.16	964.6	SLU 82	0.88	No
ini.	3	-17	-1001.41	964.6	SLU 78	0.96	No
fin.	3	757	-1059.12	964.6	SLU 78	0.91	No
ini.	3	26	-980.86	964.6	SLU 76	0.98	No
fin.	3	690	-1088.1	964.6	SLU 76	0.89	No
ini.	3	-17	-992.15	964.6	SLU 75	0.97	No
fin.	3	748	-1051.52	964.6	SLU 75	0.92	No

Verifiche a taglio delle travi in muratura secondo §C8.7.1.3.1 in combinazioni non sismiche

Sezione	γM	N	M	V	Vt	Vp	Vt fess. diag.	Vt,lim	Comb.	c.s.	Verifica
ini.	3	26	-980.86	5108			751	279	SLU 76	0.05	No
fin.	3	690	-1088.1	-2492			751	153	SLU 76	0.06	No
ini.	3	-16	-997.13	5176			755	285	SLU 80	0.06	No
fin.	3	750	-1057.99	-2480			751	136	SLU 80	0.05	No
ini.	3	-80	-1011.92	5226			772	294	SLU 77	0.06	No
fin.	3	833	-1002.56	-2446			751	108	SLU 77	0.04	No
ini.	3	-19	-1028.79	5323			756	285	SLU 82	0.05	No
fin.	3	783	-1092.16	-2594			751	125	SLU 82	0.05	No
ini.	3	-80	-1002.66	5178			772	294	SLU 74	0.06	No
fin.	3	824	-994.97	-2434			751	111	SLU 74	0.05	No
ini.	3	-17	-1001.41	5196			756	285	SLU 78	0.05	No
fin.	3	757	-1059.12	-2483			751	134	SLU 78	0.05	No
ini.	3	-82	-1039.3	5353			773	294	SLU 81	0.05	No
fin.	3	859	-1035.61	-2558			751	98	SLU 81	0.04	No
ini.	3	-82	-1048.57	5401			773	294	SLU 83	0.05	No
fin.	3	867	-1043.2	-2570			751	94	SLU 83	0.04	No
ini.	3	-19	-1038.06	5371			756	285	SLU 84	0.05	No
fin.	3	792	-1099.76	-2606			751	123	SLU 84	0.05	No
ini.	3	-80	-1007.64	5207			772	294	SLU 79	0.06	No
fin.	3	826	-1001.43	-2443			751	111	SLU 79	0.05	No

Verifiche a pressoflessione delle travi in muratura in combinazioni sismiche

Sezione	γM	N	M	Mu	Comb.	c.s.	Verifica
ini.	2	100	-1432.28	1446.91	SLV 2	1.01	Si
fin.	2	5568	823.2	1446.91	SLV 2	1.76	Si
ini.	2	1414	-1482.29	1446.91	SLV 4	0.98	No
fin.	2	4508	1356.62	1446.91	SLV 4	1.07	Si
ini.	2	-215	67.33	1446.91	SLV 16	21.49	Si
fin.	2	-4495	-2194.69	1446.91	SLV 16	0.66	No
ini.	2	-2492	-366.69	1446.91	SLV 9	3.95	Si
fin.	2	952	-2107.49	1446.91	SLV 9	0.69	No
ini.	2	100	-1432.28	1446.91	SLV 1	1.01	Si
fin.	2	5568	823.2	1446.91	SLV 1	1.76	Si
ini.	2	-1529	117.34	1446.91	SLV 13	12.33	Si
fin.	2	-3435	-2728.12	1446.91	SLV 13	0.53	No
ini.	2	1414	-1482.29	1446.91	SLV 3	0.98	No
fin.	2	4508	1356.62	1446.91	SLV 3	1.07	Si
ini.	2	-1529	117.34	1446.91	SLV 14	12.33	Si
fin.	2	-3435	-2728.12	1446.91	SLV 14	0.53	No
ini.	2	-2492	-366.69	1446.91	SLV 10	3.95	Si
fin.	2	952	-2107.49	1446.91	SLV 10	0.69	No
ini.	2	-215	67.33	1446.91	SLV 15	21.49	Si
fin.	2	-4495	-2194.69	1446.91	SLV 15	0.66	No

Verifiche a taglio delle travi in muratura secondo §C8.7.1.3.1 in combinazioni sismiche

Sezione	γM	N	M	V	Vt	Vp	Vt fess. diag.	Vt,lim	Comb.	c.s.	Verifica
ini.	2	1414	-1482.29	4709			1126	77	SLV 4	0.02	No
fin.	2	4508	1356.62	249			1126	0	SLV 4	0	No
ini.	2	100	-1432.28	5137			1126	409	SLV 2	0.08	No
fin.	2	5568	823.2	428			1126	0	SLV 2	0	No
ini.	2	-2003	-831.57	4679			1661	653	SLV 6	0.14	No
fin.	2	3653	-1042.09	-757			1126	0	SLV 6	0	No
ini.	2	2377	-998.27	3250			1126	0	SLV 8	0	No
fin.	2	120	735.99	-1354			1126	406	SLV 8	0.3	No
ini.	2	100	-1432.28	5137			1126	409	SLV 1	0.08	No
fin.	2	5568	823.2	428			1126	0	SLV 1	0	No
ini.	2	2377	-998.27	3250			1126	0	SLV 7	0	No
fin.	2	120	735.99	-1354			1126	406	SLV 7	0.3	No
ini.	2	1414	-1482.29	4709			1126	77	SLV 3	0.02	No
fin.	2	4508	1356.62	249			1126	0	SLV 3	0	No
ini.	2	1888	-533.38	2429			1126	0	SLV 11	0	No
fin.	2	-2581	-329.4	-2549			1815	705	SLV 11	0.28	No
ini.	2	-2003	-831.57	4679			1661	653	SLV 5	0.14	No
fin.	2	3653	-1042.09	-757			1126	0	SLV 5	0	No
ini.	2	1888	-533.38	2429			1126	0	SLV 12	0	No
fin.	2	-2581	-329.4	-2549			1815	705	SLV 12	0.28	No

Tabella dei coefficienti di sicurezza minimi

Stato limite	Coeff.s.	Comb.	Verifica
PF_SLV	0.53	SLV 13	No
V_SLV	0	SLV 1	No

Stato limite	Coeff.s.	Comb.	Verifica
PF_SLU	0.877	SLU 84	No
V_SLU	0.037	SLU 83	No

Trave di accoppiamento 24

Verifiche condotte secondo D.M. 17-01-18 (N.T.C.)

Dati geometrici

X ini.	Y ini.	Z ini.inf.	Z ini.sup.	H ini.	X fin.	Y fin.	Z fin.inf.	Z fin.sup	H fin.	Luce	Spessore	R. Trazione
-5.177	1.271	0.07	0.67	0.6	-5.177	2.271	0.07	0.67	0.6	1	0.3	30000

Caratteristiche del materiale

(Circolare 7 21-01-19 C8.5.I) Muratura in mattoni pieni e malta di calce LC2_Corti

fb_	fhk	fvk0	fhmedio	τ0	fv0	μ	ϕ	fvk,lim	E	G	FC
120000			172500	9000	20000	0.577	0.767	6500	320000000	128000000	1.2

Verifiche a pressoflessione delle travi in muratura in combinazioni non sismiche

Sezione	γM	N	M	Mu	Comb.	c.s.	Verifica
ini.	3	293	148.22	547.94	SLU 84	3.7	Si
fin.	3	-772	-887.71	547.94	SLU 84	0.62	No
ini.	3	295	147.86	547.94	SLU 81	3.71	Si
fin.	3	-763	-883.26	547.94	SLU 81	0.62	No
ini.	3	298	147.17	547.94	SLU 77	3.72	Si
fin.	3	-748	-868.9	547.94	SLU 77	0.63	No
ini.	3	295	146.09	547.94	SLU 79	3.75	Si
fin.	3	-744	-863.18	547.94	SLU 79	0.63	No
ini.	3	288	145.68	547.94	SLU 82	3.76	Si
fin.	3	-756	-873.33	547.94	SLU 82	0.63	No
ini.	3	300	150.4	547.94	SLU 83	3.64	Si
fin.	3	-779	-897.64	547.94	SLU 83	0.61	No
ini.	3	288	143.91	547.94	SLU 80	3.81	Si
fin.	3	-737	-853.25	547.94	SLU 80	0.64	No
ini.	3	286	142.45	547.94	SLU 75	3.85	Si
fin.	3	-726	-844.6	547.94	SLU 75	0.65	No
ini.	3	291	144.99	547.94	SLU 78	3.78	Si
fin.	3	-741	-858.97	547.94	SLU 78	0.64	No
ini.	3	293	144.63	547.94	SLU 74	3.79	Si
fin.	3	-733	-854.52	547.94	SLU 74	0.64	No

Verifiche a taglio delle travi in muratura secondo §C8.7.1.3.1 in combinazioni non sismiche

Sezione	γM	N	M	V	Vt	Vp	Vt fess. diag.	Vt,lim	Comb.	c.s.	Verifica
ini.	3	298	147.17	924			462	123	SLU 77	0.13	No
fin.	3	-748	-868.9	-2435			662	261	SLU 77	0.11	No
ini.	3	293	144.63	909			462	124	SLU 74	0.14	No
fin.	3	-733	-854.52	-2399			657	259	SLU 74	0.11	No
ini.	3	300	150.4	937			462	123	SLU 83	0.13	No
fin.	3	-779	-897.64	-2488			670	264	SLU 83	0.11	No
ini.	3	288	145.68	906			462	125	SLU 82	0.14	No
fin.	3	-756	-873.33	-2425			664	261	SLU 82	0.11	No
ini.	3	293	148.22	922			462	124	SLU 84	0.13	No
fin.	3	-772	-887.71	-2461			668	263	SLU 84	0.11	No
ini.	3	286	142.45	894			462	126	SLU 75	0.14	No
fin.	3	-726	-844.6	-2372			656	259	SLU 75	0.11	No
ini.	3	288	143.91	901			462	125	SLU 80	0.14	No
fin.	3	-737	-853.25	-2389			659	260	SLU 80	0.11	No
ini.	3	295	147.86	921			462	124	SLU 81	0.13	No
fin.	3	-763	-883.26	-2453			666	262	SLU 81	0.11	No
ini.	3	291	144.99	909			462	125	SLU 78	0.14	No
fin.	3	-741	-858.97	-2407			660	260	SLU 78	0.11	No
ini.	3	295	146.09	916			462	124	SLU 79	0.14	No
fin.	3	-744	-863.18	-2417			661	260	SLU 79	0.11	No

Verifiche a pressoflessione delle travi in muratura in combinazioni sismiche

Sezione	γM	N	M	Mu	Comb.	c.s.	Verifica
ini.	2	-1648	733.28	821.91	SLV 12	1.12	Si
fin.	2	-3762	-2423.82	821.91	SLV 12	0.34	No
ini.	2	2215	-521.7	821.91	SLV 10	1.58	Si
fin.	2	1992	1152.69	821.91	SLV 10	0.71	No
ini.	2	-1814	716.91	821.91	SLV 8	1.15	Si
fin.	2	-2932	-2282.17	821.91	SLV 8	0.36	No
ini.	2	-1814	716.91	821.91	SLV 7	1.15	Si
fin.	2	-2932	-2282.17	821.91	SLV 7	0.36	No
ini.	2	2049	-538.07	821.91	SLV 5	1.53	Si
fin.	2	2821	1294.34	821.91	SLV 5	0.64	No
ini.	2	-103	313.13	821.91	SLV 15	2.62	Si
fin.	2	-2716	-1337.3	821.91	SLV 15	0.61	No
ini.	2	2049	-538.07	821.91	SLV 6	1.53	Si
fin.	2	2821	1294.34	821.91	SLV 6	0.64	No
ini.	2	-103	313.13	821.91	SLV 16	2.62	Si
fin.	2	-2716	-1337.3	821.91	SLV 16	0.61	No
ini.	2	-1648	733.28	821.91	SLV 11	1.12	Si
fin.	2	-3762	-2423.82	821.91	SLV 11	0.34	No
ini.	2	2215	-521.7	821.91	SLV 9	1.58	Si
fin.	2	1992	1152.69	821.91	SLV 9	0.71	No

Verifiche a taglio delle travi in muratura secondo §C8.7.1.3.1 in combinazioni sismiche

Sezione	γM	N	M	V	Vt	Vp	Vt fess. diag.	Vt,lim	Comb.	c.s.	Verifica
ini.	2	1056	-63.36	891			693	0	SLV 14	0	No
fin.	2	-990	-264.34	-1598			957	378	SLV 14	0.24	No
ini.	2	1056	-63.36	891			693	0	SLV 13	0	No
fin.	2	-990	-264.34	-1598			957	378	SLV 13	0.24	No
ini.	2	-655	258.57	351			868	343	SLV 4	0.98	No
fin.	2	49	-865.14	-1664			693	254	SLV 4	0.15	No
ini.	2	2215	-521.7	721			693	0	SLV 9	0	No
fin.	2	1992	1152.69	-33			693	0	SLV 9	0	No
ini.	2	504	-117.92	363			693	173	SLV 1	0.48	No
fin.	2	1775	207.81	-617			693	0	SLV 1	0	No
ini.	2	2215	-521.7	721			693	0	SLV 10	0	No
fin.	2	1992	1152.69	-33			693	0	SLV 10	0	No
ini.	2	-655	258.57	351			868	343	SLV 3	0.98	No
fin.	2	49	-865.14	-1664			693	254	SLV 3	0.15	No
ini.	2	504	-117.92	363			693	173	SLV 2	0.48	No
fin.	2	1775	207.81	-617			693	0	SLV 2	0	No
ini.	2	2049	-538.07	563			693	0	SLV 5	0	No
fin.	2	2821	1294.34	261			693	0	SLV 5	0	No
ini.	2	2049	-538.07	563			693	0	SLV 6	0	No
fin.	2	2821	1294.34	261			693	0	SLV 6	0	No

Tabella dei coefficienti di sicurezza minimi

Stato limite	Coeff.s.	Comb.	Verifica
PF_SLV	0.339	SLV 11	No
V_SLV	0	SLV 1	No
PF_SLU	0.61	SLU 83	No
V_SLU	0.106	SLU 83	No

Trave di accoppiamento 25

Verifiche condotte secondo D.M. 17-01-18 (N.T.C.)

Dati geometrici

X ini.	Y ini.	Z ini.inf.	Z ini.sup.	H ini.	X fin.	Y fin.	Z fin.inf.	Z fin.sup	H fin.	Luce	Spessore	R. Trazione
-7.463	-3.284	-2.03	-0.03	2	-6.463	-3.284	-2.03	-0.03	2	1	0.45	30000

Caratteristiche del materiale

(Circolare 7 21-01-19 C8.5.I) Muratura in mattoni pieni e malta di calce LC2_Corti

fb_	fhk	fvk0	fhmedio	τ0	fv0	μ	ϕ	fvk,lim	E	G	FC
120000			172500	9000	20000	0.577	0.767	6500	320000000	128000000	1.2

Verifiche a pressoflessione delle travi in muratura in combinazioni non sismiche

Sezione	γM	N	M	Mu	Comb.	c.s.	Verifica
ini.	3	-4800	-1907.51	9132.35	SLU 62	4.79	Si
fin.	3	-4761	-2039.12	9132.35	SLU 62	4.48	Si
ini.	3	-5000	-2063.13	9132.35	SLU 79	4.43	Si
fin.	3	-4976	-2166.4	9132.35	SLU 79	4.22	Si
ini.	3	-5184	-2114.7	9132.35	SLU 83	4.32	Si
fin.	3	-5136	-2245.34	9132.35	SLU 83	4.07	Si
ini.	3	-5147	-2089.82	9132.35	SLU 81	4.37	Si
fin.	3	-5097	-2222.5	9132.35	SLU 81	4.11	Si
ini.	3	-4763	-1882.64	9132.35	SLU 60	4.85	Si
fin.	3	-4722	-2016.28	9132.35	SLU 60	4.53	Si
ini.	3	-4974	-2056.73	9132.35	SLU 74	4.44	Si
fin.	3	-4956	-2153.83	9132.35	SLU 74	4.24	Si
ini.	3	-4628	-1874.41	9132.35	SLU 56	4.87	Si
fin.	3	-4619	-1970.46	9132.35	SLU 56	4.63	Si
ini.	3	-4590	-1849.54	9132.35	SLU 53	4.94	Si
fin.	3	-4580	-1947.62	9132.35	SLU 53	4.69	Si
ini.	3	-4616	-1855.94	9132.35	SLU 58	4.92	Si
fin.	3	-4600	-1960.19	9132.35	SLU 58	4.66	Si
ini.	3	-5012	-2081.6	9132.35	SLU 77	4.39	Si
fin.	3	-4995	-2176.67	9132.35	SLU 77	4.2	Si

Verifiche a taglio delle travi in muratura secondo §C8.7.1.3.1 in combinazioni non sismiche

Sezione	γM	N	M	V	Vt	Vp	Vt fess. diag.	Vt,lim	Comb.	c.s.	Verifica
ini.	3	-5720	-1905.26	-7146			5754	2224	SLU 84	0.31	No
fin.	3	-5976	-1845.97	10782			5856	2256	SLU 84	0.21	No
ini.	3	-5818	-1664.32	-6514			5793	2236	SLU 73	0.34	No
fin.	3	-6298	-1455.1	10872			5985	2296	SLU 73	0.21	No
ini.	3	-5683	-1880.39	-7075			5739	2219	SLU 82	0.31	No
fin.	3	-5937	-1823.12	10680			5841	2251	SLU 82	0.21	No
ini.	3	-5548	-1872.16	-6869			5685	2202	SLU 78	0.32	No
fin.	3	-5835	-1777.3	10581			5800	2238	SLU 78	0.21	No
ini.	3	-5012	-2081.6	-7153			5471	2132	SLU 77	0.3	No
fin.	3	-4995	-2176.67	9746			5464	2129	SLU 77	0.22	No
ini.	3	-5855	-1689.2	-6586			5808	2241	SLU 76	0.34	No
fin.	3	-6337	-1477.94	10973			6001	2301	SLU 76	0.21	No
ini.	3	-5536	-1853.69	-6847			5680	2200	SLU 80	0.32	No
fin.	3	-5816	-1767.03	10518			5792	2236	SLU 80	0.21	No
ini.	3	-5184	-2114.7	-7430			5540	2154	SLU 83	0.29	No
fin.	3	-5136	-2245.34	9947			5520	2148	SLU 83	0.22	No
ini.	3	-5147	-2089.82	-7359			5525	2149	SLU 81	0.29	No
fin.	3	-5097	-2222.5	9845			5505	2143	SLU 81	0.22	No
ini.	3	-5510	-1847.29	-6797			5670	2197	SLU 75	0.32	No

Sezione	γM	N	M	V	Vt	Vp	Vt fess. diag.	Vt,lim	Comb.	c.s.	Verifica
fin.	3	-5796	-1754.46	10479			5784	2233	SLU 75	0.21	No

Verifiche a pressoflessione delle travi in muratura in combinazioni sismiche

Sezione	γM	N	M	Mu	Comb.	c.s.	Verifica
ini.	2	-2272	-6343.38	13698.53	SLV 6	2.16	Si
fin.	2	-7696	412.51	13698.53	SLV 6	33.21	Si
ini.	2	1579	-9452.84	13698.53	SLV 1	1.45	Si
fin.	2	-5264	39.86	13698.53	SLV 1	343.63	Si
ini.	2	-8485	6618.87	13698.53	SLV 15	2.07	Si
fin.	2	-1657	-2982.21	13698.53	SLV 15	4.59	Si
ini.	2	1579	-9452.84	13698.53	SLV 2	1.45	Si
fin.	2	-5264	39.86	13698.53	SLV 2	343.63	Si
ini.	2	-8701	4960.2	13698.53	SLV 13	2.76	Si
fin.	2	-4093	-2039.11	13698.53	SLV 13	6.72	Si
ini.	2	-2272	-6343.38	13698.53	SLV 5	2.16	Si
fin.	2	-7696	412.51	13698.53	SLV 5	33.21	Si
ini.	2	1796	-7794.17	13698.53	SLV 3	1.76	Si
fin.	2	-2829	-903.24	13698.53	SLV 3	15.17	Si
ini.	2	-8701	4960.2	13698.53	SLV 14	2.76	Si
fin.	2	-4093	-2039.11	13698.53	SLV 14	6.72	Si
ini.	2	-8485	6618.87	13698.53	SLV 16	2.07	Si
fin.	2	-1657	-2982.21	13698.53	SLV 16	4.59	Si
ini.	2	1796	-7794.17	13698.53	SLV 4	1.76	Si
fin.	2	-2829	-903.24	13698.53	SLV 4	15.17	Si

Verifiche a taglio delle travi in muratura secondo §C8.7.1.3.1 in combinazioni sismiche

Sezione	γM	N	M	V	Vt	Vp	Vt fess. diag.	Vt,lim	Comb.	c.s.	Verifica
ini.	2	-2272	-6343.38	-1286			6108	2400	SLV 5	1.87	Si
fin.	2	-7696	412.51	17844			8277	3221	SLV 5	0.18	No
ini.	2	-8485	6618.87	-17277			8593	3323	SLV 15	0.19	No
fin.	2	-1657	-2982.21	-10029			5862	2289	SLV 15	0.23	No
ini.	2	-8701	4960.2	-17419			8680	3351	SLV 14	0.19	No
fin.	2	-4093	-2039.11	-5987			6836	2704	SLV 14	0.45	No
ini.	2	1579	-9452.84	7654			5199	1576	SLV 2	0.21	No
fin.	2	-5264	39.86	23421			7305	2882	SLV 2	0.12	No
ini.	2	1796	-7794.17	7796			5199	1517	SLV 4	0.19	No
fin.	2	-2829	-903.24	19378			6331	2497	SLV 4	0.13	No
ini.	2	-8701	4960.2	-17419			8680	3351	SLV 13	0.19	No
fin.	2	-4093	-2039.11	-5987			6836	2704	SLV 13	0.45	No
ini.	2	-8485	6618.87	-17277			8593	3323	SLV 16	0.19	No
fin.	2	-1657	-2982.21	-10029			5862	2289	SLV 16	0.23	No
ini.	2	-2272	-6343.38	-1286			6108	2400	SLV 6	1.87	Si
fin.	2	-7696	412.51	17844			8277	3221	SLV 6	0.18	No
ini.	2	1579	-9452.84	7654			5199	1576	SLV 1	0.21	No
fin.	2	-5264	39.86	23421			7305	2882	SLV 1	0.12	No
ini.	2	1796	-7794.17	7796			5199	1517	SLV 3	0.19	No
fin.	2	-2829	-903.24	19378			6331	2497	SLV 3	0.13	No

Tabella dei coefficienti di sicurezza minimi

Stato limite	Coeff.s.	Comb.	Verifica
PF_SLV	1.449	SLV 1	Si
V_SLV	0.123	SLV 1	No
PF_SLU	4.067	SLU 83	Si
V_SLU	0.209	SLU 84	No

Trave di accoppiamento 26

Verifiche condotte secondo D.M. 17-01-18 (N.T.C.)

Dati geometrici

X ini.	Y ini.	Z ini.inf.	Z ini.sup.	H ini.	X fin.	Y fin.	Z fin.inf.	Z fin.sup	H fin.	Luce	Spessore	R. Trazione
-7.463	-3.284	0.37	0.67	0.3	-6.463	-3.284	0.37	0.67	0.3	1	0.45	30000

Caratteristiche del materiale

(Circolare 7 21-01-19 C8.5.I) Muratura in mattoni pieni e malta di calce LC2_Corti

fb_	fhk	fvk0	fhmedio	τ0	fv0	μ	ϕ	fvk,lim	E	G	FC
120000			172500	9000	20000	0.577	0.767	6500	320000000	128000000	1.2

Verifiche a pressoflessione delle travi in muratura in combinazioni non sismiche

Sezione	γM	N	M	Mu	Comb.	c.s.	Verifica
ini.	3	1924	-810.58	205.48	SLU 75	0.25	No
fin.	3	992	-209.78	205.48	SLU 75	0.98	No
ini.	3	2230	-828.85	205.48	SLU 77	0.25	No
fin.	3	1508	-183.78	205.48	SLU 77	1.12	Si
ini.	3	1945	-820.1	205.48	SLU 78	0.25	No
fin.	3	1010	-210.91	205.48	SLU 78	0.97	No
ini.	3	1935	-815.49	205.48	SLU 80	0.25	No
fin.	3	999	-210.79	205.48	SLU 80	0.97	No
ini.	3	2221	-824.23	205.48	SLU 79	0.25	No
fin.	3	1497	-183.65	205.48	SLU 79	1.12	Si
ini.	3	2209	-819.32	205.48	SLU 74	0.25	No
fin.	3	1491	-182.65	205.48	SLU 74	1.12	Si
ini.	3	2320	-848.19	205.48	SLU 83	0.24	No
fin.	3	1551	-193.36	205.48	SLU 83	1.06	Si
ini.	3	2034	-839.44	205.48	SLU 84	0.24	No
fin.	3	1053	-220.5	205.48	SLU 84	0.93	No
ini.	3	2013	-829.91	205.48	SLU 82	0.25	No

Sezione	γM	N	M	Mu	Comb.	c.s.	Verifica
fin.	3	1035	-219.37	205.48	SLU 82	0.94	No
ini.	3	2299	-838.66	205.48	SLU 81	0.25	No
fin.	3	1534	-192.23	205.48	SLU 81	1.07	Si

Verifiche a taglio delle travi in muratura secondo §C8.7.1.3.1 in combinazioni non sismiche

Sezione	γM	N	M	V	Vt	Vp	Vt fess. diag.	Vt,lim	Comb.	c.s.	Verifica
ini.	3	1779	-759.44	3130			347	0	SLU 61	0	No
fin.	3	869	-202.09	-2032			347	0	SLU 61	0	No
ini.	3	1690	-740.1	3041			347	0	SLU 54	0	No
fin.	3	826	-192.51	-1953			347	0	SLU 54	0	No
ini.	3	2065	-768.18	3207			347	0	SLU 60	0	No
fin.	3	1368	-174.96	-1945			347	0	SLU 60	0	No
ini.	3	1490	-729.65	2971			347	0	SLU 55	0	No
fin.	3	483	-210.47	-2003			347	0	SLU 55	0	No
ini.	3	1976	-748.85	3117			347	0	SLU 53	0	No
fin.	3	1325	-165.37	-1867			347	0	SLU 53	0	No
ini.	3	1701	-745.01	3060			347	0	SLU 59	0	No
fin.	3	833	-193.51	-1963			347	0	SLU 59	0	No
ini.	3	1987	-753.76	3136			347	0	SLU 58	0	No
fin.	3	1331	-166.38	-1877			347	0	SLU 58	0	No
ini.	3	1711	-749.63	3078			347	0	SLU 57	0	No
fin.	3	844	-193.64	-1970			347	0	SLU 57	0	No
ini.	3	1343	-523.65	2175			347	0	SLU 1	0	No
fin.	3	913	-111.34	-1282			347	0	SLU 1	0	No
ini.	3	1997	-758.37	3154			347	0	SLU 56	0	No
fin.	3	1342	-166.51	-1884			347	0	SLU 56	0	No

Verifiche a pressoflessione delle travi in muratura in combinazioni sismiche

Sezione	γM	N	M	Mu	Comb.	c.s.	Verifica
ini.	2	-1869	-1725.83	308.22	SLV 6	0.18	No
fin.	2	-1882	-875.1	308.22	SLV 6	0.35	No
ini.	2	348	-702.83	308.22	SLV 13	0.44	No
fin.	2	-4052	-902	308.22	SLV 13	0.34	No
ini.	2	593	-1090.34	308.22	SLV 2	0.28	No
fin.	2	3642	112.71	308.22	SLV 2	2.73	Si
ini.	2	-1869	-1725.83	308.22	SLV 5	0.18	No
fin.	2	-1882	-875.1	308.22	SLV 5	0.35	No
ini.	2	593	-1090.34	308.22	SLV 1	0.28	No
fin.	2	3642	112.71	308.22	SLV 1	2.73	Si
ini.	2	4921	477.36	308.22	SLV 8	0.65	No
fin.	2	6206	932.51	308.22	SLV 8	0.33	No
ini.	2	-1943	-1609.57	308.22	SLV 9	0.19	No
fin.	2	-4190	-1179.52	308.22	SLV 9	0.26	No
ini.	2	-1943	-1609.57	308.22	SLV 10	0.19	No
fin.	2	-4190	-1179.52	308.22	SLV 10	0.26	No
ini.	2	348	-702.83	308.22	SLV 14	0.44	No
fin.	2	-4052	-902	308.22	SLV 14	0.34	No
ini.	2	4921	477.36	308.22	SLV 7	0.65	No
fin.	2	6206	932.51	308.22	SLV 7	0.33	No

Verifiche a taglio delle travi in muratura secondo §C8.7.1.3.1 in combinazioni sismiche

Sezione	γM	N	M	V	Vt	Vp	Vt fess. diag.	Vt,lim	Comb.	c.s.	Verifica
ini.	2	2385	-41.87	508			520	0	SLV 15	0	No
fin.	2	-1626	-359.72	-2852			953	361	SLV 15	0.13	No
ini.	2	4921	477.36	906			520	0	SLV 8	0	No
fin.	2	6206	932.51	612			520	0	SLV 8	0	No
ini.	2	2630	-429.39	3103			520	0	SLV 4	0	No
fin.	2	6068	655	913			520	0	SLV 4	0	No
ini.	2	4848	593.61	127			520	0	SLV 11	0	No
fin.	2	3898	628.1	-518			520	0	SLV 11	0	No
ini.	2	4921	477.36	906			520	0	SLV 7	0	No
fin.	2	6206	932.51	612			520	0	SLV 7	0	No
ini.	2	593	-1090.34	4208			520	68	SLV 1	0.02	No
fin.	2	3642	112.71	42			520	0	SLV 1	0	No
ini.	2	2630	-429.39	3103			520	0	SLV 3	0	No
fin.	2	6068	655	913			520	0	SLV 3	0	No
ini.	2	4848	593.61	127			520	0	SLV 12	0	No
fin.	2	3898	628.1	-518			520	0	SLV 12	0	No
ini.	2	2385	-41.87	508			520	0	SLV 16	0	No
fin.	2	-1626	-359.72	-2852			953	361	SLV 16	0.13	No
ini.	2	593	-1090.34	4208			520	68	SLV 2	0.02	No
fin.	2	3642	112.71	42			520	0	SLV 2	0	No

Tabella dei coefficienti di sicurezza minimi

Stato limite	Coeff.s.	Comb.	Verifica
PF_SLV	0.179	SLV 5	No
V_SLV	0	SLV 1	No
PF_SLU	0.242	SLU 83	No
V_SLU	0	SLU 1	No

Trave di accoppiamento 27

Verifiche condotte secondo D.M. 17-01-18 (N.T.C.)

Dati geometrici

X ini.	Y ini.	Z ini.inf.	Z ini.sup.	H ini.	X fin.	Y fin.	Z fin.inf.	Z fin.sup	H fin.	Luce	Spessore	R. Trazione
-3.233	-3.284	-2.03	-0.03	2	-2.233	-3.284	-2.03	-0.03	2	1	0.45	30000

Caratteristiche del materiale

(Circolare 7 21-01-19 C8.5.I) Muratura in mattoni pieni e malta di calce LC2_Corti

fb_	fhk	fvk0	fhmedio	τ0	fv0	μ	ϕ	fvk,lim	E	G	FC
120000			172500	9000	20000	0.577	0.767	6500	320000000	128000000	1.2

Verifiche a pressoflessione delle travi in muratura in combinazioni non sismiche

Sezione	γM	N	M	Mu	Comb.	c.s.	Verifica
ini.	3	-4729	-1054.72	9132.35	SLU 55	8.66	Si
fin.	3	-4584	-2063.64	9132.35	SLU 55	4.43	Si
ini.	3	-4668	-1057.71	9132.35	SLU 68	8.63	Si
fin.	3	-4540	-2037.7	9132.35	SLU 68	4.48	Si
ini.	3	-4095	-1007.3	9132.35	SLU 31	9.07	Si
fin.	3	-3937	-1972.71	9132.35	SLU 31	4.63	Si
ini.	3	-4171	-1007.36	9132.35	SLU 34	9.07	Si
fin.	3	-4016	-1980.57	9132.35	SLU 34	4.61	Si
ini.	3	-5270	-1082.79	9132.35	SLU 76	8.43	Si
fin.	3	-5141	-2151.6	9132.35	SLU 76	4.24	Si
ini.	3	-4653	-1054.66	9132.35	SLU 52	8.66	Si
fin.	3	-4505	-2055.77	9132.35	SLU 52	4.44	Si
ini.	3	-4051	-1029.58	9132.35	SLU 44	8.87	Si
fin.	3	-3904	-1941.87	9132.35	SLU 44	4.7	Si
ini.	3	-4127	-1029.64	9132.35	SLU 47	8.87	Si
fin.	3	-3984	-1949.74	9132.35	SLU 47	4.68	Si
ini.	3	-4592	-1057.64	9132.35	SLU 65	8.63	Si
fin.	3	-4461	-2029.83	9132.35	SLU 65	4.5	Si
ini.	3	-5193	-1082.72	9132.35	SLU 73	8.43	Si
fin.	3	-5061	-2143.73	9132.35	SLU 73	4.26	Si

Verifiche a taglio delle travi in muratura secondo §C8.7.1.3.1 in combinazioni non sismiche

Sezione	γM	N	M	V	Vt	Vp	Vt fess. diag.	Vt,lim	Comb.	c.s.	Verifica
ini.	3	-4592	-1057.64	-6867			5303	2075	SLU 65	0.3	No
fin.	3	-4461	-2029.83	3130			5250	2057	SLU 65	0.66	No
ini.	3	-4729	-1054.72	-7053			5358	2094	SLU 55	0.3	No
fin.	3	-4584	-2063.64	3187			5300	2074	SLU 55	0.65	No
ini.	3	-6058	-825.27	-7623			5889	2266	SLU 84	0.3	No
fin.	3	-6040	-1760.32	3994			5882	2264	SLU 84	0.57	No
ini.	3	-5982	-825.2	-7548			5859	2257	SLU 82	0.3	No
fin.	3	-5961	-1752.45	3943			5850	2254	SLU 82	0.57	No
ini.	3	-4653	-1054.66	-6978			5327	2083	SLU 52	0.3	No
fin.	3	-4505	-2055.77	3136			5268	2063	SLU 52	0.66	No
ini.	3	-5193	-1082.72	-7596			5543	2156	SLU 73	0.28	No
fin.	3	-5061	-2143.73	3544			5491	2138	SLU 73	0.6	No
ini.	3	-5876	-814.58	-7386			5816	2244	SLU 80	0.3	No
fin.	3	-5862	-1719.38	3868			5811	2242	SLU 80	0.58	No
ini.	3	-4668	-1057.71	-6942			5333	2085	SLU 68	0.3	No
fin.	3	-4540	-2037.7	3182			5282	2068	SLU 68	0.65	No
ini.	3	-5917	-816.79	-7419			5833	2249	SLU 78	0.3	No
fin.	3	-5908	-1721.06	3906			5829	2248	SLU 78	0.58	No
ini.	3	-5270	-1082.79	-7671			5574	2166	SLU 76	0.28	No
fin.	3	-5141	-2151.6	3595			5522	2149	SLU 76	0.6	No

Verifiche a pressoflessione delle travi in muratura in combinazioni sismiche

Sezione	γM	N	M	Mu	Comb.	c.s.	Verifica
ini.	2	-132	-4860.87	13698.53	SLV 2	2.82	Si
fin.	2	-4528	2539.32	13698.53	SLV 2	5.39	Si
ini.	2	-7706	-858.07	13698.53	SLV 10	15.96	Si
fin.	2	-3458	-5597.45	13698.53	SLV 10	2.45	Si
ini.	2	836	-3799.55	13698.53	SLV 3	3.61	Si
fin.	2	-5251	4679.99	13698.53	SLV 3	2.93	Si
ini.	2	-9078	4263.53	13698.53	SLV 16	3.21	Si
fin.	2	-4903	-3995.9	13698.53	SLV 16	3.43	Si
ini.	2	-9078	4263.53	13698.53	SLV 15	3.21	Si
fin.	2	-4903	-3995.9	13698.53	SLV 15	3.43	Si
ini.	2	-132	-4860.87	13698.53	SLV 1	2.82	Si
fin.	2	-4528	2539.32	13698.53	SLV 1	5.39	Si
ini.	2	-10046	3202.21	13698.53	SLV 13	4.28	Si
fin.	2	-4180	-6136.57	13698.53	SLV 13	2.23	Si
ini.	2	836	-3799.55	13698.53	SLV 4	3.61	Si
fin.	2	-5251	4679.99	13698.53	SLV 4	2.93	Si
ini.	2	-7706	-858.07	13698.53	SLV 9	15.96	Si
fin.	2	-3458	-5597.45	13698.53	SLV 9	2.45	Si
ini.	2	-10046	3202.21	13698.53	SLV 14	4.28	Si
fin.	2	-4180	-6136.57	13698.53	SLV 14	2.23	Si

Verifiche a taglio delle travi in muratura secondo §C8.7.1.3.1 in combinazioni sismiche

Sezione	γM	N	M	V	Vt	Vp	Vt fess. diag.	Vt,lim	Comb.	c.s.	Verifica
ini.	2	-10046	3202.21	-18607			9217	3518	SLV 13	0.19	No
fin.	2	-4180	-6136.57	-5781			6871	2717	SLV 13	0.47	No
ini.	2	836	-3799.55	9284			5199	1766	SLV 3	0.19	No
fin.	2	-5251	4679.99	11507			7300	2880	SLV 3	0.25	No
ini.	2	-7706	-858.07	-10552			8281	3222	SLV 9	0.31	No
fin.	2	-3458	-5597.45	2197			6582	2602	SLV 9	1.18	Si
ini.	2	-132	-4860.87	8159			5252	1985	SLV 1	0.24	No
fin.	2	-4528	2539.32	12778			7010	2771	SLV 1	0.22	No
ini.	2	-7706	-858.07	-10552			8281	3222	SLV 10	0.31	No
fin.	2	-3458	-5597.45	2197			6582	2602	SLV 10	1.18	Si
ini.	2	-10046	3202.21	-18607			9217	3518	SLV 14	0.19	No
fin.	2	-4180	-6136.57	-5781			6871	2717	SLV 14	0.47	No
ini.	2	-132	-4860.87	8159			5252	1985	SLV 2	0.24	No
fin.	2	-4528	2539.32	12778			7010	2771	SLV 2	0.22	No

Sezione	γM	N	M	V	Vt	Vp	Vt fess. diag.	Vt,lim	Comb.	c.s.	Verifica
ini.	2	-9078	4263.53	-17483			8830	3399	SLV 16	0.19	No
fin.	2	-4903	-3995.9	-7052			7160	2828	SLV 16	0.4	No
ini.	2	836	-3799.55	9284			5199	1766	SLV 4	0.19	No
fin.	2	-5251	4679.99	11507			7300	2880	SLV 4	0.25	No
ini.	2	-9078	4263.53	-17483			8830	3399	SLV 15	0.19	No
fin.	2	-4903	-3995.9	-7052			7160	2828	SLV 15	0.4	No

Tabella dei coefficienti di sicurezza minimi

Stato limite	Coeff.s.	Comb.	Verifica
PF_SLV	2.232	SLV 13	Si
V_SLV	0.189	SLV 13	No
PF_SLU	4.244	SLU 76	Si
V_SLU	0.282	SLU 76	No

Trave di accoppiamento 28

Verifiche condotte secondo D.M. 17-01-18 (N.T.C.)

Dati geometrici

X ini.	Y ini.	Z ini.inf.	Z ini.sup.	H ini.	X fin.	Y fin.	Z fin.inf.	Z fin.sup	H fin.	Luce	Spessore	R. Trazione
-3.233	-3.284	0.37	0.67	0.3	-2.233	-3.284	0.37	0.67	0.3	1	0.45	30000

Caratteristiche del materiale

(Circolare 7 21-01-19 C8.5.I) Muratura in mattoni pieni e malta di calce LC2_Corti

fb_	fhk	fvk0	fhmedio	τ0	fv0	μ	ϕ	fvk,lim	E	G	FC
120000			172500	9000	20000	0.577	0.767	6500	320000000	128000000	1.2

Verifiche a pressoflessione delle travi in muratura in combinazioni non sismiche

Sezione	γM	N	M	Mu	Comb.	c.s.	Verifica
ini.	3	1145	-318.92	205.48	SLU 78	0.64	No
fin.	3	1022	-389.4	205.48	SLU 78	0.53	No
ini.	3	1609	-294.52	205.48	SLU 52	0.7	No
fin.	3	1394	-387.71	205.48	SLU 52	0.53	No
ini.	3	1642	-325.72	205.48	SLU 76	0.63	No
fin.	3	1422	-423.98	205.48	SLU 76	0.48	No
ini.	3	1160	-327.77	205.48	SLU 84	0.63	No
fin.	3	1029	-401.58	205.48	SLU 84	0.51	No
ini.	3	1611	-297.28	205.48	SLU 55	0.69	No
fin.	3	1396	-391.01	205.48	SLU 55	0.53	No
ini.	3	1157	-325.01	205.48	SLU 82	0.63	No
fin.	3	1027	-398.28	205.48	SLU 82	0.52	No
ini.	3	1145	-317.01	205.48	SLU 80	0.65	No
fin.	3	1020	-387.91	205.48	SLU 80	0.53	No
ini.	3	1142	-316.16	205.48	SLU 75	0.65	No
fin.	3	1020	-386.1	205.48	SLU 75	0.53	No
ini.	3	1601	-294.16	205.48	SLU 68	0.7	No
fin.	3	1397	-384.35	205.48	SLU 68	0.53	No
ini.	3	1639	-322.95	205.48	SLU 73	0.64	No
fin.	3	1420	-420.68	205.48	SLU 73	0.49	No

Verifiche a taglio delle travi in muratura secondo §C8.7.1.3.1 in combinazioni non sismiche

Sezione	γM	N	M	V	Vt	Vp	Vt fess. diag.	Vt,lim	Comb.	c.s.	Verifica
ini.	3	1092	-278.44	1489			347	0	SLU 40	0	No
fin.	3	951	-349.37	-1679			347	0	SLU 40	0	No
ini.	3	1079	-272.36	1457			347	0	SLU 36	0	No
fin.	3	946	-340.5	-1639			347	0	SLU 36	0	No
ini.	3	1571	-265.72	1454			347	0	SLU 47	0	No
fin.	3	1370	-351.38	-1694			347	0	SLU 47	0	No
ini.	3	1568	-262.96	1440			347	0	SLU 44	0	No
fin.	3	1369	-348.07	-1678			347	0	SLU 44	0	No
ini.	3	1094	-281.2	1503			347	0	SLU 42	0	No
fin.	3	953	-352.68	-1694			347	0	SLU 42	0	No
ini.	3	1071	-256.17	1386			347	0	SLU 46	0	No
fin.	3	968	-313.49	-1537			347	0	SLU 46	0	No
ini.	3	1074	-257.01	1391			347	0	SLU 51	0	No
fin.	3	968	-315.3	-1545			347	0	SLU 51	0	No
ini.	3	1079	-270.44	1448			347	0	SLU 38	0	No
fin.	3	944	-339	-1631			347	0	SLU 38	0	No
ini.	3	1073	-258.93	1400			347	0	SLU 49	0	No
fin.	3	970	-316.8	-1552			347	0	SLU 49	0	No
ini.	3	1576	-279.15	1511			347	0	SLU 34	0	No
fin.	3	1346	-375.08	-1780			347	0	SLU 34	0	No

Verifiche a pressoflessione delle travi in muratura in combinazioni sismiche

Sezione	γM	N	M	Mu	Comb.	c.s.	Verifica
ini.	2	3517	386.16	308.22	SLV 14	0.8	No
fin.	2	-609	-955.86	308.22	SLV 14	0.32	No
ini.	2	5444	-4.69	308.22	SLV 10	65.76	Si
fin.	2	3582	-567.21	308.22	SLV 10	0.54	No
ini.	2	-201	-780.81	308.22	SLV 2	0.39	No
fin.	2	3549	430.26	308.22	SLV 2	0.72	No
ini.	2	5444	-4.69	308.22	SLV 9	65.76	Si
fin.	2	3582	-567.21	308.22	SLV 9	0.54	No
ini.	2	-2968	-795.88	308.22	SLV 4	0.39	No
fin.	2	1204	512.97	308.22	SLV 4	0.6	No
ini.	2	-2968	-795.88	308.22	SLV 3	0.39	No
fin.	2	1204	512.97	308.22	SLV 3	0.6	No

Sezione	γM	N	M	Mu	Comb.	c.s.	Verifica
ini.	2	750	371.09	308.22	SLV 16	0.83	No
fin.	2	-2954	-873.15	308.22	SLV 16	0.35	No
ini.	2	-201	-780.81	308.22	SLV 1	0.39	No
fin.	2	3549	430.26	308.22	SLV 1	0.72	No
ini.	2	3517	386.16	308.22	SLV 13	0.8	No
fin.	2	-609	-955.86	308.22	SLV 13	0.32	No
ini.	2	750	371.09	308.22	SLV 15	0.83	No
fin.	2	-2954	-873.15	308.22	SLV 15	0.35	No

Verifiche a taglio delle travi in muratura secondo §C8.7.1.3.1 in combinazioni sismiche

Sezione	γM	N	M	V	Vt	Vp	Vt fess. diag.	Vt,lim	Comb.	c.s.	Verifica
ini.	2	3517	386.16	-685			520	0	SLV 14	0	No
fin.	2	-609	-955.86	-3203			682	270	SLV 14	0.08	No
ini.	2	5444	-4.69	1143			520	0	SLV 10	0	No
fin.	2	3582	-567.21	-2286			520	0	SLV 10	0	No
ini.	2	5444	-4.69	1143			520	0	SLV 9	0	No
fin.	2	3582	-567.21	-2286			520	0	SLV 9	0	No
ini.	2	-201	-780.81	3241			574	223	SLV 2	0.07	No
fin.	2	3549	430.26	619			520	0	SLV 2	0	No
ini.	2	-2968	-795.88	2853			1311	455	SLV 4	0.16	No
fin.	2	1204	512.97	980			520	0	SLV 4	0	No
ini.	2	3517	386.16	-685			520	0	SLV 13	0	No
fin.	2	-609	-955.86	-3203			682	270	SLV 13	0.08	No
ini.	2	4328	-354.78	2321			520	0	SLV 5	0	No
fin.	2	4830	-151.38	-1139			520	0	SLV 5	0	No
ini.	2	-201	-780.81	3241			574	223	SLV 1	0.07	No
fin.	2	3549	430.26	619			520	0	SLV 1	0	No
ini.	2	4328	-354.78	2321			520	0	SLV 6	0	No
fin.	2	4830	-151.38	-1139			520	0	SLV 6	0	No
ini.	2	-2968	-795.88	2853			1311	455	SLV 3	0.16	No
fin.	2	1204	512.97	980			520	0	SLV 3	0	No

Tabella dei coefficienti di sicurezza minimi

Stato limite	Coeff.s.	Comb.	Verifica
PF_SLV	0.322	SLV 13	No
V_SLV	0	SLV 1	No
PF_SLU	0.485	SLU 76	No
V_SLU	0	SLU 2	No

Trave di accoppiamento 29

Verifiche condotte secondo D.M. 17-01-18 (N.T.C.)

Dati geometrici

X ini.	Y ini.	Z ini.inf.	Z ini.sup.	H ini.	X fin.	Y fin.	Z fin.inf.	Z fin.sup	H fin.	Luce	Spessore	R. Trazione
-2.933	5.816	-2.03	-0.03	2	-1.933	5.816	-2.03	-0.03	2	1	0.45	30000

Caratteristiche del materiale

(Circolare 7 21-01-19 C8.5.I) Muratura in mattoni pieni e malta di calce LC2_Corti

fb_	fhk	fvk0	fhmedio	τ0	fv0	μ	ϕ	fvk,lim	E	G	FC
120000			172500	9000	20000	0.577	0.767	6500	320000000	128000000	1.2

Verifiche a pressoflessione delle travi in muratura in combinazioni non sismiche

Sezione	γM	N	M	Mu	Comb.	c.s.	Verifica
ini.	3	-4188	-500	9132.35	SLU 77	18.26	Si
fin.	3	-3033	-1913.99	9132.35	SLU 77	4.77	Si
ini.	3	-4095	-537.53	9132.35	SLU 74	16.99	Si
fin.	3	-2998	-1848.44	9132.35	SLU 74	4.94	Si
ini.	3	-4097	-595.12	9132.35	SLU 82	15.35	Si
fin.	3	-3007	-1844.97	9132.35	SLU 82	4.95	Si
ini.	3	-4212	-552.94	9132.35	SLU 83	16.52	Si
fin.	3	-3070	-1915.91	9132.35	SLU 83	4.77	Si
ini.	3	-4190	-557.59	9132.35	SLU 84	16.38	Si
fin.	3	-3042	-1910.53	9132.35	SLU 84	4.78	Si
ini.	3	-4165	-494.98	9132.35	SLU 79	18.45	Si
fin.	3	-3014	-1907.44	9132.35	SLU 79	4.79	Si
ini.	3	-4142	-499.63	9132.35	SLU 80	18.28	Si
fin.	3	-2986	-1902.06	9132.35	SLU 80	4.8	Si
ini.	3	-4120	-590.46	9132.35	SLU 81	15.47	Si
fin.	3	-3036	-1850.36	9132.35	SLU 81	4.94	Si
ini.	3	-4072	-542.18	9132.35	SLU 75	16.84	Si
fin.	3	-2970	-1843.05	9132.35	SLU 75	4.96	Si
ini.	3	-4165	-504.65	9132.35	SLU 78	18.1	Si
fin.	3	-3004	-1908.61	9132.35	SLU 78	4.78	Si

Verifiche a taglio delle travi in muratura secondo §C8.7.1.3.1 in combinazioni non sismiche

Sezione	γM	N	M	V	Vt	Vp	Vt fess. diag.	Vt,lim	Comb.	c.s.	Verifica
ini.	3	-4072	-542.18	-7100			5095	2003	SLU 75	0.28	No
fin.	3	-2970	-1843.05	2618			4654	1840	SLU 75	0.7	No
ini.	3	-4097	-595.12	-7136			5105	2006	SLU 82	0.28	No
fin.	3	-3007	-1844.97	2783			4669	1846	SLU 82	0.66	No
ini.	3	-4165	-504.65	-7346			5132	2016	SLU 78	0.27	No
fin.	3	-3004	-1908.61	2553			4668	1845	SLU 78	0.72	No
ini.	3	-4188	-500	-7367			5141	2019	SLU 77	0.27	No
fin.	3	-3033	-1913.99	2567			4679	1850	SLU 77	0.72	No
ini.	3	-4190	-557.59	-7382			5142	2019	SLU 84	0.27	No
fin.	3	-3042	-1910.53	2717			4683	1851	SLU 84	0.68	No

Sezione	γM	N	M	V	Vt	Vp	Vt fess. diag.	Vt,lim	Comb.	c.s.	Verifica
ini.	3	-4212	-552.94	-7403			5151	2022	SLU 83	0.27	No
fin.	3	-3070	-1915.91	2731			4694	1855	SLU 83	0.68	No
ini.	3	-4120	-590.46	-7156			5114	2009	SLU 81	0.28	No
fin.	3	-3036	-1850.36	2797			4680	1850	SLU 81	0.66	No
ini.	3	-4142	-499.63	-7311			5123	2013	SLU 80	0.28	No
fin.	3	-2986	-1902.06	2527			4660	1842	SLU 80	0.73	No
ini.	3	-4095	-537.53	-7120			5104	2006	SLU 74	0.28	No
fin.	3	-2998	-1848.44	2632			4665	1844	SLU 74	0.7	No
ini.	3	-4165	-494.98	-7331			5132	2016	SLU 79	0.27	No
fin.	3	-3014	-1907.44	2541			4672	1847	SLU 79	0.73	No

Verifiche a pressoflessione delle travi in muratura in combinazioni sismiche

Sezione	γM	N	M	Mu	Comb.	c.s.	Verifica
ini.	2	-5600	4425.44	13698.53	SLV 13	3.1	Si
fin.	2	885	-5891.2	13698.53	SLV 13	2.33	Si
ini.	2	-58	-5246.39	13698.53	SLV 4	2.61	Si
fin.	2	-5119	3402.96	13698.53	SLV 4	4.03	Si
ini.	2	115	613.97	13698.53	SLV 10	22.31	Si
fin.	2	2931	-2740.14	13698.53	SLV 10	5	Si
ini.	2	-58	-5246.39	13698.53	SLV 3	2.61	Si
fin.	2	-5119	3402.96	13698.53	SLV 3	4.03	Si
ini.	2	2431	-5527.49	13698.53	SLV 2	2.48	Si
fin.	2	-2384	3335.78	13698.53	SLV 2	4.11	Si
ini.	2	115	613.97	13698.53	SLV 9	22.31	Si
fin.	2	2931	-2740.14	13698.53	SLV 9	5	Si
ini.	2	2431	-5527.49	13698.53	SLV 1	2.48	Si
fin.	2	-2384	3335.78	13698.53	SLV 1	4.11	Si
ini.	2	-8089	4706.54	13698.53	SLV 15	2.91	Si
fin.	2	-1850	-5824.02	13698.53	SLV 15	2.35	Si
ini.	2	-8089	4706.54	13698.53	SLV 16	2.91	Si
fin.	2	-1850	-5824.02	13698.53	SLV 16	2.35	Si
ini.	2	-5600	4425.44	13698.53	SLV 14	3.1	Si
fin.	2	885	-5891.2	13698.53	SLV 14	2.33	Si

Verifiche a taglio delle travi in muratura secondo §C8.7.1.3.1 in combinazioni sismiche

Sezione	γM	N	M	V	Vt	Vp	Vt fess. diag.	Vt,lim	Comb.	c.s.	Verifica
ini.	2	-8089	4706.54	-22005			8434	3272	SLV 15	0.15	No
fin.	2	-1850	-5824.02	-11493			5939	2324	SLV 15	0.2	No
ini.	2	-5600	4425.44	-20184			7439	2931	SLV 13	0.15	No
fin.	2	885	-5891.2	-12858			5199	1754	SLV 13	0.14	No
ini.	2	115	613.97	-6609			5199	1931	SLV 9	0.29	No
fin.	2	2931	-2740.14	-4622			5199	1155	SLV 9	0.25	No
ini.	2	-8089	4706.54	-22005			8434	3272	SLV 16	0.15	No
fin.	2	-1850	-5824.02	-11493			5939	2324	SLV 16	0.2	No
ini.	2	-58	-5246.39	10715			5222	1969	SLV 4	0.18	No
fin.	2	-5119	3402.96	16589			7246	2860	SLV 4	0.17	No
ini.	2	-5600	4425.44	-20184			7439	2931	SLV 14	0.15	No
fin.	2	885	-5891.2	-12858			5199	1754	SLV 14	0.14	No
ini.	2	2431	-5527.49	12536			5199	1327	SLV 1	0.11	No
fin.	2	-2384	3335.78	15224			6153	2420	SLV 1	0.16	No
ini.	2	2431	-5527.49	12536			5199	1327	SLV 2	0.11	No
fin.	2	-2384	3335.78	15224			6153	2420	SLV 2	0.16	No
ini.	2	115	613.97	-6609			5199	1931	SLV 10	0.29	No
fin.	2	2931	-2740.14	-4622			5199	1155	SLV 10	0.25	No
ini.	2	-58	-5246.39	10715			5222	1969	SLV 3	0.18	No
fin.	2	-5119	3402.96	16589			7246	2860	SLV 3	0.17	No

Tabella dei coefficienti di sicurezza minimi

Stato limite	Coeff.s.	Comb.	Verifica
PF_SLV	2.325	SLV 13	Si
V_SLV	0.106	SLV 1	No
PF_SLU	4.767	SLU 83	Si
V_SLU	0.273	SLU 83	No

Trave di accoppiamento 30

Verifiche condotte secondo D.M. 17-01-18 (N.T.C.)

Dati geometrici

X ini.	Y ini.	Z ini.inf.	Z ini.sup.	H ini.	X fin.	Y fin.	Z fin.inf.	Z fin.sup	H fin.	Luce	Spessore	R. Trazione
-2.933	5.816	0.37	0.67	0.3	-1.933	5.816	0.37	0.67	0.3	1	0.45	30000

Caratteristiche del materiale

(Circolare 7 21-01-19 C8.5.I) Muratura in mattoni pieni e malta di calce LC2_Corti

fb_	fhk	fvk0	fhmedio	τ0	fv0	μ	ϕ	fvk,lim	E	G	FC
120000			172500	9000	20000	0.577	0.767	6500	320000000	128000000	1.2

Verifiche a pressoflessione delle travi in muratura in combinazioni non sismiche

Sezione	γM	N	M	Mu	Comb.	c.s.	Verifica
ini.	3	1149	-186.3	205.48	SLU 82	1.1	Si
fin.	3	70	-370.64	205.48	SLU 82	0.55	No
ini.	3	1204	-173.32	205.48	SLU 77	1.19	Si
fin.	3	11	-378.33	205.48	SLU 77	0.54	No
ini.	3	1199	-183.43	205.48	SLU 83	1.12	Si
fin.	3	36	-382.67	205.48	SLU 83	0.54	No
ini.	3	1200	-173.7	205.48	SLU 78	1.18	Si
fin.	3	15	-377.44	205.48	SLU 78	0.54	No

Sezione	γM	N	M	Mu	Comb.	c.s.	Verifica
ini.	3	1196	-172.45	205.48	SLU 80	1.19	Si
fin.	3	12	-375.86	205.48	SLU 80	0.55	No
ini.	3	1158	-175.82	205.48	SLU 74	1.17	Si
fin.	3	41	-367.17	205.48	SLU 74	0.56	No
ini.	3	1154	-176.2	205.48	SLU 75	1.17	Si
fin.	3	45	-366.29	205.48	SLU 75	0.56	No
ini.	3	1152	-185.93	205.48	SLU 81	1.11	Si
fin.	3	66	-371.52	205.48	SLU 81	0.55	No
ini.	3	1199	-172.07	205.48	SLU 79	1.19	Si
fin.	3	9	-376.74	205.48	SLU 79	0.55	No
ini.	3	1195	-183.81	205.48	SLU 84	1.12	Si
fin.	3	39	-381.79	205.48	SLU 84	0.54	No

Verifiche a taglio delle travi in muratura secondo §C8.7.1.3.1 in combinazioni non sismiche

Sezione	γM	N	M	V	Vt	Vp	Vt fess. diag.	Vt,lim	Comb.	c.s.	Verifica
ini.	3	1035	-159.16	1242			347	0	SLU 55	0	No
fin.	3	64	-325.57	-1889			347	121	SLU 55	0.06	No
ini.	3	1092	-157.27	1248			347	0	SLU 56	0	No
fin.	3	30	-339.78	-1960			347	126	SLU 56	0.06	No
ini.	3	1040	-169.88	1306			347	0	SLU 60	0	No
fin.	3	85	-332.98	-1938			347	117	SLU 60	0.06	No
ini.	3	1084	-156.41	1241			347	0	SLU 59	0	No
fin.	3	32	-337.31	-1946			347	126	SLU 59	0.06	No
ini.	3	1087	-156.03	1239			347	0	SLU 58	0	No
fin.	3	28	-338.2	-1950			347	126	SLU 58	0.06	No
ini.	3	1088	-157.65	1249			347	0	SLU 57	0	No
fin.	3	34	-338.9	-1956			347	125	SLU 57	0.06	No
ini.	3	1037	-170.26	1307			347	0	SLU 61	0	No
fin.	3	89	-332.09	-1934			347	117	SLU 61	0.06	No
ini.	3	1045	-159.77	1248			347	0	SLU 53	0	No
fin.	3	61	-328.63	-1905			347	121	SLU 53	0.06	No
ini.	3	1042	-160.15	1250			347	0	SLU 54	0	No
fin.	3	64	-327.74	-1901			347	121	SLU 54	0.06	No
ini.	3	713	-112.21	871			347	0	SLU 1	0	No
fin.	3	69	-222.5	-1300			347	120	SLU 1	0.09	No

Verifiche a pressoflessione delle travi in muratura in combinazioni sismiche

Sezione	γM	N	M	Mu	Comb.	c.s.	Verifica
ini.	2	-247	-731.64	308.22	SLV 8	0.42	No
fin.	2	781	-522.32	308.22	SLV 8	0.59	No
ini.	2	-247	-731.64	308.22	SLV 7	0.42	No
fin.	2	781	-522.32	308.22	SLV 7	0.59	No
ini.	2	3953	189.06	308.22	SLV 15	1.63	Si
fin.	2	-3125	-1037.09	308.22	SLV 15	0.3	No
ini.	2	3991	472.78	308.22	SLV 14	0.65	No
fin.	2	-2995	-753.56	308.22	SLV 14	0.41	No
ini.	2	1671	-459.47	308.22	SLV 11	0.67	No
fin.	2	-1091	-912.57	308.22	SLV 11	0.34	No
ini.	2	-2440	-718.17	308.22	SLV 4	0.43	No
fin.	2	3118	263.75	308.22	SLV 4	1.17	Si
ini.	2	3991	472.78	308.22	SLV 13	0.65	No
fin.	2	-2995	-753.56	308.22	SLV 13	0.41	No
ini.	2	3953	189.06	308.22	SLV 16	1.63	Si
fin.	2	-3125	-1037.09	308.22	SLV 16	0.3	No
ini.	2	1671	-459.47	308.22	SLV 12	0.67	No
fin.	2	-1091	-912.57	308.22	SLV 12	0.34	No
ini.	2	-2440	-718.17	308.22	SLV 3	0.43	No
fin.	2	3118	263.75	308.22	SLV 3	1.17	Si

Verifiche a taglio delle travi in muratura secondo §C8.7.1.3.1 in combinazioni sismiche

Sezione	γM	N	M	V	Vt	Vp	Vt fess. diag.	Vt,lim	Comb.	c.s.	Verifica
ini.	2	-120	214.08	1010			552	212	SLV 6	0.21	No
fin.	2	1215	422.76	-5			520	0	SLV 6	0	No
ini.	2	-120	214.08	1010			552	212	SLV 5	0.21	No
fin.	2	1215	422.76	-5			520	0	SLV 5	0	No
ini.	2	-2402	-434.45	2755			1160	418	SLV 2	0.15	No
fin.	2	3248	547.28	1465			520	0	SLV 2	0	No
ini.	2	-2440	-718.17	3073			1171	420	SLV 4	0.14	No
fin.	2	3118	263.75	1100			520	0	SLV 4	0	No
ini.	2	-2402	-434.45	2755			1160	418	SLV 1	0.15	No
fin.	2	3248	547.28	1465			520	0	SLV 1	0	No
ini.	2	1798	486.25	-168			520	0	SLV 10	0	No
fin.	2	-658	32.51	-1629			695	275	SLV 10	0.17	No
ini.	2	-2440	-718.17	3073			1171	420	SLV 3	0.14	No
fin.	2	3118	263.75	1100			520	0	SLV 3	0	No
ini.	2	-247	-731.64	2069			586	229	SLV 7	0.11	No
fin.	2	781	-522.32	-1221			520	0	SLV 7	0	No
ini.	2	-247	-731.64	2069			586	229	SLV 8	0.11	No
fin.	2	781	-522.32	-1221			520	0	SLV 8	0	No
ini.	2	1798	486.25	-168			520	0	SLV 9	0	No
fin.	2	-658	32.51	-1629			695	275	SLV 9	0.17	No

Tabella dei coefficienti di sicurezza minimi

Stato limite	Coeff.s.	Comb.	Verifica
PF_SLV	0.297	SLV 15	No
V_SLV	0	SLV 1	No
PF_SLU	0.537	SLU 83	No
V_SLU	0	SLU 1	No

Trave di accoppiamento 31

Verifiche condotte secondo D.M. 17-01-18 (N.T.C.)

Dati geometrici

X ini.	Y ini.	Z ini.inf.	Z ini.sup.	H ini.	X fin.	Y fin.	Z fin.inf.	Z fin.sup	H fin.	Luce	Spessore	R. Trazione
-21.849	5.798	0.67	1.57	0.9	-22.849	5.798	0.67	1.57	0.9	1	0.28	30000

Caratteristiche del materiale

(Circolare 7 21-01-19 C8.5.I) Muratura in mattoni pieni e malta di calce LC2_Corti

fb_	fhk	fvk0	fhmedio	τ0	fv0	μ	ϕ	fvk,lim	E	G	FC
120000			172500	9000	20000	0.577	0.767	6500	320000000	128000000	1.2

Verifiche a pressoflessione delle travi in muratura in combinazioni non sismiche

Sezione	γM	N	M	Mu	Comb.	c.s.	Verifica
ini.	3	2212	550.66	1150.68	SLU 84	2.09	Si
fin.	3	2841	-349.38	1150.68	SLU 84	3.29	Si
ini.	3	2243	546.62	1150.68	SLU 83	2.11	Si
fin.	3	2878	-347.81	1150.68	SLU 83	3.31	Si
ini.	3	2105	561.25	1150.68	SLU 78	2.05	Si
fin.	3	2833	-366.37	1150.68	SLU 78	3.14	Si
ini.	3	2158	525.62	1150.68	SLU 74	2.19	Si
fin.	3	2772	-327.96	1150.68	SLU 74	3.51	Si
ini.	3	2126	529.66	1150.68	SLU 75	2.17	Si
fin.	3	2735	-329.53	1150.68	SLU 75	3.49	Si
ini.	3	2084	531.97	1150.68	SLU 76	2.16	Si
fin.	3	2697	-332.77	1150.68	SLU 76	3.46	Si
ini.	3	2233	519.07	1150.68	SLU 82	2.22	Si
fin.	3	2743	-312.55	1150.68	SLU 82	3.68	Si
ini.	3	2084	560.86	1150.68	SLU 80	2.05	Si
fin.	3	2819	-368.56	1150.68	SLU 80	3.12	Si
ini.	3	2137	557.21	1150.68	SLU 77	2.07	Si
fin.	3	2869	-364.8	1150.68	SLU 77	3.15	Si
ini.	3	2116	556.82	1150.68	SLU 79	2.07	Si
fin.	3	2856	-366.98	1150.68	SLU 79	3.14	Si

Verifiche a taglio delle travi in muratura secondo §C8.7.1.3.1 in combinazioni non sismiche

Sezione	γM	N	M	V	Vt	Vp	Vt fess. diag.	Vt,lim	Comb.	c.s.	Verifica
ini.	3	1951	470.38	-4219			873	0	SLU 53	0	No
fin.	3	2487	-279.9	-503			873	0	SLU 53	0	No
ini.	3	1919	474.42	-4209			873	0	SLU 54	0	No
fin.	3	2450	-281.47	-512			873	0	SLU 54	0	No
ini.	3	1877	505.62	-4369			873	0	SLU 59	0	No
fin.	3	2534	-320.5	-622			873	0	SLU 59	0	No
ini.	3	1898	506.01	-4396			873	0	SLU 57	0	No
fin.	3	2548	-318.31	-607			873	0	SLU 57	0	No
ini.	3	1908	501.58	-4378			873	0	SLU 58	0	No
fin.	3	2571	-318.93	-612			873	0	SLU 58	0	No
ini.	3	2057	459.79	-4161			873	0	SLU 60	0	No
fin.	3	2495	-262.91	-462			873	0	SLU 60	0	No
ini.	3	2026	463.83	-4152			873	0	SLU 61	0	No
fin.	3	2459	-264.49	-471			873	0	SLU 61	0	No
ini.	3	1877	476.73	-4176			873	0	SLU 55	0	No
fin.	3	2412	-284.71	-533			873	0	SLU 55	0	No
ini.	3	1929	501.96	-4405			873	0	SLU 56	0	No
fin.	3	2584	-316.74	-598			873	0	SLU 56	0	No
ini.	3	1365	313.43	-2909			873	0	SLU 1	0	No
fin.	3	1689	-169.63	-280			873	0	SLU 1	0	No

Verifiche a pressoflessione delle travi in muratura in combinazioni sismiche

Sezione	γM	N	M	Mu	Comb.	c.s.	Verifica
ini.	2	-5217	1817.93	1726.01	SLV 1	0.95	No
fin.	2	1458	-1666.34	1726.01	SLV 1	1.04	Si
ini.	2	1242	1397.38	1726.01	SLV 3	1.24	Si
fin.	2	7849	-2362.97	1726.01	SLV 3	0.73	No
ini.	2	11217	21.82	1726.01	SLV 8	79.12	Si
fin.	2	13343	-1902.05	1726.01	SLV 8	0.91	No
ini.	2	1748	-710.45	1726.01	SLV 14	2.43	Si
fin.	2	-4150	1972.69	1726.01	SLV 14	0.87	No
ini.	2	-8226	665.12	1726.01	SLV 9	2.6	Si
fin.	2	-9643	1511.78	1726.01	SLV 9	1.14	Si
ini.	2	11217	21.82	1726.01	SLV 7	79.12	Si
fin.	2	13343	-1902.05	1726.01	SLV 7	0.91	No
ini.	2	1242	1397.38	1726.01	SLV 4	1.24	Si
fin.	2	7849	-2362.97	1726.01	SLV 4	0.73	No
ini.	2	-8226	665.12	1726.01	SLV 10	2.6	Si
fin.	2	-9643	1511.78	1726.01	SLV 10	1.14	Si
ini.	2	-5217	1817.93	1726.01	SLV 2	0.95	No
fin.	2	1458	-1666.34	1726.01	SLV 2	1.04	Si
ini.	2	1748	-710.45	1726.01	SLV 13	2.43	Si
fin.	2	-4150	1972.69	1726.01	SLV 13	0.87	No

Verifiche a taglio delle travi in muratura secondo §C8.7.1.3.1 in combinazioni sismiche

Sezione	γM	N	M	V	Vt	Vp	Vt fess. diag.	Vt,lim	Comb.	c.s.	Verifica
ini.	2	13306	-736.69	-3472			1310	0	SLV 11	0	No
fin.	2	11660	-810.35	3034			1310	0	SLV 11	0	No
ini.	2	11217	21.82	-7089			1310	0	SLV 8	0	No
fin.	2	13343	-1902.05	-310			1310	0	SLV 8	0	No
ini.	2	1242	1397.38	-9806			1310	58	SLV 3	0.01	No
fin.	2	7849	-2362.97	-5399			1310	0	SLV 3	0	No

Sezione	γM	N	M	V	Vt	Vp	Vt fess. diag.	Vt,lim	Comb.	c.s.	Verifica
ini.	2	-5217	1817.93	-8519			3188	1118	SLV 1	0.13	No
fin.	2	1458	-1666.34	-6417			1310	0	SLV 1	0	No
ini.	2	1242	1397.38	-9806			1310	58	SLV 4	0.01	No
fin.	2	7849	-2362.97	-5399			1310	0	SLV 4	0	No
ini.	2	-5217	1817.93	-8519			3188	1118	SLV 2	0.13	No
fin.	2	1458	-1666.34	-6417			1310	0	SLV 2	0	No
ini.	2	1748	-710.45	3538			1310	0	SLV 14	0	No
fin.	2	-4150	1972.69	4728			2804	1022	SLV 14	0.22	No
ini.	2	11217	21.82	-7089			1310	0	SLV 7	0	No
fin.	2	13343	-1902.05	-310			1310	0	SLV 7	0	No
ini.	2	13306	-736.69	-3472			1310	0	SLV 12	0	No
fin.	2	11660	-810.35	3034			1310	0	SLV 12	0	No
ini.	2	1748	-710.45	3538			1310	0	SLV 13	0	No
fin.	2	-4150	1972.69	4728			2804	1022	SLV 13	0.22	No

Tabella dei coefficienti di sicurezza minimi

Stato limite	Coeff.s.	Comb.	Verifica
PF_SLV	0.73	SLV 3	No
V_SLV	0	SLV 1	No
PF_SLU	2.05	SLU 78	Si
V_SLU	0	SLU 1	No

Trave di accoppiamento 32

Verifiche condotte secondo D.M. 17-01-18 (N.T.C.)

Dati geometrici

X ini.	Y ini.	Z ini.inf.	Z ini.sup.	H ini.	X fin.	Y fin.	Z fin.inf.	Z fin.sup	H fin.	Luce	Spessore	R. Trazione
-21.849	5.798	3.47	4.35	0.88	-22.849	5.798	3.47	4.35	0.88	1	0.28	30000

Caratteristiche del materiale

(Circolare 7 21-01-19 C8.5.I) Muratura in mattoni pieni e malta di calce LC2_Corti

fb_	fhk	fvk0	fhmedio	τ0	fv0	μ	ϕ	fvk,lim	E	G	FC
120000			172500	9000	20000	0.577	0.767	6500	320000000	128000000	1.2

Verifiche a pressoflessione delle travi in muratura in combinazioni non sismiche

Sezione	γM	N	M	Mu	Comb.	c.s.	Verifica
ini.	3	176	189.5	1100.1	SLU 80	5.81	Si
fin.	3	-1035	-601.88	1100.1	SLU 80	1.83	Si
ini.	3	166	185.72	1100.1	SLU 78	5.92	Si
fin.	3	-1037	-601.28	1100.1	SLU 78	1.83	Si
ini.	3	168	186.17	1100.1	SLU 79	5.91	Si
fin.	3	-1034	-599.5	1100.1	SLU 79	1.84	Si
ini.	3	118	153.69	1100.1	SLU 76	7.16	Si
fin.	3	-966	-557.55	1100.1	SLU 76	1.97	Si
ini.	3	159	175.8	1100.1	SLU 72	6.26	Si
fin.	3	-951	-547.74	1100.1	SLU 72	2.01	Si
ini.	3	104	147.69	1100.1	SLU 75	7.45	Si
fin.	3	-968	-555.36	1100.1	SLU 75	1.98	Si
ini.	3	120	157.34	1100.1	SLU 84	6.99	Si
fin.	3	-1002	-579.16	1100.1	SLU 84	1.9	Si
ini.	3	158	182.39	1100.1	SLU 77	6.03	Si
fin.	3	-1036	-598.9	1100.1	SLU 77	1.84	Si
ini.	3	112	154.01	1100.1	SLU 83	7.14	Si
fin.	3	-1001	-576.78	1100.1	SLU 83	1.91	Si
ini.	3	96	144.35	1100.1	SLU 74	7.62	Si
fin.	3	-968	-552.98	1100.1	SLU 74	1.99	Si

Verifiche a taglio delle travi in muratura secondo §C8.7.1.3.1 in combinazioni non sismiche

Sezione	γM	N	M	V	Vt	Vp	Vt fess. diag.	Vt,lim	Comb.	c.s.	Verifica
ini.	3	58	119.31	1319			835	303	SLU 82	0.23	No
fin.	3	-933	-533.25	-3468			1163	459	SLU 82	0.13	No
ini.	3	176	189.5	1052			835	279	SLU 80	0.26	No
fin.	3	-1035	-601.88	-3676			1199	472	SLU 80	0.13	No
ini.	3	166	185.72	1077			835	281	SLU 78	0.26	No
fin.	3	-1037	-601.28	-3684			1200	473	SLU 78	0.13	No
ini.	3	104	147.69	1180			835	294	SLU 75	0.25	No
fin.	3	-968	-555.36	-3504			1176	464	SLU 75	0.13	No
ini.	3	118	153.69	1146			835	291	SLU 76	0.25	No
fin.	3	-966	-557.55	-3499			1175	464	SLU 76	0.13	No
ini.	3	168	186.17	1067			835	280	SLU 79	0.26	No
fin.	3	-1034	-599.5	-3672			1199	472	SLU 79	0.13	No
ini.	3	112	154.01	1230			835	292	SLU 83	0.24	No
fin.	3	-1001	-576.78	-3643			1188	468	SLU 83	0.13	No
ini.	3	120	157.34	1216			835	290	SLU 84	0.24	No
fin.	3	-1002	-579.16	-3647			1188	468	SLU 84	0.13	No
ini.	3	158	182.39	1091			835	282	SLU 77	0.26	No
fin.	3	-1036	-598.9	-3680			1200	473	SLU 77	0.13	No
ini.	3	96	144.35	1194			835	295	SLU 74	0.25	No
fin.	3	-968	-552.98	-3500			1176	464	SLU 74	0.13	No

Verifiche a pressoflessione delle travi in muratura in combinazioni sismiche

Sezione	γM	N	M	Mu	Comb.	c.s.	Verifica
ini.	2	2276	1781.96	1650.16	SLV 3	0.93	No
fin.	2	-3303	-2221.33	1650.16	SLV 3	0.74	No
ini.	2	-2242	-1636.72	1650.16	SLV 13	1.01	Si
fin.	2	2048	1521.03	1650.16	SLV 13	1.08	Si

Sezione	γM	N	M	Mu	Comb.	c.s.	Verifica
ini.	2	-225	1281.01	1650.16	SLV 8	1.29	Si
fin.	2	-3369	-1910.09	1650.16	SLV 8	0.86	No
ini.	2	-2242	-1636.72	1650.16	SLV 14	1.01	Si
fin.	2	2048	1521.03	1650.16	SLV 14	1.08	Si
ini.	2	259	-1135.77	1650.16	SLV 10	1.45	Si
fin.	2	2114	1209.79	1650.16	SLV 10	1.36	Si
ini.	2	2882	1323.33	1650.16	SLV 2	1.25	Si
fin.	2	-2024	-1562.92	1650.16	SLV 2	1.06	Si
ini.	2	2276	1781.96	1650.16	SLV 4	0.93	No
fin.	2	-3303	-2221.33	1650.16	SLV 4	0.74	No
ini.	2	2882	1323.33	1650.16	SLV 1	1.25	Si
fin.	2	-2024	-1562.92	1650.16	SLV 1	1.06	Si
ini.	2	-225	1281.01	1650.16	SLV 7	1.29	Si
fin.	2	-3369	-1910.09	1650.16	SLV 7	0.86	No
ini.	2	259	-1135.77	1650.16	SLV 9	1.45	Si
fin.	2	2114	1209.79	1650.16	SLV 9	1.36	Si

Verifiche a taglio delle travi in muratura secondo §C8.7.1.3.1 in combinazioni sismiche

Sezione	γM	N	M	V	Vt	Vp	Vt fess. diag.	Vt,lim	Comb.	c.s.	Verifica
ini.	2	2882	1323.33	-4168			1253	0	SLV 2	0	No
fin.	2	-2024	-1562.92	-6834			1965	766	SLV 2	0.11	No
ini.	2	2882	1323.33	-4168			1253	0	SLV 1	0	No
fin.	2	-2024	-1562.92	-6834			1965	766	SLV 1	0.11	No
ini.	2	1796	-247.76	-1643			1253	0	SLV 5	0	No
fin.	2	892	284.6	-1659			1253	247	SLV 5	0.15	No
ini.	2	259	-1135.77	1191			1253	419	SLV 10	0.35	No
fin.	2	2114	1209.79	1460			1253	0	SLV 10	0	No
ini.	2	2276	1781.96	-3497			1253	0	SLV 3	0	No
fin.	2	-3303	-2221.33	-8151			2415	904	SLV 3	0.11	No
ini.	2	-2242	-1636.72	5281			2042	792	SLV 14	0.15	No
fin.	2	2048	1521.03	3560			1253	0	SLV 14	0	No
ini.	2	259	-1135.77	1191			1253	419	SLV 9	0.35	No
fin.	2	2114	1209.79	1460			1253	0	SLV 9	0	No
ini.	2	1796	-247.76	-1643			1253	0	SLV 6	0	No
fin.	2	892	284.6	-1659			1253	247	SLV 6	0.15	No
ini.	2	2276	1781.96	-3497			1253	0	SLV 4	0	No
fin.	2	-3303	-2221.33	-8151			2415	904	SLV 4	0.11	No
ini.	2	-2242	-1636.72	5281			2042	792	SLV 13	0.15	No
fin.	2	2048	1521.03	3560			1253	0	SLV 13	0	No

Tabella dei coefficienti di sicurezza minimi

Stato limite	Coeff.s.	Comb.	Verifica
PF_SLV	0.743	SLV 3	No
V_SLV	0	SLV 1	No
PF_SLU	1.828	SLU 80	Si
V_SLU	0.128	SLU 78	No

Trave di accoppiamento 33

Verifiche condotte secondo D.M. 17-01-18 (N.T.C.)

Dati geometrici

X ini.	Y ini.	Z ini.inf.	Z ini.sup.	H ini.	X fin.	Y fin.	Z fin.inf.	Z fin.sup	H fin.	Luce	Spessore	R. Trazione
-21.608	-3.254	0.67	1.57	0.9	-22.608	-3.254	0.67	1.57	0.9	1	0.28	30000

Caratteristiche del materiale

(Circolare 7 21-01-19 C8.5.I) Muratura in mattoni pieni e malta di calce LC2_Corti

fb_	fhk	fvk0	fhmedio	τ0	fv0	μ	ϕ	fvk,lim	E	G	FC
120000			172500	9000	20000	0.577	0.767	6500	320000000	128000000	1.2

Verifiche a pressoflessione delle travi in muratura in combinazioni non sismiche

Sezione	γM	N	M	Mu	Comb.	c.s.	Verifica
ini.	3	7018	1017.38	1150.68	SLU 79	1.13	Si
fin.	3	7420	76.42	1150.68	SLU 79	15.06	Si
ini.	3	7070	1019.24	1150.68	SLU 77	1.13	Si
fin.	3	7466	81.14	1150.68	SLU 77	14.18	Si
ini.	3	6396	929.96	1150.68	SLU 58	1.24	Si
fin.	3	6762	83.9	1150.68	SLU 58	13.71	Si
ini.	3	6606	936.01	1150.68	SLU 62	1.23	Si
fin.	3	6948	94.44	1150.68	SLU 62	12.18	Si
ini.	3	6357	926.08	1150.68	SLU 71	1.24	Si
fin.	3	6724	85.99	1150.68	SLU 71	13.38	Si
ini.	3	6997	986.16	1150.68	SLU 74	1.17	Si
fin.	3	7354	95.77	1150.68	SLU 74	12.01	Si
ini.	3	7229	1023.42	1150.68	SLU 83	1.12	Si
fin.	3	7606	86.96	1150.68	SLU 83	13.23	Si
ini.	3	6409	927.94	1150.68	SLU 69	1.24	Si
fin.	3	6770	90.7	1150.68	SLU 69	12.69	Si
ini.	3	6448	931.83	1150.68	SLU 56	1.23	Si
fin.	3	6808	88.62	1150.68	SLU 56	12.98	Si
ini.	3	7155	990.34	1150.68	SLU 81	1.16	Si
fin.	3	7493	101.6	1150.68	SLU 81	11.33	Si

Verifiche a taglio delle travi in muratura secondo §C8.7.1.3.1 in combinazioni non sismiche

Sezione	γM	N	M	V	Vt	Vp	Vt fess. diag.	Vt,lim	Comb.	c.s.	Verifica
ini.	3	3879	772.83	-1736			873	0	SLU 61	0	No
fin.	3	4576	42.09	1099			873	0	SLU 61	0	No

Sezione	γM	N	M	V	Vt	Vp	Vt fess. diag.	Vt,lim	Comb.	c.s.	Verifica
ini.	3	3742	799.87	-1819			873	0	SLU 59	0	No
fin.	3	4502	16.91	1011			873	0	SLU 59	0	No
ini.	3	6533	902.93	-1337			873	0	SLU 60	0	No
fin.	3	6835	109.08	491			873	0	SLU 60	0	No
ini.	3	6375	898.75	-1344			873	0	SLU 53	0	No
fin.	3	6696	103.26	464			873	0	SLU 53	0	No
ini.	3	3794	801.73	-1821			873	0	SLU 57	0	No
fin.	3	4549	21.63	1031			873	0	SLU 57	0	No
ini.	3	1900	680.06	-2008			873	0	SLU 55	0	No
fin.	3	2884	-13.11	1457			873	0	SLU 55	0	No
ini.	3	6448	931.83	-1421			873	0	SLU 56	0	No
fin.	3	6808	88.62	423			873	0	SLU 56	0	No
ini.	3	6396	929.96	-1420			873	0	SLU 58	0	No
fin.	3	6762	83.9	403			873	0	SLU 58	0	No
ini.	3	3721	768.65	-1743			873	0	SLU 54	0	No
fin.	3	4437	36.27	1072			873	0	SLU 54	0	No
ini.	3	4463	617.29	-887			873	0	SLU 1	0	No
fin.	3	4667	92.45	367			873	0	SLU 1	0	No

Verifiche a pressoflessione delle travi in muratura in combinazioni sismiche

Sezione	γM	N	M	Mu	Comb.	c.s.	Verifica
ini.	2	-10479	1698.78	1726.01	SLV 5	1.02	Si
fin.	2	-7505	90.74	1726.01	SLV 5	19.02	Si
ini.	2	1694	-1960.99	1726.01	SLV 14	0.88	No
fin.	2	-4099	1455.64	1726.01	SLV 14	1.19	Si
ini.	2	-10479	1698.78	1726.01	SLV 6	1.02	Si
fin.	2	-7505	90.74	1726.01	SLV 6	19.02	Si
ini.	2	-979	3430.69	1726.01	SLV 1	0.5	No
fin.	2	5782	-1052.83	1726.01	SLV 1	1.64	Si
ini.	2	10638	-2093.99	1726.01	SLV 16	0.82	No
fin.	2	4326	1227.98	1726.01	SLV 16	1.41	Si
ini.	2	-979	3430.69	1726.01	SLV 2	0.5	No
fin.	2	5782	-1052.83	1726.01	SLV 2	1.64	Si
ini.	2	7966	3297.69	1726.01	SLV 4	0.52	No
fin.	2	14207	-1280.49	1726.01	SLV 4	1.35	Si
ini.	2	10638	-2093.99	1726.01	SLV 15	0.82	No
fin.	2	4326	1227.98	1726.01	SLV 15	1.41	Si
ini.	2	1694	-1960.99	1726.01	SLV 13	0.88	No
fin.	2	-4099	1455.64	1726.01	SLV 13	1.19	Si
ini.	2	7966	3297.69	1726.01	SLV 3	0.52	No
fin.	2	14207	-1280.49	1726.01	SLV 3	1.35	Si

Verifiche a taglio delle travi in muratura secondo §C8.7.1.3.1 in combinazioni sismiche

Sezione	γM	N	M	V	Vt	Vp	Vt fess. diag.	Vt,lim	Comb.	c.s.	Verifica
ini.	2	20138	-362.07	3120			1310	0	SLV 12	0	No
fin.	2	17613	84.42	92			1310	0	SLV 12	0	No
ini.	2	1694	-1960.99	4812			1310	0	SLV 13	0	No
fin.	2	-4099	1455.64	6561			2786	1017	SLV 13	0.15	No
ini.	2	7966	3297.69	-6776			1310	0	SLV 3	0	No
fin.	2	14207	-1280.49	-5807			1310	0	SLV 3	0	No
ini.	2	20138	-362.07	3120			1310	0	SLV 11	0	No
fin.	2	17613	84.42	92			1310	0	SLV 11	0	No
ini.	2	-979	3430.69	-8077			1663	657	SLV 1	0.08	No
fin.	2	5782	-1052.83	-4629			1310	0	SLV 1	0	No
ini.	2	-979	3430.69	-8077			1663	657	SLV 2	0.08	No
fin.	2	5782	-1052.83	-4629			1310	0	SLV 2	0	No
ini.	2	19336	1255.43	-747			1310	0	SLV 7	0	No
fin.	2	20578	-668.12	-3265			1310	0	SLV 7	0	No
ini.	2	19336	1255.43	-747			1310	0	SLV 8	0	No
fin.	2	20578	-668.12	-3265			1310	0	SLV 8	0	No
ini.	2	1694	-1960.99	4812			1310	0	SLV 14	0	No
fin.	2	-4099	1455.64	6561			2786	1017	SLV 14	0.15	No
ini.	2	7966	3297.69	-6776			1310	0	SLV 4	0	No
fin.	2	14207	-1280.49	-5807			1310	0	SLV 4	0	No

Tabella dei coefficienti di sicurezza minimi

Stato limite	Coeff.s.	Comb.	Verifica
PF_SLV	0.503	SLV 1	No
V_SLV	0	SLV 1	No
PF_SLU	1.124	SLU 83	Si
V_SLU	0	SLU 1	No

Trave di accoppiamento 34

Verifiche condotte secondo D.M. 17-01-18 (N.T.C.)

Dati geometrici

X ini.	Y ini.	Z ini.inf.	Z ini.sup.	H ini.	X fin.	Y fin.	Z fin.inf.	Z fin.sup	H fin.	Luce	Spessore	R. Trazione
-21.608	-3.254	3.47	4.35	0.88	-22.608	-3.254	3.47	4.35	0.88	1	0.28	30000

Caratteristiche del materiale

(Circolare 7 21-01-19 C8.5.I) Muratura in mattoni pieni e malta di calce LC2_Corti

fb_	fhk	fvk0	fhmedio	τ0	fv0	μ	ϕ	fvk,lim	E	G	FC
120000			172500	9000	20000	0.577	0.767	6500	320000000	128000000	1.2

Verifiche a pressoflessione delle travi in muratura in combinazioni non sismiche

Sezione	γM	N	M	Mu	Comb.	c.s.	Verifica
ini.	3	-577	229.58	1100.1	SLU 75	4.79	Si
fin.	3	-2081	-686.05	1100.1	SLU 75	1.6	Si
ini.	3	-555	250.45	1100.1	SLU 78	4.39	Si
fin.	3	-2134	-711.45	1100.1	SLU 78	1.55	Si
ini.	3	-600	223.12	1100.1	SLU 82	4.93	Si
fin.	3	-2098	-687.42	1100.1	SLU 82	1.6	Si
ini.	3	-643	274.18	1100.1	SLU 81	4.01	Si
fin.	3	-2206	-672.79	1100.1	SLU 81	1.64	Si
ini.	3	-591	303.21	1100.1	SLU 79	3.63	Si
fin.	3	-2233	-695.05	1100.1	SLU 79	1.58	Si
ini.	3	-598	301.51	1100.1	SLU 77	3.65	Si
fin.	3	-2242	-696.82	1100.1	SLU 77	1.58	Si
ini.	3	-541	197.23	1100.1	SLU 76	5.58	Si
fin.	3	-2000	-694.03	1100.1	SLU 76	1.59	Si
ini.	3	-622	295.06	1100.1	SLU 83	3.73	Si
fin.	3	-2259	-698.19	1100.1	SLU 83	1.58	Si
ini.	3	-548	252.15	1100.1	SLU 80	4.36	Si
fin.	3	-2125	-709.68	1100.1	SLU 80	1.55	Si
ini.	3	-579	243.99	1100.1	SLU 84	4.51	Si
fin.	3	-2151	-712.83	1100.1	SLU 84	1.54	Si

Verifiche a taglio delle travi in muratura secondo §C8.7.1.3.1 in combinazioni non sismiche

Sezione	γM	N	M	V	Vt	Vp	Vt fess. diag.	Vt,lim	Comb.	c.s.	Verifica
ini.	3	-563	176.36	813			1033	408	SLU 73	0.5	No
fin.	3	-1947	-668.63	-3832			1520	577	SLU 73	0.15	No
ini.	3	-541	197.23	759			1025	405	SLU 76	0.53	No
fin.	3	-2000	-694.03	-3939			1539	582	SLU 76	0.15	No
ini.	3	-555	250.45	582			1030	407	SLU 78	0.7	No
fin.	3	-2134	-711.45	-4012			1586	596	SLU 78	0.15	No
ini.	3	-622	295.06	441			1054	417	SLU 83	0.94	No
fin.	3	-2259	-698.19	-3987			1630	609	SLU 83	0.15	No
ini.	3	-598	301.51	378			1046	413	SLU 77	1.09	Si
fin.	3	-2242	-696.82	-3937			1624	607	SLU 77	0.15	No
ini.	3	-577	229.58	636			1038	410	SLU 75	0.64	No
fin.	3	-2081	-686.05	-3905			1568	591	SLU 75	0.15	No
ini.	3	-548	252.15	569			1028	406	SLU 80	0.71	No
fin.	3	-2125	-709.68	-3996			1583	595	SLU 80	0.15	No
ini.	3	-600	223.12	699			1046	413	SLU 82	0.59	No
fin.	3	-2098	-687.42	-3955			1573	592	SLU 82	0.15	No
ini.	3	-579	243.99	645			1039	410	SLU 84	0.64	No
fin.	3	-2151	-712.83	-4062			1592	598	SLU 84	0.15	No
ini.	3	-591	303.21	365			1043	412	SLU 79	1.13	Si
fin.	3	-2233	-695.05	-3921			1621	606	SLU 79	0.15	No

Verifiche a pressoflessione delle travi in muratura in combinazioni sismiche

Sezione	γM	N	M	Mu	Comb.	c.s.	Verifica
ini.	2	-2717	-1791.49	1650.16	SLV 13	0.92	No
fin.	2	1727	1203.01	1650.16	SLV 13	1.37	Si
ini.	2	-1881	-1453.79	1650.16	SLV 15	1.14	Si
fin.	2	2830	1667.53	1650.16	SLV 15	0.99	No
ini.	2	1767	2151.5	1650.16	SLV 4	0.77	No
fin.	2	-4745	-2101.17	1650.16	SLV 4	0.79	No
ini.	2	-2717	-1791.49	1650.16	SLV 14	0.92	No
fin.	2	1727	1203.01	1650.16	SLV 14	1.37	Si
ini.	2	-1321	157.96	1650.16	SLV 5	10.45	Si
fin.	2	-4484	-1788.6	1650.16	SLV 5	0.92	No
ini.	2	-1881	-1453.79	1650.16	SLV 16	1.14	Si
fin.	2	2830	1667.53	1650.16	SLV 16	0.99	No
ini.	2	-1321	157.96	1650.16	SLV 6	10.45	Si
fin.	2	-4484	-1788.6	1650.16	SLV 6	0.92	No
ini.	2	1767	2151.5	1650.16	SLV 3	0.77	No
fin.	2	-4745	-2101.17	1650.16	SLV 3	0.79	No
ini.	2	931	1813.8	1650.16	SLV 1	0.91	No
fin.	2	-5848	-2565.7	1650.16	SLV 1	0.64	No
ini.	2	931	1813.8	1650.16	SLV 2	0.91	No
fin.	2	-5848	-2565.7	1650.16	SLV 2	0.64	No

Verifiche a taglio delle travi in muratura secondo §C8.7.1.3.1 in combinazioni sismiche

Sezione	γM	N	M	V	Vt	Vp	Vt fess. diag.	Vt,lim	Comb.	c.s.	Verifica
ini.	2	-1881	-1453.79	5635			1915	749	SLV 16	0.13	No
fin.	2	2830	1667.53	4567			1253	0	SLV 16	0	No
ini.	2	-2717	-1791.49	6252			2209	844	SLV 14	0.13	No
fin.	2	1727	1203.01	3619			1253	0	SLV 14	0	No
ini.	2	-1881	-1453.79	5635			1915	749	SLV 15	0.13	No
fin.	2	2830	1667.53	4567			1253	0	SLV 15	0	No
ini.	2	371	202.04	986			1253	394	SLV 11	0.4	No
fin.	2	1466	890.43	1007			1253	0	SLV 11	0	No
ini.	2	1466	1283.63	-2381			1253	0	SLV 7	0	No
fin.	2	-806	-240.18	-2993			1536	606	SLV 7	0.2	No
ini.	2	-2717	-1791.49	6252			2209	844	SLV 13	0.13	No
fin.	2	1727	1203.01	3619			1253	0	SLV 13	0	No
ini.	2	1767	2151.5	-5588			1253	0	SLV 3	0	No
fin.	2	-4745	-2101.17	-8765			2923	1038	SLV 3	0.12	No
ini.	2	371	202.04	986			1253	394	SLV 12	0.4	No
fin.	2	1466	890.43	1007			1253	0	SLV 12	0	No
ini.	2	1767	2151.5	-5588			1253	0	SLV 4	0	No
fin.	2	-4745	-2101.17	-8765			2923	1038	SLV 4	0.12	No
ini.	2	1466	1283.63	-2381			1253	0	SLV 8	0	No
fin.	2	-806	-240.18	-2993			1536	606	SLV 8	0.2	No

Tabella dei coefficienti di sicurezza minimi

Stato limite	Coeff.s.	Comb.	Verifica
PF_SLV	0.643	SLV 1	No
V_SLV	0	SLV 3	No
PF_SLU	1.543	SLU 84	Si
V_SLU	0.147	SLU 84	No

Trave di accoppiamento 35

Verifiche condotte secondo D.M. 17-01-18 (N.T.C.)

Dati geometrici

X ini.	Y ini.	Z ini.inf.	Z ini.sup.	H ini.	X fin.	Y fin.	Z fin.inf.	Z fin.sup	H fin.	Luce	Spessore	R. Trazione
-18.803	-3.254	0.67	2.669	1.999	-19.303	-3.254	0.67	2.669	1.999	0.5	0.28	30000

Caratteristiche del materiale

(Circolare 7 21-01-19 C8.5.I) Muratura in mattoni pieni e malta di calce LC2_Corti

fb_	fhk	fvk0	fhmedio	τ0	fv0	μ	ϕ	fvk,lim	E	G	FC
120000			172500	9000	20000	0.577	0.767	6500	320000000	128000000	1.2

Verifiche a pressoflessione delle travi in muratura in combinazioni non sismiche

Sezione	γM	N	M	Mu	Comb.	c.s.	Verifica
ini.	3	-1787	-746.59	5677.2	SLU 75	7.6	Si
fin.	3	-619	3348.76	5677.19	SLU 75	1.7	Si
ini.	3	-1786	-760.89	5677.2	SLU 82	7.46	Si
fin.	3	-607	3449.26	5677.19	SLU 82	1.65	Si
ini.	3	-2790	-1835.91	5677.2	SLU 81	3.09	Si
fin.	3	-559	3665.27	5677.19	SLU 81	1.55	Si
ini.	3	-1832	-783.88	5677.2	SLU 84	7.24	Si
fin.	3	-600	3475.33	5677.19	SLU 84	1.63	Si
ini.	3	-2670	-1728.2	5677.2	SLU 62	3.29	Si
fin.	3	-557	3365.38	5677.19	SLU 62	1.69	Si
ini.	3	-2838	-1844.59	5677.2	SLU 77	3.08	Si
fin.	3	-564	3590.85	5677.19	SLU 77	1.58	Si
ini.	3	-2792	-1821.6	5677.2	SLU 74	3.12	Si
fin.	3	-571	3564.77	5677.19	SLU 74	1.59	Si
ini.	3	-2837	-1858.89	5677.2	SLU 83	3.05	Si
fin.	3	-552	3691.34	5677.19	SLU 83	1.54	Si
ini.	3	-2817	-1828.18	5677.2	SLU 79	3.11	Si
fin.	3	-553	3563.64	5677.19	SLU 79	1.59	Si
ini.	3	-1834	-769.57	5677.2	SLU 78	7.38	Si
fin.	3	-612	3374.83	5677.19	SLU 78	1.68	Si

Verifiche a taglio delle travi in muratura secondo §C8.7.1.3.1 in combinazioni non sismiche

Sezione	γM	N	M	V	Vt	Vp	Vt fess. diag.	Vt,lim	Comb.	c.s.	Verifica
ini.	3	-2792	-1821.6	4675			3272	1282	SLU 74	0.27	No
fin.	3	-571	3564.77	9796			2384	927	SLU 74	0.09	No
ini.	3	-1787	-746.59	3974			2871	1135	SLU 75	0.29	No
fin.	3	-619	3348.76	9319			2403	936	SLU 75	0.1	No
ini.	3	-1832	-783.88	4113			2889	1142	SLU 84	0.28	No
fin.	3	-600	3475.33	9639			2396	933	SLU 84	0.1	No
ini.	3	-1786	-760.89	4144			2870	1135	SLU 82	0.27	No
fin.	3	-607	3449.26	9600			2398	934	SLU 82	0.1	No
ini.	3	-1834	-769.57	3943			2889	1142	SLU 78	0.29	No
fin.	3	-612	3374.83	9358			2401	935	SLU 78	0.1	No
ini.	3	-2838	-1844.59	4644			3291	1288	SLU 77	0.28	No
fin.	3	-564	3590.85	9835			2381	926	SLU 77	0.09	No
ini.	3	-2817	-1828.18	4591			3283	1285	SLU 79	0.28	No
fin.	3	-553	3563.64	9741			2377	924	SLU 79	0.09	No
ini.	3	-2790	-1835.91	4844			3272	1282	SLU 81	0.26	No
fin.	3	-559	3665.27	10077			2379	925	SLU 81	0.09	No
ini.	3	-2837	-1858.89	4814			3290	1288	SLU 83	0.27	No
fin.	3	-552	3691.34	10116			2377	923	SLU 83	0.09	No
ini.	3	-2670	-1728.2	4405			3224	1265	SLU 62	0.29	No
fin.	3	-557	3365.38	9226			2378	924	SLU 62	0.1	No

Verifiche a pressoflessione delle travi in muratura in combinazioni sismiche

Sezione	γM	N	M	Mu	Comb.	c.s.	Verifica
ini.	2	-6699	-7273.42	8515.8	SLV 7	1.17	Si
fin.	2	502	47.57	8515.79	SLV 7	179.01	Si
ini.	2	-5932	-7153.9	8515.8	SLV 12	1.19	Si
fin.	2	-422	1408.08	8515.79	SLV 12	6.05	Si
ini.	2	2730	4710.15	8515.8	SLV 9	1.81	Si
fin.	2	-1392	4864.49	8515.79	SLV 9	1.75	Si
ini.	2	593	697.17	8515.8	SLV 13	12.21	Si
fin.	2	-2131	5242.01	8515.79	SLV 13	1.62	Si
ini.	2	-6699	-7273.42	8515.8	SLV 8	1.17	Si
fin.	2	502	47.57	8515.79	SLV 8	179.01	Si
ini.	2	1963	4590.63	8515.8	SLV 5	1.86	Si
fin.	2	-468	3503.98	8515.79	SLV 5	2.43	Si
ini.	2	1963	4590.63	8515.8	SLV 6	1.86	Si
fin.	2	-468	3503.98	8515.79	SLV 6	2.43	Si
ini.	2	-5932	-7153.9	8515.8	SLV 11	1.19	Si
fin.	2	-422	1408.08	8515.79	SLV 11	6.05	Si
ini.	2	593	697.17	8515.8	SLV 14	12.21	Si
fin.	2	-2131	5242.01	8515.79	SLV 14	1.62	Si
ini.	2	2730	4710.15	8515.8	SLV 10	1.81	Si

Sezione	γM	N	M	Mu	Comb.	c.s.	Verifica
fin.	2	-1392	4864.49	8515.79	SLV 10	1.75	Si

Verifiche a taglio delle travi in muratura secondo §C8.7.1.3.1 in combinazioni sismiche

Sezione	γM	N	M	V	Vt	Vp	Vt fess. diag.	Vt,lim	Comb.	c.s.	Verifica
ini.	2	-2006	-2862.04	14557			4036	1594	SLV 15	0.11	No
fin.	2	-1840	4205.09	16734			3969	1567	SLV 15	0.09	No
ini.	2	-5932	-7153.9	8758			5606	2149	SLV 11	0.25	No
fin.	2	-422	1408.08	8109			3402	1305	SLV 11	0.16	No
ini.	2	-1963	298.77	-8014			4019	1587	SLV 1	0.2	No
fin.	2	950	706.97	-3191			3234	989	SLV 1	0.31	No
ini.	2	-1963	298.77	-8014			4019	1587	SLV 2	0.2	No
fin.	2	950	706.97	-3191			3234	989	SLV 2	0.31	No
ini.	2	-5932	-7153.9	8758			5606	2149	SLV 12	0.25	No
fin.	2	-422	1408.08	8109			3402	1305	SLV 12	0.16	No
ini.	2	2730	4710.15	4141			3234	191	SLV 10	0.05	No
fin.	2	-1392	4864.49	11740			3790	1489	SLV 10	0.13	No
ini.	2	593	697.17	13172			3234	1080	SLV 13	0.08	No
fin.	2	-2131	5242.01	17824			4086	1615	SLV 13	0.09	No
ini.	2	2730	4710.15	4141			3234	191	SLV 9	0.05	No
fin.	2	-1392	4864.49	11740			3790	1489	SLV 9	0.13	No
ini.	2	-2006	-2862.04	14557			4036	1594	SLV 16	0.11	No
fin.	2	-1840	4205.09	16734			3969	1567	SLV 16	0.09	No
ini.	2	593	697.17	13172			3234	1080	SLV 14	0.08	No
fin.	2	-2131	5242.01	17824			4086	1615	SLV 14	0.09	No

Tabella dei coefficienti di sicurezza minimi

Stato limite	Coeff.s.	Comb.	Verifica
PF_SLV	1.171	SLV 7	Si
V_SLV	0.046	SLV 9	No
PF_SLU	1.538	SLU 83	Si
V_SLU	0.091	SLU 83	No

Trave di accoppiamento 36

Verifiche condotte secondo D.M. 17-01-18 (N.T.C.)

Dati geometrici

X ini.	Y ini.	Z ini.inf.	Z ini.sup.	H ini.	X fin.	Y fin.	Z fin.inf.	Z fin.sup	H fin.	Luce	Spessore	R. Trazione
-18.803	-3.254	3.47	4.35	0.88	-19.303	-3.254	3.47	4.35	0.88	0.5	0.28	30000

Caratteristiche del materiale

(Circolare 7 21-01-19 C8.5.I) Muratura in mattoni pieni e malta di calce LC2_Corti

fb_	fhk	fvk0	fhmedio	τ0	fv0	μ	ϕ	fvk,lim	E	G	FC
120000			172500	9000	20000	0.577	0.767	6500	320000000	128000000	1.2

Verifiche a pressoflessione delle travi in muratura in combinazioni non sismiche

Sezione	γM	N	M	Mu	Comb.	c.s.	Verifica
ini.	3	172	-463.44	1100.1	SLU 77	2.37	Si
fin.	3	1716	230.08	1100.1	SLU 77	4.78	Si
ini.	3	284	-421.21	1100.1	SLU 84	2.61	Si
fin.	3	1493	174.73	1100.1	SLU 84	6.3	Si
ini.	3	146	-477.79	1100.1	SLU 83	2.3	Si
fin.	3	1747	237.06	1100.1	SLU 83	4.64	Si
ini.	3	178	-457.55	1100.1	SLU 74	2.4	Si
fin.	3	1719	234.81	1100.1	SLU 74	4.69	Si
ini.	3	135	-419.39	1100.1	SLU 58	2.62	Si
fin.	3	1521	203.69	1100.1	SLU 58	5.4	Si
ini.	3	126	-435.76	1100.1	SLU 62	2.52	Si
fin.	3	1583	215.53	1100.1	SLU 62	5.1	Si
ini.	3	132	-429.86	1100.1	SLU 60	2.56	Si
fin.	3	1586	220.26	1100.1	SLU 60	4.99	Si
ini.	3	151	-421.41	1100.1	SLU 56	2.61	Si
fin.	3	1552	208.55	1100.1	SLU 56	5.27	Si
ini.	3	155	-461.42	1100.1	SLU 79	2.38	Si
fin.	3	1685	225.22	1100.1	SLU 79	4.88	Si
ini.	3	152	-471.89	1100.1	SLU 81	2.33	Si
fin.	3	1750	241.79	1100.1	SLU 81	4.55	Si

Verifiche a taglio delle travi in muratura secondo §C8.7.1.3.1 in combinazioni non sismiche

Sezione	γM	N	M	V	Vt	Vp	Vt fess. diag.	Vt,lim	Comb.	c.s.	Verifica
ini.	3	157	-415.51	6382			949	321	SLU 53	0.05	No
fin.	3	1555	213.28	-616			949	0	SLU 53	0	No
ini.	3	289	-364.82	5881			949	287	SLU 57	0.05	No
fin.	3	1298	146.22	-1326			949	0	SLU 57	0	No
ini.	3	273	-362.8	5820			949	292	SLU 59	0.05	No
fin.	3	1266	141.36	-1325			949	0	SLU 59	0	No
ini.	3	151	-421.41	6447			949	323	SLU 56	0.05	No
fin.	3	1552	208.55	-661			949	0	SLU 56	0	No
ini.	3	371	-319.18	5377			949	265	SLU 55	0.05	No
fin.	3	1099	104.54	-1722			949	0	SLU 55	0	No
ini.	3	135	-419.39	6385			949	326	SLU 58	0.05	No
fin.	3	1521	203.69	-661			949	0	SLU 58	0	No
ini.	3	132	-429.86	6579			949	327	SLU 60	0.05	No
fin.	3	1586	220.26	-604			949	0	SLU 60	0	No
ini.	3	270	-373.27	6013			949	293	SLU 61	0.05	No
fin.	3	1331	157.93	-1269			949	0	SLU 61	0	No
ini.	3	145	-284.65	4408			949	324	SLU 1	0.07	No

Sezione	γM	N	M	V	Vt	Vp	Vt fess. diag.	Vt,lim	Comb.	c.s.	Verifica
fin.	3	1110	156.88	-397			949	0	SLU 1	0	No
ini.	3	295	-358.92	5816			949	286	SLU 54	0.05	No
fin.	3	1300	150.95	-1280			949	0	SLU 54	0	No

Verifiche a pressoflessione delle travi in muratura in combinazioni sismiche

Sezione	γM	N	M	Mu	Comb.	c.s.	Verifica
ini.	2	2793	-14.1	1650.16	SLV 10	117.03	Si
fin.	2	2732	754.89	1650.16	SLV 10	2.19	Si
ini.	2	4357	51.1	1650.16	SLV 14	32.29	Si
fin.	2	6257	1321.61	1650.16	SLV 14	1.25	Si
ini.	2	2793	-14.1	1650.16	SLV 9	117.03	Si
fin.	2	2732	754.89	1650.16	SLV 9	2.19	Si
ini.	2	-3160	-549.75	1650.16	SLV 1	3	Si
fin.	2	-3852	-827.19	1650.16	SLV 1	1.99	Si
ini.	2	3442	-73.26	1650.16	SLV 15	22.52	Si
fin.	2	6245	1162.73	1650.16	SLV 15	1.42	Si
ini.	2	-4075	-674.11	1650.16	SLV 3	2.45	Si
fin.	2	-3863	-986.07	1650.16	SLV 3	1.67	Si
ini.	2	-4075	-674.11	1650.16	SLV 4	2.45	Si
fin.	2	-3863	-986.07	1650.16	SLV 4	1.67	Si
ini.	2	3442	-73.26	1650.16	SLV 16	22.52	Si
fin.	2	6245	1162.73	1650.16	SLV 16	1.42	Si
ini.	2	4357	51.1	1650.16	SLV 13	32.29	Si
fin.	2	6257	1321.61	1650.16	SLV 13	1.25	Si
ini.	2	-3160	-549.75	1650.16	SLV 2	3	Si
fin.	2	-3852	-827.19	1650.16	SLV 2	1.99	Si

Verifiche a taglio delle travi in muratura secondo §C8.7.1.3.1 in combinazioni sismiche

Sezione	γM	N	M	V	Vt	Vp	Vt fess. diag.	Vt,lim	Comb.	c.s.	Verifica
ini.	2	3442	-73.26	7756			1423	0	SLV 16	0	No
fin.	2	6245	1162.73	4289			1423	0	SLV 16	0	No
ini.	2	538	-194.36	4042			1423	402	SLV 5	0.1	No
fin.	2	-301	110.25	-4955			1544	597	SLV 5	0.12	No
ini.	2	4357	51.1	7826			1423	0	SLV 14	0	No
fin.	2	6257	1321.61	2252			1423	0	SLV 14	0	No
ini.	2	538	-194.36	4042			1423	402	SLV 6	0.1	No
fin.	2	-301	110.25	-4955			1544	597	SLV 6	0.12	No
ini.	2	4357	51.1	7826			1423	0	SLV 13	0	No
fin.	2	6257	1321.61	2252			1423	0	SLV 13	0	No
ini.	2	-256	-428.65	5592			1526	589	SLV 12	0.11	No
fin.	2	2694	225.29	4066			1423	0	SLV 12	0	No
ini.	2	3442	-73.26	7756			1423	0	SLV 15	0	No
fin.	2	6245	1162.73	4289			1423	0	SLV 15	0	No
ini.	2	2793	-14.1	5827			1423	0	SLV 9	0	No
fin.	2	2732	754.89	-2726			1423	0	SLV 9	0	No
ini.	2	-256	-428.65	5592			1526	589	SLV 11	0.11	No
fin.	2	2694	225.29	4066			1423	0	SLV 11	0	No
ini.	2	2793	-14.1	5827			1423	0	SLV 10	0	No
fin.	2	2732	754.89	-2726			1423	0	SLV 10	0	No

Tabella dei coefficienti di sicurezza minimi

Stato limite	Coeff.s.	Comb.	Verifica
PF_SLV	1.249	SLV 13	Si
V_SLV	0	SLV 9	No
PF_SLU	2.302	SLU 83	Si
V_SLU	0	SLU 1	No

Trave di accoppiamento 37

Verifiche condotte secondo D.M. 17-01-18 (N.T.C.)

Dati geometrici

X ini.	Y ini.	Z ini.inf.	Z ini.sup.	H ini.	X fin.	Y fin.	Z fin.inf.	Z fin.sup	H fin.	Luce	Spessore	R. Trazione
-17.275	-3.254	0.67	1.57	0.9	-18.275	-3.254	0.67	1.57	0.9	1	0.28	30000

Caratteristiche del materiale

(Circolare 7 21-01-19 C8.5.I) Muratura in mattoni pieni e malta di calce LC2_Corti

fb_	fhk	fvk0	fhmedio	τ0	fv0	μ	ϕ	fvk,lim	E	G	FC
120000			172500	9000	20000	0.577	0.767	6500	320000000	128000000	1.2

Verifiche a pressoflessione delle travi in muratura in combinazioni non sismiche

Sezione	γM	N	M	Mu	Comb.	c.s.	Verifica
ini.	3	-2906	-972.71	1150.68	SLU 62	1.18	Si
fin.	3	-4059	-1408.08	1150.68	SLU 62	0.82	No
ini.	3	-2872	-932.73	1150.68	SLU 58	1.23	Si
fin.	3	-3986	-1371.47	1150.68	SLU 58	0.84	No
ini.	3	-3048	-1075.35	1150.68	SLU 81	1.07	Si
fin.	3	-4304	-1508.57	1150.68	SLU 81	0.76	No
ini.	3	-3105	-1070.26	1150.68	SLU 83	1.08	Si
fin.	3	-4359	-1537.17	1150.68	SLU 83	0.75	No
ini.	3	-2873	-965.35	1150.68	SLU 69	1.19	Si
fin.	3	-4019	-1352.62	1150.68	SLU 69	0.85	No
ini.	3	-3071	-1030.28	1150.68	SLU 79	1.12	Si
fin.	3	-4286	-1500.56	1150.68	SLU 79	0.77	No
ini.	3	-2887	-949.22	1150.68	SLU 56	1.21	Si
fin.	3	-4019	-1375.69	1150.68	SLU 56	0.84	No
ini.	3	-3086	-1046.77	1150.68	SLU 77	1.1	Si

Sezione	γM	N	M	Mu	Comb.	c.s.	Verifica
fin.	3	-4319	-1504.78	1150.68	SLU 77	0.76	No
ini.	3	-3028	-1051.86	1150.68	SLU 74	1.09	Si
fin.	3	-4263	-1476.18	1150.68	SLU 74	0.78	No
ini.	3	-2849	-977.8	1150.68	SLU 60	1.18	Si
fin.	3	-4003	-1379.49	1150.68	SLU 60	0.83	No

Verifiche a taglio delle travi in muratura secondo §C8.7.1.3.1 in combinazioni non sismiche

Sezione	γM	N	M	V	Vt	Vp	Vt fess. diag.	Vt,lim	Comb.	c.s.	Verifica
ini.	3	-1285	-872.65	-402			1336	523	SLU 31	1.3	Si
fin.	3	-1384	-701.32	1029			1372	535	SLU 31	0.52	No
ini.	3	-1820	-1045.73	-493			1529	585	SLU 73	1.19	Si
fin.	3	-2130	-935.45	1224			1640	618	SLU 73	0.5	No
ini.	3	-1665	-959.21	-427			1473	568	SLU 68	1.33	Si
fin.	3	-1885	-811.89	1144			1552	592	SLU 68	0.52	No
ini.	3	-1607	-964.3	-377			1452	561	SLU 65	1.49	Si
fin.	3	-1829	-783.29	1160			1532	586	SLU 65	0.51	No
ini.	3	-1073	-791.23	-286			1260	496	SLU 23	1.74	Si
fin.	3	-1084	-549.16	964			1264	497	SLU 23	0.52	No
ini.	3	-1130	-786.14	-335			1280	503	SLU 26	1.5	Si
fin.	3	-1139	-577.76	948			1284	505	SLU 26	0.53	No
ini.	3	-1877	-1040.64	-543			1549	591	SLU 76	1.09	Si
fin.	3	-2185	-964.05	1208			1660	624	SLU 76	0.52	No
ini.	3	-874	-693.68	-221			1188	469	SLU 2	2.13	Si
fin.	3	-783	-420.07	858			1155	457	SLU 2	0.53	No
ini.	3	-1409	-866.75	-312			1381	538	SLU 44	1.72	Si
fin.	3	-1529	-654.21	1054			1424	552	SLU 44	0.52	No
ini.	3	-1621	-948.18	-428			1457	563	SLU 52	1.31	Si
fin.	3	-1829	-806.37	1119			1532	586	SLU 52	0.52	No

Verifiche a pressoflessione delle travi in muratura in combinazioni sismiche

Sezione	γM	N	M	Mu	Comb.	c.s.	Verifica
ini.	2	-5104	2482.98	1726.01	SLV 7	0.7	No
fin.	2	-7403	-3844.31	1726.01	SLV 7	0.45	No
ini.	2	-5104	2482.98	1726.01	SLV 8	0.7	No
fin.	2	-7403	-3844.31	1726.01	SLV 8	0.45	No
ini.	2	849	-3962.05	1726.01	SLV 10	0.44	No
fin.	2	1403	1827.64	1726.01	SLV 10	0.94	No
ini.	2	-4881	3176.26	1726.01	SLV 4	0.54	No
fin.	2	-4408	-3545.36	1726.01	SLV 4	0.49	No
ini.	2	-4881	3176.26	1726.01	SLV 3	0.54	No
fin.	2	-4408	-3545.36	1726.01	SLV 3	0.49	No
ini.	2	-792	-3305.15	1726.01	SLV 16	0.52	No
fin.	2	-4217	160.65	1726.01	SLV 16	10.74	Si
ini.	2	626	-4655.33	1726.01	SLV 14	0.37	No
fin.	2	-1592	1528.69	1726.01	SLV 14	1.13	Si
ini.	2	626	-4655.33	1726.01	SLV 13	0.37	No
fin.	2	-1592	1528.69	1726.01	SLV 13	1.13	Si
ini.	2	-792	-3305.15	1726.01	SLV 15	0.52	No
fin.	2	-4217	160.65	1726.01	SLV 15	10.74	Si
ini.	2	849	-3962.05	1726.01	SLV 9	0.44	No
fin.	2	1403	1827.64	1726.01	SLV 9	0.94	No

Verifiche a taglio delle travi in muratura secondo §C8.7.1.3.1 in combinazioni sismiche

Sezione	γM	N	M	V	Vt	Vp	Vt fess. diag.	Vt,lim	Comb.	c.s.	Verifica
ini.	2	626	-4655.33	6255			1310	350	SLV 14	0.06	No
fin.	2	-1592	1528.69	7729			1883	742	SLV 14	0.1	No
ini.	2	-792	-3305.15	5339			1595	629	SLV 15	0.12	No
fin.	2	-4217	160.65	6414			2828	1028	SLV 15	0.16	No
ini.	2	-4881	3176.26	-7116			3067	1088	SLV 3	0.15	No
fin.	2	-4408	-3545.36	-6084			2897	1046	SLV 3	0.17	No
ini.	2	-4881	3176.26	-7116			3067	1088	SLV 4	0.15	No
fin.	2	-4408	-3545.36	-6084			2897	1046	SLV 4	0.17	No
ini.	2	849	-3962.05	2963			1310	282	SLV 9	0.1	No
fin.	2	1403	1827.64	4889			1310	0	SLV 9	0	No
ini.	2	849	-3962.05	2963			1310	282	SLV 10	0.1	No
fin.	2	1403	1827.64	4889			1310	0	SLV 10	0	No
ini.	2	-378	-2017.63	-773			1446	562	SLV 6	0.73	No
fin.	2	1345	715.83	1140			1310	0	SLV 6	0	No
ini.	2	626	-4655.33	6255			1310	350	SLV 13	0.06	No
fin.	2	-1592	1528.69	7729			1883	742	SLV 13	0.1	No
ini.	2	-378	-2017.63	-773			1446	562	SLV 5	0.73	No
fin.	2	1345	715.83	1140			1310	0	SLV 5	0	No
ini.	2	-792	-3305.15	5339			1595	629	SLV 16	0.12	No
fin.	2	-4217	160.65	6414			2828	1028	SLV 16	0.16	No

Tabella dei coefficienti di sicurezza minimi

Stato limite	Coeff.s.	Comb.	Verifica
PF_SLV	0.371	SLV 13	No
V_SLV	0	SLV 5	No
PF_SLU	0.749	SLU 83	No
V_SLU	0.505	SLU 73	No

Trave di accoppiamento 38

Verifiche condotte secondo D.M. 17-01-18 (N.T.C.)

Dati geometrici

X ini.	Y ini.	Z ini.inf.	Z ini.sup.	H ini.	X fin.	Y fin.	Z fin.inf.	Z fin.sup	H fin.	Luce	Spessore	R. Trazione
-17.275	-3.254	3.47	4.35	0.88	-18.275	-3.254	3.47	4.35	0.88	1	0.28	30000

Caratteristiche del materiale

(Circolare 7 21-01-19 C8.5.I) Muratura in mattoni pieni e malta di calce LC2_Corti

fb_	fhk	fvk0	fhmedio	τ0	fv0	μ	ϕ	fvk,lim	E	G	FC
120000			172500	9000	20000	0.577	0.767	6500	320000000	128000000	1.2

Verifiche a pressoflessione delle travi in muratura in combinazioni non sismiche

Sezione	γM	N	M	Mu	Comb.	c.s.	Verifica
ini.	3	849	268.83	1100.1	SLU 78	4.09	Si
fin.	3	879	-168.96	1100.1	SLU 78	6.51	Si
ini.	3	932	289.59	1100.1	SLU 81	3.8	Si
fin.	3	910	-192.28	1100.1	SLU 81	5.72	Si
ini.	3	954	295.95	1100.1	SLU 83	3.72	Si
fin.	3	896	-203.55	1100.1	SLU 83	5.4	Si
ini.	3	930	282.44	1100.1	SLU 79	3.9	Si
fin.	3	866	-200.1	1100.1	SLU 79	5.5	Si
ini.	3	846	276.4	1100.1	SLU 82	3.98	Si
fin.	3	897	-164.36	1100.1	SLU 82	6.69	Si
ini.	3	912	275.67	1100.1	SLU 74	3.99	Si
fin.	3	906	-185.62	1100.1	SLU 74	5.93	Si
ini.	3	935	282.03	1100.1	SLU 77	3.9	Si
fin.	3	892	-196.89	1100.1	SLU 77	5.59	Si
ini.	3	868	282.76	1100.1	SLU 84	3.89	Si
fin.	3	884	-175.62	1100.1	SLU 84	6.26	Si
ini.	3	844	269.25	1100.1	SLU 80	4.09	Si
fin.	3	854	-172.17	1100.1	SLU 80	6.39	Si
ini.	3	831	264.19	1100.1	SLU 41	4.16	Si
fin.	3	746	-179.33	1100.1	SLU 41	6.13	Si

Verifiche a taglio delle travi in muratura secondo §C8.7.1.3.1 in combinazioni non sismiche

Sezione	γM	N	M	V	Vt	Vp	Vt fess. diag.	Vt,lim	Comb.	c.s.	Verifica
ini.	3	740	222.47	2011			835	99	SLU 70	0.05	No
fin.	3	841	-134.62	-3480			835	0	SLU 70	0	No
ini.	3	633	201.36	2028			835	151	SLU 65	0.07	No
fin.	3	834	-96.68	-3252			835	0	SLU 65	0	No
ini.	3	776	223.35	1908			835	74	SLU 64	0.04	No
fin.	3	854	-143.22	-3399			835	0	SLU 64	0	No
ini.	3	718	216.1	2009			835	112	SLU 67	0.06	No
fin.	3	854	-123.35	-3399			835	0	SLU 67	0	No
ini.	3	826	235.66	1939			835	0	SLU 69	0	No
fin.	3	853	-162.54	-3569			835	0	SLU 69	0	No
ini.	3	868	282.76	2206			835	0	SLU 84	0	No
fin.	3	884	-175.62	-4087			835	0	SLU 84	0	No
ini.	3	954	295.95	2134			835	0	SLU 83	0	No
fin.	3	896	-203.55	-4176			835	0	SLU 83	0	No
ini.	3	831	264.19	1776			835	0	SLU 41	0	No
fin.	3	746	-179.33	-3588			835	95	SLU 41	0.03	No
ini.	3	804	229.3	1936			835	46	SLU 66	0.02	No
fin.	3	867	-151.27	-3488			835	0	SLU 66	0	No
ini.	3	822	242.02	1928			835	0	SLU 56	0	No
fin.	3	798	-179.04	-3658			835	53	SLU 56	0.01	No

Verifiche a pressoflessione delle travi in muratura in combinazioni sismiche

Sezione	γM	N	M	Mu	Comb.	c.s.	Verifica
ini.	2	2443	1529.19	1650.16	SLV 7	1.08	Si
fin.	2	-2182	-874.75	1650.16	SLV 7	1.89	Si
ini.	2	2443	1529.19	1650.16	SLV 8	1.08	Si
fin.	2	-2182	-874.75	1650.16	SLV 8	1.89	Si
ini.	2	-1018	-876.33	1650.16	SLV 14	1.88	Si
fin.	2	6395	1468.32	1650.16	SLV 14	1.12	Si
ini.	2	-125	-192.49	1650.16	SLV 15	8.57	Si
fin.	2	5666	1281.49	1650.16	SLV 15	1.29	Si
ini.	2	-125	-192.49	1650.16	SLV 16	8.57	Si
fin.	2	5666	1281.49	1650.16	SLV 16	1.29	Si
ini.	2	1332	545.02	1650.16	SLV 1	3.03	Si
fin.	2	-4371	-1513.6	1650.16	SLV 1	1.09	Si
ini.	2	1332	545.02	1650.16	SLV 2	3.03	Si
fin.	2	-4371	-1513.6	1650.16	SLV 2	1.09	Si
ini.	2	2224	1228.85	1650.16	SLV 3	1.34	Si
fin.	2	-5100	-1700.44	1650.16	SLV 3	0.97	No
ini.	2	2224	1228.85	1650.16	SLV 4	1.34	Si
fin.	2	-5100	-1700.44	1650.16	SLV 4	0.97	No
ini.	2	-1018	-876.33	1650.16	SLV 13	1.88	Si
fin.	2	6395	1468.32	1650.16	SLV 13	1.12	Si

Verifiche a taglio delle travi in muratura secondo §C8.7.1.3.1 in combinazioni sismiche

Sezione	γM	N	M	V	Vt	Vp	Vt fess. diag.	Vt,lim	Comb.	c.s.	Verifica
ini.	2	-1237	-1176.66	5580			1688	667	SLV 9	0.12	No
fin.	2	3477	642.63	-754			1253	0	SLV 9	0	No
ini.	2	2443	1529.19	-2629			1253	0	SLV 7	0	No
fin.	2	-2182	-874.75	-4579			2021	785	SLV 7	0.17	No
ini.	2	2224	1228.85	-2890			1253	0	SLV 4	0	No
fin.	2	-5100	-1700.44	-8021			3048	1069	SLV 4	0.13	No
ini.	2	1739	1102.79	-562			1253	0	SLV 11	0	No
fin.	2	1048	19.83	-1427			1253	182	SLV 11	0.13	No
ini.	2	1332	545.02	-1047			1253	0	SLV 2	0	No
fin.	2	-4371	-1513.6	-7819			2791	1005	SLV 2	0.13	No

Sezione	γM	N	M	V	Vt	Vp	Vt fess. diag.	Vt,lim	Comb.	c.s.	Verifica
ini.	2	-1237	-1176.66	5580			1688	667	SLV 10	0.12	No
fin.	2	3477	642.63	-754			1253	0	SLV 10	0	No
ini.	2	1332	545.02	-1047			1253	0	SLV 1	0	No
fin.	2	-4371	-1513.6	-7819			2791	1005	SLV 1	0.13	No
ini.	2	2224	1228.85	-2890			1253	0	SLV 3	0	No
fin.	2	-5100	-1700.44	-8021			3048	1069	SLV 3	0.13	No
ini.	2	1739	1102.79	-562			1253	0	SLV 12	0	No
fin.	2	1048	19.83	-1427			1253	182	SLV 12	0.13	No
ini.	2	2443	1529.19	-2629			1253	0	SLV 8	0	No
fin.	2	-2182	-874.75	-4579			2021	785	SLV 8	0.17	No

Tabella dei coefficienti di sicurezza minimi

Stato limite	Coeff.s.	Comb.	Verifica
PF_SLV	0.97	SLV 3	No
V_SLV	0	SLV 1	No
PF_SLU	3.717	SLU 83	Si
V_SLU	0	SLU 41	No

Trave di accoppiamento 39

Verifiche condotte secondo D.M. 17-01-18 (N.T.C.)

Dati geometrici

X ini.	Y ini.	Z ini.inf.	Z ini.sup.	H ini.	X fin.	Y fin.	Z fin.inf.	Z fin.sup	H fin.	Luce	Spessore	R. Trazione
-19.595	1.283	2.77	4.35	1.58	-19.595	1.983	2.77	4.35	1.58	0.7	0.14	30000

Caratteristiche del materiale

(Circolare 7 21-01-19 C8.5.I) Muratura in mattoni pieni e malta di calce LC2_Corti

fb_	fhk	fvk0	fhmedio	τ0	fv0	μ	ϕ	fvk,lim	E	G	FC
120000			172500	9000	20000	0.577	0.767	6500	320000000	128000000	1.2

Verifiche a pressoflessione delle travi in muratura in combinazioni non sismiche

Sezione	γM	N	M	Mu	Comb.	c.s.	Verifica
ini.	3	-161	195.6	1773.18	SLU 69	9.07	Si
fin.	3	-161	1844.59	1773.18	SLU 69	0.96	No
ini.	3	-172	203.04	1773.18	SLU 70	8.73	Si
fin.	3	-172	1841.79	1773.18	SLU 70	0.96	No
ini.	3	-158	192.08	1773.18	SLU 66	9.23	Si
fin.	3	-158	1807.07	1773.18	SLU 66	0.98	No
ini.	3	-145	207.5	1773.18	SLU 49	8.55	Si
fin.	3	-145	1787.05	1773.18	SLU 49	0.99	No
ini.	3	-170	201.88	1773.18	SLU 72	8.78	Si
fin.	3	-170	1824.51	1773.18	SLU 72	0.97	No
ini.	3	-134	200.05	1773.18	SLU 48	8.86	Si
fin.	3	-134	1789.85	1773.18	SLU 48	0.99	No
ini.	3	-169	199.53	1773.18	SLU 67	8.89	Si
fin.	3	-169	1804.27	1773.18	SLU 67	0.98	No
ini.	3	-192	174.58	1773.18	SLU 77	10.16	Si
fin.	3	-192	1786.95	1773.18	SLU 77	0.99	No
ini.	3	-159	194.43	1773.18	SLU 71	9.12	Si
fin.	3	-159	1827.32	1773.18	SLU 71	0.97	No
ini.	3	-174	203.34	1773.18	SLU 68	8.72	Si
fin.	3	-174	1785.13	1773.18	SLU 68	0.99	No

Verifiche a taglio delle travi in muratura secondo §C8.7.1.3.1 in combinazioni non sismiche

Sezione	γM	N	M	V	Vt	Vp	Vt fess. diag.	Vt,lim	Comb.	c.s.	Verifica
ini.	3	-132	198.89	2415			905	348	SLU 50	0.14	No
fin.	3	-132	1772.58	2047			905	348	SLU 50	0.17	No
ini.	3	-159	194.43	2510			915	353	SLU 71	0.14	No
fin.	3	-159	1827.32	2126			915	353	SLU 71	0.17	No
ini.	3	-192	174.58	2481			929	360	SLU 77	0.15	No
fin.	3	-192	1786.95	2097			929	360	SLU 77	0.17	No
ini.	3	-172	203.04	2518			921	356	SLU 70	0.14	No
fin.	3	-172	1841.79	2134			921	356	SLU 70	0.17	No
ini.	3	-161	195.6	2533			916	354	SLU 69	0.14	No
fin.	3	-161	1844.59	2149			916	354	SLU 69	0.16	No
ini.	3	-169	199.53	2470			919	355	SLU 67	0.14	No
fin.	3	-169	1804.27	2086			919	355	SLU 67	0.17	No
ini.	3	-145	207.5	2424			910	351	SLU 49	0.14	No
fin.	3	-145	1787.05	2055			910	351	SLU 49	0.17	No
ini.	3	-158	192.08	2484			915	353	SLU 66	0.14	No
fin.	3	-158	1807.07	2100			915	353	SLU 66	0.17	No
ini.	3	-170	201.88	2495			920	356	SLU 72	0.14	No
fin.	3	-170	1824.51	2111			920	356	SLU 72	0.17	No
ini.	3	-134	200.05	2438			905	348	SLU 48	0.14	No
fin.	3	-134	1789.85	2070			905	348	SLU 48	0.17	No

Verifiche a pressoflessione delle travi in muratura in combinazioni sismiche

Sezione	γM	N	M	Mu	Comb.	c.s.	Verifica
ini.	2	230	912.25	2659.77	SLV 13	2.92	Si
fin.	2	971	6469.95	2659.77	SLV 13	0.41	No
ini.	2	-1763	-596.08	2659.77	SLV 8	4.46	Si
fin.	2	-1056	-7035.02	2659.77	SLV 8	0.38	No
ini.	2	1521	874.35	2659.77	SLV 9	3.04	Si
fin.	2	814	9673.84	2659.77	SLV 9	0.27	No
ini.	2	1615	510.03	2659.77	SLV 5	5.21	Si
fin.	2	279	7930.41	2659.77	SLV 5	0.34	No

Sezione	γM	N	M	Mu	Comb.	c.s.	Verifica
ini.	2	-1763	-596.08	2659.77	SLV 7	4.46	Si
fin.	2	-1056	-7035.02	2659.77	SLV 7	0.38	No
ini.	2	-1856	-231.75	2659.77	SLV 12	11.48	Si
fin.	2	-521	-5291.59	2659.77	SLV 12	0.5	No
ini.	2	-1856	-231.75	2659.77	SLV 11	11.48	Si
fin.	2	-521	-5291.59	2659.77	SLV 11	0.5	No
ini.	2	1521	874.35	2659.77	SLV 10	3.04	Si
fin.	2	814	9673.84	2659.77	SLV 10	0.27	No
ini.	2	1615	510.03	2659.77	SLV 6	5.21	Si
fin.	2	279	7930.41	2659.77	SLV 6	0.34	No
ini.	2	230	912.25	2659.77	SLV 14	2.92	Si
fin.	2	971	6469.95	2659.77	SLV 14	0.41	No

Verifiche a taglio delle travi in muratura secondo §C8.7.1.3.1 in combinazioni sismiche

Sezione	γM	N	M	V	Vt	Vp	Vt fess. diag.	Vt,lim	Comb.	c.s.	Verifica
ini.	2	1521	874.35	11432			1278	0	SLV 9	0	No
fin.	2	814	9673.84	12220			1278	247	SLV 9	0.02	No
ini.	2	1615	510.03	11445			1278	0	SLV 6	0	No
fin.	2	279	7930.41	10135			1278	416	SLV 6	0.04	No
ini.	2	1615	510.03	11445			1278	0	SLV 5	0	No
fin.	2	279	7930.41	10135			1278	416	SLV 5	0.04	No
ini.	2	230	912.25	4683			1278	428	SLV 14	0.09	No
fin.	2	971	6469.95	7898			1278	168	SLV 14	0.02	No
ini.	2	-1763	-596.08	-7791			1983	774	SLV 7	0.1	No
fin.	2	-1056	-7035.02	-9164			1700	672	SLV 7	0.07	No
ini.	2	1521	874.35	11432			1278	0	SLV 10	0	No
fin.	2	814	9673.84	12220			1278	247	SLV 10	0.02	No
ini.	2	542	-302.15	4728			1278	344	SLV 1	0.07	No
fin.	2	-812	658.5	948			1603	633	SLV 1	0.67	No
ini.	2	-1763	-596.08	-7791			1983	774	SLV 8	0.1	No
fin.	2	-1056	-7035.02	-9164			1700	672	SLV 8	0.07	No
ini.	2	230	912.25	4683			1278	428	SLV 13	0.09	No
fin.	2	971	6469.95	7898			1278	168	SLV 13	0.02	No
ini.	2	542	-302.15	4728			1278	344	SLV 2	0.07	No
fin.	2	-812	658.5	948			1603	633	SLV 2	0.67	No

Tabella dei coefficienti di sicurezza minimi

Stato limite	Coeff.s.	Comb.	Verifica
PF_SLV	0.275	SLV 9	No
V_SLV	0	SLV 5	No
PF_SLU	0.961	SLU 69	No
V_SLU	0.14	SLU 69	No

Trave di accoppiamento 40

Verifiche condotte secondo D.M. 17-01-18 (N.T.C.)

Dati geometrici

X ini.	Y ini.	Z ini.inf.	Z ini.sup.	H ini.	X fin.	Y fin.	Z fin.inf.	Z fin.sup	H fin.	Luce	Spessore	R. Trazione
-16.992	-4.589	3.78	4.35	0.57	-16.992	-3.499	3.78	4.35	0.57	1.09	0.3	30000

Caratteristiche del materiale

(Circolare 7 21-01-19 C8.5.I) Muratura in mattoni pieni e malta di calce LC2_Corti

fb_	fhk	fvk0	fhmedio	τ0	fv0	μ	ϕ	fvk,lim	E	G	FC
120000			172500	9000	20000	0.577	0.767	6500	320000000	128000000	1.2

Verifiche a pressoflessione delle travi in muratura in combinazioni non sismiche

Sezione	γM	N	M	Mu	Comb.	c.s.	Verifica
ini.	3	64	-30.9	494.52	SLU 83	16	Si
fin.	3	-167	66.45	494.52	SLU 83	7.44	Si
ini.	3	62	-30.03	494.52	SLU 74	16.47	Si
fin.	3	-163	65.39	494.52	SLU 74	7.56	Si
ini.	3	59	-29.27	494.52	SLU 79	16.89	Si
fin.	3	-158	63.64	494.52	SLU 79	7.77	Si
ini.	3	63	-28.14	494.52	SLU 35	17.58	Si
fin.	3	-148	58.23	494.52	SLU 35	8.49	Si
ini.	3	48	-25.45	494.52	SLU 69	19.43	Si
fin.	3	-139	57.66	494.52	SLU 69	8.58	Si
ini.	3	62	-30.32	494.52	SLU 81	16.31	Si
fin.	3	-166	65.55	494.52	SLU 81	7.54	Si
ini.	3	46	-24.89	494.52	SLU 56	19.86	Si
fin.	3	-139	57.73	494.52	SLU 56	8.57	Si
ini.	3	64	-30.61	494.52	SLU 77	16.16	Si
fin.	3	-165	66.28	494.52	SLU 77	7.46	Si
ini.	3	46	-25.19	494.52	SLU 62	19.63	Si
fin.	3	-141	57.89	494.52	SLU 62	8.54	Si
ini.	3	64	-28.43	494.52	SLU 41	17.39	Si
fin.	3	-150	58.39	494.52	SLU 41	8.47	Si

Verifiche a taglio delle travi in muratura secondo §C8.7.1.3.1 in combinazioni non sismiche

Sezione	γM	N	M	V	Vt	Vp	Vt fess. diag.	Vt,lim	Comb.	c.s.	Verifica
ini.	3	46	-31.79	-380			439	158	SLU 78	0.42	No
fin.	3	31	13.48	837			439	161	SLU 78	0.19	No
ini.	3	29	-30.67	-382			439	161	SLU 76	0.42	No
fin.	3	169	-25.25	803			439	139	SLU 76	0.17	No
ini.	3	45	-31.51	-384			439	159	SLU 82	0.41	No
fin.	3	30	12.75	836			439	161	SLU 82	0.19	No

Sezione	γM	N	M	V	Vt	Vp	Vt fess. diag.	Vt,lim	Comb.	c.s.	Verifica
ini.	3	11	-24.96	-354			439	164	SLU 55	0.46	No
fin.	3	195	-33.81	713			439	134	SLU 55	0.19	No
ini.	3	9	-24.37	-347			439	164	SLU 52	0.47	No
fin.	3	197	-34.7	697			439	134	SLU 52	0.19	No
ini.	3	27	-30.09	-375			439	161	SLU 73	0.43	No
fin.	3	171	-26.15	787			439	138	SLU 73	0.18	No
ini.	3	42	-30.46	-383			439	159	SLU 80	0.42	No
fin.	3	37	10.84	828			439	160	SLU 80	0.19	No
ini.	3	13	-25.51	-346			439	163	SLU 68	0.47	No
fin.	3	195	-33.88	707			439	134	SLU 68	0.19	No
ini.	3	47	-32.09	-391			439	158	SLU 84	0.4	No
fin.	3	28	13.64	852			439	161	SLU 84	0.19	No
ini.	3	11	-24.93	-339			439	164	SLU 65	0.48	No
fin.	3	196	-34.77	691			439	134	SLU 65	0.19	No

Verifiche a pressoflessione delle travi in muratura in combinazioni sismiche

Sezione	γM	N	M	Mu	Comb.	c.s.	Verifica
ini.	2	1045	-388.33	741.78	SLV 13	1.91	Si
fin.	2	-2686	644.13	741.78	SLV 13	1.15	Si
ini.	2	2370	-378.67	741.78	SLV 9	1.96	Si
fin.	2	-3938	1128.57	741.78	SLV 9	0.66	No
ini.	2	-2102	170.03	741.78	SLV 12	4.36	Si
fin.	2	2791	-863.2	741.78	SLV 12	0.86	No
ini.	2	2164	-205.78	741.78	SLV 5	3.6	Si
fin.	2	-2993	946.27	741.78	SLV 5	0.78	No
ini.	2	-2307	342.92	741.78	SLV 8	2.16	Si
fin.	2	3736	-1045.5	741.78	SLV 8	0.71	No
ini.	2	2164	-205.78	741.78	SLV 6	3.6	Si
fin.	2	-2993	946.27	741.78	SLV 6	0.78	No
ini.	2	-2307	342.92	741.78	SLV 7	2.16	Si
fin.	2	3736	-1045.5	741.78	SLV 7	0.71	No
ini.	2	-2102	170.03	741.78	SLV 11	4.36	Si
fin.	2	2791	-863.2	741.78	SLV 11	0.86	No
ini.	2	1045	-388.33	741.78	SLV 14	1.91	Si
fin.	2	-2686	644.13	741.78	SLV 14	1.15	Si
ini.	2	2370	-378.67	741.78	SLV 10	1.96	Si
fin.	2	-3938	1128.57	741.78	SLV 10	0.66	No

Verifiche a taglio delle travi in muratura secondo §C8.7.1.3.1 in combinazioni sismiche

Sezione	γM	N	M	V	Vt	Vp	Vt fess. diag.	Vt,lim	Comb.	c.s.	Verifica
ini.	2	-982	352.58	-753			920	363	SLV 4	0.48	No
fin.	2	2484	-561.06	1124			659	0	SLV 4	0	No
ini.	2	2164	-205.78	487			659	0	SLV 6	0	No
fin.	2	-2993	946.27	-534			1457	526	SLV 6	0.98	No
ini.	2	-2307	342.92	-1145			1274	477	SLV 8	0.42	No
fin.	2	3736	-1045.5	1778			659	0	SLV 8	0	No
ini.	2	2370	-378.67	640			659	0	SLV 10	0	No
fin.	2	-3938	1128.57	-668			1709	587	SLV 10	0.88	No
ini.	2	-2307	342.92	-1145			1274	477	SLV 7	0.42	No
fin.	2	3736	-1045.5	1778			659	0	SLV 7	0	No
ini.	2	-2102	170.03	-992			1219	461	SLV 11	0.46	No
fin.	2	2791	-863.2	1645			659	0	SLV 11	0	No
ini.	2	-2102	170.03	-992			1219	461	SLV 12	0.46	No
fin.	2	2791	-863.2	1645			659	0	SLV 12	0	No
ini.	2	-982	352.58	-753			920	363	SLV 3	0.48	No
fin.	2	2484	-561.06	1124			659	0	SLV 3	0	No
ini.	2	2370	-378.67	640			659	0	SLV 9	0	No
fin.	2	-3938	1128.57	-668			1709	587	SLV 9	0.88	No
ini.	2	2164	-205.78	487			659	0	SLV 5	0	No
fin.	2	-2993	946.27	-534			1457	526	SLV 5	0.98	No

Tabella dei coefficienti di sicurezza minimi

Stato limite	Coeff.s.	Comb.	Verifica
PF_SLV	0.657	SLV 9	No
V_SLV	0	SLV 3	No
PF_SLU	7.442	SLU 83	Si
V_SLU	0.173	SLU 76	No

Trave di accoppiamento 41

Verifiche condotte secondo D.M. 17-01-18 (N.T.C.)

Dati geometrici

X ini.	Y ini.	Z ini.inf.	Z ini.sup.	H ini.	X fin.	Y fin.	Z fin.inf.	Z fin.sup	H fin.	Luce	Spessore	R. Trazione
-15.3	-3.254	2.77	4.35	1.58	-16.2	-3.254	2.77	4.35	1.58	0.9	0.28	30000

Caratteristiche del materiale

(Circolare 7 21-01-19 C8.5.I) Muratura in mattoni pieni e malta di calce LC2_Corti

fb_	fhk	fvk0	fhmedio	τ0	fv0	μ	ϕ	fvk,lim	E	G	FC
120000			172500	9000	20000	0.577	0.767	6500	320000000	128000000	1.2

Verifiche a pressoflessione delle travi in muratura in combinazioni non sismiche

Sezione	γM	N	M	Mu	Comb.	c.s.	Verifica
ini.	3	-1736	-834.53	3546.36	SLU 83	4.25	Si
fin.	3	-1736	-975.99	3546.36	SLU 83	3.63	Si
ini.	3	-1673	-688.37	3546.36	SLU 62	5.15	Si
fin.	3	-1673	-970.57	3546.36	SLU 62	3.65	Si

Sezione	γM	N	M	Mu	Comb.	c.s.	Verifica
ini.	3	-1647	-608.43	3546.36	SLU 58	5.83	Si
fin.	3	-1647	-1008.95	3546.36	SLU 58	3.51	Si
ini.	3	-1711	-754.59	3546.36	SLU 79	4.7	Si
fin.	3	-1711	-1014.37	3546.36	SLU 79	3.5	Si
ini.	3	-1539	-516.21	3546.36	SLU 48	6.87	Si
fin.	3	-1539	-982.01	3546.36	SLU 48	3.61	Si
ini.	3	-1538	-490.77	3546.36	SLU 50	7.23	Si
fin.	3	-1538	-985.63	3546.36	SLU 50	3.6	Si
ini.	3	-1712	-780.03	3546.36	SLU 77	4.55	Si
fin.	3	-1712	-1010.76	3546.36	SLU 77	3.51	Si
ini.	3	-1649	-633.87	3546.36	SLU 56	5.59	Si
fin.	3	-1649	-1005.33	3546.36	SLU 56	3.53	Si
ini.	3	-1601	-636.93	3546.36	SLU 71	5.57	Si
fin.	3	-1601	-991.05	3546.36	SLU 71	3.58	Si
ini.	3	-1603	-662.37	3546.36	SLU 69	5.35	Si
fin.	3	-1603	-987.44	3546.36	SLU 69	3.59	Si

Verifiche a taglio delle travi in muratura secondo §C8.7.1.3.1 in combinazioni non sismiche

Sezione	γM	N	M	V	Vt	Vp	Vt fess. diag.	Vt,lim	Comb.	c.s.	Verifica
ini.	3	-1711	-754.59	807			2388	942	SLU 79	1.17	Si
fin.	3	-1711	-1014.37	-1343			2388	942	SLU 79	0.7	No
ini.	3	-1358	-749.63	1264			2247	889	SLU 40	0.7	No
fin.	3	-1358	-546.31	-781			2247	889	SLU 40	1.14	Si
ini.	3	-1736	-834.53	1017			2398	946	SLU 83	0.93	No
fin.	3	-1736	-975.99	-1291			2398	946	SLU 83	0.73	No
ini.	3	-1538	-490.77	212			2319	916	SLU 50	4.33	Si
fin.	3	-1538	-985.63	-1271			2319	916	SLU 50	0.72	No
ini.	3	-1712	-780.03	839			2389	943	SLU 77	1.12	Si
fin.	3	-1712	-1010.76	-1311			2389	943	SLU 77	0.72	No
ini.	3	-1291	-681.81	1252			2220	878	SLU 31	0.7	No
fin.	3	-1291	-417.91	-635			2220	878	SLU 31	1.38	Si
ini.	3	-1601	-636.93	518			2344	926	SLU 71	1.79	Si
fin.	3	-1601	-991.05	-1265			2344	926	SLU 71	0.73	No
ini.	3	-1647	-608.43	500			2363	933	SLU 58	1.86	Si
fin.	3	-1647	-1008.95	-1350			2363	933	SLU 58	0.69	No
ini.	3	-1673	-688.37	710			2373	937	SLU 62	1.32	Si
fin.	3	-1673	-970.57	-1297			2373	937	SLU 62	0.72	No
ini.	3	-1649	-633.87	533			2363	933	SLU 56	1.75	Si
fin.	3	-1649	-1005.33	-1318			2363	933	SLU 56	0.71	No

Verifiche a pressoflessione delle travi in muratura in combinazioni sismiche

Sezione	γM	N	M	Mu	Comb.	c.s.	Verifica
ini.	2	19	-6972.12	5319.53	SLV 14	0.76	No
fin.	2	-252	3288.97	5319.53	SLV 14	1.62	Si
ini.	2	2466	-6151.24	5319.53	SLV 15	0.86	No
fin.	2	1688	4156.96	5319.53	SLV 15	1.28	Si
ini.	2	-4897	5077.54	5319.53	SLV 2	1.05	Si
fin.	2	-4120	-5543.74	5319.53	SLV 2	0.96	No
ini.	2	-2450	5898.42	5319.53	SLV 3	0.9	No
fin.	2	-2180	-4675.75	5319.53	SLV 3	1.14	Si
ini.	2	-2450	5898.42	5319.53	SLV 4	0.9	No
fin.	2	-2180	-4675.75	5319.53	SLV 4	1.14	Si
ini.	2	-4557	-3712.43	5319.53	SLV 10	1.43	Si
fin.	2	-3869	-815.14	5319.53	SLV 10	6.53	Si
ini.	2	-4557	-3712.43	5319.53	SLV 9	1.43	Si
fin.	2	-3869	-815.14	5319.53	SLV 9	6.53	Si
ini.	2	19	-6972.12	5319.53	SLV 13	0.76	No
fin.	2	-252	3288.97	5319.53	SLV 13	1.62	Si
ini.	2	-4897	5077.54	5319.53	SLV 1	1.05	Si
fin.	2	-4120	-5543.74	5319.53	SLV 1	0.96	No
ini.	2	2466	-6151.24	5319.53	SLV 16	0.86	No
fin.	2	1688	4156.96	5319.53	SLV 16	1.28	Si

Verifiche a taglio delle travi in muratura secondo §C8.7.1.3.1 in combinazioni sismiche

Sezione	γM	N	M	V	Vt	Vp	Vt fess. diag.	Vt,lim	Comb.	c.s.	Verifica
ini.	2	2466	-6151.24	12234			2556	0	SLV 15	0	No
fin.	2	1688	4156.96	11132			2556	468	SLV 15	0.04	No
ini.	2	19	-6972.12	12885			2556	958	SLV 13	0.07	No
fin.	2	-252	3288.97	11222			2657	1015	SLV 13	0.09	No
ini.	2	2466	-6151.24	12234			2556	0	SLV 16	0	No
fin.	2	1688	4156.96	11132			2556	468	SLV 16	0.04	No
ini.	2	-2450	5898.42	-11792			3536	1396	SLV 3	0.12	No
fin.	2	-2180	-4675.75	-12949			3427	1355	SLV 3	0.1	No
ini.	2	2125	2638.73	-4143			2556	191	SLV 8	0.05	No
fin.	2	1437	-571.64	-4627			2556	569	SLV 8	0.12	No
ini.	2	-2450	5898.42	-11792			3536	1396	SLV 4	0.12	No
fin.	2	-2180	-4675.75	-12949			3427	1355	SLV 4	0.1	No
ini.	2	3600	-976.17	3064			2556	0	SLV 12	0	No
fin.	2	2598	2078.17	2598			2556	0	SLV 12	0	No
ini.	2	2125	2638.73	-4143			2556	191	SLV 7	0.05	No
fin.	2	1437	-571.64	-4627			2556	569	SLV 7	0.12	No
ini.	2	19	-6972.12	12885			2556	958	SLV 14	0.07	No
fin.	2	-252	3288.97	11222			2657	1015	SLV 14	0.09	No
ini.	2	3600	-976.17	3064			2556	0	SLV 11	0	No
fin.	2	2598	2078.17	2598			2556	0	SLV 11	0	No

Tabella dei coefficienti di sicurezza minimi

Stato limite	Coeff.s.	Comb.	Verifica
PF_SLV	0.763	SLV 13	No
V_SLV	0	SLV 11	No

Stato limite	Coeff.s.	Comb.	Verifica
PF_SLU	3.496	SLU 79	Si
V_SLU	0.691	SLU 58	No

Trave di accoppiamento 42

Verifiche condotte secondo D.M. 17-01-18 (N.T.C.)

Dati geometrici

X ini.	Y ini.	Z ini.inf.	Z ini.sup.	H ini.	X fin.	Y fin.	Z fin.inf.	Z fin.sup	H fin.	Luce	Spessore	R. Trazione
-14.61	-4.784	3.78	4.35	0.57	-16.45	-4.784	3.78	4.35	0.57	1.84	0.3	30000

Caratteristiche del materiale

(Circolare 7 21-01-19 C8.5.I) Muratura in mattoni pieni e malta di calce LC2_Corti

fb_	fhk	fvk0	fhmedio	τ0	fv0	μ	ϕ	fvk,lim	E	G	FC
120000			172500	9000	20000	0.577	0.767	6500	320000000	128000000	1.2

Verifiche a pressoflessione delle travi in muratura in combinazioni non sismiche

Sezione	γM	N	M	Mu	Comb.	c.s.	Verifica
ini.	3	349	-100.2	494.52	SLU 79	4.94	Si
fin.	3	147	17.31	494.52	SLU 79	28.56	Si
ini.	3	370	-111.84	494.52	SLU 81	4.42	Si
fin.	3	166	11.73	494.52	SLU 81	42.14	Si
ini.	3	332	-106.5	494.52	SLU 41	4.64	Si
fin.	3	148	8.51	494.52	SLU 41	58.12	Si
ini.	3	351	-102.33	494.52	SLU 84	4.83	Si
fin.	3	210	-4.01	494.52	SLU 84	123.22	Si
ini.	3	350	-102.83	494.52	SLU 82	4.81	Si
fin.	3	212	-5.43	494.52	SLU 82	91.13	Si
ini.	3	371	-111.34	494.52	SLU 83	4.44	Si
fin.	3	165	13.15	494.52	SLU 83	37.62	Si
ini.	3	347	-100.24	494.52	SLU 74	4.93	Si
fin.	3	148	16.18	494.52	SLU 74	30.57	Si
ini.	3	311	-97.98	494.52	SLU 40	5.05	Si
fin.	3	195	-10.06	494.52	SLU 40	49.13	Si
ini.	3	330	-106.99	494.52	SLU 39	4.62	Si
fin.	3	149	7.1	494.52	SLU 39	69.7	Si
ini.	3	348	-99.74	494.52	SLU 77	4.96	Si
fin.	3	146	17.59	494.52	SLU 77	28.11	Si

Verifiche a taglio delle travi in muratura secondo §C8.7.1.3.1 in combinazioni non sismiche

Sezione	γM	N	M	V	Vt	Vp	Vt fess. diag.	Vt,lim	Comb.	c.s.	Verifica
ini.	3	327	-91.22	-318			439	108	SLU 75	0.34	No
fin.	3	193	-0.98	1546			439	134	SLU 75	0.09	No
ini.	3	371	-111.34	-296			439	98	SLU 83	0.33	No
fin.	3	165	13.15	1548			439	139	SLU 83	0.09	No
ini.	3	314	-85.67	-322			439	111	SLU 76	0.34	No
fin.	3	224	-12.7	1567			439	129	SLU 76	0.08	No
ini.	3	351	-102.33	-305			439	102	SLU 84	0.34	No
fin.	3	210	-4.01	1581			439	131	SLU 84	0.08	No
ini.	3	329	-90.73	-328			439	108	SLU 78	0.33	No
fin.	3	192	0.43	1574			439	135	SLU 78	0.09	No
ini.	3	350	-102.83	-294			439	103	SLU 82	0.35	No
fin.	3	212	-5.43	1553			439	131	SLU 82	0.08	No
ini.	3	294	-76.51	-331			439	115	SLU 63	0.35	No
fin.	3	192	-4.39	1506			439	135	SLU 63	0.09	No
ini.	3	329	-91.18	-326			439	107	SLU 80	0.33	No
fin.	3	192	0.15	1573			439	134	SLU 80	0.09	No
ini.	3	313	-86.17	-312			439	111	SLU 73	0.36	No
fin.	3	226	-14.11	1539			439	128	SLU 73	0.08	No
ini.	3	258	-59.85	-348			439	122	SLU 55	0.35	No
fin.	3	206	-13.08	1492			439	132	SLU 55	0.09	No

Verifiche a pressoflessione delle travi in muratura in combinazioni sismiche

Sezione	γM	N	M	Mu	Comb.	c.s.	Verifica
ini.	2	-2989	1425.11	741.78	SLV 2	0.52	No
fin.	2	2450	-1117.51	741.78	SLV 2	0.66	No
ini.	2	1652	-825.17	741.78	SLV 12	0.9	No
fin.	2	-853	557.48	741.78	SLV 12	1.33	Si
ini.	2	3141	-1334.79	741.78	SLV 13	0.56	No
fin.	2	-2106	1011.46	741.78	SLV 13	0.73	No
ini.	2	3444	-1545.41	741.78	SLV 16	0.48	No
fin.	2	-2264	1145.84	741.78	SLV 16	0.65	No
ini.	2	1652	-825.17	741.78	SLV 11	0.9	No
fin.	2	-853	557.48	741.78	SLV 11	1.33	Si
ini.	2	-2686	1214.49	741.78	SLV 4	0.61	No
fin.	2	2292	-983.13	741.78	SLV 4	0.75	No
ini.	2	-2989	1425.11	741.78	SLV 1	0.52	No
fin.	2	2450	-1117.51	741.78	SLV 1	0.66	No
ini.	2	3141	-1334.79	741.78	SLV 14	0.56	No
fin.	2	-2106	1011.46	741.78	SLV 14	0.73	No
ini.	2	-2686	1214.49	741.78	SLV 3	0.61	No
fin.	2	2292	-983.13	741.78	SLV 3	0.75	No
ini.	2	3444	-1545.41	741.78	SLV 15	0.48	No
fin.	2	-2264	1145.84	741.78	SLV 15	0.65	No

Verifiche a taglio delle travi in muratura secondo §C8.7.1.3.1 in combinazioni sismiche

Sezione	γM	N	M	V	Vt	Vp	Vt fess. diag.	Vt,lim	Comb.	c.s.	Verifica
ini.	2	-2686	1214.49	-1141			1375	504	SLV 4	0.44	No
fin.	2	2292	-983.13	584			659	0	SLV 4	0	No
ini.	2	1652	-825.17	577			659	0	SLV 12	0	No
fin.	2	-853	557.48	-1121			886	350	SLV 12	0.31	No
ini.	2	-1197	704.87	-1072			978	384	SLV 6	0.36	No
fin.	2	1040	-529.14	3293			659	0	SLV 6	0	No
ini.	2	-2989	1425.11	-1447			1456	525	SLV 1	0.36	No
fin.	2	2450	-1117.51	1882			659	0	SLV 1	0	No
ini.	2	3141	-1334.79	646			659	0	SLV 13	0	No
fin.	2	-2106	1011.46	1588			1220	461	SLV 13	0.29	No
ini.	2	3141	-1334.79	646			659	0	SLV 14	0	No
fin.	2	-2106	1011.46	1588			1220	461	SLV 14	0.29	No
ini.	2	-2989	1425.11	-1447			1456	525	SLV 2	0.36	No
fin.	2	2450	-1117.51	1882			659	0	SLV 2	0	No
ini.	2	-2686	1214.49	-1141			1375	504	SLV 3	0.44	No
fin.	2	2292	-983.13	584			659	0	SLV 3	0	No
ini.	2	-1197	704.87	-1072			978	384	SLV 5	0.36	No
fin.	2	1040	-529.14	3293			659	0	SLV 5	0	No
ini.	2	1652	-825.17	577			659	0	SLV 11	0	No
fin.	2	-853	557.48	-1121			886	350	SLV 11	0.31	No

Tabella dei coefficienti di sicurezza minimi

Stato limite	Coeff.s.	Comb.	Verifica
PF_SLV	0.48	SLV 15	No
V_SLV	0	SLV 1	No
PF_SLU	4.422	SLU 81	Si
V_SLU	0.082	SLU 76	No

Trave di accoppiamento 43

Verifiche condotte secondo D.M. 17-01-18 (N.T.C.)

Dati geometrici

X ini.	Y ini.	Z ini.inf.	Z ini.sup.	H ini.	X fin.	Y fin.	Z fin.inf.	Z fin.sup	H fin.	Luce	Spessore	R. Trazione
-18.663	1.046	2.77	4.35	1.58	-19.463	1.046	2.77	4.35	1.58	0.8	0.28	30000

Caratteristiche del materiale

(Circolare 7 21-01-19 C8.5.I) Muratura in mattoni pieni e malta di calce LC2_Corti

fb_	fhk	fvk0	fhmedio	τ0	fv0	μ	ϕ	fvk,lim	E	G	FC
120000			172500	9000	20000	0.577	0.767	6500	320000000	128000000	1.2

Verifiche a pressoflessione delle travi in muratura in combinazioni non sismiche

Sezione	γM	N	M	Mu	Comb.	c.s.	Verifica
ini.	3	-3154	-1130.33	3546.36	SLU 55	3.14	Si
fin.	3	-2666	-241.73	3546.36	SLU 55	14.67	Si
ini.	3	-3486	-1125.69	3546.36	SLU 78	3.15	Si
fin.	3	-3009	-408.34	3546.36	SLU 78	8.68	Si
ini.	3	-3421	-1181.68	3546.36	SLU 73	3	Si
fin.	3	-2929	-287.15	3546.36	SLU 73	12.35	Si
ini.	3	-3087	-1127.58	3546.36	SLU 65	3.15	Si
fin.	3	-2595	-219.18	3546.36	SLU 65	16.18	Si
ini.	3	-3579	-1129.99	3546.36	SLU 82	3.14	Si
fin.	3	-3108	-380.5	3546.36	SLU 82	9.32	Si
ini.	3	-3110	-1142.75	3546.36	SLU 68	3.1	Si
fin.	3	-2613	-236.7	3546.36	SLU 68	14.98	Si
ini.	3	-3602	-1145.17	3546.36	SLU 84	3.1	Si
fin.	3	-3126	-398.02	3546.36	SLU 84	8.91	Si
ini.	3	-3482	-1137.15	3546.36	SLU 80	3.12	Si
fin.	3	-3001	-386.41	3546.36	SLU 80	9.18	Si
ini.	3	-3444	-1196.85	3546.36	SLU 76	2.96	Si
fin.	3	-2947	-304.67	3546.36	SLU 76	11.64	Si
ini.	3	-3131	-1115.15	3546.36	SLU 52	3.18	Si
fin.	3	-2648	-224.21	3546.36	SLU 52	15.82	Si

Verifiche a taglio delle travi in muratura secondo §C8.7.1.3.1 in combinazioni non sismiche

Sezione	γM	N	M	V	Vt	Vp	Vt fess. diag.	Vt,lim	Comb.	c.s.	Verifica
ini.	3	-3602	-1145.17	2674			3145	1190	SLU 84	0.44	No
fin.	3	-3126	-398.02	-2782			2954	1132	SLU 84	0.41	No
ini.	3	-3486	-998.21	2246			3098	1176	SLU 74	0.52	No
fin.	3	-3045	-487.15	-2840			2922	1122	SLU 74	0.4	No
ini.	3	-2931	-829.26	1870			2876	1108	SLU 35	0.59	No
fin.	3	-2582	-448.16	-2658			2736	1063	SLU 35	0.4	No
ini.	3	-3024	-833.57	1998			2913	1120	SLU 39	0.56	No
fin.	3	-2681	-420.33	-2775			2776	1076	SLU 39	0.39	No
ini.	3	-2908	-814.09	1867			2867	1105	SLU 32	0.59	No
fin.	3	-2564	-430.65	-2614			2729	1061	SLU 32	0.41	No
ini.	3	-3509	-1013.38	2249			3107	1179	SLU 77	0.52	No
fin.	3	-3063	-504.67	-2884			2929	1125	SLU 77	0.39	No
ini.	3	-3505	-1024.85	2295			3106	1178	SLU 79	0.51	No
fin.	3	-3055	-482.74	-2821			2926	1124	SLU 79	0.4	No
ini.	3	-3625	-1032.86	2381			3154	1192	SLU 83	0.5	No
fin.	3	-3180	-494.35	-3045			2976	1139	SLU 83	0.37	No
ini.	3	-3602	-1017.69	2377			3144	1190	SLU 81	0.5	No
fin.	3	-3162	-476.83	-3001			2969	1137	SLU 81	0.38	No
ini.	3	-3047	-848.74	2001			2923	1123	SLU 41	0.56	No

Sezione	γM	N	M	V	Vt	Vp	Vt fess. diag.	Vt,lim	Comb.	c.s.	Verifica
fin.	3	-2699	-437.85	-2819			2783	1079	SLU 41	0.38	No

Verifiche a pressoflessione delle travi in muratura in combinazioni sismiche

Sezione	γM	N	M	Mu	Comb.	c.s.	Verifica
ini.	2	-2547	-5608.73	5319.53	SLV 16	0.95	No
fin.	2	-636	3407.08	5319.53	SLV 16	1.56	Si
ini.	2	-2081	-7531.91	5319.53	SLV 14	0.71	No
fin.	2	468	5032.94	5319.53	SLV 14	1.06	Si
ini.	2	-3248	4234.91	5319.53	SLV 8	1.26	Si
fin.	2	-4544	-4362.77	5319.53	SLV 8	1.22	Si
ini.	2	-3248	4234.91	5319.53	SLV 7	1.26	Si
fin.	2	-4544	-4362.77	5319.53	SLV 7	1.22	Si
ini.	2	-2547	-5608.73	5319.53	SLV 15	0.95	No
fin.	2	-636	3407.08	5319.53	SLV 15	1.56	Si
ini.	2	-2081	-7531.91	5319.53	SLV 13	0.71	No
fin.	2	468	5032.94	5319.53	SLV 13	1.06	Si
ini.	2	-2789	6083.48	5319.53	SLV 3	0.87	No
fin.	2	-4667	-5628.32	5319.53	SLV 3	0.95	No
ini.	2	-2789	6083.48	5319.53	SLV 4	0.87	No
fin.	2	-4667	-5628.32	5319.53	SLV 4	0.95	No
ini.	2	-1623	-5683.35	5319.53	SLV 10	0.94	No
fin.	2	344	3767.39	5319.53	SLV 10	1.41	Si
ini.	2	-1623	-5683.35	5319.53	SLV 9	0.94	No
fin.	2	344	3767.39	5319.53	SLV 9	1.41	Si

Verifiche a taglio delle travi in muratura secondo §C8.7.1.3.1 in combinazioni sismiche

Sezione	γM	N	M	V	Vt	Vp	Vt fess. diag.	Vt,lim	Comb.	c.s.	Verifica
ini.	2	-2081	-7531.91	19084			3388	1340	SLV 14	0.07	No
fin.	2	468	5032.94	12523			2556	854	SLV 14	0.07	No
ini.	2	-2789	6083.48	-15854			3671	1446	SLV 3	0.09	No
fin.	2	-4667	-5628.32	-15891			4422	1696	SLV 3	0.11	No
ini.	2	-2081	-7531.91	19084			3388	1340	SLV 13	0.07	No
fin.	2	468	5032.94	12523			2556	854	SLV 13	0.07	No
ini.	2	-2547	-5608.73	13933			3574	1411	SLV 16	0.1	No
fin.	2	-636	3407.08	8105			2810	1091	SLV 16	0.13	No
ini.	2	-2547	-5608.73	13933			3574	1411	SLV 15	0.1	No
fin.	2	-636	3407.08	8105			2810	1091	SLV 15	0.13	No
ini.	2	-2323	4160.3	-10704			3485	1377	SLV 2	0.13	No
fin.	2	-3563	-4002.46	-11474			3981	1554	SLV 2	0.14	No
ini.	2	-1623	-5683.35	14667			3205	1266	SLV 9	0.09	No
fin.	2	344	3767.39	9278			2556	884	SLV 9	0.1	No
ini.	2	-1623	-5683.35	14667			3205	1266	SLV 10	0.09	No
fin.	2	344	3767.39	9278			2556	884	SLV 10	0.1	No
ini.	2	-2323	4160.3	-10704			3485	1377	SLV 1	0.13	No
fin.	2	-3563	-4002.46	-11474			3981	1554	SLV 1	0.14	No
ini.	2	-2789	6083.48	-15854			3671	1446	SLV 4	0.09	No
fin.	2	-4667	-5628.32	-15891			4422	1696	SLV 4	0.11	No

Tabella dei coefficienti di sicurezza minimi

Stato limite	Coeff.s.	Comb.	Verifica
PF_SLV	0.706	SLV 13	No
V_SLV	0.068	SLV 13	No
PF_SLU	2.963	SLU 76	Si
V_SLU	0.374	SLU 83	No

Trave di accoppiamento 44

Verifiche condotte secondo D.M. 17-01-18 (N.T.C.)

Dati geometrici

X ini.	Y ini.	Z ini.inf.	Z ini.sup.	H ini.	X fin.	Y fin.	Z fin.inf.	Z fin.sup	H fin.	Luce	Spessore	R. Trazione
-12.543	1.046	2.77	4.35	1.58	-13.543	1.046	2.77	4.35	1.58	1	0.28	30000

Caratteristiche del materiale

(Circolare 7 21-01-19 C8.5.I) Muratura in mattoni pieni e malta di calce LC2_Corti

fb_	fhk	fvk0	fhmedio	τ0	fv0	μ	ϕ	fvk,lim	E	G	FC
120000			172500	9000	20000	0.577	0.767	6500	320000000	128000000	1.2

Verifiche a pressoflessione delle travi in muratura in combinazioni non sismiche

Sezione	γM	N	M	Mu	Comb.	c.s.	Verifica
ini.	3	-4735	435.05	3546.36	SLU 75	8.15	Si
fin.	3	-4735	323.09	3546.36	SLU 75	10.98	Si
ini.	3	-4719	448.39	3546.36	SLU 76	7.91	Si
fin.	3	-4719	334.9	3546.36	SLU 76	10.59	Si
ini.	3	-4768	443.68	3546.36	SLU 78	7.99	Si
fin.	3	-4768	388.06	3546.36	SLU 78	9.14	Si
ini.	3	-4913	451.29	3546.36	SLU 82	7.86	Si
fin.	3	-4913	243.73	3546.36	SLU 82	14.55	Si
ini.	3	-4741	444.36	3546.36	SLU 80	7.98	Si
fin.	3	-4741	388.8	3546.36	SLU 80	9.12	Si
ini.	3	-4929	440.93	3546.36	SLU 83	8.04	Si
fin.	3	-4929	292.1	3546.36	SLU 83	12.14	Si
ini.	3	-4430	434.82	3546.36	SLU 63	8.16	Si
fin.	3	-4430	316.38	3546.36	SLU 63	11.21	Si
ini.	3	-4896	432.3	3546.36	SLU 81	8.2	Si
fin.	3	-4896	227.12	3546.36	SLU 81	15.61	Si
ini.	3	-4946	459.92	3546.36	SLU 84	7.71	Si

Sezione	γM	N	M	Mu	Comb.	c.s.	Verifica
fin.	3	-4946	308.71	3546.36	SLU 84	11.49	Si
ini.	3	-4686	439.75	3546.36	SLU 73	8.06	Si
fin.	3	-4686	269.92	3546.36	SLU 73	13.14	Si

Verifiche a taglio delle travi in muratura secondo §C8.7.1.3.1 in combinazioni non sismiche

Sezione	γM	N	M	V	Vt	Vp	Vt fess. diag.	Vt,lim	Comb.	c.s.	Verifica
ini.	3	-4896	432.3	853			3662	1333	SLU 81	1.56	Si
fin.	3	-4896	227.12	-1128			3662	1333	SLU 81	1.18	Si
ini.	3	-4913	451.29	851			3669	1334	SLU 82	1.57	Si
fin.	3	-4913	243.73	-1131			3669	1334	SLU 82	1.18	Si
ini.	3	-4379	407.2	792			3455	1277	SLU 60	1.61	Si
fin.	3	-4379	234.79	-1000			3455	1277	SLU 60	1.28	Si
ini.	3	-4205	363.56	699			3386	1258	SLU 39	1.8	Si
fin.	3	-4205	159.29	-1004			3386	1258	SLU 39	1.25	Si
ini.	3	-4396	426.19	790			3462	1279	SLU 61	1.62	Si
fin.	3	-4396	251.41	-1003			3462	1279	SLU 61	1.28	Si
ini.	3	-4929	440.93	909			3675	1336	SLU 83	1.47	Si
fin.	3	-4929	292.1	-1072			3675	1336	SLU 83	1.25	Si
ini.	3	-4686	439.75	833			3578	1310	SLU 73	1.57	Si
fin.	3	-4686	269.92	-1037			3578	1310	SLU 73	1.26	Si
ini.	3	-4256	391.18	753			3406	1264	SLU 42	1.68	Si
fin.	3	-4256	240.87	-950			3406	1264	SLU 42	1.33	Si
ini.	3	-4222	382.55	696			3393	1260	SLU 40	1.81	Si
fin.	3	-4222	175.9	-1006			3393	1260	SLU 40	1.25	Si
ini.	3	-4946	459.92	907			3682	1338	SLU 84	1.48	Si
fin.	3	-4946	308.71	-1074			3682	1338	SLU 84	1.25	Si

Verifiche a pressoflessione delle travi in muratura in combinazioni sismiche

Sezione	γM	N	M	Mu	Comb.	c.s.	Verifica
ini.	2	-5825	-670.63	5319.53	SLV 4	7.93	Si
fin.	2	-5517	-7464.33	5319.53	SLV 4	0.71	No
ini.	2	-5531	-546.62	5319.53	SLV 1	9.73	Si
fin.	2	-5412	-8059.04	5319.53	SLV 1	0.66	No
ini.	2	-5825	-670.63	5319.53	SLV 3	7.93	Si
fin.	2	-5517	-7464.33	5319.53	SLV 3	0.71	No
ini.	2	-2947	341.36	5319.53	SLV 12	15.58	Si
fin.	2	-2695	3586.27	5319.53	SLV 12	1.48	Si
ini.	2	-573	1232.85	5319.53	SLV 14	4.31	Si
fin.	2	-881	7874.48	5319.53	SLV 14	0.68	No
ini.	2	-868	1108.85	5319.53	SLV 15	4.8	Si
fin.	2	-986	8469.18	5319.53	SLV 15	0.63	No
ini.	2	-5531	-546.62	5319.53	SLV 2	9.73	Si
fin.	2	-5412	-8059.04	5319.53	SLV 2	0.66	No
ini.	2	-573	1232.85	5319.53	SLV 13	4.31	Si
fin.	2	-881	7874.48	5319.53	SLV 13	0.68	No
ini.	2	-868	1108.85	5319.53	SLV 16	4.8	Si
fin.	2	-986	8469.18	5319.53	SLV 16	0.63	No
ini.	2	-2947	341.36	5319.53	SLV 11	15.58	Si
fin.	2	-2695	3586.27	5319.53	SLV 11	1.48	Si

Verifiche a taglio delle travi in muratura secondo §C8.7.1.3.1 in combinazioni sismiche

Sezione	γM	N	M	V	Vt	Vp	Vt fess. diag.	Vt,lim	Comb.	c.s.	Verifica
ini.	2	-5825	-670.63	-6070			4886	1833	SLV 3	0.3	No
fin.	2	-5517	-7464.33	-7925			4763	1798	SLV 3	0.23	No
ini.	2	-573	1232.85	7295			2785	1079	SLV 14	0.15	No
fin.	2	-881	7874.48	6604			2908	1137	SLV 14	0.17	No
ini.	2	-5531	-546.62	-6604			4768	1799	SLV 2	0.27	No
fin.	2	-5412	-8059.04	-8395			4720	1785	SLV 2	0.21	No
ini.	2	-868	1108.85	7829			2903	1135	SLV 16	0.14	No
fin.	2	-986	8469.18	7074			2950	1156	SLV 16	0.16	No
ini.	2	-2947	341.36	3586			3734	1469	SLV 12	0.41	No
fin.	2	-2695	3586.27	2373			3634	1432	SLV 12	0.6	No
ini.	2	-5531	-546.62	-6604			4768	1799	SLV 1	0.27	No
fin.	2	-5412	-8059.04	-8395			4720	1785	SLV 1	0.21	No
ini.	2	-2947	341.36	3586			3734	1469	SLV 11	0.41	No
fin.	2	-2695	3586.27	2373			3634	1432	SLV 11	0.6	No
ini.	2	-5825	-670.63	-6070			4886	1833	SLV 4	0.3	No
fin.	2	-5517	-7464.33	-7925			4763	1798	SLV 4	0.23	No
ini.	2	-868	1108.85	7829			2903	1135	SLV 15	0.14	No
fin.	2	-986	8469.18	7074			2950	1156	SLV 15	0.16	No
ini.	2	-573	1232.85	7295			2785	1079	SLV 13	0.15	No
fin.	2	-881	7874.48	6604			2908	1137	SLV 13	0.17	No

Tabella dei coefficienti di sicurezza minimi

Stato limite	Coeff.s.	Comb.	Verifica
PF_SLV	0.628	SLV 15	No
V_SLV	0.145	SLV 15	No
PF_SLU	7.711	SLU 84	Si
V_SLU	1.18	SLU 82	Si

Trave di accoppiamento 45

Verifiche condotte secondo D.M. 17-01-18 (N.T.C.)

Dati geometrici

X ini.	Y ini.	Z ini.inf.	Z ini.sup.	H ini.	X fin.	Y fin.	Z fin.inf.	Z fin.sup	H fin.	Luce	Spessore	R. Trazione
-11.163	1.046	3.17	4.35	1.18	-12.283	1.046	3.17	4.35	1.18	1.12	0.28	30000

Caratteristiche del materiale

(Circolare 7 21-01-19 C8.5.I) Muratura in mattoni pieni e malta di calce LC2_Corti

fb_	fhk	fvk0	fhmedio	τ0	fv0	μ	ϕ	fvk,lim	E	G	FC
120000			172500	9000	20000	0.577	0.767	6500	320000000	128000000	1.2

Verifiche a pressoflessione delle travi in muratura in combinazioni non sismiche

Sezione	γM	N	M	Mu	Comb.	c.s.	Verifica
ini.	3	-4779	-1134.89	1978.03	SLU 82	1.74	Si
fin.	3	-4779	-84.63	1978.03	SLU 82	23.37	Si
ini.	3	-4588	-1181.21	1978.03	SLU 79	1.67	Si
fin.	3	-4588	-80.92	1978.03	SLU 79	24.44	Si
ini.	3	-4587	-1127.91	1978.03	SLU 76	1.75	Si
fin.	3	-4587	-68.72	1978.03	SLU 76	28.78	Si
ini.	3	-4791	-1187.95	1978.03	SLU 83	1.67	Si
fin.	3	-4791	-88.66	1978.03	SLU 83	22.31	Si
ini.	3	-4761	-1135.25	1978.03	SLU 81	1.74	Si
fin.	3	-4761	-96.89	1978.03	SLU 81	20.41	Si
ini.	3	-4808	-1187.59	1978.03	SLU 84	1.67	Si
fin.	3	-4808	-76.4	1978.03	SLU 84	25.89	Si
ini.	3	-4605	-1180.85	1978.03	SLU 80	1.68	Si
fin.	3	-4605	-68.66	1978.03	SLU 80	28.81	Si
ini.	3	-4614	-1179.11	1978.03	SLU 77	1.68	Si
fin.	3	-4614	-83.18	1978.03	SLU 77	23.78	Si
ini.	3	-4632	-1178.75	1978.03	SLU 78	1.68	Si
fin.	3	-4632	-70.92	1978.03	SLU 78	27.89	Si
ini.	3	-4585	-1126.41	1978.03	SLU 74	1.76	Si
fin.	3	-4585	-91.41	1978.03	SLU 74	21.64	Si

Verifiche a taglio delle travi in muratura secondo §C8.7.1.3.1 in combinazioni non sismiche

Sezione	γM	N	M	V	Vt	Vp	Vt fess. diag.	Vt,lim	Comb.	c.s.	Verifica
ini.	3	-4602	-1126.05	1995			3113	1090	SLU 75	0.55	No
fin.	3	-4602	-79.15	-154			3113	1090	SLU 75	7.06	Si
ini.	3	-4761	-1135.25	2074			3177	1105	SLU 81	0.53	No
fin.	3	-4761	-96.89	-251			3177	1105	SLU 81	4.41	Si
ini.	3	-4587	-1127.91	2006			3107	1088	SLU 76	0.54	No
fin.	3	-4587	-68.72	-143			3107	1088	SLU 76	7.59	Si
ini.	3	-4632	-1178.75	2049			3125	1093	SLU 78	0.53	No
fin.	3	-4632	-70.92	-100			3125	1093	SLU 78	10.93	Si
ini.	3	-4614	-1179.11	2039			3118	1091	SLU 77	0.54	No
fin.	3	-4614	-83.18	-111			3118	1091	SLU 77	9.87	Si
ini.	3	-4605	-1180.85	2053			3115	1090	SLU 80	0.53	No
fin.	3	-4605	-68.66	-96			3115	1090	SLU 80	11.35	Si
ini.	3	-4791	-1187.95	2129			3189	1108	SLU 83	0.52	No
fin.	3	-4791	-88.66	-196			3189	1108	SLU 83	5.64	Si
ini.	3	-4588	-1181.21	2043			3108	1088	SLU 79	0.53	No
fin.	3	-4588	-80.92	-107			3108	1088	SLU 79	10.2	Si
ini.	3	-4808	-1187.59	2139			3196	1109	SLU 84	0.52	No
fin.	3	-4808	-76.4	-186			3196	1109	SLU 84	5.97	Si
ini.	3	-4779	-1134.89	2085			3184	1106	SLU 82	0.53	No
fin.	3	-4779	-84.63	-240			3184	1106	SLU 82	4.61	Si

Verifiche a pressoflessione delle travi in muratura in combinazioni sismiche

Sezione	γM	N	M	Mu	Comb.	c.s.	Verifica
ini.	2	-409	-7410.92	2967.04	SLV 13	0.4	No
fin.	2	-298	1230.46	2967.04	SLV 13	2.41	Si
ini.	2	-2292	-3386.14	2967.04	SLV 9	0.88	No
fin.	2	-1900	535.12	2967.04	SLV 9	5.54	Si
ini.	2	-5812	5944.08	2967.04	SLV 4	0.5	No
fin.	2	-5922	-1370.89	2967.04	SLV 4	2.16	Si
ini.	2	-414	-6982.69	2967.04	SLV 16	0.42	No
fin.	2	-540	1088.61	2967.04	SLV 16	2.73	Si
ini.	2	-409	-7410.92	2967.04	SLV 14	0.4	No
fin.	2	-298	1230.46	2967.04	SLV 14	2.41	Si
ini.	2	-2292	-3386.14	2967.04	SLV 10	0.88	No
fin.	2	-1900	535.12	2967.04	SLV 10	5.54	Si
ini.	2	-414	-6982.69	2967.04	SLV 15	0.42	No
fin.	2	-540	1088.61	2967.04	SLV 15	2.73	Si
ini.	2	-5806	5515.85	2967.04	SLV 1	0.54	No
fin.	2	-5681	-1229.04	2967.04	SLV 1	2.41	Si
ini.	2	-5812	5944.08	2967.04	SLV 3	0.5	No
fin.	2	-5922	-1370.89	2967.04	SLV 3	2.16	Si
ini.	2	-5806	5515.85	2967.04	SLV 2	0.54	No
fin.	2	-5681	-1229.04	2967.04	SLV 2	2.41	Si

Verifiche a taglio delle travi in muratura secondo §C8.7.1.3.1 in combinazioni sismiche

Sezione	γM	N	M	V	Vt	Vp	Vt fess. diag.	Vt,lim	Comb.	c.s.	Verifica
ini.	2	-409	-7410.92	8625			2072	802	SLV 14	0.09	No
fin.	2	-298	1230.46	6878			2028	780	SLV 14	0.11	No
ini.	2	-2292	-3386.14	4038			2825	1110	SLV 10	0.27	No
fin.	2	-1900	535.12	2544			2669	1053	SLV 10	0.41	No
ini.	2	-2292	-3386.14	4038			2825	1110	SLV 9	0.27	No
fin.	2	-1900	535.12	2544			2669	1053	SLV 9	0.41	No
ini.	2	-414	-6982.69	8260			2074	803	SLV 15	0.1	No
fin.	2	-540	1088.61	6509			2125	827	SLV 15	0.13	No
ini.	2	-414	-6982.69	8260			2074	803	SLV 16	0.1	No
fin.	2	-540	1088.61	6509			2125	827	SLV 16	0.13	No
ini.	2	-5806	5515.85	-5701			4231	1526	SLV 1	0.27	No
fin.	2	-5681	-1229.04	-6737			4181	1513	SLV 1	0.22	No
ini.	2	-409	-7410.92	8625			2072	802	SLV 13	0.09	No
fin.	2	-298	1230.46	6878			2028	780	SLV 13	0.11	No

Sezione	γM	N	M	V	Vt	Vp	Vt fess. diag.	Vt,lim	Comb.	c.s.	Verifica
ini.	2	-5812	5944.08	-6067			4233	1527	SLV 3	0.25	No
fin.	2	-5922	-1370.89	-7107			4277	1538	SLV 3	0.22	No
ini.	2	-5812	5944.08	-6067			4233	1527	SLV 4	0.25	No
fin.	2	-5922	-1370.89	-7107			4277	1538	SLV 4	0.22	No
ini.	2	-5806	5515.85	-5701			4231	1526	SLV 2	0.27	No
fin.	2	-5681	-1229.04	-6737			4181	1513	SLV 2	0.22	No

Tabella dei coefficienti di sicurezza minimi

Stato limite	Coeff.s.	Comb.	Verifica
PF_SLV	0.4	SLV 13	No
V_SLV	0.093	SLV 13	No
PF_SLU	1.665	SLU 83	Si
V_SLU	0.518	SLU 84	No

Trave di accoppiamento 46

Verifiche condotte secondo D.M. 17-01-18 (N.T.C.)

Dati geometrici

X ini.	Y ini.	Z ini.inf.	Z ini.sup.	H ini.	X fin.	Y fin.	Z fin.inf.	Z fin.sup	H fin.	Luce	Spessore	R. Trazione
-4.168	1.046	2.77	4.35	1.58	-4.968	1.046	2.77	4.35	1.58	0.8	0.28	30000

Caratteristiche del materiale

(Circolare 7 21-01-19 C8.5.I) Muratura in mattoni pieni e malta di calce LC2_Corti

fb_	fhk	fvk0	fhmedio	τ0	fv0	μ	ϕ	fvk,lim	E	G	FC
120000			172500	9000	20000	0.577	0.767	6500	320000000	128000000	1.2

Verifiche a pressoflessione delle travi in muratura in combinazioni non sismiche

Sezione	γM	N	M	Mu	Comb.	c.s.	Verifica
ini.	3	-4091	-1773.74	3546.36	SLU 81	2	Si
fin.	3	-2748	397.01	3546.36	SLU 81	8.93	Si
ini.	3	-4091	-1804.72	3546.36	SLU 79	1.97	Si
fin.	3	-2667	413.87	3546.36	SLU 79	8.57	Si
ini.	3	-4061	-1760.53	3546.36	SLU 80	2.01	Si
fin.	3	-2716	370.26	3546.36	SLU 80	9.58	Si
ini.	3	-4183	-1827.85	3546.36	SLU 83	1.94	Si
fin.	3	-2768	421.75	3546.36	SLU 83	8.41	Si
ini.	3	-4112	-1824.39	3546.36	SLU 77	1.94	Si
fin.	3	-2666	421.72	3546.36	SLU 77	8.41	Si
ini.	3	-4082	-1780.21	3546.36	SLU 78	1.99	Si
fin.	3	-2715	378.11	3546.36	SLU 78	9.38	Si
ini.	3	-3991	-1726.09	3546.36	SLU 75	2.05	Si
fin.	3	-2695	353.36	3546.36	SLU 75	10.04	Si
ini.	3	-4062	-1729.56	3546.36	SLU 82	2.05	Si
fin.	3	-2797	353.4	3546.36	SLU 82	10.04	Si
ini.	3	-4020	-1770.28	3546.36	SLU 74	2	Si
fin.	3	-2646	396.97	3546.36	SLU 74	8.93	Si
ini.	3	-4154	-1783.67	3546.36	SLU 84	1.99	Si
fin.	3	-2817	378.14	3546.36	SLU 84	9.38	Si

Verifiche a taglio delle travi in muratura secondo §C8.7.1.3.1 in combinazioni non sismiche

Sezione	γM	N	M	V	Vt	Vp	Vt fess. diag.	Vt,lim	Comb.	c.s.	Verifica
ini.	3	-3991	-1726.09	9775			3300	1234	SLU 75	0.13	No
fin.	3	-2695	353.36	-2327			2782	1078	SLU 75	0.46	No
ini.	3	-4082	-1780.21	10047			3337	1245	SLU 78	0.12	No
fin.	3	-2715	378.11	-2262			2790	1081	SLU 78	0.48	No
ini.	3	-4154	-1783.67	10163			3365	1253	SLU 84	0.12	No
fin.	3	-2817	378.14	-2437			2831	1094	SLU 84	0.45	No
ini.	3	-4062	-1729.56	9892			3328	1242	SLU 82	0.13	No
fin.	3	-2797	353.4	-2502			2823	1091	SLU 82	0.44	No
ini.	3	-4183	-1827.85	10386			3377	1256	SLU 83	0.12	No
fin.	3	-2768	421.75	-2281			2811	1088	SLU 83	0.48	No
ini.	3	-4091	-1773.74	10114			3340	1246	SLU 81	0.12	No
fin.	3	-2748	397.01	-2346			2803	1085	SLU 81	0.46	No
ini.	3	-4112	-1824.39	10269			3348	1248	SLU 77	0.12	No
fin.	3	-2666	421.72	-2107			2770	1074	SLU 77	0.51	No
ini.	3	-4061	-1760.53	9933			3328	1242	SLU 80	0.13	No
fin.	3	-2716	370.26	-2259			2790	1081	SLU 80	0.48	No
ini.	3	-4020	-1770.28	9998			3312	1238	SLU 74	0.12	No
fin.	3	-2646	396.97	-2172			2762	1072	SLU 74	0.49	No
ini.	3	-4091	-1804.72	10156			3340	1246	SLU 79	0.12	No
fin.	3	-2667	413.87	-2103			2770	1074	SLU 79	0.51	No

Verifiche a pressoflessione delle travi in muratura in combinazioni sismiche

Sezione	γM	N	M	Mu	Comb.	c.s.	Verifica
ini.	2	-6058	-3824.25	5319.53	SLV 16	1.39	Si
fin.	2	-552	2164.52	5319.53	SLV 16	2.46	Si
ini.	2	-140	1432.04	5319.53	SLV 4	3.71	Si
fin.	2	-3637	-1862.52	5319.53	SLV 4	2.86	Si
ini.	2	-5281	-3786.49	5319.53	SLV 13	1.4	Si
fin.	2	-32	2314.39	5319.53	SLV 13	2.3	Si
ini.	2	-2304	-1902.73	5319.53	SLV 9	2.8	Si
fin.	2	-504	1079.77	5319.53	SLV 9	4.93	Si
ini.	2	-140	1432.04	5319.53	SLV 3	3.71	Si
fin.	2	-3637	-1862.52	5319.53	SLV 3	2.86	Si
ini.	2	-2304	-1902.73	5319.53	SLV 10	2.8	Si
fin.	2	-504	1079.77	5319.53	SLV 10	4.93	Si

Sezione	γM	N	M	Mu	Comb.	c.s.	Verifica
ini.	2	-4892	-2028.61	5319.53	SLV 11	2.62	Si
fin.	2	-2239	580.21	5319.53	SLV 11	9.17	Si
ini.	2	-5281	-3786.49	5319.53	SLV 14	1.4	Si
fin.	2	-32	2314.39	5319.53	SLV 14	2.3	Si
ini.	2	-6058	-3824.25	5319.53	SLV 15	1.39	Si
fin.	2	-552	2164.52	5319.53	SLV 15	2.46	Si
ini.	2	-4892	-2028.61	5319.53	SLV 12	2.62	Si
fin.	2	-2239	580.21	5319.53	SLV 12	9.17	Si

Verifiche a taglio delle travi in muratura secondo §C8.7.1.3.1 in combinazioni sismiche

Sezione	γM	N	M	V	Vt	Vp	Vt fess. diag.	Vt,lim	Comb.	c.s.	Verifica
ini.	2	-140	1432.04	-3748			2612	992	SLV 3	0.26	No
fin.	2	-3637	-1862.52	-10861			4010	1564	SLV 3	0.14	No
ini.	2	636	1469.81	-4751			2556	812	SLV 1	0.17	No
fin.	2	-3116	-1712.65	-11319			3802	1493	SLV 1	0.13	No
ini.	2	-4892	-2028.61	11487			4512	1724	SLV 11	0.15	No
fin.	2	-2239	580.21	2080			3451	1364	SLV 11	0.66	No
ini.	2	-4892	-2028.61	11487			4512	1724	SLV 12	0.15	No
fin.	2	-2239	580.21	2080			3451	1364	SLV 12	0.66	No
ini.	2	636	1469.81	-4751			2556	812	SLV 2	0.17	No
fin.	2	-3116	-1712.65	-11319			3802	1493	SLV 2	0.13	No
ini.	2	-140	1432.04	-3748			2612	992	SLV 4	0.26	No
fin.	2	-3637	-1862.52	-10861			4010	1564	SLV 4	0.14	No
ini.	2	-6058	-3824.25	17892			4979	1860	SLV 15	0.1	No
fin.	2	-552	2164.52	8225			2777	1075	SLV 15	0.13	No
ini.	2	-5281	-3786.49	16889			4668	1770	SLV 13	0.1	No
fin.	2	-32	2314.39	7766			2568	969	SLV 13	0.12	No
ini.	2	-5281	-3786.49	16889			4668	1770	SLV 14	0.1	No
fin.	2	-32	2314.39	7766			2568	969	SLV 14	0.12	No
ini.	2	-6058	-3824.25	17892			4979	1860	SLV 16	0.1	No
fin.	2	-552	2164.52	8225			2777	1075	SLV 16	0.13	No

Tabella dei coefficienti di sicurezza minimi

Stato limite	Coeff.s.	Comb.	Verifica
PF_SLV	1.391	SLV 15	Si
V_SLV	0.104	SLV 15	No
PF_SLU	1.94	SLU 83	Si
V_SLU	0.121	SLU 83	No

Trave di accoppiamento 47

Verifiche condotte secondo D.M. 17-01-18 (N.T.C.)

Dati geometrici

X ini.	Y ini.	Z ini.inf.	Z ini.sup.	H ini.	X fin.	Y fin.	Z fin.inf.	Z fin.sup	H fin.	Luce	Spessore	R. Trazione
-11.093	3.334	2.77	4.35	1.58	-11.893	3.334	2.77	4.35	1.58	0.8	0.14	30000

Caratteristiche del materiale

(Circolare 7 21-01-19 C8.5.I) Muratura in mattoni pieni e malta di calce LC2_Corti

fb_	fhk	fvk0	fhmedio	τ0	fv0	μ	ϕ	fvk,lim	E	G	FC
120000			172500	9000	20000	0.577	0.767	6500	320000000	128000000	1.2

Verifiche a pressoflessione delle travi in muratura in combinazioni non sismiche

Sezione	γM	N	M	Mu	Comb.	c.s.	Verifica
ini.	3	-2087	771.22	1773.18	SLU 76	2.3	Si
fin.	3	-2087	3512.84	1773.18	SLU 76	0.5	No
ini.	3	-2230	848.09	1773.18	SLU 83	2.09	Si
fin.	3	-2230	3761.06	1773.18	SLU 83	0.47	No
ini.	3	-2107	771.44	1773.18	SLU 77	2.3	Si
fin.	3	-2107	3549.96	1773.18	SLU 77	0.5	No
ini.	3	-2109	774.22	1773.18	SLU 75	2.29	Si
fin.	3	-2109	3555.3	1773.18	SLU 75	0.5	No
ini.	3	-2231	850.95	1773.18	SLU 81	2.08	Si
fin.	3	-2231	3766.73	1773.18	SLU 81	0.47	No
ini.	3	-2231	850.88	1773.18	SLU 82	2.08	Si
fin.	3	-2231	3766.4	1773.18	SLU 82	0.47	No
ini.	3	-2088	774.07	1773.18	SLU 73	2.29	Si
fin.	3	-2088	3518.51	1773.18	SLU 73	0.5	No
ini.	3	-2230	848.02	1773.18	SLU 84	2.09	Si
fin.	3	-2230	3760.73	1773.18	SLU 84	0.47	No
ini.	3	-2107	771.36	1773.18	SLU 78	2.3	Si
fin.	3	-2107	3549.63	1773.18	SLU 78	0.5	No
ini.	3	-2109	774.29	1773.18	SLU 74	2.29	Si
fin.	3	-2109	3555.63	1773.18	SLU 74	0.5	No

Verifiche a taglio delle travi in muratura secondo §C8.7.1.3.1 in combinazioni non sismiche

Sezione	γM	N	M	V	Vt	Vp	Vt fess. diag.	Vt,lim	Comb.	c.s.	Verifica
ini.	3	-2109	774.22	4063			1695	630	SLU 75	0.16	No
fin.	3	-2109	3555.3	2884			1695	630	SLU 75	0.22	No
ini.	3	-2230	848.02	4277			1744	643	SLU 84	0.15	No
fin.	3	-2230	3760.73	2999			1744	643	SLU 84	0.21	No
ini.	3	-2107	771.36	4059			1695	630	SLU 78	0.16	No
fin.	3	-2107	3549.63	2880			1695	630	SLU 78	0.22	No
ini.	3	-2109	774.29	4063			1695	630	SLU 74	0.16	No
fin.	3	-2109	3555.63	2884			1695	630	SLU 74	0.22	No
ini.	3	-2231	850.95	4280			1744	643	SLU 81	0.15	No
fin.	3	-2231	3766.73	3003			1744	643	SLU 81	0.21	No

Sezione	γM	N	M	V	Vt	Vp	Vt fess. diag.	Vt,lim	Comb.	c.s.	Verifica
ini.	3	-2107	771.44	4059			1695	630	SLU 77	0.16	No
fin.	3	-2107	3549.96	2881			1695	630	SLU 77	0.22	No
ini.	3	-2231	850.88	4280			1744	643	SLU 82	0.15	No
fin.	3	-2231	3766.4	3003			1744	643	SLU 82	0.21	No
ini.	3	-2088	774.07	4017			1687	628	SLU 73	0.16	No
fin.	3	-2088	3518.51	2838			1687	628	SLU 73	0.22	No
ini.	3	-2087	771.22	4013			1686	627	SLU 76	0.16	No
fin.	3	-2087	3512.84	2835			1686	627	SLU 76	0.22	No
ini.	3	-2230	848.09	4277			1744	643	SLU 83	0.15	No
fin.	3	-2230	3761.06	2999			1744	643	SLU 83	0.21	No

Verifiche a pressoflessione delle travi in muratura in combinazioni sismiche

Sezione	γM	N	M	Mu	Comb.	c.s.	Verifica
ini.	2	347	2439.1	2659.77	SLV 11	1.09	Si
fin.	2	-752	6616.1	2659.77	SLV 11	0.4	No
ini.	2	-5448	-611.3	2659.77	SLV 14	4.35	Si
fin.	2	-4912	6360.76	2659.77	SLV 14	0.42	No
ini.	2	1075	301.32	2659.77	SLV 1	8.83	Si
fin.	2	1232	-3445.94	2659.77	SLV 1	0.77	No
ini.	2	2304	2712.89	2659.77	SLV 7	0.98	No
fin.	2	1091	3674.09	2659.77	SLV 7	0.72	No
ini.	2	2304	2712.89	2659.77	SLV 8	0.98	No
fin.	2	1091	3674.09	2659.77	SLV 8	0.72	No
ini.	2	-3827	649.16	2659.77	SLV 16	4.1	Si
fin.	2	-3985	8062.77	2659.77	SLV 16	0.33	No
ini.	2	1075	301.32	2659.77	SLV 2	8.83	Si
fin.	2	1232	-3445.94	2659.77	SLV 2	0.77	No
ini.	2	347	2439.1	2659.77	SLV 12	1.09	Si
fin.	2	-752	6616.1	2659.77	SLV 12	0.4	No
ini.	2	-3827	649.16	2659.77	SLV 15	4.1	Si
fin.	2	-3985	8062.77	2659.77	SLV 15	0.33	No
ini.	2	-5448	-611.3	2659.77	SLV 13	4.35	Si
fin.	2	-4912	6360.76	2659.77	SLV 13	0.42	No

Verifiche a taglio delle travi in muratura secondo §C8.7.1.3.1 in combinazioni sismiche

Sezione	γM	N	M	V	Vt	Vp	Vt fess. diag.	Vt,lim	Comb.	c.s.	Verifica
ini.	2	-3827	649.16	9564			2809	1016	SLV 15	0.11	No
fin.	2	-3985	8062.77	9139			2872	1032	SLV 15	0.11	No
ini.	2	1075	301.32	-4235			1278	81	SLV 1	0.02	No
fin.	2	1232	-3445.94	-5313			1278	0	SLV 1	0	No
ini.	2	-3827	649.16	9564			2809	1016	SLV 16	0.11	No
fin.	2	-3985	8062.77	9139			2872	1032	SLV 16	0.11	No
ini.	2	2696	1561.78	-4428			1278	0	SLV 3	0	No
fin.	2	2160	-1743.93	-5299			1278	0	SLV 3	0	No
ini.	2	1075	301.32	-4235			1278	81	SLV 2	0.02	No
fin.	2	1232	-3445.94	-5313			1278	0	SLV 2	0	No
ini.	2	2304	2712.89	244			1278	0	SLV 8	0	No
fin.	2	1091	3674.09	-229			1278	56	SLV 8	0.25	No
ini.	2	347	2439.1	4442			1278	398	SLV 12	0.09	No
fin.	2	-752	6616.1	4102			1579	623	SLV 12	0.15	No
ini.	2	2696	1561.78	-4428			1278	0	SLV 4	0	No
fin.	2	2160	-1743.93	-5299			1278	0	SLV 4	0	No
ini.	2	347	2439.1	4442			1278	398	SLV 11	0.09	No
fin.	2	-752	6616.1	4102			1579	623	SLV 11	0.15	No
ini.	2	2304	2712.89	244			1278	0	SLV 7	0	No
fin.	2	1091	3674.09	-229			1278	56	SLV 7	0.25	No

Tabella dei coefficienti di sicurezza minimi

Stato limite	Coeff.s.	Comb.	Verifica
PF_SLV	0.33	SLV 15	No
V_SLV	0	SLV 1	No
PF_SLU	0.471	SLU 81	No
V_SLU	0.15	SLU 81	No

Trave di accoppiamento 48

Verifiche condotte secondo D.M. 17-01-18 (N.T.C.)

Dati geometrici

X ini.	Y ini.	Z ini.inf.	Z ini.sup.	H ini.	X fin.	Y fin.	Z fin.inf.	Z fin.sup	H fin.	Luce	Spessore	R. Trazione
-17.796	6.536	0.67	1.57	0.9	-16.796	6.536	0.67	1.57	0.9	1	0.28	30000

Caratteristiche del materiale

(Circolare 7 21-01-19 C8.5.I) Muratura in mattoni pieni e malta di calce LC2_Corti

fb_	fhk	fvk0	fhmedio	τ0	fv0	μ	ϕ	fvk,lim	E	G	FC
120000			172500	9000	20000	0.577	0.767	6500	320000000	128000000	1.2

Verifiche a pressoflessione delle travi in muratura in combinazioni non sismiche

Sezione	γM	N	M	Mu	Comb.	c.s.	Verifica
ini.	3	3556	372.44	1150.68	SLU 74	3.09	Si
fin.	3	2084	522.86	1150.68	SLU 74	2.2	Si
ini.	3	3683	381.92	1150.68	SLU 84	3.01	Si
fin.	3	2171	539.65	1150.68	SLU 84	2.13	Si
ini.	3	3586	356.66	1150.68	SLU 79	3.23	Si
fin.	3	2079	537.81	1150.68	SLU 79	2.14	Si
ini.	3	3614	361.24	1150.68	SLU 77	3.19	Si
fin.	3	2095	541.12	1150.68	SLU 77	2.13	Si

Sezione	γM	N	M	Mu	Comb.	c.s.	Verifica
ini.	3	3613	362.71	1150.68	SLU 78	3.17	Si
fin.	3	2097	539.94	1150.68	SLU 78	2.13	Si
ini.	3	3624	393.12	1150.68	SLU 82	2.93	Si
fin.	3	2160	521.4	1150.68	SLU 82	2.21	Si
ini.	3	3625	391.65	1150.68	SLU 81	2.94	Si
fin.	3	2158	522.57	1150.68	SLU 81	2.2	Si
ini.	3	3684	380.45	1150.68	SLU 83	3.02	Si
fin.	3	2170	540.82	1150.68	SLU 83	2.13	Si
ini.	3	3555	373.91	1150.68	SLU 75	3.08	Si
fin.	3	2085	521.69	1150.68	SLU 75	2.21	Si
ini.	3	3585	358.14	1150.68	SLU 80	3.21	Si
fin.	3	2080	536.64	1150.68	SLU 80	2.14	Si

Verifiche a taglio delle travi in muratura secondo §C8.7.1.3.1 in combinazioni non sismiche

Sezione	γM	N	M	V	Vt	Vp	Vt fess. diag.	Vt,lim	Comb.	c.s.	Verifica
ini.	3	3238	332.31	271			873	0	SLU 59	0	No
fin.	3	1867	486.09	2788			873	0	SLU 59	0	No
ini.	3	3267	335.41	269			873	0	SLU 56	0	No
fin.	3	1881	490.57	2817			873	0	SLU 56	0	No
ini.	3	3277	367.3	212			873	0	SLU 61	0	No
fin.	3	1947	470.85	2723			873	0	SLU 61	0	No
ini.	3	3278	365.82	217			873	0	SLU 60	0	No
fin.	3	1945	472.02	2726			873	0	SLU 60	0	No
ini.	3	3208	346.61	233			873	0	SLU 53	0	No
fin.	3	1870	472.32	2727			873	0	SLU 53	0	No
ini.	3	3266	336.89	264			873	0	SLU 57	0	No
fin.	3	1883	489.4	2814			873	0	SLU 57	0	No
ini.	3	2213	255.93	142			873	0	SLU 1	0	No
fin.	3	1290	321.9	1878			873	0	SLU 1	0	No
ini.	3	3207	348.08	229			873	0	SLU 54	0	No
fin.	3	1872	471.14	2724			873	0	SLU 54	0	No
ini.	3	3179	344.49	232			873	0	SLU 55	0	No
fin.	3	1857	467.06	2696			873	0	SLU 55	0	No
ini.	3	3239	330.84	275			873	0	SLU 58	0	No
fin.	3	1865	487.27	2791			873	0	SLU 58	0	No

Verifiche a pressoflessione delle travi in muratura in combinazioni sismiche

Sezione	γM	N	M	Mu	Comb.	c.s.	Verifica
ini.	2	2811	-3235.14	1726.01	SLV 1	0.53	No
fin.	2	-4394	2417	1726.01	SLV 1	0.71	No
ini.	2	2022	3778.54	1726.01	SLV 16	0.46	No
fin.	2	7233	-1715.97	1726.01	SLV 16	1.01	Si
ini.	2	2022	3778.54	1726.01	SLV 15	0.46	No
fin.	2	7233	-1715.97	1726.01	SLV 15	1.01	Si
ini.	2	2811	-3235.14	1726.01	SLV 2	0.53	No
fin.	2	-4394	2417	1726.01	SLV 2	0.71	No
ini.	2	-6434	-4127.29	1726.01	SLV 5	0.42	No
fin.	2	-9348	816.64	1726.01	SLV 5	2.11	Si
ini.	2	11267	4670.69	1726.01	SLV 11	0.37	No
fin.	2	12187	-115.61	1726.01	SLV 11	14.93	Si
ini.	2	11267	4670.69	1726.01	SLV 12	0.37	No
fin.	2	12187	-115.61	1726.01	SLV 12	14.93	Si
ini.	2	13278	3228.62	1726.01	SLV 7	0.53	No
fin.	2	10484	1154.7	1726.01	SLV 7	1.49	Si
ini.	2	-6434	-4127.29	1726.01	SLV 6	0.42	No
fin.	2	-9348	816.64	1726.01	SLV 6	2.11	Si
ini.	2	13278	3228.62	1726.01	SLV 8	0.53	No
fin.	2	10484	1154.7	1726.01	SLV 8	1.49	Si

Verifiche a taglio delle travi in muratura secondo §C8.7.1.3.1 in combinazioni sismiche

Sezione	γM	N	M	V	Vt	Vp	Vt fess. diag.	Vt,lim	Comb.	c.s.	Verifica
ini.	2	8725	-1028.37	6675			1310	0	SLV 4	0	No
fin.	2	1556	2518.42	9930			1310	0	SLV 4	0	No
ini.	2	-3892	1571.77	-6361			2711	997	SLV 13	0.16	No
fin.	2	1283	-1817.39	-5861			1310	0	SLV 13	0	No
ini.	2	13278	3228.62	405			1310	0	SLV 7	0	No
fin.	2	10484	1154.7	5611			1310	0	SLV 7	0	No
ini.	2	8725	-1028.37	6675			1310	0	SLV 3	0	No
fin.	2	1556	2518.42	9930			1310	0	SLV 3	0	No
ini.	2	-3892	1571.77	-6361			2711	997	SLV 14	0.16	No
fin.	2	1283	-1817.39	-5861			1310	0	SLV 14	0	No
ini.	2	11267	4670.69	-3844			1310	0	SLV 12	0	No
fin.	2	12187	-115.61	1112			1310	0	SLV 12	0	No
ini.	2	11267	4670.69	-3844			1310	0	SLV 11	0	No
fin.	2	12187	-115.61	1112			1310	0	SLV 11	0	No
ini.	2	13278	3228.62	405			1310	0	SLV 8	0	No
fin.	2	10484	1154.7	5611			1310	0	SLV 8	0	No
ini.	2	2811	-3235.14	7801			1310	0	SLV 1	0	No
fin.	2	-4394	2417	9134			2892	1044	SLV 1	0.11	No
ini.	2	2811	-3235.14	7801			1310	0	SLV 2	0	No
fin.	2	-4394	2417	9134			2892	1044	SLV 2	0.11	No

Tabella dei coefficienti di sicurezza minimi

Stato limite	Coeff.s.	Comb.	Verifica
PF_SLV	0.37	SLV 11	No
V_SLV	0	SLV 1	No
PF_SLU	2.126	SLU 77	Si
V_SLU	0	SLU 1	No

Trave di accoppiamento 49

Verifiche condotte secondo D.M. 17-01-18 (N.T.C.)

Dati geometrici

X ini.	Y ini.	Z ini.inf.	Z ini.sup.	H ini.	X fin.	Y fin.	Z fin.inf.	Z fin.sup	H fin.	Luce	Spessore	R. Trazione
-17.796	6.536	3.47	4.35	0.88	-16.796	6.536	3.47	4.35	0.88	1	0.28	30000

Caratteristiche del materiale

(Circolare 7 21-01-19 C8.5.I) Muratura in mattoni pieni e malta di calce LC2_Corti

fb_	fhk	fvk0	fhmedio	τ0	fv0	μ	ϕ	fvk,lim	E	G	FC
120000			172500	9000	20000	0.577	0.767	6500	320000000	128000000	1.2

Verifiche a pressoflessione delle travi in muratura in combinazioni non sismiche

Sezione	γM	N	M	Mu	Comb.	c.s.	Verifica
ini.	3	-1810	-466.92	1100.1	SLU 78	2.36	Si
fin.	3	-1046	-164.67	1100.1	SLU 78	6.68	Si
ini.	3	-1827	-464.65	1100.1	SLU 84	2.37	Si
fin.	3	-1127	-173.95	1100.1	SLU 84	6.32	Si
ini.	3	-1802	-465.12	1100.1	SLU 79	2.37	Si
fin.	3	-1032	-161.18	1100.1	SLU 79	6.83	Si
ini.	3	-1770	-448.17	1100.1	SLU 75	2.45	Si
fin.	3	-1087	-170.56	1100.1	SLU 75	6.45	Si
ini.	3	-1787	-445.9	1100.1	SLU 82	2.47	Si
fin.	3	-1168	-179.85	1100.1	SLU 82	6.12	Si
ini.	3	-1832	-465.94	1100.1	SLU 83	2.36	Si
fin.	3	-1126	-173.11	1100.1	SLU 83	6.35	Si
ini.	3	-1815	-468.21	1100.1	SLU 77	2.35	Si
fin.	3	-1045	-163.82	1100.1	SLU 77	6.72	Si
ini.	3	-1797	-463.83	1100.1	SLU 80	2.37	Si
fin.	3	-1034	-162.03	1100.1	SLU 80	6.79	Si
ini.	3	-1775	-449.46	1100.1	SLU 74	2.45	Si
fin.	3	-1086	-169.72	1100.1	SLU 74	6.48	Si
ini.	3	-1792	-447.19	1100.1	SLU 81	2.46	Si
fin.	3	-1166	-179.01	1100.1	SLU 81	6.15	Si

Verifiche a taglio delle travi in muratura secondo §C8.7.1.3.1 in combinazioni non sismiche

Sezione	γM	N	M	V	Vt	Vp	Vt fess. diag.	Vt,lim	Comb.	c.s.	Verifica
ini.	3	-1815	-468.21	3615			1474	563	SLU 77	0.16	No
fin.	3	-1045	-163.82	-4186			1203	474	SLU 77	0.11	No
ini.	3	-1787	-445.9	3555			1464	560	SLU 82	0.16	No
fin.	3	-1168	-179.85	-4347			1246	489	SLU 82	0.11	No
ini.	3	-1810	-466.92	3610			1472	563	SLU 78	0.16	No
fin.	3	-1046	-164.67	-4192			1203	474	SLU 78	0.11	No
ini.	3	-1802	-465.12	3590			1469	562	SLU 79	0.16	No
fin.	3	-1032	-161.18	-4147			1198	472	SLU 79	0.11	No
ini.	3	-1832	-465.94	3660			1480	565	SLU 83	0.15	No
fin.	3	-1126	-173.11	-4356			1231	484	SLU 83	0.11	No
ini.	3	-1792	-447.19	3560			1466	561	SLU 81	0.16	No
fin.	3	-1166	-179.01	-4342			1246	489	SLU 81	0.11	No
ini.	3	-1775	-449.46	3514			1460	559	SLU 74	0.16	No
fin.	3	-1086	-169.72	-4171			1217	479	SLU 74	0.11	No
ini.	3	-1770	-448.17	3509			1458	558	SLU 75	0.16	No
fin.	3	-1087	-170.56	-4177			1218	479	SLU 75	0.11	No
ini.	3	-1797	-463.83	3585			1467	561	SLU 80	0.16	No
fin.	3	-1034	-162.03	-4152			1199	472	SLU 80	0.11	No
ini.	3	-1827	-464.65	3655			1478	564	SLU 84	0.15	No
fin.	3	-1127	-173.95	-4362			1232	484	SLU 84	0.11	No

Verifiche a pressoflessione delle travi in muratura in combinazioni sismiche

Sezione	γM	N	M	Mu	Comb.	c.s.	Verifica
ini.	2	-4785	-2034.71	1650.16	SLV 3	0.81	No
fin.	2	4279	1046.91	1650.16	SLV 3	1.58	Si
ini.	2	2372	1441.53	1650.16	SLV 13	1.14	Si
fin.	2	-5827	-1293.9	1650.16	SLV 13	1.28	Si
ini.	2	-4071	-1986.9	1650.16	SLV 1	0.83	No
fin.	2	5019	1127.53	1650.16	SLV 1	1.46	Si
ini.	2	1658	1393.72	1650.16	SLV 16	1.18	Si
fin.	2	-6567	-1374.51	1650.16	SLV 16	1.2	Si
ini.	2	2372	1441.53	1650.16	SLV 14	1.14	Si
fin.	2	-5827	-1293.9	1650.16	SLV 14	1.28	Si
ini.	2	1658	1393.72	1650.16	SLV 15	1.18	Si
fin.	2	-6567	-1374.51	1650.16	SLV 15	1.2	Si
ini.	2	-4785	-2034.71	1650.16	SLV 4	0.81	No
fin.	2	4279	1046.91	1650.16	SLV 4	1.58	Si
ini.	2	-4071	-1986.9	1650.16	SLV 2	0.83	No
fin.	2	5019	1127.53	1650.16	SLV 2	1.46	Si
ini.	2	-3362	-890.54	1650.16	SLV 8	1.85	Si
fin.	2	-380	105.36	1650.16	SLV 8	15.66	Si
ini.	2	-3362	-890.54	1650.16	SLV 7	1.85	Si
fin.	2	-380	105.36	1650.16	SLV 7	15.66	Si

Verifiche a taglio delle travi in muratura secondo §C8.7.1.3.1 in combinazioni sismiche

Sezione	γM	N	M	V	Vt	Vp	Vt fess. diag.	Vt,lim	Comb.	c.s.	Verifica
ini.	2	2372	1441.53	-4698			1253	0	SLV 14	0	No
fin.	2	-5827	-1293.9	-9380			3304	1128	SLV 14	0.12	No
ini.	2	-4785	-2034.71	9356			2937	1042	SLV 3	0.11	No
fin.	2	4279	1046.91	3759			1253	0	SLV 3	0	No
ini.	2	1658	1393.72	-4098			1253	0	SLV 16	0	No
fin.	2	-6567	-1374.51	-10145			3564	1186	SLV 16	0.12	No

Sezione	γM	N	M	V	Vt	Vp	Vt fess. diag.	Vt,lim	Comb.	c.s.	Verifica
ini.	2	1658	1393.72	-4098			1253	0	SLV 15	0	No
fin.	2	-6567	-1374.51	-10145			3564	1186	SLV 15	0.12	No
ini.	2	-984	-731.17	3348			1599	632	SLV 6	0.19	No
fin.	2	2086	374.08	550			1253	0	SLV 6	0	No
ini.	2	-4071	-1986.9	8757			2686	978	SLV 1	0.11	No
fin.	2	5019	1127.53	4524			1253	0	SLV 1	0	No
ini.	2	2372	1441.53	-4698			1253	0	SLV 13	0	No
fin.	2	-5827	-1293.9	-9380			3304	1128	SLV 13	0.12	No
ini.	2	-984	-731.17	3348			1599	632	SLV 5	0.19	No
fin.	2	2086	374.08	550			1253	0	SLV 5	0	No
ini.	2	-4071	-1986.9	8757			2686	978	SLV 2	0.11	No
fin.	2	5019	1127.53	4524			1253	0	SLV 2	0	No
ini.	2	-4785	-2034.71	9356			2937	1042	SLV 4	0.11	No
fin.	2	4279	1046.91	3759			1253	0	SLV 4	0	No

Tabella dei coefficienti di sicurezza minimi

Stato limite	Coeff.s.	Comb.	Verifica
PF_SLV	0.811	SLV 3	No
V_SLV	0	SLV 1	No
PF_SLU	2.35	SLU 77	Si
V_SLU	0.111	SLU 84	No

Trave di accoppiamento 50

Verifiche condotte secondo D.M. 17-01-18 (N.T.C.)

Dati geometrici

X ini.	Y ini.	Z ini.inf.	Z ini.sup.	H ini.	X fin.	Y fin.	Z fin.inf.	Z fin.sup	H fin.	Luce	Spessore	R. Trazione
-12.901	6.536	0.67	1.57	0.9	-11.901	6.536	0.67	1.57	0.9	1	0.28	30000

Caratteristiche del materiale

(Circolare 7 21-01-19 C8.5.I) Muratura in mattoni pieni e malta di calce LC2_Corti

fb_	fhk	fvk0	fhmedio	τ0	fv0	μ	ϕ	fvk,lim	E	G	FC
120000			172500	9000	20000	0.577	0.767	6500	320000000	128000000	1.2

Verifiche a pressoflessione delle travi in muratura in combinazioni non sismiche

Sezione	γM	N	M	Mu	Comb.	c.s.	Verifica
ini.	3	1515	462.7	1150.68	SLU 75	2.49	Si
fin.	3	1464	523.06	1150.68	SLU 75	2.2	Si
ini.	3	1516	471.46	1150.68	SLU 81	2.44	Si
fin.	3	1465	532	1150.68	SLU 81	2.16	Si
ini.	3	1558	476.27	1150.68	SLU 83	2.42	Si
fin.	3	1504	540.81	1150.68	SLU 83	2.13	Si
ini.	3	1559	466.2	1150.68	SLU 77	2.47	Si
fin.	3	1502	532.77	1150.68	SLU 77	2.16	Si
ini.	3	1514	472.76	1150.68	SLU 82	2.43	Si
fin.	3	1465	531.1	1150.68	SLU 82	2.17	Si
ini.	3	1548	462.36	1150.68	SLU 79	2.49	Si
fin.	3	1492	528.67	1150.68	SLU 79	2.18	Si
ini.	3	1516	461.39	1150.68	SLU 74	2.49	Si
fin.	3	1464	523.96	1150.68	SLU 74	2.2	Si
ini.	3	1547	463.67	1150.68	SLU 80	2.48	Si
fin.	3	1492	527.76	1150.68	SLU 80	2.18	Si
ini.	3	1557	477.57	1150.68	SLU 84	2.41	Si
fin.	3	1504	539.91	1150.68	SLU 84	2.13	Si
ini.	3	1558	467.51	1150.68	SLU 78	2.46	Si
fin.	3	1502	531.87	1150.68	SLU 78	2.16	Si

Verifiche a taglio delle travi in muratura secondo §C8.7.1.3.1 in combinazioni non sismiche

Sezione	γM	N	M	V	Vt	Vp	Vt fess. diag.	Vt,lim	Comb.	c.s.	Verifica
ini.	3	1392	430.36	-462			873	0	SLU 61	0	No
fin.	3	1348	482.75	551			873	0	SLU 61	0	No
ini.	3	1394	418.99	-452			873	0	SLU 53	0	No
fin.	3	1347	475.61	553			873	0	SLU 53	0	No
ini.	3	1382	417.33	-450			873	0	SLU 55	0	No
fin.	3	1336	470	540			873	0	SLU 55	0	No
ini.	3	1393	429.06	-459			873	0	SLU 60	0	No
fin.	3	1348	483.65	553			873	0	SLU 60	0	No
ini.	3	1393	420.3	-455			873	0	SLU 54	0	No
fin.	3	1347	474.71	550			873	0	SLU 54	0	No
ini.	3	969	293.24	-306			873	0	SLU 1	0	No
fin.	3	937	331.05	368			873	0	SLU 1	0	No
ini.	3	1425	421.27	-458			873	0	SLU 59	0	No
fin.	3	1375	479.41	563			873	0	SLU 59	0	No
ini.	3	1426	419.96	-454			873	0	SLU 58	0	No
fin.	3	1375	480.32	565			873	0	SLU 58	0	No
ini.	3	1437	423.8	-462			873	0	SLU 56	0	No
fin.	3	1385	484.42	574			873	0	SLU 56	0	No
ini.	3	1436	425.11	-466			873	0	SLU 57	0	No
fin.	3	1386	483.52	571			873	0	SLU 57	0	No

Verifiche a pressoflessione delle travi in muratura in combinazioni sismiche

Sezione	γM	N	M	Mu	Comb.	c.s.	Verifica
ini.	2	6720	2321.35	1726.01	SLV 8	0.74	No
fin.	2	4922	4108.9	1726.01	SLV 8	0.42	No
ini.	2	-4643	-1685.69	1726.01	SLV 9	1.02	Si
fin.	2	-2912	-3391.23	1726.01	SLV 9	0.51	No

Sezione	γM	N	M	Mu	Comb.	c.s.	Verifica
ini.	2	4908	-1265.2	1726.01	SLV 4	1.36	Si
fin.	2	-410	3756.3	1726.01	SLV 4	0.46	No
ini.	2	6720	2321.35	1726.01	SLV 7	0.74	No
fin.	2	4922	4108.9	1726.01	SLV 7	0.42	No
ini.	2	150	3534.98	1726.01	SLV 16	0.49	No
fin.	2	5281	-1238.09	1726.01	SLV 16	1.39	Si
ini.	2	-4643	-1685.69	1726.01	SLV 10	1.02	Si
fin.	2	-2912	-3391.23	1726.01	SLV 10	0.51	No
ini.	2	4908	-1265.2	1726.01	SLV 3	1.36	Si
fin.	2	-410	3756.3	1726.01	SLV 3	0.46	No
ini.	2	5293	3761.4	1726.01	SLV 11	0.46	No
fin.	2	6629	2610.58	1726.01	SLV 11	0.66	No
ini.	2	5293	3761.4	1726.01	SLV 12	0.46	No
fin.	2	6629	2610.58	1726.01	SLV 12	0.66	No
ini.	2	150	3534.98	1726.01	SLV 15	0.49	No
fin.	2	5281	-1238.09	1726.01	SLV 15	1.39	Si

Verifiche a taglio delle travi in muratura secondo §C8.7.1.3.1 in combinazioni sismiche

Sezione	γM	N	M	V	Vt	Vp	Vt fess. diag.	Vt,lim	Comb.	c.s.	Verifica
ini.	2	4908	-1265.2	6590			1310	0	SLV 4	0	No
fin.	2	-410	3756.3	7671			1458	568	SLV 4	0.07	No
ini.	2	6720	2321.35	973			1310	0	SLV 7	0	No
fin.	2	4922	4108.9	3330			1310	0	SLV 7	0	No
ini.	2	-2830	1900.85	-7269			2329	888	SLV 13	0.12	No
fin.	2	2419	-3038.63	-6851			1310	0	SLV 13	0	No
ini.	2	1927	-2899.33	7096			1310	0	SLV 2	0	No
fin.	2	-3272	1955.76	7182			2488	935	SLV 2	0.13	No
ini.	2	6720	2321.35	973			1310	0	SLV 8	0	No
fin.	2	4922	4108.9	3330			1310	0	SLV 8	0	No
ini.	2	-2830	1900.85	-7269			2329	888	SLV 14	0.12	No
fin.	2	2419	-3038.63	-6851			1310	0	SLV 14	0	No
ini.	2	4908	-1265.2	6590			1310	0	SLV 3	0	No
fin.	2	-410	3756.3	7671			1458	568	SLV 3	0.07	No
ini.	2	5293	3761.4	-3337			1310	0	SLV 11	0	No
fin.	2	6629	2610.58	-880			1310	0	SLV 11	0	No
ini.	2	5293	3761.4	-3337			1310	0	SLV 12	0	No
fin.	2	6629	2610.58	-880			1310	0	SLV 12	0	No
ini.	2	1927	-2899.33	7096			1310	0	SLV 1	0	No
fin.	2	-3272	1955.76	7182			2488	935	SLV 1	0.13	No

Tabella dei coefficienti di sicurezza minimi

Stato limite	Coeff.s.	Comb.	Verifica
PF_SLV	0.42	SLV 7	No
V_SLV	0	SLV 1	No
PF_SLU	2.128	SLU 83	Si
V_SLU	0	SLU 1	No

Trave di accoppiamento 51

Verifiche condotte secondo D.M. 17-01-18 (N.T.C.)

Dati geometrici

X ini.	Y ini.	Z ini.inf.	Z ini.sup.	H ini.	X fin.	Y fin.	Z fin.inf.	Z fin.sup	H fin.	Luce	Spessore	R. Trazione
-12.901	6.536	3.47	4.35	0.88	-11.901	6.536	3.47	4.35	0.88	1	0.28	30000

Caratteristiche del materiale

(Circolare 7 21-01-19 C8.5.I) Muratura in mattoni pieni e malta di calce LC2_Corti

fb_	fhk	fvk0	fhmedio	τ0	fv0	μ	ϕ	fvk,lim	E	G	FC
120000			172500	9000	20000	0.577	0.767	6500	320000000	128000000	1.2

Verifiche a pressoflessione delle travi in muratura in combinazioni non sismiche

Sezione	γM	N	M	Mu	Comb.	c.s.	Verifica
ini.	3	-1961	-390.81	1100.1	SLU 82	2.81	Si
fin.	3	-1912	-407.1	1100.1	SLU 82	2.7	Si
ini.	3	-1892	-383.48	1100.1	SLU 80	2.87	Si
fin.	3	-1850	-400.42	1100.1	SLU 80	2.75	Si
ini.	3	-1975	-397.16	1100.1	SLU 83	2.77	Si
fin.	3	-1924	-411.84	1100.1	SLU 83	2.67	Si
ini.	3	-1897	-381.43	1100.1	SLU 75	2.88	Si
fin.	3	-1852	-397.63	1100.1	SLU 75	2.77	Si
ini.	3	-1910	-387.79	1100.1	SLU 77	2.84	Si
fin.	3	-1863	-402.37	1100.1	SLU 77	2.73	Si
ini.	3	-1894	-384.44	1100.1	SLU 79	2.86	Si
fin.	3	-1849	-399.1	1100.1	SLU 79	2.76	Si
ini.	3	-1908	-386.83	1100.1	SLU 78	2.84	Si
fin.	3	-1865	-403.69	1100.1	SLU 78	2.73	Si
ini.	3	-1964	-391.77	1100.1	SLU 81	2.81	Si
fin.	3	-1911	-405.78	1100.1	SLU 81	2.71	Si
ini.	3	-1972	-396.2	1100.1	SLU 84	2.78	Si
fin.	3	-1925	-413.16	1100.1	SLU 84	2.66	Si
ini.	3	-1899	-382.39	1100.1	SLU 74	2.88	Si
fin.	3	-1850	-396.32	1100.1	SLU 74	2.78	Si

Verifiche a taglio delle travi in muratura secondo §C8.7.1.3.1 in combinazioni non sismiche

Sezione	γM	N	M	V	Vt	Vp	Vt fess. diag.	Vt,lim	Comb.	c.s.	Verifica
ini.	3	-1910	-387.79	2767			1507	573	SLU 77	0.21	No
fin.	3	-1863	-402.37	-2772			1491	568	SLU 77	0.2	No

Sezione	γM	N	M	V	Vt	Vp	Vt fess. diag.	Vt,lim	Comb.	c.s.	Verifica
ini.	3	-1975	-397.16	2824			1530	580	SLU 83	0.21	No
fin.	3	-1924	-411.84	-2827			1512	575	SLU 83	0.2	No
ini.	3	-1899	-382.39	2723			1504	572	SLU 74	0.21	No
fin.	3	-1850	-396.32	-2724			1486	567	SLU 74	0.21	No
ini.	3	-1894	-384.44	2744			1502	571	SLU 79	0.21	No
fin.	3	-1849	-399.1	-2750			1486	567	SLU 79	0.21	No
ini.	3	-1892	-383.48	2741			1501	571	SLU 80	0.21	No
fin.	3	-1850	-400.42	-2755			1486	567	SLU 80	0.21	No
ini.	3	-1908	-386.83	2764			1507	573	SLU 78	0.21	No
fin.	3	-1865	-403.69	-2777			1491	568	SLU 78	0.2	No
ini.	3	-1964	-391.77	2779			1526	579	SLU 81	0.21	No
fin.	3	-1911	-405.78	-2780			1508	573	SLU 81	0.21	No
ini.	3	-1972	-396.2	2820			1529	580	SLU 84	0.21	No
fin.	3	-1925	-413.16	-2832			1513	575	SLU 84	0.2	No
ini.	3	-1961	-390.81	2776			1525	578	SLU 82	0.21	No
fin.	3	-1912	-407.1	-2785			1508	573	SLU 82	0.21	No
ini.	3	-1897	-381.43	2720			1503	572	SLU 75	0.21	No
fin.	3	-1852	-397.63	-2729			1487	567	SLU 75	0.21	No

Verifiche a pressoflessione delle travi in muratura in combinazioni sismiche

Sezione	γM	N	M	Mu	Comb.	c.s.	Verifica
ini.	2	-4172	-1954.35	1650.16	SLV 1	0.84	No
fin.	2	1996	1483.92	1650.16	SLV 1	1.11	Si
ini.	2	-4172	-1954.35	1650.16	SLV 2	0.84	No
fin.	2	1996	1483.92	1650.16	SLV 2	1.11	Si
ini.	2	-4874	-2042.11	1650.16	SLV 3	0.81	No
fin.	2	1400	1413.61	1650.16	SLV 3	1.17	Si
ini.	2	-3433	-926.48	1650.16	SLV 8	1.78	Si
fin.	2	-1365	130.35	1650.16	SLV 8	12.66	Si
ini.	2	2287	1525.71	1650.16	SLV 13	1.08	Si
fin.	2	-3920	-1948.16	1650.16	SLV 13	0.85	No
ini.	2	-3433	-926.48	1650.16	SLV 7	1.78	Si
fin.	2	-1365	130.35	1650.16	SLV 7	12.66	Si
ini.	2	2287	1525.71	1650.16	SLV 14	1.08	Si
fin.	2	-3920	-1948.16	1650.16	SLV 14	0.85	No
ini.	2	1585	1437.95	1650.16	SLV 15	1.15	Si
fin.	2	-4516	-2018.47	1650.16	SLV 15	0.82	No
ini.	2	1585	1437.95	1650.16	SLV 16	1.15	Si
fin.	2	-4516	-2018.47	1650.16	SLV 16	0.82	No
ini.	2	-4874	-2042.11	1650.16	SLV 4	0.81	No
fin.	2	1400	1413.61	1650.16	SLV 4	1.17	Si

Verifiche a taglio delle travi in muratura secondo §C8.7.1.3.1 in combinazioni sismiche

Sezione	γM	N	M	V	Vt	Vp	Vt fess. diag.	Vt,lim	Comb.	c.s.	Verifica
ini.	2	-3433	-926.48	4614			2461	917	SLV 8	0.2	No
fin.	2	-1365	130.35	-665			1733	684	SLV 8	1.03	Si
ini.	2	1585	1437.95	-4144			1253	0	SLV 16	0	No
fin.	2	-4516	-2018.47	-8165			2842	1018	SLV 16	0.12	No
ini.	2	-4874	-2042.11	8368			2968	1049	SLV 4	0.13	No
fin.	2	1400	1413.61	4087			1253	0	SLV 4	0	No
ini.	2	2287	1525.71	-4680			1253	0	SLV 13	0	No
fin.	2	-3920	-1948.16	-7768			2632	964	SLV 13	0.12	No
ini.	2	1585	1437.95	-4144			1253	0	SLV 15	0	No
fin.	2	-4516	-2018.47	-8165			2842	1018	SLV 15	0.12	No
ini.	2	2287	1525.71	-4680			1253	0	SLV 14	0	No
fin.	2	-3920	-1948.16	-7768			2632	964	SLV 14	0.12	No
ini.	2	-4874	-2042.11	8368			2968	1049	SLV 3	0.13	No
fin.	2	1400	1413.61	4087			1253	0	SLV 3	0	No
ini.	2	-4172	-1954.35	7832			2721	987	SLV 2	0.13	No
fin.	2	1996	1483.92	4484			1253	0	SLV 2	0	No
ini.	2	-3433	-926.48	4614			2461	917	SLV 7	0.2	No
fin.	2	-1365	130.35	-665			1733	684	SLV 7	1.03	Si
ini.	2	-4172	-1954.35	7832			2721	987	SLV 1	0.13	No
fin.	2	1996	1483.92	4484			1253	0	SLV 1	0	No

Tabella dei coefficienti di sicurezza minimi

Stato limite	Coeff.s.	Comb.	Verifica
PF_SLV	0.808	SLV 3	No
V_SLV	0	SLV 1	No
PF_SLU	2.663	SLU 84	Si
V_SLU	0.203	SLU 84	No

Trave di accoppiamento 52

Verifiche condotte secondo D.M. 17-01-18 (N.T.C.)

Dati geometrici

X ini.	Y ini.	Z ini.inf.	Z ini.sup.	H ini.	X fin.	Y fin.	Z fin.inf.	Z fin.sup	H fin.	Luce	Spessore	R. Trazione
-8.007	6.536	0.67	1.57	0.9	-7.007	6.536	0.67	1.57	0.9	1	0.28	30000

Caratteristiche del materiale

(Circolare 7 21-01-19 C8.5.I) Muratura in mattoni pieni e malta di calce LC2_Corti

fb_	fhk	fvk0	fhmedio	τ0	fv0	μ	ϕ	fvk,lim	E	G	FC
120000			172500	9000	20000	0.577	0.767	6500	320000000	128000000	1.2

Verifiche a pressoflessione delle travi in muratura in combinazioni non sismiche

Sezione	γM	N	M	Mu	Comb.	c.s.	Verifica
ini.	3	1777	475.56	1150.68	SLU 78	2.42	Si
fin.	3	3219	385.71	1150.68	SLU 78	2.98	Si
ini.	3	1754	466.74	1150.68	SLU 74	2.47	Si
fin.	3	3167	381.07	1150.68	SLU 74	3.02	Si
ini.	3	1836	481.77	1150.68	SLU 84	2.39	Si
fin.	3	3287	392.25	1150.68	SLU 84	2.93	Si
ini.	3	1811	472.86	1150.68	SLU 82	2.43	Si
fin.	3	3232	388.91	1150.68	SLU 82	2.96	Si
ini.	3	1769	471.25	1150.68	SLU 79	2.44	Si
fin.	3	3197	382.46	1150.68	SLU 79	3.01	Si
ini.	3	1813	472.95	1150.68	SLU 81	2.43	Si
fin.	3	3234	387.61	1150.68	SLU 81	2.97	Si
ini.	3	1767	471.16	1150.68	SLU 80	2.44	Si
fin.	3	3195	383.76	1150.68	SLU 80	3	Si
ini.	3	1752	466.65	1150.68	SLU 75	2.47	Si
fin.	3	3165	382.38	1150.68	SLU 75	3.01	Si
ini.	3	1779	475.65	1150.68	SLU 77	2.42	Si
fin.	3	3221	384.41	1150.68	SLU 77	2.99	Si
ini.	3	1837	481.86	1150.68	SLU 83	2.39	Si
fin.	3	3289	390.94	1150.68	SLU 83	2.94	Si

Verifiche a taglio delle travi in muratura secondo §C8.7.1.3.1 in combinazioni non sismiche

Sezione	γM	N	M	V	Vt	Vp	Vt fess. diag.	Vt,lim	Comb.	c.s.	Verifica
ini.	3	1585	431.03	-2706			873	0	SLU 56	0	No
fin.	3	2900	356.7	-202			873	0	SLU 56	0	No
ini.	3	1584	430.94	-2707			873	0	SLU 57	0	No
fin.	3	2898	358	-199			873	0	SLU 57	0	No
ini.	3	1619	428.32	-2662			873	0	SLU 60	0	No
fin.	3	2913	359.9	-215			873	0	SLU 60	0	No
ini.	3	1058	291.18	-1831			873	0	SLU 1	0	No
fin.	3	1951	253.85	-137			873	0	SLU 1	0	No
ini.	3	1548	417.56	-2615			873	0	SLU 55	0	No
fin.	3	2818	353.59	-197			873	0	SLU 55	0	No
ini.	3	1618	428.24	-2663			873	0	SLU 61	0	No
fin.	3	2911	361.2	-211			873	0	SLU 61	0	No
ini.	3	1559	422.03	-2644			873	0	SLU 54	0	No
fin.	3	2843	354.67	-199			873	0	SLU 54	0	No
ini.	3	1575	426.62	-2676			873	0	SLU 58	0	No
fin.	3	2876	354.75	-203			873	0	SLU 58	0	No
ini.	3	1574	426.54	-2677			873	0	SLU 59	0	No
fin.	3	2874	356.05	-199			873	0	SLU 59	0	No
ini.	3	1561	422.12	-2643			873	0	SLU 53	0	No
fin.	3	2845	353.37	-202			873	0	SLU 53	0	No

Verifiche a pressoflessione delle travi in muratura in combinazioni sismiche

Sezione	γM	N	M	Mu	Comb.	c.s.	Verifica
ini.	2	9593	849.81	1726.01	SLV 11	2.03	Si
fin.	2	13558	3185.54	1726.01	SLV 11	0.54	No
ini.	2	10388	-214.95	1726.01	SLV 8	8.03	Si
fin.	2	10594	4556.86	1726.01	SLV 8	0.38	No
ini.	2	-2795	2091.41	1726.01	SLV 14	0.83	No
fin.	2	4100	-3096.36	1726.01	SLV 14	0.56	No
ini.	2	5145	-1457.52	1726.01	SLV 3	1.18	Si
fin.	2	180	3635.65	1726.01	SLV 3	0.47	No
ini.	2	-8038	848.85	1726.01	SLV 10	2.03	Si
fin.	2	-6314	-4017.57	1726.01	SLV 10	0.43	No
ini.	2	-2795	2091.41	1726.01	SLV 13	0.83	No
fin.	2	4100	-3096.36	1726.01	SLV 13	0.56	No
ini.	2	9593	849.81	1726.01	SLV 12	2.03	Si
fin.	2	13558	3185.54	1726.01	SLV 12	0.54	No
ini.	2	5145	-1457.52	1726.01	SLV 4	1.18	Si
fin.	2	180	3635.65	1726.01	SLV 4	0.47	No
ini.	2	10388	-214.95	1726.01	SLV 7	8.03	Si
fin.	2	10594	4556.86	1726.01	SLV 7	0.38	No
ini.	2	-8038	848.85	1726.01	SLV 9	2.03	Si
fin.	2	-6314	-4017.57	1726.01	SLV 9	0.43	No

Verifiche a taglio delle travi in muratura secondo §C8.7.1.3.1 in combinazioni sismiche

Sezione	γM	N	M	V	Vt	Vp	Vt fess. diag.	Vt,lim	Comb.	c.s.	Verifica
ini.	2	5145	-1457.52	4686			1310	0	SLV 4	0	No
fin.	2	180	3635.65	7099			1310	457	SLV 4	0.06	No
ini.	2	2494	2091.7	-9339			1310	0	SLV 15	0	No
fin.	2	10062	-935.43	-6066			1310	0	SLV 15	0	No
ini.	2	9593	849.81	-5230			1310	0	SLV 12	0	No
fin.	2	13558	3185.54	100			1310	0	SLV 12	0	No
ini.	2	-2795	2091.41	-8653			2316	884	SLV 14	0.1	No
fin.	2	4100	-3096.36	-7401			1310	0	SLV 14	0	No
ini.	2	5145	-1457.52	4686			1310	0	SLV 3	0	No
fin.	2	180	3635.65	7099			1310	457	SLV 3	0.06	No
ini.	2	10388	-214.95	-1023			1310	0	SLV 7	0	No
fin.	2	10594	4556.86	4050			1310	0	SLV 7	0	No
ini.	2	10388	-214.95	-1023			1310	0	SLV 8	0	No
fin.	2	10594	4556.86	4050			1310	0	SLV 8	0	No
ini.	2	2494	2091.7	-9339			1310	0	SLV 16	0	No
fin.	2	10062	-935.43	-6066			1310	0	SLV 16	0	No
ini.	2	9593	849.81	-5230			1310	0	SLV 11	0	No
fin.	2	13558	3185.54	100			1310	0	SLV 11	0	No
ini.	2	-2795	2091.41	-8653			2316	884	SLV 13	0.1	No
fin.	2	4100	-3096.36	-7401			1310	0	SLV 13	0	No

Tabella dei coefficienti di sicurezza minimi

Stato limite	Coeff.s.	Comb.	Verifica
PF_SLV	0.379	SLV 7	No
V_SLV	0	SLV 3	No
PF_SLU	2.388	SLU 83	Si
V_SLU	0	SLU 1	No

Trave di accoppiamento 53

Verifiche condotte secondo D.M. 17-01-18 (N.T.C.)

Dati geometrici

X ini.	Y ini.	Z ini.inf.	Z ini.sup.	H ini.	X fin.	Y fin.	Z fin.inf.	Z fin.sup	H fin.	Luce	Spessore	R. Trazione
-8.007	6.536	3.47	4.35	0.88	-7.007	6.536	3.47	4.35	0.88	1	0.28	30000

Caratteristiche del materiale

(Circolare 7 21-01-19 C8.5.I) Muratura in mattoni pieni e malta di calce LC2_Corti

fb_	fhk	fvk0	fhmedio	τ0	fv0	μ	ϕ	fvk,lim	E	G	FC
120000			172500	9000	20000	0.577	0.767	6500	320000000	128000000	1.2

Verifiche a pressoflessione delle travi in muratura in combinazioni non sismiche

Sezione	γM	N	M	Mu	Comb.	c.s.	Verifica
ini.	3	-1212	-197.01	1100.1	SLU 74	5.58	Si
fin.	3	-1754	-410.96	1100.1	SLU 74	2.68	Si
ini.	3	-1253	-200.38	1100.1	SLU 82	5.49	Si
fin.	3	-1776	-415.58	1100.1	SLU 82	2.65	Si
ini.	3	-1221	-200.03	1100.1	SLU 78	5.5	Si
fin.	3	-1784	-420.2	1100.1	SLU 78	2.62	Si
ini.	3	-1215	-197.98	1100.1	SLU 79	5.56	Si
fin.	3	-1771	-415.95	1100.1	SLU 79	2.64	Si
ini.	3	-1261	-202.74	1100.1	SLU 84	5.43	Si
fin.	3	-1808	-424.99	1100.1	SLU 84	2.59	Si
ini.	3	-1220	-199.38	1100.1	SLU 77	5.52	Si
fin.	3	-1786	-420.37	1100.1	SLU 77	2.62	Si
ini.	3	-1213	-197.67	1100.1	SLU 75	5.57	Si
fin.	3	-1752	-410.79	1100.1	SLU 75	2.68	Si
ini.	3	-1216	-198.63	1100.1	SLU 80	5.54	Si
fin.	3	-1769	-415.78	1100.1	SLU 80	2.65	Si
ini.	3	-1252	-199.73	1100.1	SLU 81	5.51	Si
fin.	3	-1778	-415.75	1100.1	SLU 81	2.65	Si
ini.	3	-1260	-202.09	1100.1	SLU 83	5.44	Si
fin.	3	-1810	-425.15	1100.1	SLU 83	2.59	Si

Verifiche a taglio delle travi in muratura secondo §C8.7.1.3.1 in combinazioni non sismiche

Sezione	γM	N	M	V	Vt	Vp	Vt fess. diag.	Vt,lim	Comb.	c.s.	Verifica
ini.	3	-1213	-197.67	4155			1262	495	SLU 75	0.12	No
fin.	3	-1752	-410.79	-3304			1452	556	SLU 75	0.17	No
ini.	3	-1216	-198.63	4189			1263	495	SLU 80	0.12	No
fin.	3	-1769	-415.78	-3340			1458	558	SLU 80	0.17	No
ini.	3	-1260	-202.09	4339			1279	500	SLU 83	0.12	No
fin.	3	-1810	-425.15	-3441			1472	562	SLU 83	0.16	No
ini.	3	-1261	-202.74	4343			1279	500	SLU 84	0.12	No
fin.	3	-1808	-424.99	-3440			1471	562	SLU 84	0.16	No
ini.	3	-1252	-199.73	4275			1276	499	SLU 81	0.12	No
fin.	3	-1778	-415.75	-3375			1461	559	SLU 81	0.17	No
ini.	3	-1221	-200.03	4219			1265	496	SLU 78	0.12	No
fin.	3	-1784	-420.2	-3370			1463	560	SLU 78	0.17	No
ini.	3	-1215	-197.98	4185			1263	495	SLU 79	0.12	No
fin.	3	-1771	-415.95	-3341			1458	558	SLU 79	0.17	No
ini.	3	-1253	-200.38	4279			1276	499	SLU 82	0.12	No
fin.	3	-1776	-415.58	-3375			1460	559	SLU 82	0.17	No
ini.	3	-1220	-199.38	4215			1265	495	SLU 77	0.12	No
fin.	3	-1786	-420.37	-3371			1464	560	SLU 77	0.17	No
ini.	3	-1212	-197.01	4151			1262	494	SLU 74	0.12	No
fin.	3	-1754	-410.96	-3305			1452	556	SLU 74	0.17	No

Verifiche a pressoflessione delle travi in muratura in combinazioni sismiche

Sezione	γM	N	M	Mu	Comb.	c.s.	Verifica
ini.	2	-6571	-1357.02	1650.16	SLV 3	1.22	Si
fin.	2	1066	1222.13	1650.16	SLV 3	1.35	Si
ini.	2	-815	-0.66	1650.16	SLV 12	2513.76	Si
fin.	2	-3803	-883.31	1650.16	SLV 12	1.87	Si
ini.	2	3963	955.42	1650.16	SLV 15	1.73	Si
fin.	2	-4522	-1859.97	1650.16	SLV 15	0.89	No
ini.	2	3963	955.42	1650.16	SLV 16	1.73	Si
fin.	2	-4522	-1859.97	1650.16	SLV 16	0.89	No
ini.	2	-5636	-1231.25	1650.16	SLV 2	1.34	Si
fin.	2	2127	1309.62	1650.16	SLV 2	1.26	Si
ini.	2	4898	1081.18	1650.16	SLV 14	1.53	Si
fin.	2	-3461	-1772.47	1650.16	SLV 14	0.93	No
ini.	2	-5636	-1231.25	1650.16	SLV 1	1.34	Si
fin.	2	2127	1309.62	1650.16	SLV 1	1.26	Si
ini.	2	-815	-0.66	1650.16	SLV 11	2513.76	Si
fin.	2	-3803	-883.31	1650.16	SLV 11	1.87	Si
ini.	2	-6571	-1357.02	1650.16	SLV 4	1.22	Si
fin.	2	1066	1222.13	1650.16	SLV 4	1.35	Si
ini.	2	4898	1081.18	1650.16	SLV 13	1.53	Si

Sezione	γM	N	M	Mu	Comb.	c.s.	Verifica
fin.	2	-3461	-1772.47	1650.16	SLV 13	0.93	No

Verifiche a taglio delle travi in muratura secondo §C8.7.1.3.1 in combinazioni sismiche

Sezione	γM	N	M	V	Vt	Vp	Vt fess. diag.	Vt,lim	Comb.	c.s.	Verifica
ini.	2	4898	1081.18	-4208			1253	0	SLV 13	0	No
fin.	2	-3461	-1772.47	-8066			2471	920	SLV 13	0.11	No
ini.	2	-5636	-1231.25	8762			3236	1113	SLV 2	0.13	No
fin.	2	2127	1309.62	4237			1253	0	SLV 2	0	No
ini.	2	4898	1081.18	-4208			1253	0	SLV 14	0	No
fin.	2	-3461	-1772.47	-8066			2471	920	SLV 14	0.11	No
ini.	2	3963	955.42	-3221			1253	0	SLV 15	0	No
fin.	2	-4522	-1859.97	-8644			2844	1019	SLV 15	0.12	No
ini.	2	-858	-275.18	3071			1554	614	SLV 5	0.2	No
fin.	2	1408	332.97	605			1253	0	SLV 5	0	No
ini.	2	-858	-275.18	3071			1554	614	SLV 6	0.2	No
fin.	2	1408	332.97	605			1253	0	SLV 6	0	No
ini.	2	2303	418.55	-820			1253	0	SLV 10	0	No
fin.	2	-269	-591.66	-3086			1347	520	SLV 10	0.17	No
ini.	2	3963	955.42	-3221			1253	0	SLV 16	0	No
fin.	2	-4522	-1859.97	-8644			2844	1019	SLV 16	0.12	No
ini.	2	2303	418.55	-820			1253	0	SLV 9	0	No
fin.	2	-269	-591.66	-3086			1347	520	SLV 9	0.17	No
ini.	2	-5636	-1231.25	8762			3236	1113	SLV 1	0.13	No
fin.	2	2127	1309.62	4237			1253	0	SLV 1	0	No

Tabella dei coefficienti di sicurezza minimi

Stato limite	Coeff.s.	Comb.	Verifica
PF_SLV	0.887	SLV 15	No
V_SLV	0	SLV 1	No
PF_SLU	2.588	SLU 83	Si
V_SLU	0.115	SLU 84	No

Trave di accoppiamento 54

Verifiche condotte secondo D.M. 17-01-18 (N.T.C.)

Dati geometrici

X ini.	Y ini.	Z ini.inf.	Z ini.sup.	H ini.	X fin.	Y fin.	Z fin.inf.	Z fin.sup	H fin.	Luce	Spessore	R. Trazione
-8.05	-4.784	3.78	4.35	0.57	-9.89	-4.784	3.78	4.35	0.57	1.84	0.3	30000

Caratteristiche del materiale

(Circolare 7 21-01-19 C8.5.I) Muratura in mattoni pieni e malta di calce LC2_Corti

fb_	fhk	fvk0	fhmedio	τ0	fv0	μ	ϕ	fvk,lim	E	G	FC
120000			172500	9000	20000	0.577	0.767	6500	320000000	128000000	1.2

Verifiche a pressoflessione delle travi in muratura in combinazioni non sismiche

Sezione	γM	N	M	Mu	Comb.	c.s.	Verifica
ini.	3	-198	87.57	494.52	SLU 83	5.65	Si
fin.	3	1045	-162.81	494.52	SLU 83	3.04	Si
ini.	3	-158	69.12	494.52	SLU 39	7.15	Si
fin.	3	885	-144.84	494.52	SLU 39	3.41	Si
ini.	3	-191	84.54	494.52	SLU 81	5.85	Si
fin.	3	1032	-160.43	494.52	SLU 81	3.08	Si
ini.	3	-199	88.6	494.52	SLU 77	5.58	Si
fin.	3	1002	-151.64	494.52	SLU 77	3.26	Si
ini.	3	-166	73.57	494.52	SLU 37	6.72	Si
fin.	3	858	-138.01	494.52	SLU 37	3.58	Si
ini.	3	-94	49.87	494.52	SLU 84	9.92	Si
fin.	3	972	-136.29	494.52	SLU 84	3.63	Si
ini.	3	-165	72.15	494.52	SLU 41	6.85	Si
fin.	3	897	-147.22	494.52	SLU 41	3.36	Si
ini.	3	-200	88.98	494.52	SLU 79	5.56	Si
fin.	3	1005	-153.6	494.52	SLU 79	3.22	Si
ini.	3	-183	81.79	494.52	SLU 62	6.05	Si
fin.	3	941	-137.49	494.52	SLU 62	3.6	Si
ini.	3	-192	85.58	494.52	SLU 74	5.78	Si
fin.	3	990	-149.26	494.52	SLU 74	3.31	Si

Verifiche a taglio delle travi in muratura secondo §C8.7.1.3.1 in combinazioni non sismiche

Sezione	γM	N	M	V	Vt	Vp	Vt fess. diag.	Vt,lim	Comb.	c.s.	Verifica
ini.	3	-184	82.83	42			488	190	SLU 56	4.56	Si
fin.	3	899	-126.32	563			439	0	SLU 56	0	No
ini.	3	-80	45.13	36			460	176	SLU 57	4.88	Si
fin.	3	827	-99.81	585			439	0	SLU 57	0	No
ini.	3	-73	42.11	45			459	176	SLU 54	3.88	Si
fin.	3	815	-97.43	571			439	0	SLU 54	0	No
ini.	3	-177	79.8	51			486	189	SLU 53	3.73	Si
fin.	3	887	-123.94	549			439	0	SLU 53	0	No
ini.	3	-80	45.51	34			460	176	SLU 59	5.16	Si
fin.	3	829	-101.77	582			439	0	SLU 59	0	No
ini.	3	-184	83.21	40			488	190	SLU 58	4.78	Si
fin.	3	901	-128.28	560			439	0	SLU 58	0	No
ini.	3	-72	41.07	75			458	175	SLU 61	2.34	Si
fin.	3	857	-108.6	550			439	0	SLU 61	0	No
ini.	3	-5	17.35	40			440	166	SLU 55	4.18	Si
fin.	3	769	-81.71	582			439	0	SLU 55	0	No
ini.	3	-128	57.99	14			473	183	SLU 1	12.93	Si

Sezione	γM	N	M	V	Vt	Vp	Vt fess. diag.	Vt,lim	Comb.	c.s.	Verifica
fin.	3	609	-80.89	414			439	0	SLU 1	0	No
ini.	3	-176	78.76	80			486	189	SLU 60	2.35	Si
fin.	3	929	-135.11	529			439	0	SLU 60	0	No

Verifiche a pressoflessione delle travi in muratura in combinazioni sismiche

Sezione	γM	N	M	Mu	Comb.	c.s.	Verifica
ini.	2	-1168	439.15	741.78	SLV 3	1.69	Si
fin.	2	2104	-1093.98	741.78	SLV 3	0.68	No
ini.	2	898	-317.74	741.78	SLV 13	2.33	Si
fin.	2	-758	902.28	741.78	SLV 13	0.82	No
ini.	2	-2256	1017.5	741.78	SLV 6	0.73	No
fin.	2	3876	-821.12	741.78	SLV 6	0.9	No
ini.	2	-1168	439.15	741.78	SLV 4	1.69	Si
fin.	2	2104	-1093.98	741.78	SLV 4	0.68	No
ini.	2	-2165	903.33	741.78	SLV 1	0.82	No
fin.	2	3631	-1328.38	741.78	SLV 1	0.56	No
ini.	2	898	-317.74	741.78	SLV 14	2.33	Si
fin.	2	-758	902.28	741.78	SLV 14	0.82	No
ini.	2	1895	-781.91	741.78	SLV 15	0.95	No
fin.	2	-2285	1136.68	741.78	SLV 15	0.65	No
ini.	2	1895	-781.91	741.78	SLV 16	0.95	No
fin.	2	-2285	1136.68	741.78	SLV 16	0.65	No
ini.	2	-2256	1017.5	741.78	SLV 5	0.73	No
fin.	2	3876	-821.12	741.78	SLV 5	0.9	No
ini.	2	-2165	903.33	741.78	SLV 2	0.82	No
fin.	2	3631	-1328.38	741.78	SLV 2	0.56	No

Verifiche a taglio delle travi in muratura secondo §C8.7.1.3.1 in combinazioni sismiche

Sezione	γM	N	M	V	Vt	Vp	Vt fess. diag.	Vt,lim	Comb.	c.s.	Verifica
ini.	2	-1337	651.18	1786			1015	397	SLV 10	0.22	No
fin.	2	2560	-151.92	1391			659	0	SLV 10	0	No
ini.	2	-1337	651.18	1786			1015	397	SLV 9	0.22	No
fin.	2	2560	-151.92	1391			659	0	SLV 9	0	No
ini.	2	-1168	439.15	-1117			970	381	SLV 4	0.34	No
fin.	2	2104	-1093.98	-460			659	0	SLV 4	0	No
ini.	2	-2256	1017.5	1368			1260	473	SLV 6	0.35	No
fin.	2	3876	-821.12	1013			659	0	SLV 6	0	No
ini.	2	-2165	903.33	-195			1236	466	SLV 1	2.39	Si
fin.	2	3631	-1328.38	16			659	0	SLV 1	0	No
ini.	2	1067	-529.76	-1707			659	0	SLV 8	0	No
fin.	2	-1213	-39.78	-574			982	385	SLV 8	0.67	No
ini.	2	-2256	1017.5	1368			1260	473	SLV 5	0.35	No
fin.	2	3876	-821.12	1013			659	0	SLV 5	0	No
ini.	2	-1168	439.15	-1117			970	381	SLV 3	0.34	No
fin.	2	2104	-1093.98	-460			659	0	SLV 3	0	No
ini.	2	-2165	903.33	-195			1236	466	SLV 2	2.39	Si
fin.	2	3631	-1328.38	16			659	0	SLV 2	0	No
ini.	2	1067	-529.76	-1707			659	0	SLV 7	0	No
fin.	2	-1213	-39.78	-574			982	385	SLV 7	0.67	No

Tabella dei coefficienti di sicurezza minimi

Stato limite	Coeff.s.	Comb.	Verifica
PF_SLV	0.558	SLV 1	No
V_SLV	0	SLV 1	No
PF_SLU	3.037	SLU 83	Si
V_SLU	0	SLU 1	No

Trave di accoppiamento 55

Verifiche condotte secondo D.M. 17-01-18 (N.T.C.)

Dati geometrici

X ini.	Y ini.	Z ini.inf.	Z ini.sup.	H ini.	X fin.	Y fin.	Z fin.inf.	Z fin.sup	H fin.	Luce	Spessore	R. Trazione
-8.554	-3.248	2.77	4.35	1.58	-9.454	-3.248	2.77	4.35	1.58	0.9	0.28	30000

Caratteristiche del materiale

(Circolare 7 21-01-19 C8.5.I) Muratura in mattoni pieni e malta di calce LC2_Corti

fb_	fhk	fvk0	fhmedio	τ0	fv0	μ	ϕ	fvk,lim	E	G	FC
120000			172500	9000	20000	0.577	0.767	6500	320000000	128000000	1.2

Verifiche a pressoflessione delle travi in muratura in combinazioni non sismiche

Sezione	γM	N	M	Mu	Comb.	c.s.	Verifica
ini.	3	-2264	-2028.2	3546.36	SLU 58	1.75	Si
fin.	3	-2264	-46.03	3546.36	SLU 58	77.05	Si
ini.	3	-2253	-2007.31	3546.36	SLU 53	1.77	Si
fin.	3	-2253	-56.78	3546.36	SLU 53	62.46	Si
ini.	3	-2273	-2039.1	3546.36	SLU 56	1.74	Si
fin.	3	-2273	-58.99	3546.36	SLU 56	60.12	Si
ini.	3	-2418	-2153.02	3546.36	SLU 77	1.65	Si
fin.	3	-2418	-150.39	3546.36	SLU 77	23.58	Si
ini.	3	-2410	-2142.11	3546.36	SLU 79	1.66	Si
fin.	3	-2410	-137.43	3546.36	SLU 79	25.81	Si
ini.	3	-2308	-2028.56	3546.36	SLU 60	1.75	Si
fin.	3	-2308	-65.55	3546.36	SLU 60	54.1	Si
ini.	3	-2398	-2121.22	3546.36	SLU 74	1.67	Si
fin.	3	-2398	-148.18	3546.36	SLU 74	23.93	Si
ini.	3	-2453	-2142.48	3546.36	SLU 81	1.66	Si

Sezione	γM	N	M	Mu	Comb.	c.s.	Verifica
fin.	3	-2453	-156.95	3546.36	SLU 81	22.6	Si
ini.	3	-2328	-2060.36	3546.36	SLU 62	1.72	Si
fin.	3	-2328	-67.76	3546.36	SLU 62	52.33	Si
ini.	3	-2473	-2174.27	3546.36	SLU 83	1.63	Si
fin.	3	-2473	-159.16	3546.36	SLU 83	22.28	Si

Verifiche a taglio delle travi in muratura secondo §C8.7.1.3.1 in combinazioni non sismiche

Sezione	γM	N	M	V	Vt	Vp	Vt fess. diag.	Vt,lim	Comb.	c.s.	Verifica
ini.	3	-2410	-2142.11	3252			2668	1041	SLU 79	0.32	No
fin.	3	-2410	-137.43	1194			2668	1041	SLU 79	0.87	No
ini.	3	-2283	-1841	3077			2617	1024	SLU 82	0.33	No
fin.	3	-2283	-64.03	862			2617	1024	SLU 82	1.19	Si
ini.	3	-2473	-2174.27	3342			2693	1049	SLU 83	0.31	No
fin.	3	-2473	-159.16	1127			2693	1049	SLU 83	0.93	No
ini.	3	-2418	-2153.02	3249			2671	1042	SLU 77	0.32	No
fin.	3	-2418	-150.39	1192			2671	1042	SLU 77	0.87	No
ini.	3	-2264	-2028.2	3075			2609	1021	SLU 58	0.33	No
fin.	3	-2264	-46.03	1320			2609	1021	SLU 58	0.77	No
ini.	3	-2453	-2142.48	3309			2685	1046	SLU 81	0.32	No
fin.	3	-2453	-156.95	1094			2685	1046	SLU 81	0.96	No
ini.	3	-2328	-2060.36	3165			2635	1030	SLU 62	0.33	No
fin.	3	-2328	-67.76	1253			2635	1030	SLU 62	0.82	No
ini.	3	-2398	-2121.22	3216			2663	1039	SLU 74	0.32	No
fin.	3	-2398	-148.18	1159			2663	1039	SLU 74	0.9	No
ini.	3	-2303	-1872.8	3110			2625	1026	SLU 84	0.33	No
fin.	3	-2303	-66.24	895			2625	1026	SLU 84	1.15	Si
ini.	3	-2308	-2028.56	3132			2627	1027	SLU 60	0.33	No
fin.	3	-2308	-65.55	1220			2627	1027	SLU 60	0.84	No

Verifiche a pressoflessione delle travi in muratura in combinazioni sismiche

Sezione	γM	N	M	Mu	Comb.	c.s.	Verifica
ini.	2	-7217	-5575.74	5319.53	SLV 10	0.95	No
fin.	2	-7153	59.53	5319.53	SLV 10	89.36	Si
ini.	2	-4305	-6393.65	5319.53	SLV 14	0.83	No
fin.	2	-4256	5390.01	5319.53	SLV 14	0.99	No
ini.	2	-1182	-4675.09	5319.53	SLV 16	1.14	Si
fin.	2	-1165	6391.44	5319.53	SLV 16	0.83	No
ini.	2	911	3390.29	5319.53	SLV 3	1.57	Si
fin.	2	862	-5500.39	5319.53	SLV 3	0.97	No
ini.	2	-1182	-4675.09	5319.53	SLV 15	1.14	Si
fin.	2	-1165	6391.44	5319.53	SLV 15	0.83	No
ini.	2	911	3390.29	5319.53	SLV 4	1.57	Si
fin.	2	862	-5500.39	5319.53	SLV 4	0.97	No
ini.	2	-2212	1671.74	5319.53	SLV 2	3.18	Si
fin.	2	-2229	-6501.82	5319.53	SLV 2	0.82	No
ini.	2	-7217	-5575.74	5319.53	SLV 9	0.95	No
fin.	2	-7153	59.53	5319.53	SLV 9	89.36	Si
ini.	2	-2212	1671.74	5319.53	SLV 1	3.18	Si
fin.	2	-2229	-6501.82	5319.53	SLV 1	0.82	No
ini.	2	-4305	-6393.65	5319.53	SLV 13	0.83	No
fin.	2	-4256	5390.01	5319.53	SLV 13	0.99	No

Verifiche a taglio delle travi in muratura secondo §C8.7.1.3.1 in combinazioni sismiche

Sezione	γM	N	M	V	Vt	Vp	Vt fess. diag.	Vt,lim	Comb.	c.s.	Verifica
ini.	2	3195	152.78	4322			2556	0	SLV 12	0	No
fin.	2	3150	3397.64	3254			2556	0	SLV 12	0	No
ini.	2	911	3390.29	-9266			2556	738	SLV 3	0.08	No
fin.	2	862	-5500.39	-10438			2556	751	SLV 3	0.07	No
ini.	2	-1182	-4675.09	13034			3028	1191	SLV 16	0.09	No
fin.	2	-1165	6391.44	11705			3022	1188	SLV 16	0.1	No
ini.	2	911	3390.29	-9266			2556	738	SLV 4	0.08	No
fin.	2	862	-5500.39	-10438			2556	751	SLV 4	0.07	No
ini.	2	3195	152.78	4322			2556	0	SLV 11	0	No
fin.	2	3150	3397.64	3254			2556	0	SLV 11	0	No
ini.	2	3823	2572.39	-2368			2556	0	SLV 7	0	No
fin.	2	3759	-169.91	-3388			2556	0	SLV 7	0	No
ini.	2	-4305	-6393.65	13812			4278	1651	SLV 14	0.12	No
fin.	2	-4256	5390.01	12306			4258	1645	SLV 14	0.13	No
ini.	2	3823	2572.39	-2368			2556	0	SLV 8	0	No
fin.	2	3759	-169.91	-3388			2556	0	SLV 8	0	No
ini.	2	-1182	-4675.09	13034			3028	1191	SLV 15	0.09	No
fin.	2	-1165	6391.44	11705			3022	1188	SLV 15	0.1	No
ini.	2	-4305	-6393.65	13812			4278	1651	SLV 13	0.12	No
fin.	2	-4256	5390.01	12306			4258	1645	SLV 13	0.13	No

Tabella dei coefficienti di sicurezza minimi

Stato limite	Coeff.s.	Comb.	Verifica
PF_SLV	0.818	SLV 1	No
V_SLV	0	SLV 7	No
PF_SLU	1.631	SLU 83	Si
V_SLU	0.314	SLU 83	No

Trave di accoppiamento 56

Verifiche condotte secondo D.M. 17-01-18 (N.T.C.)

Dati geometrici

X ini.	Y ini.	Z ini.inf.	Z ini.sup.	H ini.	X fin.	Y fin.	Z fin.inf.	Z fin.sup	H fin.	Luce	Spessore	R. Trazione
-7.723	-3.499	3.78	4.35	0.57	-7.723	-4.589	3.78	4.35	0.57	1.09	0.3	30000

Caratteristiche del materiale

(Circolare 7 21-01-19 C8.5.I) Muratura in mattoni pieni e malta di calce LC2_Corti

fb_	fhk	fvk0	fhmedio	τ0	fv0	μ	ϕ	fvk,lim	E	G	FC
120000			172500	9000	20000	0.577	0.767	6500	320000000	128000000	1.2

Verifiche a pressoflessione delle travi in muratura in combinazioni non sismiche

Sezione	γM	N	M	Mu	Comb.	c.s.	Verifica
ini.	3	25	-28.59	494.52	SLU 31	17.3	Si
fin.	3	-128	180.09	494.52	SLU 31	2.75	Si
ini.	3	-15	-11.38	494.52	SLU 76	43.44	Si
fin.	3	-161	202.68	494.52	SLU 76	2.44	Si
ini.	3	18	-23.16	494.52	SLU 65	21.36	Si
fin.	3	-149	196.82	494.52	SLU 65	2.51	Si
ini.	3	14	-21.62	494.52	SLU 68	22.88	Si
fin.	3	-150	196.92	494.52	SLU 68	2.51	Si
ini.	3	-12	-12.92	494.52	SLU 73	38.27	Si
fin.	3	-161	202.57	494.52	SLU 73	2.44	Si
ini.	3	42	-30.98	494.52	SLU 47	15.96	Si
fin.	3	-143	194.17	494.52	SLU 47	2.55	Si
ini.	3	15	-22.28	494.52	SLU 52	22.19	Si
fin.	3	-153	199.82	494.52	SLU 52	2.47	Si
ini.	3	21	-27.05	494.52	SLU 34	18.28	Si
fin.	3	-129	180.19	494.52	SLU 34	2.74	Si
ini.	3	45	-32.52	494.52	SLU 44	15.21	Si
fin.	3	-142	194.07	494.52	SLU 44	2.55	Si
ini.	3	12	-20.74	494.52	SLU 55	23.84	Si
fin.	3	-154	199.92	494.52	SLU 55	2.47	Si

Verifiche a taglio delle travi in muratura secondo §C8.7.1.3.1 in combinazioni non sismiche

Sezione	γM	N	M	V	Vt	Vp	Vt fess. diag.	Vt,lim	Comb.	c.s.	Verifica
ini.	3	-122	37.44	-1197			472	182	SLU 84	0.15	No
fin.	3	-169	167.75	195			484	188	SLU 84	0.97	No
ini.	3	-113	34.59	-1166			469	181	SLU 80	0.16	No
fin.	3	-165	165.38	190			483	188	SLU 80	0.99	No
ini.	3	-119	35.9	-1172			471	182	SLU 82	0.16	No
fin.	3	-168	167.65	190			484	188	SLU 82	0.99	No
ini.	3	-260	102.56	-1283			508	199	SLU 81	0.16	No
fin.	3	-172	111.55	153			485	189	SLU 81	1.23	Si
ini.	3	-263	104.1	-1308			509	200	SLU 83	0.15	No
fin.	3	-173	111.65	159			485	189	SLU 83	1.19	Si
ini.	3	-113	35.23	-1153			469	181	SLU 75	0.16	No
fin.	3	-163	164.23	182			483	187	SLU 75	1.03	Si
ini.	3	-117	36.77	-1178			470	181	SLU 78	0.15	No
fin.	3	-164	164.34	187			483	187	SLU 78	1	Si
ini.	3	-15	-11.38	-1067			443	167	SLU 76	0.16	No
fin.	3	-161	202.68	209			482	187	SLU 76	0.9	No
ini.	3	-254	101.25	-1278			507	199	SLU 79	0.16	No
fin.	3	-169	109.29	154			484	188	SLU 79	1.22	Si
ini.	3	-258	103.43	-1290			508	199	SLU 77	0.15	No
fin.	3	-168	108.24	151			484	188	SLU 77	1.24	Si

Verifiche a pressoflessione delle travi in muratura in combinazioni sismiche

Sezione	γM	N	M	Mu	Comb.	c.s.	Verifica
ini.	2	-29	-103.63	741.78	SLV 15	7.16	Si
fin.	2	-1360	956.32	741.78	SLV 15	0.78	No
ini.	2	1736	-1335.04	741.78	SLV 12	0.56	No
fin.	2	-2181	1782.66	741.78	SLV 12	0.42	No
ini.	2	2021	-1499.17	741.78	SLV 7	0.49	No
fin.	2	-1772	1541.9	741.78	SLV 7	0.48	No
ini.	2	-2360	1636.19	741.78	SLV 9	0.45	No
fin.	2	1529	-1380.84	741.78	SLV 9	0.54	No
ini.	2	-2360	1636.19	741.78	SLV 10	0.45	No
fin.	2	1529	-1380.84	741.78	SLV 10	0.54	No
ini.	2	-2076	1472.07	741.78	SLV 5	0.5	No
fin.	2	1938	-1621.6	741.78	SLV 5	0.46	No
ini.	2	-29	-103.63	741.78	SLV 16	7.16	Si
fin.	2	-1360	956.32	741.78	SLV 16	0.78	No
ini.	2	2021	-1499.17	741.78	SLV 8	0.49	No
fin.	2	-1772	1541.9	741.78	SLV 8	0.48	No
ini.	2	-2076	1472.07	741.78	SLV 6	0.5	No
fin.	2	1938	-1621.6	741.78	SLV 6	0.46	No
ini.	2	1736	-1335.04	741.78	SLV 11	0.56	No
fin.	2	-2181	1782.66	741.78	SLV 11	0.42	No

Verifiche a taglio delle travi in muratura secondo §C8.7.1.3.1 in combinazioni sismiche

Sezione	γM	N	M	V	Vt	Vp	Vt fess. diag.	Vt,lim	Comb.	c.s.	Verifica
ini.	2	-2360	1636.19	-1103			1288	481	SLV 9	0.44	No
fin.	2	1529	-1380.84	-1671			659	0	SLV 9	0	No
ini.	2	-2076	1472.07	-1524			1212	459	SLV 5	0.3	No
fin.	2	1938	-1621.6	-1941			659	0	SLV 5	0	No
ini.	2	919	-650.72	-1418			659	0	SLV 4	0	No
fin.	2	3	153.79	216			659	247	SLV 4	1.15	Si
ini.	2	919	-650.72	-1418			659	0	SLV 3	0	No
fin.	2	3	153.79	216			659	247	SLV 3	1.15	Si
ini.	2	-2360	1636.19	-1103			1288	481	SLV 10	0.44	No
fin.	2	1529	-1380.84	-1671			659	0	SLV 10	0	No

Sezione	γM	N	M	V	Vt	Vp	Vt fess. diag.	Vt,lim	Comb.	c.s.	Verifica
ini.	2	2021	-1499.17	-605			659	0	SLV 7	0	No
fin.	2	-1772	1541.9	1861			1131	434	SLV 7	0.23	No
ini.	2	-310	240.65	-1693			741	289	SLV 1	0.17	No
fin.	2	1116	-795.26	-925			659	0	SLV 1	0	No
ini.	2	-310	240.65	-1693			741	289	SLV 2	0.17	No
fin.	2	1116	-795.26	-925			659	0	SLV 2	0	No
ini.	2	-2076	1472.07	-1524			1212	459	SLV 6	0.3	No
fin.	2	1938	-1621.6	-1941			659	0	SLV 6	0	No
ini.	2	2021	-1499.17	-605			659	0	SLV 8	0	No
fin.	2	-1772	1541.9	1861			1131	434	SLV 8	0.23	No

Tabella dei coefficienti di sicurezza minimi

Stato limite	Coeff.s.	Comb.	Verifica
PF_SLV	0.416	SLV 11	No
V_SLV	0	SLV 1	No
PF_SLU	2.44	SLU 76	Si
V_SLU	0.152	SLU 84	No

Trave di accoppiamento 57

Verifiche condotte secondo D.M. 17-01-18 (N.T.C.)

Dati geometrici

X ini.	Y ini.	Z ini.inf.	Z ini.sup.	H ini.	X fin.	Y fin.	Z fin.inf.	Z fin.sup	H fin.	Luce	Spessore	R. Trazione
-5.158	1.405	2.77	4.35	1.58	-5.158	2.105	2.77	4.35	1.58	0.7	0.14	30000

Caratteristiche del materiale

(Circolare 7 21-01-19 C8.5.I) Muratura in mattoni pieni e malta di calce LC2_Corti

fb_	fhk	fvk0	fhmedio	τ0	fv0	μ	ϕ	fvk,lim	E	G	FC
120000			172500	9000	20000	0.577	0.767	6500	320000000	128000000	1.2

Verifiche a pressoflessione delle travi in muratura in combinazioni non sismiche

Sezione	γM	N	M	Mu	Comb.	c.s.	Verifica
ini.	3	43	-24.24	1773.18	SLU 82	73.16	Si
fin.	3	43	-645.14	1773.18	SLU 82	2.75	Si
ini.	3	59	-26.82	1773.18	SLU 37	66.12	Si
fin.	3	59	-595.28	1773.18	SLU 37	2.98	Si
ini.	3	46	-25.6	1773.18	SLU 84	69.26	Si
fin.	3	46	-667.17	1773.18	SLU 84	2.66	Si
ini.	3	57	-30.46	1773.18	SLU 41	58.22	Si
fin.	3	57	-673.39	1773.18	SLU 41	2.63	Si
ini.	3	34	-26.98	1773.18	SLU 42	65.73	Si
fin.	3	34	-669.19	1773.18	SLU 42	2.65	Si
ini.	3	66	-27.72	1773.18	SLU 81	63.97	Si
fin.	3	66	-649.33	1773.18	SLU 81	2.73	Si
ini.	3	69	-29.08	1773.18	SLU 83	60.97	Si
fin.	3	69	-671.37	1773.18	SLU 83	2.64	Si
ini.	3	54	-29.09	1773.18	SLU 39	60.95	Si
fin.	3	54	-651.36	1773.18	SLU 39	2.72	Si
ini.	3	31	-25.61	1773.18	SLU 40	69.23	Si
fin.	3	31	-647.16	1773.18	SLU 40	2.74	Si
ini.	3	59	-27.39	1773.18	SLU 35	64.73	Si
fin.	3	59	-595.63	1773.18	SLU 35	2.98	Si

Verifiche a taglio delle travi in muratura secondo §C8.7.1.3.1 in combinazioni non sismiche

Sezione	γM	N	M	V	Vt	Vp	Vt fess. diag.	Vt,lim	Comb.	c.s.	Verifica
ini.	3	43	-24.24	-687			852	311	SLU 82	0.45	No
fin.	3	43	-645.14	-1119			852	311	SLU 82	0.28	No
ini.	3	54	-29.09	-733			852	309	SLU 39	0.42	No
fin.	3	54	-651.36	-1071			852	309	SLU 39	0.29	No
ini.	3	66	-27.72	-688			852	306	SLU 81	0.44	No
fin.	3	66	-649.33	-1120			852	306	SLU 81	0.27	No
ini.	3	31	-25.61	-732			852	314	SLU 40	0.43	No
fin.	3	31	-647.16	-1070			852	314	SLU 40	0.29	No
ini.	3	46	-25.6	-717			852	311	SLU 84	0.43	No
fin.	3	46	-667.17	-1148			852	311	SLU 84	0.27	No
ini.	3	34	-26.98	-761			852	313	SLU 42	0.41	No
fin.	3	34	-669.19	-1100			852	313	SLU 42	0.28	No
ini.	3	71	-26.02	-611			852	305	SLU 77	0.5	No
fin.	3	71	-593.61	-1043			852	305	SLU 77	0.29	No
ini.	3	71	-25.44	-611			852	305	SLU 79	0.5	No
fin.	3	71	-593.25	-1043			852	305	SLU 79	0.29	No
ini.	3	69	-29.08	-718			852	305	SLU 83	0.43	No
fin.	3	69	-671.37	-1149			852	305	SLU 83	0.27	No
ini.	3	57	-30.46	-762			852	308	SLU 41	0.4	No
fin.	3	57	-673.39	-1101			852	308	SLU 41	0.28	No

Verifiche a pressoflessione delle travi in muratura in combinazioni sismiche

Sezione	γM	N	M	Mu	Comb.	c.s.	Verifica
ini.	2	-1028	257.23	2659.77	SLV 7	10.34	Si
fin.	2	-586	-7567.11	2659.77	SLV 7	0.35	No
ini.	2	-1457	-662.71	2659.77	SLV 4	4.01	Si
fin.	2	-722	-4114.66	2659.77	SLV 4	0.65	No
ini.	2	-1028	257.23	2659.77	SLV 8	10.34	Si
fin.	2	-586	-7567.11	2659.77	SLV 8	0.35	No
ini.	2	1123	-277.39	2659.77	SLV 9	9.59	Si
fin.	2	681	7014.7	2659.77	SLV 9	0.38	No

Sezione	γM	N	M	Mu	Comb.	c.s.	Verifica
ini.	2	-249	740.41	2659.77	SLV 11	3.59	Si
fin.	2	-204	-6478.42	2659.77	SLV 11	0.41	No
ini.	2	344	-760.57	2659.77	SLV 5	3.5	Si
fin.	2	299	5926.01	2659.77	SLV 5	0.45	No
ini.	2	-249	740.41	2659.77	SLV 12	3.59	Si
fin.	2	-204	-6478.42	2659.77	SLV 12	0.41	No
ini.	2	1123	-277.39	2659.77	SLV 10	9.59	Si
fin.	2	681	7014.7	2659.77	SLV 10	0.38	No
ini.	2	-1457	-662.71	2659.77	SLV 3	4.01	Si
fin.	2	-722	-4114.66	2659.77	SLV 3	0.65	No
ini.	2	344	-760.57	2659.77	SLV 6	3.5	Si
fin.	2	299	5926.01	2659.77	SLV 6	0.45	No

Verifiche a taglio delle travi in muratura secondo §C8.7.1.3.1 in combinazioni sismiche

Sezione	γM	N	M	V	Vt	Vp	Vt fess. diag.	Vt,lim	Comb.	c.s.	Verifica
ini.	2	1123	-277.39	9777			1278	0	SLV 9	0	No
fin.	2	681	7014.7	9405			1278	298	SLV 9	0.03	No
ini.	2	1123	-277.39	9777			1278	0	SLV 10	0	No
fin.	2	681	7014.7	9405			1278	298	SLV 10	0.03	No
ini.	2	1552	642.55	2878			1278	0	SLV 13	0	No
fin.	2	817	3562.25	1891			1278	246	SLV 13	0.13	No
ini.	2	1140	947.89	-3104			1278	0	SLV 16	0	No
fin.	2	552	-485.69	-4193			1278	340	SLV 16	0.08	No
ini.	2	344	-760.57	9708			1278	399	SLV 5	0.04	No
fin.	2	299	5926.01	9761			1278	411	SLV 5	0.04	No
ini.	2	-249	740.41	-10164			1377	532	SLV 12	0.05	No
fin.	2	-204	-6478.42	-10875			1359	523	SLV 12	0.05	No
ini.	2	1140	947.89	-3104			1278	0	SLV 15	0	No
fin.	2	552	-485.69	-4193			1278	340	SLV 15	0.08	No
ini.	2	1552	642.55	2878			1278	0	SLV 14	0	No
fin.	2	817	3562.25	1891			1278	246	SLV 14	0.13	No
ini.	2	344	-760.57	9708			1278	399	SLV 6	0.04	No
fin.	2	299	5926.01	9761			1278	411	SLV 6	0.04	No
ini.	2	-249	740.41	-10164			1377	532	SLV 11	0.05	No
fin.	2	-204	-6478.42	-10875			1359	523	SLV 11	0.05	No

Tabella dei coefficienti di sicurezza minimi

Stato limite	Coeff.s.	Comb.	Verifica
PF_SLV	0.351	SLV 7	No
V_SLV	0	SLV 9	No
PF_SLU	2.633	SLU 41	Si
V_SLU	0.266	SLU 83	No

Trave di accoppiamento 58

Verifiche condotte secondo D.M. 17-01-18 (N.T.C.)

Dati geometrici

X ini.	Y ini.	Z ini.inf.	Z ini.sup.	H ini.	X fin.	Y fin.	Z fin.inf.	Z fin.sup	H fin.	Luce	Spessore	R. Trazione
-6.464	-3.248	0.67	1.57	0.9	-7.464	-3.248	0.67	1.57	0.9	1	0.28	30000

Caratteristiche del materiale

(Circolare 7 21-01-19 C8.5.I) Muratura in mattoni pieni e malta di calce LC2_Corti

fb_	fhk	fvk0	fhmedio	τ0	fv0	μ	ϕ	fvk,lim	E	G	FC
120000			172500	9000	20000	0.577	0.767	6500	320000000	128000000	1.2

Verifiche a pressoflessione delle travi in muratura in combinazioni non sismiche

Sezione	γM	N	M	Mu	Comb.	c.s.	Verifica
ini.	3	-1777	-1669.33	1150.68	SLU 79	0.69	No
fin.	3	-2501	1525.2	1150.68	SLU 79	0.75	No
ini.	3	-707	-1589.84	1150.68	SLU 78	0.72	No
fin.	3	-1642	1411.49	1150.68	SLU 78	0.82	No
ini.	3	-1797	-1676.52	1150.68	SLU 77	0.69	No
fin.	3	-2520	1530.59	1150.68	SLU 77	0.75	No
ini.	3	-637	-1625.8	1150.68	SLU 82	0.71	No
fin.	3	-1615	1438.66	1150.68	SLU 82	0.8	No
ini.	3	-1727	-1712.49	1150.68	SLU 81	0.67	No
fin.	3	-2492	1557.76	1150.68	SLU 81	0.74	No
ini.	3	-676	-1643.2	1150.68	SLU 84	0.7	No
fin.	3	-1657	1455.54	1150.68	SLU 84	0.79	No
ini.	3	-1665	-1579.83	1150.68	SLU 62	0.73	No
fin.	3	-2366	1452.15	1150.68	SLU 62	0.79	No
ini.	3	-687	-1582.64	1150.68	SLU 80	0.73	No
fin.	3	-1623	1406.1	1150.68	SLU 80	0.82	No
ini.	3	-1766	-1729.88	1150.68	SLU 83	0.67	No
fin.	3	-2534	1574.64	1150.68	SLU 83	0.73	No
ini.	3	-1759	-1659.13	1150.68	SLU 74	0.69	No
fin.	3	-2477	1513.71	1150.68	SLU 74	0.76	No

Verifiche a taglio delle travi in muratura secondo §C8.7.1.3.1 in combinazioni non sismiche

Sezione	γM	N	M	V	Vt	Vp	Vt fess. diag.	Vt,lim	Comb.	c.s.	Verifica
ini.	3	507	-1096.38	1307			873	207	SLU 13	0.16	No
fin.	3	-395	939.43	3635			1016	399	SLU 13	0.11	No
ini.	3	218	-1340.01	1599			873	283	SLU 52	0.18	No
fin.	3	-786	1170.44	4402			1156	457	SLU 52	0.1	No
ini.	3	117	-1490.07	1794			873	305	SLU 73	0.17	No
fin.	3	-954	1292.93	4827			1217	480	SLU 73	0.1	No

Sezione	γM	N	M	V	Vt	Vp	Vt fess. diag.	Vt,lim	Comb.	c.s.	Verifica
ini.	3	444	-1229.03	1491			873	226	SLU 31	0.15	No
fin.	3	-521	1045.04	3995			1061	418	SLU 31	0.1	No
ini.	3	78	-1507.46	1804			873	313	SLU 76	0.17	No
fin.	3	-996	1309.81	4892			1232	486	SLU 76	0.1	No
ini.	3	179	-1357.41	1610			873	292	SLU 55	0.18	No
fin.	3	-828	1187.32	4467			1172	463	SLU 55	0.1	No
ini.	3	406	-1246.43	1501			873	236	SLU 34	0.16	No
fin.	3	-563	1061.93	4060			1076	425	SLU 34	0.1	No
ini.	3	142	-1325.59	1527			873	300	SLU 68	0.2	No
fin.	3	-819	1155.05	4383			1168	462	SLU 68	0.11	No
ini.	3	181	-1308.19	1516			873	291	SLU 65	0.19	No
fin.	3	-777	1138.17	4318			1153	456	SLU 65	0.11	No
ini.	3	-676	-1643.2	2009			1117	442	SLU 84	0.22	No
fin.	3	-1657	1455.54	5190			1470	567	SLU 84	0.11	No

Verifiche a pressoflessione delle travi in muratura in combinazioni sismiche

Sezione	γM	N	M	Mu	Comb.	c.s.	Verifica
ini.	2	-8631	-2384.34	1726.01	SLV 12	0.72	No
fin.	2	-5543	1653	1726.01	SLV 12	1.04	Si
ini.	2	-8089	-1407.04	1726.01	SLV 8	1.23	Si
fin.	2	-3340	316.32	1726.01	SLV 8	5.46	Si
ini.	2	-25	-2537.49	1726.01	SLV 14	0.68	No
fin.	2	-4596	3291.56	1726.01	SLV 14	0.52	No
ini.	2	5580	-865.81	1726.01	SLV 10	1.99	Si
fin.	2	-132	1774.69	1726.01	SLV 10	0.97	No
ini.	2	-4289	-2993.04	1726.01	SLV 15	0.58	No
fin.	2	-6220	3255.05	1726.01	SLV 15	0.53	No
ini.	2	-8089	-1407.04	1726.01	SLV 7	1.23	Si
fin.	2	-3340	316.32	1726.01	SLV 7	5.46	Si
ini.	2	5580	-865.81	1726.01	SLV 9	1.99	Si
fin.	2	-132	1774.69	1726.01	SLV 9	0.97	No
ini.	2	-25	-2537.49	1726.01	SLV 13	0.68	No
fin.	2	-4596	3291.56	1726.01	SLV 13	0.52	No
ini.	2	-4289	-2993.04	1726.01	SLV 16	0.58	No
fin.	2	-6220	3255.05	1726.01	SLV 16	0.53	No
ini.	2	-8631	-2384.34	1726.01	SLV 11	0.72	No
fin.	2	-5543	1653	1726.01	SLV 11	1.04	Si

Verifiche a taglio delle travi in muratura secondo §C8.7.1.3.1 in combinazioni sismiche

Sezione	γM	N	M	V	Vt	Vp	Vt fess. diag.	Vt,lim	Comb.	c.s.	Verifica
ini.	2	5580	-865.81	2326			1310	0	SLV 10	0	No
fin.	2	-132	1774.69	7158			1358	518	SLV 10	0.07	No
ini.	2	6122	111.49	-664			1310	0	SLV 5	0	No
fin.	2	2072	438	3988			1310	0	SLV 5	0	No
ini.	2	6122	111.49	-664			1310	0	SLV 6	0	No
fin.	2	2072	438	3988			1310	0	SLV 6	0	No
ini.	2	5580	-865.81	2326			1310	0	SLV 9	0	No
fin.	2	-132	1774.69	7158			1358	518	SLV 9	0.07	No
ini.	2	-25	-2537.49	6189			1319	498	SLV 14	0.08	No
fin.	2	-4596	3291.56	9424			2965	1063	SLV 14	0.11	No
ini.	2	-2483	264.63	-3454			2204	850	SLV 3	0.25	No
fin.	2	1125	-1200.55	-2373			1310	162	SLV 3	0.07	No
ini.	2	1780	720.19	-3776			1310	0	SLV 2	0	No
fin.	2	2748	-1164.05	-1145			1310	0	SLV 2	0	No
ini.	2	1780	720.19	-3776			1310	0	SLV 1	0	No
fin.	2	2748	-1164.05	-1145			1310	0	SLV 1	0	No
ini.	2	-25	-2537.49	6189			1319	498	SLV 13	0.08	No
fin.	2	-4596	3291.56	9424			2965	1063	SLV 13	0.11	No
ini.	2	-2483	264.63	-3454			2204	850	SLV 4	0.25	No
fin.	2	1125	-1200.55	-2373			1310	162	SLV 4	0.07	No

Tabella dei coefficienti di sicurezza minimi

Stato limite	Coeff.s.	Comb.	Verifica
PF_SLV	0.524	SLV 13	No
V_SLV	0	SLV 1	No
PF_SLU	0.665	SLU 83	No
V_SLU	0.099	SLU 76	No

Trave di accoppiamento 59

Verifiche condotte secondo D.M. 17-01-18 (N.T.C.)

Dati geometrici

X ini.	Y ini.	Z ini.inf.	Z ini.sup.	H ini.	X fin.	Y fin.	Z fin.inf.	Z fin.sup	H fin.	Luce	Spessore	R. Trazione
-6.464	-3.248	3.47	4.35	0.88	-7.464	-3.248	3.47	4.35	0.88	1	0.28	30000

Caratteristiche del materiale

(Circolare 7 21-01-19 C8.5.I) Muratura in mattoni pieni e malta di calce LC2_Corti

fb_	fhk	fvk0	fhmedio	τ0	fv0	μ	ϕ	fvk,lim	E	G	FC
120000			172500	9000	20000	0.577	0.767	6500	320000000	128000000	1.2

Verifiche a pressoflessione delle travi in muratura in combinazioni non sismiche

Sezione	γM	N	M	Mu	Comb.	c.s.	Verifica
ini.	3	-1256	-909.66	1100.1	SLU 80	1.21	Si
fin.	3	1286	435.18	1100.1	SLU 80	2.53	Si
ini.	3	-1324	-942.88	1100.1	SLU 84	1.17	Si
fin.	3	1337	457.74	1100.1	SLU 84	2.4	Si

Sezione	γM	N	M	Mu	Comb.	c.s.	Verifica
ini.	3	-1295	-973.08	1100.1	SLU 83	1.13	Si
fin.	3	1356	458.65	1100.1	SLU 83	2.4	Si
ini.	3	-1317	-931.56	1100.1	SLU 82	1.18	Si
fin.	3	1317	453.6	1100.1	SLU 82	2.43	Si
ini.	3	-1227	-939.86	1100.1	SLU 79	1.17	Si
fin.	3	1306	436.1	1100.1	SLU 79	2.52	Si
ini.	3	-1214	-932.72	1100.1	SLU 74	1.18	Si
fin.	3	1294	432.97	1100.1	SLU 74	2.54	Si
ini.	3	-1288	-961.76	1100.1	SLU 81	1.14	Si
fin.	3	1336	454.52	1100.1	SLU 81	2.42	Si
ini.	3	-1220	-944.04	1100.1	SLU 77	1.17	Si
fin.	3	1313	437.11	1100.1	SLU 77	2.52	Si
ini.	3	-1249	-913.84	1100.1	SLU 78	1.2	Si
fin.	3	1294	436.19	1100.1	SLU 78	2.52	Si
ini.	3	-1243	-902.52	1100.1	SLU 75	1.22	Si
fin.	3	1275	432.05	1100.1	SLU 75	2.55	Si

Verifiche a taglio delle travi in muratura secondo §C8.7.1.3.1 in combinazioni non sismiche

Sezione	γM	N	M	V	Vt	Vp	Vt fess. diag.	Vt,lim	Comb.	c.s.	Verifica
ini.	3	-1122	-849.01	6022			1230	483	SLU 53	0.08	No
fin.	3	1146	383.27	-606			835	0	SLU 53	0	No
ini.	3	-1136	-856.15	6070			1235	485	SLU 58	0.08	No
fin.	3	1157	386.39	-606			835	0	SLU 58	0	No
ini.	3	-1165	-825.95	5993			1245	489	SLU 59	0.08	No
fin.	3	1138	385.47	-628			835	0	SLU 59	0	No
ini.	3	-1129	-796.59	5865			1232	484	SLU 42	0.08	No
fin.	3	1155	397.96	-544			835	0	SLU 42	0	No
ini.	3	-1151	-818.81	5945			1240	487	SLU 54	0.08	No
fin.	3	1127	382.35	-628			835	0	SLU 54	0	No
ini.	3	-1197	-878.05	6234			1256	493	SLU 60	0.08	No
fin.	3	1188	404.81	-585			835	0	SLU 60	0	No
ini.	3	-1226	-847.85	6157			1266	496	SLU 61	0.08	No
fin.	3	1169	403.89	-606			835	0	SLU 61	0	No
ini.	3	-1129	-860.33	6103			1232	484	SLU 56	0.08	No
fin.	3	1165	387.4	-619			835	0	SLU 56	0	No
ini.	3	-1178	-794.49	5860			1250	490	SLU 55	0.08	No
fin.	3	1106	380.72	-629			835	0	SLU 55	0	No
ini.	3	-1158	-830.12	6026			1243	488	SLU 57	0.08	No
fin.	3	1146	386.49	-640			835	0	SLU 57	0	No

Verifiche a pressoflessione delle travi in muratura in combinazioni sismiche

Sezione	γM	N	M	Mu	Comb.	c.s.	Verifica
ini.	2	-5643	-1801.5	1650.16	SLV 13	0.92	No
fin.	2	1354	798.87	1650.16	SLV 13	2.07	Si
ini.	2	-2274	-929.89	1650.16	SLV 11	1.77	Si
fin.	2	4371	1146.46	1650.16	SLV 11	1.44	Si
ini.	2	-5643	-1770.45	1650.16	SLV 16	0.93	No
fin.	2	3204	1187.03	1650.16	SLV 16	1.39	Si
ini.	2	-5643	-1770.45	1650.16	SLV 15	0.93	No
fin.	2	3204	1187.03	1650.16	SLV 15	1.39	Si
ini.	2	-5643	-1801.5	1650.16	SLV 14	0.92	No
fin.	2	1354	798.87	1650.16	SLV 14	2.07	Si
ini.	2	-2275	-1033.38	1650.16	SLV 10	1.6	Si
fin.	2	-1796	-147.41	1650.16	SLV 10	11.19	Si
ini.	2	614	-240.45	1650.16	SLV 8	6.86	Si
fin.	2	3522	723.52	1650.16	SLV 8	2.28	Si
ini.	2	-2275	-1033.38	1650.16	SLV 9	1.6	Si
fin.	2	-1796	-147.41	1650.16	SLV 9	11.19	Si
ini.	2	614	-240.45	1650.16	SLV 7	6.86	Si
fin.	2	3522	723.52	1650.16	SLV 7	2.28	Si
ini.	2	-2274	-929.89	1650.16	SLV 12	1.77	Si
fin.	2	4371	1146.46	1650.16	SLV 12	1.44	Si

Verifiche a taglio delle travi in muratura secondo §C8.7.1.3.1 in combinazioni sismiche

Sezione	γM	N	M	V	Vt	Vp	Vt fess. diag.	Vt,lim	Comb.	c.s.	Verifica
ini.	2	-5643	-1801.5	10025			3239	1114	SLV 13	0.11	No
fin.	2	1354	798.87	2643			1253	0	SLV 13	0	No
ini.	2	-5643	-1801.5	10025			3239	1114	SLV 14	0.11	No
fin.	2	1354	798.87	2643			1253	0	SLV 14	0	No
ini.	2	3982	527.67	-971			1253	0	SLV 3	0	No
fin.	2	373	-222.77	-3578			1253	394	SLV 3	0.11	No
ini.	2	614	-240.45	1977			1253	334	SLV 7	0.17	No
fin.	2	3522	723.52	544			1253	0	SLV 7	0	No
ini.	2	3982	496.63	-377			1253	0	SLV 1	0	No
fin.	2	-1477	-610.93	-4861			1773	699	SLV 1	0.14	No
ini.	2	-2274	-929.89	5098			2053	795	SLV 11	0.16	No
fin.	2	4371	1146.46	2796			1253	0	SLV 11	0	No
ini.	2	3982	496.63	-377			1253	0	SLV 2	0	No
fin.	2	-1477	-610.93	-4861			1773	699	SLV 2	0.14	No
ini.	2	614	-240.45	1977			1253	334	SLV 8	0.17	No
fin.	2	3522	723.52	544			1253	0	SLV 8	0	No
ini.	2	3982	527.67	-971			1253	0	SLV 4	0	No
fin.	2	373	-222.77	-3578			1253	394	SLV 4	0.11	No
ini.	2	-2274	-929.89	5098			2053	795	SLV 12	0.16	No
fin.	2	4371	1146.46	2796			1253	0	SLV 12	0	No

Tabella dei coefficienti di sicurezza minimi

Stato limite	Coeff.s.	Comb.	Verifica
PF_SLV	0.916	SLV 13	No
V_SLV	0	SLV 1	No

Stato limite	Coeff.s.	Comb.	Verifica
PF_SLU	1.131	SLU 83	Si
V_SLU	0	SLU 10	No

Trave di accoppiamento 60

Verifiche condotte secondo D.M. 17-01-18 (N.T.C.)

Dati geometrici

X ini.	Y ini.	Z ini.inf.	Z ini.sup.	H ini.	X fin.	Y fin.	Z fin.inf.	Z fin.sup	H fin.	Luce	Spessore	R. Trazione
-5.454	-3.248	0.67	2.67	2	-5.954	-3.248	0.67	2.67	2	0.5	0.28	30000

Caratteristiche del materiale

(Circolare 7 21-01-19 C8.5.I) Muratura in mattoni pieni e malta di calce LC2_Corti

fb_	fhk	fvk0	fhmedio	τ0	fv0	μ	ϕ	fvk,lim	E	G	FC
120000			172500	9000	20000	0.577	0.767	6500	320000000	128000000	1.2

Verifiche a pressoflessione delle travi in muratura in combinazioni non sismiche

Sezione	γM	N	M	Mu	Comb.	c.s.	Verifica
ini.	3	45	2290.75	5682.35	SLU 74	2.48	Si
fin.	3	-1084	-495.91	5682.35	SLU 74	11.46	Si
ini.	3	34	2317.51	5682.35	SLU 77	2.45	Si
fin.	3	-1119	-511.49	5682.35	SLU 77	11.11	Si
ini.	3	40	2301.33	5682.35	SLU 79	2.47	Si
fin.	3	-1103	-502.29	5682.35	SLU 79	11.31	Si
ini.	3	34	2155.14	5682.35	SLU 62	2.64	Si
fin.	3	-1032	-462.51	5682.35	SLU 62	12.29	Si
ini.	3	-81	2075.32	5682.35	SLU 69	2.74	Si
fin.	3	-1149	-515.83	5682.35	SLU 69	11.02	Si
ini.	3	-26	2078.1	5682.35	SLU 58	2.73	Si
fin.	3	-1080	-479.95	5682.35	SLU 58	11.84	Si
ini.	3	-32	2094.28	5682.35	SLU 56	2.71	Si
fin.	3	-1096	-489.15	5682.35	SLU 56	11.62	Si
ini.	3	112	2351.61	5682.35	SLU 81	2.42	Si
fin.	3	-1021	-469.28	5682.35	SLU 81	12.11	Si
ini.	3	100	2378.37	5682.35	SLU 83	2.39	Si
fin.	3	-1055	-484.86	5682.35	SLU 83	11.72	Si
ini.	3	46	2128.38	5682.35	SLU 60	2.67	Si
fin.	3	-998	-446.93	5682.35	SLU 60	12.71	Si

Verifiche a taglio delle travi in muratura secondo §C8.7.1.3.1 in combinazioni non sismiche

Sezione	γM	N	M	V	Vt	Vp	Vt fess. diag.	Vt,lim	Comb.	c.s.	Verifica
ini.	3	40	2301.33	-8319			2157	803	SLU 79	0.1	No
fin.	3	-1103	-502.29	2957			2598	1024	SLU 79	0.35	No
ini.	3	34	2317.51	-8386			2157	804	SLU 77	0.1	No
fin.	3	-1119	-511.49	2970			2604	1026	SLU 77	0.35	No
ini.	3	-47	2043.17	-8369			2176	822	SLU 84	0.1	No
fin.	3	-278	287.33	3490			2268	870	SLU 84	0.25	No
ini.	3	45	2290.75	-8280			2157	802	SLU 74	0.1	No
fin.	3	-1084	-495.91	2926			2590	1020	SLU 74	0.35	No
ini.	3	-36	2016.41	-8264			2171	819	SLU 82	0.1	No
fin.	3	-243	302.9	3446			2254	863	SLU 82	0.25	No
ini.	3	-114	1982.32	-8215			2202	836	SLU 78	0.1	No
fin.	3	-342	260.69	3437			2293	883	SLU 78	0.26	No
ini.	3	-102	1955.56	-8109			2198	834	SLU 75	0.1	No
fin.	3	-307	276.27	3393			2280	876	SLU 75	0.26	No
ini.	3	-108	1966.14	-8148			2200	835	SLU 80	0.1	No
fin.	3	-326	269.89	3424			2287	880	SLU 80	0.26	No
ini.	3	112	2351.61	-8434			2157	787	SLU 81	0.09	No
fin.	3	-1021	-469.28	2979			2565	1009	SLU 81	0.34	No
ini.	3	100	2378.37	-8540			2157	789	SLU 83	0.09	No
fin.	3	-1055	-484.86	3023			2579	1015	SLU 83	0.34	No

Verifiche a pressoflessione delle travi in muratura in combinazioni sismiche

Sezione	γM	N	M	Mu	Comb.	c.s.	Verifica
ini.	2	6179	2319.89	8523.53	SLV 10	3.67	Si
fin.	2	6244	4863.72	8523.53	SLV 10	1.75	Si
ini.	2	6179	2319.89	8523.53	SLV 9	3.67	Si
fin.	2	6244	4863.72	8523.53	SLV 9	1.75	Si
ini.	2	-5459	-489.34	8523.53	SLV 12	17.42	Si
fin.	2	-9435	-6025.3	8523.53	SLV 12	1.41	Si
ini.	2	-6221	805.95	8523.53	SLV 7	10.58	Si
fin.	2	-7854	-5582.91	8523.53	SLV 7	1.53	Si
ini.	2	-5459	-489.34	8523.53	SLV 11	17.42	Si
fin.	2	-9435	-6025.3	8523.53	SLV 11	1.41	Si
ini.	2	453	4143.13	8523.53	SLV 2	2.06	Si
fin.	2	4183	2011.07	8523.53	SLV 2	4.24	Si
ini.	2	-6221	805.95	8523.53	SLV 8	10.58	Si
fin.	2	-7854	-5582.91	8523.53	SLV 8	1.53	Si
ini.	2	453	4143.13	8523.53	SLV 1	2.06	Si
fin.	2	4183	2011.07	8523.53	SLV 1	4.24	Si
ini.	2	5416	3615.18	8523.53	SLV 6	2.36	Si
fin.	2	7826	5306.11	8523.53	SLV 6	1.61	Si
ini.	2	5416	3615.18	8523.53	SLV 5	2.36	Si
fin.	2	7826	5306.11	8523.53	SLV 5	1.61	Si

Verifiche a taglio delle travi in muratura secondo §C8.7.1.3.1 in combinazioni sismiche

Sezione	γM	N	M	V	Vt	Vp	Vt fess. diag.	Vt,lim	Comb.	c.s.	Verifica
ini.	2	2996	-174.51	4889			3235	0	SLV 14	0	No
fin.	2	-1089	536.44	13732			3671	1435	SLV 14	0.1	No
ini.	2	5416	3615.18	-12508			3235	0	SLV 6	0	No
fin.	2	7826	5306.11	1276			3235	0	SLV 6	0	No
ini.	2	6179	2319.89	-5553			3235	0	SLV 10	0	No
fin.	2	6244	4863.72	7840			3235	0	SLV 10	0	No
ini.	2	6179	2319.89	-5553			3235	0	SLV 9	0	No
fin.	2	6244	4863.72	7840			3235	0	SLV 9	0	No
ini.	2	5416	3615.18	-12508			3235	0	SLV 5	0	No
fin.	2	7826	5306.11	1276			3235	0	SLV 5	0	No
ini.	2	453	4143.13	-18294			3235	1115	SLV 2	0.06	No
fin.	2	4183	2011.07	-8147			3235	0	SLV 2	0	No
ini.	2	-3038	3300.36	-16299			4450	1758	SLV 3	0.11	No
fin.	2	-520	-1255.64	-9660			3443	1326	SLV 3	0.14	No
ini.	2	453	4143.13	-18294			3235	1115	SLV 1	0.06	No
fin.	2	4183	2011.07	-8147			3235	0	SLV 1	0	No
ini.	2	-3038	3300.36	-16299			4450	1758	SLV 4	0.11	No
fin.	2	-520	-1255.64	-9660			3443	1326	SLV 4	0.14	No
ini.	2	2996	-174.51	4889			3235	0	SLV 13	0	No
fin.	2	-1089	536.44	13732			3671	1435	SLV 13	0.1	No

Tabella dei coefficienti di sicurezza minimi

Stato limite	Coeff.s.	Comb.	Verifica
PF_SLV	1.415	SLV 11	Si
V_SLV	0	SLV 1	No
PF_SLU	2.389	SLU 83	Si
V_SLU	0.092	SLU 83	No

Trave di accoppiamento 61

Verifiche condotte secondo D.M. 17-01-18 (N.T.C.)

Dati geometrici

X ini.	Y ini.	Z ini.inf.	Z ini.sup.	H ini.	X fin.	Y fin.	Z fin.inf.	Z fin.sup	H fin.	Luce	Spessore	R. Trazione
-5.454	-3.248	3.47	4.35	0.88	-5.954	-3.248	3.47	4.35	0.88	0.5	0.28	30000

Caratteristiche del materiale

(Circolare 7 21-01-19 C8.5.I) Muratura in mattoni pieni e malta di calce LC2_Corti

fb_	fhk	fvk0	fhmedio	τ0	fv0	μ	ϕ	fvk,lim	E	G	FC
120000			172500	9000	20000	0.577	0.767	6500	320000000	128000000	1.2

Verifiche a pressoflessione delle travi in muratura in combinazioni non sismiche

Sezione	γM	N	M	Mu	Comb.	c.s.	Verifica
ini.	3	-242	218.54	1100.1	SLU 81	5.03	Si
fin.	3	-905	-662.16	1100.1	SLU 81	1.66	Si
ini.	3	-183	219.02	1100.1	SLU 77	5.02	Si
fin.	3	-834	-650.56	1100.1	SLU 77	1.69	Si
ini.	3	-234	222	1100.1	SLU 83	4.96	Si
fin.	3	-905	-669.91	1100.1	SLU 83	1.64	Si
ini.	3	-195	188.45	1100.1	SLU 58	5.84	Si
fin.	3	-775	-586.57	1100.1	SLU 58	1.88	Si
ini.	3	-180	192.07	1100.1	SLU 56	5.73	Si
fin.	3	-765	-590.09	1100.1	SLU 56	1.86	Si
ini.	3	-192	215.55	1100.1	SLU 74	5.1	Si
fin.	3	-835	-642.81	1100.1	SLU 74	1.71	Si
ini.	3	-239	191.59	1100.1	SLU 60	5.74	Si
fin.	3	-836	-601.68	1100.1	SLU 60	1.83	Si
ini.	3	-377	58.97	1100.1	SLU 84	18.65	Si
fin.	3	-830	-593.4	1100.1	SLU 84	1.85	Si
ini.	3	-198	215.4	1100.1	SLU 79	5.11	Si
fin.	3	-844	-647.05	1100.1	SLU 79	1.7	Si
ini.	3	-231	195.05	1100.1	SLU 62	5.64	Si
fin.	3	-836	-609.43	1100.1	SLU 62	1.81	Si

Verifiche a taglio delle travi in muratura secondo §C8.7.1.3.1 in combinazioni non sismiche

Sezione	γM	N	M	V	Vt	Vp	Vt fess. diag.	Vt,lim	Comb.	c.s.	Verifica
ini.	3	-234	222	-1582			1042	405	SLU 83	0.26	No
fin.	3	-905	-669.91	-6866			1311	518	SLU 83	0.08	No
ini.	3	-231	195.05	-1412			1041	404	SLU 62	0.29	No
fin.	3	-836	-609.43	-6217			1283	507	SLU 62	0.08	No
ini.	3	-242	218.54	-1561			1046	406	SLU 81	0.26	No
fin.	3	-905	-662.16	-6774			1311	518	SLU 81	0.08	No
ini.	3	-128	192.05	-1325			1000	384	SLU 66	0.29	No
fin.	3	-691	-571.38	-5908			1225	485	SLU 66	0.08	No
ini.	3	-180	192.07	-1366			1021	394	SLU 56	0.29	No
fin.	3	-765	-590.09	-6059			1255	496	SLU 56	0.08	No
ini.	3	-198	215.4	-1522			1028	398	SLU 79	0.26	No
fin.	3	-844	-647.05	-6654			1286	508	SLU 79	0.08	No
ini.	3	-192	215.55	-1515			1026	397	SLU 74	0.26	No
fin.	3	-835	-642.81	-6616			1283	507	SLU 74	0.08	No
ini.	3	-133	191.9	-1332			1002	385	SLU 71	0.29	No
fin.	3	-701	-575.62	-5946			1229	486	SLU 71	0.08	No
ini.	3	-119	195.52	-1346			997	382	SLU 69	0.28	No
fin.	3	-691	-579.13	-5999			1225	485	SLU 69	0.08	No
ini.	3	-183	219.02	-1536			1022	395	SLU 77	0.26	No

Sezione	γM	N	M	V	Vt	Vp	Vt fess. diag.	Vt,lim	Comb.	c.s.	Verifica
fin.	3	-834	-650.56	-6707			1283	507	SLU 77	0.08	No

Verifiche a pressoflessione delle travi in muratura in combinazioni sismiche

Sezione	γM	N	M	Mu	Comb.	c.s.	Verifica
ini.	2	1805	1072.98	1650.16	SLV 7	1.54	Si
fin.	2	67	-454.2	1650.16	SLV 7	3.63	Si
ini.	2	-4971	-1293.92	1650.16	SLV 13	1.28	Si
fin.	2	-4382	-676.98	1650.16	SLV 13	2.44	Si
ini.	2	4704	1580.07	1650.16	SLV 4	1.04	Si
fin.	2	3252	-198.98	1650.16	SLV 4	8.29	Si
ini.	2	4383	1251.18	1650.16	SLV 2	1.32	Si
fin.	2	3590	-141	1650.16	SLV 2	11.7	Si
ini.	2	4383	1251.18	1650.16	SLV 1	1.32	Si
fin.	2	3590	-141	1650.16	SLV 1	11.7	Si
ini.	2	1805	1072.98	1650.16	SLV 8	1.54	Si
fin.	2	67	-454.2	1650.16	SLV 8	3.63	Si
ini.	2	-4649	-965.03	1650.16	SLV 16	1.71	Si
fin.	2	-4720	-734.95	1650.16	SLV 16	2.25	Si
ini.	2	-4971	-1293.92	1650.16	SLV 14	1.28	Si
fin.	2	-4382	-676.98	1650.16	SLV 14	2.44	Si
ini.	2	4704	1580.07	1650.16	SLV 3	1.04	Si
fin.	2	3252	-198.98	1650.16	SLV 3	8.29	Si
ini.	2	-4649	-965.03	1650.16	SLV 15	1.71	Si
fin.	2	-4720	-734.95	1650.16	SLV 15	2.25	Si

Verifiche a taglio delle travi in muratura secondo §C8.7.1.3.1 in combinazioni sismiche

Sezione	γM	N	M	V	Vt	Vp	Vt fess. diag.	Vt,lim	Comb.	c.s.	Verifica
ini.	2	-2072	-786.83	1180			2252	877	SLV 10	0.74	No
fin.	2	-1197	-421.75	-4875			1902	752	SLV 10	0.15	No
ini.	2	4383	1251.18	-3329			1423	0	SLV 1	0	No
fin.	2	3590	-141	-7644			1423	0	SLV 1	0	No
ini.	2	1805	1072.98	-3198			1423	0	SLV 7	0	No
fin.	2	67	-454.2	-4111			1423	521	SLV 7	0.13	No
ini.	2	4704	1580.07	-4151			1423	0	SLV 3	0	No
fin.	2	3252	-198.98	-6913			1423	0	SLV 3	0	No
ini.	2	734	-23.3	-458			1423	340	SLV 5	0.74	No
fin.	2	1195	-260.96	-6546			1423	93	SLV 5	0.01	No
ini.	2	1805	1072.98	-3198			1423	0	SLV 8	0	No
fin.	2	67	-454.2	-4111			1423	521	SLV 8	0.13	No
ini.	2	4704	1580.07	-4151			1423	0	SLV 4	0	No
fin.	2	3252	-198.98	-6913			1423	0	SLV 4	0	No
ini.	2	4383	1251.18	-3329			1423	0	SLV 2	0	No
fin.	2	3590	-141	-7644			1423	0	SLV 2	0	No
ini.	2	-2072	-786.83	1180			2252	877	SLV 9	0.74	No
fin.	2	-1197	-421.75	-4875			1902	752	SLV 9	0.15	No
ini.	2	734	-23.3	-458			1423	340	SLV 6	0.74	No
fin.	2	1195	-260.96	-6546			1423	93	SLV 6	0.01	No

Tabella dei coefficienti di sicurezza minimi

Stato limite	Coeff.s.	Comb.	Verifica
PF_SLV	1.044	SLV 3	Si
V_SLV	0	SLV 1	No
PF_SLU	1.642	SLU 83	Si
V_SLU	0.075	SLU 83	No

Trave di accoppiamento 62

Verifiche condotte secondo D.M. 17-01-18 (N.T.C.)

Dati geometrici

X ini.	Y ini.	Z ini.inf.	Z ini.sup.	H ini.	X fin.	Y fin.	Z fin.inf.	Z fin.sup	H fin.	Luce	Spessore	R. Trazione
-2.223	-3.248	0.67	1.57	0.9	-3.223	-3.248	0.67	1.57	0.9	1	0.28	30000

Caratteristiche del materiale

(Circolare 7 21-01-19 C8.5.I) Muratura in mattoni pieni e malta di calce LC2_Corti

fb_	fhk	fvk0	fhmedio	τ0	fv0	μ	ϕ	fvk,lim	E	G	FC
120000			172500	9000	20000	0.577	0.767	6500	320000000	128000000	1.2

Verifiche a pressoflessione delle travi in muratura in combinazioni non sismiche

Sezione	γM	N	M	Mu	Comb.	c.s.	Verifica
ini.	3	3878	-393.61	1150.68	SLU 62	2.92	Si
fin.	3	3895	-294.33	1150.68	SLU 62	3.91	Si
ini.	3	3820	-388.36	1150.68	SLU 60	2.96	Si
fin.	3	3837	-291.3	1150.68	SLU 60	3.95	Si
ini.	3	3707	-395.2	1150.68	SLU 41	2.91	Si
fin.	3	3709	-277.83	1150.68	SLU 41	4.14	Si
ini.	3	4171	-423.65	1150.68	SLU 79	2.72	Si
fin.	3	4189	-316.43	1150.68	SLU 79	3.64	Si
ini.	3	4144	-419.74	1150.68	SLU 74	2.74	Si
fin.	3	4165	-316.64	1150.68	SLU 74	3.63	Si
ini.	3	4258	-442.6	1150.68	SLU 81	2.6	Si
fin.	3	4270	-323.47	1150.68	SLU 81	3.56	Si
ini.	3	4202	-424.99	1150.68	SLU 77	2.71	Si
fin.	3	4223	-319.66	1150.68	SLU 77	3.6	Si
ini.	3	3593	-372.33	1150.68	SLU 35	3.09	Si
fin.	3	3603	-271	1150.68	SLU 35	4.25	Si
ini.	3	3648	-389.94	1150.68	SLU 39	2.95	Si

Sezione	γM	N	M	Mu	Comb.	c.s.	Verifica
fin.	3	3651	-274.8	1150.68	SLU 39	4.19	Si
ini.	3	4316	-447.85	1150.68	SLU 83	2.57	Si
fin.	3	4328	-326.49	1150.68	SLU 83	3.52	Si

Verifiche a taglio delle travi in muratura secondo §C8.7.1.3.1 in combinazioni non sismiche

Sezione	γM	N	M	V	Vt	Vp	Vt fess. diag.	Vt,lim	Comb.	c.s.	Verifica
ini.	3	3289	-302.02	-512			873	0	SLU 48	0	No
fin.	3	3329	-256.94	600			873	0	SLU 48	0	No
ini.	3	3258	-300.68	-501			873	0	SLU 50	0	No
fin.	3	3295	-253.7	594			873	0	SLU 50	0	No
ini.	3	3648	-389.94	-405			873	0	SLU 39	0	No
fin.	3	3651	-274.8	662			873	0	SLU 39	0	No
ini.	3	3562	-370.99	-428			873	0	SLU 37	0	No
fin.	3	3570	-267.76	657			873	0	SLU 37	0	No
ini.	3	3707	-395.2	-417			873	0	SLU 41	0	No
fin.	3	3709	-277.83	680			873	0	SLU 41	0	No
ini.	3	4316	-447.85	-519			873	0	SLU 83	0	No
fin.	3	4328	-326.49	788			873	0	SLU 83	0	No
ini.	3	3141	-290.18	-477			873	0	SLU 43	0	No
fin.	3	3179	-247.65	559			873	0	SLU 43	0	No
ini.	3	3231	-296.77	-500			873	0	SLU 45	0	No
fin.	3	3271	-253.92	582			873	0	SLU 45	0	No
ini.	3	3706	-365.5	-502			873	0	SLU 53	0	No
fin.	3	3731	-284.47	675			873	0	SLU 53	0	No
ini.	3	2531	-237.52	-374			873	0	SLU 1	0	No
fin.	3	2560	-198.98	451			873	0	SLU 1	0	No

Verifiche a pressoflessione delle travi in muratura in combinazioni sismiche

Sezione	γM	N	M	Mu	Comb.	c.s.	Verifica
ini.	2	12983	-376.49	1726.01	SLV 8	4.58	Si
fin.	2	15305	-1809.38	1726.01	SLV 8	0.95	No
ini.	2	2449	-2310.5	1726.01	SLV 14	0.75	No
fin.	2	-2369	2022.98	1726.01	SLV 14	0.85	No
ini.	2	-3515	2236.75	1726.01	SLV 1	0.77	No
fin.	2	790	-1849.86	1726.01	SLV 1	0.93	No
ini.	2	9100	-2782.05	1726.01	SLV 16	0.62	No
fin.	2	4841	1416.05	1726.01	SLV 16	1.22	Si
ini.	2	12983	-376.49	1726.01	SLV 7	4.58	Si
fin.	2	15305	-1809.38	1726.01	SLV 7	0.95	No
ini.	2	-3515	2236.75	1726.01	SLV 2	0.77	No
fin.	2	790	-1849.86	1726.01	SLV 2	0.93	No
ini.	2	3136	1765.19	1726.01	SLV 4	0.98	No
fin.	2	7999	-2456.79	1726.01	SLV 4	0.7	No
ini.	2	9100	-2782.05	1726.01	SLV 15	0.62	No
fin.	2	4841	1416.05	1726.01	SLV 15	1.22	Si
ini.	2	3136	1765.19	1726.01	SLV 3	0.98	No
fin.	2	7999	-2456.79	1726.01	SLV 3	0.7	No
ini.	2	2449	-2310.5	1726.01	SLV 13	0.75	No
fin.	2	-2369	2022.98	1726.01	SLV 13	0.85	No

Verifiche a taglio delle travi in muratura secondo §C8.7.1.3.1 in combinazioni sismiche

Sezione	γM	N	M	V	Vt	Vp	Vt fess. diag.	Vt,lim	Comb.	c.s.	Verifica
ini.	2	9100	-2782.05	5856			1310	0	SLV 16	0	No
fin.	2	4841	1416.05	6979			1310	0	SLV 16	0	No
ini.	2	2449	-2310.5	5550			1310	0	SLV 13	0	No
fin.	2	-2369	2022.98	7434			2163	837	SLV 13	0.11	No
ini.	2	3136	1765.19	-6316			1310	0	SLV 4	0	No
fin.	2	7999	-2456.79	-6435			1310	0	SLV 4	0	No
ini.	2	3136	1765.19	-6316			1310	0	SLV 3	0	No
fin.	2	7999	-2456.79	-6435			1310	0	SLV 3	0	No
ini.	2	14772	-1740.66	1953			1310	0	SLV 12	0	No
fin.	2	14358	-647.53	1754			1310	0	SLV 12	0	No
ini.	2	14772	-1740.66	1953			1310	0	SLV 11	0	No
fin.	2	14358	-647.53	1754			1310	0	SLV 11	0	No
ini.	2	2449	-2310.5	5550			1310	0	SLV 14	0	No
fin.	2	-2369	2022.98	7434			2163	837	SLV 14	0.11	No
ini.	2	12983	-376.49	-1699			1310	0	SLV 8	0	No
fin.	2	15305	-1809.38	-2270			1310	0	SLV 8	0	No
ini.	2	12983	-376.49	-1699			1310	0	SLV 7	0	No
fin.	2	15305	-1809.38	-2270			1310	0	SLV 7	0	No
ini.	2	9100	-2782.05	5856			1310	0	SLV 15	0	No
fin.	2	4841	1416.05	6979			1310	0	SLV 15	0	No

Tabella dei coefficienti di sicurezza minimi

Stato limite	Coeff.s.	Comb.	Verifica
PF_SLV	0.62	SLV 15	No
V_SLV	0	SLV 3	No
PF_SLU	2.569	SLU 83	Si
V_SLU	0	SLU 1	No

Trave di accoppiamento 63

Verifiche condotte secondo D.M. 17-01-18 (N.T.C.)

Dati geometrici

X ini.	Y ini.	Z ini.inf.	Z ini.sup.	H ini.	X fin.	Y fin.	Z fin.inf.	Z fin.sup	H fin.	Luce	Spessore	R. Trazione
-2.223	-3.248	3.47	4.35	0.88	-3.223	-3.248	3.47	4.35	0.88	1	0.28	30000

Caratteristiche del materiale

(Circolare 7 21-01-19 C8.5.I) Muratura in mattoni pieni e malta di calce LC2_Corti

fb_	fhk	fvk0	fhmedio	τ0	fv0	μ	ϕ	fvk,lim	E	G	FC
120000			172500	9000	20000	0.577	0.767	6500	320000000	128000000	1.2

Verifiche a pressoflessione delle travi in muratura in combinazioni non sismiche

Sezione	γM	N	M	Mu	Comb.	c.s.	Verifica
ini.	3	133	-161.42	1100.1	SLU 65	6.82	Si
fin.	3	-192	-362.49	1100.1	SLU 65	3.03	Si
ini.	3	126	-168.4	1100.1	SLU 52	6.53	Si
fin.	3	-183	-358.1	1100.1	SLU 52	3.07	Si
ini.	3	144	-191.4	1100.1	SLU 73	5.75	Si
fin.	3	-148	-373.64	1100.1	SLU 73	2.94	Si
ini.	3	128	-171.55	1100.1	SLU 55	6.41	Si
fin.	3	-179	-361.56	1100.1	SLU 55	3.04	Si
ini.	3	135	-164.57	1100.1	SLU 68	6.68	Si
fin.	3	-188	-365.94	1100.1	SLU 68	3.01	Si
ini.	3	116	-141.57	1100.1	SLU 47	7.77	Si
fin.	3	-223	-350.41	1100.1	SLU 47	3.14	Si
ini.	3	149	-173.69	1100.1	SLU 34	6.33	Si
fin.	3	-90	-332.33	1100.1	SLU 34	3.31	Si
ini.	3	146	-194.55	1100.1	SLU 76	5.65	Si
fin.	3	-144	-377.09	1100.1	SLU 76	2.92	Si
ini.	3	107	-189.99	1100.1	SLU 78	5.79	Si
fin.	3	-125	-329.09	1100.1	SLU 78	3.34	Si
ini.	3	115	-138.42	1100.1	SLU 44	7.95	Si
fin.	3	-227	-346.96	1100.1	SLU 44	3.17	Si

Verifiche a taglio delle travi in muratura secondo §C8.7.1.3.1 in combinazioni non sismiche

Sezione	γM	N	M	V	Vt	Vp	Vt fess. diag.	Vt,lim	Comb.	c.s.	Verifica
ini.	3	44	-185.69	2229			835	306	SLU 83	0.14	No
fin.	3	-93	-246.63	-3110			868	332	SLU 83	0.11	No
ini.	3	107	-195.57	2259			835	293	SLU 82	0.13	No
fin.	3	-116	-324.32	-3415			876	336	SLU 82	0.1	No
ini.	3	105	-189.02	2204			835	293	SLU 80	0.13	No
fin.	3	-127	-326.45	-3372			880	338	SLU 80	0.1	No
ini.	3	107	-189.99	2218			835	293	SLU 78	0.13	No
fin.	3	-125	-329.09	-3396			879	337	SLU 78	0.1	No
ini.	3	135	-164.57	1944			835	287	SLU 68	0.15	No
fin.	3	-188	-365.94	-3277			901	348	SLU 68	0.11	No
ini.	3	106	-186.84	2188			835	293	SLU 75	0.13	No
fin.	3	-129	-325.64	-3356			880	338	SLU 75	0.1	No
ini.	3	128	-171.55	1981			835	289	SLU 55	0.15	No
fin.	3	-179	-361.56	-3283			898	347	SLU 55	0.11	No
ini.	3	146	-194.55	2214			835	285	SLU 76	0.13	No
fin.	3	-144	-377.09	-3562			886	341	SLU 76	0.1	No
ini.	3	108	-198.72	2289			835	293	SLU 84	0.13	No
fin.	3	-112	-327.78	-3455			875	335	SLU 84	0.1	No
ini.	3	144	-191.4	2184			835	285	SLU 73	0.13	No
fin.	3	-148	-373.64	-3523			887	341	SLU 73	0.1	No

Verifiche a pressoflessione delle travi in muratura in combinazioni sismiche

Sezione	γM	N	M	Mu	Comb.	c.s.	Verifica
ini.	2	-546	133.58	1650.16	SLV 6	12.35	Si
fin.	2	-2044	-981.54	1650.16	SLV 6	1.68	Si
ini.	2	-2662	-1786.5	1650.16	SLV 14	0.92	No
fin.	2	2227	978.55	1650.16	SLV 14	1.69	Si
ini.	2	-1908	-1644.42	1650.16	SLV 15	1	Si
fin.	2	2901	1232.32	1650.16	SLV 15	1.34	Si
ini.	2	1948	1422.47	1650.16	SLV 2	1.16	Si
fin.	2	-3136	-1581.48	1650.16	SLV 2	1.04	Si
ini.	2	-546	133.58	1650.16	SLV 5	12.35	Si
fin.	2	-2044	-981.54	1650.16	SLV 5	1.68	Si
ini.	2	-1908	-1644.42	1650.16	SLV 16	1	Si
fin.	2	2901	1232.32	1650.16	SLV 16	1.34	Si
ini.	2	2702	1564.55	1650.16	SLV 4	1.05	Si
fin.	2	-2463	-1327.71	1650.16	SLV 4	1.24	Si
ini.	2	1948	1422.47	1650.16	SLV 1	1.16	Si
fin.	2	-3136	-1581.48	1650.16	SLV 1	1.04	Si
ini.	2	-2662	-1786.5	1650.16	SLV 13	0.92	No
fin.	2	2227	978.55	1650.16	SLV 13	1.69	Si
ini.	2	2702	1564.55	1650.16	SLV 3	1.05	Si
fin.	2	-2463	-1327.71	1650.16	SLV 3	1.24	Si

Verifiche a taglio delle travi in muratura secondo §C8.7.1.3.1 in combinazioni sismiche

Sezione	γM	N	M	V	Vt	Vp	Vt fess. diag.	Vt,lim	Comb.	c.s.	Verifica
ini.	2	585	-355.53	2099			1253	341	SLV 12	0.16	No
fin.	2	1809	632.38	932			1253	0	SLV 12	0	No
ini.	2	2702	1564.55	-4230			1253	0	SLV 3	0	No
fin.	2	-2463	-1327.71	-6409			2119	816	SLV 3	0.13	No
ini.	2	1969	607.16	-1123			1253	0	SLV 7	0	No
fin.	2	200	-135.63	-1953			1253	431	SLV 7	0.22	No
ini.	2	585	-355.53	2099			1253	341	SLV 11	0.16	No
fin.	2	1809	632.38	932			1253	0	SLV 11	0	No
ini.	2	1948	1422.47	-3670			1253	0	SLV 1	0	No
fin.	2	-3136	-1581.48	-7344			2356	888	SLV 1	0.12	No
ini.	2	1969	607.16	-1123			1253	0	SLV 8	0	No
fin.	2	200	-135.63	-1953			1253	431	SLV 8	0.22	No
ini.	2	1948	1422.47	-3670			1253	0	SLV 2	0	No
fin.	2	-3136	-1581.48	-7344			2356	888	SLV 2	0.12	No

Sezione	γM	N	M	V	Vt	Vp	Vt fess. diag.	Vt,lim	Comb.	c.s.	Verifica
ini.	2	2702	1564.55	-4230			1253	0	SLV 4	0	No
fin.	2	-2463	-1327.71	-6409			2119	816	SLV 4	0.13	No
ini.	2	-2662	-1786.5	7071			2190	838	SLV 14	0.12	No
fin.	2	2227	978.55	2272			1253	0	SLV 14	0	No
ini.	2	-2662	-1786.5	7071			2190	838	SLV 13	0.12	No
fin.	2	2227	978.55	2272			1253	0	SLV 13	0	No

Tabella dei coefficienti di sicurezza minimi

Stato limite	Coeff.s.	Comb.	Verifica
PF_SLV	0.924	SLV 13	No
V_SLV	0	SLV 1	No
PF_SLU	2.917	SLU 76	Si
V_SLU	0.096	SLU 76	No

Trave di accoppiamento 64

Verifiche condotte secondo D.M. 17-01-18 (N.T.C.)

Dati geometrici

X ini.	Y ini.	Z ini.inf.	Z ini.sup.	H ini.	X fin.	Y fin.	Z fin.inf.	Z fin.sup	H fin.	Luce	Spessore	R. Trazione
-1.889	5.83	0.67	1.57	0.9	-2.889	5.83	0.67	1.57	0.9	1	0.28	30000

Caratteristiche del materiale

(Circolare 7 21-01-19 C8.5.I) Muratura in mattoni pieni e malta di calce LC2_Corti

fb_	fhk	fvk0	fhmedio	τ0	fv0	μ	ϕ	fvk,lim	E	G	FC
120000			172500	9000	20000	0.577	0.767	6500	320000000	128000000	1.2

Verifiche a pressoflessione delle travi in muratura in combinazioni non sismiche

Sezione	γM	N	M	Mu	Comb.	c.s.	Verifica
ini.	3	2085	174.73	1150.68	SLU 78	6.59	Si
fin.	3	-150	414.65	1150.68	SLU 78	2.78	Si
ini.	3	1988	184.76	1150.68	SLU 76	6.23	Si
fin.	3	-127	386.11	1150.68	SLU 76	2.98	Si
ini.	3	2112	189.35	1150.68	SLU 84	6.08	Si
fin.	3	-110	400.4	1150.68	SLU 84	2.87	Si
ini.	3	2012	186.27	1150.68	SLU 75	6.18	Si
fin.	3	-113	386.62	1150.68	SLU 75	2.98	Si
ini.	3	2038	184.9	1150.68	SLU 74	6.22	Si
fin.	3	-95	385.85	1150.68	SLU 74	2.98	Si
ini.	3	1837	161.88	1150.68	SLU 70	7.11	Si
fin.	3	-162	380.11	1150.68	SLU 70	3.03	Si
ini.	3	2104	170.94	1150.68	SLU 79	6.73	Si
fin.	3	-133	412.85	1150.68	SLU 79	2.79	Si
ini.	3	2111	173.36	1150.68	SLU 77	6.64	Si
fin.	3	-132	413.88	1150.68	SLU 77	2.78	Si
ini.	3	2078	172.31	1150.68	SLU 80	6.68	Si
fin.	3	-151	413.62	1150.68	SLU 80	2.78	Si
ini.	3	2138	187.98	1150.68	SLU 83	6.12	Si
fin.	3	-91	399.63	1150.68	SLU 83	2.88	Si

Verifiche a taglio delle travi in muratura secondo §C8.7.1.3.1 in combinazioni non sismiche

Sezione	γM	N	M	V	Vt	Vp	Vt fess. diag.	Vt,lim	Comb.	c.s.	Verifica
ini.	3	1847	167.88	-2694			873	0	SLU 57	0	No
fin.	3	-142	372.07	1809			925	355	SLU 57	0.2	No
ini.	3	1775	179.41	-2678			873	0	SLU 54	0	No
fin.	3	-105	344.04	1691			911	349	SLU 54	0.21	No
ini.	3	1867	164.08	-2670			873	0	SLU 58	0	No
fin.	3	-125	370.27	1803			918	352	SLU 58	0.2	No
ini.	3	1801	178.04	-2685			873	0	SLU 53	0	No
fin.	3	-87	343.27	1697			905	345	SLU 53	0.2	No
ini.	3	1828	192.66	-2706			873	0	SLU 60	0	No
fin.	3	-46	329.01	1628			890	338	SLU 60	0.21	No
ini.	3	1197	135.89	-1955			873	0	SLU 1	0	No
fin.	3	-50	226.36	1145			892	338	SLU 1	0.3	No
ini.	3	1802	194.03	-2698			873	0	SLU 61	0	No
fin.	3	-64	329.78	1622			897	341	SLU 61	0.21	No
ini.	3	1751	177.9	-2642			873	0	SLU 55	0	No
fin.	3	-118	343.53	1676			916	351	SLU 55	0.21	No
ini.	3	1841	165.45	-2663			873	0	SLU 59	0	No
fin.	3	-143	371.04	1798			925	356	SLU 59	0.2	No
ini.	3	1873	166.51	-2701			873	0	SLU 56	0	No
fin.	3	-123	371.3	1815			918	352	SLU 56	0.19	No

Verifiche a pressoflessione delle travi in muratura in combinazioni sismiche

Sezione	γM	N	M	Mu	Comb.	c.s.	Verifica
ini.	2	6585	-1174.4	1726.01	SLV 15	1.47	Si
fin.	2	-1543	1838.87	1726.01	SLV 15	0.94	No
ini.	2	-5974	1267.43	1726.01	SLV 6	1.36	Si
fin.	2	-5802	132.27	1726.01	SLV 6	13.05	Si
ini.	2	-3915	1457.43	1726.01	SLV 1	1.18	Si
fin.	2	1444	-1342.07	1726.01	SLV 1	1.29	Si
ini.	2	-3915	1457.43	1726.01	SLV 2	1.18	Si
fin.	2	1444	-1342.07	1726.01	SLV 2	1.29	Si
ini.	2	2804	-692.33	1726.01	SLV 13	2.49	Si
fin.	2	-5631	2076.9	1726.01	SLV 13	0.83	No
ini.	2	-134	975.36	1726.01	SLV 4	1.77	Si
fin.	2	5533	-1580.11	1726.01	SLV 4	1.09	Si

Sezione	γM	N	M	Mu	Comb.	c.s.	Verifica
ini.	2	2804	-692.33	1726.01	SLV 14	2.49	Si
fin.	2	-5631	2076.9	1726.01	SLV 14	0.83	No
ini.	2	6585	-1174.4	1726.01	SLV 16	1.47	Si
fin.	2	-1543	1838.87	1726.01	SLV 16	0.94	No
ini.	2	-5974	1267.43	1726.01	SLV 5	1.36	Si
fin.	2	-5802	132.27	1726.01	SLV 5	13.05	Si
ini.	2	-134	975.36	1726.01	SLV 3	1.77	Si
fin.	2	5533	-1580.11	1726.01	SLV 3	1.09	Si

Verifiche a taglio delle travi in muratura secondo §C8.7.1.3.1 in combinazioni sismiche

Sezione	γM	N	M	V	Vt	Vp	Vt fess. diag.	Vt,lim	Comb.	c.s.	Verifica
ini.	2	8644	-984.39	-3879			1310	0	SLV 11	0	No
fin.	2	5704	364.52	4356			1310	0	SLV 11	0	No
ini.	2	6629	-339.47	-6306			1310	0	SLV 8	0	No
fin.	2	7826	-661.17	560			1310	0	SLV 8	0	No
ini.	2	-3915	1457.43	-5184			2719	999	SLV 2	0.19	No
fin.	2	1444	-1342.07	-5450			1310	0	SLV 2	0	No
ini.	2	-134	975.36	-7009			1358	519	SLV 3	0.07	No
fin.	2	5533	-1580.11	-4720			1310	0	SLV 3	0	No
ini.	2	8644	-984.39	-3879			1310	0	SLV 12	0	No
fin.	2	5704	364.52	4356			1310	0	SLV 12	0	No
ini.	2	2804	-692.33	2906			1310	0	SLV 14	0	No
fin.	2	-5631	2076.9	7203			3337	1153	SLV 14	0.16	No
ini.	2	-134	975.36	-7009			1358	519	SLV 4	0.07	No
fin.	2	5533	-1580.11	-4720			1310	0	SLV 4	0	No
ini.	2	2804	-692.33	2906			1310	0	SLV 13	0	No
fin.	2	-5631	2076.9	7203			3337	1153	SLV 13	0.16	No
ini.	2	6629	-339.47	-6306			1310	0	SLV 7	0	No
fin.	2	7826	-661.17	560			1310	0	SLV 7	0	No
ini.	2	-3915	1457.43	-5184			2719	999	SLV 1	0.19	No
fin.	2	1444	-1342.07	-5450			1310	0	SLV 1	0	No

Tabella dei coefficienti di sicurezza minimi

Stato limite	Coeff.s.	Comb.	Verifica
PF_SLV	0.831	SLV 13	No
V_SLV	0	SLV 1	No
PF_SLU	2.775	SLU 78	Si
V_SLU	0	SLU 1	No

Trave di accoppiamento 65

Verifiche condotte secondo D.M. 17-01-18 (N.T.C.)

Dati geometrici

X ini.	Y ini.	Z ini.inf.	Z ini.sup.	H ini.	X fin.	Y fin.	Z fin.inf.	Z fin.sup	H fin.	Luce	Spessore	R. Trazione
-1.889	5.83	3.47	4.35	0.88	-2.889	5.83	3.47	4.35	0.88	1	0.28	30000

Caratteristiche del materiale

(Circolare 7 21-01-19 C8.5.I) Muratura in mattoni pieni e malta di calce LC2_Corti

fb_	fhk	fvk0	fhmedio	τ0	fv0	μ	ϕ	fvk,lim	E	G	FC
120000			172500	9000	20000	0.577	0.767	6500	320000000	128000000	1.2

Verifiche a pressoflessione delle travi in muratura in combinazioni non sismiche

Sezione	γM	N	M	Mu	Comb.	c.s.	Verifica
ini.	3	-631	-577.99	1100.1	SLU 80	1.9	Si
fin.	3	519	16.94	1100.1	SLU 80	64.93	Si
ini.	3	-585	-546.57	1100.1	SLU 75	2.01	Si
fin.	3	461	-4.95	1100.1	SLU 75	222.12	Si
ini.	3	-613	-570.81	1100.1	SLU 84	1.93	Si
fin.	3	483	-1.41	1100.1	SLU 84	781.62	Si
ini.	3	-590	-546.44	1100.1	SLU 76	2.01	Si
fin.	3	461	-2.04	1100.1	SLU 76	538.7	Si
ini.	3	-575	-544.22	1100.1	SLU 74	2.02	Si
fin.	3	464	-5.54	1100.1	SLU 74	198.43	Si
ini.	3	-565	-537.71	1100.1	SLU 82	2.05	Si
fin.	3	428	-20.79	1100.1	SLU 82	52.93	Si
ini.	3	-603	-568.47	1100.1	SLU 83	1.94	Si
fin.	3	486	-2	1100.1	SLU 83	550.41	Si
ini.	3	-622	-577.33	1100.1	SLU 77	1.91	Si
fin.	3	519	13.83	1100.1	SLU 77	79.52	Si
ini.	3	-632	-579.67	1100.1	SLU 78	1.9	Si
fin.	3	516	14.43	1100.1	SLU 78	76.26	Si
ini.	3	-621	-575.64	1100.1	SLU 79	1.91	Si
fin.	3	522	16.35	1100.1	SLU 79	67.28	Si

Verifiche a taglio delle travi in muratura secondo §C8.7.1.3.1 in combinazioni non sismiche

Sezione	γM	N	M	V	Vt	Vp	Vt fess. diag.	Vt,lim	Comb.	c.s.	Verifica
ini.	3	-603	-568.47	3925			1047	414	SLU 83	0.11	No
fin.	3	486	-2	-2191			835	201	SLU 83	0.09	No
ini.	3	-631	-577.99	3911			1057	418	SLU 80	0.11	No
fin.	3	519	16.94	-2056			835	191	SLU 80	0.09	No
ini.	3	-565	-537.71	3782			1034	408	SLU 82	0.11	No
fin.	3	428	-20.79	-2224			835	218	SLU 82	0.1	No
ini.	3	-613	-570.81	3933			1051	415	SLU 84	0.11	No
fin.	3	483	-1.41	-2186			835	202	SLU 84	0.09	No
ini.	3	-632	-579.67	3927			1058	418	SLU 78	0.11	No
fin.	3	516	14.43	-2078			835	192	SLU 78	0.09	No

Sezione	γM	N	M	V	Vt	Vp	Vt fess. diag.	Vt,lim	Comb.	c.s.	Verifica
ini.	3	-621	-575.64	3904			1054	416	SLU 79	0.11	No
fin.	3	522	16.35	-2060			835	190	SLU 79	0.09	No
ini.	3	-575	-544.22	3770			1037	410	SLU 74	0.11	No
fin.	3	464	-5.54	-2121			835	207	SLU 74	0.1	No
ini.	3	-556	-535.37	3775			1031	407	SLU 81	0.11	No
fin.	3	431	-21.38	-2229			835	217	SLU 81	0.1	No
ini.	3	-585	-546.57	3777			1041	411	SLU 75	0.11	No
fin.	3	461	-4.95	-2116			835	208	SLU 75	0.1	No
ini.	3	-622	-577.33	3920			1054	417	SLU 77	0.11	No
fin.	3	519	13.83	-2083			835	191	SLU 77	0.09	No

Verifiche a pressoflessione delle travi in muratura in combinazioni sismiche

Sezione	γM	N	M	Mu	Comb.	c.s.	Verifica
ini.	2	-2688	-1590.99	1650.16	SLV 11	1.04	Si
fin.	2	2178	758.55	1650.16	SLV 11	2.18	Si
ini.	2	-2688	-1590.99	1650.16	SLV 12	1.04	Si
fin.	2	2178	758.55	1650.16	SLV 12	2.18	Si
ini.	2	-2039	-1586.48	1650.16	SLV 13	1.04	Si
fin.	2	2729	1112.81	1650.16	SLV 13	1.48	Si
ini.	2	2337	1369.65	1650.16	SLV 2	1.2	Si
fin.	2	-2809	-1394.87	1650.16	SLV 2	1.18	Si
ini.	2	1331	890.04	1650.16	SLV 4	1.85	Si
fin.	2	-2169	-1153.29	1650.16	SLV 4	1.43	Si
ini.	2	2337	1369.65	1650.16	SLV 1	1.2	Si
fin.	2	-2809	-1394.87	1650.16	SLV 1	1.18	Si
ini.	2	1331	890.04	1650.16	SLV 3	1.85	Si
fin.	2	-2169	-1153.29	1650.16	SLV 3	1.43	Si
ini.	2	-3045	-2066.09	1650.16	SLV 16	0.8	No
fin.	2	3370	1354.39	1650.16	SLV 16	1.22	Si
ini.	2	-3045	-2066.09	1650.16	SLV 15	0.8	No
fin.	2	3370	1354.39	1650.16	SLV 15	1.22	Si
ini.	2	-2039	-1586.48	1650.16	SLV 14	1.04	Si
fin.	2	2729	1112.81	1650.16	SLV 14	1.48	Si

Verifiche a taglio delle travi in muratura secondo §C8.7.1.3.1 in combinazioni sismiche

Sezione	γM	N	M	V	Vt	Vp	Vt fess. diag.	Vt,lim	Comb.	c.s.	Verifica
ini.	2	-2039	-1586.48	7266			1970	768	SLV 14	0.11	No
fin.	2	2729	1112.81	3445			1253	0	SLV 14	0	No
ini.	2	1331	890.04	-2295			1253	0	SLV 3	0	No
fin.	2	-2169	-1153.29	-6442			2016	783	SLV 3	0.12	No
ini.	2	-2039	-1586.48	7266			1970	768	SLV 13	0.11	No
fin.	2	2729	1112.81	3445			1253	0	SLV 13	0	No
ini.	2	1980	894.55	-1276			1253	0	SLV 6	0	No
fin.	2	-1618	-799.03	-1751			1822	717	SLV 6	0.41	No
ini.	2	-2688	-1590.99	6247			2199	841	SLV 12	0.13	No
fin.	2	2178	758.55	-1246			1253	0	SLV 12	0	No
ini.	2	-2688	-1590.99	6247			2199	841	SLV 11	0.13	No
fin.	2	2178	758.55	-1246			1253	0	SLV 11	0	No
ini.	2	2337	1369.65	-3576			1253	0	SLV 2	0	No
fin.	2	-2809	-1394.87	-5765			2241	854	SLV 2	0.15	No
ini.	2	1980	894.55	-1276			1253	0	SLV 5	0	No
fin.	2	-1618	-799.03	-1751			1822	717	SLV 5	0.41	No
ini.	2	2337	1369.65	-3576			1253	0	SLV 1	0	No
fin.	2	-2809	-1394.87	-5765			2241	854	SLV 1	0.15	No
ini.	2	1331	890.04	-2295			1253	0	SLV 4	0	No
fin.	2	-2169	-1153.29	-6442			2016	783	SLV 4	0.12	No

Tabella dei coefficienti di sicurezza minimi

Stato limite	Coeff.s.	Comb.	Verifica
PF_SLV	0.799	SLV 15	No
V_SLV	0	SLV 1	No
PF_SLU	1.898	SLU 78	Si
V_SLU	0.091	SLU 77	No

Trave di accoppiamento 66

Verifiche condotte secondo D.M. 17-01-18 (N.T.C.)

Dati geometrici

X ini.	Y ini.	Z ini.inf.	Z ini.sup.	H ini.	X fin.	Y fin.	Z fin.inf.	Z fin.sup	H fin.	Luce	Spessore	R. Trazione
-24.643	1.321	6.45	7.9	1.45	-24.643	2.121	6.45	7.9	1.45	0.8	0.28	30000

Caratteristiche del materiale

(Circolare 7 21-01-19 C8.5.I) Muratura in mattoni pieni e malta di calce LC2_Corti

fb_	fhk	fvk0	fhmedio	τ0	fv0	μ	ϕ	fvk,lim	E	G	FC
120000			172500	9000	20000	0.577	0.767	6500	320000000	128000000	1.2

Verifiche a pressoflessione delle travi in muratura in combinazioni non sismiche

Sezione	γM	N	M	Mu	Comb.	c.s.	Verifica
ini.	3	898	212.59	2986.79	SLU 40	14.05	Si
fin.	3	546	-15.38	2986.79	SLU 40	194.21	Si
ini.	3	801	214.67	2986.79	SLU 41	13.91	Si
fin.	3	406	-52.37	2986.79	SLU 41	57.03	Si
ini.	3	831	204.65	2986.79	SLU 42	14.59	Si
fin.	3	492	-13.32	2986.79	SLU 42	224.31	Si
ini.	3	397	36.41	2986.79	SLU 51	82.04	Si
fin.	3	592	209.06	2986.79	SLU 51	14.29	Si

Sezione	γM	N	M	Mu	Comb.	c.s.	Verifica
ini.	3	943	221.59	2986.79	SLU 81	13.48	Si
fin.	3	604	-0.25	2986.79	SLU 81	11805.51	Si
ini.	3	973	211.57	2986.79	SLU 82	14.12	Si
fin.	3	690	38.8	2986.79	SLU 82	76.98	Si
ini.	3	868	222.61	2986.79	SLU 39	13.42	Si
fin.	3	460	-54.43	2986.79	SLU 39	54.87	Si
ini.	3	484	37.67	2986.79	SLU 47	79.28	Si
fin.	3	703	233.03	2986.79	SLU 47	12.82	Si
ini.	3	875	213.64	2986.79	SLU 83	13.98	Si
fin.	3	550	1.81	2986.79	SLU 83	1649.11	Si
ini.	3	552	45.61	2986.79	SLU 44	65.48	Si
fin.	3	757	230.97	2986.79	SLU 44	12.93	Si

Verifiche a taglio delle travi in muratura secondo §C8.7.1.3.1 in combinazioni non sismiche

Sezione	γM	N	M	V	Vt	Vp	Vt fess. diag.	Vt,lim	Comb.	c.s.	Verifica
ini.	3	816	190.31	2950			1564	371	SLU 74	0.13	No
fin.	3	557	28.51	-2900			1564	451	SLU 74	0.16	No
ini.	3	973	211.57	2898			1564	312	SLU 82	0.11	No
fin.	3	690	38.8	-2924			1564	412	SLU 82	0.14	No
ini.	3	752	165.42	3115			1564	392	SLU 80	0.13	No
fin.	3	582	74.68	-2727			1564	444	SLU 80	0.16	No
ini.	3	905	203.63	2981			1564	339	SLU 84	0.11	No
fin.	3	636	40.86	-2938			1564	428	SLU 84	0.15	No
ini.	3	875	213.64	2889			1564	350	SLU 83	0.12	No
fin.	3	550	1.81	-3064			1564	453	SLU 83	0.15	No
ini.	3	779	172.35	3125			1564	383	SLU 78	0.12	No
fin.	3	589	69.62	-2787			1564	442	SLU 78	0.16	No
ini.	3	840	166.69	3094			1564	362	SLU 76	0.12	No
fin.	3	693	98.66	-2629			1564	411	SLU 76	0.16	No
ini.	3	908	174.63	3011			1564	338	SLU 73	0.11	No
fin.	3	747	96.59	-2615			1564	394	SLU 73	0.15	No
ini.	3	943	221.59	2806			1564	324	SLU 81	0.12	No
fin.	3	604	-0.25	-3051			1564	438	SLU 81	0.14	No
ini.	3	846	180.29	3043			1564	360	SLU 75	0.12	No
fin.	3	643	67.56	-2774			1564	426	SLU 75	0.15	No

Verifiche a pressoflessione delle travi in muratura in combinazioni sismiche

Sezione	γM	N	M	Mu	Comb.	c.s.	Verifica
ini.	2	2451	1215.38	4480.18	SLV 7	3.69	Si
fin.	2	-489	-1379.28	4480.18	SLV 7	3.25	Si
ini.	2	-1394	-1015	4480.18	SLV 9	4.41	Si
fin.	2	1423	1525.9	4480.18	SLV 9	2.94	Si
ini.	2	2451	1215.38	4480.18	SLV 8	3.69	Si
fin.	2	-489	-1379.28	4480.18	SLV 8	3.25	Si
ini.	2	-1394	-1015	4480.18	SLV 10	4.41	Si
fin.	2	1423	1525.9	4480.18	SLV 10	2.94	Si
ini.	2	-693	-819.99	4480.18	SLV 5	5.46	Si
fin.	2	1604	1317.89	4480.18	SLV 5	3.4	Si
ini.	2	-693	-819.99	4480.18	SLV 6	5.46	Si
fin.	2	1604	1317.89	4480.18	SLV 6	3.4	Si
ini.	2	-1110	-530.14	4480.18	SLV 14	8.45	Si
fin.	2	478	824.58	4480.18	SLV 14	5.43	Si
ini.	2	1751	1020.37	4480.18	SLV 12	4.39	Si
fin.	2	-671	-1171.27	4480.18	SLV 12	3.83	Si
ini.	2	1751	1020.37	4480.18	SLV 11	4.39	Si
fin.	2	-671	-1171.27	4480.18	SLV 11	3.83	Si
ini.	2	-1110	-530.14	4480.18	SLV 13	8.45	Si
fin.	2	478	824.58	4480.18	SLV 13	5.43	Si

Verifiche a taglio delle travi in muratura secondo §C8.7.1.3.1 in combinazioni sismiche

Sezione	γM	N	M	V	Vt	Vp	Vt fess. diag.	Vt,lim	Comb.	c.s.	Verifica
ini.	2	-1394	-1015	7584			2903	1146	SLV 10	0.15	No
fin.	2	1423	1525.9	4045			2345	483	SLV 10	0.12	No
ini.	2	-1394	-1015	7584			2903	1146	SLV 9	0.15	No
fin.	2	1423	1525.9	4045			2345	483	SLV 9	0.12	No
ini.	2	2451	1215.38	-3055			2345	0	SLV 8	0	No
fin.	2	-489	-1379.28	-7679			2541	983	SLV 8	0.13	No
ini.	2	1751	1020.37	-2793			2345	327	SLV 12	0.12	No
fin.	2	-671	-1171.27	-6574			2614	1018	SLV 12	0.15	No
ini.	2	2168	730.52	271			2345	0	SLV 4	0	No
fin.	2	455	-677.96	-5252			2345	777	SLV 4	0.15	No
ini.	2	1751	1020.37	-2793			2345	327	SLV 11	0.12	No
fin.	2	-671	-1171.27	-6574			2614	1018	SLV 11	0.15	No
ini.	2	-693	-819.99	7322			2623	1022	SLV 6	0.14	No
fin.	2	1604	1317.89	2940			2345	404	SLV 6	0.14	No
ini.	2	-693	-819.99	7322			2623	1022	SLV 5	0.14	No
fin.	2	1604	1317.89	2940			2345	404	SLV 5	0.14	No
ini.	2	2451	1215.38	-3055			2345	0	SLV 7	0	No
fin.	2	-489	-1379.28	-7679			2541	983	SLV 7	0.13	No
ini.	2	2168	730.52	271			2345	0	SLV 3	0	No
fin.	2	455	-677.96	-5252			2345	777	SLV 3	0.15	No

Tabella dei coefficienti di sicurezza minimi

Stato limite	Coeff.s.	Comb.	Verifica
PF_SLV	2.936	SLV 9	Si
V_SLV	0	SLV 3	No
PF_SLU	12.817	SLU 47	Si
V_SLU	0.108	SLU 82	No

Trave di accoppiamento 67

Verifiche condotte secondo D.M. 17-01-18 (N.T.C.)

Dati geometrici

X ini.	Y ini.	Z ini.inf.	Z ini.sup.	H ini.	X fin.	Y fin.	Z fin.inf.	Z fin.sup	H fin.	Luce	Spessore	R. Trazione
-21.849	5.798	4.35	5.25	0.9	-22.849	5.798	4.35	5.25	0.9	1	0.28	30000

Caratteristiche del materiale

(Circolare 7 21-01-19 C8.5.I) Muratura in mattoni pieni e malta di calce LC2_Corti

fb_	fhk	fvk0	fhmedio	τ0	fv0	μ	ϕ	fvk,lim	E	G	FC
120000			172500	9000	20000	0.577	0.767	6500	320000000	128000000	1.2

Verifiche a pressoflessione delle travi in muratura in combinazioni non sismiche

Sezione	γM	N	M	Mu	Comb.	c.s.	Verifica
ini.	3	-756	440.65	1150.68	SLU 84	2.61	Si
fin.	3	365	-322.14	1150.68	SLU 84	3.57	Si
ini.	3	-774	431.75	1150.68	SLU 71	2.67	Si
fin.	3	327	-311.68	1150.68	SLU 71	3.69	Si
ini.	3	-807	466.39	1150.68	SLU 77	2.47	Si
fin.	3	387	-343.09	1150.68	SLU 77	3.35	Si
ini.	3	-772	430.23	1150.68	SLU 69	2.67	Si
fin.	3	322	-308.42	1150.68	SLU 69	3.73	Si
ini.	3	-774	432.46	1150.68	SLU 70	2.66	Si
fin.	3	328	-311.22	1150.68	SLU 70	3.7	Si
ini.	3	-809	468.62	1150.68	SLU 78	2.46	Si
fin.	3	393	-345.89	1150.68	SLU 78	3.33	Si
ini.	3	-776	433.99	1150.68	SLU 72	2.65	Si
fin.	3	333	-314.48	1150.68	SLU 72	3.66	Si
ini.	3	-810	467.91	1150.68	SLU 79	2.46	Si
fin.	3	392	-346.35	1150.68	SLU 79	3.32	Si
ini.	3	-754	438.42	1150.68	SLU 83	2.62	Si
fin.	3	359	-319.34	1150.68	SLU 83	3.6	Si
ini.	3	-812	470.14	1150.68	SLU 80	2.45	Si
fin.	3	398	-349.15	1150.68	SLU 80	3.3	Si

Verifiche a taglio delle travi in muratura secondo §C8.7.1.3.1 in combinazioni non sismiche

Sezione	γM	N	M	V	Vt	Vp	Vt fess. diag.	Vt,lim	Comb.	c.s.	Verifica
ini.	3	-756	440.65	-2454			1146	453	SLU 84	0.18	No
fin.	3	365	-322.14	-251			873	247	SLU 84	0.99	No
ini.	3	-809	468.62	-2571			1165	461	SLU 78	0.18	No
fin.	3	393	-345.89	-309			873	240	SLU 78	0.77	No
ini.	3	-774	432.46	-2392			1152	456	SLU 70	0.19	No
fin.	3	328	-311.22	-249			873	257	SLU 70	1.03	Si
ini.	3	-737	421.4	-2382			1139	450	SLU 74	0.19	No
fin.	3	327	-301.23	-187			873	257	SLU 74	1.37	Si
ini.	3	-743	426.64	-2380			1141	451	SLU 76	0.19	No
fin.	3	342	-309.15	-234			873	253	SLU 76	1.08	Si
ini.	3	-739	423.63	-2386			1139	451	SLU 75	0.19	No
fin.	3	333	-304.02	-201			873	255	SLU 75	1.27	Si
ini.	3	-812	470.14	-2562			1166	461	SLU 80	0.18	No
fin.	3	398	-349.15	-333			873	238	SLU 80	0.72	No
ini.	3	-807	466.39	-2567			1164	460	SLU 77	0.18	No
fin.	3	387	-343.09	-295			873	241	SLU 77	0.82	No
ini.	3	-810	467.91	-2558			1165	461	SLU 79	0.18	No
fin.	3	392	-346.35	-319			873	240	SLU 79	0.75	No
ini.	3	-754	438.42	-2451			1145	453	SLU 83	0.18	No
fin.	3	359	-319.34	-237			873	249	SLU 83	1.05	Si

Verifiche a pressoflessione delle travi in muratura in combinazioni sismiche

Sezione	γM	N	M	Mu	Comb.	c.s.	Verifica
ini.	2	1848	-922.4	1726.01	SLV 9	1.87	Si
fin.	2	-769	1064.17	1726.01	SLV 9	1.62	Si
ini.	2	-1994	1271.68	1726.01	SLV 2	1.36	Si
fin.	2	2046	-1181.33	1726.01	SLV 2	1.46	Si
ini.	2	-2815	1447.59	1726.01	SLV 7	1.19	Si
fin.	2	1090	-1415.2	1726.01	SLV 7	1.22	Si
ini.	2	-3028	1757.33	1726.01	SLV 3	0.98	No
fin.	2	2246	-1697.63	1726.01	SLV 3	1.02	Si
ini.	2	-1994	1271.68	1726.01	SLV 1	1.36	Si
fin.	2	2046	-1181.33	1726.01	SLV 1	1.46	Si
ini.	2	1848	-922.4	1726.01	SLV 10	1.87	Si
fin.	2	-769	1064.17	1726.01	SLV 10	1.62	Si
ini.	2	2061	-1232.14	1726.01	SLV 14	1.4	Si
fin.	2	-1925	1346.6	1726.01	SLV 14	1.28	Si
ini.	2	2061	-1232.14	1726.01	SLV 13	1.4	Si
fin.	2	-1925	1346.6	1726.01	SLV 13	1.28	Si
ini.	2	-2815	1447.59	1726.01	SLV 8	1.19	Si
fin.	2	1090	-1415.2	1726.01	SLV 8	1.22	Si
ini.	2	-3028	1757.33	1726.01	SLV 4	0.98	No
fin.	2	2246	-1697.63	1726.01	SLV 4	1.02	Si

Verifiche a taglio delle travi in muratura secondo §C8.7.1.3.1 in combinazioni sismiche

Sezione	γM	N	M	V	Vt	Vp	Vt fess. diag.	Vt,lim	Comb.	c.s.	Verifica
ini.	2	-3028	1757.33	-6732			2400	910	SLV 3	0.14	No
fin.	2	2246	-1697.63	-3840			1310	0	SLV 3	0	No
ini.	2	2061	-1232.14	3640			1310	0	SLV 13	0	No
fin.	2	-1925	1346.6	3776			2003	784	SLV 13	0.21	No
ini.	2	-3028	1757.33	-6732			2400	910	SLV 4	0.14	No
fin.	2	2246	-1697.63	-3840			1310	0	SLV 4	0	No

Sezione	γM	N	M	V	Vt	Vp	Vt fess. diag.	Vt,lim	Comb.	c.s.	Verifica
ini.	2	2061	-1232.14	3640			1310	0	SLV 14	0	No
fin.	2	-1925	1346.6	3776			2003	784	SLV 14	0.21	No
ini.	2	-1994	1271.68	-5533			2028	792	SLV 1	0.14	No
fin.	2	2046	-1181.33	-4457			1310	0	SLV 1	0	No
ini.	2	-1994	1271.68	-5533			2028	792	SLV 2	0.14	No
fin.	2	2046	-1181.33	-4457			1310	0	SLV 2	0	No
ini.	2	1848	-922.4	1829			1310	0	SLV 10	0	No
fin.	2	-769	1064.17	174			1587	626	SLV 10	3.59	Si
ini.	2	1848	-922.4	1829			1310	0	SLV 9	0	No
fin.	2	-769	1064.17	174			1587	626	SLV 9	3.59	Si
ini.	2	1027	-746.48	2441			1310	212	SLV 15	0.09	No
fin.	2	-1724	830.3	4393			1931	759	SLV 15	0.17	No
ini.	2	1027	-746.48	2441			1310	212	SLV 16	0.09	No
fin.	2	-1724	830.3	4393			1931	759	SLV 16	0.17	No

Tabella dei coefficienti di sicurezza minimi

Stato limite	Coeff.s.	Comb.	Verifica
PF_SLV	0.982	SLV 3	No
V_SLV	0	SLV 1	No
PF_SLU	2.447	SLU 80	Si
V_SLU	0.179	SLU 78	No

Trave di accoppiamento 68

Verifiche condotte secondo D.M. 17-01-18 (N.T.C.)

Dati geometrici

X ini.	Y ini.	Z ini.inf.	Z ini.sup.	H ini.	X fin.	Y fin.	Z fin.inf.	Z fin.sup	H fin.	Luce	Spessore	R. Trazione
-21.849	5.798	7.15	7.9	0.75	-22.849	5.798	7.15	7.9	0.75	1	0.28	30000

Caratteristiche del materiale

(Circolare 7 21-01-19 C8.5.I) Muratura in mattoni pieni e malta di calce LC2_Corti

fb_	fhk	fvk0	fhmedio	τ0	fv0	μ	ϕ	fvk,lim	E	G	FC
120000			172500	9000	20000	0.577	0.767	6500	320000000	128000000	1.2

Verifiche a pressoflessione delle travi in muratura in combinazioni non sismiche

Sezione	γM	N	M	Mu	Comb.	c.s.	Verifica
ini.	3	788	237.83	799.08	SLU 72	3.36	Si
fin.	3	-468	-474.5	799.08	SLU 72	1.68	Si
ini.	3	797	228.53	799.08	SLU 83	3.5	Si
fin.	3	-478	-504.72	799.08	SLU 83	1.58	Si
ini.	3	851	253.86	799.08	SLU 78	3.15	Si
fin.	3	-515	-524.35	799.08	SLU 78	1.52	Si
ini.	3	773	218.01	799.08	SLU 74	3.67	Si
fin.	3	-447	-483.25	799.08	SLU 74	1.65	Si
ini.	3	776	220.7	799.08	SLU 75	3.62	Si
fin.	3	-455	-485.76	799.08	SLU 75	1.65	Si
ini.	3	775	225.04	799.08	SLU 76	3.55	Si
fin.	3	-469	-487.5	799.08	SLU 76	1.64	Si
ini.	3	799	231.21	799.08	SLU 84	3.46	Si
fin.	3	-487	-507.23	799.08	SLU 84	1.58	Si
ini.	3	848	251.18	799.08	SLU 77	3.18	Si
fin.	3	-506	-521.85	799.08	SLU 77	1.53	Si
ini.	3	848	256.41	799.08	SLU 80	3.12	Si
fin.	3	-523	-524.43	799.08	SLU 80	1.52	Si
ini.	3	846	253.73	799.08	SLU 79	3.15	Si
fin.	3	-515	-521.92	799.08	SLU 79	1.53	Si

Verifiche a taglio delle travi in muratura secondo §C8.7.1.3.1 in combinazioni non sismiche

Sezione	γM	N	M	V	Vt	Vp	Vt fess. diag.	Vt,lim	Comb.	c.s.	Verifica
ini.	3	740	228.75	284			607	0	SLU 37	0	No
fin.	3	-469	-459.31	-2544			747	295	SLU 37	0.12	No
ini.	3	708	207.01	296			607	0	SLU 49	0	No
fin.	3	-394	-416.79	-2368			725	285	SLU 49	0.12	No
ini.	3	706	209.57	277			607	0	SLU 51	0	No
fin.	3	-402	-416.86	-2360			727	286	SLU 51	0.12	No
ini.	3	797	228.53	498			607	0	SLU 83	0	No
fin.	3	-478	-504.72	-2898			750	296	SLU 83	0.1	No
ini.	3	765	222.91	374			607	0	SLU 56	0	No
fin.	3	-440	-464.21	-2640			738	291	SLU 56	0.11	No
ini.	3	705	204.33	307			607	0	SLU 48	0	No
fin.	3	-385	-414.28	-2360			722	284	SLU 48	0.12	No
ini.	3	799	231.21	487			607	0	SLU 84	0	No
fin.	3	-487	-507.23	-2906			753	297	SLU 84	0.1	No
ini.	3	768	225.59	363			607	0	SLU 57	0	No
fin.	3	-448	-466.72	-2648			741	292	SLU 57	0.11	No
ini.	3	703	206.88	288			607	0	SLU 50	0	No
fin.	3	-393	-414.36	-2352			725	285	SLU 50	0.12	No
ini.	3	742	231.43	272			607	0	SLU 38	0	No
fin.	3	-477	-461.82	-2552			750	296	SLU 38	0.12	No

Verifiche a pressoflessione delle travi in muratura in combinazioni sismiche

Sezione	γM	N	M	Mu	Comb.	c.s.	Verifica
ini.	2	1723	804.21	1198.62	SLV 2	1.49	Si
fin.	2	-1259	-911.63	1198.62	SLV 2	1.31	Si
ini.	2	-1463	-858.51	1198.62	SLV 13	1.4	Si
fin.	2	1636	740.77	1198.62	SLV 13	1.62	Si

Sezione	γM	N	M	Mu	Comb.	c.s.	Verifica
ini.	2	2440	1116.43	1198.62	SLV 4	1.07	Si
fin.	2	-2162	-1351.36	1198.62	SLV 4	0.89	No
ini.	2	1723	804.21	1198.62	SLV 1	1.49	Si
fin.	2	-1259	-911.63	1198.62	SLV 1	1.31	Si
ini.	2	2160	898.74	1198.62	SLV 7	1.33	Si
fin.	2	-2203	-1286.03	1198.62	SLV 7	0.93	No
ini.	2	1204	399.92	1198.62	SLV 12	3	Si
fin.	2	-1335	-790.31	1198.62	SLV 12	1.52	Si
ini.	2	1204	399.92	1198.62	SLV 11	3	Si
fin.	2	-1335	-790.31	1198.62	SLV 11	1.52	Si
ini.	2	2160	898.74	1198.62	SLV 8	1.33	Si
fin.	2	-2203	-1286.03	1198.62	SLV 8	0.93	No
ini.	2	2440	1116.43	1198.62	SLV 3	1.07	Si
fin.	2	-2162	-1351.36	1198.62	SLV 3	0.89	No
ini.	2	-1463	-858.51	1198.62	SLV 14	1.4	Si
fin.	2	1636	740.77	1198.62	SLV 14	1.62	Si

Verifiche a taglio delle travi in muratura secondo §C8.7.1.3.1 in combinazioni sismiche

Sezione	γM	N	M	V	Vt	Vp	Vt fess. diag.	Vt,lim	Comb.	c.s.	Verifica
ini.	2	2160	898.74	192			910	0	SLV 8	0	No
fin.	2	-2203	-1286.03	-4613			1571	603	SLV 8	0.13	No
ini.	2	2440	1116.43	-2235			910	0	SLV 4	0	No
fin.	2	-2162	-1351.36	-5360			1558	599	SLV 4	0.11	No
ini.	2	-1184	-640.81	586			1265	499	SLV 9	0.85	No
fin.	2	1676	675.45	984			910	0	SLV 9	0	No
ini.	2	1204	399.92	1884			910	0	SLV 11	0	No
fin.	2	-1335	-790.31	-2829			1310	516	SLV 11	0.18	No
ini.	2	2440	1116.43	-2235			910	0	SLV 3	0	No
fin.	2	-2162	-1351.36	-5360			1558	599	SLV 3	0.11	No
ini.	2	1723	804.21	-2624			910	0	SLV 2	0	No
fin.	2	-1259	-911.63	-4216			1288	508	SLV 2	0.12	No
ini.	2	1204	399.92	1884			910	0	SLV 12	0	No
fin.	2	-1335	-790.31	-2829			1310	516	SLV 12	0.18	No
ini.	2	-1184	-640.81	586			1265	499	SLV 10	0.85	No
fin.	2	1676	675.45	984			910	0	SLV 10	0	No
ini.	2	1723	804.21	-2624			910	0	SLV 1	0	No
fin.	2	-1259	-911.63	-4216			1288	508	SLV 1	0.12	No
ini.	2	2160	898.74	192			910	0	SLV 7	0	No
fin.	2	-2203	-1286.03	-4613			1571	603	SLV 7	0.13	No

Tabella dei coefficienti di sicurezza minimi

Stato limite	Coeff.s.	Comb.	Verifica
PF_SLV	0.887	SLV 3	No
V_SLV	0	SLV 1	No
PF_SLU	1.524	SLU 80	Si
V_SLU	0	SLU 35	No

Trave di accoppiamento 69

Verifiche condotte secondo D.M. 17-01-18 (N.T.C.)

Dati geometrici

X ini.	Y ini.	Z ini.inf.	Z ini.sup.	H ini.	X fin.	Y fin.	Z fin.inf.	Z fin.sup	H fin.	Luce	Spessore	R. Trazione
-21.608	-3.254	4.35	5.25	0.9	-22.608	-3.254	4.35	5.25	0.9	1	0.28	30000

Caratteristiche del materiale

(Circolare 7 21-01-19 C8.5.I) Muratura in mattoni pieni e malta di calce LC2_Corti

fb_	fhk	fvk0	fhmedio	τ0	fv0	μ	ϕ	fvk,lim	E	G	FC
120000			172500	9000	20000	0.577	0.767	6500	320000000	128000000	1.2

Verifiche a pressoflessione delle travi in muratura in combinazioni non sismiche

Sezione	γM	N	M	Mu	Comb.	c.s.	Verifica
ini.	3	-2047	616.13	1150.68	SLU 69	1.87	Si
fin.	3	-565	-287.92	1150.68	SLU 69	4	Si
ini.	3	-1897	631	1150.68	SLU 84	1.82	Si
fin.	3	-325	-326.63	1150.68	SLU 84	3.52	Si
ini.	3	-2045	614.23	1150.68	SLU 56	1.87	Si
fin.	3	-565	-287.36	1150.68	SLU 56	4	Si
ini.	3	-2192	675.13	1150.68	SLU 77	1.7	Si
fin.	3	-548	-329.13	1150.68	SLU 77	3.5	Si
ini.	3	-2148	646.66	1150.68	SLU 81	1.78	Si
fin.	3	-586	-305.67	1150.68	SLU 81	3.76	Si
ini.	3	-2143	649.44	1150.68	SLU 74	1.77	Si
fin.	3	-573	-308.63	1150.68	SLU 74	3.73	Si
ini.	3	-2185	672.76	1150.68	SLU 79	1.71	Si
fin.	3	-543	-329.01	1150.68	SLU 79	3.5	Si
ini.	3	-2198	672.36	1150.68	SLU 83	1.71	Si
fin.	3	-561	-326.17	1150.68	SLU 83	3.53	Si
ini.	3	-1891	633.77	1150.68	SLU 78	1.82	Si
fin.	3	-312	-329.58	1150.68	SLU 78	3.49	Si
ini.	3	-1884	631.4	1150.68	SLU 80	1.82	Si
fin.	3	-307	-329.46	1150.68	SLU 80	3.49	Si

Verifiche a taglio delle travi in muratura secondo §C8.7.1.3.1 in combinazioni non sismiche

Sezione	γM	N	M	V	Vt	Vp	Vt fess. diag.	Vt,lim	Comb.	c.s.	Verifica
ini.	3	-1891	633.77	-2562			1554	593	SLU 78	0.23	No
fin.	3	-312	-329.58	-644			986	385	SLU 78	0.6	No

Sezione	γM	N	M	V	Vt	Vp	Vt fess. diag.	Vt,lim	Comb.	c.s.	Verifica
ini.	3	-1585	552.44	-2380			1444	559	SLU 73	0.23	No
fin.	3	-201	-288.76	-411			946	366	SLU 73	0.89	No
ini.	3	-1884	631.4	-2544			1552	592	SLU 80	0.23	No
fin.	3	-307	-329.46	-656			984	384	SLU 80	0.59	No
ini.	3	-1842	608.08	-2457			1537	587	SLU 75	0.24	No
fin.	3	-338	-309.08	-592			995	389	SLU 75	0.66	No
ini.	3	-1897	631	-2530			1556	593	SLU 84	0.23	No
fin.	3	-325	-326.63	-660			991	387	SLU 84	0.59	No
ini.	3	-1635	578.14	-2485			1462	564	SLU 76	0.23	No
fin.	3	-176	-309.26	-463			937	361	SLU 76	0.78	No
ini.	3	-1490	519.13	-2272			1410	547	SLU 68	0.24	No
fin.	3	-193	-268.05	-332			943	365	SLU 68	1.1	Si
ini.	3	-1488	517.23	-2258			1409	547	SLU 55	0.24	No
fin.	3	-193	-267.49	-342			943	364	SLU 55	1.07	Si
ini.	3	-1848	605.3	-2426			1539	588	SLU 82	0.24	No
fin.	3	-351	-306.13	-608			1000	391	SLU 82	0.64	No
ini.	3	-1259	478.47	-2124			1327	520	SLU 34	0.24	No
fin.	3	-27	-272.97	-378			883	334	SLU 34	0.88	No

Verifiche a pressoflessione delle travi in muratura in combinazioni sismiche

Sezione	γM	N	M	Mu	Comb.	c.s.	Verifica
ini.	2	-3853	1553.73	1726.01	SLV 5	1.11	Si
fin.	2	371	-859.42	1726.01	SLV 5	2.01	Si
ini.	2	1708	-1078.08	1726.01	SLV 13	1.6	Si
fin.	2	-2387	1313.07	1726.01	SLV 13	1.31	Si
ini.	2	1708	-1078.08	1726.01	SLV 14	1.6	Si
fin.	2	-2387	1313.07	1726.01	SLV 14	1.31	Si
ini.	2	-4713	1950.22	1726.01	SLV 3	0.89	No
fin.	2	1449	-1697.94	1726.01	SLV 3	1.02	Si
ini.	2	-4713	1950.22	1726.01	SLV 4	0.89	No
fin.	2	1449	-1697.94	1726.01	SLV 4	1.02	Si
ini.	2	2472	-1443.27	1726.01	SLV 16	1.2	Si
fin.	2	-2532	1431.6	1726.01	SLV 16	1.21	Si
ini.	2	-5477	2315.4	1726.01	SLV 2	0.75	No
fin.	2	1595	-1816.47	1726.01	SLV 2	0.95	No
ini.	2	2472	-1443.27	1726.01	SLV 15	1.2	Si
fin.	2	-2532	1431.6	1726.01	SLV 15	1.21	Si
ini.	2	-3853	1553.73	1726.01	SLV 6	1.11	Si
fin.	2	371	-859.42	1726.01	SLV 6	2.01	Si
ini.	2	-5477	2315.4	1726.01	SLV 1	0.75	No
fin.	2	1595	-1816.47	1726.01	SLV 1	0.95	No

Verifiche a taglio delle travi in muratura secondo §C8.7.1.3.1 in combinazioni sismiche

Sezione	γM	N	M	V	Vt	Vp	Vt fess. diag.	Vt,lim	Comb.	c.s.	Verifica
ini.	2	-1307	336.46	-2229			1781	704	SLV 7	0.32	No
fin.	2	-114	-464.32	-2641			1351	515	SLV 7	0.19	No
ini.	2	2472	-1443.27	4736			1310	0	SLV 15	0	No
fin.	2	-2532	1431.6	4660			2222	855	SLV 15	0.18	No
ini.	2	-5477	2315.4	-7916			3282	1140	SLV 2	0.14	No
fin.	2	1595	-1816.47	-5653			1310	0	SLV 2	0	No
ini.	2	1708	-1078.08	4043			1310	0	SLV 14	0	No
fin.	2	-2387	1313.07	4989			2169	839	SLV 14	0.17	No
ini.	2	-1307	336.46	-2229			1781	704	SLV 8	0.32	No
fin.	2	-114	-464.32	-2641			1351	515	SLV 8	0.19	No
ini.	2	-4713	1950.22	-7223			3007	1074	SLV 3	0.15	No
fin.	2	1449	-1697.94	-5982			1310	0	SLV 3	0	No
ini.	2	-5477	2315.4	-7916			3282	1140	SLV 1	0.14	No
fin.	2	1595	-1816.47	-5653			1310	0	SLV 1	0	No
ini.	2	2472	-1443.27	4736			1310	0	SLV 16	0	No
fin.	2	-2532	1431.6	4660			2222	855	SLV 16	0.18	No
ini.	2	-4713	1950.22	-7223			3007	1074	SLV 4	0.15	No
fin.	2	1449	-1697.94	-5982			1310	0	SLV 4	0	No
ini.	2	1708	-1078.08	4043			1310	0	SLV 13	0	No
fin.	2	-2387	1313.07	4989			2169	839	SLV 13	0.17	No

Tabella dei coefficienti di sicurezza minimi

Stato limite	Coeff.s.	Comb.	Verifica
PF_SLV	0.745	SLV 1	No
V_SLV	0	SLV 1	No
PF_SLU	1.704	SLU 77	Si
V_SLU	0.227	SLU 76	No

Trave di accoppiamento 70

Verifiche condotte secondo D.M. 17-01-18 (N.T.C.)

Dati geometrici

X ini.	Y ini.	Z ini.inf.	Z ini.sup.	H ini.	X fin.	Y fin.	Z fin.inf.	Z fin.sup	H fin.	Luce	Spessore	R. Trazione
-21.608	-3.254	7.15	7.9	0.75	-22.608	-3.254	7.15	7.9	0.75	1	0.28	30000

Caratteristiche del materiale

(Circolare 7 21-01-19 C8.5.I) Muratura in mattoni pieni e malta di calce LC2_Corti

fb_	fhk	fvk0	fhmedio	τ0	fv0	μ	ϕ	fvk,lim	E	G	FC
120000			172500	9000	20000	0.577	0.767	6500	320000000	128000000	1.2

Verifiche a pressoflessione delle travi in muratura in combinazioni non sismiche

Sezione	γM	N	M	Mu	Comb.	c.s.	Verifica
ini.	3	13	114.38	799.08	SLU 84	6.99	Si
fin.	3	-1244	-563.85	799.08	SLU 84	1.42	Si
ini.	3	-241	84.08	799.08	SLU 81	9.5	Si
fin.	3	-1433	-564.74	799.08	SLU 81	1.41	Si
ini.	3	-171	107.37	799.08	SLU 77	7.44	Si
fin.	3	-1448	-586.02	799.08	SLU 77	1.36	Si
ini.	3	-201	92.57	799.08	SLU 74	8.63	Si
fin.	3	-1407	-563.58	799.08	SLU 74	1.42	Si
ini.	3	53	122.87	799.08	SLU 78	6.5	Si
fin.	3	-1218	-562.68	799.08	SLU 78	1.42	Si
ini.	3	23	108.06	799.08	SLU 75	7.39	Si
fin.	3	-1177	-540.24	799.08	SLU 75	1.48	Si
ini.	3	-179	107.58	799.08	SLU 79	7.43	Si
fin.	3	-1448	-582.41	799.08	SLU 79	1.37	Si
ini.	3	-211	98.88	799.08	SLU 83	8.08	Si
fin.	3	-1474	-587.19	799.08	SLU 83	1.36	Si
ini.	3	45	123.08	799.08	SLU 80	6.49	Si
fin.	3	-1218	-559.07	799.08	SLU 80	1.43	Si
ini.	3	-17	99.58	799.08	SLU 82	8.02	Si
fin.	3	-1203	-541.4	799.08	SLU 82	1.48	Si

Verifiche a taglio delle travi in muratura secondo §C8.7.1.3.1 in combinazioni non sismiche

Sezione	γM	N	M	V	Vt	Vp	Vt fess. diag.	Vt,lim	Comb.	c.s.	Verifica
ini.	3	-17	99.58	712			612	231	SLU 82	0.32	No
fin.	3	-1203	-541.4	-2985			967	376	SLU 82	0.13	No
ini.	3	135	103.8	710			607	205	SLU 73	0.29	No
fin.	3	-983	-498.62	-2845			901	354	SLU 73	0.12	No
ini.	3	-171	107.37	613			658	255	SLU 77	0.42	No
fin.	3	-1448	-586.02	-3065			1041	400	SLU 77	0.13	No
ini.	3	53	122.87	639			607	219	SLU 78	0.34	No
fin.	3	-1218	-562.68	-3065			972	378	SLU 78	0.12	No
ini.	3	-211	98.88	654			670	260	SLU 83	0.4	No
fin.	3	-1474	-587.19	-3083			1049	402	SLU 83	0.13	No
ini.	3	13	114.38	680			607	226	SLU 84	0.33	No
fin.	3	-1244	-563.85	-3084			980	380	SLU 84	0.12	No
ini.	3	23	108.06	671			607	224	SLU 75	0.33	No
fin.	3	-1177	-540.24	-2966			960	374	SLU 75	0.13	No
ini.	3	164	118.61	678			607	200	SLU 76	0.29	No
fin.	3	-1024	-521.07	-2944			914	358	SLU 76	0.12	No
ini.	3	45	123.08	629			607	221	SLU 80	0.35	No
fin.	3	-1218	-559.07	-3042			972	378	SLU 80	0.12	No
ini.	3	158	101.21	647			607	201	SLU 55	0.31	No
fin.	3	-875	-457.95	-2625			869	342	SLU 55	0.13	No

Verifiche a pressoflessione delle travi in muratura in combinazioni sismiche

Sezione	γM	N	M	Mu	Comb.	c.s.	Verifica
ini.	2	-2247	-1171.93	1198.62	SLV 16	1.02	Si
fin.	2	1586	901.81	1198.62	SLV 16	1.33	Si
ini.	2	-2247	-1171.93	1198.62	SLV 15	1.02	Si
fin.	2	1586	901.81	1198.62	SLV 15	1.33	Si
ini.	2	1031	1213.46	1198.62	SLV 4	0.99	No
fin.	2	-4284	-1651.93	1198.62	SLV 4	0.73	No
ini.	2	1884	1270.46	1198.62	SLV 2	0.94	No
fin.	2	-3471	-1639.6	1198.62	SLV 2	0.73	No
ini.	2	-1111	312.07	1198.62	SLV 7	3.84	Si
fin.	2	-3179	-772.51	1198.62	SLV 7	1.55	Si
ini.	2	1884	1270.46	1198.62	SLV 1	0.94	No
fin.	2	-3471	-1639.6	1198.62	SLV 1	0.73	No
ini.	2	-1394	-1114.92	1198.62	SLV 13	1.08	Si
fin.	2	2400	914.14	1198.62	SLV 13	1.31	Si
ini.	2	-1111	312.07	1198.62	SLV 8	3.84	Si
fin.	2	-3179	-772.51	1198.62	SLV 8	1.55	Si
ini.	2	-1394	-1114.92	1198.62	SLV 14	1.08	Si
fin.	2	2400	914.14	1198.62	SLV 14	1.31	Si
ini.	2	1031	1213.46	1198.62	SLV 3	0.99	No
fin.	2	-4284	-1651.93	1198.62	SLV 3	0.73	No

Verifiche a taglio delle travi in muratura secondo §C8.7.1.3.1 in combinazioni sismiche

Sezione	γM	N	M	V	Vt	Vp	Vt fess. diag.	Vt,lim	Comb.	c.s.	Verifica
ini.	2	-1394	-1114.92	4556			1328	522	SLV 14	0.11	No
fin.	2	2400	914.14	2194			910	0	SLV 14	0	No
ini.	2	1884	1270.46	-3381			910	0	SLV 2	0	No
fin.	2	-3471	-1639.6	-6918			1951	710	SLV 2	0.1	No
ini.	2	747	-213.53	2022			910	184	SLV 9	0.09	No
fin.	2	1294	34.72	-1934			910	0	SLV 9	0	No
ini.	2	1884	1270.46	-3381			910	0	SLV 1	0	No
fin.	2	-3471	-1639.6	-6918			1951	710	SLV 1	0.1	No
ini.	2	747	-213.53	2022			910	184	SLV 10	0.09	No
fin.	2	1294	34.72	-1934			910	0	SLV 10	0	No
ini.	2	1731	502.08	-359			910	0	SLV 5	0	No
fin.	2	-467	-731.41	-4667			1050	412	SLV 5	0.09	No
ini.	2	-2247	-1171.93	4347			1584	607	SLV 16	0.14	No
fin.	2	1586	901.81	2998			910	0	SLV 16	0	No
ini.	2	-1394	-1114.92	4556			1328	522	SLV 13	0.11	No
fin.	2	2400	914.14	2194			910	0	SLV 13	0	No
ini.	2	-2247	-1171.93	4347			1584	607	SLV 15	0.14	No
fin.	2	1586	901.81	2998			910	0	SLV 15	0	No
ini.	2	1731	502.08	-359			910	0	SLV 6	0	No
fin.	2	-467	-731.41	-4667			1050	412	SLV 6	0.09	No

Tabella dei coefficienti di sicurezza minimi

Stato limite	Coeff.s.	Comb.	Verifica
PF_SLV	0.726	SLV 3	No
V_SLV	0	SLV 1	No
PF_SLU	1.361	SLU 83	Si
V_SLU	0.122	SLU 76	No

Trave di accoppiamento 71

Verifiche condotte secondo D.M. 17-01-18 (N.T.C.)

Dati geometrici

X ini.	Y ini.	Z ini.inf.	Z ini.sup.	H ini.	X fin.	Y fin.	Z fin.inf.	Z fin.sup	H fin.	Luce	Spessore	R. Trazione
-18.803	-3.254	4.35	6.35	2	-19.303	-3.254	4.35	6.35	2	0.5	0.28	30000

Caratteristiche del materiale

(Circolare 7 21-01-19 C8.5.I) Muratura in mattoni pieni e malta di calce LC2_Corti

fb_	fhk	fvk0	fhmedio	τ0	fv0	μ	ϕ	fvk,lim	E	G	FC
120000			172500	9000	20000	0.577	0.767	6500	320000000	128000000	1.2

Verifiche a pressoflessione delle travi in muratura in combinazioni non sismiche

Sezione	γM	N	M	Mu	Comb.	c.s.	Verifica
ini.	3	244	1005.76	5682.35	SLU 81	5.65	Si
fin.	3	-1353	997.46	5682.35	SLU 81	5.7	Si
ini.	3	6	911.04	5682.35	SLU 80	6.24	Si
fin.	3	-1132	860.23	5682.35	SLU 80	6.61	Si
ini.	3	159	923.56	5682.35	SLU 62	6.15	Si
fin.	3	-1298	893.8	5682.35	SLU 62	6.36	Si
ini.	3	200	999.95	5682.35	SLU 79	5.68	Si
fin.	3	-1330	952.01	5682.35	SLU 79	5.97	Si
ini.	3	250	1029.02	5682.35	SLU 83	5.52	Si
fin.	3	-1351	1000.57	5682.35	SLU 83	5.68	Si
ini.	3	56	940.11	5682.35	SLU 84	6.04	Si
fin.	3	-1152	908.79	5682.35	SLU 84	6.25	Si
ini.	3	5	914.08	5682.35	SLU 78	6.22	Si
fin.	3	-1147	870.59	5682.35	SLU 78	6.53	Si
ini.	3	50	916.85	5682.35	SLU 82	6.2	Si
fin.	3	-1155	905.69	5682.35	SLU 82	6.27	Si
ini.	3	193	979.74	5682.35	SLU 74	5.8	Si
fin.	3	-1348	959.25	5682.35	SLU 74	5.92	Si
ini.	3	199	1002.99	5682.35	SLU 77	5.67	Si
fin.	3	-1345	962.36	5682.35	SLU 77	5.9	Si

Verifiche a taglio delle travi in muratura secondo §C8.7.1.3.1 in combinazioni non sismiche

Sezione	γM	N	M	V	Vt	Vp	Vt fess. diag.	Vt,lim	Comb.	c.s.	Verifica
ini.	3	244	1005.76	42			2157	757	SLU 81	18.17	Si
fin.	3	-1353	997.46	5618			2698	1066	SLU 81	0.19	No
ini.	3	154	900.31	7			2157	777	SLU 60	106.07	Si
fin.	3	-1300	890.69	5129			2677	1057	SLU 60	0.21	No
ini.	3	109	897.54	-206			2157	788	SLU 56	3.83	Si
fin.	3	-1292	855.59	5000			2673	1056	SLU 56	0.21	No
ini.	3	159	923.56	-86			2157	776	SLU 62	8.99	Si
fin.	3	-1298	893.8	5146			2676	1057	SLU 62	0.21	No
ini.	3	199	1002.99	-171			2157	767	SLU 77	4.48	Si
fin.	3	-1345	962.36	5489			2695	1065	SLU 77	0.19	No
ini.	3	193	979.74	-78			2157	768	SLU 74	9.9	Si
fin.	3	-1348	959.25	5472			2696	1065	SLU 74	0.19	No
ini.	3	56	940.11	-860			2157	799	SLU 84	0.93	No
fin.	3	-1152	908.79	4925			2618	1032	SLU 84	0.21	No
ini.	3	250	1029.02	-52			2157	755	SLU 83	14.51	Si
fin.	3	-1351	1000.57	5635			2697	1066	SLU 83	0.19	No
ini.	3	200	999.95	-181			2157	767	SLU 79	4.24	Si
fin.	3	-1330	952.01	5417			2689	1062	SLU 79	0.2	No
ini.	3	50	916.85	-766			2157	801	SLU 82	1.04	Si
fin.	3	-1155	905.69	4908			2619	1033	SLU 82	0.21	No

Verifiche a pressoflessione delle travi in muratura in combinazioni sismiche

Sezione	γM	N	M	Mu	Comb.	c.s.	Verifica
ini.	2	1758	652.73	8523.53	SLV 11	13.06	Si
fin.	2	-931	1726.92	8523.53	SLV 11	4.94	Si
ini.	2	-1422	-606.75	8523.53	SLV 13	14.05	Si
fin.	2	-3234	1920.59	8523.53	SLV 13	4.44	Si
ini.	2	368	1700.62	8523.53	SLV 2	5.01	Si
fin.	2	842	-1013.63	8523.53	SLV 2	8.41	Si
ini.	2	-1422	-606.75	8523.53	SLV 14	14.05	Si
fin.	2	-3234	1920.59	8523.53	SLV 14	4.44	Si
ini.	2	-243	-398.18	8523.53	SLV 15	21.41	Si
fin.	2	-2829	2305.19	8523.53	SLV 15	3.7	Si
ini.	2	1546	1909.18	8523.53	SLV 3	4.46	Si
fin.	2	1246	-629.02	8523.53	SLV 3	13.55	Si
ini.	2	368	1700.62	8523.53	SLV 1	5.01	Si
fin.	2	842	-1013.63	8523.53	SLV 1	8.41	Si
ini.	2	1758	652.73	8523.53	SLV 12	13.06	Si
fin.	2	-931	1726.92	8523.53	SLV 12	4.94	Si
ini.	2	-243	-398.18	8523.53	SLV 16	21.41	Si
fin.	2	-2829	2305.19	8523.53	SLV 16	3.7	Si
ini.	2	1546	1909.18	8523.53	SLV 4	4.46	Si

Sezione	γM	N	M	Mu	Comb.	c.s.	Verifica
fin.	2	1246	-629.02	8523.53	SLV 4	13.55	Si

Verifiche a taglio delle travi in muratura secondo §C8.7.1.3.1 in combinazioni sismiche

Sezione	γM	N	M	V	Vt	Vp	Vt fess. diag.	Vt,lim	Comb.	c.s.	Verifica
ini.	2	-1422	-606.75	7676			3804	1495	SLV 14	0.19	No
fin.	2	-3234	1920.59	10645			4529	1787	SLV 14	0.17	No
ini.	2	368	1700.62	-10527			3235	1135	SLV 1	0.11	No
fin.	2	842	-1013.63	-4834			3235	1018	SLV 1	0.21	No
ini.	2	-243	-398.18	10442			3332	1269	SLV 15	0.12	No
fin.	2	-2829	2305.19	12371			4367	1726	SLV 15	0.14	No
ini.	2	1546	1909.18	-7761			3235	815	SLV 4	0.1	No
fin.	2	1246	-629.02	-3108			3235	907	SLV 4	0.29	No
ini.	2	-1422	-606.75	7676			3804	1495	SLV 13	0.19	No
fin.	2	-3234	1920.59	10645			4529	1787	SLV 13	0.17	No
ini.	2	1546	1909.18	-7761			3235	815	SLV 3	0.1	No
fin.	2	1246	-629.02	-3108			3235	907	SLV 3	0.29	No
ini.	2	1758	652.73	7298			3235	743	SLV 11	0.1	No
fin.	2	-931	1726.92	8966			3607	1405	SLV 11	0.16	No
ini.	2	-243	-398.18	10442			3332	1269	SLV 16	0.12	No
fin.	2	-2829	2305.19	12371			4367	1726	SLV 16	0.14	No
ini.	2	368	1700.62	-10527			3235	1135	SLV 2	0.11	No
fin.	2	842	-1013.63	-4834			3235	1018	SLV 2	0.21	No
ini.	2	1758	652.73	7298			3235	743	SLV 12	0.1	No
fin.	2	-931	1726.92	8966			3607	1405	SLV 12	0.16	No

Tabella dei coefficienti di sicurezza minimi

Stato limite	Coeff.s.	Comb.	Verifica
PF_SLV	3.698	SLV 15	Si
V_SLV	0.102	SLV 11	No
PF_SLU	5.522	SLU 83	Si
V_SLU	0.189	SLU 83	No

Trave di accoppiamento 72

Verifiche condotte secondo D.M. 17-01-18 (N.T.C.)

Dati geometrici

X ini.	Y ini.	Z ini.inf.	Z ini.sup.	H ini.	X fin.	Y fin.	Z fin.inf.	Z fin.sup	H fin.	Luce	Spessore	R. Trazione
-18.803	-3.254	7.15	7.9	0.75	-19.303	-3.254	7.15	7.9	0.75	0.5	0.28	30000

Caratteristiche del materiale

(Circolare 7 21-01-19 C8.5.I) Muratura in mattoni pieni e malta di calce LC2_Corti

fb_	fhk	fvk0	fhmedio	τ0	fv0	μ	ϕ	fvk,lim	E	G	FC
120000			172500	9000	20000	0.577	0.767	6500	320000000	128000000	1.2

Verifiche a pressoflessione delle travi in muratura in combinazioni non sismiche

Sezione	γM	N	M	Mu	Comb.	c.s.	Verifica
ini.	3	27	-84.62	799.08	SLU 81	9.44	Si
fin.	3	566	54.81	799.08	SLU 81	14.58	Si
ini.	3	39	-79.6	799.08	SLU 62	10.04	Si
fin.	3	509	41.18	799.08	SLU 62	19.4	Si
ini.	3	60	-77.03	799.08	SLU 58	10.37	Si
fin.	3	485	32.05	799.08	SLU 58	24.93	Si
ini.	3	68	-81.46	799.08	SLU 74	9.81	Si
fin.	3	573	49.21	799.08	SLU 74	16.24	Si
ini.	3	80	-76.44	799.08	SLU 56	10.45	Si
fin.	3	516	35.58	799.08	SLU 56	22.46	Si
ini.	3	42	-85.47	799.08	SLU 79	9.35	Si
fin.	3	533	38.21	799.08	SLU 79	20.92	Si
ini.	3	44	-76.19	799.08	SLU 60	10.49	Si
fin.	3	518	48.65	799.08	SLU 60	16.42	Si
ini.	3	62	-84.87	799.08	SLU 77	9.42	Si
fin.	3	564	41.73	799.08	SLU 77	19.15	Si
ini.	3	21	-88.03	799.08	SLU 83	9.08	Si
fin.	3	557	47.34	799.08	SLU 83	16.88	Si
ini.	3	-14	-77.26	799.08	SLU 41	10.34	Si
fin.	3	461	39.01	799.08	SLU 41	20.48	Si

Verifiche a taglio delle travi in muratura secondo §C8.7.1.3.1 in combinazioni non sismiche

Sezione	γM	N	M	V	Vt	Vp	Vt fess. diag.	Vt,lim	Comb.	c.s.	Verifica
ini.	3	62	-84.87	3440			809	290	SLU 77	0.08	No
fin.	3	564	41.73	-1747			809	134	SLU 77	0.08	No
ini.	3	21	-88.03	3510			809	300	SLU 83	0.09	No
fin.	3	557	47.34	-1719			809	138	SLU 83	0.08	No
ini.	3	147	-58.81	3166			809	270	SLU 75	0.09	No
fin.	3	505	22.27	-1918			809	161	SLU 75	0.08	No
ini.	3	42	-85.47	3389			809	295	SLU 79	0.09	No
fin.	3	533	38.21	-1729			809	149	SLU 79	0.09	No
ini.	3	121	-62.82	3162			809	277	SLU 80	0.09	No
fin.	3	465	11.26	-1964			809	176	SLU 80	0.09	No
ini.	3	142	-62.22	3213			809	272	SLU 78	0.08	No
fin.	3	496	14.79	-1982			809	164	SLU 78	0.08	No
ini.	3	106	-61.97	3236			809	280	SLU 82	0.09	No
fin.	3	498	27.87	-1890			809	163	SLU 82	0.09	No
ini.	3	27	-84.62	3463			809	298	SLU 81	0.09	No
fin.	3	566	54.81	-1655			809	133	SLU 81	0.08	No
ini.	3	68	-81.46	3394			809	289	SLU 74	0.09	No

Sezione	γM	N	M	V	Vt	Vp	Vt fess. diag.	Vt,lim	Comb.	c.s.	Verifica
fin.	3	573	49.21	-1683			809	130	SLU 74	0.08	No
ini.	3	100	-65.38	3283			809	282	SLU 84	0.09	No
fin.	3	489	20.4	-1954			809	167	SLU 84	0.09	No

Verifiche a pressoflessione delle travi in muratura in combinazioni sismiche

Sezione	γM	N	M	Mu	Comb.	c.s.	Verifica
ini.	2	-2601	-257.63	1198.62	SLV 2	4.65	Si
fin.	2	-4030	-982.47	1198.62	SLV 2	1.22	Si
ini.	2	3486	303.05	1198.62	SLV 14	3.96	Si
fin.	2	4639	974.25	1198.62	SLV 14	1.23	Si
ini.	2	2751	153.8	1198.62	SLV 16	7.79	Si
fin.	2	4826	1057.79	1198.62	SLV 16	1.13	Si
ini.	2	-3335	-406.89	1198.62	SLV 4	2.95	Si
fin.	2	-3843	-898.92	1198.62	SLV 4	1.33	Si
ini.	2	2751	153.8	1198.62	SLV 15	7.79	Si
fin.	2	4826	1057.79	1198.62	SLV 15	1.13	Si
ini.	2	-3335	-406.89	1198.62	SLV 3	2.95	Si
fin.	2	-3843	-898.92	1198.62	SLV 3	1.33	Si
ini.	2	-236	-216.57	1198.62	SLV 12	5.53	Si
fin.	2	2011	470.42	1198.62	SLV 12	2.55	Si
ini.	2	3486	303.05	1198.62	SLV 13	3.96	Si
fin.	2	4639	974.25	1198.62	SLV 13	1.23	Si
ini.	2	-2601	-257.63	1198.62	SLV 1	4.65	Si
fin.	2	-4030	-982.47	1198.62	SLV 1	1.22	Si
ini.	2	-236	-216.57	1198.62	SLV 11	5.53	Si
fin.	2	2011	470.42	1198.62	SLV 11	2.55	Si

Verifiche a taglio delle travi in muratura secondo §C8.7.1.3.1 in combinazioni sismiche

Sezione	γM	N	M	V	Vt	Vp	Vt fess. diag.	Vt,lim	Comb.	c.s.	Verifica
ini.	2	2213	280.94	1554			1213	0	SLV 9	0	No
fin.	2	1386	191.92	-2355			1213	0	SLV 9	0	No
ini.	2	-236	-216.57	4313			1308	505	SLV 12	0.12	No
fin.	2	2011	470.42	1825			1213	0	SLV 12	0	No
ini.	2	387	112.74	228			1213	363	SLV 6	1.59	Si
fin.	2	-1214	-395.09	-4101			1699	670	SLV 6	0.16	No
ini.	2	2751	153.8	4895			1213	0	SLV 15	0	No
fin.	2	4826	1057.79	2400			1213	0	SLV 15	0	No
ini.	2	-236	-216.57	4313			1308	505	SLV 11	0.12	No
fin.	2	2011	470.42	1825			1213	0	SLV 11	0	No
ini.	2	2213	280.94	1554			1213	0	SLV 10	0	No
fin.	2	1386	191.92	-2355			1213	0	SLV 10	0	No
ini.	2	2751	153.8	4895			1213	0	SLV 16	0	No
fin.	2	4826	1057.79	2400			1213	0	SLV 16	0	No
ini.	2	3486	303.05	4067			1213	0	SLV 14	0	No
fin.	2	4639	974.25	1146			1213	0	SLV 14	0	No
ini.	2	3486	303.05	4067			1213	0	SLV 13	0	No
fin.	2	4639	974.25	1146			1213	0	SLV 13	0	No
ini.	2	387	112.74	228			1213	363	SLV 5	1.59	Si
fin.	2	-1214	-395.09	-4101			1699	670	SLV 5	0.16	No

Tabella dei coefficienti di sicurezza minimi

Stato limite	Coeff.s.	Comb.	Verifica
PF_SLV	1.133	SLV 15	Si
V_SLV	0	SLV 9	No
PF_SLU	9.077	SLU 83	Si
V_SLU	0.077	SLU 77	No

Trave di accoppiamento 73

Verifiche condotte secondo D.M. 17-01-18 (N.T.C.)

Dati geometrici

X ini.	Y ini.	Z ini.inf.	Z ini.sup.	H ini.	X fin.	Y fin.	Z fin.inf.	Z fin.sup	H fin.	Luce	Spessore	R. Trazione
-17.275	-3.254	4.35	5.25	0.9	-18.275	-3.254	4.35	5.25	0.9	1	0.28	30000

Caratteristiche del materiale

(Circolare 7 21-01-19 C8.5.I) Muratura in mattoni pieni e malta di calce LC2_Corti

fb_	fhk	fvk0	fhmedio	τ0	fv0	μ	ϕ	fvk,lim	E	G	FC
120000			172500	9000	20000	0.577	0.767	6500	320000000	128000000	1.2

Verifiche a pressoflessione delle travi in muratura in combinazioni non sismiche

Sezione	γM	N	M	Mu	Comb.	c.s.	Verifica
ini.	3	160	-116.44	1150.68	SLU 76	9.88	Si
fin.	3	66	312.95	1150.68	SLU 76	3.68	Si
ini.	3	215	-111.45	1150.68	SLU 78	10.32	Si
fin.	3	184	305.7	1150.68	SLU 78	3.76	Si
ini.	3	234	-119.68	1150.68	SLU 84	9.61	Si
fin.	3	218	308.16	1150.68	SLU 84	3.73	Si
ini.	3	246	-132.28	1150.68	SLU 82	8.7	Si
fin.	3	194	313.8	1150.68	SLU 82	3.67	Si
ini.	3	117	-118.73	1150.68	SLU 65	9.69	Si
fin.	3	-84	309.34	1150.68	SLU 65	3.72	Si
ini.	3	321	-130.51	1150.68	SLU 81	8.82	Si
fin.	3	343	300.67	1150.68	SLU 81	3.83	Si
ini.	3	105	-106.12	1150.68	SLU 68	10.84	Si
fin.	3	-59	303.7	1150.68	SLU 68	3.79	Si
ini.	3	227	-124.06	1150.68	SLU 75	9.28	Si

Sezione	γM	N	M	Mu	Comb.	c.s.	Verifica
fin.	3	160	311.34	1150.68	SLU 75	3.7	Si
ini.	3	172	-113.74	1150.68	SLU 67	10.12	Si
fin.	3	35	302.09	1150.68	SLU 67	3.81	Si
ini.	3	172	-129.04	1150.68	SLU 73	8.92	Si
fin.	3	41	318.59	1150.68	SLU 73	3.61	Si

Verifiche a taglio delle travi in muratura secondo §C8.7.1.3.1 in combinazioni non sismiche

Sezione	γM	N	M	V	Vt	Vp	Vt fess. diag.	Vt,lim	Comb.	c.s.	Verifica
ini.	3	321	-130.51	-826			873	258	SLU 81	0.31	No
fin.	3	343	300.67	2468			873	253	SLU 81	0.1	No
ini.	3	274	-100.89	-935			873	270	SLU 79	0.29	No
fin.	3	338	285.43	2444			873	254	SLU 79	0.1	No
ini.	3	290	-109.68	-922			873	266	SLU 77	0.29	No
fin.	3	333	292.57	2490			873	255	SLU 77	0.1	No
ini.	3	215	-111.45	-872			873	284	SLU 78	0.33	No
fin.	3	184	305.7	2523			873	290	SLU 78	0.12	No
ini.	3	302	-122.29	-850			873	263	SLU 74	0.31	No
fin.	3	309	298.21	2478			873	261	SLU 74	0.11	No
ini.	3	246	-132.28	-776			873	276	SLU 82	0.36	No
fin.	3	194	313.8	2501			873	288	SLU 82	0.12	No
ini.	3	242	-99.2	-860			873	277	SLU 62	0.32	No
fin.	3	281	273.7	2322			873	268	SLU 62	0.12	No
ini.	3	309	-117.91	-897			873	261	SLU 83	0.29	No
fin.	3	367	295.03	2481			873	247	SLU 83	0.1	No
ini.	3	234	-119.68	-847			873	279	SLU 84	0.33	No
fin.	3	218	308.16	2514			873	283	SLU 84	0.11	No
ini.	3	198	-102.66	-885			873	287	SLU 80	0.32	No
fin.	3	189	298.56	2477			873	289	SLU 80	0.12	No

Verifiche a pressoflessione delle travi in muratura in combinazioni sismiche

Sezione	γM	N	M	Mu	Comb.	c.s.	Verifica
ini.	2	-2718	2260.8	1726.01	SLV 3	0.76	No
fin.	2	3763	-1548.03	1726.01	SLV 3	1.11	Si
ini.	2	1082	-1265.43	1726.01	SLV 10	1.36	Si
fin.	2	-2882	1509.09	1726.01	SLV 10	1.14	Si
ini.	2	3093	-2436.58	1726.01	SLV 14	0.71	No
fin.	2	-3476	1986.18	1726.01	SLV 14	0.87	No
ini.	2	-2718	2260.8	1726.01	SLV 4	0.76	No
fin.	2	3763	-1548.03	1726.01	SLV 4	1.11	Si
ini.	2	3078	-2124.76	1726.01	SLV 16	0.81	No
fin.	2	-2198	1485.15	1726.01	SLV 16	1.16	Si
ini.	2	3093	-2436.58	1726.01	SLV 13	0.71	No
fin.	2	-3476	1986.18	1726.01	SLV 13	0.87	No
ini.	2	1082	-1265.43	1726.01	SLV 9	1.36	Si
fin.	2	-2882	1509.09	1726.01	SLV 9	1.14	Si
ini.	2	-2703	1948.97	1726.01	SLV 1	0.89	No
fin.	2	2484	-1047.01	1726.01	SLV 1	1.65	Si
ini.	2	3078	-2124.76	1726.01	SLV 15	0.81	No
fin.	2	-2198	1485.15	1726.01	SLV 15	1.16	Si
ini.	2	-2703	1948.97	1726.01	SLV 2	0.89	No
fin.	2	2484	-1047.01	1726.01	SLV 2	1.65	Si

Verifiche a taglio delle travi in muratura secondo §C8.7.1.3.1 in combinazioni sismiche

Sezione	γM	N	M	V	Vt	Vp	Vt fess. diag.	Vt,lim	Comb.	c.s.	Verifica
ini.	2	1032	-226.03	-990			1310	210	SLV 11	0.21	No
fin.	2	1380	-160.99	267			1310	0	SLV 11	0	No
ini.	2	1032	-226.03	-990			1310	210	SLV 12	0.21	No
fin.	2	1380	-160.99	267			1310	0	SLV 12	0	No
ini.	2	-2703	1948.97	-7064			2283	874	SLV 1	0.12	No
fin.	2	2484	-1047.01	-2929			1310	0	SLV 1	0	No
ini.	2	-2703	1948.97	-7064			2283	874	SLV 2	0.12	No
fin.	2	2484	-1047.01	-2929			1310	0	SLV 2	0	No
ini.	2	-707	1089.64	-5361			1565	616	SLV 8	0.11	No
fin.	2	3168	-1070.95	-3128			1310	0	SLV 8	0	No
ini.	2	3093	-2436.58	7503			1310	0	SLV 13	0	No
fin.	2	-3476	1986.18	8387			2562	956	SLV 13	0.11	No
ini.	2	3093	-2436.58	7503			1310	0	SLV 14	0	No
fin.	2	-3476	1986.18	8387			2562	956	SLV 14	0.11	No
ini.	2	-707	1089.64	-5361			1565	616	SLV 7	0.11	No
fin.	2	3168	-1070.95	-3128			1310	0	SLV 7	0	No
ini.	2	-2718	2260.8	-8631			2289	876	SLV 3	0.1	No
fin.	2	3763	-1548.03	-4849			1310	0	SLV 3	0	No
ini.	2	-2718	2260.8	-8631			2289	876	SLV 4	0.1	No
fin.	2	3763	-1548.03	-4849			1310	0	SLV 4	0	No

Tabella dei coefficienti di sicurezza minimi

Stato limite	Coeff.s.	Comb.	Verifica
PF_SLV	0.708	SLV 13	No
V_SLV	0	SLV 1	No
PF_SLU	3.612	SLU 73	Si
V_SLU	0.099	SLU 83	No

Trave di accoppiamento 74

Verifiche condotte secondo D.M. 17-01-18 (N.T.C.)

Dati geometrici

X ini.	Y ini.	Z ini.inf.	Z ini.sup.	H ini.	X fin.	Y fin.	Z fin.inf.	Z fin.sup	H fin.	Luce	Spessore	R. Trazione
-17.275	-3.254	7.15	7.9	0.75	-18.275	-3.254	7.15	7.9	0.75	1	0.28	30000

Caratteristiche del materiale

(Circolare 7 21-01-19 C8.5.I) Muratura in mattoni pieni e malta di calce LC2_Corti

fb_	fhk	fvk0	fhmedio	τ0	fv0	μ	ϕ	fvk,lim	E	G	FC
120000			172500	9000	20000	0.577	0.767	6500	320000000	128000000	1.2

Verifiche a pressoflessione delle travi in muratura in combinazioni non sismiche

Sezione	γM	N	M	Mu	Comb.	c.s.	Verifica
ini.	3	94	-5.86	799.08	SLU 59	136.46	Si
fin.	3	114	-70.49	799.08	SLU 59	11.34	Si
ini.	3	155	7.88	799.08	SLU 77	101.44	Si
fin.	3	167	-71.12	799.08	SLU 77	11.24	Si
ini.	3	66	1.88	799.08	SLU 84	425.81	Si
fin.	3	121	-73.39	799.08	SLU 84	10.89	Si
ini.	3	87	11.37	799.08	SLU 38	70.27	Si
fin.	3	67	-73.85	799.08	SLU 38	10.82	Si
ini.	3	99	2.67	799.08	SLU 80	299.72	Si
fin.	3	117	-77.74	799.08	SLU 80	10.28	Si
ini.	3	141	18.54	799.08	SLU 37	43.1	Si
fin.	3	92	-70.81	799.08	SLU 37	11.29	Si
ini.	3	87	9.42	799.08	SLU 36	84.87	Si
fin.	3	92	-70.28	799.08	SLU 36	11.37	Si
ini.	3	154	9.83	799.08	SLU 79	81.25	Si
fin.	3	142	-74.7	799.08	SLU 79	10.7	Si
ini.	3	100	0.71	799.08	SLU 78	1127.12	Si
fin.	3	142	-74.17	799.08	SLU 78	10.77	Si
ini.	3	121	9.04	799.08	SLU 83	88.35	Si
fin.	3	146	-70.34	799.08	SLU 83	11.36	Si

Verifiche a taglio delle travi in muratura secondo §C8.7.1.3.1 in combinazioni non sismiche

Sezione	γM	N	M	V	Vt	Vp	Vt fess. diag.	Vt,lim	Comb.	c.s.	Verifica
ini.	3	28	-5.31	1685			607	224	SLU 82	0.13	No
fin.	3	141	-61.28	-2191			607	204	SLU 82	0.09	No
ini.	3	99	2.67	1620			607	212	SLU 80	0.13	No
fin.	3	117	-77.74	-2237			607	208	SLU 80	0.09	No
ini.	3	83	1.86	1695			607	214	SLU 81	0.13	No
fin.	3	167	-58.23	-2229			607	199	SLU 81	0.09	No
ini.	3	121	9.04	1687			607	208	SLU 83	0.12	No
fin.	3	146	-70.34	-2313			607	203	SLU 83	0.09	No
ini.	3	62	-6.48	1655			607	218	SLU 75	0.13	No
fin.	3	163	-62.06	-2159			607	200	SLU 75	0.09	No
ini.	3	117	0.69	1664			607	208	SLU 74	0.13	No
fin.	3	188	-59.02	-2197			607	195	SLU 74	0.09	No
ini.	3	100	0.71	1648			607	211	SLU 78	0.13	No
fin.	3	142	-74.17	-2242			607	204	SLU 78	0.09	No
ini.	3	154	9.83	1629			607	202	SLU 79	0.12	No
fin.	3	142	-74.7	-2276			607	204	SLU 79	0.09	No
ini.	3	155	7.88	1657			607	201	SLU 77	0.12	No
fin.	3	167	-71.12	-2280			607	199	SLU 77	0.09	No
ini.	3	66	1.88	1678			607	217	SLU 84	0.13	No
fin.	3	121	-73.39	-2274			607	208	SLU 84	0.09	No

Verifiche a pressoflessione delle travi in muratura in combinazioni sismiche

Sezione	γM	N	M	Mu	Comb.	c.s.	Verifica
ini.	2	-2029	-985.65	1198.62	SLV 13	1.22	Si
fin.	2	5324	1458.61	1198.62	SLV 13	0.82	No
ini.	2	1369	491.37	1198.62	SLV 2	2.44	Si
fin.	2	-4302	-1272.51	1198.62	SLV 2	0.94	No
ini.	2	2134	960.48	1198.62	SLV 4	1.25	Si
fin.	2	-5003	-1515.62	1198.62	SLV 4	0.79	No
ini.	2	-1264	-516.54	1198.62	SLV 15	2.32	Si
fin.	2	4623	1215.5	1198.62	SLV 15	0.99	No
ini.	2	-2029	-985.65	1198.62	SLV 14	1.22	Si
fin.	2	5324	1458.61	1198.62	SLV 14	0.82	No
ini.	2	-1732	-1015.98	1198.62	SLV 9	1.18	Si
fin.	2	2772	786.35	1198.62	SLV 9	1.52	Si
ini.	2	2134	960.48	1198.62	SLV 3	1.25	Si
fin.	2	-5003	-1515.62	1198.62	SLV 3	0.79	No
ini.	2	-1264	-516.54	1198.62	SLV 16	2.32	Si
fin.	2	4623	1215.5	1198.62	SLV 16	0.99	No
ini.	2	1369	491.37	1198.62	SLV 1	2.44	Si
fin.	2	-4302	-1272.51	1198.62	SLV 1	0.94	No
ini.	2	-1732	-1015.98	1198.62	SLV 10	1.18	Si
fin.	2	2772	786.35	1198.62	SLV 10	1.52	Si

Verifiche a taglio delle travi in muratura secondo §C8.7.1.3.1 in combinazioni sismiche

Sezione	γM	N	M	V	Vt	Vp	Vt fess. diag.	Vt,lim	Comb.	c.s.	Verifica
ini.	2	-1732	-1015.98	3708			1429	557	SLV 9	0.15	No
fin.	2	2772	786.35	1688			910	0	SLV 9	0	No
ini.	2	-2029	-985.65	5092			1518	586	SLV 13	0.12	No
fin.	2	5324	1458.61	4238			910	0	SLV 13	0	No
ini.	2	-1732	-1015.98	3708			1429	557	SLV 10	0.15	No
fin.	2	2772	786.35	1688			910	0	SLV 10	0	No
ini.	2	1369	491.37	-1842			910	0	SLV 2	0	No
fin.	2	-4302	-1272.51	-6175			2200	773	SLV 2	0.13	No
ini.	2	1837	990.82	-1353			910	0	SLV 8	0	No
fin.	2	-2452	-843.36	-4564			1646	625	SLV 8	0.14	No

Sezione	γM	N	M	V	Vt	Vp	Vt fess. diag.	Vt,lim	Comb.	c.s.	Verifica
ini.	2	2134	960.48	-2736			910	0	SLV 3	0	No
fin.	2	-5003	-1515.62	-7113			2411	822	SLV 3	0.12	No
ini.	2	1837	990.82	-1353			910	0	SLV 7	0	No
fin.	2	-2452	-843.36	-4564			1646	625	SLV 7	0.14	No
ini.	2	1369	491.37	-1842			910	0	SLV 1	0	No
fin.	2	-4302	-1272.51	-6175			2200	773	SLV 1	0.13	No
ini.	2	-2029	-985.65	5092			1518	586	SLV 14	0.12	No
fin.	2	5324	1458.61	4238			910	0	SLV 14	0	No
ini.	2	2134	960.48	-2736			910	0	SLV 4	0	No
fin.	2	-5003	-1515.62	-7113			2411	822	SLV 4	0.12	No

Tabella dei coefficienti di sicurezza minimi

Stato limite	Coeff.s.	Comb.	Verifica
PF_SLV	0.791	SLV 3	No
V_SLV	0	SLV 1	No
PF_SLU	10.278	SLU 80	Si
V_SLU	0.087	SLU 77	No

Trave di accoppiamento 75

Verifiche condotte secondo D.M. 17-01-18 (N.T.C.)

Dati geometrici

X ini.	Y ini.	Z ini.inf.	Z ini.sup.	H ini.	X fin.	Y fin.	Z fin.inf.	Z fin.sup	H fin.	Luce	Spessore	R. Trazione
-19.595	1.283	6.45	7.9	1.45	-19.595	1.983	6.45	7.9	1.45	0.7	0.14	30000

Caratteristiche del materiale

(Circolare 7 21-01-19 C8.5.I) Muratura in mattoni pieni e malta di calce LC2_Corti

fb_	fhk	fvk0	fhmedio	τ0	fv0	μ	ϕ	fvk,lim	E	G	FC
120000			172500	9000	20000	0.577	0.767	6500	320000000	128000000	1.2

Verifiche a pressoflessione delle travi in muratura in combinazioni non sismiche

Sezione	γM	N	M	Mu	Comb.	c.s.	Verifica
ini.	3	-70	-73.08	1493.39	SLU 83	20.43	Si
fin.	3	-70	-455.79	1493.39	SLU 83	3.28	Si
ini.	3	-68	-72.07	1493.39	SLU 81	20.72	Si
fin.	3	-68	-448.95	1493.39	SLU 81	3.33	Si
ini.	3	-82	-61.8	1493.39	SLU 36	24.17	Si
fin.	3	-82	-420.06	1493.39	SLU 36	3.56	Si
ini.	3	-81	-73.2	1493.39	SLU 42	20.4	Si
fin.	3	-81	-518.51	1493.39	SLU 42	2.88	Si
ini.	3	-89	-68.53	1493.39	SLU 84	21.79	Si
fin.	3	-89	-449.72	1493.39	SLU 84	3.32	Si
ini.	3	-62	-77.75	1493.39	SLU 41	19.21	Si
fin.	3	-62	-524.58	1493.39	SLU 41	2.85	Si
ini.	3	-78	-72.18	1493.39	SLU 40	20.69	Si
fin.	3	-78	-511.67	1493.39	SLU 40	2.92	Si
ini.	3	-87	-67.51	1493.39	SLU 82	22.12	Si
fin.	3	-87	-442.88	1493.39	SLU 82	3.37	Si
ini.	3	-63	-66.35	1493.39	SLU 35	22.51	Si
fin.	3	-63	-426.13	1493.39	SLU 35	3.5	Si
ini.	3	-59	-76.74	1493.39	SLU 39	19.46	Si
fin.	3	-59	-517.74	1493.39	SLU 39	2.88	Si

Verifiche a taglio delle travi in muratura secondo §C8.7.1.3.1 in combinazioni non sismiche

Sezione	γM	N	M	V	Vt	Vp	Vt fess. diag.	Vt,lim	Comb.	c.s.	Verifica
ini.	3	-62	-77.75	-506			806	307	SLU 41	0.61	No
fin.	3	-62	-524.58	-782			806	307	SLU 41	0.39	No
ini.	3	-60	-65.33	-373			806	307	SLU 32	0.82	No
fin.	3	-60	-419.29	-650			806	307	SLU 32	0.47	No
ini.	3	-89	-68.53	-378			818	313	SLU 84	0.83	No
fin.	3	-89	-449.72	-729			818	313	SLU 84	0.43	No
ini.	3	-70	-73.08	-380			810	309	SLU 83	0.81	No
fin.	3	-70	-455.79	-731			810	309	SLU 83	0.42	No
ini.	3	-68	-72.07	-372			809	309	SLU 81	0.83	No
fin.	3	-68	-448.95	-722			809	309	SLU 81	0.43	No
ini.	3	-78	-72.18	-495			813	311	SLU 40	0.63	No
fin.	3	-78	-511.67	-772			813	311	SLU 40	0.4	No
ini.	3	-63	-66.35	-381			807	308	SLU 35	0.81	No
fin.	3	-63	-426.13	-658			807	308	SLU 35	0.47	No
ini.	3	-87	-67.51	-370			816	312	SLU 82	0.85	No
fin.	3	-87	-442.88	-720			816	312	SLU 82	0.43	No
ini.	3	-81	-73.2	-503			814	311	SLU 42	0.62	No
fin.	3	-81	-518.51	-780			814	311	SLU 42	0.4	No
ini.	3	-59	-76.74	-497			805	307	SLU 39	0.62	No
fin.	3	-59	-517.74	-774			805	307	SLU 39	0.4	No

Verifiche a pressoflessione delle travi in muratura in combinazioni sismiche

Sezione	γM	N	M	Mu	Comb.	c.s.	Verifica
ini.	2	-477	-771.21	2240.09	SLV 3	2.9	Si
fin.	2	-1244	-4338.56	2240.09	SLV 3	0.52	No
ini.	2	1271	513.24	2240.09	SLV 10	4.36	Si
fin.	2	1093	7231.09	2240.09	SLV 10	0.31	No
ini.	2	1245	127.21	2240.09	SLV 5	17.61	Si
fin.	2	526	5874.5	2240.09	SLV 5	0.38	No
ini.	2	-1358	-562.08	2240.09	SLV 8	3.99	Si
fin.	2	-1180	-7402.99	2240.09	SLV 8	0.3	No

Sezione	γM	N	M	Mu	Comb.	c.s.	Verifica
ini.	2	-1358	-562.08	2240.09	SLV 7	3.99	Si
fin.	2	-1180	-7402.99	2240.09	SLV 7	0.3	No
ini.	2	-477	-771.21	2240.09	SLV 4	2.9	Si
fin.	2	-1244	-4338.56	2240.09	SLV 4	0.52	No
ini.	2	1245	127.21	2240.09	SLV 6	17.61	Si
fin.	2	526	5874.5	2240.09	SLV 6	0.38	No
ini.	2	-1332	-176.04	2240.09	SLV 12	12.72	Si
fin.	2	-613	-6046.4	2240.09	SLV 12	0.37	No
ini.	2	-1332	-176.04	2240.09	SLV 11	12.72	Si
fin.	2	-613	-6046.4	2240.09	SLV 11	0.37	No
ini.	2	1271	513.24	2240.09	SLV 9	4.36	Si
fin.	2	1093	7231.09	2240.09	SLV 9	0.31	No

Verifiche a taglio delle travi in muratura secondo §C8.7.1.3.1 in combinazioni sismiche

Sezione	γM	N	M	V	Vt	Vp	Vt fess. diag.	Vt,lim	Comb.	c.s.	Verifica
ini.	2	1245	127.21	8517			1173	0	SLV 6	0	No
fin.	2	526	5874.5	7976			1173	306	SLV 6	0.04	No
ini.	2	390	722.37	4372			1173	346	SLV 13	0.08	No
fin.	2	1157	4166.66	4966			1173	0	SLV 13	0	No
ini.	2	1245	127.21	8517			1173	0	SLV 5	0	No
fin.	2	526	5874.5	7976			1173	306	SLV 5	0.04	No
ini.	2	-1358	-562.08	-9425			1716	675	SLV 8	0.07	No
fin.	2	-1180	-7402.99	-9937			1645	649	SLV 8	0.07	No
ini.	2	390	722.37	4372			1173	346	SLV 14	0.08	No
fin.	2	1157	4166.66	4966			1173	0	SLV 14	0	No
ini.	2	1271	513.24	9502			1173	0	SLV 9	0	No
fin.	2	1093	7231.09	9480			1173	0	SLV 9	0	No
ini.	2	-1358	-562.08	-9425			1716	675	SLV 7	0.07	No
fin.	2	-1180	-7402.99	-9937			1645	649	SLV 7	0.07	No
ini.	2	-1332	-176.04	-8440			1706	671	SLV 12	0.08	No
fin.	2	-613	-6046.4	-8432			1418	559	SLV 12	0.07	No
ini.	2	-1332	-176.04	-8440			1706	671	SLV 11	0.08	No
fin.	2	-613	-6046.4	-8432			1418	559	SLV 11	0.07	No
ini.	2	1271	513.24	9502			1173	0	SLV 10	0	No
fin.	2	1093	7231.09	9480			1173	0	SLV 10	0	No

Tabella dei coefficienti di sicurezza minimi

Stato limite	Coeff.s.	Comb.	Verifica
PF_SLV	0.303	SLV 7	No
V_SLV	0	SLV 5	No
PF_SLU	2.847	SLU 41	Si
V_SLU	0.393	SLU 41	No

Trave di accoppiamento 76

Verifiche condotte secondo D.M. 17-01-18 (N.T.C.)

Dati geometrici

X ini.	Y ini.	Z ini.inf.	Z ini.sup.	H ini.	X fin.	Y fin.	Z fin.inf.	Z fin.sup	H fin.	Luce	Spessore	R. Trazione
-18.448	0.055	6.45	7.9	1.45	-18.448	0.855	6.45	7.9	1.45	0.8	0.14	30000

Caratteristiche del materiale

(Circolare 7 21-01-19 C8.5.I) Muratura in mattoni pieni e malta di calce LC2_Corti

fb_	fhk	fvk0	fhmedio	τ0	fv0	μ	ϕ	fvk,lim	E	G	FC
120000			172500	9000	20000	0.577	0.767	6500	320000000	128000000	1.2

Verifiche a pressoflessione delle travi in muratura in combinazioni non sismiche

Sezione	γM	N	M	Mu	Comb.	c.s.	Verifica
ini.	3	-926	-496.83	1493.39	SLU 82	3.01	Si
fin.	3	-123	188.42	1493.39	SLU 82	7.93	Si
ini.	3	-1004	-536.68	1493.39	SLU 34	2.78	Si
fin.	3	-151	154.34	1493.39	SLU 34	9.68	Si
ini.	3	-938	-497.4	1493.39	SLU 84	3	Si
fin.	3	-123	193.06	1493.39	SLU 84	7.74	Si
ini.	3	-1031	-557.44	1493.39	SLU 76	2.68	Si
fin.	3	-141	182.31	1493.39	SLU 76	8.19	Si
ini.	3	-911	-476.64	1493.39	SLU 42	3.13	Si
fin.	3	-132	165.09	1493.39	SLU 42	9.05	Si
ini.	3	-889	-495.81	1493.39	SLU 52	3.01	Si
fin.	3	-116	158.03	1493.39	SLU 52	9.45	Si
ini.	3	-899	-476.07	1493.39	SLU 40	3.14	Si
fin.	3	-133	160.45	1493.39	SLU 40	9.31	Si
ini.	3	-992	-536.11	1493.39	SLU 31	2.79	Si
fin.	3	-151	149.7	1493.39	SLU 31	9.98	Si
ini.	3	-1019	-556.87	1493.39	SLU 73	2.68	Si
fin.	3	-141	177.67	1493.39	SLU 73	8.41	Si
ini.	3	-901	-496.38	1493.39	SLU 55	3.01	Si
fin.	3	-116	162.68	1493.39	SLU 55	9.18	Si

Verifiche a taglio delle travi in muratura secondo §C8.7.1.3.1 in combinazioni non sismiche

Sezione	γM	N	M	V	Vt	Vp	Vt fess. diag.	Vt,lim	Comb.	c.s.	Verifica
ini.	3	-677	-349.62	3780			1053	416	SLU 83	0.11	No
fin.	3	-69	196.39	-865			809	309	SLU 83	0.36	No
ini.	3	-609	-310.02	3703			1025	406	SLU 77	0.11	No
fin.	3	-51	195.08	-984			802	305	SLU 77	0.31	No
ini.	3	-858	-457.23	4023			1125	443	SLU 75	0.11	No
fin.	3	-104	187.11	-591			823	316	SLU 75	0.53	No

Sezione	γM	N	M	V	Vt	Vp	Vt fess. diag.	Vt,lim	Comb.	c.s.	Verifica
ini.	3	-926	-496.83	4099			1152	453	SLU 82	0.11	No
fin.	3	-123	188.42	-471			831	320	SLU 82	0.68	No
ini.	3	-1019	-556.87	4164			1189	466	SLU 73	0.11	No
fin.	3	-141	177.67	-286			838	323	SLU 73	1.13	Si
ini.	3	-1031	-557.44	4259			1194	467	SLU 76	0.11	No
fin.	3	-141	182.31	-332			838	323	SLU 76	0.98	No
ini.	3	-938	-497.4	4194			1157	455	SLU 84	0.11	No
fin.	3	-123	193.06	-517			831	320	SLU 84	0.62	No
ini.	3	-870	-457.8	4118			1130	445	SLU 78	0.11	No
fin.	3	-104	191.76	-636			823	316	SLU 78	0.5	No
ini.	3	-869	-459.49	4078			1129	445	SLU 80	0.11	No
fin.	3	-105	189.17	-609			824	316	SLU 80	0.52	No
ini.	3	-608	-311.7	3663			1025	405	SLU 79	0.11	No
fin.	3	-52	192.5	-957			802	305	SLU 79	0.32	No

Verifiche a pressoflessione delle travi in muratura in combinazioni sismiche

Sezione	γM	N	M	Mu	Comb.	c.s.	Verifica
ini.	2	-5177	-2348.76	2240.09	SLV 9	0.95	No
fin.	2	-1642	-10.94	2240.09	SLV 9	204.73	Si
ini.	2	-3137	-1646.45	2240.09	SLV 14	1.36	Si
fin.	2	-1259	2.71	2240.09	SLV 14	828.01	Si
ini.	2	4519	1984.64	2240.09	SLV 8	1.13	Si
fin.	2	1611	264.9	2240.09	SLV 8	8.46	Si
ini.	2	-5177	-2348.76	2240.09	SLV 10	0.95	No
fin.	2	-1642	-10.94	2240.09	SLV 10	204.73	Si
ini.	2	-4285	-1811.81	2240.09	SLV 5	1.24	Si
fin.	2	-1144	43.72	2240.09	SLV 5	51.24	Si
ini.	2	3627	1447.69	2240.09	SLV 12	1.55	Si
fin.	2	1114	210.24	2240.09	SLV 12	10.65	Si
ini.	2	-4285	-1811.81	2240.09	SLV 6	1.24	Si
fin.	2	-1144	43.72	2240.09	SLV 6	51.24	Si
ini.	2	-3137	-1646.45	2240.09	SLV 13	1.36	Si
fin.	2	-1259	2.71	2240.09	SLV 13	828.01	Si
ini.	2	4519	1984.64	2240.09	SLV 7	1.13	Si
fin.	2	1611	264.9	2240.09	SLV 7	8.46	Si
ini.	2	3627	1447.69	2240.09	SLV 11	1.55	Si
fin.	2	1114	210.24	2240.09	SLV 11	10.65	Si

Verifiche a taglio delle travi in muratura secondo §C8.7.1.3.1 in combinazioni sismiche

Sezione	γM	N	M	V	Vt	Vp	Vt fess. diag.	Vt,lim	Comb.	c.s.	Verifica
ini.	2	-5177	-2348.76	8120			3243	1090	SLV 9	0.13	No
fin.	2	-1642	-10.94	4722			1830	714	SLV 9	0.15	No
ini.	2	2479	1282.33	-867			1173	0	SLV 4	0	No
fin.	2	1228	251.25	-2801			1173	0	SLV 4	0	No
ini.	2	-4285	-1811.81	7152			2887	1008	SLV 5	0.14	No
fin.	2	-1144	43.72	4427			1630	644	SLV 5	0.15	No
ini.	2	-5177	-2348.76	8120			3243	1090	SLV 10	0.13	No
fin.	2	-1642	-10.94	4722			1830	714	SLV 10	0.15	No
ini.	2	4519	1984.64	-3448			1173	0	SLV 8	0	No
fin.	2	1611	264.9	-6164			1173	0	SLV 8	0	No
ini.	2	3627	1447.69	-2480			1173	0	SLV 12	0	No
fin.	2	1114	210.24	-5869			1173	0	SLV 12	0	No
ini.	2	3627	1447.69	-2480			1173	0	SLV 11	0	No
fin.	2	1114	210.24	-5869			1173	0	SLV 11	0	No
ini.	2	4519	1984.64	-3448			1173	0	SLV 7	0	No
fin.	2	1611	264.9	-6164			1173	0	SLV 7	0	No
ini.	2	-4285	-1811.81	7152			2887	1008	SLV 6	0.14	No
fin.	2	-1144	43.72	4427			1630	644	SLV 6	0.15	No
ini.	2	2479	1282.33	-867			1173	0	SLV 3	0	No
fin.	2	1228	251.25	-2801			1173	0	SLV 3	0	No

Tabella dei coefficienti di sicurezza minimi

Stato limite	Coeff.s.	Comb.	Verifica
PF_SLV	0.954	SLV 9	No
V_SLV	0	SLV 3	No
PF_SLU	2.679	SLU 76	Si
V_SLU	0.108	SLU 78	No

Trave di accoppiamento 77

Verifiche condotte secondo D.M. 17-01-18 (N.T.C.)

Dati geometrici

X ini.	Y ini.	Z ini.inf.	Z ini.sup.	H ini.	X fin.	Y fin.	Z fin.inf.	Z fin.sup	H fin.	Luce	Spessore	R. Trazione
-16.992	-4.589	7.46	7.9	0.44	-16.992	-3.499	7.46	7.9	0.44	1.09	0.3	30000

Caratteristiche del materiale

(Circolare 7 21-01-19 C8.5.I) Muratura in mattoni pieni e malta di calce LC2_Corti

fb_	fhk	fvk0	fhmedio	τ0	fv0	μ	ϕ	fvk,lim	E	G	FC
120000			172500	9000	20000	0.577	0.767	6500	320000000	128000000	1.2

Verifiche a pressoflessione delle travi in muratura in combinazioni non sismiche

Sezione	γM	N	M	Mu	Comb.	c.s.	Verifica
ini.	3	128	-48	294.67	SLU 78	6.14	Si
fin.	3	-68	54.1	294.67	SLU 78	5.45	Si
ini.	3	186	-58.64	294.67	SLU 76	5.03	Si
fin.	3	-27	60.66	294.67	SLU 76	4.86	Si

Sezione	γM	N	M	Mu	Comb.	c.s.	Verifica
ini.	3	183	-57.82	294.67	SLU 34	5.1	Si
fin.	3	-17	60.18	294.67	SLU 34	4.9	Si
ini.	3	185	-58.01	294.67	SLU 73	5.08	Si
fin.	3	-26	60.29	294.67	SLU 73	4.89	Si
ini.	3	127	-47.38	294.67	SLU 75	6.22	Si
fin.	3	-68	53.73	294.67	SLU 75	5.48	Si
ini.	3	125	-46.69	294.67	SLU 82	6.31	Si
fin.	3	-69	53.84	294.67	SLU 82	5.47	Si
ini.	3	182	-57.2	294.67	SLU 31	5.15	Si
fin.	3	-16	59.81	294.67	SLU 31	4.93	Si
ini.	3	126	-47.31	294.67	SLU 84	6.23	Si
fin.	3	-69	54.22	294.67	SLU 84	5.43	Si
ini.	3	125	-47.19	294.67	SLU 36	6.24	Si
fin.	3	-58	53.62	294.67	SLU 36	5.5	Si
ini.	3	123	-46.5	294.67	SLU 42	6.34	Si
fin.	3	-59	53.73	294.67	SLU 42	5.48	Si

Verifiche a taglio delle travi in muratura secondo §C8.7.1.3.1 in combinazioni non sismiche

Sezione	γM	N	M	V	Vt	Vp	Vt fess. diag.	Vt,lim	Comb.	c.s.	Verifica
ini.	3	28	-19.33	-306			339	123	SLU 71	0.4	No
fin.	3	-92	24.61	-73			363	140	SLU 71	1.91	Si
ini.	3	30	-21.8	-300			339	123	SLU 69	0.41	No
fin.	3	-99	28.32	-68			365	141	SLU 69	2.08	Si
ini.	3	27	-18.13	-311			339	124	SLU 58	0.4	No
fin.	3	-91	24.26	-75			363	140	SLU 58	1.87	Si
ini.	3	35	-27.41	-319			339	122	SLU 77	0.38	No
fin.	3	-119	38.13	-52			371	144	SLU 77	2.74	Si
ini.	3	34	-26.71	-324			339	122	SLU 83	0.38	No
fin.	3	-120	38.24	-54			371	144	SLU 83	2.68	Si
ini.	3	28	-19.91	-309			339	123	SLU 62	0.4	No
fin.	3	-99	28.09	-70			365	141	SLU 62	2.01	Si
ini.	3	33	-26.09	-313			339	123	SLU 81	0.39	No
fin.	3	-119	37.87	-56			371	144	SLU 81	2.58	Si
ini.	3	33	-24.93	-325			339	123	SLU 79	0.38	No
fin.	3	-112	34.41	-58			369	143	SLU 79	2.45	Si
ini.	3	34	-26.78	-309			339	122	SLU 74	0.4	No
fin.	3	-118	37.75	-54			370	144	SLU 74	2.64	Si
ini.	3	29	-20.61	-305			339	123	SLU 56	0.4	No
fin.	3	-98	27.97	-69			365	141	SLU 56	2.04	Si

Verifiche a pressoflessione delle travi in muratura in combinazioni sismiche

Sezione	γM	N	M	Mu	Comb.	c.s.	Verifica
ini.	2	2049	-553.74	442.01	SLV 9	0.8	No
fin.	2	-1691	855.08	442.01	SLV 9	0.52	No
ini.	2	2451	-375.45	442.01	SLV 6	1.18	Si
fin.	2	-1395	741.2	442.01	SLV 6	0.6	No
ini.	2	18	-446.34	442.01	SLV 14	0.99	No
fin.	2	-1005	442.48	442.01	SLV 14	1	No
ini.	2	18	-446.34	442.01	SLV 13	0.99	No
fin.	2	-1005	442.48	442.01	SLV 13	1	No
ini.	2	-2009	525.71	442.01	SLV 7	0.84	No
fin.	2	1550	-817.23	442.01	SLV 7	0.54	No
ini.	2	2049	-553.74	442.01	SLV 10	0.8	No
fin.	2	-1691	855.08	442.01	SLV 10	0.52	No
ini.	2	-2009	525.71	442.01	SLV 8	0.84	No
fin.	2	1550	-817.23	442.01	SLV 8	0.54	No
ini.	2	-2411	347.41	442.01	SLV 11	1.27	Si
fin.	2	1254	-703.35	442.01	SLV 11	0.63	No
ini.	2	2451	-375.45	442.01	SLV 5	1.18	Si
fin.	2	-1395	741.2	442.01	SLV 5	0.6	No
ini.	2	-2411	347.41	442.01	SLV 12	1.27	Si
fin.	2	1254	-703.35	442.01	SLV 12	0.63	No

Verifiche a taglio delle travi in muratura secondo §C8.7.1.3.1 in combinazioni sismiche

Sezione	γM	N	M	V	Vt	Vp	Vt fess. diag.	Vt,lim	Comb.	c.s.	Verifica
ini.	2	2451	-375.45	1857			508	0	SLV 5	0	No
fin.	2	-1395	741.2	-4192			880	338	SLV 5	0.08	No
ini.	2	2049	-553.74	1859			508	0	SLV 9	0	No
fin.	2	-1691	855.08	-3942			959	361	SLV 9	0.09	No
ini.	2	-2009	525.71	-2304			1044	385	SLV 7	0.17	No
fin.	2	1550	-817.23	3824			508	0	SLV 7	0	No
ini.	2	1360	147.97	398			508	0	SLV 2	0	No
fin.	2	-20	62.89	-1678			514	194	SLV 2	0.12	No
ini.	2	-2009	525.71	-2304			1044	385	SLV 8	0.17	No
fin.	2	1550	-817.23	3824			508	0	SLV 8	0	No
ini.	2	22	418.31	-850			508	188	SLV 4	0.22	No
fin.	2	864	-404.64	727			508	0	SLV 4	0	No
ini.	2	2049	-553.74	1859			508	0	SLV 10	0	No
fin.	2	-1691	855.08	-3942			959	361	SLV 10	0.09	No
ini.	2	1360	147.97	398			508	0	SLV 1	0	No
fin.	2	-20	62.89	-1678			514	194	SLV 1	0.12	No
ini.	2	22	418.31	-850			508	188	SLV 3	0.22	No
fin.	2	864	-404.64	727			508	0	SLV 3	0	No
ini.	2	2451	-375.45	1857			508	0	SLV 6	0	No
fin.	2	-1395	741.2	-4192			880	338	SLV 6	0.08	No

Tabella dei coefficienti di sicurezza minimi

Stato limite	Coeff.s.	Comb.	Verifica
PF_SLV	0.517	SLV 9	No
V_SLV	0	SLV 1	No

Stato limite	Coeff.s.	Comb.	Verifica
PF_SLU	4.857	SLU 76	Si
V_SLU	0.377	SLU 79	No

Trave di accoppiamento 78

Verifiche condotte secondo D.M. 17-01-18 (N.T.C.)

Dati geometrici

X ini.	Y ini.	Z ini.inf.	Z ini.sup.	H ini.	X fin.	Y fin.	Z fin.inf.	Z fin.sup	H fin.	Luce	Spessore	R. Trazione
-15.3	-3.254	6.45	7.9	1.45	-16.2	-3.254	6.45	7.9	1.45	0.9	0.28	30000

Caratteristiche del materiale

(Circolare 7 21-01-19 C8.5.I) Muratura in mattoni pieni e malta di calce LC2_Corti

fb_	fhk	fvk0	fhmedio	τ0	fv0	μ	ϕ	fvk,lim	E	G	FC
120000			172500	9000	20000	0.577	0.767	6500	320000000	128000000	1.2

Verifiche a pressoflessione delle travi in muratura in combinazioni non sismiche

Sezione	γM	N	M	Mu	Comb.	c.s.	Verifica
ini.	3	-179	-1519.43	2986.79	SLU 83	1.97	Si
fin.	3	-179	909.41	2986.79	SLU 83	3.28	Si
ini.	3	-144	-1458.24	2986.79	SLU 77	2.05	Si
fin.	3	-144	835.16	2986.79	SLU 77	3.58	Si
ini.	3	-252	-1457.25	2986.79	SLU 75	2.05	Si
fin.	3	-252	846.36	2986.79	SLU 75	3.53	Si
ini.	3	-264	-1506.34	2986.79	SLU 84	1.98	Si
fin.	3	-264	894.9	2986.79	SLU 84	3.34	Si
ini.	3	-344	-1425.96	2986.79	SLU 73	2.09	Si
fin.	3	-344	843.83	2986.79	SLU 73	3.54	Si
ini.	3	-204	-1531.55	2986.79	SLU 81	1.95	Si
fin.	3	-204	935.14	2986.79	SLU 81	3.19	Si
ini.	3	-155	-1423.56	2986.79	SLU 79	2.1	Si
fin.	3	-155	816.58	2986.79	SLU 79	3.66	Si
ini.	3	-228	-1445.14	2986.79	SLU 78	2.07	Si
fin.	3	-228	820.64	2986.79	SLU 78	3.64	Si
ini.	3	-288	-1518.45	2986.79	SLU 82	1.97	Si
fin.	3	-288	920.62	2986.79	SLU 82	3.24	Si
ini.	3	-168	-1470.35	2986.79	SLU 74	2.03	Si
fin.	3	-168	860.88	2986.79	SLU 74	3.47	Si

Verifiche a taglio delle travi in muratura secondo §C8.7.1.3.1 in combinazioni non sismiche

Sezione	γM	N	M	V	Vt	Vp	Vt fess. diag.	Vt,lim	Comb.	c.s.	Verifica
ini.	3	-264	-1506.34	3799			1669	643	SLU 84	0.17	No
fin.	3	-264	894.9	1575			1669	643	SLU 84	0.41	No
ini.	3	-144	-1458.24	3601			1621	619	SLU 77	0.17	No
fin.	3	-144	835.16	1533			1621	619	SLU 77	0.4	No
ini.	3	-156	-1346.18	3444			1626	621	SLU 39	0.18	No
fin.	3	-156	849.49	1464			1626	621	SLU 39	0.42	No
ini.	3	-155	-1423.56	3542			1626	621	SLU 79	0.18	No
fin.	3	-155	816.58	1474			1626	621	SLU 79	0.42	No
ini.	3	-288	-1518.45	3841			1679	648	SLU 82	0.17	No
fin.	3	-288	920.62	1617			1679	648	SLU 82	0.4	No
ini.	3	-168	-1470.35	3643			1631	624	SLU 74	0.17	No
fin.	3	-168	860.88	1575			1631	624	SLU 74	0.4	No
ini.	3	-252	-1457.25	3612			1665	641	SLU 75	0.18	No
fin.	3	-252	846.36	1545			1665	641	SLU 75	0.41	No
ini.	3	-179	-1519.43	3830			1635	626	SLU 83	0.16	No
fin.	3	-179	909.41	1605			1635	626	SLU 83	0.39	No
ini.	3	-204	-1531.55	3872			1645	631	SLU 81	0.16	No
fin.	3	-204	935.14	1647			1645	631	SLU 81	0.38	No
ini.	3	-228	-1445.14	3570			1655	636	SLU 78	0.18	No
fin.	3	-228	820.64	1503			1655	636	SLU 78	0.42	No

Verifiche a pressoflessione delle travi in muratura in combinazioni sismiche

Sezione	γM	N	M	Mu	Comb.	c.s.	Verifica
ini.	2	-1491	4074.81	4480.18	SLV 2	1.1	Si
fin.	2	-2075	-3290.85	4480.18	SLV 2	1.36	Si
ini.	2	1179	-6021.06	4480.18	SLV 16	0.74	No
fin.	2	1763	4405.03	4480.18	SLV 16	1.02	Si
ini.	2	284	-3235.31	4480.18	SLV 10	1.38	Si
fin.	2	-586	2617.86	4480.18	SLV 10	1.71	Si
ini.	2	1201	-6432.7	4480.18	SLV 14	0.7	No
fin.	2	1209	4903.96	4480.18	SLV 14	0.91	No
ini.	2	1179	-6021.06	4480.18	SLV 15	0.74	No
fin.	2	1763	4405.03	4480.18	SLV 15	1.02	Si
ini.	2	1201	-6432.7	4480.18	SLV 13	0.7	No
fin.	2	1209	4903.96	4480.18	SLV 13	0.91	No
ini.	2	-1513	4486.45	4480.18	SLV 4	1	No
fin.	2	-1521	-3789.78	4480.18	SLV 4	1.18	Si
ini.	2	-1513	4486.45	4480.18	SLV 3	1	No
fin.	2	-1521	-3789.78	4480.18	SLV 3	1.18	Si
ini.	2	-1491	4074.81	4480.18	SLV 1	1.1	Si
fin.	2	-2075	-3290.85	4480.18	SLV 1	1.36	Si
ini.	2	284	-3235.31	4480.18	SLV 9	1.38	Si
fin.	2	-586	2617.86	4480.18	SLV 9	1.71	Si

Verifiche a taglio delle travi in muratura secondo §C8.7.1.3.1 in combinazioni sismiche

Sezione	γM	N	M	V	Vt	Vp	Vt fess. diag.	Vt,lim	Comb.	c.s.	Verifica
ini.	2	284	-3235.31	6008			2345	818	SLV 10	0.14	No
fin.	2	-586	2617.86	6298			2580	1002	SLV 10	0.16	No
ini.	2	1179	-6021.06	12691			2345	572	SLV 16	0.05	No
fin.	2	1763	4405.03	10703			2345	320	SLV 16	0.03	No
ini.	2	-1513	4486.45	-8206			2951	1166	SLV 4	0.14	No
fin.	2	-1521	-3789.78	-9919			2954	1167	SLV 4	0.12	No
ini.	2	-1513	4486.45	-8206			2951	1166	SLV 3	0.14	No
fin.	2	-1521	-3789.78	-9919			2954	1167	SLV 3	0.12	No
ini.	2	1179	-6021.06	12691			2345	572	SLV 15	0.05	No
fin.	2	1763	4405.03	10703			2345	320	SLV 15	0.03	No
ini.	2	284	-3235.31	6008			2345	818	SLV 9	0.14	No
fin.	2	-586	2617.86	6298			2580	1002	SLV 9	0.16	No
ini.	2	-1491	4074.81	-7915			2942	1162	SLV 2	0.15	No
fin.	2	-2075	-3290.85	-8621			3175	1255	SLV 2	0.15	No
ini.	2	1201	-6432.7	12982			2345	564	SLV 14	0.04	No
fin.	2	1209	4903.96	12001			2345	561	SLV 14	0.05	No
ini.	2	1201	-6432.7	12982			2345	564	SLV 13	0.04	No
fin.	2	1209	4903.96	12001			2345	561	SLV 13	0.05	No
ini.	2	-1491	4074.81	-7915			2942	1162	SLV 1	0.15	No
fin.	2	-2075	-3290.85	-8621			3175	1255	SLV 1	0.15	No

Tabella dei coefficienti di sicurezza minimi

Stato limite	Coeff.s.	Comb.	Verifica
PF_SLV	0.696	SLV 13	No
V_SLV	0.03	SLV 15	No
PF_SLU	1.95	SLU 81	Si
V_SLU	0.163	SLU 81	No

Trave di accoppiamento 79

Verifiche condotte secondo D.M. 17-01-18 (N.T.C.)

Dati geometrici

X ini.	Y ini.	Z ini.inf.	Z ini.sup.	H ini.	X fin.	Y fin.	Z fin.inf.	Z fin.sup	H fin.	Luce	Spessore	R. Trazione
-14.61	-4.784	7.46	7.9	0.44	-16.45	-4.784	7.46	7.9	0.44	1.84	0.3	30000

Caratteristiche del materiale

(Circolare 7 21-01-19 C8.5.I) Muratura in mattoni pieni e malta di calce LC2_Corti

fb_	fhk	fvk0	fhmedio	τ0	fv0	μ	ϕ	fvk,lim	E	G	FC
120000			172500	9000	20000	0.577	0.767	6500	320000000	128000000	1.2

Verifiche a pressoflessione delle travi in muratura in combinazioni non sismiche

Sezione	γM	N	M	Mu	Comb.	c.s.	Verifica
ini.	3	509	-248.92	294.67	SLU 82	1.18	Si
fin.	3	141	22.13	294.67	SLU 82	13.32	Si
ini.	3	505	-241.17	294.67	SLU 76	1.22	Si
fin.	3	97	36	294.67	SLU 76	8.18	Si
ini.	3	489	-235.13	294.67	SLU 78	1.25	Si
fin.	3	108	31.41	294.67	SLU 78	9.38	Si
ini.	3	486	-240.22	294.67	SLU 83	1.23	Si
fin.	3	161	14.4	294.67	SLU 83	20.46	Si
ini.	3	491	-235.99	294.67	SLU 80	1.25	Si
fin.	3	108	31.78	294.67	SLU 80	9.27	Si
ini.	3	484	-233.27	294.67	SLU 75	1.26	Si
fin.	3	114	28.63	294.67	SLU 75	10.29	Si
ini.	3	457	-226.22	294.67	SLU 42	1.3	Si
fin.	3	127	17.32	294.67	SLU 42	17.02	Si
ini.	3	514	-250.77	294.67	SLU 84	1.18	Si
fin.	3	135	24.91	294.67	SLU 84	11.83	Si
ini.	3	500	-239.31	294.67	SLU 73	1.23	Si
fin.	3	103	33.22	294.67	SLU 73	8.87	Si
ini.	3	481	-238.37	294.67	SLU 81	1.24	Si
fin.	3	167	11.62	294.67	SLU 81	25.35	Si

Verifiche a taglio delle travi in muratura secondo §C8.7.1.3.1 in combinazioni non sismiche

Sezione	γM	N	M	V	Vt	Vp	Vt fess. diag.	Vt,lim	Comb.	c.s.	Verifica
ini.	3	484	-233.27	585			339	0	SLU 75	0	No
fin.	3	114	28.63	1192			339	110	SLU 75	0.09	No
ini.	3	440	-205.47	499			339	0	SLU 55	0	No
fin.	3	69	39.59	1187			339	117	SLU 55	0.1	No
ini.	3	452	-224.36	574			339	0	SLU 40	0	No
fin.	3	133	14.53	974			339	107	SLU 40	0.11	No
ini.	3	456	-222.72	573			339	0	SLU 74	0	No
fin.	3	140	18.12	1121			339	105	SLU 74	0.09	No
ini.	3	500	-239.31	594			339	0	SLU 73	0	No
fin.	3	103	33.22	1210			339	112	SLU 73	0.09	No
ini.	3	457	-226.22	574			339	0	SLU 42	0	No
fin.	3	127	17.32	1004			339	108	SLU 42	0.11	No
ini.	3	445	-213.22	540			339	0	SLU 61	0	No
fin.	3	113	25.71	1133			339	110	SLU 61	0.1	No
ini.	3	486	-240.22	622			339	0	SLU 83	0	No
fin.	3	161	14.4	1146			339	102	SLU 83	0.09	No
ini.	3	505	-241.17	593			339	0	SLU 76	0	No
fin.	3	97	36	1240			339	113	SLU 76	0.09	No
ini.	3	450	-215.08	540			339	0	SLU 63	0	No

Sezione	γM	N	M	V	Vt	Vp	Vt fess. diag.	Vt,lim	Comb.	c.s.	Verifica
fin.	3	108	28.5	1164			339	111	SLU 63	0.1	No

Verifiche a pressoflessione delle travi in muratura in combinazioni sismiche

Sezione	γM	N	M	Mu	Comb.	c.s.	Verifica
ini.	2	940	-722.41	442.01	SLV 12	0.61	No
fin.	2	-2041	563.36	442.01	SLV 12	0.78	No
ini.	2	1157	-713.92	442.01	SLV 14	0.62	No
fin.	2	-1578	462.13	442.01	SLV 14	0.96	No
ini.	2	-763	650.33	442.01	SLV 1	0.68	No
fin.	2	2636	-654.23	442.01	SLV 1	0.68	No
ini.	2	-336	434.52	442.01	SLV 6	1.02	Si
fin.	2	2205	-528.4	442.01	SLV 6	0.84	No
ini.	2	-763	650.33	442.01	SLV 2	0.68	No
fin.	2	2636	-654.23	442.01	SLV 2	0.68	No
ini.	2	-336	434.52	442.01	SLV 5	1.02	Si
fin.	2	2205	-528.4	442.01	SLV 5	0.84	No
ini.	2	1367	-938.21	442.01	SLV 16	0.47	No
fin.	2	-2472	689.19	442.01	SLV 16	0.64	No
ini.	2	940	-722.41	442.01	SLV 11	0.61	No
fin.	2	-2041	563.36	442.01	SLV 11	0.78	No
ini.	2	1367	-938.21	442.01	SLV 15	0.47	No
fin.	2	-2472	689.19	442.01	SLV 15	0.64	No
ini.	2	1157	-713.92	442.01	SLV 13	0.62	No
fin.	2	-1578	462.13	442.01	SLV 13	0.96	No

Verifiche a taglio delle travi in muratura secondo §C8.7.1.3.1 in combinazioni sismiche

Sezione	γM	N	M	V	Vt	Vp	Vt fess. diag.	Vt,lim	Comb.	c.s.	Verifica
ini.	2	940	-722.41	1081			508	0	SLV 11	0	No
fin.	2	-2041	563.36	1379			1053	387	SLV 11	0.28	No
ini.	2	-336	434.52	-349			598	235	SLV 5	0.67	No
fin.	2	2205	-528.4	222			508	0	SLV 5	0	No
ini.	2	-763	650.33	-850			712	281	SLV 1	0.33	No
fin.	2	2636	-654.23	922			508	0	SLV 1	0	No
ini.	2	-763	650.33	-850			712	281	SLV 2	0.33	No
fin.	2	2636	-654.23	922			508	0	SLV 2	0	No
ini.	2	-336	434.52	-349			598	235	SLV 6	0.67	No
fin.	2	2205	-528.4	222			508	0	SLV 6	0	No
ini.	2	240	25.25	312			508	153	SLV 9	0.49	No
fin.	2	941	-193.49	28			508	0	SLV 9	0	No
ini.	2	-553	426.03	-619			656	259	SLV 4	0.42	No
fin.	2	1741	-427.18	1328			508	0	SLV 4	0	No
ini.	2	240	25.25	312			508	153	SLV 10	0.49	No
fin.	2	941	-193.49	28			508	0	SLV 10	0	No
ini.	2	-553	426.03	-619			656	259	SLV 3	0.42	No
fin.	2	1741	-427.18	1328			508	0	SLV 3	0	No
ini.	2	940	-722.41	1081			508	0	SLV 12	0	No
fin.	2	-2041	563.36	1379			1053	387	SLV 12	0.28	No

Tabella dei coefficienti di sicurezza minimi

Stato limite	Coeff.s.	Comb.	Verifica
PF_SLV	0.471	SLV 15	No
V_SLV	0	SLV 1	No
PF_SLU	1.175	SLU 84	Si
V_SLU	0	SLU 31	No

Trave di accoppiamento 80

Verifiche condotte secondo D.M. 17-01-18 (N.T.C.)

Dati geometrici

X ini.	Y ini.	Z ini.inf.	Z ini.sup.	H ini.	X fin.	Y fin.	Z fin.inf.	Z fin.sup	H fin.	Luce	Spessore	R. Trazione
-18.643	1.046	6.45	7.9	1.45	-19.443	1.046	6.45	7.9	1.45	0.8	0.28	30000

Caratteristiche del materiale

(Circolare 7 21-01-19 C8.5.I) Muratura in mattoni pieni e malta di calce LC2_Corti

fb_	fhk	fvk0	fhmedio	τ0	fv0	μ	ϕ	fvk,lim	E	G	FC
120000			172500	9000	20000	0.577	0.767	6500	320000000	128000000	1.2

Verifiche a pressoflessione delle travi in muratura in combinazioni non sismiche

Sezione	γM	N	M	Mu	Comb.	c.s.	Verifica
ini.	3	-115	23.56	2986.79	SLU 35	126.76	Si
fin.	3	-378	-343.78	2986.79	SLU 35	8.69	Si
ini.	3	-168	-66.14	2986.79	SLU 56	45.16	Si
fin.	3	-482	-357.75	2986.79	SLU 56	8.35	Si
ini.	3	-102	-82.7	2986.79	SLU 69	36.12	Si
fin.	3	-423	-354.86	2986.79	SLU 69	8.42	Si
ini.	3	-324	-7.37	2986.79	SLU 83	405.07	Si
fin.	3	-622	-364.75	2986.79	SLU 83	8.19	Si
ini.	3	-261	-23.49	2986.79	SLU 74	127.17	Si
fin.	3	-571	-368.29	2986.79	SLU 74	8.11	Si
ini.	3	-179	-21.18	2986.79	SLU 77	141.01	Si
fin.	3	-502	-392.63	2986.79	SLU 77	7.61	Si
ini.	3	-209	-31.43	2986.79	SLU 79	95.03	Si
fin.	3	-519	-372.9	2986.79	SLU 79	8.01	Si
ini.	3	-132	-92.95	2986.79	SLU 71	32.13	Si
fin.	3	-440	-335.13	2986.79	SLU 71	8.91	Si
ini.	3	-407	-9.68	2986.79	SLU 81	308.59	Si

Sezione	γM	N	M	Mu	Comb.	c.s.	Verifica
fin.	3	-692	-340.41	2986.79	SLU 81	8.77	Si
ini.	3	-198	-76.39	2986.79	SLU 58	39.1	Si
fin.	3	-499	-338.02	2986.79	SLU 58	8.84	Si

Verifiche a taglio delle travi in muratura secondo §C8.7.1.3.1 in combinazioni non sismiche

Sezione	γM	N	M	V	Vt	Vp	Vt fess. diag.	Vt,lim	Comb.	c.s.	Verifica
ini.	3	-407	-9.68	2883			1726	671	SLU 81	0.23	No
fin.	3	-692	-340.41	-1834			1840	723	SLU 81	0.39	No
ini.	3	-401	-118.99	2963			1724	670	SLU 76	0.23	No
fin.	3	-634	-219.73	-1403			1817	713	SLU 76	0.51	No
ini.	3	-244	-72.33	2887			1661	639	SLU 78	0.22	No
fin.	3	-529	-315.33	-1631			1775	694	SLU 78	0.43	No
ini.	3	-209	-31.43	2753			1647	632	SLU 79	0.23	No
fin.	3	-519	-372.9	-1778			1771	692	SLU 79	0.39	No
ini.	3	-179	-21.18	2745			1635	626	SLU 77	0.23	No
fin.	3	-502	-392.63	-1828			1764	689	SLU 77	0.38	No
ini.	3	-324	-7.37	2910			1693	655	SLU 83	0.23	No
fin.	3	-622	-364.75	-1881			1812	711	SLU 83	0.38	No
ini.	3	-390	-58.52	3053			1720	668	SLU 84	0.22	No
fin.	3	-649	-287.45	-1684			1823	716	SLU 84	0.42	No
ini.	3	-327	-74.64	2860			1694	656	SLU 75	0.23	No
fin.	3	-599	-290.99	-1584			1803	707	SLU 75	0.45	No
ini.	3	-274	-82.58	2896			1673	645	SLU 80	0.22	No
fin.	3	-546	-295.6	-1581			1782	697	SLU 80	0.44	No
ini.	3	-473	-60.83	3026			1753	683	SLU 82	0.23	No
fin.	3	-719	-263.11	-1637			1851	728	SLU 82	0.44	No

Verifiche a pressoflessione delle travi in muratura in combinazioni sismiche

Sezione	γM	N	M	Mu	Comb.	c.s.	Verifica
ini.	2	-1050	-4202.43	4480.18	SLV 14	1.07	Si
fin.	2	1495	5570.45	4480.18	SLV 14	0.8	No
ini.	2	553	4067.73	4480.18	SLV 4	1.1	Si
fin.	2	-2422	-6017.38	4480.18	SLV 4	0.74	No
ini.	2	-1667	-3334.18	4480.18	SLV 9	1.34	Si
fin.	2	417	4517.33	4480.18	SLV 9	0.99	No
ini.	2	-224	2731.71	4480.18	SLV 1	1.64	Si
fin.	2	-2228	-4037.63	4480.18	SLV 1	1.11	Si
ini.	2	553	4067.73	4480.18	SLV 3	1.1	Si
fin.	2	-2422	-6017.38	4480.18	SLV 3	0.74	No
ini.	2	1171	3199.48	4480.18	SLV 7	1.4	Si
fin.	2	-1345	-4964.27	4480.18	SLV 7	0.9	No
ini.	2	-1667	-3334.18	4480.18	SLV 10	1.34	Si
fin.	2	417	4517.33	4480.18	SLV 10	0.99	No
ini.	2	-224	2731.71	4480.18	SLV 2	1.64	Si
fin.	2	-2228	-4037.63	4480.18	SLV 2	1.11	Si
ini.	2	-1050	-4202.43	4480.18	SLV 13	1.07	Si
fin.	2	1495	5570.45	4480.18	SLV 13	0.8	No
ini.	2	1171	3199.48	4480.18	SLV 8	1.4	Si
fin.	2	-1345	-4964.27	4480.18	SLV 8	0.9	No

Verifiche a taglio delle travi in muratura secondo §C8.7.1.3.1 in combinazioni sismiche

Sezione	γM	N	M	V	Vt	Vp	Vt fess. diag.	Vt,lim	Comb.	c.s.	Verifica
ini.	2	-273	-2866.41	10065			2455	940	SLV 16	0.09	No
fin.	2	1301	3590.69	8981			2345	529	SLV 16	0.06	No
ini.	2	-1050	-4202.43	13899			2765	1087	SLV 14	0.08	No
fin.	2	1495	5570.45	14031			2345	453	SLV 14	0.03	No
ini.	2	-273	-2866.41	10065			2455	940	SLV 15	0.09	No
fin.	2	1301	3590.69	8981			2345	529	SLV 15	0.06	No
ini.	2	1171	3199.48	-7673			2345	574	SLV 7	0.07	No
fin.	2	-1345	-4964.27	-13247			2883	1138	SLV 7	0.09	No
ini.	2	-1050	-4202.43	13899			2765	1087	SLV 13	0.08	No
fin.	2	1495	5570.45	14031			2345	453	SLV 13	0.03	No
ini.	2	553	4067.73	-10341			2345	753	SLV 3	0.07	No
fin.	2	-2422	-6017.38	-16151			3314	1307	SLV 3	0.08	No
ini.	2	-1667	-3334.18	11231			3012	1191	SLV 9	0.11	No
fin.	2	417	4517.33	11127			2345	787	SLV 9	0.07	No
ini.	2	1171	3199.48	-7673			2345	574	SLV 8	0.07	No
fin.	2	-1345	-4964.27	-13247			2883	1138	SLV 8	0.09	No
ini.	2	553	4067.73	-10341			2345	753	SLV 4	0.07	No
fin.	2	-2422	-6017.38	-16151			3314	1307	SLV 4	0.08	No
ini.	2	-1667	-3334.18	11231			3012	1191	SLV 10	0.11	No
fin.	2	417	4517.33	11127			2345	787	SLV 10	0.07	No

Tabella dei coefficienti di sicurezza minimi

Stato limite	Coeff.s.	Comb.	Verifica
PF_SLV	0.745	SLV 3	No
V_SLV	0.032	SLV 13	No
PF_SLU	7.607	SLU 77	Si
V_SLU	0.219	SLU 84	No

Trave di accoppiamento 81

Verifiche condotte secondo D.M. 17-01-18 (N.T.C.)

Dati geometrici

X ini.	Y ini.	Z ini.inf.	Z ini.sup.	H ini.	X fin.	Y fin.	Z fin.inf.	Z fin.sup	H fin.	Luce	Spessore	R. Trazione
-14.053	1.046	6.45	7.9	1.45	-14.853	1.046	6.45	7.9	1.45	0.8	0.28	30000

Caratteristiche del materiale

(Circolare 7 21-01-19 C8.5.I) Muratura in mattoni pieni e malta di calce LC2_Corti

fb_	fhk	fvk0	fhmedio	τ0	fv0	μ	ϕ	fvk,lim	E	G	FC
120000			172500	9000	20000	0.577	0.767	6500	320000000	128000000	1.2

Verifiche a pressoflessione delle travi in muratura in combinazioni non sismiche

Sezione	γM	N	M	Mu	Comb.	c.s.	Verifica
ini.	3	-1086	122.64	2986.79	SLU 35	24.36	Si
fin.	3	-330	387.79	2986.79	SLU 35	7.7	Si
ini.	3	-1124	126.46	2986.79	SLU 38	23.62	Si
fin.	3	-395	359.56	2986.79	SLU 38	8.31	Si
ini.	3	-1185	68.9	2986.79	SLU 41	43.35	Si
fin.	3	-413	387.48	2986.79	SLU 41	7.71	Si
ini.	3	-1225	73.84	2986.79	SLU 42	40.45	Si
fin.	3	-478	357.63	2986.79	SLU 42	8.35	Si
ini.	3	-1282	91.21	2986.79	SLU 83	32.75	Si
fin.	3	-491	381.35	2986.79	SLU 83	7.83	Si
ini.	3	-1125	127.57	2986.79	SLU 36	23.41	Si
fin.	3	-395	357.95	2986.79	SLU 36	8.34	Si
ini.	3	-1182	144.94	2986.79	SLU 77	20.61	Si
fin.	3	-408	381.67	2986.79	SLU 77	7.83	Si
ini.	3	-1180	143.83	2986.79	SLU 79	20.77	Si
fin.	3	-408	383.28	2986.79	SLU 79	7.79	Si
ini.	3	-1084	121.53	2986.79	SLU 37	24.58	Si
fin.	3	-330	389.4	2986.79	SLU 37	7.67	Si
ini.	3	-1220	148.76	2986.79	SLU 80	20.08	Si
fin.	3	-473	353.44	2986.79	SLU 80	8.45	Si

Verifiche a taglio delle travi in muratura secondo §C8.7.1.3.1 in combinazioni non sismiche

Sezione	γM	N	M	V	Vt	Vp	Vt fess. diag.	Vt,lim	Comb.	c.s.	Verifica
ini.	3	-1311	54.73	6602			2088	826	SLU 82	0.13	No
fin.	3	-600	311.98	-2394			1804	707	SLU 82	0.3	No
ini.	3	-1222	149.87	6754			2052	812	SLU 78	0.12	No
fin.	3	-473	351.83	-2532			1753	684	SLU 78	0.27	No
ini.	3	-1182	144.94	6844			2036	805	SLU 77	0.12	No
fin.	3	-408	381.67	-2476			1727	671	SLU 77	0.27	No
ini.	3	-1321	96.14	6830			2092	827	SLU 84	0.12	No
fin.	3	-556	351.51	-2446			1786	699	SLU 84	0.29	No
ini.	3	-1272	49.8	6692			2072	819	SLU 81	0.12	No
fin.	3	-535	341.82	-2338			1778	695	SLU 81	0.3	No
ini.	3	-1180	143.83	6762			2036	805	SLU 79	0.12	No
fin.	3	-408	383.28	-2426			1727	671	SLU 79	0.28	No
ini.	3	-1282	91.21	6920			2076	821	SLU 83	0.12	No
fin.	3	-491	381.35	-2390			1760	687	SLU 83	0.29	No
ini.	3	-1220	148.76	6672			2052	811	SLU 80	0.12	No
fin.	3	-473	353.44	-2482			1753	684	SLU 80	0.28	No
ini.	3	-1212	108.47	6526			2048	810	SLU 75	0.12	No
fin.	3	-517	312.29	-2479			1770	692	SLU 75	0.28	No
ini.	3	-1172	103.53	6617			2032	804	SLU 74	0.12	No
fin.	3	-452	342.14	-2423			1744	680	SLU 74	0.28	No

Verifiche a pressoflessione delle travi in muratura in combinazioni sismiche

Sezione	γM	N	M	Mu	Comb.	c.s.	Verifica
ini.	2	662	3854.78	4480.18	SLV 14	1.16	Si
fin.	2	4783	4342.08	4480.18	SLV 14	1.03	Si
ini.	2	1079	4093.52	4480.18	SLV 16	1.09	Si
fin.	2	4068	3665.53	4480.18	SLV 16	1.22	Si
ini.	2	1079	4093.52	4480.18	SLV 15	1.09	Si
fin.	2	4068	3665.53	4480.18	SLV 15	1.22	Si
ini.	2	-2097	-3733.64	4480.18	SLV 4	1.2	Si
fin.	2	-5445	-4008.77	4480.18	SLV 4	1.12	Si
ini.	2	-2513	-3972.38	4480.18	SLV 1	1.13	Si
fin.	2	-4729	-3332.22	4480.18	SLV 1	1.34	Si
ini.	2	662	3854.78	4480.18	SLV 13	1.16	Si
fin.	2	4783	4342.08	4480.18	SLV 13	1.03	Si
ini.	2	-935	836.74	4480.18	SLV 10	5.35	Si
fin.	2	2289	2445.38	4480.18	SLV 10	1.83	Si
ini.	2	-935	836.74	4480.18	SLV 9	5.35	Si
fin.	2	2289	2445.38	4480.18	SLV 9	1.83	Si
ini.	2	-2513	-3972.38	4480.18	SLV 2	1.13	Si
fin.	2	-4729	-3332.22	4480.18	SLV 2	1.34	Si
ini.	2	-2097	-3733.64	4480.18	SLV 3	1.2	Si
fin.	2	-5445	-4008.77	4480.18	SLV 3	1.12	Si

Verifiche a taglio delle travi in muratura secondo §C8.7.1.3.1 in combinazioni sismiche

Sezione	γM	N	M	V	Vt	Vp	Vt fess. diag.	Vt,lim	Comb.	c.s.	Verifica
ini.	2	662	3854.78	7982			2345	724	SLV 14	0.09	No
fin.	2	4783	4342.08	3127			2345	0	SLV 14	0	No
ini.	2	1079	4093.52	5774			2345	604	SLV 16	0.1	No
fin.	2	4068	3665.53	696			2345	0	SLV 16	0	No
ini.	2	-1888	-1511.4	7087			3101	1226	SLV 5	0.17	No
fin.	2	-565	143.09	1185			2571	998	SLV 5	0.84	No
ini.	2	-935	836.74	8689			2719	1067	SLV 10	0.12	No
fin.	2	2289	2445.38	3390			2345	0	SLV 10	0	No
ini.	2	-1888	-1511.4	7087			3101	1226	SLV 6	0.17	No
fin.	2	-565	143.09	1185			2571	998	SLV 6	0.84	No
ini.	2	662	3854.78	7982			2345	724	SLV 13	0.09	No
fin.	2	4783	4342.08	3127			2345	0	SLV 13	0	No
ini.	2	1079	4093.52	5774			2345	604	SLV 15	0.1	No
fin.	2	4068	3665.53	696			2345	0	SLV 15	0	No

Sezione	γM	N	M	V	Vt	Vp	Vt fess. diag.	Vt,lim	Comb.	c.s.	Verifica
ini.	2	453	1632.54	1328			2345	778	SLV 11	0.59	No
fin.	2	-97	190.22	-4713			2384	903	SLV 11	0.19	No
ini.	2	453	1632.54	1328			2345	778	SLV 12	0.59	No
fin.	2	-97	190.22	-4713			2384	903	SLV 12	0.19	No
ini.	2	-935	836.74	8689			2719	1067	SLV 9	0.12	No
fin.	2	2289	2445.38	3390			2345	0	SLV 9	0	No

Tabella dei coefficienti di sicurezza minimi

Stato limite	Coeff.s.	Comb.	Verifica
PF_SLV	1.032	SLV 13	Si
V_SLV	0	SLV 9	No
PF_SLU	7.67	SLU 37	Si
V_SLU	0.118	SLU 77	No

Trave di accoppiamento 82

Verifiche condotte secondo D.M. 17-01-18 (N.T.C.)

Dati geometrici

X ini.	Y ini.	Z ini.inf.	Z ini.sup.	H ini.	X fin.	Y fin.	Z fin.inf.	Z fin.sup	H fin.	Luce	Spessore	R. Trazione
-12.543	1.046	6.45	7.9	1.45	-13.543	1.046	6.45	7.9	1.45	1	0.28	30000

Caratteristiche del materiale

(Circolare 7 21-01-19 C8.5.I) Muratura in mattoni pieni e malta di calce LC2_Corti

fb_	fhk	fvk0	fhmedio	τ0	fv0	μ	ϕ	fvk,lim	E	G	FC
120000			172500	9000	20000	0.577	0.767	6500	320000000	128000000	1.2

Verifiche a pressoflessione delle travi in muratura in combinazioni non sismiche

Sezione	γM	N	M	Mu	Comb.	c.s.	Verifica
ini.	3	-2347	557.68	2986.79	SLU 75	5.36	Si
fin.	3	-2347	380.11	2986.79	SLU 75	7.86	Si
ini.	3	-2354	548.22	2986.79	SLU 81	5.45	Si
fin.	3	-2354	277.61	2986.79	SLU 81	10.76	Si
ini.	3	-2442	574.31	2986.79	SLU 83	5.2	Si
fin.	3	-2442	355.82	2986.79	SLU 83	8.39	Si
ini.	3	-2353	567.75	2986.79	SLU 76	5.26	Si
fin.	3	-2353	388.02	2986.79	SLU 76	7.7	Si
ini.	3	-2398	567.97	2986.79	SLU 77	5.26	Si
fin.	3	-2398	445.89	2986.79	SLU 77	6.7	Si
ini.	3	-2391	564.02	2986.79	SLU 82	5.3	Si
fin.	3	-2391	290.04	2986.79	SLU 82	10.3	Si
ini.	3	-2380	567.52	2986.79	SLU 79	5.26	Si
fin.	3	-2380	445.52	2986.79	SLU 79	6.7	Si
ini.	3	-2416	583.31	2986.79	SLU 80	5.12	Si
fin.	3	-2416	457.94	2986.79	SLU 80	6.52	Si
ini.	3	-2478	590.1	2986.79	SLU 84	5.06	Si
fin.	3	-2478	368.24	2986.79	SLU 84	8.11	Si
ini.	3	-2434	583.77	2986.79	SLU 78	5.12	Si
fin.	3	-2434	458.31	2986.79	SLU 78	6.52	Si

Verifiche a taglio delle travi in muratura secondo §C8.7.1.3.1 in combinazioni non sismiche

Sezione	γM	N	M	V	Vt	Vp	Vt fess. diag.	Vt,lim	Comb.	c.s.	Verifica
ini.	3	-2478	590.1	698			2555	990	SLU 84	1.42	Si
fin.	3	-2478	368.24	-1087			2555	990	SLU 84	0.91	No
ini.	3	-1997	492.55	600			2362	926	SLU 60	1.54	Si
fin.	3	-1997	263.97	-1000			2362	926	SLU 60	0.93	No
ini.	3	-2354	548.22	649			2505	974	SLU 81	1.5	Si
fin.	3	-2354	277.61	-1136			2505	974	SLU 81	0.86	No
ini.	3	-2103	474.53	533			2405	940	SLU 39	1.77	Si
fin.	3	-2103	211.45	-1018			2405	940	SLU 39	0.92	No
ini.	3	-2310	541.89	690			2488	968	SLU 74	1.4	Si
fin.	3	-2310	367.69	-984			2488	968	SLU 74	0.98	No
ini.	3	-2266	541.67	633			2470	962	SLU 73	1.52	Si
fin.	3	-2266	309.81	-1042			2470	962	SLU 73	0.92	No
ini.	3	-2033	508.34	596			2377	931	SLU 61	1.56	Si
fin.	3	-2033	276.39	-1003			2377	931	SLU 61	0.93	No
ini.	3	-2391	564.02	646			2520	979	SLU 82	1.52	Si
fin.	3	-2391	290.04	-1139			2520	979	SLU 82	0.86	No
ini.	3	-2442	574.31	702			2540	985	SLU 83	1.4	Si
fin.	3	-2442	355.82	-1084			2540	985	SLU 83	0.91	No
ini.	3	-2139	490.32	529			2419	945	SLU 40	1.79	Si
fin.	3	-2139	223.87	-1021			2419	945	SLU 40	0.93	No

Verifiche a pressoflessione delle travi in muratura in combinazioni sismiche

Sezione	γM	N	M	Mu	Comb.	c.s.	Verifica
ini.	2	-4256	2356.07	4480.18	SLV 13	1.9	Si
fin.	2	-3834	7447.29	4480.18	SLV 13	0.6	No
ini.	2	-4256	2356.07	4480.18	SLV 14	1.9	Si
fin.	2	-3834	7447.29	4480.18	SLV 14	0.6	No
ini.	2	-3502	2225.92	4480.18	SLV 16	2.01	Si
fin.	2	-3573	7989.07	4480.18	SLV 16	0.56	No
ini.	2	1358	-1661.9	4480.18	SLV 4	2.7	Si
fin.	2	935	-6982.55	4480.18	SLV 4	0.64	No
ini.	2	-3502	2225.92	4480.18	SLV 15	2.01	Si
fin.	2	-3573	7989.07	4480.18	SLV 15	0.56	No
ini.	2	-921	713.34	4480.18	SLV 12	6.28	Si
fin.	2	-1692	3381.08	4480.18	SLV 12	1.33	Si

Sezione	γM	N	M	Mu	Comb.	c.s.	Verifica
ini.	2	603	-1531.74	4480.18	SLV 2	2.92	Si
fin.	2	675	-7524.33	4480.18	SLV 2	0.6	No
ini.	2	1358	-1661.9	4480.18	SLV 3	2.7	Si
fin.	2	935	-6982.55	4480.18	SLV 3	0.64	No
ini.	2	-921	713.34	4480.18	SLV 11	6.28	Si
fin.	2	-1692	3381.08	4480.18	SLV 11	1.33	Si
ini.	2	603	-1531.74	4480.18	SLV 1	2.92	Si
fin.	2	675	-7524.33	4480.18	SLV 1	0.6	No

Verifiche a taglio delle travi in muratura secondo §C8.7.1.3.1 in combinazioni sismiche

Sezione	γM	N	M	V	Vt	Vp	Vt fess. diag.	Vt,lim	Comb.	c.s.	Verifica
ini.	2	-3502	2225.92	6212			3746	1457	SLV 15	0.23	No
fin.	2	-3573	7989.07	5387			3775	1466	SLV 15	0.27	No
ini.	2	-1978	-19.16	-1526			3136	1240	SLV 5	0.81	No
fin.	2	-1207	-2916.34	-3663			2828	1115	SLV 5	0.3	No
ini.	2	1358	-1661.9	-5099			2345	508	SLV 3	0.1	No
fin.	2	935	-6982.55	-5908			2345	648	SLV 3	0.11	No
ini.	2	603	-1531.74	-5277			2345	740	SLV 2	0.14	No
fin.	2	675	-7524.33	-6696			2345	721	SLV 2	0.11	No
ini.	2	-4256	2356.07	6034			4048	1553	SLV 13	0.26	No
fin.	2	-3834	7447.29	4599			3879	1500	SLV 13	0.33	No
ini.	2	-4256	2356.07	6034			4048	1553	SLV 14	0.26	No
fin.	2	-3834	7447.29	4599			3879	1500	SLV 14	0.33	No
ini.	2	-3502	2225.92	6212			3746	1457	SLV 16	0.23	No
fin.	2	-3573	7989.07	5387			3775	1466	SLV 16	0.27	No
ini.	2	-1978	-19.16	-1526			3136	1240	SLV 6	0.81	No
fin.	2	-1207	-2916.34	-3663			2828	1115	SLV 6	0.3	No
ini.	2	603	-1531.74	-5277			2345	740	SLV 1	0.14	No
fin.	2	675	-7524.33	-6696			2345	721	SLV 1	0.11	No
ini.	2	1358	-1661.9	-5099			2345	508	SLV 4	0.1	No
fin.	2	935	-6982.55	-5908			2345	648	SLV 4	0.11	No

Tabella dei coefficienti di sicurezza minimi

Stato limite	Coeff.s.	Comb.	Verifica
PF_SLV	0.561	SLV 15	No
V_SLV	0.1	SLV 3	No
PF_SLU	5.061	SLU 84	Si
V_SLU	0.857	SLU 81	No

Trave di accoppiamento 83

Verifiche condotte secondo D.M. 17-01-18 (N.T.C.)

Dati geometrici

X ini.	Y ini.	Z ini.inf.	Z ini.sup.	H ini.	X fin.	Y fin.	Z fin.inf.	Z fin.sup	H fin.	Luce	Spessore	R. Trazione
-11.163	1.046	6.85	7.9	1.05	-12.283	1.046	6.85	7.9	1.05	1.12	0.28	30000

Caratteristiche del materiale

(Circolare 7 21-01-19 C8.5.I) Muratura in mattoni pieni e malta di calce LC2_Corti

fb_	fhk	fvk0	fhmedio	τ0	fv0	μ	ϕ	fvk,lim	E	G	FC
120000			172500	9000	20000	0.577	0.767	6500	320000000	128000000	1.2

Verifiche a pressoflessione delle travi in muratura in combinazioni non sismiche

Sezione	γM	N	M	Mu	Comb.	c.s.	Verifica
ini.	3	-2325	-829.35	1566.2	SLU 76	1.89	Si
fin.	3	-2325	194.74	1566.2	SLU 76	8.04	Si
ini.	3	-2323	-823.82	1566.2	SLU 81	1.9	Si
fin.	3	-2323	186.87	1566.2	SLU 81	8.38	Si
ini.	3	-2368	-866.28	1566.2	SLU 77	1.81	Si
fin.	3	-2368	190.16	1566.2	SLU 77	8.24	Si
ini.	3	-2350	-870.33	1566.2	SLU 79	1.8	Si
fin.	3	-2350	191.2	1566.2	SLU 79	8.19	Si
ini.	3	-2410	-868.03	1566.2	SLU 83	1.8	Si
fin.	3	-2410	194.92	1566.2	SLU 83	8.03	Si
ini.	3	-2318	-824.01	1566.2	SLU 75	1.9	Si
fin.	3	-2318	189.06	1566.2	SLU 75	8.28	Si
ini.	3	-2361	-825.76	1566.2	SLU 82	1.9	Si
fin.	3	-2361	193.83	1566.2	SLU 82	8.08	Si
ini.	3	-2405	-868.22	1566.2	SLU 78	1.8	Si
fin.	3	-2405	197.11	1566.2	SLU 78	7.95	Si
ini.	3	-2387	-872.27	1566.2	SLU 80	1.8	Si
fin.	3	-2387	198.15	1566.2	SLU 80	7.9	Si
ini.	3	-2447	-869.97	1566.2	SLU 84	1.8	Si
fin.	3	-2447	201.88	1566.2	SLU 84	7.76	Si

Verifiche a taglio delle travi in muratura secondo §C8.7.1.3.1 in combinazioni non sismiche

Sezione	γM	N	M	V	Vt	Vp	Vt fess. diag.	Vt,lim	Comb.	c.s.	Verifica
ini.	3	-2447	-869.97	1975			1979	747	SLU 84	0.38	No
fin.	3	-2447	201.88	-118			1979	747	SLU 84	6.34	Si
ini.	3	-2368	-866.28	1875			1949	738	SLU 77	0.39	No
fin.	3	-2368	190.16	-43			1949	738	SLU 77	17.25	Si
ini.	3	-2281	-822.08	1828			1917	729	SLU 74	0.4	No
fin.	3	-2281	182.11	-89			1917	729	SLU 74	8.15	Si
ini.	3	-2387	-872.27	1887			1957	740	SLU 80	0.39	No
fin.	3	-2387	198.15	-30			1957	740	SLU 80	24.43	Si
ini.	3	-2350	-870.33	1879			1943	736	SLU 79	0.39	No
fin.	3	-2350	191.2	-38			1943	736	SLU 79	19.25	Si

Sezione	γM	N	M	V	Vt	Vp	Vt fess. diag.	Vt,lim	Comb.	c.s.	Verifica
ini.	3	-2361	-825.76	1929			1947	738	SLU 82	0.38	No
fin.	3	-2361	193.83	-165			1947	738	SLU 82	4.48	Si
ini.	3	-2405	-868.22	1883			1963	742	SLU 78	0.39	No
fin.	3	-2405	197.11	-35			1963	742	SLU 78	21.3	Si
ini.	3	-2325	-829.35	1846			1933	734	SLU 76	0.4	No
fin.	3	-2325	194.74	-72			1933	734	SLU 76	10.23	Si
ini.	3	-2410	-868.03	1967			1965	743	SLU 83	0.38	No
fin.	3	-2410	194.92	-126			1965	743	SLU 83	5.91	Si
ini.	3	-2323	-823.82	1921			1933	733	SLU 81	0.38	No
fin.	3	-2323	186.87	-172			1933	733	SLU 81	4.25	Si

Verifiche a pressoflessione delle travi in muratura in combinazioni sismiche

Sezione	γM	N	M	Mu	Comb.	c.s.	Verifica
ini.	2	-4269	-6068.97	2349.3	SLV 13	0.39	No
fin.	2	-4182	996.53	2349.3	SLV 13	2.36	Si
ini.	2	-2982	-2756.38	2349.3	SLV 9	0.85	No
fin.	2	-3346	388.29	2349.3	SLV 9	6.05	Si
ini.	2	949	4628.35	2349.3	SLV 1	0.51	No
fin.	2	604	-751.95	2349.3	SLV 1	3.12	Si
ini.	2	-3808	-5699.13	2349.3	SLV 16	0.41	No
fin.	2	-3463	993.33	2349.3	SLV 16	2.37	Si
ini.	2	-2982	-2756.38	2349.3	SLV 10	0.85	No
fin.	2	-3346	388.29	2349.3	SLV 10	6.05	Si
ini.	2	1410	4998.18	2349.3	SLV 3	0.47	No
fin.	2	1323	-755.15	2349.3	SLV 3	3.11	Si
ini.	2	-4269	-6068.97	2349.3	SLV 14	0.39	No
fin.	2	-4182	996.53	2349.3	SLV 14	2.36	Si
ini.	2	949	4628.35	2349.3	SLV 2	0.51	No
fin.	2	604	-751.95	2349.3	SLV 2	3.12	Si
ini.	2	1410	4998.18	2349.3	SLV 4	0.47	No
fin.	2	1323	-755.15	2349.3	SLV 4	3.11	Si
ini.	2	-3808	-5699.13	2349.3	SLV 15	0.41	No
fin.	2	-3463	993.33	2349.3	SLV 15	2.37	Si

Verifiche a taglio delle travi in muratura secondo §C8.7.1.3.1 in combinazioni sismiche

Sezione	γM	N	M	V	Vt	Vp	Vt fess. diag.	Vt,lim	Comb.	c.s.	Verifica
ini.	2	-4269	-6068.97	6915			3193	1184	SLV 13	0.17	No
fin.	2	-4182	996.53	5621			3160	1175	SLV 13	0.21	No
ini.	2	949	4628.35	-4169			1592	357	SLV 2	0.09	No
fin.	2	604	-751.95	-5398			1592	460	SLV 2	0.09	No
ini.	2	-3808	-5699.13	6517			3020	1135	SLV 16	0.17	No
fin.	2	-3463	993.33	5315			2891	1098	SLV 16	0.21	No
ini.	2	123	1685.6	-1152			1592	574	SLV 7	0.5	No
fin.	2	487	-146.92	-2204			1592	490	SLV 7	0.22	No
ini.	2	-4269	-6068.97	6915			3193	1184	SLV 14	0.17	No
fin.	2	-4182	996.53	5621			3160	1175	SLV 14	0.21	No
ini.	2	-3808	-5699.13	6517			3020	1135	SLV 15	0.17	No
fin.	2	-3463	993.33	5315			2891	1098	SLV 15	0.21	No
ini.	2	949	4628.35	-4169			1592	357	SLV 1	0.09	No
fin.	2	604	-751.95	-5398			1592	460	SLV 1	0.09	No
ini.	2	1410	4998.18	-4567			1592	121	SLV 3	0.03	No
fin.	2	1323	-755.15	-5704			1592	190	SLV 3	0.03	No
ini.	2	1410	4998.18	-4567			1592	121	SLV 4	0.03	No
fin.	2	1323	-755.15	-5704			1592	190	SLV 4	0.03	No
ini.	2	123	1685.6	-1152			1592	574	SLV 8	0.5	No
fin.	2	487	-146.92	-2204			1592	490	SLV 8	0.22	No

Tabella dei coefficienti di sicurezza minimi

Stato limite	Coeff.s.	Comb.	Verifica
PF_SLV	0.387	SLV 13	No
V_SLV	0.026	SLV 3	No
PF_SLU	1.796	SLU 80	Si
V_SLU	0.378	SLU 83	No

Trave di accoppiamento 84

Verifiche condotte secondo D.M. 17-01-18 (N.T.C.)

Dati geometrici

X ini.	Y ini.	Z ini.inf.	Z ini.sup.	H ini.	X fin.	Y fin.	Z fin.inf.	Z fin.sup	H fin.	Luce	Spessore	R. Trazione
-11.093	3.334	6.45	7.9	1.45	-11.893	3.334	6.45	7.9	1.45	0.8	0.14	30000

Caratteristiche del materiale

(Circolare 7 21-01-19 C8.5.I) Muratura in mattoni pieni e malta di calce LC2_Corti

fb_	fhk	fvk0	fhmedio	τ0	fv0	μ	ϕ	fvk,lim	E	G	FC
120000			172500	9000	20000	0.577	0.767	6500	320000000	128000000	1.2

Verifiche a pressoflessione delle travi in muratura in combinazioni non sismiche

Sezione	γM	N	M	Mu	Comb.	c.s.	Verifica
ini.	3	1931	344.24	1493.39	SLU 74	4.34	Si
fin.	3	1931	1311.95	1493.39	SLU 74	1.14	Si
ini.	3	1939	340.23	1493.39	SLU 42	4.39	Si
fin.	3	1939	1318.71	1493.39	SLU 42	1.13	Si
ini.	3	1938	340.37	1493.39	SLU 41	4.39	Si
fin.	3	1938	1318.45	1493.39	SLU 41	1.13	Si
ini.	3	2071	381.64	1493.39	SLU 84	3.91	Si
fin.	3	2071	1422.93	1493.39	SLU 84	1.05	Si

Sezione	γM	N	M	Mu	Comb.	c.s.	Verifica
ini.	3	2070	381.78	1493.39	SLU 83	3.91	Si
fin.	3	2070	1422.67	1493.39	SLU 83	1.05	Si
ini.	3	1932	344.1	1493.39	SLU 75	4.34	Si
fin.	3	1932	1312.21	1493.39	SLU 75	1.14	Si
ini.	3	2069	384.07	1493.39	SLU 82	3.89	Si
fin.	3	2069	1424.77	1493.39	SLU 82	1.05	Si
ini.	3	1936	342.79	1493.39	SLU 39	4.36	Si
fin.	3	1936	1320.29	1493.39	SLU 39	1.13	Si
ini.	3	1937	342.66	1493.39	SLU 40	4.36	Si
fin.	3	1937	1320.55	1493.39	SLU 40	1.13	Si
ini.	3	2068	384.2	1493.39	SLU 81	3.89	Si
fin.	3	2068	1424.51	1493.39	SLU 81	1.05	Si

Verifiche a taglio delle travi in muratura secondo §C8.7.1.3.1 in combinazioni non sismiche

Sezione	γM	N	M	V	Vt	Vp	Vt fess. diag.	Vt,lim	Comb.	c.s.	Verifica
ini.	3	1482	300.58	1454			782	0	SLU 55	0	No
fin.	3	1482	1040.27	364			782	0	SLU 55	0	No
ini.	3	1542	287.1	1490			782	0	SLU 56	0	No
fin.	3	1542	1055.4	400			782	0	SLU 56	0	No
ini.	3	1678	329.35	1646			782	0	SLU 61	0	No
fin.	3	1678	1170.06	425			782	0	SLU 61	0	No
ini.	3	887	200.57	871			782	0	SLU 1	0	No
fin.	3	887	638.49	201			782	0	SLU 1	0	No
ini.	3	1543	286.96	1490			782	0	SLU 57	0	No
fin.	3	1543	1055.66	401			782	0	SLU 57	0	No
ini.	3	1541	289.39	1489			782	0	SLU 54	0	No
fin.	3	1541	1057.5	400			782	0	SLU 54	0	No
ini.	3	1540	289.52	1489			782	0	SLU 53	0	No
fin.	3	1540	1057.24	399			782	0	SLU 53	0	No
ini.	3	1483	298.38	1454			782	0	SLU 58	0	No
fin.	3	1483	1038	364			782	0	SLU 58	0	No
ini.	3	1677	329.49	1646			782	0	SLU 60	0	No
fin.	3	1677	1169.8	424			782	0	SLU 60	0	No
ini.	3	1484	298.25	1454			782	0	SLU 59	0	No
fin.	3	1484	1038.26	365			782	0	SLU 59	0	No

Verifiche a pressoflessione delle travi in muratura in combinazioni sismiche

Sezione	γM	N	M	Mu	Comb.	c.s.	Verifica
ini.	2	3912	-57.2	2240.09	SLV 11	39.16	Si
fin.	2	3930	3384.54	2240.09	SLV 11	0.66	No
ini.	2	4784	-498.15	2240.09	SLV 14	4.5	Si
fin.	2	5024	4165.64	2240.09	SLV 14	0.54	No
ini.	2	-3452	1004.83	2240.09	SLV 2	2.23	Si
fin.	2	-3662	-3440.44	2240.09	SLV 2	0.65	No
ini.	2	-2524	965.56	2240.09	SLV 3	2.32	Si
fin.	2	-2764	-2572.27	2240.09	SLV 3	0.87	No
ini.	2	4784	-498.15	2240.09	SLV 13	4.5	Si
fin.	2	5024	4165.64	2240.09	SLV 13	0.54	No
ini.	2	5712	-537.42	2240.09	SLV 15	4.17	Si
fin.	2	5922	5033.8	2240.09	SLV 15	0.45	No
ini.	2	-2524	965.56	2240.09	SLV 4	2.32	Si
fin.	2	-2764	-2572.27	2240.09	SLV 4	0.87	No
ini.	2	3912	-57.2	2240.09	SLV 12	39.16	Si
fin.	2	3930	3384.54	2240.09	SLV 12	0.66	No
ini.	2	-3452	1004.83	2240.09	SLV 1	2.23	Si
fin.	2	-3662	-3440.44	2240.09	SLV 1	0.65	No
ini.	2	5712	-537.42	2240.09	SLV 16	4.17	Si
fin.	2	5922	5033.8	2240.09	SLV 16	0.45	No

Verifiche a taglio delle travi in muratura secondo §C8.7.1.3.1 in combinazioni sismiche

Sezione	γM	N	M	V	Vt	Vp	Vt fess. diag.	Vt,lim	Comb.	c.s.	Verifica
ini.	2	4784	-498.15	6414			1173	0	SLV 14	0	No
fin.	2	5024	4165.64	5562			1173	0	SLV 14	0	No
ini.	2	3912	-57.2	4633			1173	0	SLV 11	0	No
fin.	2	3930	3384.54	3829			1173	0	SLV 11	0	No
ini.	2	1441	393.7	1131			1173	0	SLV 8	0	No
fin.	2	1324	1102.72	333			1173	0	SLV 8	0	No
ini.	2	4784	-498.15	6414			1173	0	SLV 13	0	No
fin.	2	5024	4165.64	5562			1173	0	SLV 13	0	No
ini.	2	5712	-537.42	7478			1173	0	SLV 15	0	No
fin.	2	5922	5033.8	6644			1173	0	SLV 15	0	No
ini.	2	1441	393.7	1131			1173	0	SLV 7	0	No
fin.	2	1324	1102.72	333			1173	0	SLV 7	0	No
ini.	2	3912	-57.2	4633			1173	0	SLV 12	0	No
fin.	2	3930	3384.54	3829			1173	0	SLV 12	0	No
ini.	2	-3452	1004.83	-5261			2553	926	SLV 2	0.18	No
fin.	2	-3662	-3440.44	-6091			2637	947	SLV 2	0.16	No
ini.	2	-3452	1004.83	-5261			2553	926	SLV 1	0.18	No
fin.	2	-3662	-3440.44	-6091			2637	947	SLV 1	0.16	No
ini.	2	5712	-537.42	7478			1173	0	SLV 16	0	No
fin.	2	5922	5033.8	6644			1173	0	SLV 16	0	No

Tabella dei coefficienti di sicurezza minimi

Stato limite	Coeff.s.	Comb.	Verifica
PF_SLV	0.445	SLV 15	No
V_SLV	0	SLV 7	No
PF_SLU	1.048	SLU 82	Si
V_SLU	0	SLU 1	No

Trave di accoppiamento 85

Verifiche condotte secondo D.M. 17-01-18 (N.T.C.)

Dati geometrici

X ini.	Y ini.	Z ini.inf.	Z ini.sup.	H ini.	X fin.	Y fin.	Z fin.inf.	Z fin.sup	H fin.	Luce	Spessore	R. Trazione
-9.988	3.334	6.45	7.9	1.45	-10.788	3.334	6.45	7.9	1.45	0.8	0.14	30000

Caratteristiche del materiale

(Circolare 7 21-01-19 C8.5.I) Muratura in mattoni pieni e malta di calce LC2_Corti

fb_	fhk	fvk0	fhmedio	τ0	fv0	μ	ϕ	fvk,lim	E	G	FC
120000			172500	9000	20000	0.577	0.767	6500	320000000	128000000	1.2

Verifiche a pressoflessione delle travi in muratura in combinazioni non sismiche

Sezione	γM	N	M	Mu	Comb.	c.s.	Verifica
ini.	3	278	15.36	1493.39	SLU 83	97.23	Si
fin.	3	1777	500.45	1493.39	SLU 83	2.98	Si
ini.	3	265	20.3	1493.39	SLU 74	73.58	Si
fin.	3	1667	460	1493.39	SLU 74	3.25	Si
ini.	3	255	20.19	1493.39	SLU 73	73.97	Si
fin.	3	1620	465.72	1493.39	SLU 73	3.21	Si
ini.	3	278	15.42	1493.39	SLU 81	96.83	Si
fin.	3	1777	502.24	1493.39	SLU 81	2.97	Si
ini.	3	265	20.24	1493.39	SLU 75	73.78	Si
fin.	3	1668	459.91	1493.39	SLU 75	3.25	Si
ini.	3	256	20.13	1493.39	SLU 76	74.2	Si
fin.	3	1621	463.92	1493.39	SLU 76	3.22	Si
ini.	3	256	20.15	1493.39	SLU 79	74.1	Si
fin.	3	1621	462.27	1493.39	SLU 79	3.23	Si
ini.	3	278	15.37	1493.39	SLU 82	97.18	Si
fin.	3	1777	502.16	1493.39	SLU 82	2.97	Si
ini.	3	279	15.3	1493.39	SLU 84	97.58	Si
fin.	3	1778	500.36	1493.39	SLU 84	2.98	Si
ini.	3	256	20.1	1493.39	SLU 80	74.3	Si
fin.	3	1621	462.19	1493.39	SLU 80	3.23	Si

Verifiche a taglio delle travi in muratura secondo §C8.7.1.3.1 in combinazioni non sismiche

Sezione	γM	N	M	V	Vt	Vp	Vt fess. diag.	Vt,lim	Comb.	c.s.	Verifica
ini.	3	231	22.2	3244			782	239	SLU 60	0.07	No
fin.	3	1460	426.51	97			782	0	SLU 60	0	No
ini.	3	208	26.88	2958			782	245	SLU 59	0.08	No
fin.	3	1305	386.45	8			782	0	SLU 59	0	No
ini.	3	131	27.75	1941			782	264	SLU 1	0.14	No
fin.	3	804	254.76	-122			782	0	SLU 1	0	No
ini.	3	217	26.96	3025			782	242	SLU 57	0.08	No
fin.	3	1351	382.38	-2			782	0	SLU 57	0	No
ini.	3	217	27.07	3030			782	242	SLU 53	0.08	No
fin.	3	1351	384.26	-4			782	0	SLU 53	0	No
ini.	3	217	27.01	3026			782	242	SLU 56	0.08	No
fin.	3	1351	382.46	-3			782	0	SLU 56	0	No
ini.	3	208	26.93	2958			782	245	SLU 58	0.08	No
fin.	3	1304	386.53	7			782	0	SLU 58	0	No
ini.	3	231	22.15	3244			782	239	SLU 61	0.07	No
fin.	3	1460	426.42	97			782	0	SLU 61	0	No
ini.	3	217	27.02	3030			782	242	SLU 54	0.08	No
fin.	3	1351	384.17	-3			782	0	SLU 54	0	No
ini.	3	208	26.9	2962			782	245	SLU 55	0.08	No
fin.	3	1304	388.19	7			782	0	SLU 55	0	No

Verifiche a pressoflessione delle travi in muratura in combinazioni sismiche

Sezione	γM	N	M	Mu	Comb.	c.s.	Verifica
ini.	2	-313	311.99	2240.09	SLV 4	7.18	Si
fin.	2	-1592	666.74	2240.09	SLV 4	3.36	Si
ini.	2	106	-41.76	2240.09	SLV 7	53.64	Si
fin.	2	1101	477.03	2240.09	SLV 7	4.7	Si
ini.	2	690	-366.51	2240.09	SLV 15	6.11	Si
fin.	2	4171	-21.54	2240.09	SLV 15	103.98	Si
ini.	2	-87	290.45	2240.09	SLV 6	7.71	Si
fin.	2	-831	330.77	2240.09	SLV 6	6.77	Si
ini.	2	106	-41.76	2240.09	SLV 8	53.64	Si
fin.	2	1101	477.03	2240.09	SLV 8	4.7	Si
ini.	2	-371	411.65	2240.09	SLV 2	5.44	Si
fin.	2	-2172	622.86	2240.09	SLV 2	3.6	Si
ini.	2	690	-366.51	2240.09	SLV 16	6.11	Si
fin.	2	4171	-21.54	2240.09	SLV 16	103.98	Si
ini.	2	-371	411.65	2240.09	SLV 1	5.44	Si
fin.	2	-2172	622.86	2240.09	SLV 1	3.6	Si
ini.	2	-87	290.45	2240.09	SLV 5	7.71	Si
fin.	2	-831	330.77	2240.09	SLV 5	6.77	Si
ini.	2	-313	311.99	2240.09	SLV 3	7.18	Si
fin.	2	-1592	666.74	2240.09	SLV 3	3.36	Si

Verifiche a taglio delle travi in muratura secondo §C8.7.1.3.1 in combinazioni sismiche

Sezione	γM	N	M	V	Vt	Vp	Vt fess. diag.	Vt,lim	Comb.	c.s.	Verifica
ini.	2	106	-41.76	1868			1173	418	SLV 7	0.22	No
fin.	2	1101	477.03	1733			1173	0	SLV 7	0	No
ini.	2	632	-266.85	4456			1173	271	SLV 14	0.06	No
fin.	2	3591	-65.42	1912			1173	0	SLV 14	0	No
ini.	2	632	-266.85	4456			1173	271	SLV 13	0.06	No
fin.	2	3591	-65.42	1912			1173	0	SLV 13	0	No

Sezione	γM	N	M	V	Vt	Vp	Vt fess. diag.	Vt,lim	Comb.	c.s.	Verifica
ini.	2	407	-245.31	3207			1173	342	SLV 12	0.11	No
fin.	2	2830	270.55	3353			1173	0	SLV 12	0	No
ini.	2	690	-366.51	4601			1173	250	SLV 15	0.05	No
fin.	2	4171	-21.54	3449			1173	0	SLV 15	0	No
ini.	2	214	86.9	2724			1173	392	SLV 9	0.14	No
fin.	2	898	124.29	-1772			1173	150	SLV 9	0.08	No
ini.	2	690	-366.51	4601			1173	250	SLV 16	0.05	No
fin.	2	4171	-21.54	3449			1173	0	SLV 16	0	No
ini.	2	214	86.9	2724			1173	392	SLV 10	0.14	No
fin.	2	898	124.29	-1772			1173	150	SLV 10	0.08	No
ini.	2	106	-41.76	1868			1173	418	SLV 8	0.22	No
fin.	2	1101	477.03	1733			1173	0	SLV 8	0	No
ini.	2	407	-245.31	3207			1173	342	SLV 11	0.11	No
fin.	2	2830	270.55	3353			1173	0	SLV 11	0	No

Tabella dei coefficienti di sicurezza minimi

Stato limite	Coeff.s.	Comb.	Verifica
PF_SLV	3.36	SLV 3	Si
V_SLV	0	SLV 7	No
PF_SLU	2.973	SLU 81	Si
V_SLU	0	SLU 1	No

Trave di accoppiamento 86

Verifiche condotte secondo D.M. 17-01-18 (N.T.C.)

Dati geometrici

X ini.	Y ini.	Z ini.inf.	Z ini.sup.	H ini.	X fin.	Y fin.	Z fin.inf.	Z fin.sup	H fin.	Luce	Spessore	R. Trazione
-17.796	6.536	4.35	5.25	0.9	-16.796	6.536	4.35	5.25	0.9	1	0.28	30000

Caratteristiche del materiale

(Circolare 7 21-01-19 C8.5.I) Muratura in mattoni pieni e malta di calce LC2_Corti

fb_	fhk	fvk0	fhmedio	τ0	fv0	μ	ϕ	fvk,lim	E	G	FC
120000			172500	9000	20000	0.577	0.767	6500	320000000	128000000	1.2

Verifiche a pressoflessione delle travi in muratura in combinazioni non sismiche

Sezione	γM	N	M	Mu	Comb.	c.s.	Verifica
ini.	3	-596	-68.88	1150.68	SLU 84	16.71	Si
fin.	3	-1296	388.99	1150.68	SLU 84	2.96	Si
ini.	3	-555	-81.68	1150.68	SLU 79	14.09	Si
fin.	3	-1325	390.94	1150.68	SLU 79	2.94	Si
ini.	3	-630	-54.57	1150.68	SLU 81	21.09	Si
fin.	3	-1255	374.5	1150.68	SLU 81	3.07	Si
ini.	3	-555	-80.62	1150.68	SLU 80	14.27	Si
fin.	3	-1318	389.76	1150.68	SLU 80	2.95	Si
ini.	3	-629	-53.51	1150.68	SLU 82	21.5	Si
fin.	3	-1248	373.31	1150.68	SLU 82	3.08	Si
ini.	3	-597	-63.98	1150.68	SLU 75	17.99	Si
fin.	3	-1279	376.61	1150.68	SLU 75	3.06	Si
ini.	3	-563	-79.34	1150.68	SLU 78	14.5	Si
fin.	3	-1327	392.29	1150.68	SLU 78	2.93	Si
ini.	3	-597	-65.04	1150.68	SLU 74	17.69	Si
fin.	3	-1286	377.79	1150.68	SLU 74	3.05	Si
ini.	3	-564	-80.4	1150.68	SLU 77	14.31	Si
fin.	3	-1335	393.47	1150.68	SLU 77	2.92	Si
ini.	3	-597	-69.94	1150.68	SLU 83	16.45	Si
fin.	3	-1303	390.18	1150.68	SLU 83	2.95	Si

Verifiche a taglio delle travi in muratura secondo §C8.7.1.3.1 in combinazioni non sismiche

Sezione	γM	N	M	V	Vt	Vp	Vt fess. diag.	Vt,lim	Comb.	c.s.	Verifica
ini.	3	-596	-68.88	-749			1088	430	SLU 84	0.57	No
fin.	3	-1296	388.99	3731			1340	524	SLU 84	0.14	No
ini.	3	-597	-63.98	-761			1088	430	SLU 75	0.56	No
fin.	3	-1279	376.61	3668			1334	522	SLU 75	0.14	No
ini.	3	-555	-81.68	-706			1073	424	SLU 79	0.6	No
fin.	3	-1325	390.94	3774			1350	528	SLU 79	0.14	No
ini.	3	-564	-80.4	-728			1077	425	SLU 77	0.58	No
fin.	3	-1335	393.47	3816			1354	529	SLU 77	0.14	No
ini.	3	-555	-80.62	-711			1073	424	SLU 80	0.6	No
fin.	3	-1318	389.76	3769			1348	527	SLU 80	0.14	No
ini.	3	-563	-79.34	-734			1076	425	SLU 78	0.58	No
fin.	3	-1327	392.29	3811			1351	528	SLU 78	0.14	No
ini.	3	-597	-69.94	-744			1088	430	SLU 83	0.58	No
fin.	3	-1303	390.18	3736			1343	525	SLU 83	0.14	No
ini.	3	-587	-64.55	-742			1085	428	SLU 76	0.58	No
fin.	3	-1264	373.29	3623			1329	520	SLU 76	0.14	No
ini.	3	-629	-53.51	-777			1100	435	SLU 82	0.56	No
fin.	3	-1248	373.31	3589			1323	518	SLU 82	0.14	No
ini.	3	-597	-65.04	-756			1089	430	SLU 74	0.57	No
fin.	3	-1286	377.79	3673			1337	523	SLU 74	0.14	No

Verifiche a pressoflessione delle travi in muratura in combinazioni sismiche

Sezione	γM	N	M	Mu	Comb.	c.s.	Verifica
ini.	2	-3983	1405.07	1726.01	SLV 16	1.23	Si
fin.	2	3018	-659.8	1726.01	SLV 16	2.62	Si
ini.	2	2594	-1405.28	1726.01	SLV 4	1.23	Si
fin.	2	-4895	1133.69	1726.01	SLV 4	1.52	Si

Sezione	γM	N	M	Mu	Comb.	c.s.	Verifica
ini.	2	-3523	1339.79	1726.01	SLV 14	1.29	Si
fin.	2	3102	-630.1	1726.01	SLV 14	2.74	Si
ini.	2	3054	-1470.56	1726.01	SLV 2	1.17	Si
fin.	2	-4812	1163.39	1726.01	SLV 2	1.48	Si
ini.	2	-3983	1405.07	1726.01	SLV 15	1.23	Si
fin.	2	3018	-659.8	1726.01	SLV 15	2.62	Si
ini.	2	2594	-1405.28	1726.01	SLV 3	1.23	Si
fin.	2	-4895	1133.69	1726.01	SLV 3	1.52	Si
ini.	2	1289	-563.11	1726.01	SLV 6	3.07	Si
fin.	2	-1944	570.32	1726.01	SLV 6	3.03	Si
ini.	2	-3523	1339.79	1726.01	SLV 13	1.29	Si
fin.	2	3102	-630.1	1726.01	SLV 13	2.74	Si
ini.	2	1289	-563.11	1726.01	SLV 5	3.07	Si
fin.	2	-1944	570.32	1726.01	SLV 5	3.03	Si
ini.	2	3054	-1470.56	1726.01	SLV 1	1.17	Si
fin.	2	-4812	1163.39	1726.01	SLV 1	1.48	Si

Verifiche a taglio delle travi in muratura secondo §C8.7.1.3.1 in combinazioni sismiche

Sezione	γM	N	M	V	Vt	Vp	Vt fess. diag.	Vt,lim	Comb.	c.s.	Verifica
ini.	2	3054	-1470.56	5287			1310	0	SLV 2	0	No
fin.	2	-4812	1163.39	7541			3042	1082	SLV 2	0.14	No
ini.	2	1289	-563.11	1903			1310	0	SLV 5	0	No
fin.	2	-1944	570.32	2465			2010	786	SLV 5	0.32	No
ini.	2	-3523	1339.79	-5949			2578	961	SLV 14	0.16	No
fin.	2	3102	-630.1	-3559			1310	0	SLV 14	0	No
ini.	2	3054	-1470.56	5287			1310	0	SLV 1	0	No
fin.	2	-4812	1163.39	7541			3042	1082	SLV 1	0.14	No
ini.	2	2594	-1405.28	4817			1310	0	SLV 4	0	No
fin.	2	-4895	1133.69	8562			3072	1090	SLV 4	0.13	No
ini.	2	2594	-1405.28	4817			1310	0	SLV 3	0	No
fin.	2	-4895	1133.69	8562			3072	1090	SLV 3	0.13	No
ini.	2	-3983	1405.07	-6419			2744	1006	SLV 16	0.16	No
fin.	2	3018	-659.8	-2538			1310	0	SLV 16	0	No
ini.	2	-3983	1405.07	-6419			2744	1006	SLV 15	0.16	No
fin.	2	3018	-659.8	-2538			1310	0	SLV 15	0	No
ini.	2	1289	-563.11	1903			1310	0	SLV 6	0	No
fin.	2	-1944	570.32	2465			2010	786	SLV 6	0.32	No
ini.	2	-3523	1339.79	-5949			2578	961	SLV 13	0.16	No
fin.	2	3102	-630.1	-3559			1310	0	SLV 13	0	No

Tabella dei coefficienti di sicurezza minimi

Stato limite	Coeff.s.	Comb.	Verifica
PF_SLV	1.174	SLV 1	Si
V_SLV	0	SLV 1	No
PF_SLU	2.924	SLU 77	Si
V_SLU	0.139	SLU 78	No

Trave di accoppiamento 87

Verifiche condotte secondo D.M. 17-01-18 (N.T.C.)

Dati geometrici

X ini.	Y ini.	Z ini.inf.	Z ini.sup.	H ini.	X fin.	Y fin.	Z fin.inf.	Z fin.sup	H fin.	Luce	Spessore	R. Trazione
-17.796	6.536	7.15	7.9	0.75	-16.796	6.536	7.15	7.9	0.75	1	0.28	30000

Caratteristiche del materiale

(Circolare 7 21-01-19 C8.5.I) Muratura in mattoni pieni e malta di calce LC2_Corti

fb_	fhk	fvk0	fhmedio	τ0	fv0	μ	ϕ	fvk,lim	E	G	FC
120000			172500	9000	20000	0.577	0.767	6500	320000000	128000000	1.2

Verifiche a pressoflessione delle travi in muratura in combinazioni non sismiche

Sezione	γM	N	M	Mu	Comb.	c.s.	Verifica
ini.	3	-800	-358.14	799.08	SLU 76	2.23	Si
fin.	3	93	-7.97	799.08	SLU 76	100.23	Si
ini.	3	-805	-361.1	799.08	SLU 75	2.21	Si
fin.	3	91	-9.4	799.08	SLU 75	85.02	Si
ini.	3	-845	-382.17	799.08	SLU 78	2.09	Si
fin.	3	160	-2.16	799.08	SLU 78	369.77	Si
ini.	3	-812	-362.46	799.08	SLU 74	2.2	Si
fin.	3	91	-8.93	799.08	SLU 74	89.52	Si
ini.	3	-852	-381.47	799.08	SLU 79	2.09	Si
fin.	3	161	0.05	799.08	SLU 79	15401.29	Si
ini.	3	-845	-380.11	799.08	SLU 80	2.1	Si
fin.	3	162	-0.42	799.08	SLU 80	1901.56	Si
ini.	3	-810	-354.85	799.08	SLU 81	2.25	Si
fin.	3	9	-14.87	799.08	SLU 81	53.73	Si
ini.	3	-850	-375.92	799.08	SLU 83	2.13	Si
fin.	3	78	-7.63	799.08	SLU 83	104.67	Si
ini.	3	-843	-374.56	799.08	SLU 84	2.13	Si
fin.	3	78	-8.11	799.08	SLU 84	98.57	Si
ini.	3	-852	-383.53	799.08	SLU 77	2.08	Si
fin.	3	160	-1.69	799.08	SLU 77	473.13	Si

Verifiche a taglio delle travi in muratura secondo §C8.7.1.3.1 in combinazioni non sismiche

Sezione	γM	N	M	V	Vt	Vp	Vt fess. diag.	Vt,lim	Comb.	c.s.	Verifica
ini.	3	-803	-353.49	2830			847	334	SLU 82	0.12	No
fin.	3	9	-15.34	-2741			607	227	SLU 82	0.08	No

Sezione	γM	N	M	V	Vt	Vp	Vt fess. diag.	Vt,lim	Comb.	c.s.	Verifica
ini.	3	-843	-374.56	2945			859	339	SLU 84	0.12	No
fin.	3	78	-8.11	-2751			607	215	SLU 84	0.08	No
ini.	3	-812	-362.46	2842			850	335	SLU 74	0.12	No
fin.	3	91	-8.93	-2638			607	213	SLU 74	0.08	No
ini.	3	-845	-380.11	2930			860	339	SLU 80	0.12	No
fin.	3	162	-0.42	-2616			607	200	SLU 80	0.08	No
ini.	3	-800	-358.14	2811			847	334	SLU 76	0.12	No
fin.	3	93	-7.97	-2608			607	213	SLU 76	0.08	No
ini.	3	-845	-382.17	2952			860	339	SLU 78	0.11	No
fin.	3	160	-2.16	-2653			607	200	SLU 78	0.08	No
ini.	3	-852	-381.47	2934			862	340	SLU 79	0.12	No
fin.	3	161	0.05	-2611			607	200	SLU 79	0.08	No
ini.	3	-852	-383.53	2957			862	340	SLU 77	0.11	No
fin.	3	160	-1.69	-2649			607	200	SLU 77	0.08	No
ini.	3	-850	-375.92	2950			861	340	SLU 83	0.12	No
fin.	3	78	-7.63	-2747			607	215	SLU 83	0.08	No
ini.	3	-805	-361.1	2837			848	335	SLU 75	0.12	No
fin.	3	91	-9.4	-2643			607	213	SLU 75	0.08	No

Verifiche a pressoflessione delle travi in muratura in combinazioni sismiche

Sezione	γM	N	M	Mu	Comb.	c.s.	Verifica
ini.	2	2042	818.33	1198.62	SLV 16	1.46	Si
fin.	2	-3091	-568.7	1198.62	SLV 16	2.11	Si
ini.	2	-3104	-1288.44	1198.62	SLV 1	0.93	No
fin.	2	3162	547.4	1198.62	SLV 1	2.19	Si
ini.	2	-3104	-1288.44	1198.62	SLV 2	0.93	No
fin.	2	3162	547.4	1198.62	SLV 2	2.19	Si
ini.	2	-2617	-671.8	1198.62	SLV 5	1.78	Si
fin.	2	-125	27.46	1198.62	SLV 5	43.64	Si
ini.	2	1176	738.73	1198.62	SLV 13	1.62	Si
fin.	2	-3816	-653.95	1198.62	SLV 13	1.83	Si
ini.	2	2042	818.33	1198.62	SLV 15	1.46	Si
fin.	2	-3091	-568.7	1198.62	SLV 15	2.11	Si
ini.	2	-2238	-1208.84	1198.62	SLV 4	0.99	No
fin.	2	3887	632.66	1198.62	SLV 4	1.89	Si
ini.	2	-2238	-1208.84	1198.62	SLV 3	0.99	No
fin.	2	3887	632.66	1198.62	SLV 3	1.89	Si
ini.	2	1176	738.73	1198.62	SLV 14	1.62	Si
fin.	2	-3816	-653.95	1198.62	SLV 14	1.83	Si
ini.	2	-2617	-671.8	1198.62	SLV 6	1.78	Si
fin.	2	-125	27.46	1198.62	SLV 6	43.64	Si

Verifiche a taglio delle travi in muratura secondo §C8.7.1.3.1 in combinazioni sismiche

Sezione	γM	N	M	V	Vt	Vp	Vt fess. diag.	Vt,lim	Comb.	c.s.	Verifica
ini.	2	271	-406.46	4043			910	295	SLV 7	0.07	No
fin.	2	2290	311.65	-1377			910	0	SLV 7	0	No
ini.	2	-3104	-1288.44	5700			1841	681	SLV 2	0.12	No
fin.	2	3162	547.4	2523			910	0	SLV 2	0	No
ini.	2	-3104	-1288.44	5700			1841	681	SLV 1	0.12	No
fin.	2	3162	547.4	2523			910	0	SLV 1	0	No
ini.	2	1176	738.73	-2535			910	0	SLV 14	0	No
fin.	2	-3816	-653.95	-5548			2055	737	SLV 14	0.13	No
ini.	2	-2238	-1208.84	6266			1581	606	SLV 4	0.1	No
fin.	2	3887	632.66	2027			910	0	SLV 4	0	No
ini.	2	1555	201.7	1572			910	0	SLV 12	0	No
fin.	2	196	-48.76	-3798			910	309	SLV 12	0.08	No
ini.	2	-2238	-1208.84	6266			1581	606	SLV 3	0.1	No
fin.	2	3887	632.66	2027			910	0	SLV 3	0	No
ini.	2	1176	738.73	-2535			910	0	SLV 13	0	No
fin.	2	-3816	-653.95	-5548			2055	737	SLV 13	0.13	No
ini.	2	1555	201.7	1572			910	0	SLV 11	0	No
fin.	2	196	-48.76	-3798			910	309	SLV 11	0.08	No
ini.	2	271	-406.46	4043			910	295	SLV 8	0.07	No
fin.	2	2290	311.65	-1377			910	0	SLV 8	0	No

Tabella dei coefficienti di sicurezza minimi

Stato limite	Coeff.s.	Comb.	Verifica
PF_SLV	0.93	SLV 1	No
V_SLV	0	SLV 1	No
PF_SLU	2.084	SLU 77	Si
V_SLU	0.076	SLU 78	No

Trave di accoppiamento 88

Verifiche condotte secondo D.M. 17-01-18 (N.T.C.)

Dati geometrici

X ini.	Y ini.	Z ini.inf.	Z ini.sup.	H ini.	X fin.	Y fin.	Z fin.inf.	Z fin.sup	H fin.	Luce	Spessore	R. Trazione
-12.901	6.536	4.35	5.25	0.9	-11.901	6.536	4.35	5.25	0.9	1	0.28	30000

Caratteristiche del materiale

(Circolare 7 21-01-19 C8.5.I) Muratura in mattoni pieni e malta di calce LC2_Corti

fb_	fhk	fvk0	fhmedio	τ0	fv0	μ	ϕ	fvk,lim	E	G	FC
120000			172500	9000	20000	0.577	0.767	6500	320000000	128000000	1.2

Verifiche a pressoflessione delle travi in muratura in combinazioni non sismiche

Sezione	γM	N	M	Mu	Comb.	c.s.	Verifica
ini.	3	-1232	184.74	1150.68	SLU 80	6.23	Si
fin.	3	-1274	246.11	1150.68	SLU 80	4.68	Si
ini.	3	-1233	183.73	1150.68	SLU 79	6.26	Si
fin.	3	-1278	247.39	1150.68	SLU 79	4.65	Si
ini.	3	-1265	180.16	1150.68	SLU 81	6.39	Si
fin.	3	-1318	249.56	1150.68	SLU 81	4.61	Si
ini.	3	-1243	186.6	1150.68	SLU 78	6.17	Si
fin.	3	-1286	249.37	1150.68	SLU 78	4.61	Si
ini.	3	-1270	184.77	1150.68	SLU 83	6.23	Si
fin.	3	-1321	252.79	1150.68	SLU 83	4.55	Si
ini.	3	-1244	185.6	1150.68	SLU 77	6.2	Si
fin.	3	-1291	250.65	1150.68	SLU 77	4.59	Si
ini.	3	-1239	181.99	1150.68	SLU 75	6.32	Si
fin.	3	-1284	246.14	1150.68	SLU 75	4.67	Si
ini.	3	-1239	180.99	1150.68	SLU 74	6.36	Si
fin.	3	-1288	247.42	1150.68	SLU 74	4.65	Si
ini.	3	-1265	181.17	1150.68	SLU 82	6.35	Si
fin.	3	-1314	248.28	1150.68	SLU 82	4.63	Si
ini.	3	-1270	185.78	1150.68	SLU 84	6.19	Si
fin.	3	-1316	251.52	1150.68	SLU 84	4.57	Si

Verifiche a taglio delle travi in muratura secondo §C8.7.1.3.1 in combinazioni non sismiche

Sezione	γM	N	M	V	Vt	Vp	Vt fess. diag.	Vt,lim	Comb.	c.s.	Verifica
ini.	3	-1232	184.74	-1568			1317	516	SLU 80	0.33	No
fin.	3	-1274	246.11	1799			1332	521	SLU 80	0.29	No
ini.	3	-1239	180.99	-1535			1320	517	SLU 74	0.34	No
fin.	3	-1288	247.42	1783			1337	523	SLU 74	0.29	No
ini.	3	-1270	184.77	-1570			1331	521	SLU 83	0.33	No
fin.	3	-1321	252.79	1824			1349	527	SLU 83	0.29	No
ini.	3	-1243	186.6	-1588			1321	518	SLU 78	0.33	No
fin.	3	-1286	249.37	1823			1336	523	SLU 78	0.29	No
ini.	3	-1239	181.99	-1540			1319	517	SLU 75	0.34	No
fin.	3	-1284	246.14	1780			1336	523	SLU 75	0.29	No
ini.	3	-1244	185.6	-1583			1321	518	SLU 77	0.33	No
fin.	3	-1291	250.65	1827			1338	523	SLU 77	0.29	No
ini.	3	-1233	183.73	-1563			1317	516	SLU 79	0.33	No
fin.	3	-1278	247.39	1802			1334	522	SLU 79	0.29	No
ini.	3	-1270	185.78	-1575			1331	521	SLU 84	0.33	No
fin.	3	-1316	251.52	1820			1347	527	SLU 84	0.29	No
ini.	3	-1265	181.17	-1527			1329	520	SLU 82	0.34	No
fin.	3	-1314	248.28	1777			1346	526	SLU 82	0.3	No
ini.	3	-1265	180.16	-1522			1329	520	SLU 81	0.34	No
fin.	3	-1318	249.56	1780			1348	527	SLU 81	0.3	No

Verifiche a pressoflessione delle travi in muratura in combinazioni sismiche

Sezione	γM	N	M	Mu	Comb.	c.s.	Verifica
ini.	2	-3637	1518.98	1726.01	SLV 16	1.14	Si
fin.	2	1723	-1149.56	1726.01	SLV 16	1.5	Si
ini.	2	1893	-1269.68	1726.01	SLV 1	1.36	Si
fin.	2	-3535	1491.83	1726.01	SLV 1	1.16	Si
ini.	2	1640	-1234.32	1726.01	SLV 4	1.4	Si
fin.	2	-4014	1541.18	1726.01	SLV 4	1.12	Si
ini.	2	1640	-1234.32	1726.01	SLV 3	1.4	Si
fin.	2	-4014	1541.18	1726.01	SLV 3	1.12	Si
ini.	2	1893	-1269.68	1726.01	SLV 2	1.36	Si
fin.	2	-3535	1491.83	1726.01	SLV 2	1.16	Si
ini.	2	-501	-229.4	1726.01	SLV 7	7.52	Si
fin.	2	-2566	656.99	1726.01	SLV 7	2.63	Si
ini.	2	-3384	1483.62	1726.01	SLV 13	1.16	Si
fin.	2	2203	-1198.91	1726.01	SLV 13	1.44	Si
ini.	2	-501	-229.4	1726.01	SLV 8	7.52	Si
fin.	2	-2566	656.99	1726.01	SLV 8	2.63	Si
ini.	2	-3384	1483.62	1726.01	SLV 14	1.16	Si
fin.	2	2203	-1198.91	1726.01	SLV 14	1.44	Si
ini.	2	-3637	1518.98	1726.01	SLV 15	1.14	Si
fin.	2	1723	-1149.56	1726.01	SLV 15	1.5	Si

Verifiche a taglio delle travi in muratura secondo §C8.7.1.3.1 in combinazioni sismiche

Sezione	γM	N	M	V	Vt	Vp	Vt fess. diag.	Vt,lim	Comb.	c.s.	Verifica
ini.	2	1893	-1269.68	4366			1310	0	SLV 1	0	No
fin.	2	-3535	1491.83	6128			2583	962	SLV 1	0.16	No
ini.	2	-3384	1483.62	-6056			2529	947	SLV 13	0.16	No
fin.	2	2203	-1198.91	-4246			1310	0	SLV 13	0	No
ini.	2	-3384	1483.62	-6056			2529	947	SLV 14	0.16	No
fin.	2	2203	-1198.91	-4246			1310	0	SLV 14	0	No
ini.	2	-501	-229.4	-103			1491	583	SLV 8	5.63	Si
fin.	2	-2566	656.99	3664			2234	859	SLV 8	0.23	No
ini.	2	1893	-1269.68	4366			1310	0	SLV 2	0	No
fin.	2	-3535	1491.83	6128			2583	962	SLV 2	0.16	No
ini.	2	-3637	1518.98	-6435			2619	972	SLV 16	0.15	No
fin.	2	1723	-1149.56	-3707			1310	0	SLV 16	0	No
ini.	2	-501	-229.4	-103			1491	583	SLV 7	5.63	Si
fin.	2	-2566	656.99	3664			2234	859	SLV 7	0.23	No
ini.	2	-3637	1518.98	-6435			2619	972	SLV 15	0.15	No
fin.	2	1723	-1149.56	-3707			1310	0	SLV 15	0	No
ini.	2	1640	-1234.32	3987			1310	0	SLV 3	0	No
fin.	2	-4014	1541.18	6667			2755	1009	SLV 3	0.15	No
ini.	2	1640	-1234.32	3987			1310	0	SLV 4	0	No
fin.	2	-4014	1541.18	6667			2755	1009	SLV 4	0.15	No

Tabella dei coefficienti di sicurezza minimi

Stato limite	Coeff.s.	Comb.	Verifica
PF_SLV	1.12	SLV 3	Si
V_SLV	0	SLV 1	No
PF_SLU	4.552	SLU 83	Si
V_SLU	0.287	SLU 77	No

Trave di accoppiamento 89

Verifiche condotte secondo D.M. 17-01-18 (N.T.C.)

Dati geometrici

X ini.	Y ini.	Z ini.inf.	Z ini.sup.	H ini.	X fin.	Y fin.	Z fin.inf.	Z fin.sup	H fin.	Luce	Spessore	R. Trazione
-12.901	6.536	7.15	7.9	0.75	-11.901	6.536	7.15	7.9	0.75	1	0.28	30000

Caratteristiche del materiale

(Circolare 7 21-01-19 C8.5.I) Muratura in mattoni pieni e malta di calce LC2_Corti

fb_	fhk	fvk0	fhmedio	τ0	fv0	μ	ϕ	fvk,lim	E	G	FC
120000			172500	9000	20000	0.577	0.767	6500	320000000	128000000	1.2

Verifiche a pressoflessione delle travi in muratura in combinazioni non sismiche

Sezione	γM	N	M	Mu	Comb.	c.s.	Verifica
ini.	3	-645	-213.5	799.08	SLU 74	3.74	Si
fin.	3	-580	-257.48	799.08	SLU 74	3.1	Si
ini.	3	-640	-212.45	799.08	SLU 75	3.76	Si
fin.	3	-579	-258.23	799.08	SLU 75	3.09	Si
ini.	3	-683	-218.26	799.08	SLU 82	3.66	Si
fin.	3	-605	-258.37	799.08	SLU 82	3.09	Si
ini.	3	-688	-219.3	799.08	SLU 81	3.64	Si
fin.	3	-606	-257.62	799.08	SLU 81	3.1	Si
ini.	3	-628	-214.91	799.08	SLU 77	3.72	Si
fin.	3	-578	-266.58	799.08	SLU 77	3	Si
ini.	3	-623	-213.87	799.08	SLU 78	3.74	Si
fin.	3	-577	-267.33	799.08	SLU 78	2.99	Si
ini.	3	-613	-210.77	799.08	SLU 80	3.79	Si
fin.	3	-571	-264.77	799.08	SLU 80	3.02	Si
ini.	3	-666	-219.67	799.08	SLU 84	3.64	Si
fin.	3	-603	-267.47	799.08	SLU 84	2.99	Si
ini.	3	-618	-211.81	799.08	SLU 79	3.77	Si
fin.	3	-572	-264.02	799.08	SLU 79	3.03	Si
ini.	3	-671	-220.72	799.08	SLU 83	3.62	Si
fin.	3	-604	-266.72	799.08	SLU 83	3	Si

Verifiche a taglio delle travi in muratura secondo §C8.7.1.3.1 in combinazioni non sismiche

Sezione	γM	N	M	V	Vt	Vp	Vt fess. diag.	Vt,lim	Comb.	c.s.	Verifica
ini.	3	-666	-219.67	1976			806	319	SLU 84	0.16	No
fin.	3	-603	-267.47	-2123			788	311	SLU 84	0.15	No
ini.	3	-628	-214.91	1954			795	314	SLU 77	0.16	No
fin.	3	-578	-266.58	-2116			780	308	SLU 77	0.15	No
ini.	3	-645	-213.5	1918			800	316	SLU 74	0.16	No
fin.	3	-580	-257.48	-2055			781	309	SLU 74	0.15	No
ini.	3	-618	-211.81	1931			792	313	SLU 79	0.16	No
fin.	3	-572	-264.02	-2097			778	308	SLU 79	0.15	No
ini.	3	-627	-208.66	1889			795	314	SLU 76	0.17	No
fin.	3	-573	-256.17	-2041			778	308	SLU 76	0.15	No
ini.	3	-671	-220.72	1979			808	319	SLU 83	0.16	No
fin.	3	-604	-266.72	-2119			788	312	SLU 83	0.15	No
ini.	3	-623	-213.87	1951			794	314	SLU 78	0.16	No
fin.	3	-577	-267.33	-2120			780	308	SLU 78	0.15	No
ini.	3	-683	-218.26	1940			811	321	SLU 82	0.17	No
fin.	3	-605	-258.37	-2061			788	312	SLU 82	0.15	No
ini.	3	-613	-210.77	1927			791	313	SLU 80	0.16	No
fin.	3	-571	-264.77	-2100			778	308	SLU 80	0.15	No
ini.	3	-640	-212.45	1915			799	316	SLU 75	0.16	No
fin.	3	-579	-258.23	-2058			780	309	SLU 75	0.15	No

Verifiche a pressoflessione delle travi in muratura in combinazioni sismiche

Sezione	γM	N	M	Mu	Comb.	c.s.	Verifica
ini.	2	1130	737.8	1198.62	SLV 14	1.62	Si
fin.	2	-2637	-991.73	1198.62	SLV 14	1.21	Si
ini.	2	-816	91.88	1198.62	SLV 9	13.05	Si
fin.	2	-1892	-459.18	1198.62	SLV 9	2.61	Si
ini.	2	-2025	-1026.28	1198.62	SLV 4	1.17	Si
fin.	2	1846	652.52	1198.62	SLV 4	1.84	Si
ini.	2	-2025	-1026.28	1198.62	SLV 3	1.17	Si
fin.	2	1846	652.52	1198.62	SLV 3	1.84	Si
ini.	2	-2580	-1045.07	1198.62	SLV 2	1.15	Si
fin.	2	1302	624.21	1198.62	SLV 2	1.92	Si
ini.	2	1130	737.8	1198.62	SLV 13	1.62	Si
fin.	2	-2637	-991.73	1198.62	SLV 13	1.21	Si
ini.	2	-2580	-1045.07	1198.62	SLV 1	1.15	Si
fin.	2	1302	624.21	1198.62	SLV 1	1.92	Si
ini.	2	1686	756.59	1198.62	SLV 16	1.58	Si
fin.	2	-2094	-963.42	1198.62	SLV 16	1.24	Si
ini.	2	-816	91.88	1198.62	SLV 10	13.05	Si
fin.	2	-1892	-459.18	1198.62	SLV 10	2.61	Si
ini.	2	1686	756.59	1198.62	SLV 15	1.58	Si

Sezione	γM	N	M	Mu	Comb.	c.s.	Verifica
fin.	2	-2094	-963.42	1198.62	SLV 15	1.24	Si

Verifiche a taglio delle travi in muratura secondo §C8.7.1.3.1 in combinazioni sismiche

Sezione	γM	N	M	V	Vt	Vp	Vt fess. diag.	Vt,lim	Comb.	c.s.	Verifica
ini.	2	-2025	-1026.28	4655			1517	586	SLV 3	0.13	No
fin.	2	1846	652.52	1788			910	0	SLV 3	0	No
ini.	2	-2580	-1045.07	4376			1684	637	SLV 2	0.15	No
fin.	2	1302	624.21	2038			910	0	SLV 2	0	No
ini.	2	-78	-380.36	2724			933	355	SLV 8	0.13	No
fin.	2	1101	119.97	-808			910	0	SLV 8	0	No
ini.	2	-78	-380.36	2724			933	355	SLV 7	0.13	No
fin.	2	1101	119.97	-808			910	0	SLV 7	0	No
ini.	2	1130	737.8	-2068			910	0	SLV 13	0	No
fin.	2	-2637	-991.73	-4549			1701	642	SLV 13	0.14	No
ini.	2	1686	756.59	-1789			910	0	SLV 15	0	No
fin.	2	-2094	-963.42	-4798			1538	592	SLV 15	0.12	No
ini.	2	-2025	-1026.28	4655			1517	586	SLV 4	0.13	No
fin.	2	1846	652.52	1788			910	0	SLV 4	0	No
ini.	2	1130	737.8	-2068			910	0	SLV 14	0	No
fin.	2	-2637	-991.73	-4549			1701	642	SLV 14	0.14	No
ini.	2	1686	756.59	-1789			910	0	SLV 16	0	No
fin.	2	-2094	-963.42	-4798			1538	592	SLV 16	0.12	No
ini.	2	-2580	-1045.07	4376			1684	637	SLV 1	0.15	No
fin.	2	1302	624.21	2038			910	0	SLV 1	0	No

Tabella dei coefficienti di sicurezza minimi

Stato limite	Coeff.s.	Comb.	Verifica
PF_SLV	1.147	SLV 1	Si
V_SLV	0	SLV 1	No
PF_SLU	2.988	SLU 84	Si
V_SLU	0.145	SLU 78	No

Trave di accoppiamento 90

Verifiche condotte secondo D.M. 17-01-18 (N.T.C.)

Dati geometrici

X ini.	Y ini.	Z ini.inf.	Z ini.sup.	H ini.	X fin.	Y fin.	Z fin.inf.	Z fin.sup	H fin.	Luce	Spessore	R. Trazione
-8.007	6.536	4.35	5.25	0.9	-7.007	6.536	4.35	5.25	0.9	1	0.28	30000

Caratteristiche del materiale

(Circolare 7 21-01-19 C8.5.I) Muratura in mattoni pieni e malta di calce LC2_Corti

fb_	fhk	fvk0	fhmedio	τ0	fv0	μ	ϕ	fvk,lim	E	G	FC
120000			172500	9000	20000	0.577	0.767	6500	320000000	128000000	1.2

Verifiche a pressoflessione delle travi in muratura in combinazioni non sismiche

Sezione	γM	N	M	Mu	Comb.	c.s.	Verifica
ini.	3	-1250	371.36	1150.68	SLU 84	3.1	Si
fin.	3	-703	-44.71	1150.68	SLU 84	25.73	Si
ini.	3	-1256	365.94	1150.68	SLU 80	3.14	Si
fin.	3	-703	-42.74	1150.68	SLU 80	26.92	Si
ini.	3	-1218	362.07	1150.68	SLU 82	3.18	Si
fin.	3	-695	-42.85	1150.68	SLU 82	26.85	Si
ini.	3	-1241	361.01	1150.68	SLU 74	3.19	Si
fin.	3	-699	-42.13	1150.68	SLU 74	27.31	Si
ini.	3	-1223	362.84	1150.68	SLU 81	3.17	Si
fin.	3	-697	-43.11	1150.68	SLU 81	26.69	Si
ini.	3	-1274	370.31	1150.68	SLU 77	3.11	Si
fin.	3	-708	-43.99	1150.68	SLU 77	26.16	Si
ini.	3	-1236	360.23	1150.68	SLU 75	3.19	Si
fin.	3	-697	-41.87	1150.68	SLU 75	27.48	Si
ini.	3	-1256	372.14	1150.68	SLU 83	3.09	Si
fin.	3	-706	-44.97	1150.68	SLU 83	25.59	Si
ini.	3	-1268	369.53	1150.68	SLU 78	3.11	Si
fin.	3	-705	-43.73	1150.68	SLU 78	26.31	Si
ini.	3	-1261	366.72	1150.68	SLU 79	3.14	Si
fin.	3	-706	-43	1150.68	SLU 79	26.76	Si

Verifiche a taglio delle travi in muratura secondo §C8.7.1.3.1 in combinazioni non sismiche

Sezione	γM	N	M	V	Vt	Vp	Vt fess. diag.	Vt,lim	Comb.	c.s.	Verifica
ini.	3	-1268	369.53	-3536			1330	521	SLU 78	0.15	No
fin.	3	-705	-43.73	815			1127	446	SLU 78	0.55	No
ini.	3	-1220	356.12	-3386			1313	515	SLU 76	0.15	No
fin.	3	-692	-40.71	779			1123	444	SLU 76	0.57	No
ini.	3	-1241	361.01	-3433			1320	517	SLU 74	0.15	No
fin.	3	-699	-42.13	786			1125	445	SLU 74	0.57	No
ini.	3	-1274	370.31	-3536			1332	521	SLU 77	0.15	No
fin.	3	-708	-43.99	812			1128	446	SLU 77	0.55	No
ini.	3	-1218	362.07	-3381			1312	514	SLU 82	0.15	No
fin.	3	-695	-42.85	757			1123	444	SLU 82	0.59	No
ini.	3	-1250	371.36	-3485			1323	518	SLU 84	0.15	No
fin.	3	-703	-44.71	783			1127	446	SLU 84	0.57	No
ini.	3	-1256	365.94	-3489			1326	519	SLU 80	0.15	No
fin.	3	-703	-42.74	803			1127	445	SLU 80	0.56	No
ini.	3	-1256	372.14	-3485			1325	519	SLU 83	0.15	No
fin.	3	-706	-44.97	780			1128	446	SLU 83	0.57	No
ini.	3	-1236	360.23	-3432			1318	517	SLU 75	0.15	No

Sezione	γM	N	M	V	Vt	Vp	Vt fess. diag.	Vt,lim	Comb.	c.s.	Verifica
fin.	3	-697	-41.87	789			1124	445	SLU 75	0.56	No
ini.	3	-1261	366.72	-3490			1328	520	SLU 79	0.15	No
fin.	3	-706	-43	799			1128	446	SLU 79	0.56	No

Verifiche a pressoflessione delle travi in muratura in combinazioni sismiche

Sezione	γM	N	M	Mu	Comb.	c.s.	Verifica
ini.	2	-1913	547.27	1726.01	SLV 10	3.15	Si
fin.	2	1400	-575.39	1726.01	SLV 10	3	Si
ini.	2	2838	-648.13	1726.01	SLV 3	2.66	Si
fin.	2	-3904	1337.28	1726.01	SLV 3	1.29	Si
ini.	2	2838	-648.13	1726.01	SLV 4	2.66	Si
fin.	2	-3904	1337.28	1726.01	SLV 4	1.29	Si
ini.	2	-4585	1135.38	1726.01	SLV 13	1.52	Si
fin.	2	2879	-1385.73	1726.01	SLV 13	1.25	Si
ini.	2	2887	-624.32	1726.01	SLV 1	2.76	Si
fin.	2	-3314	1243.19	1726.01	SLV 1	1.39	Si
ini.	2	-1913	547.27	1726.01	SLV 9	3.15	Si
fin.	2	1400	-575.39	1726.01	SLV 9	3	Si
ini.	2	-4633	1111.56	1726.01	SLV 15	1.55	Si
fin.	2	2290	-1291.64	1726.01	SLV 15	1.34	Si
ini.	2	-4585	1135.38	1726.01	SLV 14	1.52	Si
fin.	2	2879	-1385.73	1726.01	SLV 14	1.25	Si
ini.	2	-4633	1111.56	1726.01	SLV 16	1.55	Si
fin.	2	2290	-1291.64	1726.01	SLV 16	1.34	Si
ini.	2	2887	-624.32	1726.01	SLV 2	2.76	Si
fin.	2	-3314	1243.19	1726.01	SLV 2	1.39	Si

Verifiche a taglio delle travi in muratura secondo §C8.7.1.3.1 in combinazioni sismiche

Sezione	γM	N	M	V	Vt	Vp	Vt fess. diag.	Vt,lim	Comb.	c.s.	Verifica
ini.	2	2887	-624.32	3271			1310	0	SLV 2	0	No
fin.	2	-3314	1243.19	5565			2503	939	SLV 2	0.17	No
ini.	2	-4585	1135.38	-6908			2961	1062	SLV 13	0.15	No
fin.	2	2879	-1385.73	-5078			1310	0	SLV 13	0	No
ini.	2	-4585	1135.38	-6908			2961	1062	SLV 14	0.15	No
fin.	2	2879	-1385.73	-5078			1310	0	SLV 14	0	No
ini.	2	2887	-624.32	3271			1310	0	SLV 1	0	No
fin.	2	-3314	1243.19	5565			2503	939	SLV 1	0.17	No
ini.	2	2838	-648.13	2196			1310	0	SLV 3	0	No
fin.	2	-3904	1337.28	6194			2715	998	SLV 3	0.16	No
ini.	2	-4633	1111.56	-7983			2978	1066	SLV 16	0.13	No
fin.	2	2290	-1291.64	-4449			1310	0	SLV 16	0	No
ini.	2	-1913	547.27	-2091			1999	782	SLV 9	0.37	No
fin.	2	1400	-575.39	-2087			1310	0	SLV 9	0	No
ini.	2	-1913	547.27	-2091			1999	782	SLV 10	0.37	No
fin.	2	1400	-575.39	-2087			1310	0	SLV 10	0	No
ini.	2	-4633	1111.56	-7983			2978	1066	SLV 15	0.13	No
fin.	2	2290	-1291.64	-4449			1310	0	SLV 15	0	No
ini.	2	2838	-648.13	2196			1310	0	SLV 4	0	No
fin.	2	-3904	1337.28	6194			2715	998	SLV 4	0.16	No

Tabella dei coefficienti di sicurezza minimi

Stato limite	Coeff.s.	Comb.	Verifica
PF_SLV	1.246	SLV 13	Si
V_SLV	0	SLV 1	No
PF_SLU	3.092	SLU 83	Si
V_SLU	0.147	SLU 78	No

Trave di accoppiamento 91

Verifiche condotte secondo D.M. 17-01-18 (N.T.C.)

Dati geometrici

X ini.	Y ini.	Z ini.inf.	Z ini.sup.	H ini.	X fin.	Y fin.	Z fin.inf.	Z fin.sup	H fin.	Luce	Spessore	R. Trazione
-8.007	6.536	7.15	7.9	0.75	-7.007	6.536	7.15	7.9	0.75	1	0.28	30000

Caratteristiche del materiale

(Circolare 7 21-01-19 C8.5.I) Muratura in mattoni pieni e malta di calce LC2_Corti

fb_	fhk	fvk0	fhmedio	τ0	fv0	μ	ϕ	fvk,lim	E	G	FC
120000			172500	9000	20000	0.577	0.767	6500	320000000	128000000	1.2

Verifiche a pressoflessione delle travi in muratura in combinazioni non sismiche

Sezione	γM	N	M	Mu	Comb.	c.s.	Verifica
ini.	3	-116	-38.91	799.08	SLU 83	20.54	Si
fin.	3	-865	-345.85	799.08	SLU 83	2.31	Si
ini.	3	-115	-37.74	799.08	SLU 81	21.18	Si
fin.	3	-836	-336.47	799.08	SLU 81	2.37	Si
ini.	3	-99	-38.9	799.08	SLU 80	20.54	Si
fin.	3	-846	-338.98	799.08	SLU 80	2.36	Si
ini.	3	-92	-38.22	799.08	SLU 74	20.91	Si
fin.	3	-826	-334.37	799.08	SLU 74	2.39	Si
ini.	3	-112	-37.8	799.08	SLU 82	21.14	Si
fin.	3	-829	-335.62	799.08	SLU 82	2.38	Si
ini.	3	-89	-38.29	799.08	SLU 75	20.87	Si
fin.	3	-820	-333.53	799.08	SLU 75	2.4	Si
ini.	3	-90	-39.46	799.08	SLU 78	20.25	Si
fin.	3	-849	-342.91	799.08	SLU 78	2.33	Si
ini.	3	-113	-38.98	799.08	SLU 84	20.5	Si

Sezione	γM	N	M	Mu	Comb.	c.s.	Verifica
fin.	3	-858	-345	799.08	SLU 84	2.32	Si
ini.	3	-103	-38.83	799.08	SLU 79	20.58	Si
fin.	3	-853	-339.82	799.08	SLU 79	2.35	Si
ini.	3	-94	-39.4	799.08	SLU 77	20.28	Si
fin.	3	-855	-343.75	799.08	SLU 77	2.32	Si

Verifiche a taglio delle travi in muratura secondo §C8.7.1.3.1 in combinazioni non sismiche

Sezione	γM	N	M	V	Vt	Vp	Vt fess. diag.	Vt,lim	Comb.	c.s.	Verifica
ini.	3	-90	-39.46	2599			634	243	SLU 78	0.09	No
fin.	3	-849	-342.91	-2833			861	340	SLU 78	0.12	No
ini.	3	-103	-38.83	2569			637	244	SLU 79	0.1	No
fin.	3	-853	-339.82	-2805			862	340	SLU 79	0.12	No
ini.	3	-99	-38.9	2572			636	244	SLU 80	0.09	No
fin.	3	-846	-338.98	-2802			860	339	SLU 80	0.12	No
ini.	3	-89	-38.29	2543			633	242	SLU 75	0.1	No
fin.	3	-820	-333.53	-2763			852	336	SLU 75	0.12	No
ini.	3	-92	-38.22	2540			634	243	SLU 74	0.1	No
fin.	3	-826	-334.37	-2766			854	337	SLU 74	0.12	No
ini.	3	-113	-38.98	2653			640	246	SLU 84	0.09	No
fin.	3	-858	-345	-2866			864	341	SLU 84	0.12	No
ini.	3	-112	-37.8	2597			640	246	SLU 82	0.09	No
fin.	3	-829	-335.62	-2796			855	337	SLU 82	0.12	No
ini.	3	-116	-38.91	2650			641	247	SLU 83	0.09	No
fin.	3	-865	-345.85	-2868			866	341	SLU 83	0.12	No
ini.	3	-94	-39.4	2596			635	243	SLU 77	0.09	No
fin.	3	-855	-343.75	-2835			863	340	SLU 77	0.12	No
ini.	3	-115	-37.74	2594			641	246	SLU 81	0.09	No
fin.	3	-836	-336.47	-2798			857	338	SLU 81	0.12	No

Verifiche a pressoflessione delle travi in muratura in combinazioni sismiche

Sezione	γM	N	M	Mu	Comb.	c.s.	Verifica
ini.	2	2847	486.27	1198.62	SLV 14	2.46	Si
fin.	2	-3216	-1192.13	1198.62	SLV 14	1.01	Si
ini.	2	3681	585.55	1198.62	SLV 16	2.05	Si
fin.	2	-2335	-1116.36	1198.62	SLV 16	1.07	Si
ini.	2	-3789	-637.23	1198.62	SLV 2	1.88	Si
fin.	2	1244	672.64	1198.62	SLV 2	1.78	Si
ini.	2	2847	486.27	1198.62	SLV 13	2.46	Si
fin.	2	-3216	-1192.13	1198.62	SLV 13	1.01	Si
ini.	2	-450	-22.78	1198.62	SLV 9	52.61	Si
fin.	2	-2683	-627.86	1198.62	SLV 9	1.91	Si
ini.	2	-3789	-637.23	1198.62	SLV 1	1.88	Si
fin.	2	1244	672.64	1198.62	SLV 1	1.78	Si
ini.	2	-2955	-537.95	1198.62	SLV 4	2.23	Si
fin.	2	2125	748.42	1198.62	SLV 4	1.6	Si
ini.	2	-2955	-537.95	1198.62	SLV 3	2.23	Si
fin.	2	2125	748.42	1198.62	SLV 3	1.6	Si
ini.	2	-450	-22.78	1198.62	SLV 10	52.61	Si
fin.	2	-2683	-627.86	1198.62	SLV 10	1.91	Si
ini.	2	3681	585.55	1198.62	SLV 15	2.05	Si
fin.	2	-2335	-1116.36	1198.62	SLV 15	1.07	Si

Verifiche a taglio delle travi in muratura secondo §C8.7.1.3.1 in combinazioni sismiche

Sezione	γM	N	M	V	Vt	Vp	Vt fess. diag.	Vt,lim	Comb.	c.s.	Verifica
ini.	2	-2955	-537.95	5840			1796	669	SLV 4	0.11	No
fin.	2	2125	748.42	1778			910	0	SLV 4	0	No
ini.	2	342	-28.9	3818			910	281	SLV 7	0.07	No
fin.	2	1592	184.15	-1609			910	0	SLV 7	0	No
ini.	2	2333	308.15	1493			910	0	SLV 12	0	No
fin.	2	254	-375.29	-3946			910	298	SLV 12	0.08	No
ini.	2	-2955	-537.95	5840			1796	669	SLV 3	0.11	No
fin.	2	2125	748.42	1778			910	0	SLV 3	0	No
ini.	2	342	-28.9	3818			910	281	SLV 8	0.07	No
fin.	2	1592	184.15	-1609			910	0	SLV 8	0	No
ini.	2	2847	486.27	-2501			910	0	SLV 13	0	No
fin.	2	-3216	-1192.13	-5448			1875	690	SLV 13	0.13	No
ini.	2	2847	486.27	-2501			910	0	SLV 14	0	No
fin.	2	-3216	-1192.13	-5448			1875	690	SLV 14	0.13	No
ini.	2	-3789	-637.23	5249			2047	735	SLV 2	0.14	No
fin.	2	1244	672.64	2343			910	0	SLV 2	0	No
ini.	2	2333	308.15	1493			910	0	SLV 11	0	No
fin.	2	254	-375.29	-3946			910	298	SLV 11	0.08	No
ini.	2	-3789	-637.23	5249			2047	735	SLV 1	0.14	No
fin.	2	1244	672.64	2343			910	0	SLV 1	0	No

Tabella dei coefficienti di sicurezza minimi

Stato limite	Coeff.s.	Comb.	Verifica
PF_SLV	1.005	SLV 13	Si
V_SLV	0	SLV 1	No
PF_SLU	2.311	SLU 83	Si
V_SLU	0.093	SLU 84	No

Trave di accoppiamento 92

Verifiche condotte secondo D.M. 17-01-18 (N.T.C.)

Dati geometrici

X ini.	Y ini.	Z ini.inf.	Z ini.sup.	H ini.	X fin.	Y fin.	Z fin.inf.	Z fin.sup	H fin.	Luce	Spessore	R. Trazione
-8.05	-4.784	7.46	7.9	0.44	-9.89	-4.784	7.46	7.9	0.44	1.84	0.3	30000

Caratteristiche del materiale

(Circolare 7 21-01-19 C8.5.I) Muratura in mattoni pieni e malta di calce LC2_Corti

fb_	fhk	fvk0	fhmedio	τ0	fv0	μ	ϕ	fvk,lim	E	G	FC
120000			172500	9000	20000	0.577	0.767	6500	320000000	128000000	1.2

Verifiche a pressoflessione delle travi in muratura in combinazioni non sismiche

Sezione	γM	N	M	Mu	Comb.	c.s.	Verifica
ini.	3	-172	-31.13	294.67	SLU 82	9.47	Si
fin.	3	579	-282.74	294.67	SLU 82	1.04	Si
ini.	3	-190	-28.17	294.67	SLU 81	10.46	Si
fin.	3	567	-284.62	294.67	SLU 81	1.04	Si
ini.	3	-179	-29.49	294.67	SLU 84	9.99	Si
fin.	3	587	-286.11	294.67	SLU 84	1.03	Si
ini.	3	-199	-21.43	294.67	SLU 77	13.75	Si
fin.	3	544	-270.44	294.67	SLU 77	1.09	Si
ini.	3	-201	-20.67	294.67	SLU 79	14.26	Si
fin.	3	547	-272.42	294.67	SLU 79	1.08	Si
ini.	3	-163	-27.23	294.67	SLU 76	10.82	Si
fin.	3	560	-265.92	294.67	SLU 76	1.11	Si
ini.	3	-191	-23.07	294.67	SLU 74	12.78	Si
fin.	3	536	-267.07	294.67	SLU 74	1.1	Si
ini.	3	-180	-24.39	294.67	SLU 78	12.08	Si
fin.	3	556	-268.56	294.67	SLU 78	1.1	Si
ini.	3	-183	-23.62	294.67	SLU 80	12.47	Si
fin.	3	559	-270.54	294.67	SLU 80	1.09	Si
ini.	3	-198	-26.54	294.67	SLU 83	11.1	Si
fin.	3	575	-287.99	294.67	SLU 83	1.02	Si

Verifiche a taglio delle travi in muratura secondo §C8.7.1.3.1 in combinazioni non sismiche

Sezione	γM	N	M	V	Vt	Vp	Vt fess. diag.	Vt,lim	Comb.	c.s.	Verifica
ini.	3	-176	-22.27	271			386	151	SLU 60	0.56	No
fin.	3	495	-246.09	-246			339	0	SLU 60	0	No
ini.	3	-148	-21.33	234			378	147	SLU 55	0.63	No
fin.	3	488	-227.38	-204			339	0	SLU 55	0	No
ini.	3	-165	-23.59	264			383	150	SLU 63	0.57	No
fin.	3	515	-247.57	-240			339	0	SLU 63	0	No
ini.	3	-184	-15.53	234			388	152	SLU 56	0.65	No
fin.	3	472	-231.9	-199			339	0	SLU 56	0	No
ini.	3	-157	-25.23	269			381	149	SLU 61	0.55	No
fin.	3	507	-244.21	-245			339	0	SLU 61	0	No
ini.	3	-146	-29.16	285			378	147	SLU 42	0.52	No
fin.	3	519	-254.05	-295			339	0	SLU 42	0	No
ini.	3	-166	-18.49	232			383	150	SLU 57	0.64	No
fin.	3	484	-230.02	-198			339	0	SLU 57	0	No
ini.	3	-168	-17.73	230			384	150	SLU 59	0.65	No
fin.	3	487	-232	-200			339	0	SLU 59	0	No
ini.	3	-187	-14.77	232			389	152	SLU 58	0.66	No
fin.	3	475	-233.88	-201			339	0	SLU 58	0	No
ini.	3	-183	-20.64	266			388	152	SLU 62	0.57	No
fin.	3	503	-249.45	-241			339	0	SLU 62	0	No

Verifiche a pressoflessione delle travi in muratura in combinazioni sismiche

Sezione	γM	N	M	Mu	Comb.	c.s.	Verifica
ini.	2	1217	-345.57	442.01	SLV 13	1.28	Si
fin.	2	-377	518.38	442.01	SLV 13	0.85	No
ini.	2	-1488	320.88	442.01	SLV 3	1.38	Si
fin.	2	1084	-867.47	442.01	SLV 3	0.51	No
ini.	2	1393	-412.21	442.01	SLV 15	1.07	Si
fin.	2	-135	335.32	442.01	SLV 15	1.32	Si
ini.	2	-1488	320.88	442.01	SLV 4	1.38	Si
fin.	2	1084	-867.47	442.01	SLV 4	0.51	No
ini.	2	-274	-13.45	442.01	SLV 8	32.86	Si
fin.	2	939	-660.05	442.01	SLV 8	0.67	No
ini.	2	-274	-13.45	442.01	SLV 7	32.86	Si
fin.	2	939	-660.05	442.01	SLV 7	0.67	No
ini.	2	-1664	387.52	442.01	SLV 1	1.14	Si
fin.	2	842	-684.41	442.01	SLV 1	0.65	No
ini.	2	1217	-345.57	442.01	SLV 14	1.28	Si
fin.	2	-377	518.38	442.01	SLV 14	0.85	No
ini.	2	1393	-412.21	442.01	SLV 16	1.07	Si
fin.	2	-135	335.32	442.01	SLV 16	1.32	Si
ini.	2	-1664	387.52	442.01	SLV 2	1.14	Si
fin.	2	842	-684.41	442.01	SLV 2	0.65	No

Verifiche a taglio delle travi in muratura secondo §C8.7.1.3.1 in combinazioni sismiche

Sezione	γM	N	M	V	Vt	Vp	Vt fess. diag.	Vt,lim	Comb.	c.s.	Verifica
ini.	2	1393	-412.21	871			508	0	SLV 16	0	No
fin.	2	-135	335.32	-28			544	210	SLV 16	7.54	Si
ini.	2	-274	-13.45	-24			581	228	SLV 7	9.37	Si
fin.	2	939	-660.05	-626			508	0	SLV 7	0	No
ini.	2	1393	-412.21	871			508	0	SLV 15	0	No
fin.	2	-135	335.32	-28			544	210	SLV 15	7.54	Si
ini.	2	-1488	320.88	-507			905	345	SLV 3	0.68	No
fin.	2	1084	-867.47	-525			508	0	SLV 3	0	No
ini.	2	-274	-13.45	-24			581	228	SLV 8	9.37	Si
fin.	2	939	-660.05	-626			508	0	SLV 8	0	No

Sezione	γM	N	M	V	Vt	Vp	Vt fess. diag.	Vt,lim	Comb.	c.s.	Verifica
ini.	2	-1664	387.52	-508			952	359	SLV 2	0.71	No
fin.	2	842	-684.41	-290			508	0	SLV 2	0	No
ini.	2	1217	-345.57	871			508	0	SLV 13	0	No
fin.	2	-377	518.38	208			609	240	SLV 13	1.15	Si
ini.	2	1217	-345.57	871			508	0	SLV 14	0	No
fin.	2	-377	518.38	208			609	240	SLV 14	1.15	Si
ini.	2	-1664	387.52	-508			952	359	SLV 1	0.71	No
fin.	2	842	-684.41	-290			508	0	SLV 1	0	No
ini.	2	-1488	320.88	-507			905	345	SLV 4	0.68	No
fin.	2	1084	-867.47	-525			508	0	SLV 4	0	No

Tabella dei coefficienti di sicurezza minimi

Stato limite	Coeff.s.	Comb.	Verifica
PF_SLV	0.51	SLV 3	No
V_SLV	0	SLV 1	No
PF_SLU	1.023	SLU 83	Si
V_SLU	0	SLU 21	No

Trave di accoppiamento 93

Verifiche condotte secondo D.M. 17-01-18 (N.T.C.)

Dati geometrici

X ini.	Y ini.	Z ini.inf.	Z ini.sup.	H ini.	X fin.	Y fin.	Z fin.inf.	Z fin.sup	H fin.	Luce	Spessore	R. Trazione
-8.554	-3.248	6.45	7.9	1.45	-9.454	-3.248	6.45	7.9	1.45	0.9	0.28	30000

Caratteristiche del materiale

(Circolare 7 21-01-19 C8.5.I) Muratura in mattoni pieni e malta di calce LC2_Corti

fb_	fhk	fvk0	fhmedio	τ0	fv0	μ	ϕ	fvk,lim	E	G	FC
120000			172500	9000	20000	0.577	0.767	6500	320000000	128000000	1.2

Verifiche a pressoflessione delle travi in muratura in combinazioni non sismiche

Sezione	γM	N	M	Mu	Comb.	c.s.	Verifica
ini.	3	-71	-284.91	2986.79	SLU 84	10.48	Si
fin.	3	-71	-508.27	2986.79	SLU 84	5.88	Si
ini.	3	-106	-274.88	2986.79	SLU 82	10.87	Si
fin.	3	-106	-492.33	2986.79	SLU 82	6.07	Si
ini.	3	33	-288.37	2986.79	SLU 83	10.36	Si
fin.	3	33	-489.41	2986.79	SLU 83	6.1	Si
ini.	3	-8	-199.07	2986.79	SLU 36	15	Si
fin.	3	-8	-492.81	2986.79	SLU 36	6.06	Si
ini.	3	-104	-162.44	2986.79	SLU 40	18.39	Si
fin.	3	-104	-481.51	2986.79	SLU 40	6.2	Si
ini.	3	95	-314.98	2986.79	SLU 77	9.48	Si
fin.	3	95	-484.77	2986.79	SLU 77	6.16	Si
ini.	3	-23	-316.48	2986.79	SLU 80	9.44	Si
fin.	3	-23	-482.4	2986.79	SLU 80	6.19	Si
ini.	3	-44	-301.49	2986.79	SLU 75	9.91	Si
fin.	3	-44	-487.68	2986.79	SLU 75	6.12	Si
ini.	3	-9	-311.52	2986.79	SLU 78	9.59	Si
fin.	3	-9	-503.63	2986.79	SLU 78	5.93	Si
ini.	3	-69	-172.47	2986.79	SLU 42	17.32	Si
fin.	3	-69	-497.45	2986.79	SLU 42	6	Si

Verifiche a taglio delle travi in muratura secondo §C8.7.1.3.1 in combinazioni non sismiche

Sezione	γM	N	M	V	Vt	Vp	Vt fess. diag.	Vt,lim	Comb.	c.s.	Verifica
ini.	3	-71	-284.91	843			1592	604	SLU 84	0.72	No
fin.	3	-71	-508.27	-1380			1592	604	SLU 84	0.44	No
ini.	3	-2	-278.34	874			1564	589	SLU 81	0.67	No
fin.	3	-2	-473.47	-1349			1564	589	SLU 81	0.44	No
ini.	3	-69	-172.47	613			1591	603	SLU 42	0.98	No
fin.	3	-69	-497.45	-1366			1591	603	SLU 42	0.44	No
ini.	3	-106	-274.88	849			1606	611	SLU 82	0.72	No
fin.	3	-106	-492.33	-1374			1606	611	SLU 82	0.44	No
ini.	3	95	-314.98	824			1564	567	SLU 77	0.69	No
fin.	3	95	-484.77	-1242			1564	567	SLU 77	0.46	No
ini.	3	96	-202.53	593			1564	567	SLU 35	0.96	No
fin.	3	96	-473.95	-1228			1564	567	SLU 35	0.46	No
ini.	3	-1	-165.9	644			1564	589	SLU 39	0.91	No
fin.	3	-1	-462.65	-1335			1564	589	SLU 39	0.44	No
ini.	3	-104	-162.44	619			1605	611	SLU 40	0.99	No
fin.	3	-104	-481.51	-1360			1605	611	SLU 40	0.45	No
ini.	3	34	-175.92	637			1564	581	SLU 41	0.91	No
fin.	3	34	-478.59	-1342			1564	581	SLU 41	0.43	No
ini.	3	33	-288.37	868			1564	581	SLU 83	0.67	No
fin.	3	33	-489.41	-1355			1564	581	SLU 83	0.43	No

Verifiche a pressoflessione delle travi in muratura in combinazioni sismiche

Sezione	γM	N	M	Mu	Comb.	c.s.	Verifica
ini.	2	501	3624.16	4480.18	SLV 1	1.24	Si
fin.	2	425	-5334.04	4480.18	SLV 1	0.84	No
ini.	2	1210	1500.16	4480.18	SLV 8	2.99	Si
fin.	2	1542	-2043.14	4480.18	SLV 8	2.19	Si
ini.	2	1077	3955.12	4480.18	SLV 4	1.13	Si
fin.	2	1196	-5479.45	4480.18	SLV 4	0.82	No
ini.	2	501	3624.16	4480.18	SLV 2	1.24	Si
fin.	2	425	-5334.04	4480.18	SLV 2	0.84	No

Sezione	γM	N	M	Mu	Comb.	c.s.	Verifica
ini.	2	1077	3955.12	4480.18	SLV 3	1.13	Si
fin.	2	1196	-5479.45	4480.18	SLV 3	0.82	No
ini.	2	-1040	-4493.21	4480.18	SLV 14	1	No
fin.	2	-1160	4968.64	4480.18	SLV 14	0.9	No
ini.	2	-464	-4162.24	4480.18	SLV 16	1.08	Si
fin.	2	-389	4823.24	4480.18	SLV 16	0.93	No
ini.	2	-1040	-4493.21	4480.18	SLV 13	1	No
fin.	2	-1160	4968.64	4480.18	SLV 13	0.9	No
ini.	2	-464	-4162.24	4480.18	SLV 15	1.08	Si
fin.	2	-389	4823.24	4480.18	SLV 15	0.93	No
ini.	2	1210	1500.16	4480.18	SLV 7	2.99	Si
fin.	2	1542	-2043.14	4480.18	SLV 7	2.19	Si

Verifiche a taglio delle travi in muratura secondo §C8.7.1.3.1 in combinazioni sismiche

Sezione	γM	N	M	V	Vt	Vp	Vt fess. diag.	Vt,lim	Comb.	c.s.	Verifica
ini.	2	1210	1500.16	-3474			2345	561	SLV 7	0.16	No
fin.	2	1542	-2043.14	-4444			2345	433	SLV 7	0.1	No
ini.	2	1077	3955.12	-10030			2345	605	SLV 3	0.06	No
fin.	2	1196	-5479.45	-11273			2345	566	SLV 3	0.05	No
ini.	2	-464	-4162.24	10757			2531	978	SLV 15	0.09	No
fin.	2	-389	4823.24	9537			2501	963	SLV 15	0.1	No
ini.	2	1077	3955.12	-10030			2345	605	SLV 4	0.06	No
fin.	2	1196	-5479.45	-11273			2345	566	SLV 4	0.05	No
ini.	2	-464	-4162.24	10757			2531	978	SLV 16	0.09	No
fin.	2	-389	4823.24	9537			2501	963	SLV 16	0.1	No
ini.	2	1210	1500.16	-3474			2345	561	SLV 8	0.16	No
fin.	2	1542	-2043.14	-4444			2345	433	SLV 8	0.1	No
ini.	2	-1040	-4493.21	11374			2761	1085	SLV 14	0.1	No
fin.	2	-1160	4968.64	9926			2809	1106	SLV 14	0.11	No
ini.	2	501	3624.16	-9413			2345	766	SLV 1	0.08	No
fin.	2	425	-5334.04	-10883			2345	785	SLV 1	0.07	No
ini.	2	501	3624.16	-9413			2345	766	SLV 2	0.08	No
fin.	2	425	-5334.04	-10883			2345	785	SLV 2	0.07	No
ini.	2	-1040	-4493.21	11374			2761	1085	SLV 13	0.1	No
fin.	2	-1160	4968.64	9926			2809	1106	SLV 13	0.11	No

Tabella dei coefficienti di sicurezza minimi

Stato limite	Coeff.s.	Comb.	Verifica
PF_SLV	0.818	SLV 3	No
V_SLV	0.05	SLV 3	No
PF_SLU	5.876	SLU 84	Si
V_SLU	0.429	SLU 83	No

Trave di accoppiamento 94

Verifiche condotte secondo D.M. 17-01-18 (N.T.C.)

Dati geometrici

X ini.	Y ini.	Z ini.inf.	Z ini.sup.	H ini.	X fin.	Y fin.	Z fin.inf.	Z fin.sup	H fin.	Luce	Spessore	R. Trazione
-7.723	-4.589	7.46	7.9	0.44	-7.723	-3.499	7.46	7.9	0.44	1.09	0.3	30000

Caratteristiche del materiale

(Circolare 7 21-01-19 C8.5.I) Muratura in mattoni pieni e malta di calce LC2_Corti

fb_	fhk	fvk0	fhmedio	τ0	fv0	μ	ϕ	fvk,lim	E	G	FC
120000			172500	9000	20000	0.577	0.767	6500	320000000	128000000	1.2

Verifiche a pressoflessione delle travi in muratura in combinazioni non sismiche

Sezione	γM	N	M	Mu	Comb.	c.s.	Verifica
ini.	3	47	-23.92	294.67	SLU 65	12.32	Si
fin.	3	109	-29.02	294.67	SLU 65	10.15	Si
ini.	3	49	-22.18	294.67	SLU 2	13.29	Si
fin.	3	118	-27.11	294.67	SLU 2	10.87	Si
ini.	3	50	-22.81	294.67	SLU 5	12.92	Si
fin.	3	117	-26.47	294.67	SLU 5	11.13	Si
ini.	3	48	-25.13	294.67	SLU 76	11.72	Si
fin.	3	101	-26.84	294.67	SLU 76	10.98	Si
ini.	3	45	-22.54	294.67	SLU 44	13.08	Si
fin.	3	116	-31.33	294.67	SLU 44	9.41	Si
ini.	3	46	-23.17	294.67	SLU 47	12.72	Si
fin.	3	114	-30.69	294.67	SLU 47	9.6	Si
ini.	3	44	-23.12	294.67	SLU 52	12.75	Si
fin.	3	110	-29.79	294.67	SLU 52	9.89	Si
ini.	3	46	-23.75	294.67	SLU 55	12.41	Si
fin.	3	108	-29.15	294.67	SLU 55	10.11	Si
ini.	3	49	-24.55	294.67	SLU 68	12	Si
fin.	3	107	-28.38	294.67	SLU 68	10.38	Si
ini.	3	47	-24.5	294.67	SLU 73	12.03	Si
fin.	3	103	-27.48	294.67	SLU 73	10.72	Si

Verifiche a taglio delle travi in muratura secondo §C8.7.1.3.1 in combinazioni non sismiche

Sezione	γM	N	M	V	Vt	Vp	Vt fess. diag.	Vt,lim	Comb.	c.s.	Verifica
ini.	3	26	-18.01	-533			339	124	SLU 80	0.23	No
fin.	3	45	-19.92	-112			339	121	SLU 80	1.08	Si
ini.	3	-11	-5.35	-577			342	129	SLU 81	0.22	No
fin.	3	-35	-11.12	-114			348	133	SLU 81	1.16	Si
ini.	3	-11	-4.98	-550			342	129	SLU 58	0.23	No
fin.	3	-29	-12.81	-117			347	132	SLU 58	1.13	Si

Sezione	γM	N	M	V	Vt	Vp	Vt fess. diag.	Vt,lim	Comb.	c.s.	Verifica
ini.	3	28	-18.44	-531			339	123	SLU 78	0.23	No
fin.	3	41	-17.87	-109			339	122	SLU 78	1.11	Si
ini.	3	-10	-5.98	-594			342	129	SLU 83	0.22	No
fin.	3	-37	-10.48	-112			349	133	SLU 83	1.19	Si
ini.	3	-8	-6.37	-591			341	129	SLU 79	0.22	No
fin.	3	-36	-10.5	-111			349	133	SLU 79	1.2	Si
ini.	3	-8	-6.16	-572			341	129	SLU 74	0.22	No
fin.	3	-39	-9.09	-110			349	133	SLU 74	1.2	Si
ini.	3	25	-17.62	-536			339	124	SLU 84	0.23	No
fin.	3	44	-19.9	-113			339	121	SLU 84	1.07	Si
ini.	3	-12	-4.6	-553			342	129	SLU 62	0.23	No
fin.	3	-30	-12.79	-118			347	132	SLU 62	1.12	Si
ini.	3	-7	-6.8	-589			341	129	SLU 77	0.22	No
fin.	3	-41	-8.45	-108			350	133	SLU 77	1.24	Si

Verifiche a pressoflessione delle travi in muratura in combinazioni sismiche

Sezione	γM	N	M	Mu	Comb.	c.s.	Verifica
ini.	2	74	-27.77	442.01	SLV 9	15.92	Si
fin.	2	-542	317.12	442.01	SLV 9	1.39	Si
ini.	2	638	-169.52	442.01	SLV 6	2.61	Si
fin.	2	-1090	425.52	442.01	SLV 6	1.04	Si
ini.	2	74	-27.77	442.01	SLV 10	15.92	Si
fin.	2	-542	317.12	442.01	SLV 10	1.39	Si
ini.	2	638	-169.52	442.01	SLV 5	2.61	Si
fin.	2	-1090	425.52	442.01	SLV 5	1.04	Si
ini.	2	-90	21.1	442.01	SLV 7	20.95	Si
fin.	2	500	-337.75	442.01	SLV 7	1.31	Si
ini.	2	-655	162.85	442.01	SLV 11	2.71	Si
fin.	2	1049	-446.15	442.01	SLV 11	0.99	No
ini.	2	-655	162.85	442.01	SLV 12	2.71	Si
fin.	2	1049	-446.15	442.01	SLV 12	0.99	No
ini.	2	-1058	261.5	442.01	SLV 15	1.69	Si
fin.	2	1132	-305.48	442.01	SLV 15	1.45	Si
ini.	2	-1058	261.5	442.01	SLV 16	1.69	Si
fin.	2	1132	-305.48	442.01	SLV 16	1.45	Si
ini.	2	-90	21.1	442.01	SLV 8	20.95	Si
fin.	2	500	-337.75	442.01	SLV 8	1.31	Si

Verifiche a taglio delle travi in muratura secondo §C8.7.1.3.1 in combinazioni sismiche

Sezione	γM	N	M	V	Vt	Vp	Vt fess. diag.	Vt,lim	Comb.	c.s.	Verifica
ini.	2	-840	204.32	-388			732	288	SLV 13	0.74	No
fin.	2	655	-76.5	-544			508	16	SLV 13	0.03	No
ini.	2	-655	162.85	-619			683	270	SLV 12	0.44	No
fin.	2	1049	-446.15	-1291			508	0	SLV 12	0	No
ini.	2	-1058	261.5	-512			791	309	SLV 16	0.6	No
fin.	2	1132	-305.48	-1129			508	0	SLV 16	0	No
ini.	2	1041	-268.18	-284			508	0	SLV 2	0	No
fin.	2	-1174	284.85	945			821	319	SLV 2	0.34	No
ini.	2	-1058	261.5	-512			791	309	SLV 15	0.6	No
fin.	2	1132	-305.48	-1129			508	0	SLV 15	0	No
ini.	2	823	-210.99	-407			508	0	SLV 4	0	No
fin.	2	-697	55.87	360			694	274	SLV 4	0.76	No
ini.	2	-840	204.32	-388			732	288	SLV 14	0.74	No
fin.	2	655	-76.5	-544			508	16	SLV 14	0.03	No
ini.	2	1041	-268.18	-284			508	0	SLV 1	0	No
fin.	2	-1174	284.85	945			821	319	SLV 1	0.34	No
ini.	2	823	-210.99	-407			508	0	SLV 3	0	No
fin.	2	-697	55.87	360			694	274	SLV 3	0.76	No
ini.	2	-655	162.85	-619			683	270	SLV 11	0.44	No
fin.	2	1049	-446.15	-1291			508	0	SLV 11	0	No

Tabella dei coefficienti di sicurezza minimi

Stato limite	Coeff.s.	Comb.	Verifica
PF_SLV	0.991	SLV 11	No
V_SLV	0	SLV 1	No
PF_SLU	9.406	SLU 44	Si
V_SLU	0.217	SLU 83	No

Trave di accoppiamento 95

Verifiche condotte secondo D.M. 17-01-18 (N.T.C.)

Dati geometrici

X ini.	Y ini.	Z ini.inf.	Z ini.sup.	H ini.	X fin.	Y fin.	Z fin.inf.	Z fin.sup	H fin.	Luce	Spessore	R. Trazione
-5.158	1.365	6.45	7.9	1.45	-5.158	2.165	6.45	7.9	1.45	0.8	0.14	30000

Caratteristiche del materiale

(Circolare 7 21-01-19 C8.5.I) Muratura in mattoni pieni e malta di calce LC2_Corti

fb_	fhk	fvk0	fhmedio	τ0	fv0	μ	ϕ	fvk,lim	E	G	FC
120000			172500	9000	20000	0.577	0.767	6500	320000000	128000000	1.2

Verifiche a pressoflessione delle travi in muratura in combinazioni non sismiche

Sezione	γM	N	M	Mu	Comb.	c.s.	Verifica
ini.	3	57	64.35	1493.39	SLU 39	23.21	Si
fin.	3	-283	-642.61	1493.39	SLU 39	2.32	Si
ini.	3	59	87.38	1493.39	SLU 83	17.09	Si
fin.	3	-288	-677.72	1493.39	SLU 83	2.2	Si

Sezione	γM	N	M	Mu	Comb.	c.s.	Verifica
ini.	3	52	93.07	1493.39	SLU 77	16.05	Si
fin.	3	-261	-617.72	1493.39	SLU 77	2.42	Si
ini.	3	36	60.29	1493.39	SLU 42	24.77	Si
fin.	3	-315	-664.13	1493.39	SLU 42	2.25	Si
ini.	3	58	85.04	1493.39	SLU 81	17.56	Si
fin.	3	-277	-657.9	1493.39	SLU 81	2.27	Si
ini.	3	34	57.95	1493.39	SLU 40	25.77	Si
fin.	3	-303	-644.3	1493.39	SLU 40	2.32	Si
ini.	3	36	78.64	1493.39	SLU 82	18.99	Si
fin.	3	-297	-659.59	1493.39	SLU 82	2.26	Si
ini.	3	30	86.67	1493.39	SLU 78	17.23	Si
fin.	3	-281	-619.41	1493.39	SLU 78	2.41	Si
ini.	3	37	80.98	1493.39	SLU 84	18.44	Si
fin.	3	-308	-679.42	1493.39	SLU 84	2.2	Si
ini.	3	58	66.69	1493.39	SLU 41	22.39	Si
fin.	3	-294	-662.43	1493.39	SLU 41	2.25	Si

Verifiche a taglio delle travi in muratura secondo §C8.7.1.3.1 in combinazioni non sismiche

Sezione	γM	N	M	V	Vt	Vp	Vt fess. diag.	Vt,lim	Comb.	c.s.	Verifica
ini.	3	36	78.64	602			782	286	SLU 82	0.48	No
fin.	3	-297	-659.59	-2203			901	353	SLU 82	0.16	No
ini.	3	59	87.38	623			782	281	SLU 83	0.45	No
fin.	3	-288	-677.72	-2276			897	351	SLU 83	0.15	No
ini.	3	58	85.04	602			782	281	SLU 81	0.47	No
fin.	3	-277	-657.9	-2211			893	349	SLU 81	0.16	No
ini.	3	37	80.98	623			782	286	SLU 84	0.46	No
fin.	3	-308	-679.42	-2268			905	355	SLU 84	0.16	No
ini.	3	52	93.07	723			782	283	SLU 77	0.39	No
fin.	3	-261	-617.72	-2214			886	346	SLU 77	0.16	No
ini.	3	30	86.67	723			782	288	SLU 78	0.4	No
fin.	3	-281	-619.41	-2206			894	350	SLU 78	0.16	No
ini.	3	28	84.34	702			782	288	SLU 75	0.41	No
fin.	3	-270	-599.58	-2142			890	348	SLU 75	0.16	No
ini.	3	30	85.49	706			782	288	SLU 80	0.41	No
fin.	3	-274	-611.56	-2179			891	349	SLU 80	0.16	No
ini.	3	52	91.89	706			782	283	SLU 79	0.4	No
fin.	3	-254	-609.86	-2187			883	345	SLU 79	0.16	No
ini.	3	51	90.74	702			782	283	SLU 74	0.4	No
fin.	3	-250	-597.89	-2150			882	344	SLU 74	0.16	No

Verifiche a pressoflessione delle travi in muratura in combinazioni sismiche

Sezione	γM	N	M	Mu	Comb.	c.s.	Verifica
ini.	2	151	161.03	2240.09	SLV 6	13.91	Si
fin.	2	3678	4796.22	2240.09	SLV 6	0.47	No
ini.	2	-70	132.87	2240.09	SLV 9	16.86	Si
fin.	2	3046	4049.96	2240.09	SLV 9	0.55	No
ini.	2	-98	-22.5	2240.09	SLV 11	99.54	Si
fin.	2	-3901	-5414.19	2240.09	SLV 11	0.41	No
ini.	2	-98	-22.5	2240.09	SLV 12	99.54	Si
fin.	2	-3901	-5414.19	2240.09	SLV 12	0.41	No
ini.	2	-345	-0.98	2240.09	SLV 16	2292.39	Si
fin.	2	-2207	-2972.37	2240.09	SLV 16	0.75	No
ini.	2	122	5.66	2240.09	SLV 7	396.09	Si
fin.	2	-3268	-4667.94	2240.09	SLV 7	0.48	No
ini.	2	-70	132.87	2240.09	SLV 10	16.86	Si
fin.	2	3046	4049.96	2240.09	SLV 10	0.55	No
ini.	2	-345	-0.98	2240.09	SLV 15	2292.39	Si
fin.	2	-2207	-2972.37	2240.09	SLV 15	0.75	No
ini.	2	151	161.03	2240.09	SLV 5	13.91	Si
fin.	2	3678	4796.22	2240.09	SLV 5	0.47	No
ini.	2	122	5.66	2240.09	SLV 8	396.09	Si
fin.	2	-3268	-4667.94	2240.09	SLV 8	0.48	No

Verifiche a taglio delle travi in muratura secondo §C8.7.1.3.1 in combinazioni sismiche

Sezione	γM	N	M	V	Vt	Vp	Vt fess. diag.	Vt,lim	Comb.	c.s.	Verifica
ini.	2	-98	-22.5	-5574			1212	462	SLV 12	0.08	No
fin.	2	-3901	-5414.19	-8637			2733	971	SLV 12	0.11	No
ini.	2	122	5.66	-5558			1173	414	SLV 7	0.07	No
fin.	2	-3268	-4667.94	-7360			2480	907	SLV 7	0.12	No
ini.	2	-98	-22.5	-5574			1212	462	SLV 11	0.08	No
fin.	2	-3901	-5414.19	-8637			2733	971	SLV 11	0.11	No
ini.	2	-70	132.87	6736			1201	456	SLV 9	0.07	No
fin.	2	3046	4049.96	4672			1173	0	SLV 9	0	No
ini.	2	122	5.66	-5558			1173	414	SLV 8	0.07	No
fin.	2	-3268	-4667.94	-7360			2480	907	SLV 8	0.12	No
ini.	2	-70	132.87	6736			1201	456	SLV 10	0.07	No
fin.	2	3046	4049.96	4672			1173	0	SLV 10	0	No
ini.	2	151	161.03	6752			1173	407	SLV 6	0.06	No
fin.	2	3678	4796.22	5949			1173	0	SLV 6	0	No
ini.	2	397	139.5	2462			1173	344	SLV 2	0.14	No
fin.	2	1985	2354.4	2782			1173	0	SLV 2	0	No
ini.	2	397	139.5	2462			1173	344	SLV 1	0.14	No
fin.	2	1985	2354.4	2782			1173	0	SLV 1	0	No
ini.	2	151	161.03	6752			1173	407	SLV 5	0.06	No
fin.	2	3678	4796.22	5949			1173	0	SLV 5	0	No

Tabella dei coefficienti di sicurezza minimi

Stato limite	Coeff.s.	Comb.	Verifica
PF_SLV	0.414	SLV 11	No
V_SLV	0	SLV 1	No

Stato limite	Coeff.s.	Comb.	Verifica
PF_SLU	2.198	SLU 84	Si
V_SLU	0.154	SLU 83	No

Trave di accoppiamento 96

Verifiche condotte secondo D.M. 17-01-18 (N.T.C.)

Dati geometrici

X ini.	Y ini.	Z ini.inf.	Z ini.sup.	H ini.	X fin.	Y fin.	Z fin.inf.	Z fin.sup	H fin.	Luce	Spessore	R. Trazione
-6.464	-3.248	4.35	5.25	0.9	-7.464	-3.248	4.35	5.25	0.9	1	0.28	30000

Caratteristiche del materiale

(Circolare 7 21-01-19 C8.5.I) Muratura in mattoni pieni e malta di calce LC2_Corti

fb_	fhk	fvk0	fhmedio	τ0	fv0	μ	ϕ	fvk,lim	E	G	FC
120000			172500	9000	20000	0.577	0.767	6500	320000000	128000000	1.2

Verifiche a pressoflessione delle travi in muratura in combinazioni non sismiche

Sezione	γM	N	M	Mu	Comb.	c.s.	Verifica
ini.	3	2028	-146.17	1150.68	SLU 83	7.87	Si
fin.	3	-623	471.9	1150.68	SLU 83	2.44	Si
ini.	3	1721	-154.98	1150.68	SLU 76	7.42	Si
fin.	3	-802	486.82	1150.68	SLU 76	2.36	Si
ini.	3	1916	-159.62	1150.68	SLU 84	7.21	Si
fin.	3	-744	494.22	1150.68	SLU 84	2.33	Si
ini.	3	1820	-146.51	1150.68	SLU 80	7.85	Si
fin.	3	-722	477.07	1150.68	SLU 80	2.41	Si
ini.	3	1830	-144.11	1150.68	SLU 78	7.98	Si
fin.	3	-713	474.92	1150.68	SLU 78	2.42	Si
ini.	3	1806	-143.61	1150.68	SLU 75	8.01	Si
fin.	3	-712	469.78	1150.68	SLU 75	2.45	Si
ini.	3	1688	-144.2	1150.68	SLU 63	7.98	Si
fin.	3	-733	465.33	1150.68	SLU 63	2.47	Si
ini.	3	1697	-154.48	1150.68	SLU 73	7.45	Si
fin.	3	-800	481.68	1150.68	SLU 73	2.39	Si
ini.	3	2003	-145.68	1150.68	SLU 81	7.9	Si
fin.	3	-621	466.76	1150.68	SLU 81	2.47	Si
ini.	3	1892	-159.12	1150.68	SLU 82	7.23	Si
fin.	3	-743	489.08	1150.68	SLU 82	2.35	Si

Verifiche a taglio delle travi in muratura secondo §C8.7.1.3.1 in combinazioni non sismiche

Sezione	γM	N	M	V	Vt	Vp	Vt fess. diag.	Vt,lim	Comb.	c.s.	Verifica
ini.	3	1577	-128.19	-1079			873	0	SLU 54	0	No
fin.	3	-700	440.89	3234			1126	445	SLU 54	0.14	No
ini.	3	1592	-131.09	-1084			873	0	SLU 59	0	No
fin.	3	-711	448.19	3277			1129	447	SLU 59	0.14	No
ini.	3	1118	-69.36	-887			873	0	SLU 1	0	No
fin.	3	-412	287.31	2210			1022	401	SLU 1	0.18	No
ini.	3	1663	-143.7	-992			873	0	SLU 61	0	No
fin.	3	-731	460.19	3312			1137	450	SLU 61	0.14	No
ini.	3	1689	-114.74	-1169			873	0	SLU 53	0	No
fin.	3	-579	418.57	3199			1082	427	SLU 53	0.13	No
ini.	3	1775	-130.25	-1083			873	0	SLU 60	0	No
fin.	3	-610	437.87	3277			1093	432	SLU 60	0.13	No
ini.	3	1704	-117.64	-1175			873	0	SLU 58	0	No
fin.	3	-589	425.86	3242			1086	429	SLU 58	0.13	No
ini.	3	1602	-128.69	-1116			873	0	SLU 57	0	No
fin.	3	-702	446.03	3291			1126	445	SLU 57	0.14	No
ini.	3	1713	-115.24	-1207			873	0	SLU 56	0	No
fin.	3	-580	423.71	3256			1082	427	SLU 56	0.13	No
ini.	3	1493	-139.55	-986			873	0	SLU 55	0	No
fin.	3	-791	457.93	3243			1158	458	SLU 55	0.14	No

Verifiche a pressoflessione delle travi in muratura in combinazioni sismiche

Sezione	γM	N	M	Mu	Comb.	c.s.	Verifica
ini.	2	-2761	1383.37	1726.01	SLV 2	1.25	Si
fin.	2	2626	-1841.21	1726.01	SLV 2	0.94	No
ini.	2	5288	-1549.05	1726.01	SLV 15	1.11	Si
fin.	2	-3487	2462.05	1726.01	SLV 15	0.7	No
ini.	2	4524	-959.25	1726.01	SLV 12	1.8	Si
fin.	2	-1388	1398.27	1726.01	SLV 12	1.23	Si
ini.	2	-1407	1095.54	1726.01	SLV 3	1.58	Si
fin.	2	2599	-1549.54	1726.01	SLV 3	1.11	Si
ini.	2	-1407	1095.54	1726.01	SLV 4	1.58	Si
fin.	2	2599	-1549.54	1726.01	SLV 4	1.11	Si
ini.	2	5288	-1549.05	1726.01	SLV 16	1.11	Si
fin.	2	-3487	2462.05	1726.01	SLV 16	0.7	No
ini.	2	-2761	1383.37	1726.01	SLV 1	1.25	Si
fin.	2	2626	-1841.21	1726.01	SLV 1	0.94	No
ini.	2	4524	-959.25	1726.01	SLV 11	1.8	Si
fin.	2	-1388	1398.27	1726.01	SLV 11	1.23	Si
ini.	2	3934	-1261.22	1726.01	SLV 14	1.37	Si
fin.	2	-3460	2170.38	1726.01	SLV 14	0.8	No
ini.	2	3934	-1261.22	1726.01	SLV 13	1.37	Si
fin.	2	-3460	2170.38	1726.01	SLV 13	0.8	No

Verifiche a taglio delle travi in muratura secondo §C8.7.1.3.1 in combinazioni sismiche

Sezione	γM	N	M	V	Vt	Vp	Vt fess. diag.	Vt,lim	Comb.	c.s.	Verifica
ini.	2	-1407	1095.54	-5835			1817	717	SLV 4	0.12	No
fin.	2	2599	-1549.54	-3933			1310	0	SLV 4	0	No
ini.	2	4524	-959.25	3266			1310	0	SLV 11	0	No
fin.	2	-1388	1398.27	6665			1810	715	SLV 11	0.11	No
ini.	2	4524	-959.25	3266			1310	0	SLV 12	0	No
fin.	2	-1388	1398.27	6665			1810	715	SLV 12	0.11	No
ini.	2	2516	-165.87	-143			1310	0	SLV 8	0	No
fin.	2	437	194.8	2480			1310	398	SLV 8	0.16	No
ini.	2	3934	-1261.22	4060			1310	0	SLV 13	0	No
fin.	2	-3460	2170.38	8701			2556	954	SLV 13	0.11	No
ini.	2	-2761	1383.37	-7304			2304	881	SLV 1	0.12	No
fin.	2	2626	-1841.21	-5247			1310	0	SLV 1	0	No
ini.	2	-2761	1383.37	-7304			2304	881	SLV 2	0.12	No
fin.	2	2626	-1841.21	-5247			1310	0	SLV 2	0	No
ini.	2	3934	-1261.22	4060			1310	0	SLV 14	0	No
fin.	2	-3460	2170.38	8701			2556	954	SLV 14	0.11	No
ini.	2	2516	-165.87	-143			1310	0	SLV 7	0	No
fin.	2	437	194.8	2480			1310	398	SLV 7	0.16	No
ini.	2	-1407	1095.54	-5835			1817	717	SLV 3	0.12	No
fin.	2	2599	-1549.54	-3933			1310	0	SLV 3	0	No

Tabella dei coefficienti di sicurezza minimi

Stato limite	Coeff.s.	Comb.	Verifica
PF_SLV	0.701	SLV 15	No
V_SLV	0	SLV 1	No
PF_SLU	2.328	SLU 84	Si
V_SLU	0	SLU 1	No

Trave di accoppiamento 97

Verifiche condotte secondo D.M. 17-01-18 (N.T.C.)

Dati geometrici

X ini.	Y ini.	Z ini.inf.	Z ini.sup.	H ini.	X fin.	Y fin.	Z fin.inf.	Z fin.sup	H fin.	Luce	Spessore	R. Trazione
-6.464	-3.248	7.15	7.9	0.75	-7.464	-3.248	7.15	7.9	0.75	1	0.28	30000

Caratteristiche del materiale

(Circolare 7 21-01-19 C8.5.I) Muratura in mattoni pieni e malta di calce LC2_Corti

fb_	fhk	fvk0	fhmedio	τ0	fv0	μ	ϕ	fvk,lim	E	G	FC
120000			172500	9000	20000	0.577	0.767	6500	320000000	128000000	1.2

Verifiche a pressoflessione delle travi in muratura in combinazioni non sismiche

Sezione	γM	N	M	Mu	Comb.	c.s.	Verifica
ini.	3	-159	-362.62	799.08	SLU 82	2.2	Si
fin.	3	893	99.19	799.08	SLU 82	8.06	Si
ini.	3	-150	-358.01	799.08	SLU 76	2.23	Si
fin.	3	877	101.38	799.08	SLU 76	7.88	Si
ini.	3	-92	-358.7	799.08	SLU 78	2.23	Si
fin.	3	932	94.66	799.08	SLU 78	8.44	Si
ini.	3	-156	-351.19	799.08	SLU 73	2.28	Si
fin.	3	843	98.63	799.08	SLU 73	8.1	Si
ini.	3	-153	-369.44	799.08	SLU 84	2.16	Si
fin.	3	927	101.95	799.08	SLU 84	7.84	Si
ini.	3	-99	-351.88	799.08	SLU 75	2.27	Si
fin.	3	899	91.9	799.08	SLU 75	8.69	Si
ini.	3	-111	-351.7	799.08	SLU 81	2.27	Si
fin.	3	914	86.48	799.08	SLU 81	9.24	Si
ini.	3	-111	-357.54	799.08	SLU 80	2.23	Si
fin.	3	924	95.67	799.08	SLU 80	8.35	Si
ini.	3	-104	-358.52	799.08	SLU 83	2.23	Si
fin.	3	947	89.24	799.08	SLU 83	8.95	Si
ini.	3	-44	-347.78	799.08	SLU 77	2.3	Si
fin.	3	952	81.95	799.08	SLU 77	9.75	Si

Verifiche a taglio delle travi in muratura secondo §C8.7.1.3.1 in combinazioni non sismiche

Sezione	γM	N	M	V	Vt	Vp	Vt fess. diag.	Vt,lim	Comb.	c.s.	Verifica
ini.	3	-50	-315.06	3008			621	236	SLU 58	0.08	No
fin.	3	862	69.56	-1088			607	0	SLU 58	0	No
ini.	3	-31	-316.22	3027			616	233	SLU 56	0.08	No
fin.	3	871	68.55	-1108			607	0	SLU 56	0	No
ini.	3	-85	-320.32	2991			632	242	SLU 54	0.08	No
fin.	3	817	78.5	-1038			607	0	SLU 54	0	No
ini.	3	-98	-325.98	3031			636	244	SLU 59	0.08	No
fin.	3	842	82.27	-1031			607	0	SLU 59	0	No
ini.	3	-97	-320.14	3059			636	244	SLU 60	0.08	No
fin.	3	832	73.08	-1092			607	0	SLU 60	0	No
ini.	3	-161	-318.28	2985			655	253	SLU 42	0.08	No
fin.	3	784	95.57	-943			607	0	SLU 42	0	No
ini.	3	-146	-331.06	3083			650	251	SLU 61	0.08	No
fin.	3	812	85.79	-1034			607	0	SLU 61	0	No
ini.	3	-79	-327.14	3051			630	241	SLU 57	0.08	No
fin.	3	851	81.26	-1051			607	0	SLU 57	0	No
ini.	3	-136	-326.45	2987			647	250	SLU 55	0.08	No
fin.	3	795	87.98	-979			607	0	SLU 55	0	No
ini.	3	-37	-309.4	2967			618	234	SLU 53	0.08	No

Sezione	γM	N	M	V	Vt	Vp	Vt fess. diag.	Vt,lim	Comb.	c.s.	Verifica
fin.	3	838	65.79	-1095			607	0	SLU 53	0	No

Verifiche a pressoflessione delle travi in muratura in combinazioni sismiche

Sezione	γM	N	M	Mu	Comb.	c.s.	Verifica
ini.	2	2378	221.03	1198.62	SLV 5	5.42	Si
fin.	2	-604	-606.48	1198.62	SLV 5	1.98	Si
ini.	2	-3926	-1036.95	1198.62	SLV 14	1.16	Si
fin.	2	2612	615.26	1198.62	SLV 14	1.95	Si
ini.	2	4567	694.41	1198.62	SLV 1	1.73	Si
fin.	2	-1723	-787.86	1198.62	SLV 1	1.52	Si
ini.	2	-2409	-677.22	1198.62	SLV 11	1.77	Si
fin.	2	1835	699.34	1198.62	SLV 11	1.71	Si
ini.	2	-4598	-1150.61	1198.62	SLV 15	1.04	Si
fin.	2	2954	880.72	1198.62	SLV 15	1.36	Si
ini.	2	4567	694.41	1198.62	SLV 2	1.73	Si
fin.	2	-1723	-787.86	1198.62	SLV 2	1.52	Si
ini.	2	-3926	-1036.95	1198.62	SLV 13	1.16	Si
fin.	2	2612	615.26	1198.62	SLV 13	1.95	Si
ini.	2	2378	221.03	1198.62	SLV 6	5.42	Si
fin.	2	-604	-606.48	1198.62	SLV 6	1.98	Si
ini.	2	-4598	-1150.61	1198.62	SLV 16	1.04	Si
fin.	2	2954	880.72	1198.62	SLV 16	1.36	Si
ini.	2	-2409	-677.22	1198.62	SLV 12	1.77	Si
fin.	2	1835	699.34	1198.62	SLV 12	1.71	Si

Verifiche a taglio delle travi in muratura secondo §C8.7.1.3.1 in combinazioni sismiche

Sezione	γM	N	M	V	Vt	Vp	Vt fess. diag.	Vt,lim	Comb.	c.s.	Verifica
ini.	2	-3926	-1036.95	6521			2088	745	SLV 14	0.11	No
fin.	2	2612	615.26	2051			910	0	SLV 14	0	No
ini.	2	-2409	-677.22	4305			1633	621	SLV 12	0.14	No
fin.	2	1835	699.34	1846			910	0	SLV 12	0	No
ini.	2	-2409	-677.22	4305			1633	621	SLV 11	0.14	No
fin.	2	1835	699.34	1846			910	0	SLV 11	0	No
ini.	2	3895	580.76	-2108			910	0	SLV 3	0	No
fin.	2	-1381	-522.4	-3724			1324	521	SLV 3	0.14	No
ini.	2	-3926	-1036.95	6521			2088	745	SLV 13	0.11	No
fin.	2	2612	615.26	2051			910	0	SLV 13	0	No
ini.	2	4567	694.41	-2550			910	0	SLV 2	0	No
fin.	2	-1723	-787.86	-4724			1427	556	SLV 2	0.12	No
ini.	2	3895	580.76	-2108			910	0	SLV 4	0	No
fin.	2	-1381	-522.4	-3724			1324	521	SLV 4	0.14	No
ini.	2	2378	221.03	108			910	0	SLV 6	0	No
fin.	2	-604	-606.48	-3519			1091	430	SLV 6	0.12	No
ini.	2	2378	221.03	108			910	0	SLV 5	0	No
fin.	2	-604	-606.48	-3519			1091	430	SLV 5	0.12	No
ini.	2	4567	694.41	-2550			910	0	SLV 1	0	No
fin.	2	-1723	-787.86	-4724			1427	556	SLV 1	0.12	No

Tabella dei coefficienti di sicurezza minimi

Stato limite	Coeff.s.	Comb.	Verifica
PF_SLV	1.042	SLV 15	Si
V_SLV	0	SLV 1	No
PF_SLU	2.163	SLU 84	Si
V_SLU	0	SLU 14	No

Trave di accoppiamento 98

Verifiche condotte secondo D.M. 17-01-18 (N.T.C.)

Dati geometrici

X ini.	Y ini.	Z ini.inf.	Z ini.sup.	H ini.	X fin.	Y fin.	Z fin.inf.	Z fin.sup	H fin.	Luce	Spessore	R. Trazione
-5.454	-3.248	4.35	6.35	2	-5.954	-3.248	4.35	6.35	2	0.5	0.28	30000

Caratteristiche del materiale

(Circolare 7 21-01-19 C8.5.I) Muratura in mattoni pieni e malta di calce LC2_Corti

fb_	fhk	fvk0	fhmedio	τ0	fv0	μ	ϕ	fvk,lim	E	G	FC
120000			172500	9000	20000	0.577	0.767	6500	320000000	128000000	1.2

Verifiche a pressoflessione delle travi in muratura in combinazioni non sismiche

Sezione	γM	N	M	Mu	Comb.	c.s.	Verifica
ini.	3	1293	1063.75	5682.35	SLU 78	5.34	Si
fin.	3	1682	1335.52	5682.35	SLU 78	4.25	Si
ini.	3	1233	1406.14	5682.35	SLU 81	4.04	Si
fin.	3	1876	1438.44	5682.35	SLU 81	3.95	Si
ini.	3	1170	1381.47	5682.35	SLU 77	4.11	Si
fin.	3	1803	1415.12	5682.35	SLU 77	4.02	Si
ini.	3	1282	1044.5	5682.35	SLU 75	5.44	Si
fin.	3	1663	1315.7	5682.35	SLU 75	4.32	Si
ini.	3	1167	1370.14	5682.35	SLU 79	4.15	Si
fin.	3	1794	1406.86	5682.35	SLU 79	4.04	Si
ini.	3	1367	1107.67	5682.35	SLU 84	5.13	Si
fin.	3	1775	1378.66	5682.35	SLU 84	4.12	Si
ini.	3	1244	1425.39	5682.35	SLU 83	3.99	Si
fin.	3	1895	1458.26	5682.35	SLU 83	3.9	Si
ini.	3	1159	1362.22	5682.35	SLU 74	4.17	Si
fin.	3	1783	1395.3	5682.35	SLU 74	4.07	Si
ini.	3	1356	1088.43	5682.35	SLU 82	5.22	Si

Sezione	γM	N	M	Mu	Comb.	c.s.	Verifica
fin.	3	1755	1358.84	5682.35	SLU 82	4.18	Si
ini.	3	1290	1052.42	5682.35	SLU 80	5.4	Si
fin.	3	1673	1327.26	5682.35	SLU 80	4.28	Si

Verifiche a taglio delle travi in muratura secondo §C8.7.1.3.1 in combinazioni non sismiche

Sezione	γM	N	M	V	Vt	Vp	Vt fess. diag.	Vt,lim	Comb.	c.s.	Verifica
ini.	3	1282	1044.5	-774			2157	454	SLU 75	0.59	No
fin.	3	1663	1315.7	3310			2157	268	SLU 75	0.08	No
ini.	3	1290	1052.42	-779			2157	451	SLU 80	0.58	No
fin.	3	1673	1327.26	3339			2157	261	SLU 80	0.08	No
ini.	3	1233	1406.14	-1782			2157	473	SLU 81	0.27	No
fin.	3	1876	1438.44	2325			2157	0	SLU 81	0	No
ini.	3	1356	1088.43	-821			2157	425	SLU 82	0.52	No
fin.	3	1755	1358.84	3300			2157	198	SLU 82	0.06	No
ini.	3	1367	1107.67	-851			2157	420	SLU 84	0.49	No
fin.	3	1775	1378.66	3347			2157	180	SLU 84	0.05	No
ini.	3	1167	1370.14	-1740			2157	497	SLU 79	0.29	No
fin.	3	1794	1406.86	2365			2157	160	SLU 79	0.07	No
ini.	3	1293	1063.75	-804			2157	450	SLU 78	0.56	No
fin.	3	1682	1335.52	3357			2157	255	SLU 78	0.08	No
ini.	3	1170	1381.47	-1765			2157	496	SLU 77	0.28	No
fin.	3	1803	1415.12	2382			2157	150	SLU 77	0.06	No
ini.	3	1159	1362.22	-1735			2157	500	SLU 74	0.29	No
fin.	3	1783	1395.3	2336			2157	172	SLU 74	0.07	No
ini.	3	1244	1425.39	-1812			2157	469	SLU 83	0.26	No
fin.	3	1895	1458.26	2372			2157	0	SLU 83	0	No

Verifiche a pressoflessione delle travi in muratura in combinazioni sismiche

Sezione	γM	N	M	Mu	Comb.	c.s.	Verifica
ini.	2	-2190	2417.72	8523.53	SLV 2	3.53	Si
fin.	2	-1234	-400.44	8523.53	SLV 2	21.29	Si
ini.	2	3355	-1508.46	8523.53	SLV 14	5.65	Si
fin.	2	2841	1940.53	8523.53	SLV 14	4.39	Si
ini.	2	3681	-605.33	8523.53	SLV 15	14.08	Si
fin.	2	3561	2279.77	8523.53	SLV 15	3.74	Si
ini.	2	-1865	3320.84	8523.53	SLV 4	2.57	Si
fin.	2	-513	-61.2	8523.53	SLV 4	139.28	Si
ini.	2	3681	-605.33	8523.53	SLV 16	14.08	Si
fin.	2	3561	2279.77	8523.53	SLV 16	3.74	Si
ini.	2	3355	-1508.46	8523.53	SLV 13	5.65	Si
fin.	2	2841	1940.53	8523.53	SLV 13	4.39	Si
ini.	2	-1865	3320.84	8523.53	SLV 3	2.57	Si
fin.	2	-513	-61.2	8523.53	SLV 3	139.28	Si
ini.	2	455	3000.33	8523.53	SLV 7	2.84	Si
fin.	2	1753	1153.92	8523.53	SLV 7	7.39	Si
ini.	2	455	3000.33	8523.53	SLV 8	2.84	Si
fin.	2	1753	1153.92	8523.53	SLV 8	7.39	Si
ini.	2	-2190	2417.72	8523.53	SLV 1	3.53	Si
fin.	2	-1234	-400.44	8523.53	SLV 1	21.29	Si

Verifiche a taglio delle travi in muratura secondo §C8.7.1.3.1 in combinazioni sismiche

Sezione	γM	N	M	V	Vt	Vp	Vt fess. diag.	Vt,lim	Comb.	c.s.	Verifica
ini.	2	-1865	3320.84	-9195			3981	1571	SLV 3	0.17	No
fin.	2	-513	-61.2	-7688			3440	1324	SLV 3	0.17	No
ini.	2	-1865	3320.84	-9195			3981	1571	SLV 4	0.17	No
fin.	2	-513	-61.2	-7688			3440	1324	SLV 4	0.17	No
ini.	2	3355	-1508.46	6936			3235	0	SLV 14	0	No
fin.	2	2841	1940.53	11005			3235	0	SLV 14	0	No
ini.	2	3355	-1508.46	6936			3235	0	SLV 13	0	No
fin.	2	2841	1940.53	11005			3235	0	SLV 13	0	No
ini.	2	3681	-605.33	5662			3235	0	SLV 15	0	No
fin.	2	3561	2279.77	8945			3235	0	SLV 15	0	No
ini.	2	1035	-1187.94	3224			3235	966	SLV 9	0.3	No
fin.	2	574	725.41	7586			3235	1085	SLV 9	0.14	No
ini.	2	2119	1822.48	-1025			3235	600	SLV 12	0.59	No
fin.	2	2976	1856.21	721			3235	0	SLV 12	0	No
ini.	2	1035	-1187.94	3224			3235	966	SLV 10	0.3	No
fin.	2	574	725.41	7586			3235	1085	SLV 10	0.14	No
ini.	2	3681	-605.33	5662			3235	0	SLV 16	0	No
fin.	2	3561	2279.77	8945			3235	0	SLV 16	0	No
ini.	2	2119	1822.48	-1025			3235	600	SLV 11	0.59	No
fin.	2	2976	1856.21	721			3235	0	SLV 11	0	No

Tabella dei coefficienti di sicurezza minimi

Stato limite	Coeff.s.	Comb.	Verifica
PF_SLV	2.567	SLV 3	Si
V_SLV	0	SLV 11	No
PF_SLU	3.897	SLU 83	Si
V_SLU	0	SLU 81	No

Trave di accoppiamento 99

Verifiche condotte secondo D.M. 17-01-18 (N.T.C.)

Dati geometrici

X ini.	Y ini.	Z ini.inf.	Z ini.sup.	H ini.	X fin.	Y fin.	Z fin.inf.	Z fin.sup	H fin.	Luce	Spessore	R. Trazione
-5.454	-3.248	7.15	7.9	0.75	-5.954	-3.248	7.15	7.9	0.75	0.5	0.28	30000

Caratteristiche del materiale

(Circolare 7 21-01-19 C8.5.I) Muratura in mattoni pieni e malta di calce LC2_Corti

fb_	fhk	fvk0	fhmedio	τ0	fv0	μ	ϕ	fvk,lim	E	G	FC
120000			172500	9000	20000	0.577	0.767	6500	320000000	128000000	1.2

Verifiche a pressoflessione delle travi in muratura in combinazioni non sismiche

Sezione	γM	N	M	Mu	Comb.	c.s.	Verifica
ini.	3	379	151.84	799.08	SLU 77	5.26	Si
fin.	3	68	-214.99	799.08	SLU 77	3.72	Si
ini.	3	354	148.01	799.08	SLU 79	5.4	Si
fin.	3	47	-213.91	799.08	SLU 79	3.74	Si
ini.	3	297	132.79	799.08	SLU 62	6.02	Si
fin.	3	16	-200.16	799.08	SLU 62	3.99	Si
ini.	3	301	148.64	799.08	SLU 81	5.38	Si
fin.	3	-9	-218.3	799.08	SLU 81	3.66	Si
ini.	3	252	133.93	799.08	SLU 41	5.97	Si
fin.	3	-31	-192.14	799.08	SLU 41	4.16	Si
ini.	3	355	132.27	799.08	SLU 56	6.04	Si
fin.	3	83	-192.94	799.08	SLU 56	4.14	Si
ini.	3	321	152.35	799.08	SLU 83	5.24	Si
fin.	3	1	-222.22	799.08	SLU 83	3.6	Si
ini.	3	359	148.12	799.08	SLU 74	5.39	Si
fin.	3	57	-211.08	799.08	SLU 74	3.79	Si
ini.	3	278	129.08	799.08	SLU 60	6.19	Si
fin.	3	6	-196.25	799.08	SLU 60	4.07	Si
ini.	3	330	128.44	799.08	SLU 58	6.22	Si
fin.	3	62	-191.86	799.08	SLU 58	4.16	Si

Verifiche a taglio delle travi in muratura secondo §C8.7.1.3.1 in combinazioni non sismiche

Sezione	γM	N	M	V	Vt	Vp	Vt fess. diag.	Vt,lim	Comb.	c.s.	Verifica
ini.	3	354	148.01	-207			809	214	SLU 79	1.03	Si
fin.	3	47	-213.91	-3700			809	294	SLU 79	0.08	No
ini.	3	359	148.12	-203			809	212	SLU 74	1.04	Si
fin.	3	57	-211.08	-3670			809	292	SLU 74	0.08	No
ini.	3	311	85.31	65			809	227	SLU 78	3.51	Si
fin.	3	103	-184	-3500			809	281	SLU 78	0.08	No
ini.	3	321	152.35	-226			809	224	SLU 83	0.99	No
fin.	3	1	-222.22	-3801			809	304	SLU 83	0.08	No
ini.	3	286	81.48	70			809	234	SLU 80	3.34	Si
fin.	3	83	-182.92	-3455			809	286	SLU 80	0.08	No
ini.	3	410	133.04	-146			809	196	SLU 69	1.34	Si
fin.	3	150	-186.49	-3332			809	270	SLU 69	0.08	No
ini.	3	301	148.64	-217			809	230	SLU 81	1.06	Si
fin.	3	-9	-218.3	-3726			812	306	SLU 81	0.08	No
ini.	3	379	151.84	-213			809	206	SLU 77	0.97	No
fin.	3	68	-214.99	-3745			809	289	SLU 77	0.08	No
ini.	3	253	85.83	51			809	243	SLU 84	4.76	Si
fin.	3	37	-191.22	-3556			809	296	SLU 84	0.08	No
ini.	3	291	81.6	74			809	233	SLU 75	3.14	Si
fin.	3	92	-180.08	-3425			809	284	SLU 75	0.08	No

Verifiche a pressoflessione delle travi in muratura in combinazioni sismiche

Sezione	γM	N	M	Mu	Comb.	c.s.	Verifica
ini.	2	4258	1070.1	1198.62	SLV 3	1.12	Si
fin.	2	3115	-58.74	1198.62	SLV 3	20.41	Si
ini.	2	-3857	-677.47	1198.62	SLV 15	1.77	Si
fin.	2	-3662	-339.55	1198.62	SLV 15	3.53	Si
ini.	2	1299	695.43	1198.62	SLV 8	1.72	Si
fin.	2	-42	-295.25	1198.62	SLV 8	4.06	Si
ini.	2	4361	866.98	1198.62	SLV 2	1.38	Si
fin.	2	3788	59.74	1198.62	SLV 2	20.06	Si
ini.	2	-3857	-677.47	1198.62	SLV 16	1.77	Si
fin.	2	-3662	-339.55	1198.62	SLV 16	3.53	Si
ini.	2	-3755	-880.59	1198.62	SLV 14	1.36	Si
fin.	2	-2989	-221.07	1198.62	SLV 14	5.42	Si
ini.	2	1299	695.43	1198.62	SLV 7	1.72	Si
fin.	2	-42	-295.25	1198.62	SLV 7	4.06	Si
ini.	2	-3755	-880.59	1198.62	SLV 13	1.36	Si
fin.	2	-2989	-221.07	1198.62	SLV 13	5.42	Si
ini.	2	4258	1070.1	1198.62	SLV 4	1.12	Si
fin.	2	3115	-58.74	1198.62	SLV 4	20.41	Si
ini.	2	4361	866.98	1198.62	SLV 1	1.38	Si
fin.	2	3788	59.74	1198.62	SLV 1	20.06	Si

Verifiche a taglio delle travi in muratura secondo §C8.7.1.3.1 in combinazioni sismiche

Sezione	γM	N	M	V	Vt	Vp	Vt fess. diag.	Vt,lim	Comb.	c.s.	Verifica
ini.	2	4258	1070.1	-2584			1213	0	SLV 4	0	No
fin.	2	3115	-58.74	-4160			1213	0	SLV 4	0	No
ini.	2	-1136	171.15	-819			1667	659	SLV 12	0.8	No
fin.	2	-2075	-379.49	-3153			2043	788	SLV 12	0.25	No
ini.	2	1640	18.35	615			1213	0	SLV 6	0	No
fin.	2	2201	99.69	-1743			1213	0	SLV 6	0	No
ini.	2	1640	18.35	615			1213	0	SLV 5	0	No
fin.	2	2201	99.69	-1743			1213	0	SLV 5	0	No
ini.	2	4361	866.98	-1779			1213	0	SLV 1	0	No
fin.	2	3788	59.74	-3489			1213	0	SLV 1	0	No
ini.	2	1299	695.43	-2067			1213	0	SLV 8	0	No
fin.	2	-42	-295.25	-3979			1230	465	SLV 8	0.12	No
ini.	2	1299	695.43	-2067			1213	0	SLV 7	0	No
fin.	2	-42	-295.25	-3979			1230	465	SLV 7	0.12	No

Sezione	γM	N	M	V	Vt	Vp	Vt fess. diag.	Vt,lim	Comb.	c.s.	Verifica
ini.	2	4361	866.98	-1779			1213	0	SLV 2	0	No
fin.	2	3788	59.74	-3489			1213	0	SLV 2	0	No
ini.	2	-1136	171.15	-819			1667	659	SLV 11	0.8	No
fin.	2	-2075	-379.49	-3153			2043	788	SLV 11	0.25	No
ini.	2	4258	1070.1	-2584			1213	0	SLV 3	0	No
fin.	2	3115	-58.74	-4160			1213	0	SLV 3	0	No

Tabella dei coefficienti di sicurezza minimi

Stato limite	Coeff.s.	Comb.	Verifica
PF_SLV	1.12	SLV 3	Si
V_SLV	0	SLV 1	No
PF_SLU	3.596	SLU 83	Si
V_SLU	0.077	SLU 77	No

Trave di accoppiamento 100

Verifiche condotte secondo D.M. 17-01-18 (N.T.C.)

Dati geometrici

X ini.	Y ini.	Z ini.inf.	Z ini.sup.	H ini.	X fin.	Y fin.	Z fin.inf.	Z fin.sup	H fin.	Luce	Spessore	R. Trazione
-2.223	-3.248	4.35	5.25	0.9	-3.223	-3.248	4.35	5.25	0.9	1	0.28	30000

Caratteristiche del materiale

(Circolare 7 21-01-19 C8.5.I) Muratura in mattoni pieni e malta di calce LC2_Corti

fb_	fhk	fvk0	fhmedio	τ0	fv0	μ	ϕ	fvk,lim	E	G	FC
120000			172500	9000	20000	0.577	0.767	6500	320000000	128000000	1.2

Verifiche a pressoflessione delle travi in muratura in combinazioni non sismiche

Sezione	γM	N	M	Mu	Comb.	c.s.	Verifica
ini.	3	339	217.46	1150.68	SLU 49	5.29	Si
fin.	3	621	2.52	1150.68	SLU 49	455.72	Si
ini.	3	593	219.32	1150.68	SLU 52	5.25	Si
fin.	3	902	-12.36	1150.68	SLU 52	93.1	Si
ini.	3	518	226.54	1150.68	SLU 47	5.08	Si
fin.	3	857	-24.59	1150.68	SLU 47	46.79	Si
ini.	3	676	221.41	1150.68	SLU 76	5.2	Si
fin.	3	966	1.78	1150.68	SLU 76	648.21	Si
ini.	3	666	219.53	1150.68	SLU 73	5.24	Si
fin.	3	959	-0.67	1150.68	SLU 73	1721.88	Si
ini.	3	508	224.66	1150.68	SLU 44	5.12	Si
fin.	3	850	-27.03	1150.68	SLU 44	42.56	Si
ini.	3	591	226.75	1150.68	SLU 68	5.07	Si
fin.	3	913	-12.9	1150.68	SLU 68	89.21	Si
ini.	3	412	217.67	1150.68	SLU 70	5.29	Si
fin.	3	677	14.22	1150.68	SLU 70	80.94	Si
ini.	3	603	221.21	1150.68	SLU 55	5.2	Si
fin.	3	910	-9.92	1150.68	SLU 55	116.04	Si
ini.	3	581	224.86	1150.68	SLU 65	5.12	Si
fin.	3	906	-15.34	1150.68	SLU 65	75	Si

Verifiche a taglio delle travi in muratura secondo §C8.7.1.3.1 in combinazioni non sismiche

Sezione	γM	N	M	V	Vt	Vp	Vt fess. diag.	Vt,lim	Comb.	c.s.	Verifica
ini.	3	680	174.7	-1387			873	143	SLU 31	0.1	No
fin.	3	921	-4.94	1379			873	0	SLU 31	0	No
ini.	3	591	226.75	-1622			873	179	SLU 68	0.11	No
fin.	3	913	-12.9	1507			873	0	SLU 68	0	No
ini.	3	593	219.32	-1568			873	178	SLU 52	0.11	No
fin.	3	902	-12.36	1466			873	0	SLU 52	0	No
ini.	3	605	181.92	-1382			873	174	SLU 26	0.13	No
fin.	3	876	-17.17	1291			873	0	SLU 26	0	No
ini.	3	508	224.66	-1536			873	207	SLU 44	0.13	No
fin.	3	850	-27.03	1336			873	0	SLU 44	0	No
ini.	3	617	176.38	-1356			873	169	SLU 13	0.12	No
fin.	3	872	-14.19	1291			873	0	SLU 13	0	No
ini.	3	603	221.21	-1596			873	175	SLU 55	0.11	No
fin.	3	910	-9.92	1507			873	0	SLU 55	0	No
ini.	3	518	226.54	-1563			873	204	SLU 47	0.13	No
fin.	3	857	-24.59	1378			873	0	SLU 47	0	No
ini.	3	581	224.86	-1595			873	182	SLU 65	0.11	No
fin.	3	906	-15.34	1466			873	0	SLU 65	0	No
ini.	3	690	176.59	-1414			873	139	SLU 34	0.1	No
fin.	3	928	-2.5	1420			873	0	SLU 34	0	No

Verifiche a pressoflessione delle travi in muratura in combinazioni sismiche

Sezione	γM	N	M	Mu	Comb.	c.s.	Verifica
ini.	2	2262	-1153.13	1726.01	SLV 14	1.5	Si
fin.	2	-2378	978.59	1726.01	SLV 14	1.76	Si
ini.	2	-2098	1449.52	1726.01	SLV 4	1.19	Si
fin.	2	2817	-908.32	1726.01	SLV 4	1.9	Si
ini.	2	-2098	1449.52	1726.01	SLV 3	1.19	Si
fin.	2	2817	-908.32	1726.01	SLV 3	1.9	Si
ini.	2	-14	722.91	1726.01	SLV 5	2.39	Si
fin.	2	1640	-463.9	1726.01	SLV 5	3.72	Si
ini.	2	2262	-1153.13	1726.01	SLV 13	1.5	Si
fin.	2	-2378	978.59	1726.01	SLV 13	1.76	Si
ini.	2	-1791	1550.98	1726.01	SLV 2	1.11	Si
fin.	2	3170	-1027.22	1726.01	SLV 2	1.68	Si

Sezione	γM	N	M	Mu	Comb.	c.s.	Verifica
ini.	2	-1791	1550.98	1726.01	SLV 1	1.11	Si
fin.	2	3170	-1027.22	1726.01	SLV 1	1.68	Si
ini.	2	1955	-1254.6	1726.01	SLV 16	1.38	Si
fin.	2	-2731	1097.49	1726.01	SLV 16	1.57	Si
ini.	2	1955	-1254.6	1726.01	SLV 15	1.38	Si
fin.	2	-2731	1097.49	1726.01	SLV 15	1.57	Si
ini.	2	-14	722.91	1726.01	SLV 6	2.39	Si
fin.	2	1640	-463.9	1726.01	SLV 6	3.72	Si

Verifiche a taglio delle travi in muratura secondo §C8.7.1.3.1 in combinazioni sismiche

Sezione	γM	N	M	V	Vt	Vp	Vt fess. diag.	Vt,lim	Comb.	c.s.	Verifica
ini.	2	-2098	1449.52	-4610			2066	805	SLV 4	0.17	No
fin.	2	2817	-908.32	-4702			1310	0	SLV 4	0	No
ini.	2	-1791	1550.98	-5321			1955	767	SLV 1	0.14	No
fin.	2	3170	-1027.22	-4072			1310	0	SLV 1	0	No
ini.	2	-1791	1550.98	-5321			1955	767	SLV 2	0.14	No
fin.	2	3170	-1027.22	-4072			1310	0	SLV 2	0	No
ini.	2	1955	-1254.6	3532			1310	0	SLV 15	0	No
fin.	2	-2731	1097.49	5961			2293	877	SLV 15	0.15	No
ini.	2	-2098	1449.52	-4610			2066	805	SLV 3	0.17	No
fin.	2	2817	-908.32	-4702			1310	0	SLV 3	0	No
ini.	2	2262	-1153.13	2820			1310	0	SLV 14	0	No
fin.	2	-2378	978.59	6592			2166	838	SLV 14	0.13	No
ini.	2	-14	722.91	-3302			1315	496	SLV 5	0.15	No
fin.	2	1640	-463.9	396			1310	0	SLV 5	0	No
ini.	2	2262	-1153.13	2820			1310	0	SLV 13	0	No
fin.	2	-2378	978.59	6592			2166	838	SLV 13	0.13	No
ini.	2	1955	-1254.6	3532			1310	0	SLV 16	0	No
fin.	2	-2731	1097.49	5961			2293	877	SLV 16	0.15	No
ini.	2	-14	722.91	-3302			1315	496	SLV 6	0.15	No
fin.	2	1640	-463.9	396			1310	0	SLV 6	0	No

Tabella dei coefficienti di sicurezza minimi

Stato limite	Coeff.s.	Comb.	Verifica
PF_SLV	1.113	SLV 1	Si
V_SLV	0	SLV 1	No
PF_SLU	5.075	SLU 68	Si
V_SLU	0	SLU 10	No

Trave di accoppiamento 101

Verifiche condotte secondo D.M. 17-01-18 (N.T.C.)

Dati geometrici

X ini.	Y ini.	Z ini.inf.	Z ini.sup.	H ini.	X fin.	Y fin.	Z fin.inf.	Z fin.sup	H fin.	Luce	Spessore	R. Trazione
-2.223	-3.248	7.15	7.9	0.75	-3.223	-3.248	7.15	7.9	0.75	1	0.28	30000

Caratteristiche del materiale

(Circolare 7 21-01-19 C8.5.I) Muratura in mattoni pieni e malta di calce LC2_Corti

fb_	fhk	fvk0	fhmedio	τ0	fv0	μ	ϕ	fvk,lim	E	G	FC
120000			172500	9000	20000	0.577	0.767	6500	320000000	128000000	1.2

Verifiche a pressoflessione delle travi in muratura in combinazioni non sismiche

Sezione	γM	N	M	Mu	Comb.	c.s.	Verifica
ini.	3	604	-41.47	799.08	SLU 79	19.27	Si
fin.	3	-147	-275.47	799.08	SLU 79	2.9	Si
ini.	3	616	-43.51	799.08	SLU 77	18.37	Si
fin.	3	-133	-276.91	799.08	SLU 77	2.89	Si
ini.	3	605	-39.67	799.08	SLU 74	20.14	Si
fin.	3	-147	-273.7	799.08	SLU 74	2.92	Si
ini.	3	584	-44.5	799.08	SLU 81	17.96	Si
fin.	3	-175	-275.62	799.08	SLU 81	2.9	Si
ini.	3	883	-19.06	799.08	SLU 80	41.93	Si
fin.	3	101	-265.64	799.08	SLU 80	3.01	Si
ini.	3	884	-17.26	799.08	SLU 75	46.29	Si
fin.	3	101	-263.87	799.08	SLU 75	3.03	Si
ini.	3	895	-21.1	799.08	SLU 78	37.87	Si
fin.	3	115	-267.09	799.08	SLU 78	2.99	Si
ini.	3	595	-48.34	799.08	SLU 83	16.53	Si
fin.	3	-161	-278.84	799.08	SLU 83	2.87	Si
ini.	3	863	-22.09	799.08	SLU 82	36.17	Si
fin.	3	73	-265.79	799.08	SLU 82	3.01	Si
ini.	3	874	-25.93	799.08	SLU 84	30.82	Si
fin.	3	87	-269.01	799.08	SLU 84	2.97	Si

Verifiche a taglio delle travi in muratura secondo §C8.7.1.3.1 in combinazioni non sismiche

Sezione	γM	N	M	V	Vt	Vp	Vt fess. diag.	Vt,lim	Comb.	c.s.	Verifica
ini.	3	935	-8.46	961			607	0	SLU 34	0	No
fin.	3	296	-205.41	-2361			607	173	SLU 34	0.07	No
ini.	3	856	26.58	804			607	0	SLU 51	0	No
fin.	3	94	-233.93	-2367			607	212	SLU 51	0.09	No
ini.	3	1018	49.2	736			607	0	SLU 44	0	No
fin.	3	232	-220.94	-2319			607	187	SLU 44	0.08	No
ini.	3	752	-34.11	1042			607	0	SLU 42	0	No
fin.	3	131	-218.55	-2422			607	206	SLU 42	0.08	No
ini.	3	761	-27.24	998			607	0	SLU 38	0	No
fin.	3	145	-215.18	-2366			607	203	SLU 38	0.09	No

Sezione	γM	N	M	V	Vt	Vp	Vt fess. diag.	Vt,lim	Comb.	c.s.	Verifica
ini.	3	773	-29.28	1014			607	0	SLU 36	0	No
fin.	3	159	-216.63	-2387			607	201	SLU 36	0.08	No
ini.	3	868	24.54	820			607	0	SLU 49	0	No
fin.	3	108	-235.38	-2388			607	210	SLU 49	0.09	No
ini.	3	741	-30.27	1012			607	0	SLU 40	0	No
fin.	3	117	-215.33	-2379			607	208	SLU 40	0.09	No
ini.	3	1030	45.36	767			607	0	SLU 47	0	No
fin.	3	245	-224.16	-2362			607	184	SLU 47	0.08	No
ini.	3	856	28.38	790			607	0	SLU 46	0	No
fin.	3	94	-232.16	-2346			607	212	SLU 46	0.09	No

Verifiche a pressoflessione delle travi in muratura in combinazioni sismiche

Sezione	γM	N	M	Mu	Comb.	c.s.	Verifica
ini.	2	-1692	-1043.14	1198.62	SLV 15	1.15	Si
fin.	2	1982	675.11	1198.62	SLV 15	1.78	Si
ini.	2	1669	872.45	1198.62	SLV 4	1.37	Si
fin.	2	-2188	-907.14	1198.62	SLV 4	1.32	Si
ini.	2	1669	872.45	1198.62	SLV 3	1.37	Si
fin.	2	-2188	-907.14	1198.62	SLV 3	1.32	Si
ini.	2	2571	1024.4	1198.62	SLV 1	1.17	Si
fin.	2	-2253	-1066.95	1198.62	SLV 1	1.12	Si
ini.	2	-791	-891.19	1198.62	SLV 13	1.34	Si
fin.	2	1917	515.3	1198.62	SLV 13	2.33	Si
ini.	2	-791	-891.19	1198.62	SLV 14	1.34	Si
fin.	2	1917	515.3	1198.62	SLV 14	2.33	Si
ini.	2	2446	531.21	1198.62	SLV 6	2.26	Si
fin.	2	-868	-699.6	1198.62	SLV 6	1.71	Si
ini.	2	2446	531.21	1198.62	SLV 5	2.26	Si
fin.	2	-868	-699.6	1198.62	SLV 5	1.71	Si
ini.	2	-1692	-1043.14	1198.62	SLV 16	1.15	Si
fin.	2	1982	675.11	1198.62	SLV 16	1.78	Si
ini.	2	2571	1024.4	1198.62	SLV 2	1.17	Si
fin.	2	-2253	-1066.95	1198.62	SLV 2	1.12	Si

Verifiche a taglio delle travi in muratura secondo §C8.7.1.3.1 in combinazioni sismiche

Sezione	γM	N	M	V	Vt	Vp	Vt fess. diag.	Vt,lim	Comb.	c.s.	Verifica
ini.	2	2571	1024.4	-2318			910	0	SLV 1	0	No
fin.	2	-2253	-1066.95	-5259			1586	607	SLV 1	0.12	No
ini.	2	2446	531.21	353			910	0	SLV 6	0	No
fin.	2	-868	-699.6	-3718			1170	463	SLV 6	0.12	No
ini.	2	2571	1024.4	-2318			910	0	SLV 2	0	No
fin.	2	-2253	-1066.95	-5259			1586	607	SLV 2	0.12	No
ini.	2	2446	531.21	353			910	0	SLV 5	0	No
fin.	2	-868	-699.6	-3718			1170	463	SLV 5	0.12	No
ini.	2	-791	-891.19	4109			1147	453	SLV 13	0.11	No
fin.	2	1917	515.3	924			910	0	SLV 13	0	No
ini.	2	1669	872.45	-2679			910	0	SLV 3	0	No
fin.	2	-2188	-907.14	-4725			1566	601	SLV 3	0.13	No
ini.	2	1438	-43.47	2281			910	0	SLV 9	0	No
fin.	2	383	-224.93	-1863			910	273	SLV 9	0.15	No
ini.	2	-791	-891.19	4109			1147	453	SLV 14	0.11	No
fin.	2	1917	515.3	924			910	0	SLV 14	0	No
ini.	2	1669	872.45	-2679			910	0	SLV 4	0	No
fin.	2	-2188	-907.14	-4725			1566	601	SLV 4	0.13	No
ini.	2	1438	-43.47	2281			910	0	SLV 10	0	No
fin.	2	383	-224.93	-1863			910	273	SLV 10	0.15	No

Tabella dei coefficienti di sicurezza minimi

Stato limite	Coeff.s.	Comb.	Verifica
PF_SLV	1.123	SLV 1	Si
V_SLV	0	SLV 1	No
PF_SLU	2.866	SLU 83	Si
V_SLU	0	SLU 2	No

Trave di accoppiamento 102

Verifiche condotte secondo D.M. 17-01-18 (N.T.C.)

Dati geometrici

X ini.	Y ini.	Z ini.inf.	Z ini.sup.	H ini.	X fin.	Y fin.	Z fin.inf.	Z fin.sup	H fin.	Luce	Spessore	R. Trazione
-1.889	5.83	4.35	5.25	0.9	-2.889	5.83	4.35	5.25	0.9	1	0.28	30000

Caratteristiche del materiale

(Circolare 7 21-01-19 C8.5.I) Muratura in mattoni pieni e malta di calce LC2_Corti

fb_	fhk	fvk0	fhmedio	τ0	fv0	μ	ϕ	fvk,lim	E	G	FC
120000			172500	9000	20000	0.577	0.767	6500	320000000	128000000	1.2

Verifiche a pressoflessione delle travi in muratura in combinazioni non sismiche

Sezione	γM	N	M	Mu	Comb.	c.s.	Verifica
ini.	3	642	-191.81	1150.68	SLU 77	6	Si
fin.	3	-500	485.96	1150.68	SLU 77	2.37	Si
ini.	3	590	-168.97	1150.68	SLU 75	6.81	Si
fin.	3	-456	456.67	1150.68	SLU 75	2.52	Si
ini.	3	642	-193.81	1150.68	SLU 78	5.94	Si
fin.	3	-507	488.05	1150.68	SLU 78	2.36	Si
ini.	3	547	-164.3	1150.68	SLU 70	7	Si
fin.	3	-485	445.82	1150.68	SLU 70	2.58	Si

Sezione	γM	N	M	Mu	Comb.	c.s.	Verifica
ini.	3	630	-181.46	1150.68	SLU 83	6.34	Si
fin.	3	-459	471.37	1150.68	SLU 83	2.44	Si
ini.	3	590	-166.98	1150.68	SLU 74	6.89	Si
fin.	3	-449	454.58	1150.68	SLU 74	2.53	Si
ini.	3	642	-193.65	1150.68	SLU 79	5.94	Si
fin.	3	-501	484.66	1150.68	SLU 79	2.37	Si
ini.	3	590	-172.13	1150.68	SLU 76	6.68	Si
fin.	3	-462	456.75	1150.68	SLU 76	2.52	Si
ini.	3	630	-183.45	1150.68	SLU 84	6.27	Si
fin.	3	-466	473.45	1150.68	SLU 84	2.43	Si
ini.	3	642	-195.64	1150.68	SLU 80	5.88	Si
fin.	3	-508	486.74	1150.68	SLU 80	2.36	Si

Verifiche a taglio delle travi in muratura secondo §C8.7.1.3.1 in combinazioni non sismiche

Sezione	γM	N	M	V	Vt	Vp	Vt fess. diag.	Vt,lim	Comb.	c.s.	Verifica
ini.	3	590	-168.97	-320			873	179	SLU 75	0.56	No
fin.	3	-456	456.67	2831			1037	408	SLU 75	0.14	No
ini.	3	630	-183.45	-281			873	164	SLU 84	0.58	No
fin.	3	-466	473.45	2906			1041	410	SLU 84	0.14	No
ini.	3	642	-195.64	-251			873	160	SLU 80	0.64	No
fin.	3	-508	486.74	2973			1056	416	SLU 80	0.14	No
ini.	3	630	-181.46	-287			873	164	SLU 83	0.57	No
fin.	3	-459	471.37	2898			1039	409	SLU 83	0.14	No
ini.	3	578	-158.61	-331			873	184	SLU 82	0.55	No
fin.	3	-415	442.07	2744			1023	402	SLU 82	0.15	No
ini.	3	642	-193.65	-257			873	160	SLU 79	0.62	No
fin.	3	-501	484.66	2965			1054	415	SLU 79	0.14	No
ini.	3	642	-193.81	-270			873	160	SLU 78	0.59	No
fin.	3	-507	488.05	2993			1056	416	SLU 78	0.14	No
ini.	3	590	-172.13	-297			873	179	SLU 76	0.6	No
fin.	3	-462	456.75	2816			1040	409	SLU 76	0.15	No
ini.	3	642	-191.81	-276			873	160	SLU 77	0.58	No
fin.	3	-500	485.96	2985			1053	415	SLU 77	0.14	No
ini.	3	590	-166.98	-326			873	179	SLU 74	0.55	No
fin.	3	-449	454.58	2822			1035	407	SLU 74	0.14	No

Verifiche a pressoflessione delle travi in muratura in combinazioni sismiche

Sezione	γM	N	M	Mu	Comb.	c.s.	Verifica
ini.	2	2702	-1412.72	1726.01	SLV 16	1.22	Si
fin.	2	-3118	1603.45	1726.01	SLV 16	1.08	Si
ini.	2	-2010	1234.49	1726.01	SLV 2	1.4	Si
fin.	2	2543	-1017.08	1726.01	SLV 2	1.7	Si
ini.	2	2272	-1021.54	1726.01	SLV 14	1.69	Si
fin.	2	-2130	1188.28	1726.01	SLV 14	1.45	Si
ini.	2	-1013	901.26	1726.01	SLV 6	1.92	Si
fin.	2	2060	-729.58	1726.01	SLV 6	2.37	Si
ini.	2	-1013	901.26	1726.01	SLV 5	1.92	Si
fin.	2	2060	-729.58	1726.01	SLV 5	2.37	Si
ini.	2	-2010	1234.49	1726.01	SLV 1	1.4	Si
fin.	2	2543	-1017.08	1726.01	SLV 1	1.7	Si
ini.	2	2702	-1412.72	1726.01	SLV 15	1.22	Si
fin.	2	-3118	1603.45	1726.01	SLV 15	1.08	Si
ini.	2	2272	-1021.54	1726.01	SLV 13	1.69	Si
fin.	2	-2130	1188.28	1726.01	SLV 13	1.45	Si
ini.	2	1705	-1079.5	1726.01	SLV 12	1.6	Si
fin.	2	-2635	1315.94	1726.01	SLV 12	1.31	Si
ini.	2	1705	-1079.5	1726.01	SLV 11	1.6	Si
fin.	2	-2635	1315.94	1726.01	SLV 11	1.31	Si

Verifiche a taglio delle travi in muratura secondo §C8.7.1.3.1 in combinazioni sismiche

Sezione	γM	N	M	V	Vt	Vp	Vt fess. diag.	Vt,lim	Comb.	c.s.	Verifica
ini.	2	1705	-1079.5	-3			1310	0	SLV 11	0	No
fin.	2	-2635	1315.94	5463			2259	867	SLV 11	0.16	No
ini.	2	2272	-1021.54	4062			1310	0	SLV 14	0	No
fin.	2	-2130	1188.28	6024			2077	809	SLV 14	0.13	No
ini.	2	1705	-1079.5	-3			1310	0	SLV 12	0	No
fin.	2	-2635	1315.94	5463			2259	867	SLV 12	0.16	No
ini.	2	2272	-1021.54	4062			1310	0	SLV 13	0	No
fin.	2	-2130	1188.28	6024			2077	809	SLV 13	0.13	No
ini.	2	-1013	901.26	-608			1675	662	SLV 5	1.09	Si
fin.	2	2060	-729.58	-1739			1310	0	SLV 5	0	No
ini.	2	-2010	1234.49	-4118			2034	794	SLV 2	0.19	No
fin.	2	2543	-1017.08	-3594			1310	0	SLV 2	0	No
ini.	2	-2010	1234.49	-4118			2034	794	SLV 1	0.19	No
fin.	2	2543	-1017.08	-3594			1310	0	SLV 1	0	No
ini.	2	-1013	901.26	-608			1675	662	SLV 6	1.09	Si
fin.	2	2060	-729.58	-1739			1310	0	SLV 6	0	No
ini.	2	-1579	843.3	-4673			1879	740	SLV 3	0.16	No
fin.	2	1555	-601.91	-2300			1310	0	SLV 3	0	No
ini.	2	-1579	843.3	-4673			1879	740	SLV 4	0.16	No
fin.	2	1555	-601.91	-2300			1310	0	SLV 4	0	No

Tabella dei coefficienti di sicurezza minimi

Stato limite	Coeff.s.	Comb.	Verifica
PF_SLV	1.076	SLV 15	Si
V_SLV	0	SLV 1	No
PF_SLU	2.358	SLU 78	Si
V_SLU	0.139	SLU 78	No

Trave di accoppiamento 103

Verifiche condotte secondo D.M. 17-01-18 (N.T.C.)

Dati geometrici

X ini.	Y ini.	Z ini.inf.	Z ini.sup.	H ini.	X fin.	Y fin.	Z fin.inf.	Z fin.sup	H fin.	Luce	Spessore	R. Trazione
-1.889	5.83	7.15	7.9	0.75	-2.889	5.83	7.15	7.9	0.75	1	0.28	30000

Caratteristiche del materiale

(Circolare 7 21-01-19 C8.5.I) Muratura in mattoni pieni e malta di calce LC2_Corti

fb_	fhk	fvk0	fhmedio	τ0	fv0	μ	ϕ	fvk,lim	E	G	FC
120000			172500	9000	20000	0.577	0.767	6500	320000000	128000000	1.2

Verifiche a pressoflessione delle travi in muratura in combinazioni non sismiche

Sezione	γM	N	M	Mu	Comb.	c.s.	Verifica
ini.	3	-452	-515.49	799.08	SLU 83	1.55	Si
fin.	3	907	128.29	799.08	SLU 83	6.23	Si
ini.	3	-457	-517.84	799.08	SLU 84	1.54	Si
fin.	3	912	130.13	799.08	SLU 84	6.14	Si
ini.	3	-434	-495.51	799.08	SLU 76	1.61	Si
fin.	3	884	125.99	799.08	SLU 76	6.34	Si
ini.	3	-472	-524.25	799.08	SLU 80	1.52	Si
fin.	3	953	144.11	799.08	SLU 80	5.54	Si
ini.	3	-467	-521.91	799.08	SLU 79	1.53	Si
fin.	3	949	142.28	799.08	SLU 79	5.62	Si
ini.	3	-415	-487.52	799.08	SLU 82	1.64	Si
fin.	3	839	110.78	799.08	SLU 82	7.21	Si
ini.	3	-461	-523.86	799.08	SLU 77	1.53	Si
fin.	3	953	140.58	799.08	SLU 77	5.68	Si
ini.	3	-467	-526.2	799.08	SLU 78	1.52	Si
fin.	3	958	142.42	799.08	SLU 78	5.61	Si
ini.	3	-425	-495.89	799.08	SLU 75	1.61	Si
fin.	3	885	123.07	799.08	SLU 75	6.49	Si
ini.	3	-419	-493.54	799.08	SLU 74	1.62	Si
fin.	3	880	121.24	799.08	SLU 74	6.59	Si

Verifiche a taglio delle travi in muratura secondo §C8.7.1.3.1 in combinazioni non sismiche

Sezione	γM	N	M	V	Vt	Vp	Vt fess. diag.	Vt,lim	Comb.	c.s.	Verifica
ini.	3	-356	-435.78	2727			713	280	SLU 54	0.1	No
fin.	3	790	105	-937			607	0	SLU 54	0	No
ini.	3	-393	-463.75	2857			724	285	SLU 56	0.1	No
fin.	3	858	122.51	-905			607	0	SLU 56	0	No
ini.	3	-347	-427.42	2710			711	279	SLU 61	0.1	No
fin.	3	744	92.7	-1005			607	0	SLU 61	0	No
ini.	3	-404	-464.15	2851			728	287	SLU 59	0.1	No
fin.	3	858	126.04	-879			607	0	SLU 59	0	No
ini.	3	-399	-466.1	2866			726	286	SLU 57	0.1	No
fin.	3	863	124.34	-898			607	0	SLU 57	0	No
ini.	3	-341	-425.07	2701			709	278	SLU 60	0.1	No
fin.	3	739	90.87	-1012			607	0	SLU 60	0	No
ini.	3	-418	-453.98	2750			732	288	SLU 42	0.1	No
fin.	3	791	118.05	-870			607	0	SLU 42	0	No
ini.	3	-398	-461.8	2841			726	286	SLU 58	0.1	No
fin.	3	854	124.2	-886			607	0	SLU 58	0	No
ini.	3	-383	-455.38	2839			722	284	SLU 62	0.1	No
fin.	3	812	110.22	-972			607	0	SLU 62	0	No
ini.	3	-365	-435.4	2718			716	282	SLU 55	0.1	No
fin.	3	788	107.91	-914			607	0	SLU 55	0	No

Verifiche a pressoflessione delle travi in muratura in combinazioni sismiche

Sezione	γM	N	M	Mu	Comb.	c.s.	Verifica
ini.	2	-1277	-1209.59	1198.62	SLV 11	0.99	No
fin.	2	3108	456.79	1198.62	SLV 11	2.62	Si
ini.	2	-332	-712.98	1198.62	SLV 7	1.68	Si
fin.	2	1950	-5.3	1198.62	SLV 7	226.29	Si
ini.	2	-1277	-1209.59	1198.62	SLV 12	0.99	No
fin.	2	3108	456.79	1198.62	SLV 12	2.62	Si
ini.	2	-1990	-1336.34	1198.62	SLV 15	0.9	No
fin.	2	3081	886.62	1198.62	SLV 15	1.35	Si
ini.	2	-1656	-948.36	1198.62	SLV 13	1.26	Si
fin.	2	1900	792.97	1198.62	SLV 13	1.51	Si
ini.	2	-1656	-948.36	1198.62	SLV 14	1.26	Si
fin.	2	1900	792.97	1198.62	SLV 14	1.51	Si
ini.	2	-1990	-1336.34	1198.62	SLV 16	0.9	No
fin.	2	3081	886.62	1198.62	SLV 16	1.35	Si
ini.	2	-332	-712.98	1198.62	SLV 8	1.68	Si
fin.	2	1950	-5.3	1198.62	SLV 8	226.29	Si
ini.	2	1494	707.01	1198.62	SLV 2	1.7	Si
fin.	2	-1959	-747.32	1198.62	SLV 2	1.6	Si
ini.	2	1494	707.01	1198.62	SLV 1	1.7	Si
fin.	2	-1959	-747.32	1198.62	SLV 1	1.6	Si

Verifiche a taglio delle travi in muratura secondo §C8.7.1.3.1 in combinazioni sismiche

Sezione	γM	N	M	V	Vt	Vp	Vt fess. diag.	Vt,lim	Comb.	c.s.	Verifica
ini.	2	-1277	-1209.59	4720			1293	510	SLV 11	0.11	No
fin.	2	3108	456.79	-453			910	0	SLV 11	0	No
ini.	2	-332	-712.98	2911			1009	393	SLV 8	0.13	No
fin.	2	1950	-5.3	-2217			910	0	SLV 8	0	No
ini.	2	-1277	-1209.59	4720			1293	510	SLV 12	0.11	No
fin.	2	3108	456.79	-453			910	0	SLV 12	0	No

Sezione	γM	N	M	V	Vt	Vp	Vt fess. diag.	Vt,lim	Comb.	c.s.	Verifica
ini.	2	1494	707.01	-1561			910	0	SLV 1	0	No
fin.	2	-1959	-747.32	-3495			1498	580	SLV 1	0.17	No
ini.	2	1160	319.04	-472			910	0	SLV 3	0	No
fin.	2	-778	-653.66	-3855			1143	452	SLV 3	0.12	No
ini.	2	1494	707.01	-1561			910	0	SLV 2	0	No
fin.	2	-1959	-747.32	-3495			1498	580	SLV 2	0.17	No
ini.	2	-1656	-948.36	4471			1407	550	SLV 14	0.12	No
fin.	2	1900	792.97	2386			910	0	SLV 14	0	No
ini.	2	1160	319.04	-472			910	0	SLV 4	0	No
fin.	2	-778	-653.66	-3855			1143	452	SLV 4	0.12	No
ini.	2	-332	-712.98	2911			1009	393	SLV 7	0.13	No
fin.	2	1950	-5.3	-2217			910	0	SLV 7	0	No
ini.	2	-1656	-948.36	4471			1407	550	SLV 13	0.12	No
fin.	2	1900	792.97	2386			910	0	SLV 13	0	No

Tabella dei coefficienti di sicurezza minimi

Stato limite	Coeff.s.	Comb.	Verifica
PF_SLV	0.897	SLV 15	No
V_SLV	0	SLV 1	No
PF_SLU	1.519	SLU 78	Si
V_SLU	0	SLU 14	No

Trave di accoppiamento 104

Verifiche condotte secondo D.M. 17-01-18 (N.T.C.)

Dati geometrici

X ini.	Y ini.	Z ini.inf.	Z ini.sup.	H ini.	X fin.	Y fin.	Z fin.inf.	Z fin.sup	H fin.	Luce	Spessore	R. Trazione
-0.134	1.387	6.45	7.9	1.45	-0.134	2.187	6.45	7.9	1.45	0.8	0.28	30000

Caratteristiche del materiale

(Circolare 7 21-01-19 C8.5.I) Muratura in mattoni pieni e malta di calce LC2_Corti

fb_	fhk	fvk0	fhmedio	τ0	fv0	μ	ϕ	fvk,lim	E	G	FC
120000			172500	9000	20000	0.577	0.767	6500	320000000	128000000	1.2

Verifiche a pressoflessione delle travi in muratura in combinazioni non sismiche

Sezione	γM	N	M	Mu	Comb.	c.s.	Verifica
ini.	3	1199	466.49	2986.79	SLU 80	6.4	Si
fin.	3	635	-134.19	2986.79	SLU 80	22.26	Si
ini.	3	1310	495.63	2986.79	SLU 84	6.03	Si
fin.	3	658	-168.57	2986.79	SLU 84	17.72	Si
ini.	3	1230	468.3	2986.79	SLU 75	6.38	Si
fin.	3	657	-133.6	2986.79	SLU 75	22.36	Si
ini.	3	1219	473.35	2986.79	SLU 78	6.31	Si
fin.	3	636	-139.78	2986.79	SLU 78	21.37	Si
ini.	3	1309	495.63	2986.79	SLU 81	6.03	Si
fin.	3	625	-194.97	2986.79	SLU 81	15.32	Si
ini.	3	1218	473.36	2986.79	SLU 74	6.31	Si
fin.	3	602	-166.18	2986.79	SLU 74	17.97	Si
ini.	3	1321	490.58	2986.79	SLU 82	6.09	Si
fin.	3	679	-162.39	2986.79	SLU 82	18.39	Si
ini.	3	1298	500.69	2986.79	SLU 83	5.97	Si
fin.	3	604	-201.16	2986.79	SLU 83	14.85	Si
ini.	3	1187	471.55	2986.79	SLU 79	6.33	Si
fin.	3	580	-166.77	2986.79	SLU 79	17.91	Si
ini.	3	1207	478.41	2986.79	SLU 77	6.24	Si
fin.	3	582	-172.36	2986.79	SLU 77	17.33	Si

Verifiche a taglio delle travi in muratura secondo §C8.7.1.3.1 in combinazioni non sismiche

Sezione	γM	N	M	V	Vt	Vp	Vt fess. diag.	Vt,lim	Comb.	c.s.	Verifica
ini.	3	1218	473.36	2292			1564	186	SLU 74	0.08	No
fin.	3	602	-166.18	-3344			1564	438	SLU 74	0.13	No
ini.	3	1207	478.41	2355			1564	193	SLU 77	0.08	No
fin.	3	582	-172.36	-3407			1564	444	SLU 77	0.13	No
ini.	3	1309	495.63	2145			1564	106	SLU 81	0.05	No
fin.	3	625	-194.97	-3461			1564	432	SLU 81	0.12	No
ini.	3	1230	468.3	2344			1564	178	SLU 75	0.08	No
fin.	3	657	-133.6	-3242			1564	422	SLU 75	0.13	No
ini.	3	1298	500.69	2208			1564	119	SLU 83	0.05	No
fin.	3	604	-201.16	-3524			1564	438	SLU 83	0.12	No
ini.	3	1229	453.02	2305			1564	178	SLU 73	0.08	No
fin.	3	712	-100.1	-3057			1564	405	SLU 73	0.13	No
ini.	3	1321	490.58	2197			1564	91	SLU 82	0.04	No
fin.	3	679	-162.39	-3359			1564	415	SLU 82	0.12	No
ini.	3	1310	495.63	2260			1564	106	SLU 84	0.05	No
fin.	3	658	-168.57	-3423			1564	422	SLU 84	0.12	No
ini.	3	1219	473.35	2407			1564	185	SLU 78	0.08	No
fin.	3	636	-139.78	-3305			1564	428	SLU 78	0.13	No
ini.	3	1218	458.07	2367			1564	186	SLU 76	0.08	No
fin.	3	692	-106.28	-3121			1564	411	SLU 76	0.13	No

Verifiche a pressoflessione delle travi in muratura in combinazioni sismiche

Sezione	γM	N	M	Mu	Comb.	c.s.	Verifica
ini.	2	2765	1141.91	4480.18	SLV 11	3.92	Si
fin.	2	-301	-1605.17	4480.18	SLV 11	2.79	Si
ini.	2	1880	917.24	4480.18	SLV 8	4.88	Si
fin.	2	-589	-1355.04	4480.18	SLV 8	3.31	Si

Sezione	γM	N	M	Mu	Comb.	c.s.	Verifica
ini.	2	-333	-316.46	4480.18	SLV 9	14.16	Si
fin.	2	1535	1245.14	4480.18	SLV 9	3.6	Si
ini.	2	-333	-316.46	4480.18	SLV 10	14.16	Si
fin.	2	1535	1245.14	4480.18	SLV 10	3.6	Si
ini.	2	-1217	-541.12	4480.18	SLV 6	8.28	Si
fin.	2	1247	1495.27	4480.18	SLV 6	3	Si
ini.	2	2765	1141.91	4480.18	SLV 12	3.92	Si
fin.	2	-301	-1605.17	4480.18	SLV 12	2.79	Si
ini.	2	2713	893.59	4480.18	SLV 15	5.01	Si
fin.	2	678	-899.38	4480.18	SLV 15	4.98	Si
ini.	2	-1217	-541.12	4480.18	SLV 5	8.28	Si
fin.	2	1247	1495.27	4480.18	SLV 5	3	Si
ini.	2	2713	893.59	4480.18	SLV 16	5.01	Si
fin.	2	678	-899.38	4480.18	SLV 16	4.98	Si
ini.	2	1880	917.24	4480.18	SLV 7	4.88	Si
fin.	2	-589	-1355.04	4480.18	SLV 7	3.31	Si

Verifiche a taglio delle travi in muratura secondo §C8.7.1.3.1 in combinazioni sismiche

Sezione	γM	N	M	V	Vt	Vp	Vt fess. diag.	Vt,lim	Comb.	c.s.	Verifica
ini.	2	2713	893.59	282			2345	0	SLV 16	0	No
fin.	2	678	-899.38	-5291			2345	720	SLV 16	0.14	No
ini.	2	1880	917.24	-2743			2345	240	SLV 8	0.09	No
fin.	2	-589	-1355.04	-6574			2581	1003	SLV 8	0.15	No
ini.	2	-333	-316.46	6360			2478	952	SLV 9	0.15	No
fin.	2	1535	1245.14	2359			2345	436	SLV 9	0.18	No
ini.	2	1880	917.24	-2743			2345	240	SLV 7	0.09	No
fin.	2	-589	-1355.04	-6574			2581	1003	SLV 7	0.15	No
ini.	2	2765	1141.91	-2832			2345	0	SLV 12	0	No
fin.	2	-301	-1605.17	-7588			2466	946	SLV 12	0.12	No
ini.	2	2765	1141.91	-2832			2345	0	SLV 11	0	No
fin.	2	-301	-1605.17	-7588			2466	946	SLV 11	0.12	No
ini.	2	2713	893.59	282			2345	0	SLV 15	0	No
fin.	2	678	-899.38	-5291			2345	720	SLV 15	0.14	No
ini.	2	1784	456.08	3039			2345	307	SLV 14	0.1	No
fin.	2	1229	-44.28	-2307			2345	554	SLV 14	0.24	No
ini.	2	1784	456.08	3039			2345	307	SLV 13	0.1	No
fin.	2	1229	-44.28	-2307			2345	554	SLV 13	0.24	No
ini.	2	-333	-316.46	6360			2478	952	SLV 10	0.15	No
fin.	2	1535	1245.14	2359			2345	436	SLV 10	0.18	No

Tabella dei coefficienti di sicurezza minimi

Stato limite	Coeff.s.	Comb.	Verifica
PF_SLV	2.791	SLV 11	Si
V_SLV	0	SLV 11	No
PF_SLU	5.965	SLU 83	Si
V_SLU	0.042	SLU 82	No

Trave di accoppiamento 105

Verifiche condotte secondo D.M. 17-01-18 (N.T.C.)

Dati geometrici

X ini.	Y ini.	Z ini.inf.	Z ini.sup.	H ini.	X fin.	Y fin.	Z fin.inf.	Z fin.sup	H fin.	Luce	Spessore	R. Trazione
-21.849	5.798	7.9	8.8	0.9	-22.849	5.798	7.9	8.8	0.9	1	0.28	30000

Caratteristiche del materiale

(Circolare 7 21-01-19 C8.5.I) Muratura in mattoni pieni e malta di calce LC2_Corti

fb_	fhk	fvk0	fhmedio	τ0	fv0	μ	ϕ	fvk,lim	E	G	FC
120000			172500	9000	20000	0.577	0.767	6500	320000000	128000000	1.2

Verifiche a pressoflessione delle travi in muratura in combinazioni non sismiche

Sezione	γM	N	M	Mu	Comb.	c.s.	Verifica
ini.	3	-758	516.69	1150.68	SLU 79	2.23	Si
fin.	3	603	-450.19	1150.68	SLU 79	2.56	Si
ini.	3	-753	518.67	1150.68	SLU 78	2.22	Si
fin.	3	612	-452.8	1150.68	SLU 78	2.54	Si
ini.	3	-719	479.96	1150.68	SLU 72	2.4	Si
fin.	3	538	-409.67	1150.68	SLU 72	2.81	Si
ini.	3	-706	478.04	1150.68	SLU 70	2.41	Si
fin.	3	545	-408.42	1150.68	SLU 70	2.82	Si
ini.	3	-767	520.59	1150.68	SLU 80	2.21	Si
fin.	3	605	-454.04	1150.68	SLU 80	2.53	Si
ini.	3	-710	476.06	1150.68	SLU 71	2.42	Si
fin.	3	535	-405.81	1150.68	SLU 71	2.84	Si
ini.	3	-703	477.06	1150.68	SLU 76	2.41	Si
fin.	3	541	-414.99	1150.68	SLU 76	2.77	Si
ini.	3	-744	514.77	1150.68	SLU 77	2.24	Si
fin.	3	610	-448.94	1150.68	SLU 77	2.56	Si
ini.	3	-709	487.97	1150.68	SLU 83	2.36	Si
fin.	3	566	-427.58	1150.68	SLU 83	2.69	Si
ini.	3	-718	491.87	1150.68	SLU 84	2.34	Si
fin.	3	568	-431.44	1150.68	SLU 84	2.67	Si

Verifiche a taglio delle travi in muratura secondo §C8.7.1.3.1 in combinazioni non sismiche

Sezione	γM	N	M	V	Vt	Vp	Vt fess. diag.	Vt,lim	Comb.	c.s.	Verifica
ini.	3	-709	487.97	-1981			1129	446	SLU 83	0.23	No
fin.	3	566	-427.58	-1146			873	188	SLU 83	0.16	No

Sezione	γM	N	M	V	Vt	Vp	Vt fess. diag.	Vt,lim	Comb.	c.s.	Verifica
ini.	3	-718	491.87	-1992			1132	448	SLU 84	0.22	No
fin.	3	568	-431.44	-1161			873	187	SLU 84	0.16	No
ini.	3	-659	454.28	-1830			1111	439	SLU 37	0.24	No
fin.	3	549	-402.13	-1088			873	193	SLU 37	0.18	No
ini.	3	-655	456.26	-1850			1109	439	SLU 36	0.24	No
fin.	3	558	-404.73	-1083			873	190	SLU 36	0.18	No
ini.	3	-767	520.59	-2122			1149	455	SLU 80	0.21	No
fin.	3	605	-454.04	-1209			873	174	SLU 80	0.14	No
ini.	3	-703	477.06	-1945			1127	446	SLU 76	0.23	No
fin.	3	541	-414.99	-1105			873	196	SLU 76	0.18	No
ini.	3	-753	518.67	-2130			1145	453	SLU 78	0.21	No
fin.	3	612	-452.8	-1190			873	171	SLU 78	0.14	No
ini.	3	-744	514.77	-2120			1141	451	SLU 77	0.21	No
fin.	3	610	-448.94	-1175			873	172	SLU 77	0.15	No
ini.	3	-668	458.18	-1841			1114	440	SLU 38	0.24	No
fin.	3	551	-405.98	-1102			873	193	SLU 38	0.17	No
ini.	3	-758	516.69	-2111			1146	453	SLU 79	0.21	No
fin.	3	603	-450.19	-1194			873	175	SLU 79	0.15	No

Verifiche a pressoflessione delle travi in muratura in combinazioni sismiche

Sezione	γM	N	M	Mu	Comb.	c.s.	Verifica
ini.	2	-2083	1330.36	1726.01	SLV 4	1.3	Si
fin.	2	2179	-1316.14	1726.01	SLV 4	1.31	Si
ini.	2	-2083	1330.36	1726.01	SLV 3	1.3	Si
fin.	2	2179	-1316.14	1726.01	SLV 3	1.31	Si
ini.	2	874	-556.33	1726.01	SLV 10	3.1	Si
fin.	2	-1622	735.81	1726.01	SLV 10	2.35	Si
ini.	2	874	-556.33	1726.01	SLV 9	3.1	Si
fin.	2	-1622	735.81	1726.01	SLV 9	2.35	Si
ini.	2	1207	-739.93	1726.01	SLV 13	2.33	Si
fin.	2	-1552	817.98	1726.01	SLV 13	2.11	Si
ini.	2	1207	-739.93	1726.01	SLV 14	2.33	Si
fin.	2	-1552	817.98	1726.01	SLV 14	2.11	Si
ini.	2	-1543	973.66	1726.01	SLV 1	1.77	Si
fin.	2	1272	-877.83	1726.01	SLV 1	1.97	Si
ini.	2	-1543	973.66	1726.01	SLV 2	1.77	Si
fin.	2	1272	-877.83	1726.01	SLV 2	1.97	Si
ini.	2	-1750	1146.76	1726.01	SLV 7	1.51	Si
fin.	2	2249	-1233.97	1726.01	SLV 7	1.4	Si
ini.	2	-1750	1146.76	1726.01	SLV 8	1.51	Si
fin.	2	2249	-1233.97	1726.01	SLV 8	1.4	Si

Verifiche a taglio delle travi in muratura secondo §C8.7.1.3.1 in combinazioni sismiche

Sezione	γM	N	M	V	Vt	Vp	Vt fess. diag.	Vt,lim	Comb.	c.s.	Verifica
ini.	2	-925	632.69	-1913			1643	649	SLV 11	0.34	No
fin.	2	1402	-725.23	565			1310	0	SLV 11	0	No
ini.	2	1207	-739.93	2259			1310	101	SLV 14	0.04	No
fin.	2	-1552	817.98	2180			1869	737	SLV 14	0.34	No
ini.	2	-1750	1146.76	-3727			1940	762	SLV 7	0.2	No
fin.	2	2249	-1233.97	-1182			1310	0	SLV 7	0	No
ini.	2	-2083	1330.36	-4737			2060	803	SLV 4	0.17	No
fin.	2	2179	-1316.14	-3448			1310	0	SLV 4	0	No
ini.	2	1207	-739.93	2259			1310	101	SLV 13	0.04	No
fin.	2	-1552	817.98	2180			1869	737	SLV 13	0.34	No
ini.	2	-1543	973.66	-3789			1866	735	SLV 2	0.19	No
fin.	2	1272	-877.83	-3643			1310	0	SLV 2	0	No
ini.	2	-2083	1330.36	-4737			2060	803	SLV 3	0.17	No
fin.	2	2179	-1316.14	-3448			1310	0	SLV 3	0	No
ini.	2	-925	632.69	-1913			1643	649	SLV 12	0.34	No
fin.	2	1402	-725.23	565			1310	0	SLV 12	0	No
ini.	2	-1750	1146.76	-3727			1940	762	SLV 8	0.2	No
fin.	2	2249	-1233.97	-1182			1310	0	SLV 8	0	No
ini.	2	-1543	973.66	-3789			1866	735	SLV 1	0.19	No
fin.	2	1272	-877.83	-3643			1310	0	SLV 1	0	No

Tabella dei coefficienti di sicurezza minimi

Stato limite	Coeff.s.	Comb.	Verifica
PF_SLV	1.297	SLV 3	Si
V_SLV	0	SLV 1	No
PF_SLU	2.21	SLU 80	Si
V_SLU	0.144	SLU 80	No

Trave di accoppiamento 106

Verifiche condotte secondo D.M. 17-01-18 (N.T.C.)

Dati geometrici

X ini.	Y ini.	Z ini.inf.	Z ini.sup.	H ini.	X fin.	Y fin.	Z fin.inf.	Z fin.sup	H fin.	Luce	Spessore	R. Trazione
-21.849	5.798	10.7	11.45	0.75	-22.849	5.798	10.7	11.45	0.75	1	0.28	30000

Caratteristiche del materiale

(Circolare 7 21-01-19 C8.5.I) Muratura in mattoni pieni e malta di calce LC2_Corti

fb_	fhk	fvk0	fhmedio	τ0	fv0	μ	ϕ	fvk,lim	E	G	FC
120000			172500	9000	20000	0.577	0.767	6500	320000000	128000000	1.2

Verifiche a pressoflessione delle travi in muratura in combinazioni non sismiche

Sezione	γM	N	M	Mu	Comb.	c.s.	Verifica
ini.	3	660	329.99	799.08	SLU 79	2.42	Si
fin.	3	-888	-509.09	799.08	SLU 79	1.57	Si
ini.	3	621	305.38	799.08	SLU 76	2.62	Si
fin.	3	-833	-478.76	799.08	SLU 76	1.67	Si
ini.	3	685	329.37	799.08	SLU 77	2.43	Si
fin.	3	-864	-510.36	799.08	SLU 77	1.57	Si
ini.	3	630	298.1	799.08	SLU 74	2.68	Si
fin.	3	-796	-473.75	799.08	SLU 74	1.69	Si
ini.	3	669	306.33	799.08	SLU 70	2.61	Si
fin.	3	-751	-463.54	799.08	SLU 70	1.72	Si
ini.	3	695	333.36	799.08	SLU 78	2.4	Si
fin.	3	-872	-514.14	799.08	SLU 78	1.55	Si
ini.	3	640	302.1	799.08	SLU 75	2.65	Si
fin.	3	-803	-477.52	799.08	SLU 75	1.67	Si
ini.	3	625	314.31	799.08	SLU 84	2.54	Si
fin.	3	-879	-497.93	799.08	SLU 84	1.6	Si
ini.	3	669	333.98	799.08	SLU 80	2.39	Si
fin.	3	-896	-512.86	799.08	SLU 80	1.56	Si
ini.	3	616	310.31	799.08	SLU 83	2.58	Si
fin.	3	-872	-494.16	799.08	SLU 83	1.62	Si

Verifiche a taglio delle travi in muratura secondo §C8.7.1.3.1 in combinazioni non sismiche

Sezione	γM	N	M	V	Vt	Vp	Vt fess. diag.	Vt,lim	Comb.	c.s.	Verifica
ini.	3	625	314.31	-250			607	75	SLU 84	0.3	No
fin.	3	-879	-497.93	-2533			870	343	SLU 84	0.14	No
ini.	3	616	310.31	-233			607	79	SLU 83	0.34	No
fin.	3	-872	-494.16	-2523			868	342	SLU 83	0.14	No
ini.	3	695	333.36	-309			607	19	SLU 78	0.06	No
fin.	3	-872	-514.14	-2593			868	342	SLU 78	0.13	No
ini.	3	685	329.37	-292			607	33	SLU 77	0.11	No
fin.	3	-864	-510.36	-2582			866	341	SLU 77	0.13	No
ini.	3	669	306.33	-297			607	48	SLU 70	0.16	No
fin.	3	-751	-463.54	-2345			832	329	SLU 70	0.14	No
ini.	3	660	329.99	-309			607	55	SLU 79	0.18	No
fin.	3	-888	-509.09	-2564			873	344	SLU 79	0.13	No
ini.	3	669	333.98	-327			607	48	SLU 80	0.15	No
fin.	3	-896	-512.86	-2575			875	345	SLU 80	0.13	No
ini.	3	621	305.38	-257			607	77	SLU 76	0.3	No
fin.	3	-833	-478.76	-2435			856	338	SLU 76	0.14	No
ini.	3	640	302.1	-228			607	67	SLU 75	0.29	No
fin.	3	-803	-477.52	-2445			848	335	SLU 75	0.14	No
ini.	3	630	298.1	-210			607	72	SLU 74	0.34	No
fin.	3	-796	-473.75	-2434			845	334	SLU 74	0.14	No

Verifiche a pressoflessione delle travi in muratura in combinazioni sismiche

Sezione	γM	N	M	Mu	Comb.	c.s.	Verifica
ini.	2	1488	841.23	1198.62	SLV 3	1.42	Si
fin.	2	-1597	-944.73	1198.62	SLV 3	1.27	Si
ini.	2	425	460.48	1198.62	SLV 11	2.6	Si
fin.	2	-1037	-612.05	1198.62	SLV 11	1.96	Si
ini.	2	-691	-471.56	1198.62	SLV 14	2.54	Si
fin.	2	611	348.47	1198.62	SLV 14	3.44	Si
ini.	2	1020	776.27	1198.62	SLV 8	1.54	Si
fin.	2	-1555	-916.14	1198.62	SLV 8	1.31	Si
ini.	2	1020	776.27	1198.62	SLV 7	1.54	Si
fin.	2	-1555	-916.14	1198.62	SLV 7	1.31	Si
ini.	2	1294	581.11	1198.62	SLV 2	2.06	Si
fin.	2	-1115	-665.15	1198.62	SLV 2	1.8	Si
ini.	2	1294	581.11	1198.62	SLV 1	2.06	Si
fin.	2	-1115	-665.15	1198.62	SLV 1	1.8	Si
ini.	2	1488	841.23	1198.62	SLV 4	1.42	Si
fin.	2	-1597	-944.73	1198.62	SLV 4	1.27	Si
ini.	2	425	460.48	1198.62	SLV 12	2.6	Si
fin.	2	-1037	-612.05	1198.62	SLV 12	1.96	Si
ini.	2	-691	-471.56	1198.62	SLV 13	2.54	Si
fin.	2	611	348.47	1198.62	SLV 13	3.44	Si

Verifiche a taglio delle travi in muratura secondo §C8.7.1.3.1 in combinazioni sismiche

Sezione	γM	N	M	V	Vt	Vp	Vt fess. diag.	Vt,lim	Comb.	c.s.	Verifica
ini.	2	-497	-211.43	1677			1059	416	SLV 16	0.25	No
fin.	2	129	68.89	-371			910	321	SLV 16	0.86	No
ini.	2	1294	581.11	-1871			910	0	SLV 1	0	No
fin.	2	-1115	-665.15	-2760			1244	492	SLV 1	0.18	No
ini.	2	425	460.48	826			910	264	SLV 11	0.32	No
fin.	2	-1037	-612.05	-2627			1221	483	SLV 11	0.18	No
ini.	2	1294	581.11	-1871			910	0	SLV 2	0	No
fin.	2	-1115	-665.15	-2760			1244	492	SLV 2	0.18	No
ini.	2	1020	776.27	-162			910	57	SLV 8	0.36	No
fin.	2	-1555	-916.14	-3624			1376	539	SLV 8	0.15	No
ini.	2	1020	776.27	-162			910	57	SLV 7	0.36	No
fin.	2	-1555	-916.14	-3624			1376	539	SLV 7	0.15	No
ini.	2	1488	841.23	-1614			910	0	SLV 3	0	No
fin.	2	-1597	-944.73	-3696			1389	544	SLV 3	0.15	No
ini.	2	1488	841.23	-1614			910	0	SLV 4	0	No
fin.	2	-1597	-944.73	-3696			1389	544	SLV 4	0.15	No
ini.	2	425	460.48	826			910	264	SLV 12	0.32	No
fin.	2	-1037	-612.05	-2627			1221	483	SLV 12	0.18	No
ini.	2	-497	-211.43	1677			1059	416	SLV 15	0.25	No
fin.	2	129	68.89	-371			910	321	SLV 15	0.86	No

Tabella dei coefficienti di sicurezza minimi

Stato limite	Coeff.s.	Comb.	Verifica
PF_SLV	1.269	SLV 3	Si
V_SLV	0	SLV 1	No
PF_SLU	1.554	SLU 78	Si
V_SLU	0.063	SLU 78	No

Trave di accoppiamento 107

Verifiche condotte secondo D.M. 17-01-18 (N.T.C.)

Dati geometrici

X ini.	Y ini.	Z ini.inf.	Z ini.sup.	H ini.	X fin.	Y fin.	Z fin.inf.	Z fin.sup	H fin.	Luce	Spessore	R. Trazione
-21.608	-3.254	7.9	8.8	0.9	-22.608	-3.254	7.9	8.8	0.9	1	0.28	30000

Caratteristiche del materiale

(Circolare 7 21-01-19 C8.5.I) Muratura in mattoni pieni e malta di calce LC2_Corti

fb_	fhk	fvk0	fhmedio	τ0	fv0	μ	ϕ	fvk,lim	E	G	FC
120000			172500	9000	20000	0.577	0.767	6500	320000000	128000000	1.2

Verifiche a pressoflessione delle travi in muratura in combinazioni non sismiche

Sezione	γM	N	M	Mu	Comb.	c.s.	Verifica
ini.	3	-941	461.48	1150.68	SLU 80	2.49	Si
fin.	3	322	-306.57	1150.68	SLU 80	3.75	Si
ini.	3	-906	431.31	1150.68	SLU 82	2.67	Si
fin.	3	280	-285.34	1150.68	SLU 82	4.03	Si
ini.	3	-1150	470.12	1150.68	SLU 79	2.45	Si
fin.	3	120	-294.41	1150.68	SLU 79	3.91	Si
ini.	3	-944	456.96	1150.68	SLU 84	2.52	Si
fin.	3	313	-305.37	1150.68	SLU 84	3.77	Si
ini.	3	-1115	439.94	1150.68	SLU 81	2.62	Si
fin.	3	78	-273.17	1150.68	SLU 81	4.21	Si
ini.	3	-1152	465.59	1150.68	SLU 83	2.47	Si
fin.	3	111	-293.2	1150.68	SLU 83	3.92	Si
ini.	3	-896	438.58	1150.68	SLU 75	2.62	Si
fin.	3	305	-290.09	1150.68	SLU 75	3.97	Si
ini.	3	-1104	447.21	1150.68	SLU 74	2.57	Si
fin.	3	102	-277.92	1150.68	SLU 74	4.14	Si
ini.	3	-1142	472.86	1150.68	SLU 77	2.43	Si
fin.	3	135	-297.95	1150.68	SLU 77	3.86	Si
ini.	3	-933	464.23	1150.68	SLU 78	2.48	Si
fin.	3	338	-310.12	1150.68	SLU 78	3.71	Si

Verifiche a taglio delle travi in muratura secondo §C8.7.1.3.1 in combinazioni non sismiche

Sezione	γM	N	M	V	Vt	Vp	Vt fess. diag.	Vt,lim	Comb.	c.s.	Verifica
ini.	3	-944	456.96	-1811			1213	479	SLU 84	0.26	No
fin.	3	313	-305.37	-759			873	260	SLU 84	0.34	No
ini.	3	-765	430.08	-1752			1149	454	SLU 76	0.26	No
fin.	3	423	-294.65	-683			873	231	SLU 76	0.34	No
ini.	3	-1150	470.12	-1834			1287	506	SLU 79	0.28	No
fin.	3	120	-294.41	-742			873	304	SLU 79	0.41	No
ini.	3	-835	411.97	-1690			1174	464	SLU 57	0.27	No
fin.	3	281	-265.97	-581			873	268	SLU 57	0.46	No
ini.	3	-840	414.94	-1715			1176	465	SLU 70	0.27	No
fin.	3	281	-266.18	-564			873	268	SLU 70	0.48	No
ini.	3	-896	438.58	-1768			1196	472	SLU 75	0.27	No
fin.	3	305	-290.09	-683			873	262	SLU 75	0.38	No
ini.	3	-727	404.43	-1643			1135	449	SLU 73	0.27	No
fin.	3	390	-274.62	-640			873	241	SLU 73	0.38	No
ini.	3	-933	464.23	-1878			1209	478	SLU 78	0.25	No
fin.	3	338	-310.12	-725			873	254	SLU 78	0.35	No
ini.	3	-941	461.48	-1851			1212	479	SLU 80	0.26	No
fin.	3	322	-306.57	-732			873	258	SLU 80	0.35	No
ini.	3	-1142	472.86	-1861			1284	505	SLU 77	0.27	No
fin.	3	135	-297.95	-735			873	301	SLU 77	0.41	No

Verifiche a pressoflessione delle travi in muratura in combinazioni sismiche

Sezione	γM	N	M	Mu	Comb.	c.s.	Verifica
ini.	2	-269	646.44	1726.01	SLV 5	2.67	Si
fin.	2	1249	-723.84	1726.01	SLV 5	2.38	Si
ini.	2	-2959	1567.3	1726.01	SLV 1	1.1	Si
fin.	2	1929	-1471.57	1726.01	SLV 1	1.17	Si
ini.	2	-269	646.44	1726.01	SLV 6	2.67	Si
fin.	2	1249	-723.84	1726.01	SLV 6	2.38	Si
ini.	2	-3717	1583.49	1726.01	SLV 4	1.09	Si
fin.	2	1488	-1361.41	1726.01	SLV 4	1.27	Si
ini.	2	1439	-993.6	1726.01	SLV 15	1.74	Si
fin.	2	-1928	1142.19	1726.01	SLV 15	1.51	Si
ini.	2	-2959	1567.3	1726.01	SLV 2	1.1	Si
fin.	2	1929	-1471.57	1726.01	SLV 2	1.17	Si
ini.	2	-3717	1583.49	1726.01	SLV 3	1.09	Si
fin.	2	1488	-1361.41	1726.01	SLV 3	1.27	Si
ini.	2	2198	-1009.79	1726.01	SLV 14	1.71	Si
fin.	2	-1486	1032.02	1726.01	SLV 14	1.67	Si
ini.	2	2198	-1009.79	1726.01	SLV 13	1.71	Si
fin.	2	-1486	1032.02	1726.01	SLV 13	1.67	Si
ini.	2	1439	-993.6	1726.01	SLV 16	1.74	Si

Sezione	γM	N	M	Mu	Comb.	c.s.	Verifica
fin.	2	-1928	1142.19	1726.01	SLV 16	1.51	Si

Verifiche a taglio delle travi in muratura secondo §C8.7.1.3.1 in combinazioni sismiche

Sezione	γM	N	M	V	Vt	Vp	Vt fess. diag.	Vt,lim	Comb.	c.s.	Verifica
ini.	2	1439	-993.6	3989			1310	0	SLV 15	0	No
fin.	2	-1928	1142.19	3713			2004	784	SLV 15	0.21	No
ini.	2	1278	-126.69	-596			1310	0	SLV 10	0	No
fin.	2	225	27.24	881			1310	447	SLV 10	0.51	No
ini.	2	-2959	1567.3	-6234			2375	902	SLV 1	0.14	No
fin.	2	1929	-1471.57	-4504			1310	0	SLV 1	0	No
ini.	2	1278	-126.69	-596			1310	0	SLV 9	0	No
fin.	2	225	27.24	881			1310	447	SLV 9	0.51	No
ini.	2	2198	-1009.79	3435			1310	0	SLV 13	0	No
fin.	2	-1486	1032.02	3738			1845	728	SLV 13	0.19	No
ini.	2	-3717	1583.49	-5680			2648	980	SLV 4	0.17	No
fin.	2	1488	-1361.41	-4529			1310	0	SLV 4	0	No
ini.	2	-3717	1583.49	-5680			2648	980	SLV 3	0.17	No
fin.	2	1488	-1361.41	-4529			1310	0	SLV 3	0	No
ini.	2	-2959	1567.3	-6234			2375	902	SLV 2	0.14	No
fin.	2	1929	-1471.57	-4504			1310	0	SLV 2	0	No
ini.	2	2198	-1009.79	3435			1310	0	SLV 14	0	No
fin.	2	-1486	1032.02	3738			1845	728	SLV 14	0.19	No
ini.	2	1439	-993.6	3989			1310	0	SLV 16	0	No
fin.	2	-1928	1142.19	3713			2004	784	SLV 16	0.21	No

Tabella dei coefficienti di sicurezza minimi

Stato limite	Coeff.s.	Comb.	Verifica
PF_SLV	1.09	SLV 3	Si
V_SLV	0	SLV 1	No
PF_SLU	2.433	SLU 77	Si
V_SLU	0.254	SLU 78	No

Trave di accoppiamento 108

Verifiche condotte secondo D.M. 17-01-18 (N.T.C.)

Dati geometrici

X ini.	Y ini.	Z ini.inf.	Z ini.sup.	H ini.	X fin.	Y fin.	Z fin.inf.	Z fin.sup	H fin.	Luce	Spessore	R. Trazione
-21.608	-3.254	10.7	11.45	0.75	-22.608	-3.254	10.7	11.45	0.75	1	0.28	30000

Caratteristiche del materiale

(Circolare 7 21-01-19 C8.5.I) Muratura in mattoni pieni e malta di calce LC2_Corti

fb_	fhk	fvk0	fhmedio	τ0	fv0	μ	ϕ	fvk,lim	E	G	FC
120000			172500	9000	20000	0.577	0.767	6500	320000000	128000000	1.2

Verifiche a pressoflessione delle travi in muratura in combinazioni non sismiche

Sezione	γM	N	M	Mu	Comb.	c.s.	Verifica
ini.	3	190	178.06	799.08	SLU 79	4.49	Si
fin.	3	-997	-433.69	799.08	SLU 79	1.84	Si
ini.	3	208	179.46	799.08	SLU 77	4.45	Si
fin.	3	-985	-437.01	799.08	SLU 77	1.83	Si
ini.	3	155	160.39	799.08	SLU 74	4.98	Si
fin.	3	-942	-409.93	799.08	SLU 74	1.95	Si
ini.	3	255	195.46	799.08	SLU 80	4.09	Si
fin.	3	-962	-430.42	799.08	SLU 80	1.86	Si
ini.	3	81	150.12	799.08	SLU 81	5.32	Si
fin.	3	-977	-402.4	799.08	SLU 81	1.99	Si
ini.	3	219	177.79	799.08	SLU 75	4.49	Si
fin.	3	-906	-406.65	799.08	SLU 75	1.97	Si
ini.	3	199	186.58	799.08	SLU 84	4.28	Si
fin.	3	-986	-426.2	799.08	SLU 84	1.87	Si
ini.	3	272	196.86	799.08	SLU 78	4.06	Si
fin.	3	-950	-433.73	799.08	SLU 78	1.84	Si
ini.	3	245	188	799.08	SLU 76	4.25	Si
fin.	3	-895	-401.15	799.08	SLU 76	1.99	Si
ini.	3	134	169.18	799.08	SLU 83	4.72	Si
fin.	3	-1021	-429.48	799.08	SLU 83	1.86	Si

Verifiche a taglio delle travi in muratura secondo §C8.7.1.3.1 in combinazioni non sismiche

Sezione	γM	N	M	V	Vt	Vp	Vt fess. diag.	Vt,lim	Comb.	c.s.	Verifica
ini.	3	219	177.79	270			607	189	SLU 75	0.7	No
fin.	3	-906	-406.65	-2372			878	346	SLU 75	0.15	No
ini.	3	278	173.08	225			607	177	SLU 70	0.79	No
fin.	3	-793	-380.38	-2215			844	333	SLU 70	0.15	No
ini.	3	272	196.86	216			607	178	SLU 78	0.83	No
fin.	3	-950	-433.73	-2485			891	350	SLU 78	0.14	No
ini.	3	146	167.52	305			607	203	SLU 82	0.67	No
fin.	3	-942	-399.12	-2344			889	350	SLU 82	0.15	No
ini.	3	208	179.46	181			607	191	SLU 77	1.06	Si
fin.	3	-985	-437.01	-2396			902	354	SLU 77	0.15	No
ini.	3	255	195.46	200			607	182	SLU 80	0.91	No
fin.	3	-962	-430.42	-2454			895	352	SLU 80	0.14	No
ini.	3	192	168.93	332			607	195	SLU 73	0.59	No
fin.	3	-852	-374.07	-2287			862	340	SLU 73	0.15	No
ini.	3	199	186.58	251			607	193	SLU 84	0.77	No
fin.	3	-986	-426.2	-2457			902	354	SLU 84	0.14	No
ini.	3	245	188	278			607	184	SLU 76	0.66	No

Sezione	γM	N	M	V	Vt	Vp	Vt fess. diag.	Vt,lim	Comb.	c.s.	Verifica
fin.	3	-895	-401.15	-2400			875	345	SLU 76	0.14	No
ini.	3	190	178.06	165			607	195	SLU 79	1.18	Si
fin.	3	-997	-433.69	-2366			906	355	SLU 79	0.15	No

Verifiche a pressoflessione delle travi in muratura in combinazioni sismiche

Sezione	γM	N	M	Mu	Comb.	c.s.	Verifica
ini.	2	-1467	-857.94	1198.62	SLV 16	1.4	Si
fin.	2	920	708.4	1198.62	SLV 16	1.69	Si
ini.	2	1596	1038.7	1198.62	SLV 2	1.15	Si
fin.	2	-2106	-1216.67	1198.62	SLV 2	0.99	No
ini.	2	1339	993.39	1198.62	SLV 3	1.21	Si
fin.	2	-2562	-1264.07	1198.62	SLV 3	0.95	No
ini.	2	-1467	-857.94	1198.62	SLV 15	1.4	Si
fin.	2	920	708.4	1198.62	SLV 15	1.69	Si
ini.	2	56	292.57	1198.62	SLV 7	4.1	Si
fin.	2	-1876	-629	1198.62	SLV 7	1.91	Si
ini.	2	-1210	-812.63	1198.62	SLV 14	1.47	Si
fin.	2	1377	755.8	1198.62	SLV 14	1.59	Si
ini.	2	1596	1038.7	1198.62	SLV 1	1.15	Si
fin.	2	-2106	-1216.67	1198.62	SLV 1	0.99	No
ini.	2	1339	993.39	1198.62	SLV 4	1.21	Si
fin.	2	-2562	-1264.07	1198.62	SLV 4	0.95	No
ini.	2	56	292.57	1198.62	SLV 8	4.1	Si
fin.	2	-1876	-629	1198.62	SLV 8	1.91	Si
ini.	2	-1210	-812.63	1198.62	SLV 13	1.47	Si
fin.	2	1377	755.8	1198.62	SLV 13	1.59	Si

Verifiche a taglio delle travi in muratura secondo §C8.7.1.3.1 in combinazioni sismiche

Sezione	γM	N	M	V	Vt	Vp	Vt fess. diag.	Vt,lim	Comb.	c.s.	Verifica
ini.	2	1339	993.39	-2882			910	0	SLV 4	0	No
fin.	2	-2562	-1264.07	-4218			1679	635	SLV 4	0.15	No
ini.	2	1596	1038.7	-2769			910	0	SLV 2	0	No
fin.	2	-2106	-1216.67	-4941			1542	594	SLV 2	0.12	No
ini.	2	914	443.59	-505			910	123	SLV 6	0.24	No
fin.	2	-354	-471.01	-3599			1016	396	SLV 6	0.11	No
ini.	2	1339	993.39	-2882			910	0	SLV 3	0	No
fin.	2	-2562	-1264.07	-4218			1679	635	SLV 3	0.15	No
ini.	2	-1210	-812.63	3321			1273	502	SLV 14	0.15	No
fin.	2	1377	755.8	1306			910	0	SLV 14	0	No
ini.	2	-1210	-812.63	3321			1273	502	SLV 13	0.15	No
fin.	2	1377	755.8	1306			910	0	SLV 13	0	No
ini.	2	-1467	-857.94	3208			1350	530	SLV 16	0.17	No
fin.	2	920	708.4	2029			910	120	SLV 16	0.06	No
ini.	2	914	443.59	-505			910	123	SLV 5	0.24	No
fin.	2	-354	-471.01	-3599			1016	396	SLV 5	0.11	No
ini.	2	-1467	-857.94	3208			1350	530	SLV 15	0.17	No
fin.	2	920	708.4	2029			910	120	SLV 15	0.06	No
ini.	2	1596	1038.7	-2769			910	0	SLV 1	0	No
fin.	2	-2106	-1216.67	-4941			1542	594	SLV 1	0.12	No

Tabella dei coefficienti di sicurezza minimi

Stato limite	Coeff.s.	Comb.	Verifica
PF_SLV	0.948	SLV 3	No
V_SLV	0	SLV 1	No
PF_SLU	1.829	SLU 77	Si
V_SLU	0.141	SLU 78	No

Trave di accoppiamento 109

Verifiche condotte secondo D.M. 17-01-18 (N.T.C.)

Dati geometrici

X ini.	Y ini.	Z ini.inf.	Z ini.sup.	H ini.	X fin.	Y fin.	Z fin.inf.	Z fin.sup	H fin.	Luce	Spessore	R. Trazione
-18.803	-3.254	7.9	9.9	2	-19.303	-3.254	7.9	9.9	2	0.5	0.28	30000

Caratteristiche del materiale

(Circolare 7 21-01-19 C8.5.I) Muratura in mattoni pieni e malta di calce LC2_Corti

fb_	fhk	fvk0	fhmedio	τ0	fv0	μ	ϕ	fvk,lim	E	G	FC
120000			172500	9000	20000	0.577	0.767	6500	320000000	128000000	1.2

Verifiche a pressoflessione delle travi in muratura in combinazioni non sismiche

Sezione	γM	N	M	Mu	Comb.	c.s.	Verifica
ini.	3	-251	513.93	5682.35	SLU 83	11.06	Si
fin.	3	-787	611.08	5682.35	SLU 83	9.3	Si
ini.	3	-312	469.6	5682.35	SLU 80	12.1	Si
fin.	3	-656	585.95	5682.35	SLU 80	9.7	Si
ini.	3	-308	471.74	5682.35	SLU 84	12.05	Si
fin.	3	-696	617.25	5682.35	SLU 84	9.21	Si
ini.	3	-282	487.58	5682.35	SLU 74	11.65	Si
fin.	3	-787	591.67	5682.35	SLU 74	9.6	Si
ini.	3	-374	413.58	5682.35	SLU 76	13.74	Si
fin.	3	-624	587.15	5682.35	SLU 76	9.68	Si
ini.	3	-339	445.39	5682.35	SLU 75	12.76	Si
fin.	3	-697	597.84	5682.35	SLU 75	9.5	Si
ini.	3	-257	515.48	5682.35	SLU 77	11.02	Si
fin.	3	-759	594.59	5682.35	SLU 77	9.56	Si
ini.	3	-314	473.29	5682.35	SLU 78	12.01	Si

Sezione	γM	N	M	Mu	Comb.	c.s.	Verifica
fin.	3	-668	600.76	5682.35	SLU 78	9.46	Si
ini.	3	-276	486.03	5682.35	SLU 81	11.69	Si
fin.	3	-816	608.17	5682.35	SLU 81	9.34	Si
ini.	3	-333	443.84	5682.35	SLU 82	12.8	Si
fin.	3	-725	614.34	5682.35	SLU 82	9.25	Si

Verifiche a taglio delle travi in muratura secondo §C8.7.1.3.1 in combinazioni non sismiche

Sezione	γM	N	M	V	Vt	Vp	Vt fess. diag.	Vt,lim	Comb.	c.s.	Verifica
ini.	3	-255	511.79	-455			2259	865	SLU 79	1.9	Si
fin.	3	-746	579.78	2465			2455	960	SLU 79	0.39	No
ini.	3	-314	473.29	-629			2282	877	SLU 78	1.39	Si
fin.	3	-668	600.76	2368			2424	946	SLU 78	0.4	No
ini.	3	-308	471.74	-463			2280	876	SLU 84	1.89	Si
fin.	3	-696	617.25	2416			2435	951	SLU 84	0.39	No
ini.	3	-251	513.93	-283			2257	864	SLU 83	3.05	Si
fin.	3	-787	611.08	2588			2471	968	SLU 83	0.37	No
ini.	3	-333	443.84	-348			2290	881	SLU 82	2.53	Si
fin.	3	-725	614.34	2421			2447	956	SLU 82	0.4	No
ini.	3	-282	487.58	-334			2270	871	SLU 74	2.61	Si
fin.	3	-787	591.67	2545			2472	968	SLU 74	0.38	No
ini.	3	-257	515.48	-449			2260	866	SLU 77	1.93	Si
fin.	3	-759	594.59	2540			2460	963	SLU 77	0.38	No
ini.	3	-276	486.03	-168			2267	870	SLU 81	5.17	Si
fin.	3	-816	608.17	2593			2483	973	SLU 81	0.38	No
ini.	3	-272	460.89	-345			2265	869	SLU 62	2.52	Si
fin.	3	-742	542.88	2342			2453	959	SLU 62	0.41	No
ini.	3	-339	445.39	-514			2292	882	SLU 75	1.72	Si
fin.	3	-697	597.84	2372			2435	951	SLU 75	0.4	No

Verifiche a pressoflessione delle travi in muratura in combinazioni sismiche

Sezione	γM	N	M	Mu	Comb.	c.s.	Verifica
ini.	2	-780	-532.58	8523.53	SLV 16	16	Si
fin.	2	-2691	1617.62	8523.53	SLV 16	5.27	Si
ini.	2	1449	913.89	8523.53	SLV 8	9.33	Si
fin.	2	475	-15.13	8523.53	SLV 8	563.49	Si
ini.	2	236	1143.02	8523.53	SLV 1	7.46	Si
fin.	2	1501	-841.79	8523.53	SLV 1	10.13	Si
ini.	2	236	1143.02	8523.53	SLV 2	7.46	Si
fin.	2	1501	-841.79	8523.53	SLV 2	10.13	Si
ini.	2	-1644	-729.27	8523.53	SLV 13	11.69	Si
fin.	2	-2933	1636.41	8523.53	SLV 13	5.21	Si
ini.	2	1449	913.89	8523.53	SLV 7	9.33	Si
fin.	2	475	-15.13	8523.53	SLV 7	563.49	Si
ini.	2	-780	-532.58	8523.53	SLV 15	16	Si
fin.	2	-2691	1617.62	8523.53	SLV 15	5.27	Si
ini.	2	1100	1339.71	8523.53	SLV 4	6.36	Si
fin.	2	1743	-860.58	8523.53	SLV 4	9.9	Si
ini.	2	1100	1339.71	8523.53	SLV 3	6.36	Si
fin.	2	1743	-860.58	8523.53	SLV 3	9.9	Si
ini.	2	-1644	-729.27	8523.53	SLV 14	11.69	Si
fin.	2	-2933	1636.41	8523.53	SLV 14	5.21	Si

Verifiche a taglio delle travi in muratura secondo §C8.7.1.3.1 in combinazioni sismiche

Sezione	γM	N	M	V	Vt	Vp	Vt fess. diag.	Vt,lim	Comb.	c.s.	Verifica
ini.	2	885	352.2	5617			3235	1007	SLV 12	0.18	No
fin.	2	-856	728.33	6119			3577	1391	SLV 12	0.23	No
ini.	2	236	1143.02	-8818			3235	1165	SLV 2	0.13	No
fin.	2	1501	-841.79	-5647			3235	829	SLV 2	0.15	No
ini.	2	885	352.2	5617			3235	1007	SLV 11	0.18	No
fin.	2	-856	728.33	6119			3577	1391	SLV 11	0.23	No
ini.	2	-1644	-729.27	6144			3893	1534	SLV 13	0.25	No
fin.	2	-2933	1636.41	7629			4408	1742	SLV 13	0.23	No
ini.	2	-780	-532.58	8318			3547	1377	SLV 16	0.17	No
fin.	2	-2691	1617.62	9076			4311	1705	SLV 16	0.19	No
ini.	2	-1644	-729.27	6144			3893	1534	SLV 14	0.25	No
fin.	2	-2933	1636.41	7629			4408	1742	SLV 14	0.23	No
ini.	2	1100	1339.71	-6644			3235	949	SLV 3	0.14	No
fin.	2	1743	-860.58	-4199			3235	748	SLV 3	0.18	No
ini.	2	1100	1339.71	-6644			3235	949	SLV 4	0.14	No
fin.	2	1743	-860.58	-4199			3235	748	SLV 4	0.18	No
ini.	2	236	1143.02	-8818			3235	1165	SLV 1	0.13	No
fin.	2	1501	-841.79	-5647			3235	829	SLV 1	0.15	No
ini.	2	-780	-532.58	8318			3547	1377	SLV 15	0.17	No
fin.	2	-2691	1617.62	9076			4311	1705	SLV 15	0.19	No

Tabella dei coefficienti di sicurezza minimi

Stato limite	Coeff.s.	Comb.	Verifica
PF_SLV	5.209	SLV 13	Si
V_SLV	0.132	SLV 1	No
PF_SLU	9.206	SLU 84	Si
V_SLU	0.374	SLU 83	No

Trave di accoppiamento 110

Verifiche condotte secondo D.M. 17-01-18 (N.T.C.)

Dati geometrici

X ini.	Y ini.	Z ini.inf.	Z ini.sup.	H ini.	X fin.	Y fin.	Z fin.inf.	Z fin.sup	H fin.	Luce	Spessore	R. Trazione
-18.803	-3.254	10.7	11.45	0.75	-19.303	-3.254	10.7	11.45	0.75	0.5	0.28	30000

Caratteristiche del materiale

(Circolare 7 21-01-19 C8.5.I) Muratura in mattoni pieni e malta di calce LC2_Corti

fb_	fhk	fvk0	fhmedio	τ0	fv0	μ	ϕ	fvk,lim	E	G	FC
120000			172500	9000	20000	0.577	0.767	6500	320000000	128000000	1.2

Verifiche a pressoflessione delle travi in muratura in combinazioni non sismiche

Sezione	γM	N	M	Mu	Comb.	c.s.	Verifica
ini.	3	-35	-72.75	799.08	SLU 80	10.98	Si
fin.	3	122	-20.26	799.08	SLU 80	39.43	Si
ini.	3	-19	-76.44	799.08	SLU 79	10.45	Si
fin.	3	145	-14.72	799.08	SLU 79	54.27	Si
ini.	3	8	-69.26	799.08	SLU 58	11.54	Si
fin.	3	144	-17.92	799.08	SLU 58	44.59	Si
ini.	3	-55	-68.3	799.08	SLU 81	11.7	Si
fin.	3	128	6.31	799.08	SLU 81	126.68	Si
ini.	3	-21	-72.74	799.08	SLU 78	10.99	Si
fin.	3	150	-16.9	799.08	SLU 78	47.29	Si
ini.	3	-68	-71.21	799.08	SLU 84	11.22	Si
fin.	3	108	-9.46	799.08	SLU 84	84.44	Si
ini.	3	-52	-74.9	799.08	SLU 83	10.67	Si
fin.	3	131	-3.92	799.08	SLU 83	203.7	Si
ini.	3	21	-69.25	799.08	SLU 56	11.54	Si
fin.	3	172	-14.55	799.08	SLU 56	54.91	Si
ini.	3	-6	-76.43	799.08	SLU 77	10.46	Si
fin.	3	173	-11.36	799.08	SLU 77	70.37	Si
ini.	3	-8	-69.82	799.08	SLU 74	11.45	Si
fin.	3	170	-1.12	799.08	SLU 74	710.48	Si

Verifiche a taglio delle travi in muratura secondo §C8.7.1.3.1 in combinazioni non sismiche

Sezione	γM	N	M	V	Vt	Vp	Vt fess. diag.	Vt,lim	Comb.	c.s.	Verifica
ini.	3	66	-64.59	1781			809	290	SLU 69	0.16	No
fin.	3	200	-12.68	-1166			809	257	SLU 69	0.22	No
ini.	3	-6	-76.43	2003			811	306	SLU 77	0.15	No
fin.	3	173	-11.36	-1235			809	264	SLU 77	0.21	No
ini.	3	-8	-69.82	1944			812	306	SLU 74	0.16	No
fin.	3	170	-1.12	-1165			809	265	SLU 74	0.23	No
ini.	3	-35	-72.75	1865			823	312	SLU 80	0.17	No
fin.	3	122	-20.26	-1216			809	277	SLU 80	0.23	No
ini.	3	-19	-76.44	1938			816	308	SLU 79	0.16	No
fin.	3	145	-14.72	-1212			809	271	SLU 79	0.22	No
ini.	3	-52	-74.9	1974			830	316	SLU 83	0.16	No
fin.	3	131	-3.92	-1172			809	274	SLU 83	0.23	No
ini.	3	-24	-66.13	1870			818	310	SLU 75	0.17	No
fin.	3	147	-6.67	-1169			809	271	SLU 75	0.23	No
ini.	3	-55	-68.3	1914			831	316	SLU 81	0.17	No
fin.	3	128	6.31	-1103			809	275	SLU 81	0.25	No
ini.	3	-21	-72.74	1930			817	309	SLU 78	0.16	No
fin.	3	150	-16.9	-1238			809	270	SLU 78	0.22	No
ini.	3	21	-69.25	1794			809	300	SLU 56	0.17	No
fin.	3	172	-14.55	-1139			809	264	SLU 56	0.23	No

Verifiche a pressoflessione delle travi in muratura in combinazioni sismiche

Sezione	γM	N	M	Mu	Comb.	c.s.	Verifica
ini.	2	3357	227.27	1198.62	SLV 14	5.27	Si
fin.	2	3691	807.05	1198.62	SLV 14	1.49	Si
ini.	2	-3021	-215.83	1198.62	SLV 2	5.55	Si
fin.	2	-3943	-916.31	1198.62	SLV 2	1.31	Si
ini.	2	3065	133.16	1198.62	SLV 16	9	Si
fin.	2	4182	922.45	1198.62	SLV 16	1.3	Si
ini.	2	-3313	-309.94	1198.62	SLV 3	3.87	Si
fin.	2	-3452	-800.91	1198.62	SLV 3	1.5	Si
ini.	2	3065	133.16	1198.62	SLV 15	9	Si
fin.	2	4182	922.45	1198.62	SLV 15	1.3	Si
ini.	2	491	-131.72	1198.62	SLV 11	9.1	Si
fin.	2	2082	453.91	1198.62	SLV 11	2.64	Si
ini.	2	491	-131.72	1198.62	SLV 12	9.1	Si
fin.	2	2082	453.91	1198.62	SLV 12	2.64	Si
ini.	2	-3313	-309.94	1198.62	SLV 4	3.87	Si
fin.	2	-3452	-800.91	1198.62	SLV 4	1.5	Si
ini.	2	3357	227.27	1198.62	SLV 13	5.27	Si
fin.	2	3691	807.05	1198.62	SLV 13	1.49	Si
ini.	2	-3021	-215.83	1198.62	SLV 1	5.55	Si
fin.	2	-3943	-916.31	1198.62	SLV 1	1.31	Si

Verifiche a taglio delle travi in muratura secondo §C8.7.1.3.1 in combinazioni sismiche

Sezione	γM	N	M	V	Vt	Vp	Vt fess. diag.	Vt,lim	Comb.	c.s.	Verifica
ini.	2	491	-131.72	2880			1213	333	SLV 12	0.12	No
fin.	2	2082	453.91	1352			1213	0	SLV 12	0	No
ini.	2	-448	49.06	-387			1392	545	SLV 6	1.41	Si
fin.	2	-1843	-447.77	-2895			1950	758	SLV 6	0.26	No
ini.	2	1466	181.98	643			1213	0	SLV 9	0	No
fin.	2	447	69.24	-1628			1213	346	SLV 9	0.21	No
ini.	2	-448	49.06	-387			1392	545	SLV 5	1.41	Si
fin.	2	-1843	-447.77	-2895			1950	758	SLV 5	0.26	No
ini.	2	1466	181.98	643			1213	0	SLV 10	0	No
fin.	2	447	69.24	-1628			1213	346	SLV 10	0.21	No

Sezione	γM	N	M	V	Vt	Vp	Vt fess. diag.	Vt,lim	Comb.	c.s.	Verifica
ini.	2	3357	227.27	2628			1213	0	SLV 13	0	No
fin.	2	3691	807.05	893			1213	0	SLV 13	0	No
ini.	2	3065	133.16	3299			1213	0	SLV 16	0	No
fin.	2	4182	922.45	1787			1213	0	SLV 16	0	No
ini.	2	3357	227.27	2628			1213	0	SLV 14	0	No
fin.	2	3691	807.05	893			1213	0	SLV 14	0	No
ini.	2	3065	133.16	3299			1213	0	SLV 15	0	No
fin.	2	4182	922.45	1787			1213	0	SLV 15	0	No
ini.	2	491	-131.72	2880			1213	333	SLV 11	0.12	No
fin.	2	2082	453.91	1352			1213	0	SLV 11	0	No

Tabella dei coefficienti di sicurezza minimi

Stato limite	Coeff.s.	Comb.	Verifica
PF_SLV	1.299	SLV 15	Si
V_SLV	0	SLV 9	No
PF_SLU	10.454	SLU 79	Si
V_SLU	0.153	SLU 77	No

Trave di accoppiamento 111

Verifiche condotte secondo D.M. 17-01-18 (N.T.C.)

Dati geometrici

X ini.	Y ini.	Z ini.inf.	Z ini.sup.	H ini.	X fin.	Y fin.	Z fin.inf.	Z fin.sup	H fin.	Luce	Spessore	R. Trazione
-17.275	-3.254	7.9	8.8	0.9	-18.275	-3.254	7.9	8.8	0.9	1	0.28	30000

Caratteristiche del materiale

(Circolare 7 21-01-19 C8.5.I) Muratura in mattoni pieni e malta di calce LC2_Corti

fb_	fhk	fvk0	fhmedio	τ0	fv0	μ	ϕ	fvk,lim	E	G	FC
120000			172500	9000	20000	0.577	0.767	6500	320000000	128000000	1.2

Verifiche a pressoflessione delle travi in muratura in combinazioni non sismiche

Sezione	γM	N	M	Mu	Comb.	c.s.	Verifica
ini.	3	-234	-160.26	1150.68	SLU 65	7.18	Si
fin.	3	-441	239.17	1150.68	SLU 65	4.81	Si
ini.	3	-247	-145.69	1150.68	SLU 68	7.9	Si
fin.	3	-396	226.32	1150.68	SLU 68	5.08	Si
ini.	3	-239	-150.57	1150.68	SLU 52	7.64	Si
fin.	3	-397	225.16	1150.68	SLU 52	5.11	Si
ini.	3	-172	-195.24	1150.68	SLU 81	5.89	Si
fin.	3	-255	225.15	1150.68	SLU 81	5.11	Si
ini.	3	-205	-176.9	1150.68	SLU 75	6.5	Si
fin.	3	-306	230.02	1150.68	SLU 75	5	Si
ini.	3	-208	-187.32	1150.68	SLU 82	6.14	Si
fin.	3	-321	235.91	1150.68	SLU 82	4.88	Si
ini.	3	-207	-161.65	1150.68	SLU 67	7.12	Si
fin.	3	-360	227.27	1150.68	SLU 67	5.06	Si
ini.	3	-233	-175.51	1150.68	SLU 73	6.56	Si
fin.	3	-387	241.91	1150.68	SLU 73	4.76	Si
ini.	3	-221	-172.76	1150.68	SLU 84	6.66	Si
fin.	3	-275	223.06	1150.68	SLU 84	5.16	Si
ini.	3	-246	-160.94	1150.68	SLU 76	7.15	Si
fin.	3	-342	229.06	1150.68	SLU 76	5.02	Si

Verifiche a taglio delle travi in muratura secondo §C8.7.1.3.1 in combinazioni non sismiche

Sezione	γM	N	M	V	Vt	Vp	Vt fess. diag.	Vt,lim	Comb.	c.s.	Verifica
ini.	3	-171	-169.58	-47			935	361	SLU 66	7.65	Si
fin.	3	-294	216.52	1227			979	382	SLU 66	0.31	No
ini.	3	-190	-130.08	-186			942	364	SLU 48	1.95	Si
fin.	3	-258	186.92	1171			966	376	SLU 48	0.32	No
ini.	3	-200	-144.33	-151			946	366	SLU 71	2.42	Si
fin.	3	-241	195.54	1166			960	373	SLU 71	0.32	No
ini.	3	-199	-159.58	-125			945	366	SLU 79	2.93	Si
fin.	3	-187	198.28	1142			941	364	SLU 79	0.32	No
ini.	3	-184	-155.01	-135			940	363	SLU 69	2.7	Si
fin.	3	-249	203.67	1215			963	374	SLU 69	0.31	No
ini.	3	-169	-184.82	-21			934	360	SLU 74	17.25	Si
fin.	3	-240	219.26	1202			960	373	SLU 74	0.31	No
ini.	3	-218	-162.33	-68			952	369	SLU 78	5.42	Si
fin.	3	-260	217.17	1183			967	376	SLU 78	0.32	No
ini.	3	-189	-145.33	-160			941	364	SLU 56	2.27	Si
fin.	3	-204	189.66	1146			947	366	SLU 56	0.32	No
ini.	3	-182	-170.26	-108			939	363	SLU 77	3.35	Si
fin.	3	-195	206.41	1191			944	365	SLU 77	0.31	No
ini.	3	-220	-147.09	-94			953	369	SLU 70	3.91	Si
fin.	3	-314	214.42	1208			987	385	SLU 70	0.32	No

Verifiche a pressoflessione delle travi in muratura in combinazioni sismiche

Sezione	γM	N	M	Mu	Comb.	c.s.	Verifica
ini.	2	-3114	1795.39	1726.01	SLV 2	0.96	No
fin.	2	2343	-1168.69	1726.01	SLV 2	1.48	Si
ini.	2	2845	-2060.02	1726.01	SLV 16	0.84	No
fin.	2	-2827	1503.27	1726.01	SLV 16	1.15	Si
ini.	2	-3349	2016.89	1726.01	SLV 4	0.86	No
fin.	2	3250	-1449.71	1726.01	SLV 4	1.19	Si
ini.	2	3079	-2281.51	1726.01	SLV 14	0.76	No
fin.	2	-3734	1784.28	1726.01	SLV 14	0.97	No

Sezione	γM	N	M	Mu	Comb.	c.s.	Verifica
ini.	2	3079	-2281.51	1726.01	SLV 13	0.76	No
fin.	2	-3734	1784.28	1726.01	SLV 13	0.97	No
ini.	2	2845	-2060.02	1726.01	SLV 15	0.84	No
fin.	2	-2827	1503.27	1726.01	SLV 15	1.15	Si
ini.	2	-3349	2016.89	1726.01	SLV 3	0.86	No
fin.	2	3250	-1449.71	1726.01	SLV 3	1.19	Si
ini.	2	1185	-1113	1726.01	SLV 9	1.55	Si
fin.	2	-2665	1078.59	1726.01	SLV 9	1.6	Si
ini.	2	1185	-1113	1726.01	SLV 10	1.55	Si
fin.	2	-2665	1078.59	1726.01	SLV 10	1.6	Si
ini.	2	-3114	1795.39	1726.01	SLV 1	0.96	No
fin.	2	2343	-1168.69	1726.01	SLV 1	1.48	Si

Verifiche a taglio delle travi in muratura secondo §C8.7.1.3.1 in combinazioni sismiche

Sezione	γM	N	M	V	Vt	Vp	Vt fess. diag.	Vt,lim	Comb.	c.s.	Verifica
ini.	2	2845	-2060.02	5634			1310	0	SLV 15	0	No
fin.	2	-2827	1503.27	5710			2328	888	SLV 15	0.16	No
ini.	2	3079	-2281.51	8489			1310	0	SLV 13	0	No
fin.	2	-3734	1784.28	6767			2654	982	SLV 13	0.15	No
ini.	2	3079	-2281.51	8489			1310	0	SLV 14	0	No
fin.	2	-3734	1784.28	6767			2654	982	SLV 14	0.15	No
ini.	2	2845	-2060.02	5634			1310	0	SLV 16	0	No
fin.	2	-2827	1503.27	5710			2328	888	SLV 16	0.16	No
ini.	2	-3349	2016.89	-8460			2516	943	SLV 4	0.11	No
fin.	2	3250	-1449.71	-4969			1310	0	SLV 4	0	No
ini.	2	-3349	2016.89	-8460			2516	943	SLV 3	0.11	No
fin.	2	3250	-1449.71	-4969			1310	0	SLV 3	0	No
ini.	2	-3114	1795.39	-5605			2431	919	SLV 1	0.16	No
fin.	2	2343	-1168.69	-3913			1310	0	SLV 1	0	No
ini.	2	-3114	1795.39	-5605			2431	919	SLV 2	0.16	No
fin.	2	2343	-1168.69	-3913			1310	0	SLV 2	0	No
ini.	2	-1455	848.38	-6858			1834	724	SLV 8	0.11	No
fin.	2	2181	-744.02	-2464			1310	0	SLV 8	0	No
ini.	2	-1455	848.38	-6858			1834	724	SLV 7	0.11	No
fin.	2	2181	-744.02	-2464			1310	0	SLV 7	0	No

Tabella dei coefficienti di sicurezza minimi

Stato limite	Coeff.s.	Comb.	Verifica
PF_SLV	0.757	SLV 13	No
V_SLV	0	SLV 1	No
PF_SLU	4.757	SLU 73	Si
V_SLU	0.306	SLU 77	No

Trave di accoppiamento 112

Verifiche condotte secondo D.M. 17-01-18 (N.T.C.)

Dati geometrici

X ini.	Y ini.	Z ini.inf.	Z ini.sup.	H ini.	X fin.	Y fin.	Z fin.inf.	Z fin.sup	H fin.	Luce	Spessore	R. Trazione
-17.275	-3.254	10.7	11.45	0.75	-18.275	-3.254	10.7	11.45	0.75	1	0.28	30000

Caratteristiche del materiale

(Circolare 7 21-01-19 C8.5.I) Muratura in mattoni pieni e malta di calce LC2_Corti

fb_	fhk	fvk0	fhmedio	τ0	fv0	μ	ϕ	fvk,lim	E	G	FC
120000			172500	9000	20000	0.577	0.767	6500	320000000	128000000	1.2

Verifiche a pressoflessione delle travi in muratura in combinazioni non sismiche

Sezione	γM	N	M	Mu	Comb.	c.s.	Verifica
ini.	3	223	81.06	799.08	SLU 58	9.86	Si
fin.	3	2	-70.7	799.08	SLU 58	11.3	Si
ini.	3	175	84.16	799.08	SLU 37	9.49	Si
fin.	3	-29	-71.45	799.08	SLU 37	11.18	Si
ini.	3	221	80.19	799.08	SLU 56	9.96	Si
fin.	3	18	-67.3	799.08	SLU 56	11.87	Si
ini.	3	173	83.29	799.08	SLU 35	9.59	Si
fin.	3	-12	-68.04	799.08	SLU 35	11.74	Si
ini.	3	212	75.38	799.08	SLU 71	10.6	Si
fin.	3	38	-62.86	799.08	SLU 71	12.71	Si
ini.	3	198	89.16	799.08	SLU 79	8.96	Si
fin.	3	-8	-75.43	799.08	SLU 79	10.59	Si
ini.	3	109	76.87	799.08	SLU 83	10.39	Si
fin.	3	-11	-63.08	799.08	SLU 83	12.67	Si
ini.	3	179	68.85	799.08	SLU 80	11.61	Si
fin.	3	-42	-78.22	799.08	SLU 80	10.22	Si
ini.	3	196	88.29	799.08	SLU 77	9.05	Si
fin.	3	9	-72.03	799.08	SLU 77	11.09	Si
ini.	3	200	76.07	799.08	SLU 16	10.5	Si
fin.	3	-20	-66.72	799.08	SLU 16	11.98	Si

Verifiche a taglio delle travi in muratura secondo §C8.7.1.3.1 in combinazioni non sismiche

Sezione	γM	N	M	V	Vt	Vp	Vt fess. diag.	Vt,lim	Comb.	c.s.	Verifica
ini.	3	223	81.06	800			607	188	SLU 58	0.24	No
fin.	3	2	-70.7	-1520			607	228	SLU 58	0.15	No
ini.	3	221	80.19	833			607	189	SLU 56	0.23	No
fin.	3	18	-67.3	-1537			607	225	SLU 56	0.15	No
ini.	3	109	76.87	960			607	210	SLU 83	0.22	No
fin.	3	-11	-63.08	-1625			610	230	SLU 83	0.14	No

Sezione	γM	N	M	V	Vt	Vp	Vt fess. diag.	Vt,lim	Comb.	c.s.	Verifica
ini.	3	90	56.57	941			607	213	SLU 84	0.23	No
fin.	3	-45	-65.87	-1572			620	236	SLU 84	0.15	No
ini.	3	198	89.16	891			607	193	SLU 79	0.22	No
fin.	3	-8	-75.43	-1663			609	230	SLU 79	0.14	No
ini.	3	210	74.51	857			607	191	SLU 69	0.22	No
fin.	3	55	-59.45	-1495			607	219	SLU 69	0.15	No
ini.	3	177	67.98	905			607	197	SLU 78	0.22	No
fin.	3	-26	-74.82	-1627			614	232	SLU 78	0.14	No
ini.	3	113	70.1	964			607	209	SLU 74	0.22	No
fin.	3	26	-54.29	-1563			607	224	SLU 74	0.14	No
ini.	3	196	88.29	924			607	194	SLU 77	0.21	No
fin.	3	9	-72.03	-1679			607	227	SLU 77	0.14	No
ini.	3	179	68.85	872			607	197	SLU 80	0.23	No
fin.	3	-42	-78.22	-1610			619	235	SLU 80	0.15	No

Verifiche a pressoflessione delle travi in muratura in combinazioni sismiche

Sezione	γM	N	M	Mu	Comb.	c.s.	Verifica
ini.	2	1519	379.62	1198.62	SLV 8	3.16	Si
fin.	2	-2211	-720.13	1198.62	SLV 8	1.66	Si
ini.	2	-583	-570.62	1198.62	SLV 15	2.1	Si
fin.	2	4288	1060.91	1198.62	SLV 15	1.13	Si
ini.	2	657	634.94	1198.62	SLV 1	1.89	Si
fin.	2	-4200	-1108.15	1198.62	SLV 1	1.08	Si
ini.	2	-1297	-662.35	1198.62	SLV 13	1.81	Si
fin.	2	4828	1265.22	1198.62	SLV 13	0.95	No
ini.	2	1371	726.66	1198.62	SLV 3	1.65	Si
fin.	2	-4740	-1312.45	1198.62	SLV 3	0.91	No
ini.	2	1519	379.62	1198.62	SLV 7	3.16	Si
fin.	2	-2211	-720.13	1198.62	SLV 7	1.66	Si
ini.	2	-583	-570.62	1198.62	SLV 16	2.1	Si
fin.	2	4288	1060.91	1198.62	SLV 16	1.13	Si
ini.	2	657	634.94	1198.62	SLV 2	1.89	Si
fin.	2	-4200	-1108.15	1198.62	SLV 2	1.08	Si
ini.	2	-1297	-662.35	1198.62	SLV 14	1.81	Si
fin.	2	4828	1265.22	1198.62	SLV 14	0.95	No
ini.	2	1371	726.66	1198.62	SLV 4	1.65	Si
fin.	2	-4740	-1312.45	1198.62	SLV 4	0.91	No

Verifiche a taglio delle travi in muratura secondo §C8.7.1.3.1 in combinazioni sismiche

Sezione	γM	N	M	V	Vt	Vp	Vt fess. diag.	Vt,lim	Comb.	c.s.	Verifica
ini.	2	-1297	-662.35	4191			1299	512	SLV 14	0.12	No
fin.	2	4828	1265.22	4114			910	0	SLV 14	0	No
ini.	2	-583	-570.62	3716			1085	427	SLV 16	0.11	No
fin.	2	4288	1060.91	3042			910	0	SLV 16	0	No
ini.	2	-1297	-662.35	4191			1299	512	SLV 13	0.12	No
fin.	2	4828	1265.22	4114			910	0	SLV 13	0	No
ini.	2	1371	726.66	-2800			910	0	SLV 4	0	No
fin.	2	-4740	-1312.45	-6073			2332	804	SLV 4	0.13	No
ini.	2	-583	-570.62	3716			1085	427	SLV 15	0.11	No
fin.	2	4288	1060.91	3042			910	0	SLV 15	0	No
ini.	2	1519	379.62	-1073			910	0	SLV 8	0	No
fin.	2	-2211	-720.13	-4134			1573	603	SLV 8	0.15	No
ini.	2	1371	726.66	-2800			910	0	SLV 3	0	No
fin.	2	-4740	-1312.45	-6073			2332	804	SLV 3	0.13	No
ini.	2	1519	379.62	-1073			910	0	SLV 7	0	No
fin.	2	-2211	-720.13	-4134			1573	603	SLV 7	0.15	No
ini.	2	-1446	-315.31	2464			1344	528	SLV 9	0.21	No
fin.	2	2299	672.89	2176			910	0	SLV 9	0	No
ini.	2	-1446	-315.31	2464			1344	528	SLV 10	0.21	No
fin.	2	2299	672.89	2176			910	0	SLV 10	0	No

Tabella dei coefficienti di sicurezza minimi

Stato limite	Coeff.s.	Comb.	Verifica
PF_SLV	0.913	SLV 3	No
V_SLV	0	SLV 3	No
PF_SLU	8.962	SLU 79	Si
V_SLU	0.135	SLU 77	No

Trave di accoppiamento 113

Verifiche condotte secondo D.M. 17-01-18 (N.T.C.)

Dati geometrici

X ini.	Y ini.	Z ini.inf.	Z ini.sup.	H ini.	X fin.	Y fin.	Z fin.inf.	Z fin.sup	H fin.	Luce	Spessore	R. Trazione
-19.595	1.283	10	11.45	1.45	-19.595	1.983	10	11.45	1.45	0.7	0.14	30000

Caratteristiche del materiale

(Circolare 7 21-01-19 C8.5.I) Muratura in mattoni pieni e malta di calce LC2_Corti

fb_	fhk	fvk0	fhmedio	τ0	fv0	μ	ϕ	fvk,lim	E	G	FC
120000			172500	9000	20000	0.577	0.767	6500	320000000	128000000	1.2

Verifiche a pressoflessione delle travi in muratura in combinazioni non sismiche

Sezione	γM	N	M	Mu	Comb.	c.s.	Verifica
ini.	3	-26	-96.32	1493.39	SLU 81	15.5	Si
fin.	3	-26	-1136.89	1493.39	SLU 81	1.31	Si
ini.	3	-31	-98.75	1493.39	SLU 83	15.12	Si
fin.	3	-31	-1197.85	1493.39	SLU 83	1.25	Si

Sezione	γM	N	M	Mu	Comb.	c.s.	Verifica
ini.	3	-28	-99.54	1493.39	SLU 41	15	Si
fin.	3	-28	-1158.41	1493.39	SLU 41	1.29	Si
ini.	3	-53	-87.8	1493.39	SLU 78	17.01	Si
fin.	3	-53	-1157.34	1493.39	SLU 78	1.29	Si
ini.	3	-41	-97.45	1493.39	SLU 42	15.32	Si
fin.	3	-41	-1148.26	1493.39	SLU 42	1.3	Si
ini.	3	-40	-94.23	1493.39	SLU 82	15.85	Si
fin.	3	-40	-1126.73	1493.39	SLU 82	1.33	Si
ini.	3	-39	-89.89	1493.39	SLU 77	16.61	Si
fin.	3	-39	-1167.49	1493.39	SLU 77	1.28	Si
ini.	3	-45	-96.66	1493.39	SLU 84	15.45	Si
fin.	3	-45	-1187.7	1493.39	SLU 84	1.26	Si
ini.	3	-36	-90.68	1493.39	SLU 35	16.47	Si
fin.	3	-36	-1128.05	1493.39	SLU 35	1.32	Si
ini.	3	-36	-86.43	1493.39	SLU 79	17.28	Si
fin.	3	-36	-1119.78	1493.39	SLU 79	1.33	Si

Verifiche a taglio delle travi in muratura secondo §C8.7.1.3.1 in combinazioni non sismiche

Sezione	γM	N	M	V	Vt	Vp	Vt fess. diag.	Vt,lim	Comb.	c.s.	Verifica
ini.	3	-34	-87.46	-1289			796	302	SLU 74	0.23	No
fin.	3	-34	-1106.53	-1640			796	302	SLU 74	0.18	No
ini.	3	-40	-94.23	-1308			798	303	SLU 82	0.23	No
fin.	3	-40	-1126.73	-1659			798	303	SLU 82	0.18	No
ini.	3	-26	-96.32	-1320			792	300	SLU 81	0.23	No
fin.	3	-26	-1136.89	-1670			792	300	SLU 81	0.18	No
ini.	3	-39	-89.89	-1373			798	303	SLU 77	0.22	No
fin.	3	-39	-1167.49	-1723			798	303	SLU 77	0.18	No
ini.	3	-36	-86.43	-1310			796	302	SLU 79	0.23	No
fin.	3	-36	-1119.78	-1660			796	302	SLU 79	0.18	No
ini.	3	-53	-87.8	-1361			803	305	SLU 78	0.22	No
fin.	3	-53	-1157.34	-1712			803	305	SLU 78	0.18	No
ini.	3	-28	-99.54	-1380			793	300	SLU 41	0.22	No
fin.	3	-28	-1158.41	-1657			793	300	SLU 41	0.18	No
ini.	3	-45	-96.66	-1392			800	304	SLU 84	0.22	No
fin.	3	-45	-1187.7	-1743			800	304	SLU 84	0.17	No
ini.	3	-41	-97.45	-1368			798	303	SLU 42	0.22	No
fin.	3	-41	-1148.26	-1645			798	303	SLU 42	0.18	No
ini.	3	-31	-98.75	-1403			794	301	SLU 83	0.21	No
fin.	3	-31	-1197.85	-1754			794	301	SLU 83	0.17	No

Verifiche a pressoflessione delle travi in muratura in combinazioni sismiche

Sezione	γM	N	M	Mu	Comb.	c.s.	Verifica
ini.	2	1402	387.64	2240.09	SLV 10	5.78	Si
fin.	2	1431	6136.71	2240.09	SLV 10	0.37	No
ini.	2	-1439	-469.47	2240.09	SLV 7	4.77	Si
fin.	2	-1468	-7255.07	2240.09	SLV 7	0.31	No
ini.	2	-1602	-98.68	2240.09	SLV 11	22.7	Si
fin.	2	-1241	-6000.26	2240.09	SLV 11	0.37	No
ini.	2	-1602	-98.68	2240.09	SLV 12	22.7	Si
fin.	2	-1241	-6000.26	2240.09	SLV 12	0.37	No
ini.	2	1565	16.85	2240.09	SLV 6	132.97	Si
fin.	2	1204	4881.9	2240.09	SLV 6	0.46	No
ini.	2	1402	387.64	2240.09	SLV 9	5.78	Si
fin.	2	1431	6136.71	2240.09	SLV 9	0.37	No
ini.	2	-196	-731.85	2240.09	SLV 4	3.06	Si
fin.	2	-798	-4471.07	2240.09	SLV 4	0.5	No
ini.	2	1565	16.85	2240.09	SLV 5	132.97	Si
fin.	2	1204	4881.9	2240.09	SLV 5	0.46	No
ini.	2	-196	-731.85	2240.09	SLV 3	3.06	Si
fin.	2	-798	-4471.07	2240.09	SLV 3	0.5	No
ini.	2	-1439	-469.47	2240.09	SLV 8	4.77	Si
fin.	2	-1468	-7255.07	2240.09	SLV 8	0.31	No

Verifiche a taglio delle travi in muratura secondo §C8.7.1.3.1 in combinazioni sismiche

Sezione	γM	N	M	V	Vt	Vp	Vt fess. diag.	Vt,lim	Comb.	c.s.	Verifica
ini.	2	-1439	-469.47	-9548			1748	686	SLV 8	0.07	No
fin.	2	-1468	-7255.07	-9995			1760	690	SLV 8	0.07	No
ini.	2	1402	387.64	8319			1173	0	SLV 9	0	No
fin.	2	1431	6136.71	8233			1173	0	SLV 9	0	No
ini.	2	-1439	-469.47	-9548			1748	686	SLV 7	0.07	No
fin.	2	-1468	-7255.07	-9995			1760	690	SLV 7	0.07	No
ini.	2	1565	16.85	7203			1173	0	SLV 6	0	No
fin.	2	1204	4881.9	6717			1173	0	SLV 6	0	No
ini.	2	160	650.02	3760			1173	405	SLV 13	0.11	No
fin.	2	761	3352.72	4154			1173	221	SLV 13	0.05	No
ini.	2	1565	16.85	7203			1173	0	SLV 5	0	No
fin.	2	1204	4881.9	6717			1173	0	SLV 5	0	No
ini.	2	-1602	-98.68	-8431			1813	709	SLV 12	0.08	No
fin.	2	-1241	-6000.26	-8479			1669	658	SLV 12	0.08	No
ini.	2	-1602	-98.68	-8431			1813	709	SLV 11	0.08	No
fin.	2	-1241	-6000.26	-8479			1669	658	SLV 11	0.08	No
ini.	2	160	650.02	3760			1173	405	SLV 14	0.11	No
fin.	2	761	3352.72	4154			1173	221	SLV 14	0.05	No
ini.	2	1402	387.64	8319			1173	0	SLV 10	0	No
fin.	2	1431	6136.71	8233			1173	0	SLV 10	0	No

Tabella dei coefficienti di sicurezza minimi

Stato limite	Coeff.s.	Comb.	Verifica
PF_SLV	0.309	SLV 7	No
V_SLV	0	SLV 5	No

Stato limite	Coeff.s.	Comb.	Verifica
PF_SLU	1.247	SLU 83	Si
V_SLU	0.172	SLU 83	No

Trave di accoppiamento 114

Verifiche condotte secondo D.M. 17-01-18 (N.T.C.)

Dati geometrici

X ini.	Y ini.	Z ini.inf.	Z ini.sup.	H ini.	X fin.	Y fin.	Z fin.inf.	Z fin.sup	H fin.	Luce	Spessore	R. Trazione
-16.992	-4.589	11.01	11.45	0.44	-16.992	-3.499	11.01	11.45	0.44	1.09	0.3	30000

Caratteristiche del materiale

(Circolare 7 21-01-19 C8.5.I) Muratura in mattoni pieni e malta di calce LC2_Corti

fb_	fhk	fvk0	fhmedio	τ0	fv0	μ	ϕ	fvk,lim	E	G	FC
120000			172500	9000	20000	0.577	0.767	6500	320000000	128000000	1.2

Verifiche a pressoflessione delle travi in muratura in combinazioni non sismiche

Sezione	γM	N	M	Mu	Comb.	c.s.	Verifica
ini.	3	277	-81.65	294.67	SLU 52	3.61	Si
fin.	3	-158	126.46	294.67	SLU 52	2.33	Si
ini.	3	285	-83.38	294.67	SLU 31	3.53	Si
fin.	3	-166	134.08	294.67	SLU 31	2.2	Si
ini.	3	287	-84.59	294.67	SLU 34	3.48	Si
fin.	3	-164	133.63	294.67	SLU 34	2.21	Si
ini.	3	292	-86.75	294.67	SLU 76	3.4	Si
fin.	3	-169	133	294.67	SLU 76	2.22	Si
ini.	3	272	-79.49	294.67	SLU 10	3.71	Si
fin.	3	-153	127.09	294.67	SLU 10	2.32	Si
ini.	3	290	-85.54	294.67	SLU 73	3.44	Si
fin.	3	-171	133.45	294.67	SLU 73	2.21	Si
ini.	3	275	-80.7	294.67	SLU 13	3.65	Si
fin.	3	-151	126.64	294.67	SLU 13	2.33	Si
ini.	3	280	-82.59	294.67	SLU 65	3.57	Si
fin.	3	-157	126.25	294.67	SLU 65	2.33	Si
ini.	3	278	-81.64	294.67	SLU 26	3.61	Si
fin.	3	-150	126.43	294.67	SLU 26	2.33	Si
ini.	3	275	-80.43	294.67	SLU 23	3.66	Si
fin.	3	-152	126.88	294.67	SLU 23	2.32	Si

Verifiche a taglio delle travi in muratura secondo §C8.7.1.3.1 in combinazioni non sismiche

Sezione	γM	N	M	V	Vt	Vp	Vt fess. diag.	Vt,lim	Comb.	c.s.	Verifica
ini.	3	51	-19.19	-216			339	120	SLU 58	0.55	No
fin.	3	-48	11.55	-102			352	134	SLU 58	1.31	Si
ini.	3	69	-24.59	-226			339	117	SLU 77	0.52	No
fin.	3	-68	22.01	-87			357	137	SLU 77	1.58	Si
ini.	3	66	-23.37	-212			339	118	SLU 74	0.56	No
fin.	3	-69	22.46	-89			357	137	SLU 74	1.55	Si
ini.	3	65	-23.13	-220			339	118	SLU 83	0.54	No
fin.	3	-69	22.08	-90			357	137	SLU 83	1.52	Si
ini.	3	64	-23.08	-229			339	118	SLU 79	0.52	No
fin.	3	-61	18.54	-92			355	136	SLU 79	1.48	Si
ini.	3	63	-21.92	-206			339	118	SLU 81	0.57	No
fin.	3	-70	22.53	-92			358	137	SLU 81	1.49	Si
ini.	3	59	-21.64	-214			339	119	SLU 69	0.56	No
fin.	3	-54	14.81	-95			353	135	SLU 69	1.42	Si
ini.	3	52	-19.24	-207			339	120	SLU 62	0.58	No
fin.	3	-56	15.09	-100			354	135	SLU 62	1.35	Si
ini.	3	54	-20.13	-217			339	119	SLU 71	0.55	No
fin.	3	-47	11.34	-101			351	134	SLU 71	1.33	Si
ini.	3	56	-20.7	-213			339	119	SLU 56	0.56	No
fin.	3	-55	15.02	-97			353	135	SLU 56	1.4	Si

Verifiche a pressoflessione delle travi in muratura in combinazioni sismiche

Sezione	γM	N	M	Mu	Comb.	c.s.	Verifica
ini.	2	-2055	806.46	442.01	SLV 9	0.55	No
fin.	2	332	-1650.16	442.01	SLV 9	0.27	No
ini.	2	2130	-833.67	442.01	SLV 7	0.53	No
fin.	2	-412	1670.05	442.01	SLV 7	0.26	No
ini.	2	-2383	934.05	442.01	SLV 6	0.47	No
fin.	2	739	-1869.97	442.01	SLV 6	0.24	No
ini.	2	1262	-491.41	442.01	SLV 16	0.9	No
fin.	2	-890	907.29	442.01	SLV 16	0.49	No
ini.	2	2130	-833.67	442.01	SLV 8	0.53	No
fin.	2	-412	1670.05	442.01	SLV 8	0.26	No
ini.	2	2459	-961.26	442.01	SLV 12	0.46	No
fin.	2	-818	1889.85	442.01	SLV 12	0.23	No
ini.	2	1262	-491.41	442.01	SLV 15	0.9	No
fin.	2	-890	907.29	442.01	SLV 15	0.49	No
ini.	2	2459	-961.26	442.01	SLV 11	0.46	No
fin.	2	-818	1889.85	442.01	SLV 11	0.23	No
ini.	2	-2383	934.05	442.01	SLV 5	0.47	No
fin.	2	739	-1869.97	442.01	SLV 5	0.24	No
ini.	2	-2055	806.46	442.01	SLV 10	0.55	No
fin.	2	332	-1650.16	442.01	SLV 10	0.27	No

Verifiche a taglio delle travi in muratura secondo §C8.7.1.3.1 in combinazioni sismiche

Sezione	γM	N	M	V	Vt	Vp	Vt fess. diag.	Vt,lim	Comb.	c.s.	Verifica
ini.	2	-2383	934.05	-3223			1144	411	SLV 6	0.13	No
fin.	2	739	-1869.97	-226			508	0	SLV 6	0	No
ini.	2	-1187	464.2	-293			825	320	SLV 2	1.09	Si
fin.	2	810	-887.41	-113			508	0	SLV 2	0	No
ini.	2	2130	-833.67	3443			508	0	SLV 8	0	No
fin.	2	-412	1670.05	72			618	244	SLV 8	3.38	Si
ini.	2	1262	-491.41	2			508	0	SLV 16	0	No
fin.	2	-890	907.29	-48			746	293	SLV 16	6.15	Si
ini.	2	2459	-961.26	2932			508	0	SLV 12	0	No
fin.	2	-818	1889.85	65			727	286	SLV 12	4.41	Si
ini.	2	-2383	934.05	-3223			1144	411	SLV 5	0.13	No
fin.	2	739	-1869.97	-226			508	0	SLV 5	0	No
ini.	2	2459	-961.26	2932			508	0	SLV 11	0	No
fin.	2	-818	1889.85	65			727	286	SLV 11	4.41	Si
ini.	2	1262	-491.41	2			508	0	SLV 15	0	No
fin.	2	-890	907.29	-48			746	293	SLV 15	6.15	Si
ini.	2	2130	-833.67	3443			508	0	SLV 7	0	No
fin.	2	-412	1670.05	72			618	244	SLV 7	3.38	Si
ini.	2	-1187	464.2	-293			825	320	SLV 1	1.09	Si
fin.	2	810	-887.41	-113			508	0	SLV 1	0	No

Tabella dei coefficienti di sicurezza minimi

Stato limite	Coeff.s.	Comb.	Verifica
PF_SLV	0.234	SLV 11	No
V_SLV	0	SLV 1	No
PF_SLU	2.198	SLU 31	Si
V_SLU	0.515	SLU 79	No

Trave di accoppiamento 115

Verifiche condotte secondo D.M. 17-01-18 (N.T.C.)

Dati geometrici

X ini.	Y ini.	Z ini.inf.	Z ini.sup.	H ini.	X fin.	Y fin.	Z fin.inf.	Z fin.sup	H fin.	Luce	Spessore	R. Trazione
-15.3	-3.254	10	11.45	1.45	-16.2	-3.254	10	11.45	1.45	0.9	0.28	30000

Caratteristiche del materiale

(Circolare 7 21-01-19 C8.5.I) Muratura in mattoni pieni e malta di calce LC2_Corti

fb_	fhk	fvk0	fhmedio	τ0	fv0	μ	ϕ	fvk,lim	E	G	FC
120000			172500	9000	20000	0.577	0.767	6500	320000000	128000000	1.2

Verifiche a pressoflessione delle travi in muratura in combinazioni non sismiche

Sezione	γM	N	M	Mu	Comb.	c.s.	Verifica
ini.	3	52	-1343.73	2986.79	SLU 84	2.22	Si
fin.	3	52	1078.12	2986.79	SLU 84	2.77	Si
ini.	3	69	-1306.78	2986.79	SLU 75	2.29	Si
fin.	3	69	1027.71	2986.79	SLU 75	2.91	Si
ini.	3	52	-1421.73	2986.79	SLU 83	2.1	Si
fin.	3	52	1148.52	2986.79	SLU 83	2.6	Si
ini.	3	149	-1311.01	2986.79	SLU 78	2.28	Si
fin.	3	149	1015.34	2986.79	SLU 78	2.94	Si
ini.	3	138	-1270.34	2986.79	SLU 80	2.35	Si
fin.	3	138	989.54	2986.79	SLU 80	3.02	Si
ini.	3	149	-1389	2986.79	SLU 77	2.15	Si
fin.	3	149	1085.75	2986.79	SLU 77	2.75	Si
ini.	3	-27	-1417.5	2986.79	SLU 81	2.11	Si
fin.	3	-27	1160.89	2986.79	SLU 81	2.57	Si
ini.	3	69	-1384.77	2986.79	SLU 74	2.16	Si
fin.	3	69	1098.12	2986.79	SLU 74	2.72	Si
ini.	3	138	-1348.33	2986.79	SLU 79	2.22	Si
fin.	3	138	1059.95	2986.79	SLU 79	2.82	Si
ini.	3	-28	-1339.5	2986.79	SLU 82	2.23	Si
fin.	3	-28	1090.49	2986.79	SLU 82	2.74	Si

Verifiche a taglio delle travi in muratura secondo §C8.7.1.3.1 in combinazioni non sismiche

Sezione	γM	N	M	V	Vt	Vp	Vt fess. diag.	Vt,lim	Comb.	c.s.	Verifica
ini.	3	-27	-1417.5	3996			1575	594	SLU 81	0.15	No
fin.	3	-27	1160.89	1771			1575	594	SLU 81	0.34	No
ini.	3	52	-1421.73	3987			1564	577	SLU 83	0.14	No
fin.	3	52	1148.52	1762			1564	577	SLU 83	0.33	No
ini.	3	138	-1270.34	3564			1564	558	SLU 80	0.16	No
fin.	3	138	989.54	1496			1564	558	SLU 80	0.37	No
ini.	3	149	-1311.01	3637			1564	555	SLU 78	0.15	No
fin.	3	149	1015.34	1570			1564	555	SLU 78	0.35	No
ini.	3	69	-1384.77	3811			1564	573	SLU 74	0.15	No
fin.	3	69	1098.12	1744			1564	573	SLU 74	0.33	No
ini.	3	138	-1348.33	3729			1564	558	SLU 79	0.15	No
fin.	3	138	1059.95	1661			1564	558	SLU 79	0.34	No
ini.	3	-28	-1339.5	3831			1575	594	SLU 82	0.16	No
fin.	3	-28	1090.49	1607			1575	594	SLU 82	0.37	No
ini.	3	52	-1343.73	3822			1564	577	SLU 84	0.15	No
fin.	3	52	1078.12	1597			1564	577	SLU 84	0.36	No
ini.	3	69	-1306.78	3647			1564	573	SLU 75	0.16	No
fin.	3	69	1027.71	1579			1564	573	SLU 75	0.36	No
ini.	3	149	-1389	3802			1564	555	SLU 77	0.15	No

Sezione	γM	N	M	V	Vt	Vp	Vt fess. diag.	Vt,lim	Comb.	c.s.	Verifica
fin.	3	149	1085.75	1735			1564	555	SLU 77	0.32	No

Verifiche a pressoflessione delle travi in muratura in combinazioni sismiche

Sezione	γM	N	M	Mu	Comb.	c.s.	Verifica
ini.	2	2052	-4516.15	4480.18	SLV 16	0.99	No
fin.	2	2106	3589.7	4480.18	SLV 16	1.25	Si
ini.	2	-1523	3682.3	4480.18	SLV 4	1.22	Si
fin.	2	-1532	-3110.6	4480.18	SLV 4	1.44	Si
ini.	2	-360	-3734.63	4480.18	SLV 9	1.2	Si
fin.	2	-426	3274.97	4480.18	SLV 9	1.37	Si
ini.	2	-1523	3682.3	4480.18	SLV 3	1.22	Si
fin.	2	-1532	-3110.6	4480.18	SLV 3	1.44	Si
ini.	2	1516	-5479.81	4480.18	SLV 13	0.82	No
fin.	2	1525	4526.8	4480.18	SLV 13	0.99	No
ini.	2	-2059	2718.63	4480.18	SLV 1	1.65	Si
fin.	2	-2113	-2173.5	4480.18	SLV 1	2.06	Si
ini.	2	-2059	2718.63	4480.18	SLV 2	1.65	Si
fin.	2	-2113	-2173.5	4480.18	SLV 2	2.06	Si
ini.	2	1516	-5479.81	4480.18	SLV 14	0.82	No
fin.	2	1525	4526.8	4480.18	SLV 14	0.99	No
ini.	2	2052	-4516.15	4480.18	SLV 15	0.99	No
fin.	2	2106	3589.7	4480.18	SLV 15	1.25	Si
ini.	2	-360	-3734.63	4480.18	SLV 10	1.2	Si
fin.	2	-426	3274.97	4480.18	SLV 10	1.37	Si

Verifiche a taglio delle travi in muratura secondo §C8.7.1.3.1 in combinazioni sismiche

Sezione	γM	N	M	V	Vt	Vp	Vt fess. diag.	Vt,lim	Comb.	c.s.	Verifica
ini.	2	353	1937.12	-3492			2345	802	SLV 8	0.23	No
fin.	2	419	-1858.77	-4842			2345	786	SLV 8	0.16	No
ini.	2	1516	-5479.81	11901			2345	444	SLV 14	0.04	No
fin.	2	1525	4526.8	10551			2345	440	SLV 14	0.04	No
ini.	2	2052	-4516.15	9833			2345	0	SLV 15	0	No
fin.	2	2106	3589.7	8480			2345	0	SLV 15	0	No
ini.	2	1516	-5479.81	11901			2345	444	SLV 13	0.04	No
fin.	2	1525	4526.8	10551			2345	440	SLV 13	0.04	No
ini.	2	-1523	3682.3	-6955			2955	1168	SLV 3	0.17	No
fin.	2	-1532	-3110.6	-8298			2958	1169	SLV 3	0.14	No
ini.	2	-360	-3734.63	8438			2489	958	SLV 9	0.11	No
fin.	2	-426	3274.97	7095			2516	971	SLV 9	0.14	No
ini.	2	-1523	3682.3	-6955			2955	1168	SLV 4	0.17	No
fin.	2	-1532	-3110.6	-8298			2958	1169	SLV 4	0.14	No
ini.	2	-360	-3734.63	8438			2489	958	SLV 10	0.11	No
fin.	2	-426	3274.97	7095			2516	971	SLV 10	0.14	No
ini.	2	2052	-4516.15	9833			2345	0	SLV 16	0	No
fin.	2	2106	3589.7	8480			2345	0	SLV 16	0	No
ini.	2	353	1937.12	-3492			2345	802	SLV 7	0.23	No
fin.	2	419	-1858.77	-4842			2345	786	SLV 7	0.16	No

Tabella dei coefficienti di sicurezza minimi

Stato limite	Coeff.s.	Comb.	Verifica
PF_SLV	0.818	SLV 13	No
V_SLV	0	SLV 15	No
PF_SLU	2.101	SLU 83	Si
V_SLU	0.145	SLU 83	No

Trave di accoppiamento 116

Verifiche condotte secondo D.M. 17-01-18 (N.T.C.)

Dati geometrici

X ini.	Y ini.	Z ini.inf.	Z ini.sup.	H ini.	X fin.	Y fin.	Z fin.inf.	Z fin.sup	H fin.	Luce	Spessore	R. Trazione
-14.61	-4.784	11.01	11.45	0.44	-16.45	-4.784	11.01	11.45	0.44	1.84	0.3	30000

Caratteristiche del materiale

(Circolare 7 21-01-19 C8.5.I) Muratura in mattoni pieni e malta di calce LC2_Corti

fb_	fhk	fvk0	fhmedio	τ0	fv0	μ	ϕ	fvk,lim	E	G	FC
120000			172500	9000	20000	0.577	0.767	6500	320000000	128000000	1.2

Verifiche a pressoflessione delle travi in muratura in combinazioni non sismiche

Sezione	γM	N	M	Mu	Comb.	c.s.	Verifica
ini.	3	653	-265.94	294.67	SLU 73	1.11	Si
fin.	3	-146	88.65	294.67	SLU 73	3.32	Si
ini.	3	585	-250.8	294.67	SLU 81	1.17	Si
fin.	3	-1	37.19	294.67	SLU 81	7.92	Si
ini.	3	657	-272.33	294.67	SLU 84	1.08	Si
fin.	3	-85	69.51	294.67	SLU 84	4.24	Si
ini.	3	597	-253.55	294.67	SLU 83	1.16	Si
fin.	3	-6	40.67	294.67	SLU 83	7.25	Si
ini.	3	621	-254.92	294.67	SLU 75	1.16	Si
fin.	3	-93	71.37	294.67	SLU 75	4.13	Si
ini.	3	645	-269.58	294.67	SLU 82	1.09	Si
fin.	3	-80	66.03	294.67	SLU 82	4.46	Si
ini.	3	633	-257.67	294.67	SLU 78	1.14	Si
fin.	3	-98	74.85	294.67	SLU 78	3.94	Si
ini.	3	637	-258.92	294.67	SLU 80	1.14	Si
fin.	3	-102	76.38	294.67	SLU 80	3.86	Si
ini.	3	583	-243.39	294.67	SLU 42	1.21	Si

Sezione	γM	N	M	Mu	Comb.	c.s.	Verifica
fin.	3	-70	57.49	294.67	SLU 42	5.13	Si
ini.	3	665	-268.69	294.67	SLU 76	1.1	Si
fin.	3	-150	92.13	294.67	SLU 76	3.2	Si

Verifiche a taglio delle travi in muratura secondo §C8.7.1.3.1 in combinazioni non sismiche

Sezione	γM	N	M	V	Vt	Vp	Vt fess. diag.	Vt,lim	Comb.	c.s.	Verifica
ini.	3	561	-224.3	561			339	0	SLU 57	0	No
fin.	3	-109	76.52	324			368	142	SLU 57	0.44	No
ini.	3	525	-220.18	582			339	0	SLU 62	0	No
fin.	3	-17	42.34	262			343	130	SLU 62	0.5	No
ini.	3	573	-236.21	608			339	0	SLU 61	0	No
fin.	3	-91	67.7	283			363	140	SLU 61	0.49	No
ini.	3	593	-235.32	578			339	0	SLU 55	0	No
fin.	3	-161	93.8	335			382	149	SLU 55	0.45	No
ini.	3	565	-225.55	562			339	0	SLU 59	0	No
fin.	3	-113	78.05	327			369	143	SLU 59	0.44	No
ini.	3	513	-217.43	582			339	0	SLU 60	0	No
fin.	3	-12	38.86	243			342	129	SLU 60	0.53	No
ini.	3	585	-238.96	609			339	0	SLU 63	0	No
fin.	3	-96	71.18	302			365	141	SLU 63	0.47	No
ini.	3	504	-206.76	536			339	0	SLU 58	0	No
fin.	3	-34	49.21	286			348	132	SLU 58	0.46	No
ini.	3	583	-243.39	627			339	0	SLU 42	0	No
fin.	3	-70	57.49	239			358	137	SLU 42	0.57	No
ini.	3	501	-205.52	535			339	0	SLU 56	0	No
fin.	3	-30	47.68	284			347	132	SLU 56	0.46	No

Verifiche a pressoflessione delle travi in muratura in combinazioni sismiche

Sezione	γM	N	M	Mu	Comb.	c.s.	Verifica
ini.	2	1234	-677.6	442.01	SLV 12	0.65	No
fin.	2	-3276	963.25	442.01	SLV 12	0.46	No
ini.	2	-472	258.26	442.01	SLV 9	1.71	Si
fin.	2	2390	-703.73	442.01	SLV 9	0.63	No
ini.	2	-491	367.77	442.01	SLV 6	1.2	Si
fin.	2	3222	-892.43	442.01	SLV 6	0.5	No
ini.	2	1216	-568.09	442.01	SLV 7	0.78	No
fin.	2	-2444	774.55	442.01	SLV 7	0.57	No
ini.	2	659	-477.81	442.01	SLV 16	0.93	No
fin.	2	-2264	599.95	442.01	SLV 16	0.74	No
ini.	2	659	-477.81	442.01	SLV 15	0.93	No
fin.	2	-2264	599.95	442.01	SLV 15	0.74	No
ini.	2	1216	-568.09	442.01	SLV 8	0.78	No
fin.	2	-2444	774.55	442.01	SLV 8	0.57	No
ini.	2	1234	-677.6	442.01	SLV 11	0.65	No
fin.	2	-3276	963.25	442.01	SLV 11	0.46	No
ini.	2	-472	258.26	442.01	SLV 10	1.71	Si
fin.	2	2390	-703.73	442.01	SLV 10	0.63	No
ini.	2	-491	367.77	442.01	SLV 5	1.2	Si
fin.	2	3222	-892.43	442.01	SLV 5	0.5	No

Verifiche a taglio delle travi in muratura secondo §C8.7.1.3.1 in combinazioni sismiche

Sezione	γM	N	M	V	Vt	Vp	Vt fess. diag.	Vt,lim	Comb.	c.s.	Verifica
ini.	2	1234	-677.6	958			508	0	SLV 11	0	No
fin.	2	-3276	963.25	1590			1382	467	SLV 11	0.29	No
ini.	2	84	167.98	126			508	179	SLV 1	1.42	Si
fin.	2	2210	-529.13	-213			508	0	SLV 1	0	No
ini.	2	1216	-568.09	881			508	0	SLV 8	0	No
fin.	2	-2444	774.55	1597			1160	415	SLV 8	0.26	No
ini.	2	-472	258.26	-67			634	251	SLV 9	3.75	Si
fin.	2	2390	-703.73	-1206			508	0	SLV 9	0	No
ini.	2	-491	367.77	-143			639	253	SLV 5	1.76	Si
fin.	2	3222	-892.43	-1200			508	0	SLV 5	0	No
ini.	2	84	167.98	126			508	179	SLV 2	1.42	Si
fin.	2	2210	-529.13	-213			508	0	SLV 2	0	No
ini.	2	-472	258.26	-67			634	251	SLV 10	3.75	Si
fin.	2	2390	-703.73	-1206			508	0	SLV 10	0	No
ini.	2	1216	-568.09	881			508	0	SLV 7	0	No
fin.	2	-2444	774.55	1597			1160	415	SLV 7	0.26	No
ini.	2	-491	367.77	-143			639	253	SLV 6	1.76	Si
fin.	2	3222	-892.43	-1200			508	0	SLV 6	0	No
ini.	2	1234	-677.6	958			508	0	SLV 12	0	No
fin.	2	-3276	963.25	1590			1382	467	SLV 12	0.29	No

Tabella dei coefficienti di sicurezza minimi

Stato limite	Coeff.s.	Comb.	Verifica
PF_SLV	0.459	SLV 11	No
V_SLV	0	SLV 1	No
PF_SLU	1.082	SLU 84	Si
V_SLU	0	SLU 5	No

Trave di accoppiamento 117

Verifiche condotte secondo D.M. 17-01-18 (N.T.C.)

Dati geometrici

X ini.	Y ini.	Z ini.inf.	Z ini.sup.	H ini.	X fin.	Y fin.	Z fin.inf.	Z fin.sup	H fin.	Luce	Spessore	R. Trazione
-18.663	1.046	10	11.45	1.45	-19.463	1.046	10	11.45	1.45	0.8	0.28	30000

Caratteristiche del materiale

(Circolare 7 21-01-19 C8.5.I) Muratura in mattoni pieni e malta di calce LC2_Corti

fb_	fhk	fvk0	fhmedio	τ0	fv0	μ	ϕ	fvk,lim	E	G	FC
120000			172500	9000	20000	0.577	0.767	6500	320000000	128000000	1.2

Verifiche a pressoflessione delle travi in muratura in combinazioni non sismiche

Sezione	γM	N	M	Mu	Comb.	c.s.	Verifica
ini.	3	-944	241.05	2986.79	SLU 41	12.39	Si
fin.	3	-840	64.99	2986.79	SLU 41	45.95	Si
ini.	3	-1018	243.18	2986.79	SLU 39	12.28	Si
fin.	3	-929	70.59	2986.79	SLU 39	42.31	Si
ini.	3	-974	256.68	2986.79	SLU 81	11.64	Si
fin.	3	-869	47.37	2986.79	SLU 81	63.05	Si
ini.	3	-714	211.11	2986.79	SLU 37	14.15	Si
fin.	3	-595	40.79	2986.79	SLU 37	73.23	Si
ini.	3	-786	242.17	2986.79	SLU 74	12.33	Si
fin.	3	-652	21.47	2986.79	SLU 74	139.09	Si
ini.	3	-670	224.61	2986.79	SLU 79	13.3	Si
fin.	3	-535	17.57	2986.79	SLU 79	170.02	Si
ini.	3	-830	228.67	2986.79	SLU 32	13.06	Si
fin.	3	-712	44.69	2986.79	SLU 32	66.83	Si
ini.	3	-900	254.56	2986.79	SLU 83	11.73	Si
fin.	3	-780	41.78	2986.79	SLU 83	71.5	Si
ini.	3	-711	240.05	2986.79	SLU 77	12.44	Si
fin.	3	-563	15.88	2986.79	SLU 77	188.07	Si
ini.	3	-756	226.54	2986.79	SLU 35	13.18	Si
fin.	3	-623	39.1	2986.79	SLU 35	76.39	Si

Verifiche a taglio delle travi in muratura secondo §C8.7.1.3.1 in combinazioni non sismiche

Sezione	γM	N	M	V	Vt	Vp	Vt fess. diag.	Vt,lim	Comb.	c.s.	Verifica
ini.	3	-665	169.86	1054			1829	719	SLU 80	0.68	No
fin.	3	-512	54.07	-2513			1768	691	SLU 80	0.27	No
ini.	3	-711	240.05	915			1848	727	SLU 77	0.79	No
fin.	3	-563	15.88	-2670			1789	700	SLU 77	0.26	No
ini.	3	-409	190.85	723			1727	671	SLU 56	0.93	No
fin.	3	-278	-24.22	-2277			1675	646	SLU 56	0.28	No
ini.	3	-349	175.13	721			1703	660	SLU 69	0.92	No
fin.	3	-200	-27.56	-2214			1644	630	SLU 69	0.28	No
ini.	3	-900	254.56	996			1923	759	SLU 83	0.76	No
fin.	3	-780	41.78	-2749			1876	739	SLU 83	0.27	No
ini.	3	-670	224.61	923			1832	719	SLU 79	0.78	No
fin.	3	-535	17.57	-2626			1778	695	SLU 79	0.26	No
ini.	3	-786	242.17	904			1878	740	SLU 74	0.82	No
fin.	3	-652	21.47	-2598			1824	716	SLU 74	0.28	No
ini.	3	-974	256.68	985			1953	772	SLU 81	0.78	No
fin.	3	-869	47.37	-2677			1911	754	SLU 81	0.28	No
ini.	3	-706	185.29	1046			1846	726	SLU 78	0.69	No
fin.	3	-540	52.38	-2557			1780	696	SLU 78	0.27	No
ini.	3	-894	199.8	1127			1921	758	SLU 84	0.67	No
fin.	3	-757	78.28	-2636			1866	735	SLU 84	0.28	No

Verifiche a pressoflessione delle travi in muratura in combinazioni sismiche

Sezione	γM	N	M	Mu	Comb.	c.s.	Verifica
ini.	2	-539	4781.28	4480.18	SLV 4	0.94	No
fin.	2	-2974	-3417.92	4480.18	SLV 4	1.31	Si
ini.	2	-74	4282.32	4480.18	SLV 7	1.05	Si
fin.	2	-1871	-3071.32	4480.18	SLV 7	1.46	Si
ini.	2	-539	4781.28	4480.18	SLV 3	0.94	No
fin.	2	-2974	-3417.92	4480.18	SLV 3	1.31	Si
ini.	2	-237	-4513.59	4480.18	SLV 13	0.99	No
fin.	2	2353	3402.52	4480.18	SLV 13	1.32	Si
ini.	2	-776	2965.3	4480.18	SLV 2	1.51	Si
fin.	2	-2473	-2072.49	4480.18	SLV 2	2.16	Si
ini.	2	-74	4282.32	4480.18	SLV 8	1.05	Si
fin.	2	-1871	-3071.32	4480.18	SLV 8	1.46	Si
ini.	2	-237	-4513.59	4480.18	SLV 14	0.99	No
fin.	2	2353	3402.52	4480.18	SLV 14	1.32	Si
ini.	2	-702	-4014.63	4480.18	SLV 9	1.12	Si
fin.	2	1249	3055.93	4480.18	SLV 9	1.47	Si
ini.	2	-776	2965.3	4480.18	SLV 1	1.51	Si
fin.	2	-2473	-2072.49	4480.18	SLV 1	2.16	Si
ini.	2	-702	-4014.63	4480.18	SLV 10	1.12	Si
fin.	2	1249	3055.93	4480.18	SLV 10	1.47	Si

Verifiche a taglio delle travi in muratura secondo §C8.7.1.3.1 in combinazioni sismiche

Sezione	γM	N	M	V	Vt	Vp	Vt fess. diag.	Vt,lim	Comb.	c.s.	Verifica
ini.	2	-539	4781.28	-11530			2561	993	SLV 4	0.09	No
fin.	2	-2974	-3417.92	-12150			3535	1386	SLV 4	0.11	No
ini.	2	-539	4781.28	-11530			2561	993	SLV 3	0.09	No
fin.	2	-2974	-3417.92	-12150			3535	1386	SLV 3	0.11	No
ini.	2	-74	4282.32	-10125			2375	899	SLV 7	0.09	No
fin.	2	-1871	-3071.32	-10814			3094	1223	SLV 7	0.11	No
ini.	2	-237	-4513.59	12645			2440	933	SLV 13	0.07	No
fin.	2	2353	3402.52	8946			2345	0	SLV 13	0	No
ini.	2	-237	-4513.59	12645			2440	933	SLV 14	0.07	No
fin.	2	2353	3402.52	8946			2345	0	SLV 14	0	No
ini.	2	-74	4282.32	-10125			2375	899	SLV 8	0.09	No
fin.	2	-1871	-3071.32	-10814			3094	1223	SLV 8	0.11	No
ini.	2	-702	-4014.63	11239			2626	1024	SLV 10	0.09	No
fin.	2	1249	3055.93	7609			2345	547	SLV 10	0.07	No

Sezione	γM	N	M	V	Vt	Vp	Vt fess. diag.	Vt,lim	Comb.	c.s.	Verifica
ini.	2	-1	-2697.61	7993			2346	883	SLV 16	0.11	No
fin.	2	1851	2057.1	4959			2345	262	SLV 16	0.05	No
ini.	2	-1	-2697.61	7993			2346	883	SLV 15	0.11	No
fin.	2	1851	2057.1	4959			2345	262	SLV 15	0.05	No
ini.	2	-702	-4014.63	11239			2626	1024	SLV 9	0.09	No
fin.	2	1249	3055.93	7609			2345	547	SLV 9	0.07	No

Tabella dei coefficienti di sicurezza minimi

Stato limite	Coeff.s.	Comb.	Verifica
PF_SLV	0.937	SLV 3	No
V_SLV	0	SLV 13	No
PF_SLU	11.636	SLU 81	Si
V_SLU	0.262	SLU 77	No

Trave di accoppiamento 118

Verifiche condotte secondo D.M. 17-01-18 (N.T.C.)

Dati geometrici

X ini.	Y ini.	Z ini.inf.	Z ini.sup.	H ini.	X fin.	Y fin.	Z fin.inf.	Z fin.sup	H fin.	Luce	Spessore	R. Trazione
-12.543	1.046	10	11.45	1.45	-13.543	1.046	10	11.45	1.45	1	0.28	30000

Caratteristiche del materiale

(Circolare 7 21-01-19 C8.5.I) Muratura in mattoni pieni e malta di calce LC2_Corti

fb_	fhk	fvk0	fhmedio	τ0	fv0	μ	ϕ	fvk,lim	E	G	FC
120000			172500	9000	20000	0.577	0.767	6500	320000000	128000000	1.2

Verifiche a pressoflessione delle travi in muratura in combinazioni non sismiche

Sezione	γM	N	M	Mu	Comb.	c.s.	Verifica
ini.	3	-1421	768.74	2986.79	SLU 77	3.89	Si
fin.	3	-1421	97.42	2986.79	SLU 77	30.66	Si
ini.	3	-1506	781.84	2986.79	SLU 78	3.82	Si
fin.	3	-1506	98.16	2986.79	SLU 78	30.43	Si
ini.	3	-1302	733.75	2986.79	SLU 83	4.07	Si
fin.	3	-1302	34.47	2986.79	SLU 83	86.66	Si
ini.	3	-1387	746.85	2986.79	SLU 84	4	Si
fin.	3	-1387	35.2	2986.79	SLU 84	84.85	Si
ini.	3	-1340	728.26	2986.79	SLU 75	4.1	Si
fin.	3	-1340	47.96	2986.79	SLU 75	62.28	Si
ini.	3	-1256	715.16	2986.79	SLU 74	4.18	Si
fin.	3	-1256	47.22	2986.79	SLU 74	63.25	Si
ini.	3	-1380	757.46	2986.79	SLU 79	3.94	Si
fin.	3	-1380	105.73	2986.79	SLU 79	28.25	Si
ini.	3	-1355	725.71	2986.79	SLU 76	4.12	Si
fin.	3	-1355	56.75	2986.79	SLU 76	52.63	Si
ini.	3	-1464	770.56	2986.79	SLU 80	3.88	Si
fin.	3	-1464	106.46	2986.79	SLU 80	28.05	Si
ini.	3	-1303	722.28	2986.79	SLU 57	4.14	Si
fin.	3	-1303	117.32	2986.79	SLU 57	25.46	Si

Verifiche a taglio delle travi in muratura secondo §C8.7.1.3.1 in combinazioni non sismiche

Sezione	γM	N	M	V	Vt	Vp	Vt fess. diag.	Vt,lim	Comb.	c.s.	Verifica
ini.	3	-1387	746.85	209			2118	837	SLU 84	4.01	Si
fin.	3	-1387	35.2	-1576			2118	837	SLU 84	0.53	No
ini.	3	-1189	672.13	200			2039	807	SLU 73	4.04	Si
fin.	3	-1189	6.55	-1475			2039	807	SLU 73	0.55	No
ini.	3	-1256	715.16	197			2066	817	SLU 74	4.14	Si
fin.	3	-1256	47.22	-1477			2066	817	SLU 74	0.55	No
ini.	3	-1340	728.26	185			2100	830	SLU 75	4.49	Si
fin.	3	-1340	47.96	-1489			2100	830	SLU 75	0.56	No
ini.	3	-1355	725.71	196			2106	832	SLU 76	4.24	Si
fin.	3	-1355	56.75	-1478			2106	832	SLU 76	0.56	No
ini.	3	-1018	633.71	199			1971	779	SLU 61	3.91	Si
fin.	3	-1018	4.16	-1400			1971	779	SLU 61	0.56	No
ini.	3	-1221	693.27	212			2052	812	SLU 82	3.82	Si
fin.	3	-1221	-15	-1573			2052	812	SLU 82	0.52	No
ini.	3	-1302	733.75	221			2084	824	SLU 83	3.73	Si
fin.	3	-1302	34.47	-1564			2084	824	SLU 83	0.53	No
ini.	3	-1137	680.17	225			2018	798	SLU 81	3.55	Si
fin.	3	-1137	-15.73	-1560			2018	798	SLU 81	0.51	No
ini.	3	-933	620.61	211			1937	765	SLU 60	3.62	Si
fin.	3	-933	3.43	-1388			1937	765	SLU 60	0.55	No

Verifiche a pressoflessione delle travi in muratura in combinazioni sismiche

Sezione	γM	N	M	Mu	Comb.	c.s.	Verifica
ini.	2	-2720	-721.37	4480.18	SLV 3	6.21	Si
fin.	2	-3002	-6728.05	4480.18	SLV 3	0.67	No
ini.	2	-1639	-844.86	4480.18	SLV 2	5.3	Si
fin.	2	-1786	-6852.81	4480.18	SLV 2	0.65	No
ini.	2	1395	1628.26	4480.18	SLV 14	2.75	Si
fin.	2	1677	6792.19	4480.18	SLV 14	0.66	No
ini.	2	-1639	-844.86	4480.18	SLV 1	5.3	Si
fin.	2	-1786	-6852.81	4480.18	SLV 1	0.65	No
ini.	2	1395	1628.26	4480.18	SLV 13	2.75	Si
fin.	2	1677	6792.19	4480.18	SLV 13	0.66	No
ini.	2	-2720	-721.37	4480.18	SLV 4	6.21	Si
fin.	2	-3002	-6728.05	4480.18	SLV 4	0.67	No

Sezione	γM	N	M	Mu	Comb.	c.s.	Verifica
ini.	2	314	1751.74	4480.18	SLV 16	2.56	Si
fin.	2	461	6916.95	4480.18	SLV 16	0.65	No
ini.	2	314	1751.74	4480.18	SLV 15	2.56	Si
fin.	2	461	6916.95	4480.18	SLV 15	0.65	No
ini.	2	-2010	1030.22	4480.18	SLV 12	4.35	Si
fin.	2	-2170	2286.75	4480.18	SLV 12	1.96	Si
ini.	2	-2010	1030.22	4480.18	SLV 11	4.35	Si
fin.	2	-2170	2286.75	4480.18	SLV 11	1.96	Si

Verifiche a taglio delle travi in muratura secondo §C8.7.1.3.1 in combinazioni sismiche

Sezione	γM	N	M	V	Vt	Vp	Vt fess. diag.	Vt,lim	Comb.	c.s.	Verifica
ini.	2	1595	618.6	1886			2345	409	SLV 9	0.22	No
fin.	2	1884	1870.89	728			2345	237	SLV 9	0.33	No
ini.	2	1395	1628.26	5805			2345	493	SLV 14	0.09	No
fin.	2	1677	6792.19	4700			2345	368	SLV 14	0.08	No
ini.	2	-1639	-844.86	-5461			3001	1187	SLV 1	0.22	No
fin.	2	-1786	-6852.81	-6628			3060	1210	SLV 1	0.18	No
ini.	2	314	1751.74	5784			2345	811	SLV 16	0.14	No
fin.	2	461	6916.95	4706			2345	776	SLV 16	0.16	No
ini.	2	1595	618.6	1886			2345	409	SLV 10	0.22	No
fin.	2	1884	1870.89	728			2345	237	SLV 10	0.33	No
ini.	2	1395	1628.26	5805			2345	493	SLV 13	0.09	No
fin.	2	1677	6792.19	4700			2345	368	SLV 13	0.08	No
ini.	2	-2720	-721.37	-5482			3434	1350	SLV 3	0.25	No
fin.	2	-3002	-6728.05	-6621			3546	1390	SLV 3	0.21	No
ini.	2	-2720	-721.37	-5482			3434	1350	SLV 4	0.25	No
fin.	2	-3002	-6728.05	-6621			3546	1390	SLV 4	0.21	No
ini.	2	314	1751.74	5784			2345	811	SLV 15	0.14	No
fin.	2	461	6916.95	4706			2345	776	SLV 15	0.16	No
ini.	2	-1639	-844.86	-5461			3001	1187	SLV 2	0.22	No
fin.	2	-1786	-6852.81	-6628			3060	1210	SLV 2	0.18	No

Tabella dei coefficienti di sicurezza minimi

Stato limite	Coeff.s.	Comb.	Verifica
PF_SLV	0.648	SLV 15	No
V_SLV	0.078	SLV 13	No
PF_SLU	3.82	SLU 78	Si
V_SLU	0.512	SLU 81	No

Trave di accoppiamento 119

Verifiche condotte secondo D.M. 17-01-18 (N.T.C.)

Dati geometrici

X ini.	Y ini.	Z ini.inf.	Z ini.sup.	H ini.	X fin.	Y fin.	Z fin.inf.	Z fin.sup	H fin.	Luce	Spessore	R. Trazione
-11.163	1.046	10.4	11.45	1.05	-12.283	1.046	10.4	11.45	1.05	1.12	0.28	30000

Caratteristiche del materiale

(Circolare 7 21-01-19 C8.5.I) Muratura in mattoni pieni e malta di calce LC2_Corti

fb_	fhk	fvk0	fhmedio	τ0	fv0	μ	ϕ	fvk,lim	E	G	FC
120000			172500	9000	20000	0.577	0.767	6500	320000000	128000000	1.2

Verifiche a pressoflessione delle travi in muratura in combinazioni non sismiche

Sezione	γM	N	M	Mu	Comb.	c.s.	Verifica
ini.	3	-1373	-889.61	1566.2	SLU 79	1.76	Si
fin.	3	-1373	534.29	1566.2	SLU 79	2.93	Si
ini.	3	-1457	-888.75	1566.2	SLU 80	1.76	Si
fin.	3	-1457	532.1	1566.2	SLU 80	2.94	Si
ini.	3	-1249	-841.16	1566.2	SLU 74	1.86	Si
fin.	3	-1249	516.1	1566.2	SLU 74	3.03	Si
ini.	3	-1415	-888.92	1566.2	SLU 77	1.76	Si
fin.	3	-1415	540.61	1566.2	SLU 77	2.9	Si
ini.	3	-1499	-888.06	1566.2	SLU 78	1.76	Si
fin.	3	-1499	538.42	1566.2	SLU 78	2.91	Si
ini.	3	-1295	-882.29	1566.2	SLU 83	1.78	Si
fin.	3	-1295	527.24	1566.2	SLU 83	2.97	Si
ini.	3	-1129	-834.53	1566.2	SLU 81	1.88	Si
fin.	3	-1129	502.73	1566.2	SLU 81	3.12	Si
ini.	3	-1333	-840.3	1566.2	SLU 75	1.86	Si
fin.	3	-1333	513.91	1566.2	SLU 75	3.05	Si
ini.	3	-1347	-840.41	1566.2	SLU 76	1.86	Si
fin.	3	-1347	506.13	1566.2	SLU 76	3.09	Si
ini.	3	-1379	-881.43	1566.2	SLU 84	1.78	Si
fin.	3	-1379	525.04	1566.2	SLU 84	2.98	Si

Verifiche a taglio delle travi in muratura secondo §C8.7.1.3.1 in combinazioni non sismiche

Sezione	γM	N	M	V	Vt	Vp	Vt fess. diag.	Vt,lim	Comb.	c.s.	Verifica
ini.	3	-1213	-833.67	2210			1516	598	SLU 82	0.27	No
fin.	3	-1213	500.54	117			1516	598	SLU 82	5.12	Si
ini.	3	-1129	-834.53	2213			1485	586	SLU 81	0.26	No
fin.	3	-1129	502.73	120			1485	586	SLU 81	4.9	Si
ini.	3	-926	-747.11	1969			1409	557	SLU 60	0.28	No
fin.	3	-926	471.67	155			1409	557	SLU 60	3.59	Si
ini.	3	-1373	-889.61	2203			1576	619	SLU 79	0.28	No
fin.	3	-1373	534.29	286			1576	619	SLU 79	2.17	Si
ini.	3	-1295	-882.29	2277			1547	609	SLU 83	0.27	No
fin.	3	-1295	527.24	184			1547	609	SLU 83	3.31	Si

Sezione	γM	N	M	V	Vt	Vp	Vt fess. diag.	Vt,lim	Comb.	c.s.	Verifica
ini.	3	-1379	-881.43	2275			1579	620	SLU 84	0.27	No
fin.	3	-1379	525.04	181			1579	620	SLU 84	3.42	Si
ini.	3	-1415	-888.92	2208			1592	624	SLU 77	0.28	No
fin.	3	-1415	540.61	291			1592	624	SLU 77	2.15	Si
ini.	3	-1249	-841.16	2144			1530	602	SLU 74	0.28	No
fin.	3	-1249	516.1	226			1530	602	SLU 74	2.66	Si
ini.	3	-1457	-888.75	2200			1608	630	SLU 80	0.29	No
fin.	3	-1457	532.1	283			1608	630	SLU 80	2.23	Si
ini.	3	-1092	-794.87	2033			1471	581	SLU 62	0.29	No
fin.	3	-1092	496.17	220			1471	581	SLU 62	2.64	Si

Verifiche a pressoflessione delle travi in muratura in combinazioni sismiche

Sezione	γM	N	M	Mu	Comb.	c.s.	Verifica
ini.	2	927	-5434.79	2349.3	SLV 13	0.43	No
fin.	2	1093	1337.29	2349.3	SLV 13	1.76	Si
ini.	2	1723	-2171.33	2349.3	SLV 10	1.08	Si
fin.	2	1467	753.19	2349.3	SLV 10	3.12	Si
ini.	2	-2241	4342.82	2349.3	SLV 4	0.54	No
fin.	2	-2407	-643.73	2349.3	SLV 4	3.65	Si
ini.	2	927	-5434.79	2349.3	SLV 14	0.43	No
fin.	2	1093	1337.29	2349.3	SLV 14	1.76	Si
ini.	2	-985	4238.18	2349.3	SLV 1	0.55	No
fin.	2	-1353	-571.68	2349.3	SLV 1	4.11	Si
ini.	2	1723	-2171.33	2349.3	SLV 9	1.08	Si
fin.	2	1467	753.19	2349.3	SLV 9	3.12	Si
ini.	2	-329	-5330.15	2349.3	SLV 16	0.44	No
fin.	2	38	1265.25	2349.3	SLV 16	1.86	Si
ini.	2	-2241	4342.82	2349.3	SLV 3	0.54	No
fin.	2	-2407	-643.73	2349.3	SLV 3	3.65	Si
ini.	2	-329	-5330.15	2349.3	SLV 15	0.44	No
fin.	2	38	1265.25	2349.3	SLV 15	1.86	Si
ini.	2	-985	4238.18	2349.3	SLV 2	0.55	No
fin.	2	-1353	-571.68	2349.3	SLV 2	4.11	Si

Verifiche a taglio delle travi in muratura secondo §C8.7.1.3.1 in combinazioni sismiche

Sezione	γM	N	M	V	Vt	Vp	Vt fess. diag.	Vt,lim	Comb.	c.s.	Verifica
ini.	2	1723	-2171.33	3578			1592	0	SLV 10	0	No
fin.	2	1467	753.19	2128			1592	25	SLV 10	0.01	No
ini.	2	-2241	4342.82	-4070			2433	952	SLV 4	0.23	No
fin.	2	-2407	-643.73	-5183			2495	973	SLV 4	0.19	No
ini.	2	-985	4238.18	-3703			1962	774	SLV 2	0.21	No
fin.	2	-1353	-571.68	-4951			2100	830	SLV 2	0.17	No
ini.	2	-2241	4342.82	-4070			2433	952	SLV 3	0.23	No
fin.	2	-2407	-643.73	-5183			2495	973	SLV 3	0.19	No
ini.	2	927	-5434.79	6840			1592	364	SLV 14	0.05	No
fin.	2	1093	1337.29	5524			1592	303	SLV 14	0.05	No
ini.	2	-985	4238.18	-3703			1962	774	SLV 1	0.21	No
fin.	2	-1353	-571.68	-4951			2100	830	SLV 1	0.17	No
ini.	2	1723	-2171.33	3578			1592	0	SLV 9	0	No
fin.	2	1467	753.19	2128			1592	25	SLV 9	0.01	No
ini.	2	927	-5434.79	6840			1592	364	SLV 13	0.05	No
fin.	2	1093	1337.29	5524			1592	303	SLV 13	0.05	No
ini.	2	-329	-5330.15	6473			1716	663	SLV 16	0.1	No
fin.	2	38	1265.25	5292			1592	591	SLV 16	0.11	No
ini.	2	-329	-5330.15	6473			1716	663	SLV 15	0.1	No
fin.	2	38	1265.25	5292			1592	591	SLV 15	0.11	No

Tabella dei coefficienti di sicurezza minimi

Stato limite	Coeff.s.	Comb.	Verifica
PF_SLV	0.432	SLV 13	No
V_SLV	0	SLV 9	No
PF_SLU	1.761	SLU 79	Si
V_SLU	0.265	SLU 81	No

Trave di accoppiamento 120

Verifiche condotte secondo D.M. 17-01-18 (N.T.C.)

Dati geometrici

X ini.	Y ini.	Z ini.inf.	Z ini.sup.	H ini.	X fin.	Y fin.	Z fin.inf.	Z fin.sup	H fin.	Luce	Spessore	R. Trazione
-4.168	1.046	10	11.45	1.45	-4.968	1.046	10	11.45	1.45	0.8	0.28	30000

Caratteristiche del materiale

(Circolare 7 21-01-19 C8.5.I) Muratura in mattoni pieni e malta di calce LC2_Corti

fb_	fhk	fvk0	fhmedio	τ0	fv0	μ	ϕ	fvk,lim	E	G	FC
120000			172500	9000	20000	0.577	0.767	6500	320000000	128000000	1.2

Verifiche a pressoflessione delle travi in muratura in combinazioni non sismiche

Sezione	γM	N	M	Mu	Comb.	c.s.	Verifica
ini.	3	-308	40.22	2986.79	SLU 79	74.26	Si
fin.	3	-120	268.48	2986.79	SLU 79	11.12	Si
ini.	3	-331	40.31	2986.79	SLU 35	74.1	Si
fin.	3	-177	250.13	2986.79	SLU 35	11.94	Si
ini.	3	-108	15.76	2986.79	SLU 69	189.56	Si
fin.	3	98	254.47	2986.79	SLU 69	11.74	Si
ini.	3	-286	65.56	2986.79	SLU 78	45.55	Si
fin.	3	-145	256.45	2986.79	SLU 78	11.65	Si

Sezione	γM	N	M	Mu	Comb.	c.s.	Verifica
ini.	3	-210	87.17	2986.79	SLU 74	34.26	Si
fin.	3	-119	246.5	2986.79	SLU 74	12.12	Si
ini.	3	-319	91.11	2986.79	SLU 83	32.78	Si
fin.	3	-224	248.41	2986.79	SLU 83	12.02	Si
ini.	3	-267	51.69	2986.79	SLU 77	57.79	Si
fin.	3	-99	275.63	2986.79	SLU 77	10.84	Si
ini.	3	-372	28.84	2986.79	SLU 37	103.56	Si
fin.	3	-198	242.98	2986.79	SLU 37	12.29	Si
ini.	3	-149	4.29	2986.79	SLU 71	696.22	Si
fin.	3	77	247.32	2986.79	SLU 71	12.08	Si
ini.	3	-327	54.1	2986.79	SLU 80	55.21	Si
fin.	3	-166	249.31	2986.79	SLU 80	11.98	Si

Verifiche a taglio delle travi in muratura secondo §C8.7.1.3.1 in combinazioni non sismiche

Sezione	γM	N	M	V	Vt	Vp	Vt fess. diag.	Vt,lim	Comb.	c.s.	Verifica
ini.	3	-108	15.76	2624			1607	611	SLU 69	0.23	No
fin.	3	98	254.47	-2106			1564	567	SLU 69	0.27	No
ini.	3	-267	51.69	2791			1670	644	SLU 77	0.23	No
fin.	3	-99	275.63	-2442			1603	610	SLU 77	0.25	No
ini.	3	-127	29.63	2556			1614	615	SLU 70	0.24	No
fin.	3	52	235.3	-2171			1564	577	SLU 70	0.27	No
ini.	3	-149	4.29	2583			1623	620	SLU 71	0.24	No
fin.	3	77	247.32	-1999			1564	571	SLU 71	0.29	No
ini.	3	-121	39.57	2516			1612	614	SLU 56	0.24	No
fin.	3	42	238.97	-2170			1564	579	SLU 56	0.27	No
ini.	3	-286	65.56	2723			1678	648	SLU 78	0.24	No
fin.	3	-145	256.45	-2508			1622	619	SLU 78	0.25	No
ini.	3	38	3.64	2350			1564	580	SLU 48	0.25	No
fin.	3	238	217.81	-1833			1564	534	SLU 48	0.29	No
ini.	3	-229	101.05	2489			1655	636	SLU 75	0.26	No
fin.	3	-165	227.32	-2547			1630	623	SLU 75	0.24	No
ini.	3	-327	54.1	2681			1694	656	SLU 80	0.24	No
fin.	3	-166	249.31	-2401			1630	623	SLU 80	0.26	No
ini.	3	-308	40.22	2749			1687	652	SLU 79	0.24	No
fin.	3	-120	268.48	-2336			1611	614	SLU 79	0.26	No

Verifiche a pressoflessione delle travi in muratura in combinazioni sismiche

Sezione	γM	N	M	Mu	Comb.	c.s.	Verifica
ini.	2	-1188	-1442.1	4480.18	SLV 16	3.11	Si
fin.	2	1151	1466.81	4480.18	SLV 16	3.05	Si
ini.	2	1508	1744.47	4480.18	SLV 4	2.57	Si
fin.	2	-751	-968.27	4480.18	SLV 4	4.63	Si
ini.	2	221	-126.86	4480.18	SLV 11	35.32	Si
fin.	2	944	861.52	4480.18	SLV 11	5.2	Si
ini.	2	-1588	-1613.47	4480.18	SLV 14	2.78	Si
fin.	2	758	1255.1	4480.18	SLV 14	3.57	Si
ini.	2	1108	1573.09	4480.18	SLV 1	2.85	Si
fin.	2	-1145	-1179.97	4480.18	SLV 1	3.8	Si
ini.	2	1508	1744.47	4480.18	SLV 3	2.57	Si
fin.	2	-751	-968.27	4480.18	SLV 3	4.63	Si
ini.	2	221	-126.86	4480.18	SLV 12	35.32	Si
fin.	2	944	861.52	4480.18	SLV 12	5.2	Si
ini.	2	1108	1573.09	4480.18	SLV 2	2.85	Si
fin.	2	-1145	-1179.97	4480.18	SLV 2	3.8	Si
ini.	2	-1588	-1613.47	4480.18	SLV 13	2.78	Si
fin.	2	758	1255.1	4480.18	SLV 13	3.57	Si
ini.	2	-1188	-1442.1	4480.18	SLV 15	3.11	Si
fin.	2	1151	1466.81	4480.18	SLV 15	3.05	Si

Verifiche a taglio delle travi in muratura secondo §C8.7.1.3.1 in combinazioni sismiche

Sezione	γM	N	M	V	Vt	Vp	Vt fess. diag.	Vt,lim	Comb.	c.s.	Verifica
ini.	2	-1188	-1442.1	7759			2821	1111	SLV 15	0.14	No
fin.	2	1151	1466.81	4072			2345	581	SLV 15	0.14	No
ini.	2	-1588	-1613.47	7249			2980	1178	SLV 14	0.16	No
fin.	2	758	1255.1	4045			2345	699	SLV 14	0.17	No
ini.	2	1108	1573.09	-4531			2345	595	SLV 2	0.13	No
fin.	2	-1145	-1179.97	-7342			2803	1104	SLV 2	0.15	No
ini.	2	-1188	-1442.1	7759			2821	1111	SLV 16	0.14	No
fin.	2	1151	1466.81	4072			2345	581	SLV 16	0.14	No
ini.	2	1508	1744.47	-4021			2345	448	SLV 4	0.11	No
fin.	2	-751	-968.27	-7314			2646	1033	SLV 4	0.14	No
ini.	2	221	-126.86	4232			2345	833	SLV 11	0.2	No
fin.	2	944	861.52	119			2345	645	SLV 11	5.44	Si
ini.	2	1108	1573.09	-4531			2345	595	SLV 1	0.13	No
fin.	2	-1145	-1179.97	-7342			2803	1104	SLV 1	0.15	No
ini.	2	221	-126.86	4232			2345	833	SLV 12	0.2	No
fin.	2	944	861.52	119			2345	645	SLV 12	5.44	Si
ini.	2	1508	1744.47	-4021			2345	448	SLV 3	0.11	No
fin.	2	-751	-968.27	-7314			2646	1033	SLV 3	0.14	No
ini.	2	-1588	-1613.47	7249			2980	1178	SLV 13	0.16	No
fin.	2	758	1255.1	4045			2345	699	SLV 13	0.17	No

Tabella dei coefficienti di sicurezza minimi

Stato limite	Coeff.s.	Comb.	Verifica
PF_SLV	2.568	SLV 3	Si
V_SLV	0.111	SLV 3	No
PF_SLU	10.836	SLU 77	Si
V_SLU	0.231	SLU 77	No

Trave di accoppiamento 121

Verifiche condotte secondo D.M. 17-01-18 (N.T.C.)

Dati geometrici

X ini.	Y ini.	Z ini.inf.	Z ini.sup.	H ini.	X fin.	Y fin.	Z fin.inf.	Z fin.sup	H fin.	Luce	Spessore	R. Trazione
-11.093	3.334	10	11.45	1.45	-11.893	3.334	10	11.45	1.45	0.8	0.14	30000

Caratteristiche del materiale

(Circolare 7 21-01-19 C8.5.I) Muratura in mattoni pieni e malta di calce LC2_Corti

fb_	fhk	fvk0	fhmedio	τ0	fv0	μ	ϕ	fvk,lim	E	G	FC
120000			172500	9000	20000	0.577	0.767	6500	320000000	128000000	1.2

Verifiche a pressoflessione delle travi in muratura in combinazioni non sismiche

Sezione	γM	N	M	Mu	Comb.	c.s.	Verifica
ini.	3	-2025	-25.87	1493.39	SLU 75	57.72	Si
fin.	3	-2025	1185.42	1493.39	SLU 75	1.26	Si
ini.	3	-2024	-23.59	1493.39	SLU 77	63.31	Si
fin.	3	-2024	1189.9	1493.39	SLU 77	1.26	Si
ini.	3	-2186	-30.08	1493.39	SLU 81	49.65	Si
fin.	3	-2186	1220.3	1493.39	SLU 81	1.22	Si
ini.	3	-2186	-27.74	1493.39	SLU 83	53.84	Si
fin.	3	-2186	1225.23	1493.39	SLU 83	1.22	Si
ini.	3	-2025	-25.93	1493.39	SLU 74	57.59	Si
fin.	3	-2025	1184.96	1493.39	SLU 74	1.26	Si
ini.	3	-2187	-30.02	1493.39	SLU 82	49.75	Si
fin.	3	-2187	1220.75	1493.39	SLU 82	1.22	Si
ini.	3	-2186	-27.68	1493.39	SLU 84	53.96	Si
fin.	3	-2186	1225.69	1493.39	SLU 84	1.22	Si
ini.	3	-2040	-8.98	1493.39	SLU 41	166.25	Si
fin.	3	-2040	1143.57	1493.39	SLU 41	1.31	Si
ini.	3	-2041	-8.92	1493.39	SLU 42	167.35	Si
fin.	3	-2041	1144.02	1493.39	SLU 42	1.31	Si
ini.	3	-2025	-23.53	1493.39	SLU 78	63.47	Si
fin.	3	-2025	1190.36	1493.39	SLU 78	1.25	Si

Verifiche a taglio delle travi in muratura secondo §C8.7.1.3.1 in combinazioni non sismiche

Sezione	γM	N	M	V	Vt	Vp	Vt fess. diag.	Vt,lim	Comb.	c.s.	Verifica
ini.	3	-2187	-30.02	2155			1656	605	SLU 82	0.28	No
fin.	3	-2187	1220.75	944			1656	605	SLU 82	0.64	No
ini.	3	-2024	-23.59	2059			1592	588	SLU 77	0.29	No
fin.	3	-2024	1189.9	947			1592	588	SLU 77	0.62	No
ini.	3	-1981	-33.37	1982			1574	583	SLU 80	0.29	No
fin.	3	-1981	1117.96	870			1574	583	SLU 80	0.67	No
ini.	3	-2186	-30.08	2155			1656	605	SLU 81	0.28	No
fin.	3	-2186	1220.3	944			1656	605	SLU 81	0.64	No
ini.	3	-2186	-27.74	2158			1656	605	SLU 83	0.28	No
fin.	3	-2186	1225.23	947			1656	605	SLU 83	0.64	No
ini.	3	-1980	-33.43	1981			1574	583	SLU 79	0.29	No
fin.	3	-1980	1117.5	869			1574	583	SLU 79	0.67	No
ini.	3	-2025	-23.53	2060			1592	588	SLU 78	0.29	No
fin.	3	-2025	1190.36	948			1592	588	SLU 78	0.62	No
ini.	3	-2025	-25.87	2057			1592	588	SLU 75	0.29	No
fin.	3	-2025	1185.42	944			1592	588	SLU 75	0.62	No
ini.	3	-2186	-27.68	2159			1656	605	SLU 84	0.28	No
fin.	3	-2186	1225.69	948			1656	605	SLU 84	0.64	No
ini.	3	-2025	-25.93	2056			1592	588	SLU 74	0.29	No
fin.	3	-2025	1184.96	944			1592	588	SLU 74	0.62	No

Verifiche a pressoflessione delle travi in muratura in combinazioni sismiche

Sezione	γM	N	M	Mu	Comb.	c.s.	Verifica
ini.	2	1358	1062.47	2240.09	SLV 1	2.11	Si
fin.	2	1156	-2288.27	2240.09	SLV 1	0.98	No
ini.	2	-2735	-1089.29	2240.09	SLV 14	2.06	Si
fin.	2	-2537	3018.77	2240.09	SLV 14	0.74	No
ini.	2	-3764	-1144.23	2240.09	SLV 16	1.96	Si
fin.	2	-3561	3637.44	2240.09	SLV 16	0.62	No
ini.	2	-3530	-455.21	2240.09	SLV 11	4.92	Si
fin.	2	-3464	2501.76	2240.09	SLV 11	0.9	No
ini.	2	1358	1062.47	2240.09	SLV 2	2.11	Si
fin.	2	1156	-2288.27	2240.09	SLV 2	0.98	No
ini.	2	-3530	-455.21	2240.09	SLV 12	4.92	Si
fin.	2	-3464	2501.76	2240.09	SLV 12	0.9	No
ini.	2	-3764	-1144.23	2240.09	SLV 15	1.96	Si
fin.	2	-3561	3637.44	2240.09	SLV 15	0.62	No
ini.	2	-2735	-1089.29	2240.09	SLV 13	2.06	Si
fin.	2	-2537	3018.77	2240.09	SLV 13	0.74	No
ini.	2	330	1007.53	2240.09	SLV 4	2.22	Si
fin.	2	132	-1669.6	2240.09	SLV 4	1.34	Si
ini.	2	330	1007.53	2240.09	SLV 3	2.22	Si
fin.	2	132	-1669.6	2240.09	SLV 3	1.34	Si

Verifiche a taglio delle travi in muratura secondo §C8.7.1.3.1 in combinazioni sismiche

Sezione	γM	N	M	V	Vt	Vp	Vt fess. diag.	Vt,lim	Comb.	c.s.	Verifica
ini.	2	-3764	-1144.23	6379			2678	958	SLV 16	0.15	No
fin.	2	-3561	3637.44	5718			2597	937	SLV 16	0.16	No
ini.	2	330	1007.53	-3068			1173	362	SLV 4	0.12	No
fin.	2	132	-1669.6	-3812			1173	412	SLV 4	0.11	No
ini.	2	330	1007.53	-3068			1173	362	SLV 3	0.12	No
fin.	2	132	-1669.6	-3812			1173	412	SLV 3	0.11	No

Sezione	γM	N	M	V	Vt	Vp	Vt fess. diag.	Vt,lim	Comb.	c.s.	Verifica
ini.	2	1358	1062.47	-3912			1173	0	SLV 2	0	No
fin.	2	1156	-2288.27	-4651			1173	0	SLV 2	0	No
ini.	2	-2735	-1089.29	5535			2267	848	SLV 13	0.15	No
fin.	2	-2537	3018.77	4879			2187	826	SLV 13	0.17	No
ini.	2	1358	1062.47	-3912			1173	0	SLV 1	0	No
fin.	2	1156	-2288.27	-4651			1173	0	SLV 1	0	No
ini.	2	1125	373.45	-1590			1173	0	SLV 5	0	No
fin.	2	1059	-1152.59	-2295			1173	0	SLV 5	0	No
ini.	2	-2735	-1089.29	5535			2267	848	SLV 14	0.15	No
fin.	2	-2537	3018.77	4879			2187	826	SLV 14	0.17	No
ini.	2	-3764	-1144.23	6379			2678	958	SLV 15	0.15	No
fin.	2	-3561	3637.44	5718			2597	937	SLV 15	0.16	No
ini.	2	1125	373.45	-1590			1173	0	SLV 6	0	No
fin.	2	1059	-1152.59	-2295			1173	0	SLV 6	0	No

Tabella dei coefficienti di sicurezza minimi

Stato limite	Coeff.s.	Comb.	Verifica
PF_SLV	0.616	SLV 15	No
V_SLV	0	SLV 1	No
PF_SLU	1.218	SLU 84	Si
V_SLU	0.28	SLU 84	No

Trave di accoppiamento 122

Verifiche condotte secondo D.M. 17-01-18 (N.T.C.)

Dati geometrici

X ini.	Y ini.	Z ini.inf.	Z ini.sup.	H ini.	X fin.	Y fin.	Z fin.inf.	Z fin.sup	H fin.	Luce	Spessore	R. Trazione
-17.796	6.536	7.9	8.8	0.9	-16.796	6.536	7.9	8.8	0.9	1	0.28	30000

Caratteristiche del materiale

(Circolare 7 21-01-19 C8.5.I) Muratura in mattoni pieni e malta di calce LC2_Corti

fb_	fhk	fvk0	fhmedio	τ0	fv0	μ	ϕ	fvk,lim	E	G	FC
120000			172500	9000	20000	0.577	0.767	6500	320000000	128000000	1.2

Verifiche a pressoflessione delle travi in muratura in combinazioni non sismiche

Sezione	γM	N	M	Mu	Comb.	c.s.	Verifica
ini.	3	321	-118.86	1150.68	SLU 79	9.68	Si
fin.	3	-692	310.29	1150.68	SLU 79	3.71	Si
ini.	3	325	-116.97	1150.68	SLU 77	9.84	Si
fin.	3	-687	311.02	1150.68	SLU 77	3.7	Si
ini.	3	273	-97.34	1150.68	SLU 76	11.82	Si
fin.	3	-620	288.55	1150.68	SLU 76	3.99	Si
ini.	3	328	-115.96	1150.68	SLU 78	9.92	Si
fin.	3	-678	309.85	1150.68	SLU 78	3.71	Si
ini.	3	323	-117.86	1150.68	SLU 80	9.76	Si
fin.	3	-683	309.12	1150.68	SLU 80	3.72	Si
ini.	3	276	-96.11	1150.68	SLU 75	11.97	Si
fin.	3	-620	290.06	1150.68	SLU 75	3.97	Si
ini.	3	289	-104.52	1150.68	SLU 83	11.01	Si
fin.	3	-639	302.59	1150.68	SLU 83	3.8	Si
ini.	3	237	-84.67	1150.68	SLU 81	13.59	Si
fin.	3	-582	282.81	1150.68	SLU 81	4.07	Si
ini.	3	274	-97.12	1150.68	SLU 74	11.85	Si
fin.	3	-629	291.23	1150.68	SLU 74	3.95	Si
ini.	3	291	-103.51	1150.68	SLU 84	11.12	Si
fin.	3	-630	301.42	1150.68	SLU 84	3.82	Si

Verifiche a taglio delle travi in muratura secondo §C8.7.1.3.1 in combinazioni non sismiche

Sezione	γM	N	M	V	Vt	Vp	Vt fess. diag.	Vt,lim	Comb.	c.s.	Verifica
ini.	3	273	-99.81	-34			873	270	SLU 57	7.9	Si
fin.	3	-649	279.23	2346			1107	438	SLU 57	0.19	No
ini.	3	279	-104.12	-43			873	269	SLU 69	6.26	Si
fin.	3	-677	282.8	2423			1117	442	SLU 69	0.18	No
ini.	3	323	-117.86	45			873	258	SLU 80	5.67	Si
fin.	3	-683	309.12	2447			1119	443	SLU 80	0.18	No
ini.	3	321	-118.86	50			873	258	SLU 79	5.15	Si
fin.	3	-692	310.29	2452			1123	444	SLU 79	0.18	No
ini.	3	277	-105.02	-23			873	269	SLU 72	11.56	Si
fin.	3	-674	280.9	2382			1116	441	SLU 72	0.19	No
ini.	3	282	-103.12	-48			873	268	SLU 70	5.63	Si
fin.	3	-668	281.63	2418			1114	440	SLU 70	0.18	No
ini.	3	271	-100.81	-29			873	271	SLU 56	9.19	Si
fin.	3	-658	280.4	2351			1110	439	SLU 56	0.19	No
ini.	3	275	-106.02	-19			873	270	SLU 71	14.53	Si
fin.	3	-683	282.07	2387			1119	443	SLU 71	0.19	No
ini.	3	325	-116.97	26			873	257	SLU 77	9.96	Si
fin.	3	-687	311.02	2488			1121	443	SLU 77	0.18	No
ini.	3	328	-115.96	21			873	257	SLU 78	12.16	Si
fin.	3	-678	309.85	2483			1117	442	SLU 78	0.18	No

Verifiche a pressoflessione delle travi in muratura in combinazioni sismiche

Sezione	γM	N	M	Mu	Comb.	c.s.	Verifica
ini.	2	-2549	880.69	1726.01	SLV 13	1.96	Si
fin.	2	1816	-398.41	1726.01	SLV 13	4.33	Si
ini.	2	2816	-982.97	1726.01	SLV 3	1.76	Si
fin.	2	-2682	774.14	1726.01	SLV 3	2.23	Si

Sezione	γM	N	M	Mu	Comb.	c.s.	Verifica
ini.	2	-717	-295.85	1726.01	SLV 6	5.83	Si
fin.	2	-2932	479.88	1726.01	SLV 6	3.6	Si
ini.	2	-1638	861.52	1726.01	SLV 15	2	Si
fin.	2	2820	-462.33	1726.01	SLV 15	3.73	Si
ini.	2	-2549	880.69	1726.01	SLV 14	1.96	Si
fin.	2	1816	-398.41	1726.01	SLV 14	4.33	Si
ini.	2	-1638	861.52	1726.01	SLV 16	2	Si
fin.	2	2820	-462.33	1726.01	SLV 16	3.73	Si
ini.	2	1905	-963.79	1726.01	SLV 1	1.79	Si
fin.	2	-3687	838.06	1726.01	SLV 1	2.06	Si
ini.	2	1905	-963.79	1726.01	SLV 2	1.79	Si
fin.	2	-3687	838.06	1726.01	SLV 2	2.06	Si
ini.	2	-717	-295.85	1726.01	SLV 5	5.83	Si
fin.	2	-2932	479.88	1726.01	SLV 5	3.6	Si
ini.	2	2816	-982.97	1726.01	SLV 4	1.76	Si
fin.	2	-2682	774.14	1726.01	SLV 4	2.23	Si

Verifiche a taglio delle travi in muratura secondo §C8.7.1.3.1 in combinazioni sismiche

Sezione	γM	N	M	V	Vt	Vp	Vt fess. diag.	Vt,lim	Comb.	c.s.	Verifica
ini.	2	2320	-359.77	617			1310	0	SLV 8	0	No
fin.	2	415	266.8	3801			1310	404	SLV 8	0.11	No
ini.	2	1905	-963.79	3488			1310	0	SLV 2	0	No
fin.	2	-3687	838.06	4632			2637	977	SLV 2	0.21	No
ini.	2	984	193.57	-1457			1310	231	SLV 12	0.16	No
fin.	2	2066	-104.14	1744			1310	0	SLV 12	0	No
ini.	2	2816	-982.97	3280			1310	0	SLV 3	0	No
fin.	2	-2682	774.14	5356			2276	872	SLV 3	0.16	No
ini.	2	2320	-359.77	617			1310	0	SLV 7	0	No
fin.	2	415	266.8	3801			1310	404	SLV 7	0.11	No
ini.	2	984	193.57	-1457			1310	231	SLV 11	0.16	No
fin.	2	2066	-104.14	1744			1310	0	SLV 11	0	No
ini.	2	-2549	880.69	-3425			2228	857	SLV 14	0.25	No
fin.	2	1816	-398.41	-2224			1310	0	SLV 14	0	No
ini.	2	-2549	880.69	-3425			2228	857	SLV 13	0.25	No
fin.	2	1816	-398.41	-2224			1310	0	SLV 13	0	No
ini.	2	1905	-963.79	3488			1310	0	SLV 1	0	No
fin.	2	-3687	838.06	4632			2637	977	SLV 1	0.21	No
ini.	2	2816	-982.97	3280			1310	0	SLV 4	0	No
fin.	2	-2682	774.14	5356			2276	872	SLV 4	0.16	No

Tabella dei coefficienti di sicurezza minimi

Stato limite	Coeff.s.	Comb.	Verifica
PF_SLV	1.756	SLV 3	Si
V_SLV	0	SLV 1	No
PF_SLU	3.7	SLU 77	Si
V_SLU	0.178	SLU 78	No

Trave di accoppiamento 123

Verifiche condotte secondo D.M. 17-01-18 (N.T.C.)

Dati geometrici

X ini.	Y ini.	Z ini.inf.	Z ini.sup.	H ini.	X fin.	Y fin.	Z fin.inf.	Z fin.sup	H fin.	Luce	Spessore	R. Trazione
-17.796	6.536	10.7	11.45	0.75	-16.796	6.536	10.7	11.45	0.75	1	0.28	30000

Caratteristiche del materiale

(Circolare 7 21-01-19 C8.5.I) Muratura in mattoni pieni e malta di calce LC2_Corti

fb_	fhk	fvk0	fhmedio	τ0	fv0	μ	ϕ	fvk,lim	E	G	FC
120000			172500	9000	20000	0.577	0.767	6500	320000000	128000000	1.2

Verifiche a pressoflessione delle travi in muratura in combinazioni non sismiche

Sezione	γM	N	M	Mu	Comb.	c.s.	Verifica
ini.	3	-534	-271.05	799.08	SLU 78	2.95	Si
fin.	3	78	50.87	799.08	SLU 78	15.71	Si
ini.	3	-543	-255.24	799.08	SLU 83	3.13	Si
fin.	3	-55	44.64	799.08	SLU 83	17.9	Si
ini.	3	-475	-246.19	799.08	SLU 72	3.25	Si
fin.	3	159	48.18	799.08	SLU 72	16.58	Si
ini.	3	-540	-272.34	799.08	SLU 77	2.93	Si
fin.	3	81	51.26	799.08	SLU 77	15.59	Si
ini.	3	-537	-253.95	799.08	SLU 84	3.15	Si
fin.	3	-58	44.25	799.08	SLU 84	18.06	Si
ini.	3	-480	-247.48	799.08	SLU 71	3.23	Si
fin.	3	162	48.57	799.08	SLU 71	16.45	Si
ini.	3	-562	-271.9	799.08	SLU 79	2.94	Si
fin.	3	84	53.43	799.08	SLU 79	14.96	Si
ini.	3	-459	-247.92	799.08	SLU 69	3.22	Si
fin.	3	160	46.41	799.08	SLU 69	17.22	Si
ini.	3	-556	-270.61	799.08	SLU 80	2.95	Si
fin.	3	81	53.04	799.08	SLU 80	15.07	Si
ini.	3	-453	-246.63	799.08	SLU 70	3.24	Si
fin.	3	157	46.02	799.08	SLU 70	17.36	Si

Verifiche a taglio delle travi in muratura secondo §C8.7.1.3.1 in combinazioni non sismiche

Sezione	γM	N	M	V	Vt	Vp	Vt fess. diag.	Vt,lim	Comb.	c.s.	Verifica
ini.	3	-537	-253.95	2059			768	303	SLU 84	0.15	No
fin.	3	-58	44.25	-1871			624	238	SLU 84	0.13	No

Sezione	γM	N	M	V	Vt	Vp	Vt fess. diag.	Vt,lim	Comb.	c.s.	Verifica
ini.	3	-540	-272.34	2130			768	304	SLU 77	0.14	No
fin.	3	81	51.26	-1805			607	215	SLU 77	0.12	No
ini.	3	-459	-247.92	1927			744	294	SLU 69	0.15	No
fin.	3	160	46.41	-1555			607	201	SLU 69	0.13	No
ini.	3	-556	-270.61	2108			773	306	SLU 80	0.15	No
fin.	3	81	53.04	-1756			607	215	SLU 80	0.12	No
ini.	3	-562	-271.9	2111			775	306	SLU 79	0.15	No
fin.	3	84	53.43	-1748			607	214	SLU 79	0.12	No
ini.	3	-486	-245.21	1994			752	297	SLU 74	0.15	No
fin.	3	-24	40.4	-1813			614	232	SLU 74	0.13	No
ini.	3	-543	-255.24	2062			769	304	SLU 83	0.15	No
fin.	3	-55	44.64	-1863			623	237	SLU 83	0.13	No
ini.	3	-480	-243.92	1991			751	296	SLU 75	0.15	No
fin.	3	-27	40.01	-1821			615	233	SLU 75	0.13	No
ini.	3	-453	-246.63	1924			742	293	SLU 70	0.15	No
fin.	3	157	46.02	-1563			607	201	SLU 70	0.13	No
ini.	3	-534	-271.05	2127			767	303	SLU 78	0.14	No
fin.	3	78	50.87	-1813			607	215	SLU 78	0.12	No

Verifiche a pressoflessione delle travi in muratura in combinazioni sismiche

Sezione	γM	N	M	Mu	Comb.	c.s.	Verifica
ini.	2	-1915	-403.8	1198.62	SLV 5	2.97	Si
fin.	2	-436	26.91	1198.62	SLV 5	44.54	Si
ini.	2	1676	454.99	1198.62	SLV 16	2.63	Si
fin.	2	-1834	-340.13	1198.62	SLV 16	3.52	Si
ini.	2	-1915	-403.8	1198.62	SLV 6	2.97	Si
fin.	2	-436	26.91	1198.62	SLV 6	44.54	Si
ini.	2	-2263	-753.21	1198.62	SLV 2	1.59	Si
fin.	2	1727	381.15	1198.62	SLV 2	3.14	Si
ini.	2	-2263	-753.21	1198.62	SLV 1	1.59	Si
fin.	2	1727	381.15	1198.62	SLV 1	3.14	Si
ini.	2	-1583	-704.78	1198.62	SLV 3	1.7	Si
fin.	2	2331	448.26	1198.62	SLV 3	2.67	Si
ini.	2	996	406.55	1198.62	SLV 13	2.95	Si
fin.	2	-2438	-407.24	1198.62	SLV 13	2.94	Si
ini.	2	996	406.55	1198.62	SLV 14	2.95	Si
fin.	2	-2438	-407.24	1198.62	SLV 14	2.94	Si
ini.	2	1676	454.99	1198.62	SLV 15	2.63	Si
fin.	2	-1834	-340.13	1198.62	SLV 15	3.52	Si
ini.	2	-1583	-704.78	1198.62	SLV 4	1.7	Si
fin.	2	2331	448.26	1198.62	SLV 4	2.67	Si

Verifiche a taglio delle travi in muratura secondo §C8.7.1.3.1 in combinazioni sismiche

Sezione	γM	N	M	V	Vt	Vp	Vt fess. diag.	Vt,lim	Comb.	c.s.	Verifica
ini.	2	1676	454.99	-1386			910	0	SLV 15	0	No
fin.	2	-1834	-340.13	-3510			1460	567	SLV 15	0.16	No
ini.	2	-1583	-704.78	3581			1385	542	SLV 3	0.15	No
fin.	2	2331	448.26	1580			910	0	SLV 3	0	No
ini.	2	1676	454.99	-1386			910	0	SLV 16	0	No
fin.	2	-1834	-340.13	-3510			1460	567	SLV 16	0.16	No
ini.	2	350	-242.36	1445			910	279	SLV 8	0.19	No
fin.	2	1578	250.62	315			910	0	SLV 8	0	No
ini.	2	1328	105.57	-45			910	0	SLV 12	0	No
fin.	2	329	14.11	-1213			910	284	SLV 12	0.23	No
ini.	2	-2263	-753.21	3923			1589	608	SLV 1	0.16	No
fin.	2	1727	381.15	1138			910	0	SLV 1	0	No
ini.	2	-2263	-753.21	3923			1589	608	SLV 2	0.16	No
fin.	2	1727	381.15	1138			910	0	SLV 2	0	No
ini.	2	-1583	-704.78	3581			1385	542	SLV 4	0.15	No
fin.	2	2331	448.26	1580			910	0	SLV 4	0	No
ini.	2	1328	105.57	-45			910	0	SLV 11	0	No
fin.	2	329	14.11	-1213			910	284	SLV 11	0.23	No
ini.	2	350	-242.36	1445			910	279	SLV 7	0.19	No
fin.	2	1578	250.62	315			910	0	SLV 7	0	No

Tabella dei coefficienti di sicurezza minimi

Stato limite	Coeff.s.	Comb.	Verifica
PF_SLV	1.591	SLV 1	Si
V_SLV	0	SLV 1	No
PF_SLU	2.934	SLU 77	Si
V_SLU	0.119	SLU 78	No

Trave di accoppiamento 124

Verifiche condotte secondo D.M. 17-01-18 (N.T.C.)

Dati geometrici

X ini.	Y ini.	Z ini.inf.	Z ini.sup.	H ini.	X fin.	Y fin.	Z fin.inf.	Z fin.sup	H fin.	Luce	Spessore	R. Trazione
-12.901	6.536	7.9	8.8	0.9	-11.901	6.536	7.9	8.8	0.9	1	0.28	30000

Caratteristiche del materiale

(Circolare 7 21-01-19 C8.5.I) Muratura in mattoni pieni e malta di calce LC2_Corti

fb_	fhk	fvk0	fhmedio	τ0	fv0	μ	ϕ	fvk,lim	E	G	FC
120000			172500	9000	20000	0.577	0.767	6500	320000000	128000000	1.2

Verifiche a pressoflessione delle travi in muratura in combinazioni non sismiche

Sezione	γM	N	M	Mu	Comb.	c.s.	Verifica
ini.	3	-583	110.25	1150.68	SLU 82	10.44	Si
fin.	3	-661	138.37	1150.68	SLU 82	8.32	Si
ini.	3	-577	118.4	1150.68	SLU 84	9.72	Si
fin.	3	-640	137.15	1150.68	SLU 84	8.39	Si
ini.	3	-585	109.39	1150.68	SLU 81	10.52	Si
fin.	3	-667	139.51	1150.68	SLU 81	8.25	Si
ini.	3	-558	123.43	1150.68	SLU 79	9.32	Si
fin.	3	-604	133.21	1150.68	SLU 79	8.64	Si
ini.	3	-574	117.87	1150.68	SLU 75	9.76	Si
fin.	3	-635	137.45	1150.68	SLU 75	8.37	Si
ini.	3	-575	117.01	1150.68	SLU 74	9.83	Si
fin.	3	-641	138.58	1150.68	SLU 74	8.3	Si
ini.	3	-569	125.16	1150.68	SLU 77	9.19	Si
fin.	3	-619	137.35	1150.68	SLU 77	8.38	Si
ini.	3	-579	117.54	1150.68	SLU 83	9.79	Si
fin.	3	-645	138.28	1150.68	SLU 83	8.32	Si
ini.	3	-568	126.02	1150.68	SLU 78	9.13	Si
fin.	3	-614	136.22	1150.68	SLU 78	8.45	Si
ini.	3	-567	108.56	1150.68	SLU 73	10.6	Si
fin.	3	-637	133.77	1150.68	SLU 73	8.6	Si

Verifiche a taglio delle travi in muratura secondo §C8.7.1.3.1 in combinazioni non sismiche

Sezione	γM	N	M	V	Vt	Vp	Vt fess. diag.	Vt,lim	Comb.	c.s.	Verifica
ini.	3	-569	125.16	-912			1078	426	SLU 77	0.47	No
fin.	3	-619	137.35	1002			1096	433	SLU 77	0.43	No
ini.	3	-568	126.02	-916			1078	425	SLU 78	0.46	No
fin.	3	-614	136.22	998			1094	432	SLU 78	0.43	No
ini.	3	-558	123.43	-895			1074	424	SLU 79	0.47	No
fin.	3	-604	133.21	975			1091	431	SLU 79	0.44	No
ini.	3	-579	117.54	-846			1082	427	SLU 83	0.5	No
fin.	3	-645	138.28	967			1106	437	SLU 83	0.45	No
ini.	3	-557	124.29	-899			1074	424	SLU 80	0.47	No
fin.	3	-599	132.08	972			1089	430	SLU 80	0.44	No
ini.	3	-533	120.73	-876			1065	420	SLU 70	0.48	No
fin.	3	-567	127.25	943			1078	425	SLU 70	0.45	No
ini.	3	-577	118.4	-850			1081	427	SLU 84	0.5	No
fin.	3	-640	137.15	964			1104	436	SLU 84	0.45	No
ini.	3	-575	117.01	-847			1080	427	SLU 74	0.5	No
fin.	3	-641	138.58	970			1104	436	SLU 74	0.45	No
ini.	3	-574	117.87	-850			1080	426	SLU 75	0.5	No
fin.	3	-635	137.45	966			1102	436	SLU 75	0.45	No
ini.	3	-535	119.87	-872			1066	420	SLU 69	0.48	No
fin.	3	-573	128.38	946			1080	426	SLU 69	0.45	No

Verifiche a pressoflessione delle travi in muratura in combinazioni sismiche

Sezione	γM	N	M	Mu	Comb.	c.s.	Verifica
ini.	2	-1991	382.23	1726.01	SLV 10	4.52	Si
fin.	2	-1010	-151.44	1726.01	SLV 10	11.4	Si
ini.	2	-2379	930.29	1726.01	SLV 13	1.86	Si
fin.	2	917	-697.05	1726.01	SLV 13	2.48	Si
ini.	2	900	-742.3	1726.01	SLV 2	2.33	Si
fin.	2	-2480	886.05	1726.01	SLV 2	1.95	Si
ini.	2	-1728	898.27	1726.01	SLV 15	1.92	Si
fin.	2	1549	-689.78	1726.01	SLV 15	2.5	Si
ini.	2	1551	-774.31	1726.01	SLV 4	2.23	Si
fin.	2	-1848	893.31	1726.01	SLV 4	1.93	Si
ini.	2	-1728	898.27	1726.01	SLV 16	1.92	Si
fin.	2	1549	-689.78	1726.01	SLV 16	2.5	Si
ini.	2	1551	-774.31	1726.01	SLV 3	2.23	Si
fin.	2	-1848	893.31	1726.01	SLV 3	1.93	Si
ini.	2	900	-742.3	1726.01	SLV 1	2.33	Si
fin.	2	-2480	886.05	1726.01	SLV 1	1.95	Si
ini.	2	-2379	930.29	1726.01	SLV 14	1.86	Si
fin.	2	917	-697.05	1726.01	SLV 14	2.48	Si
ini.	2	-1991	382.23	1726.01	SLV 9	4.52	Si
fin.	2	-1010	-151.44	1726.01	SLV 9	11.4	Si

Verifiche a taglio delle travi in muratura secondo §C8.7.1.3.1 in combinazioni sismiche

Sezione	γM	N	M	V	Vt	Vp	Vt fess. diag.	Vt,lim	Comb.	c.s.	Verifica
ini.	2	-1728	898.27	-3767			1932	759	SLV 15	0.2	No
fin.	2	1549	-689.78	-2325			1310	0	SLV 15	0	No
ini.	2	900	-742.3	2661			1310	263	SLV 1	0.1	No
fin.	2	-2480	886.05	3643			2203	849	SLV 1	0.23	No
ini.	2	1163	-226.26	-20			1310	137	SLV 8	6.75	Si
fin.	2	78	347.71	2087			1310	477	SLV 8	0.23	No
ini.	2	-2379	930.29	-3530			2167	838	SLV 13	0.24	No
fin.	2	917	-697.05	-2618			1310	257	SLV 13	0.1	No
ini.	2	1163	-226.26	-20			1310	137	SLV 7	6.75	Si
fin.	2	78	347.71	2087			1310	477	SLV 7	0.23	No
ini.	2	-2379	930.29	-3530			2167	838	SLV 14	0.24	No
fin.	2	917	-697.05	-2618			1310	257	SLV 14	0.1	No
ini.	2	900	-742.3	2661			1310	263	SLV 2	0.1	No
fin.	2	-2480	886.05	3643			2203	849	SLV 2	0.23	No
ini.	2	1551	-774.31	2423			1310	0	SLV 4	0	No
fin.	2	-1848	893.31	3936			1976	774	SLV 4	0.2	No
ini.	2	-1728	898.27	-3767			1932	759	SLV 16	0.2	No
fin.	2	1549	-689.78	-2325			1310	0	SLV 16	0	No
ini.	2	1551	-774.31	2423			1310	0	SLV 3	0	No
fin.	2	-1848	893.31	3936			1976	774	SLV 3	0.2	No

Tabella dei coefficienti di sicurezza minimi

Stato limite	Coeff.s.	Comb.	Verifica
PF_SLV	1.855	SLV 13	Si
V_SLV	0	SLV 3	No
PF_SLU	8.248	SLU 81	Si
V_SLU	0.433	SLU 77	No

Trave di accoppiamento 125

Verifiche condotte secondo D.M. 17-01-18 (N.T.C.)

Dati geometrici

X ini.	Y ini.	Z ini.inf.	Z ini.sup.	H ini.	X fin.	Y fin.	Z fin.inf.	Z fin.sup	H fin.	Luce	Spessore	R. Trazione
-12.901	6.536	10.7	11.45	0.75	-11.901	6.536	10.7	11.45	0.75	1	0.28	30000

Caratteristiche del materiale

(Circolare 7 21-01-19 C8.5.I) Muratura in mattoni pieni e malta di calce LC2_Corti

fb_	fhk	fvk0	fhmedio	τ0	fv0	μ	ϕ	fvk,lim	E	G	FC
120000			172500	9000	20000	0.577	0.767	6500	320000000	128000000	1.2

Verifiche a pressoflessione delle travi in muratura in combinazioni non sismiche

Sezione	γM	N	M	Mu	Comb.	c.s.	Verifica
ini.	3	-550	-128.29	799.08	SLU 78	6.23	Si
fin.	3	-493	-165.68	799.08	SLU 78	4.82	Si
ini.	3	-556	-128.82	799.08	SLU 75	6.2	Si
fin.	3	-484	-154.58	799.08	SLU 75	5.17	Si
ini.	3	-477	-113.04	799.08	SLU 70	7.07	Si
fin.	3	-431	-149.94	799.08	SLU 70	5.33	Si
ini.	3	-571	-131.99	799.08	SLU 84	6.05	Si
fin.	3	-499	-159.02	799.08	SLU 84	5.03	Si
ini.	3	-555	-129.15	799.08	SLU 77	6.19	Si
fin.	3	-496	-165.24	799.08	SLU 77	4.84	Si
ini.	3	-534	-124.92	799.08	SLU 80	6.4	Si
fin.	3	-482	-163.37	799.08	SLU 80	4.89	Si
ini.	3	-561	-129.68	799.08	SLU 74	6.16	Si
fin.	3	-486	-154.14	799.08	SLU 74	5.18	Si
ini.	3	-536	-124.88	799.08	SLU 76	6.4	Si
fin.	3	-471	-152.57	799.08	SLU 76	5.24	Si
ini.	3	-539	-125.78	799.08	SLU 79	6.35	Si
fin.	3	-485	-162.94	799.08	SLU 79	4.9	Si
ini.	3	-576	-132.85	799.08	SLU 83	6.01	Si
fin.	3	-502	-158.59	799.08	SLU 83	5.04	Si

Verifiche a taglio delle travi in muratura secondo §C8.7.1.3.1 in combinazioni non sismiche

Sezione	γM	N	M	V	Vt	Vp	Vt fess. diag.	Vt,lim	Comb.	c.s.	Verifica
ini.	3	-550	-128.29	1345			771	305	SLU 78	0.23	No
fin.	3	-493	-165.68	-1484			755	298	SLU 78	0.2	No
ini.	3	-571	-131.99	1329			778	308	SLU 84	0.23	No
fin.	3	-499	-159.02	-1435			756	299	SLU 84	0.21	No
ini.	3	-576	-132.85	1333			779	308	SLU 83	0.23	No
fin.	3	-502	-158.59	-1434			757	299	SLU 83	0.21	No
ini.	3	-555	-129.15	1349			773	306	SLU 77	0.23	No
fin.	3	-496	-165.24	-1483			755	298	SLU 77	0.2	No
ini.	3	-539	-125.78	1327			768	304	SLU 79	0.23	No
fin.	3	-485	-162.94	-1467			752	297	SLU 79	0.2	No
ini.	3	-477	-113.04	1227			750	296	SLU 70	0.24	No
fin.	3	-431	-149.94	-1371			736	290	SLU 70	0.21	No
ini.	3	-483	-113.9	1231			751	297	SLU 69	0.24	No
fin.	3	-433	-149.51	-1370			737	290	SLU 69	0.21	No
ini.	3	-556	-128.82	1300			773	306	SLU 75	0.24	No
fin.	3	-484	-154.58	-1403			752	297	SLU 75	0.21	No
ini.	3	-561	-129.68	1304			775	306	SLU 74	0.23	No
fin.	3	-486	-154.14	-1402			752	297	SLU 74	0.21	No
ini.	3	-534	-124.92	1324			767	303	SLU 80	0.23	No
fin.	3	-482	-163.37	-1468			751	297	SLU 80	0.2	No

Verifiche a pressoflessione delle travi in muratura in combinazioni sismiche

Sezione	γM	N	M	Mu	Comb.	c.s.	Verifica
ini.	2	-1181	-598.25	1198.62	SLV 3	2	Si
fin.	2	1127	406.05	1198.62	SLV 3	2.95	Si
ini.	2	428	423.69	1198.62	SLV 14	2.83	Si
fin.	2	-1761	-599.51	1198.62	SLV 14	2	Si
ini.	2	-941	35.44	1198.62	SLV 9	33.82	Si
fin.	2	-1567	-330.77	1198.62	SLV 9	3.62	Si
ini.	2	960	443.84	1198.62	SLV 15	2.7	Si
fin.	2	-1222	-544.65	1198.62	SLV 15	2.2	Si
ini.	2	-1713	-618.4	1198.62	SLV 1	1.94	Si
fin.	2	589	351.2	1198.62	SLV 1	3.41	Si
ini.	2	960	443.84	1198.62	SLV 16	2.7	Si
fin.	2	-1222	-544.65	1198.62	SLV 16	2.2	Si
ini.	2	428	423.69	1198.62	SLV 13	2.83	Si
fin.	2	-1761	-599.51	1198.62	SLV 13	2	Si
ini.	2	-941	35.44	1198.62	SLV 10	33.82	Si
fin.	2	-1567	-330.77	1198.62	SLV 10	3.62	Si
ini.	2	-1181	-598.25	1198.62	SLV 4	2	Si
fin.	2	1127	406.05	1198.62	SLV 4	2.95	Si
ini.	2	-1713	-618.4	1198.62	SLV 2	1.94	Si

Sezione	γM	N	M	Mu	Comb.	c.s.	Verifica
fin.	2	589	351.2	1198.62	SLV 2	3.41	Si

Verifiche a taglio delle travi in muratura secondo §C8.7.1.3.1 in combinazioni sismiche

Sezione	γM	N	M	V	Vt	Vp	Vt fess. diag.	Vt,lim	Comb.	c.s.	Verifica
ini.	2	189	-210	1785			910	310	SLV 8	0.17	No
fin.	2	933	137.31	-727			910	114	SLV 8	0.16	No
ini.	2	831	102.63	637			910	156	SLV 11	0.25	No
fin.	2	228	-147.9	-1873			910	303	SLV 11	0.16	No
ini.	2	-1181	-598.25	2885			1264	499	SLV 3	0.17	No
fin.	2	1127	406.05	876			910	0	SLV 3	0	No
ini.	2	-1713	-618.4	2679			1424	555	SLV 1	0.21	No
fin.	2	589	351.2	1103			910	227	SLV 1	0.21	No
ini.	2	-1713	-618.4	2679			1424	555	SLV 2	0.21	No
fin.	2	589	351.2	1103			910	227	SLV 2	0.21	No
ini.	2	960	443.84	-942			910	100	SLV 15	0.11	No
fin.	2	-1222	-544.65	-2946			1276	504	SLV 15	0.17	No
ini.	2	189	-210	1785			910	310	SLV 7	0.17	No
fin.	2	933	137.31	-727			910	114	SLV 7	0.16	No
ini.	2	-1181	-598.25	2885			1264	499	SLV 4	0.17	No
fin.	2	1127	406.05	876			910	0	SLV 4	0	No
ini.	2	960	443.84	-942			910	100	SLV 16	0.11	No
fin.	2	-1222	-544.65	-2946			1276	504	SLV 16	0.17	No
ini.	2	831	102.63	637			910	156	SLV 12	0.25	No
fin.	2	228	-147.9	-1873			910	303	SLV 12	0.16	No

Tabella dei coefficienti di sicurezza minimi

Stato limite	Coeff.s.	Comb.	Verifica
PF_SLV	1.938	SLV 1	Si
V_SLV	0	SLV 3	No
PF_SLU	4.823	SLU 78	Si
V_SLU	0.201	SLU 78	No

Trave di accoppiamento 126

Verifiche condotte secondo D.M. 17-01-18 (N.T.C.)

Dati geometrici

X ini.	Y ini.	Z ini.inf.	Z ini.sup.	H ini.	X fin.	Y fin.	Z fin.inf.	Z fin.sup	H fin.	Luce	Spessore	R. Trazione
-8.007	6.536	7.9	8.8	0.9	-7.007	6.536	7.9	8.8	0.9	1	0.28	30000

Caratteristiche del materiale

(Circolare 7 21-01-19 C8.5.I) Muratura in mattoni pieni e malta di calce LC2_Corti

fb_	fhk	fvk0	fhmedio	τ0	fv0	μ	ϕ	fvk,lim	E	G	FC
120000			172500	9000	20000	0.577	0.767	6500	320000000	128000000	1.2

Verifiche a pressoflessione delle travi in muratura in combinazioni non sismiche

Sezione	γM	N	M	Mu	Comb.	c.s.	Verifica
ini.	3	-671	298.22	1150.68	SLU 80	3.86	Si
fin.	3	76	-70.3	1150.68	SLU 80	16.37	Si
ini.	3	-601	289.42	1150.68	SLU 81	3.98	Si
fin.	3	119	-76.7	1150.68	SLU 81	15	Si
ini.	3	-679	298.93	1150.68	SLU 79	3.85	Si
fin.	3	71	-70.53	1150.68	SLU 79	16.31	Si
ini.	3	-593	288.71	1150.68	SLU 82	3.99	Si
fin.	3	124	-76.46	1150.68	SLU 82	15.05	Si
ini.	3	-635	299.48	1150.68	SLU 84	3.84	Si
fin.	3	110	-76.28	1150.68	SLU 84	15.09	Si
ini.	3	-626	290.26	1150.68	SLU 75	3.96	Si
fin.	3	105	-72.25	1150.68	SLU 75	15.93	Si
ini.	3	-675	301.74	1150.68	SLU 77	3.81	Si
fin.	3	86	-72.29	1150.68	SLU 77	15.92	Si
ini.	3	-643	300.19	1150.68	SLU 83	3.83	Si
fin.	3	105	-76.51	1150.68	SLU 83	15.04	Si
ini.	3	-633	290.97	1150.68	SLU 74	3.95	Si
fin.	3	100	-72.48	1150.68	SLU 74	15.88	Si
ini.	3	-668	301.03	1150.68	SLU 78	3.82	Si
fin.	3	91	-72.06	1150.68	SLU 78	15.97	Si

Verifiche a taglio delle travi in muratura secondo §C8.7.1.3.1 in combinazioni non sismiche

Sezione	γM	N	M	V	Vt	Vp	Vt fess. diag.	Vt,lim	Comb.	c.s.	Verifica
ini.	3	-668	301.03	-2063			1114	440	SLU 78	0.21	No
fin.	3	91	-72.06	120			873	310	SLU 78	2.58	Si
ini.	3	-653	272.97	-2007			1108	438	SLU 70	0.22	No
fin.	3	46	-58.55	195			873	320	SLU 70	1.64	Si
ini.	3	-679	298.93	-2021			1118	442	SLU 79	0.22	No
fin.	3	71	-70.53	105			873	314	SLU 79	2.99	Si
ini.	3	-671	298.22	-2019			1115	441	SLU 80	0.22	No
fin.	3	76	-70.3	107			873	313	SLU 80	2.93	Si
ini.	3	-637	272.55	-1954			1103	436	SLU 57	0.22	No
fin.	3	57	-60.77	160			873	317	SLU 57	1.98	Si
ini.	3	-633	290.97	-1968			1101	435	SLU 74	0.22	No
fin.	3	100	-72.48	90			873	308	SLU 74	3.42	Si
ini.	3	-661	273.68	-2010			1111	439	SLU 69	0.22	No
fin.	3	41	-58.79	193			873	321	SLU 69	1.66	Si
ini.	3	-675	301.74	-2066			1117	441	SLU 77	0.21	No
fin.	3	86	-72.29	118			873	311	SLU 77	2.63	Si
ini.	3	-626	290.26	-1966			1099	434	SLU 75	0.22	No

Sezione	γM	N	M	V	Vt	Vp	Vt fess. diag.	Vt,lim	Comb.	c.s.	Verifica
fin.	3	105	-72.25	92			873	307	SLU 75	3.34	Si
ini.	3	-645	273.26	-1956			1106	437	SLU 56	0.22	No
fin.	3	53	-61	158			873	318	SLU 56	2.01	Si

Verifiche a pressoflessione delle travi in muratura in combinazioni sismiche

Sezione	γM	N	M	Mu	Comb.	c.s.	Verifica
ini.	2	-2973	569.99	1726.01	SLV 9	3.03	Si
fin.	2	133	-200.25	1726.01	SLV 9	8.62	Si
ini.	2	1751	-322.35	1726.01	SLV 2	5.35	Si
fin.	2	-2250	869.74	1726.01	SLV 2	1.98	Si
ini.	2	-2638	709.46	1726.01	SLV 15	2.43	Si
fin.	2	2346	-960.81	1726.01	SLV 15	1.8	Si
ini.	2	-2973	569.99	1726.01	SLV 10	3.03	Si
fin.	2	133	-200.25	1726.01	SLV 10	8.62	Si
ini.	2	-3668	831.48	1726.01	SLV 13	2.08	Si
fin.	2	2013	-894.83	1726.01	SLV 13	1.93	Si
ini.	2	-2638	709.46	1726.01	SLV 16	2.43	Si
fin.	2	2346	-960.81	1726.01	SLV 16	1.8	Si
ini.	2	-3668	831.48	1726.01	SLV 14	2.08	Si
fin.	2	2013	-894.83	1726.01	SLV 14	1.93	Si
ini.	2	2781	-444.36	1726.01	SLV 4	3.88	Si
fin.	2	-1917	803.76	1726.01	SLV 4	2.15	Si
ini.	2	2781	-444.36	1726.01	SLV 3	3.88	Si
fin.	2	-1917	803.76	1726.01	SLV 3	2.15	Si
ini.	2	1751	-322.35	1726.01	SLV 1	5.35	Si
fin.	2	-2250	869.74	1726.01	SLV 1	1.98	Si

Verifiche a taglio delle travi in muratura secondo §C8.7.1.3.1 in combinazioni sismiche

Sezione	γM	N	M	V	Vt	Vp	Vt fess. diag.	Vt,lim	Comb.	c.s.	Verifica
ini.	2	2781	-444.36	1555			1310	0	SLV 3	0	No
fin.	2	-1917	803.76	3596			2000	783	SLV 3	0.22	No
ini.	2	-3668	831.48	-4262			2631	975	SLV 13	0.23	No
fin.	2	2013	-894.83	-3431			1310	0	SLV 13	0	No
ini.	2	2085	-182.87	-1653			1310	0	SLV 8	0	No
fin.	2	-37	109.18	1489			1323	500	SLV 8	0.34	No
ini.	2	-2638	709.46	-5035			2260	867	SLV 15	0.17	No
fin.	2	2346	-960.81	-3198			1310	0	SLV 15	0	No
ini.	2	-3668	831.48	-4262			2631	975	SLV 14	0.23	No
fin.	2	2013	-894.83	-3431			1310	0	SLV 14	0	No
ini.	2	2781	-444.36	1555			1310	0	SLV 4	0	No
fin.	2	-1917	803.76	3596			2000	783	SLV 4	0.22	No
ini.	2	-2638	709.46	-5035			2260	867	SLV 16	0.17	No
fin.	2	2346	-960.81	-3198			1310	0	SLV 16	0	No
ini.	2	1751	-322.35	2328			1310	0	SLV 2	0	No
fin.	2	-2250	869.74	3363			2120	823	SLV 2	0.24	No
ini.	2	1751	-322.35	2328			1310	0	SLV 1	0	No
fin.	2	-2250	869.74	3363			2120	823	SLV 1	0.24	No
ini.	2	2085	-182.87	-1653			1310	0	SLV 7	0	No
fin.	2	-37	109.18	1489			1323	500	SLV 7	0.34	No

Tabella dei coefficienti di sicurezza minimi

Stato limite	Coeff.s.	Comb.	Verifica
PF_SLV	1.796	SLV 15	Si
V_SLV	0	SLV 1	No
PF_SLU	3.814	SLU 77	Si
V_SLU	0.213	SLU 78	No

Trave di accoppiamento 127

Verifiche condotte secondo D.M. 17-01-18 (N.T.C.)

Dati geometrici

X ini.	Y ini.	Z ini.inf.	Z ini.sup.	H ini.	X fin.	Y fin.	Z fin.inf.	Z fin.sup	H fin.	Luce	Spessore	R. Trazione
-8.007	6.536	10.7	11.45	0.75	-7.007	6.536	10.7	11.45	0.75	1	0.28	30000

Caratteristiche del materiale

(Circolare 7 21-01-19 C8.5.I) Muratura in mattoni pieni e malta di calce LC2_Corti

fb_	fhk	fvk0	fhmedio	τ0	fv0	μ	ϕ	fvk,lim	E	G	FC
120000			172500	9000	20000	0.577	0.767	6500	320000000	128000000	1.2

Verifiche a pressoflessione delle travi in muratura in combinazioni non sismiche

Sezione	γM	N	M	Mu	Comb.	c.s.	Verifica
ini.	3	-179	-6.73	799.08	SLU 74	118.75	Si
fin.	3	-452	-188.05	799.08	SLU 74	4.25	Si
ini.	3	-172	-9.47	799.08	SLU 79	84.4	Si
fin.	3	-475	-194.8	799.08	SLU 79	4.1	Si
ini.	3	-238	-2.16	799.08	SLU 82	370.74	Si
fin.	3	-489	-185.34	799.08	SLU 82	4.31	Si
ini.	3	-170	-9.38	799.08	SLU 80	85.18	Si
fin.	3	-470	-194.14	799.08	SLU 80	4.12	Si
ini.	3	-220	-5.38	799.08	SLU 84	148.59	Si
fin.	3	-499	-194.37	799.08	SLU 84	4.11	Si
ini.	3	-161	-9.95	799.08	SLU 77	80.3	Si
fin.	3	-462	-197.08	799.08	SLU 77	4.05	Si
ini.	3	-176	-6.64	799.08	SLU 75	120.31	Si
fin.	3	-447	-187.39	799.08	SLU 75	4.26	Si
ini.	3	-159	-9.86	799.08	SLU 78	81.01	Si

Sezione	γM	N	M	Mu	Comb.	c.s.	Verifica
fin.	3	-457	-196.42	799.08	SLU 78	4.07	Si
ini.	3	-222	-5.47	799.08	SLU 83	146.21	Si
fin.	3	-504	-195.03	799.08	SLU 83	4.1	Si
ini.	3	-240	-2.24	799.08	SLU 81	356.27	Si
fin.	3	-493	-185.99	799.08	SLU 81	4.3	Si

Verifiche a taglio delle travi in muratura secondo §C8.7.1.3.1 in combinazioni non sismiche

Sezione	γM	N	M	V	Vt	Vp	Vt fess. diag.	Vt,lim	Comb.	c.s.	Verifica
ini.	3	-172	-9.47	1713			658	255	SLU 79	0.15	No
fin.	3	-475	-194.8	-1798			749	296	SLU 79	0.16	No
ini.	3	-161	-9.95	1759			655	253	SLU 77	0.14	No
fin.	3	-462	-197.08	-1832			745	294	SLU 77	0.16	No
ini.	3	-220	-5.38	1784			673	262	SLU 84	0.15	No
fin.	3	-499	-194.37	-1838			756	299	SLU 84	0.16	No
ini.	3	-240	-2.24	1753			679	265	SLU 81	0.15	No
fin.	3	-493	-185.99	-1791			755	298	SLU 81	0.17	No
ini.	3	-179	-6.73	1730			660	256	SLU 74	0.15	No
fin.	3	-452	-188.05	-1784			742	293	SLU 74	0.16	No
ini.	3	-170	-9.38	1715			658	254	SLU 80	0.15	No
fin.	3	-470	-194.14	-1797			748	295	SLU 80	0.16	No
ini.	3	-238	-2.16	1755			678	264	SLU 82	0.15	No
fin.	3	-489	-185.34	-1790			753	297	SLU 82	0.17	No
ini.	3	-159	-9.86	1762			654	253	SLU 78	0.14	No
fin.	3	-457	-196.42	-1831			744	293	SLU 78	0.16	No
ini.	3	-176	-6.64	1733			659	255	SLU 75	0.15	No
fin.	3	-447	-187.39	-1783			741	292	SLU 75	0.16	No
ini.	3	-222	-5.47	1782			673	262	SLU 83	0.15	No
fin.	3	-504	-195.03	-1840			758	299	SLU 83	0.16	No

Verifiche a pressoflessione delle travi in muratura in combinazioni sismiche

Sezione	γM	N	M	Mu	Comb.	c.s.	Verifica
ini.	2	2218	381.49	1198.62	SLV 15	3.14	Si
fin.	2	-1344	-648.69	1198.62	SLV 15	1.85	Si
ini.	2	-2443	-388.01	1198.62	SLV 1	3.09	Si
fin.	2	766	407.28	1198.62	SLV 1	2.94	Si
ini.	2	-408	-16.06	1198.62	SLV 9	74.65	Si
fin.	2	-1940	-450.1	1198.62	SLV 9	2.66	Si
ini.	2	1671	310.91	1198.62	SLV 14	3.86	Si
fin.	2	-2078	-742.82	1198.62	SLV 14	1.61	Si
ini.	2	-408	-16.06	1198.62	SLV 10	74.65	Si
fin.	2	-1940	-450.1	1198.62	SLV 10	2.66	Si
ini.	2	1671	310.91	1198.62	SLV 13	3.86	Si
fin.	2	-2078	-742.82	1198.62	SLV 13	1.61	Si
ini.	2	2218	381.49	1198.62	SLV 16	3.14	Si
fin.	2	-1344	-648.69	1198.62	SLV 16	1.85	Si
ini.	2	-1895	-317.42	1198.62	SLV 3	3.78	Si
fin.	2	1501	501.4	1198.62	SLV 3	2.39	Si
ini.	2	-1895	-317.42	1198.62	SLV 4	3.78	Si
fin.	2	1501	501.4	1198.62	SLV 4	2.39	Si
ini.	2	-2443	-388.01	1198.62	SLV 2	3.09	Si
fin.	2	766	407.28	1198.62	SLV 2	2.94	Si

Verifiche a taglio delle travi in muratura secondo §C8.7.1.3.1 in combinazioni sismiche

Sezione	γM	N	M	V	Vt	Vp	Vt fess. diag.	Vt,lim	Comb.	c.s.	Verifica
ini.	2	2218	381.49	-1159			910	0	SLV 16	0	No
fin.	2	-1344	-648.69	-3892			1313	517	SLV 16	0.13	No
ini.	2	-1895	-317.42	3726			1478	573	SLV 3	0.15	No
fin.	2	1501	501.4	1117			910	0	SLV 3	0	No
ini.	2	1671	310.91	-1496			910	0	SLV 13	0	No
fin.	2	-2078	-742.82	-3442			1533	591	SLV 13	0.17	No
ini.	2	1671	310.91	-1496			910	0	SLV 14	0	No
fin.	2	-2078	-742.82	-3442			1533	591	SLV 14	0.17	No
ini.	2	1418	219.22	944			910	0	SLV 12	0	No
fin.	2	509	-136.35	-2664			910	246	SLV 12	0.09	No
ini.	2	1418	219.22	944			910	0	SLV 11	0	No
fin.	2	509	-136.35	-2664			910	246	SLV 11	0.09	No
ini.	2	184	9.54	2409			910	311	SLV 7	0.13	No
fin.	2	1363	208.68	-1161			910	0	SLV 7	0	No
ini.	2	2218	381.49	-1159			910	0	SLV 15	0	No
fin.	2	-1344	-648.69	-3892			1313	517	SLV 15	0.13	No
ini.	2	184	9.54	2409			910	311	SLV 8	0.13	No
fin.	2	1363	208.68	-1161			910	0	SLV 8	0	No
ini.	2	-1895	-317.42	3726			1478	573	SLV 4	0.15	No
fin.	2	1501	501.4	1117			910	0	SLV 4	0	No

Tabella dei coefficienti di sicurezza minimi

Stato limite	Coeff.s.	Comb.	Verifica
PF_SLV	1.614	SLV 13	Si
V_SLV	0	SLV 3	No
PF_SLU	4.055	SLU 77	Si
V_SLU	0.143	SLU 78	No

Trave di accoppiamento 128

Verifiche condotte secondo D.M. 17-01-18 (N.T.C.)

Dati geometrici

X ini.	Y ini.	Z ini.inf.	Z ini.sup.	H ini.	X fin.	Y fin.	Z fin.inf.	Z fin.sup	H fin.	Luce	Spessore	R. Trazione
-8.05	-4.784	11.01	11.45	0.44	-9.89	-4.784	11.01	11.45	0.44	1.84	0.3	30000

Caratteristiche del materiale

(Circolare 7 21-01-19 C8.5.I) Muratura in mattoni pieni e malta di calce LC2_Corti

fb_	fhk	fvk0	fhmedio	τ0	fv0	μ	ϕ	fvk,lim	E	G	FC
120000			172500	9000	20000	0.577	0.767	6500	320000000	128000000	1.2

Verifiche a pressoflessione delle travi in muratura in combinazioni non sismiche

Sezione	γM	N	M	Mu	Comb.	c.s.	Verifica
ini.	3	-389	40.67	294.67	SLU 82	7.25	Si
fin.	3	817	-258.97	294.67	SLU 82	1.14	Si
ini.	3	-325	25.3	294.67	SLU 81	11.65	Si
fin.	3	790	-249.95	294.67	SLU 81	1.18	Si
ini.	3	-422	53.69	294.67	SLU 73	5.49	Si
fin.	3	793	-248.94	294.67	SLU 73	1.18	Si
ini.	3	-402	50.31	294.67	SLU 80	5.86	Si
fin.	3	805	-249.22	294.67	SLU 80	1.18	Si
ini.	3	-386	45.61	294.67	SLU 75	6.46	Si
fin.	3	782	-244.28	294.67	SLU 75	1.21	Si
ini.	3	-401	44.1	294.67	SLU 84	6.68	Si
fin.	3	833	-262.11	294.67	SLU 84	1.12	Si
ini.	3	-398	49.04	294.67	SLU 78	6.01	Si
fin.	3	798	-247.43	294.67	SLU 78	1.19	Si
ini.	3	-433	57.13	294.67	SLU 76	5.16	Si
fin.	3	808	-252.08	294.67	SLU 76	1.17	Si
ini.	3	-336	28.73	294.67	SLU 83	10.26	Si
fin.	3	805	-253.1	294.67	SLU 83	1.16	Si
ini.	3	-338	34.94	294.67	SLU 79	8.43	Si
fin.	3	778	-240.2	294.67	SLU 79	1.23	Si

Verifiche a taglio delle travi in muratura secondo §C8.7.1.3.1 in combinazioni non sismiche

Sezione	γM	N	M	V	Vt	Vp	Vt fess. diag.	Vt,lim	Comb.	c.s.	Verifica
ini.	3	-210	27.82	154			395	155	SLU 1	1.01	Si
fin.	3	451	-134.83	-333			339	0	SLU 1	0	No
ini.	3	-296	27.77	292			418	165	SLU 60	0.56	No
fin.	3	700	-217.69	-565			339	0	SLU 60	0	No
ini.	3	-294	32.71	254			417	165	SLU 53	0.65	No
fin.	3	665	-203	-514			339	0	SLU 53	0	No
ini.	3	-358	48.08	237			434	172	SLU 54	0.72	No
fin.	3	692	-212.02	-529			339	0	SLU 54	0	No
ini.	3	-374	52.78	228			439	173	SLU 59	0.76	No
fin.	3	715	-216.96	-530			339	0	SLU 59	0	No
ini.	3	-405	59.6	224			447	177	SLU 55	0.79	No
fin.	3	718	-219.82	-540			339	0	SLU 55	0	No
ini.	3	-370	51.51	231			437	173	SLU 57	0.75	No
fin.	3	708	-215.17	-529			339	0	SLU 57	0	No
ini.	3	-305	36.14	248			420	166	SLU 56	0.67	No
fin.	3	680	-206.15	-514			339	0	SLU 56	0	No
ini.	3	-361	43.15	276			435	172	SLU 61	0.62	No
fin.	3	727	-226.71	-580			339	0	SLU 61	0	No
ini.	3	-309	37.41	245			421	166	SLU 58	0.68	No
fin.	3	687	-207.94	-515			339	0	SLU 58	0	No

Verifiche a pressoflessione delle travi in muratura in combinazioni sismiche

Sezione	γM	N	M	Mu	Comb.	c.s.	Verifica
ini.	2	1989	-410.98	442.01	SLV 9	1.08	Si
fin.	2	38	114.55	442.01	SLV 9	3.86	Si
ini.	2	-2438	461.52	442.01	SLV 8	0.96	No
fin.	2	973	-424.04	442.01	SLV 8	1.04	Si
ini.	2	1989	-410.98	442.01	SLV 10	1.08	Si
fin.	2	38	114.55	442.01	SLV 10	3.86	Si
ini.	2	-1633	291.95	442.01	SLV 4	1.51	Si
fin.	2	492	-319.16	442.01	SLV 4	1.38	Si
ini.	2	-2438	461.52	442.01	SLV 7	0.96	No
fin.	2	973	-424.04	442.01	SLV 7	1.04	Si
ini.	2	-1633	291.95	442.01	SLV 3	1.51	Si
fin.	2	492	-319.16	442.01	SLV 3	1.38	Si
ini.	2	-1947	371.97	442.01	SLV 11	1.19	Si
fin.	2	1075	-368.9	442.01	SLV 11	1.2	Si
ini.	2	-1947	371.97	442.01	SLV 12	1.19	Si
fin.	2	1075	-368.9	442.01	SLV 12	1.2	Si
ini.	2	1498	-321.44	442.01	SLV 5	1.38	Si
fin.	2	-63	59.42	442.01	SLV 5	7.44	Si
ini.	2	1498	-321.44	442.01	SLV 6	1.38	Si
fin.	2	-63	59.42	442.01	SLV 6	7.44	Si

Verifiche a taglio delle travi in muratura secondo §C8.7.1.3.1 in combinazioni sismiche

Sezione	γM	N	M	V	Vt	Vp	Vt fess. diag.	Vt,lim	Comb.	c.s.	Verifica
ini.	2	1498	-321.44	643			508	0	SLV 6	0	No
fin.	2	-63	59.42	122			525	200	SLV 6	1.65	Si
ini.	2	-1947	371.97	-257			1027	380	SLV 11	1.48	Si
fin.	2	1075	-368.9	-906			508	0	SLV 11	0	No
ini.	2	1184	-241.42	521			508	0	SLV 13	0	No
fin.	2	520	9.67	-338			508	88	SLV 13	0.26	No
ini.	2	-2438	461.52	-363			1158	414	SLV 8	1.14	Si
fin.	2	973	-424.04	-851			508	0	SLV 8	0	No
ini.	2	1498	-321.44	643			508	0	SLV 5	0	No
fin.	2	-63	59.42	122			525	200	SLV 5	1.65	Si

Sezione	γM	N	M	V	Vt	Vp	Vt fess. diag.	Vt,lim	Comb.	c.s.	Verifica
ini.	2	1989	-410.98	749			508	0	SLV 9	0	No
fin.	2	38	114.55	67			508	186	SLV 9	2.79	Si
ini.	2	-2438	461.52	-363			1158	414	SLV 7	1.14	Si
fin.	2	973	-424.04	-851			508	0	SLV 7	0	No
ini.	2	1184	-241.42	521			508	0	SLV 14	0	No
fin.	2	520	9.67	-338			508	88	SLV 14	0.26	No
ini.	2	-1947	371.97	-257			1027	380	SLV 12	1.48	Si
fin.	2	1075	-368.9	-906			508	0	SLV 12	0	No
ini.	2	1989	-410.98	749			508	0	SLV 10	0	No
fin.	2	38	114.55	67			508	186	SLV 10	2.79	Si

Tabella dei coefficienti di sicurezza minimi

Stato limite	Coeff.s.	Comb.	Verifica
PF_SLV	0.958	SLV 7	No
V_SLV	0	SLV 5	No
PF_SLU	1.124	SLU 84	Si
V_SLU	0	SLU 1	No

Trave di accoppiamento 129

Verifiche condotte secondo D.M. 17-01-18 (N.T.C.)

Dati geometrici

X ini.	Y ini.	Z ini.inf.	Z ini.sup.	H ini.	X fin.	Y fin.	Z fin.inf.	Z fin.sup	H fin.	Luce	Spessore	R. Trazione
-8.554	-3.248	10	11.45	1.45	-9.454	-3.248	10	11.45	1.45	0.9	0.28	30000

Caratteristiche del materiale

(Circolare 7 21-01-19 C8.5.I) Muratura in mattoni pieni e malta di calce LC2_Corti

fb_	fhk	fvk0	fhmedio	τ0	fv0	μ	ϕ	fvk,lim	E	G	FC
120000			172500	9000	20000	0.577	0.767	6500	320000000	128000000	1.2

Verifiche a pressoflessione delle travi in muratura in combinazioni non sismiche

Sezione	γM	N	M	Mu	Comb.	c.s.	Verifica
ini.	3	821	373.44	2986.79	SLU 74	8	Si
fin.	3	821	-784.09	2986.79	SLU 74	3.81	Si
ini.	3	880	349.66	2986.79	SLU 78	8.54	Si
fin.	3	880	-759.81	2986.79	SLU 78	3.93	Si
ini.	3	785	398.4	2986.79	SLU 35	7.5	Si
fin.	3	785	-767.75	2986.79	SLU 35	3.89	Si
ini.	3	915	386.5	2986.79	SLU 77	7.73	Si
fin.	3	915	-823.8	2986.79	SLU 77	3.63	Si
ini.	3	895	369.15	2986.79	SLU 79	8.09	Si
fin.	3	895	-794.23	2986.79	SLU 79	3.76	Si
ini.	3	725	391.45	2986.79	SLU 81	7.63	Si
fin.	3	725	-771.11	2986.79	SLU 81	3.87	Si
ini.	3	689	416.4	2986.79	SLU 41	7.17	Si
fin.	3	689	-754.77	2986.79	SLU 41	3.96	Si
ini.	3	765	381.05	2986.79	SLU 37	7.84	Si
fin.	3	765	-738.19	2986.79	SLU 37	4.05	Si
ini.	3	819	404.51	2986.79	SLU 83	7.38	Si
fin.	3	819	-810.82	2986.79	SLU 83	3.68	Si
ini.	3	784	367.66	2986.79	SLU 84	8.12	Si
fin.	3	784	-746.84	2986.79	SLU 84	4	Si

Verifiche a taglio delle travi in muratura secondo §C8.7.1.3.1 in combinazioni non sismiche

Sezione	γM	N	M	V	Vt	Vp	Vt fess. diag.	Vt,lim	Comb.	c.s.	Verifica
ini.	3	785	398.4	-423			1564	381	SLU 35	0.9	No
fin.	3	785	-767.75	-2175			1564	381	SLU 35	0.18	No
ini.	3	915	386.5	-363			1564	335	SLU 77	0.92	No
fin.	3	915	-823.8	-2336			1564	335	SLU 77	0.14	No
ini.	3	821	373.44	-305			1564	369	SLU 74	1.21	Si
fin.	3	821	-784.09	-2277			1564	369	SLU 74	0.16	No
ini.	3	786	336.6	-192			1564	381	SLU 75	1.98	Si
fin.	3	786	-720.1	-2165			1564	381	SLU 75	0.18	No
ini.	3	860	332.31	-199			1564	355	SLU 80	1.79	Si
fin.	3	860	-730.25	-2172			1564	355	SLU 80	0.16	No
ini.	3	895	369.15	-311			1564	342	SLU 79	1.1	Si
fin.	3	895	-794.23	-2284			1564	342	SLU 79	0.15	No
ini.	3	819	404.51	-290			1564	370	SLU 83	1.27	Si
fin.	3	819	-810.82	-2420			1564	370	SLU 83	0.15	No
ini.	3	880	349.66	-251			1564	348	SLU 78	1.39	Si
fin.	3	880	-759.81	-2224			1564	348	SLU 78	0.16	No
ini.	3	725	391.45	-231			1564	401	SLU 81	1.73	Si
fin.	3	725	-771.11	-2362			1564	401	SLU 81	0.17	No
ini.	3	784	367.66	-178			1564	382	SLU 84	2.14	Si
fin.	3	784	-746.84	-2308			1564	382	SLU 84	0.17	No

Verifiche a pressoflessione delle travi in muratura in combinazioni sismiche

Sezione	γM	N	M	Mu	Comb.	c.s.	Verifica
ini.	2	-278	1712.7	4480.18	SLV 5	2.62	Si
fin.	2	-313	-2383.01	4480.18	SLV 5	1.88	Si
ini.	2	1692	3108.31	4480.18	SLV 3	1.44	Si
fin.	2	1133	-4110.52	4480.18	SLV 3	1.09	Si
ini.	2	-36	-3107.54	4480.18	SLV 16	1.44	Si
fin.	2	449	3666.7	4480.18	SLV 16	1.22	Si
ini.	2	-666	-2747.57	4480.18	SLV 13	1.63	Si
fin.	2	-108	3207.69	4480.18	SLV 13	1.4	Si

Sezione	γM	N	M	Mu	Comb.	c.s.	Verifica
ini.	2	-36	-3107.54	4480.18	SLV 15	1.44	Si
fin.	2	449	3666.7	4480.18	SLV 15	1.22	Si
ini.	2	-666	-2747.57	4480.18	SLV 14	1.63	Si
fin.	2	-108	3207.69	4480.18	SLV 14	1.4	Si
ini.	2	-278	1712.7	4480.18	SLV 6	2.62	Si
fin.	2	-313	-2383.01	4480.18	SLV 6	1.88	Si
ini.	2	1692	3108.31	4480.18	SLV 4	1.44	Si
fin.	2	1133	-4110.52	4480.18	SLV 4	1.09	Si
ini.	2	1062	3468.28	4480.18	SLV 1	1.29	Si
fin.	2	576	-4569.53	4480.18	SLV 1	0.98	No
ini.	2	1062	3468.28	4480.18	SLV 2	1.29	Si
fin.	2	576	-4569.53	4480.18	SLV 2	0.98	No

Verifiche a taglio delle travi in muratura secondo §C8.7.1.3.1 in combinazioni sismiche

Sezione	γM	N	M	V	Vt	Vp	Vt fess. diag.	Vt,lim	Comb.	c.s.	Verifica
ini.	2	1062	3468.28	-8407			2345	610	SLV 1	0.07	No
fin.	2	576	-4569.53	-9653			2345	747	SLV 1	0.08	No
ini.	2	1692	3108.31	-7967			2345	360	SLV 3	0.05	No
fin.	2	1133	-4110.52	-8997			2345	587	SLV 3	0.07	No
ini.	2	1822	512.8	-1771			2345	283	SLV 8	0.16	No
fin.	2	1544	-852.98	-2644			2345	432	SLV 8	0.16	No
ini.	2	-666	-2747.57	7830			2612	1017	SLV 13	0.13	No
fin.	2	-108	3207.69	6312			2389	906	SLV 13	0.14	No
ini.	2	1062	3468.28	-8407			2345	610	SLV 2	0.07	No
fin.	2	576	-4569.53	-9653			2345	747	SLV 2	0.08	No
ini.	2	1822	512.8	-1771			2345	283	SLV 7	0.16	No
fin.	2	1544	-852.98	-2644			2345	432	SLV 7	0.16	No
ini.	2	-36	-3107.54	8270			2360	891	SLV 16	0.11	No
fin.	2	449	3666.7	6968			2345	779	SLV 16	0.11	No
ini.	2	-36	-3107.54	8270			2360	891	SLV 15	0.11	No
fin.	2	449	3666.7	6968			2345	779	SLV 15	0.11	No
ini.	2	1692	3108.31	-7967			2345	360	SLV 4	0.05	No
fin.	2	1133	-4110.52	-8997			2345	587	SLV 4	0.07	No
ini.	2	-666	-2747.57	7830			2612	1017	SLV 14	0.13	No
fin.	2	-108	3207.69	6312			2389	906	SLV 14	0.14	No

Tabella dei coefficienti di sicurezza minimi

Stato limite	Coeff.s.	Comb.	Verifica
PF_SLV	0.98	SLV 1	No
V_SLV	0.045	SLV 3	No
PF_SLU	3.626	SLU 77	Si
V_SLU	0.143	SLU 77	No

Trave di accoppiamento 130

Verifiche condotte secondo D.M. 17-01-18 (N.T.C.)

Dati geometrici

X ini.	Y ini.	Z ini.inf.	Z ini.sup.	H ini.	X fin.	Y fin.	Z fin.inf.	Z fin.sup	H fin.	Luce	Spessore	R. Trazione
-7.723	-4.589	11.01	11.45	0.44	-7.723	-3.499	11.01	11.45	0.44	1.09	0.3	30000

Caratteristiche del materiale

(Circolare 7 21-01-19 C8.5.I) Muratura in mattoni pieni e malta di calce LC2_Corti

fb_	fhk	fvk0	fhmedio	τ0	fv0	μ	ϕ	fvk,lim	E	G	FC
120000			172500	9000	20000	0.577	0.767	6500	320000000	128000000	1.2

Verifiche a pressoflessione delle travi in muratura in combinazioni non sismiche

Sezione	γM	N	M	Mu	Comb.	c.s.	Verifica
ini.	3	223	-87.07	294.67	SLU 76	3.38	Si
fin.	3	156	-24.52	294.67	SLU 76	12.02	Si
ini.	3	227	-86.63	294.67	SLU 31	3.4	Si
fin.	3	131	-7.22	294.67	SLU 31	40.82	Si
ini.	3	220	-82.74	294.67	SLU 23	3.56	Si
fin.	3	122	-4.51	294.67	SLU 23	65.34	Si
ini.	3	220	-83.32	294.67	SLU 13	3.54	Si
fin.	3	131	-8.6	294.67	SLU 13	34.25	Si
ini.	3	216	-83.18	294.67	SLU 68	3.54	Si
fin.	3	147	-21.81	294.67	SLU 68	13.51	Si
ini.	3	222	-83.72	294.67	SLU 26	3.52	Si
fin.	3	133	-9.99	294.67	SLU 26	29.51	Si
ini.	3	218	-82.34	294.67	SLU 10	3.58	Si
fin.	3	119	-3.13	294.67	SLU 10	94.23	Si
ini.	3	214	-82.78	294.67	SLU 55	3.56	Si
fin.	3	144	-20.42	294.67	SLU 55	14.43	Si
ini.	3	222	-86.09	294.67	SLU 73	3.42	Si
fin.	3	145	-19.04	294.67	SLU 73	15.48	Si
ini.	3	228	-87.6	294.67	SLU 34	3.36	Si
fin.	3	142	-12.69	294.67	SLU 34	23.21	Si

Verifiche a taglio delle travi in muratura secondo §C8.7.1.3.1 in combinazioni non sismiche

Sezione	γM	N	M	V	Vt	Vp	Vt fess. diag.	Vt,lim	Comb.	c.s.	Verifica
ini.	3	8	-13.87	-247			339	126	SLU 77	0.51	No
fin.	3	118	-74.24	-198			339	109	SLU 77	0.55	No
ini.	3	-1	-9.59	-237			339	128	SLU 56	0.54	No
fin.	3	106	-70.15	-196			339	111	SLU 56	0.57	No
ini.	3	1	-9.99	-241			339	127	SLU 69	0.53	No
fin.	3	109	-71.53	-197			339	111	SLU 69	0.56	No

Sezione	γM	N	M	V	Vt	Vp	Vt fess. diag.	Vt,lim	Comb.	c.s.	Verifica
ini.	3	-2	-8.81	-243			339	128	SLU 71	0.53	No
fin.	3	107	-70.94	-197			339	111	SLU 71	0.56	No
ini.	3	-11	-4.52	-233			342	129	SLU 50	0.55	No
fin.	3	95	-66.85	-195			339	113	SLU 50	0.58	No
ini.	3	7	-12.9	-227			339	127	SLU 74	0.56	No
fin.	3	107	-68.77	-195			339	111	SLU 74	0.57	No
ini.	3	6	-13.38	-232			339	127	SLU 83	0.55	No
fin.	3	109	-69.34	-195			339	111	SLU 83	0.57	No
ini.	3	5	-12.69	-249			339	127	SLU 79	0.51	No
fin.	3	116	-73.65	-198			339	109	SLU 79	0.55	No
ini.	3	-7	-5.71	-231			341	129	SLU 48	0.56	No
fin.	3	97	-67.44	-195			339	113	SLU 48	0.58	No
ini.	3	-4	-8.41	-239			340	128	SLU 58	0.54	No
fin.	3	104	-69.56	-196			339	111	SLU 58	0.57	No

Verifiche a pressoflessione delle travi in muratura in combinazioni sismiche

Sezione	γM	N	M	Mu	Comb.	c.s.	Verifica
ini.	2	2380	-1072.18	442.01	SLV 7	0.41	No
fin.	2	78	-363.21	442.01	SLV 7	1.22	Si
ini.	2	2380	-1072.18	442.01	SLV 8	0.41	No
fin.	2	78	-363.21	442.01	SLV 8	1.22	Si
ini.	2	1960	-901.83	442.01	SLV 12	0.49	No
fin.	2	325	-239.96	442.01	SLV 12	1.84	Si
ini.	2	1960	-901.83	442.01	SLV 11	0.49	No
fin.	2	325	-239.96	442.01	SLV 11	1.84	Si
ini.	2	-2387	1061.29	442.01	SLV 9	0.42	No
fin.	2	52	271.17	442.01	SLV 9	1.63	Si
ini.	2	-2387	1061.29	442.01	SLV 10	0.42	No
fin.	2	52	271.17	442.01	SLV 10	1.63	Si
ini.	2	-1967	890.94	442.01	SLV 5	0.5	No
fin.	2	-195	147.91	442.01	SLV 5	2.99	Si
ini.	2	1348	-583.84	442.01	SLV 3	0.76	No
fin.	2	-306	-328.11	442.01	SLV 3	1.35	Si
ini.	2	-1967	890.94	442.01	SLV 6	0.5	No
fin.	2	-195	147.91	442.01	SLV 6	2.99	Si
ini.	2	1348	-583.84	442.01	SLV 4	0.76	No
fin.	2	-306	-328.11	442.01	SLV 4	1.35	Si

Verifiche a taglio delle travi in muratura secondo §C8.7.1.3.1 in combinazioni sismiche

Sezione	γM	N	M	V	Vt	Vp	Vt fess. diag.	Vt,lim	Comb.	c.s.	Verifica
ini.	2	-1967	890.94	-3487			1033	382	SLV 5	0.11	No
fin.	2	-195	147.91	-59			560	218	SLV 5	3.67	Si
ini.	2	44	5.1	-1890			508	185	SLV 2	0.1	No
fin.	2	-388	-174.77	-93			612	241	SLV 2	2.59	Si
ini.	2	1960	-901.83	3176			508	0	SLV 12	0	No
fin.	2	325	-239.96	-233			508	136	SLV 12	0.59	No
ini.	2	2380	-1072.18	2691			508	0	SLV 8	0	No
fin.	2	78	-363.21	-215			508	180	SLV 8	0.83	No
ini.	2	44	5.1	-1890			508	185	SLV 1	0.1	No
fin.	2	-388	-174.77	-93			612	241	SLV 1	2.59	Si
ini.	2	1348	-583.84	-37			508	0	SLV 4	0	No
fin.	2	-306	-328.11	-140			590	231	SLV 4	1.65	Si
ini.	2	1348	-583.84	-37			508	0	SLV 3	0	No
fin.	2	-306	-328.11	-140			590	231	SLV 3	1.65	Si
ini.	2	-1967	890.94	-3487			1033	382	SLV 6	0.11	No
fin.	2	-195	147.91	-59			560	218	SLV 6	3.67	Si
ini.	2	1960	-901.83	3176			508	0	SLV 11	0	No
fin.	2	325	-239.96	-233			508	136	SLV 11	0.59	No
ini.	2	2380	-1072.18	2691			508	0	SLV 7	0	No
fin.	2	78	-363.21	-215			508	180	SLV 7	0.83	No

Tabella dei coefficienti di sicurezza minimi

Stato limite	Coeff.s.	Comb.	Verifica
PF_SLV	0.412	SLV 7	No
V_SLV	0	SLV 3	No
PF_SLU	3.364	SLU 34	Si
V_SLU	0.509	SLU 79	No

Trave di accoppiamento 131

Verifiche condotte secondo D.M. 17-01-18 (N.T.C.)

Dati geometrici

X ini.	Y ini.	Z ini.inf.	Z ini.sup.	H ini.	X fin.	Y fin.	Z fin.inf.	Z fin.sup	H fin.	Luce	Spessore	R. Trazione
-5.158	1.405	10	11.45	1.45	-5.158	2.105	10	11.45	1.45	0.7	0.14	30000

Caratteristiche del materiale

(Circolare 7 21-01-19 C8.5.I) Muratura in mattoni pieni e malta di calce LC2_Corti

fb_	fhk	fvk0	fhmedio	τ0	fv0	μ	ϕ	fvk,lim	E	G	FC
120000			172500	9000	20000	0.577	0.767	6500	320000000	128000000	1.2

Verifiche a pressoflessione delle travi in muratura in combinazioni non sismiche

Sezione	γM	N	M	Mu	Comb.	c.s.	Verifica
ini.	3	16	-43.74	1493.39	SLU 83	34.14	Si
fin.	3	16	-1309.89	1493.39	SLU 83	1.14	Si
ini.	3	-3	-45.53	1493.39	SLU 84	32.8	Si
fin.	3	-3	-1305.84	1493.39	SLU 84	1.14	Si

Sezione	γM	N	M	Mu	Comb.	c.s.	Verifica
ini.	3	6	-42.46	1493.39	SLU 77	35.17	Si
fin.	3	6	-1281.91	1493.39	SLU 77	1.16	Si
ini.	3	-3	-46.46	1493.39	SLU 82	32.14	Si
fin.	3	-3	-1258.16	1493.39	SLU 82	1.19	Si
ini.	3	11	-40.51	1493.39	SLU 79	36.87	Si
fin.	3	11	-1232.41	1493.39	SLU 79	1.21	Si
ini.	3	-13	-45.18	1493.39	SLU 75	33.05	Si
fin.	3	-13	-1230.18	1493.39	SLU 75	1.21	Si
ini.	3	16	-44.67	1493.39	SLU 81	33.43	Si
fin.	3	16	-1262.22	1493.39	SLU 81	1.18	Si
ini.	3	-7	-42.3	1493.39	SLU 80	35.31	Si
fin.	3	-7	-1228.35	1493.39	SLU 80	1.22	Si
ini.	3	6	-43.39	1493.39	SLU 74	34.42	Si
fin.	3	6	-1234.24	1493.39	SLU 74	1.21	Si
ini.	3	-12	-44.25	1493.39	SLU 78	33.75	Si
fin.	3	-12	-1277.85	1493.39	SLU 78	1.17	Si

Verifiche a taglio delle travi in muratura secondo §C8.7.1.3.1 in combinazioni non sismiche

Sezione	γM	N	M	V	Vt	Vp	Vt fess. diag.	Vt,lim	Comb.	c.s.	Verifica
ini.	3	16	-44.67	-1562			782	291	SLU 81	0.19	No
fin.	3	16	-1262.22	-1937			782	291	SLU 81	0.15	No
ini.	3	6	-43.39	-1524			782	293	SLU 74	0.19	No
fin.	3	6	-1234.24	-1899			782	293	SLU 74	0.15	No
ini.	3	-7	-42.3	-1517			785	296	SLU 80	0.19	No
fin.	3	-7	-1228.35	-1892			785	296	SLU 80	0.16	No
ini.	3	11	-40.51	-1525			782	292	SLU 79	0.19	No
fin.	3	11	-1232.41	-1900			782	292	SLU 79	0.15	No
ini.	3	-12	-44.25	-1585			787	297	SLU 78	0.19	No
fin.	3	-12	-1277.85	-1960			787	297	SLU 78	0.15	No
ini.	3	-13	-45.18	-1515			787	297	SLU 75	0.2	No
fin.	3	-13	-1230.18	-1891			787	297	SLU 75	0.16	No
ini.	3	-3	-45.53	-1623			783	295	SLU 84	0.18	No
fin.	3	-3	-1305.84	-1998			783	295	SLU 84	0.15	No
ini.	3	-3	-46.46	-1553			783	295	SLU 82	0.19	No
fin.	3	-3	-1258.16	-1929			783	295	SLU 82	0.15	No
ini.	3	16	-43.74	-1631			782	291	SLU 83	0.18	No
fin.	3	16	-1309.89	-2006			782	291	SLU 83	0.14	No
ini.	3	6	-42.46	-1593			782	293	SLU 77	0.18	No
fin.	3	6	-1281.91	-1968			782	293	SLU 77	0.15	No

Verifiche a pressoflessione delle travi in muratura in combinazioni sismiche

Sezione	γM	N	M	Mu	Comb.	c.s.	Verifica
ini.	2	852	-546.06	2240.09	SLV 9	4.1	Si
fin.	2	873	4609.53	2240.09	SLV 9	0.49	No
ini.	2	-758	484.54	2240.09	SLV 15	4.62	Si
fin.	2	-469	-3846.4	2240.09	SLV 15	0.58	No
ini.	2	1130	-743.37	2240.09	SLV 6	3.01	Si
fin.	2	988	5474.89	2240.09	SLV 6	0.41	No
ini.	2	-847	488.01	2240.09	SLV 8	4.59	Si
fin.	2	-869	-5981.04	2240.09	SLV 8	0.37	No
ini.	2	852	-546.06	2240.09	SLV 10	4.1	Si
fin.	2	873	4609.53	2240.09	SLV 10	0.49	No
ini.	2	-847	488.01	2240.09	SLV 7	4.59	Si
fin.	2	-869	-5981.04	2240.09	SLV 7	0.37	No
ini.	2	-1125	685.32	2240.09	SLV 11	3.27	Si
fin.	2	-984	-6846.39	2240.09	SLV 11	0.33	No
ini.	2	-1125	685.32	2240.09	SLV 12	3.27	Si
fin.	2	-984	-6846.39	2240.09	SLV 12	0.33	No
ini.	2	-758	484.54	2240.09	SLV 16	4.62	Si
fin.	2	-469	-3846.4	2240.09	SLV 16	0.58	No
ini.	2	1130	-743.37	2240.09	SLV 5	3.01	Si
fin.	2	988	5474.89	2240.09	SLV 5	0.41	No

Verifiche a taglio delle travi in muratura secondo §C8.7.1.3.1 in combinazioni sismiche

Sezione	γM	N	M	V	Vt	Vp	Vt fess. diag.	Vt,lim	Comb.	c.s.	Verifica
ini.	2	-847	488.01	-8889			1512	598	SLV 8	0.07	No
fin.	2	-869	-5981.04	-9241			1520	601	SLV 8	0.07	No
ini.	2	1130	-743.37	8868			1173	0	SLV 5	0	No
fin.	2	988	5474.89	8625			1173	72	SLV 5	0.01	No
ini.	2	852	-546.06	7284			1173	177	SLV 10	0.02	No
fin.	2	873	4609.53	7062			1173	165	SLV 10	0.02	No
ini.	2	-847	488.01	-8889			1512	598	SLV 7	0.07	No
fin.	2	-869	-5981.04	-9241			1520	601	SLV 7	0.07	No
ini.	2	-1125	685.32	-10473			1623	641	SLV 12	0.06	No
fin.	2	-984	-6846.39	-10804			1566	619	SLV 12	0.06	No
ini.	2	762	-542.59	4500			1173	220	SLV 2	0.05	No
fin.	2	473	2474.9	4196			1173	323	SLV 2	0.08	No
ini.	2	762	-542.59	4500			1173	220	SLV 1	0.05	No
fin.	2	473	2474.9	4196			1173	323	SLV 1	0.08	No
ini.	2	852	-546.06	7284			1173	177	SLV 9	0.02	No
fin.	2	873	4609.53	7062			1173	165	SLV 9	0.02	No
ini.	2	1130	-743.37	8868			1173	0	SLV 6	0	No
fin.	2	988	5474.89	8625			1173	72	SLV 6	0.01	No
ini.	2	-1125	685.32	-10473			1623	641	SLV 11	0.06	No
fin.	2	-984	-6846.39	-10804			1566	619	SLV 11	0.06	No

Tabella dei coefficienti di sicurezza minimi

Stato limite	Coeff.s.	Comb.	Verifica
PF_SLV	0.327	SLV 11	No
V_SLV	0	SLV 5	No

Stato limite	Coeff.s.	Comb.	Verifica
PF_SLU	1.14	SLU 83	Si
V_SLU	0.145	SLU 83	No

Trave di accoppiamento 132

Verifiche condotte secondo D.M. 17-01-18 (N.T.C.)

Dati geometrici

X ini.	Y ini.	Z ini.inf.	Z ini.sup.	H ini.	X fin.	Y fin.	Z fin.inf.	Z fin.sup	H fin.	Luce	Spessore	R. Trazione
-6.464	-3.248	7.9	8.8	0.9	-7.464	-3.248	7.9	8.8	0.9	1	0.28	30000

Caratteristiche del materiale

(Circolare 7 21-01-19 C8.5.I) Muratura in mattoni pieni e malta di calce LC2_Corti

fb_	fhk	fvk0	fhmedio	τ0	fv0	μ	ϕ	fvk,lim	E	G	FC
120000			172500	9000	20000	0.577	0.767	6500	320000000	128000000	1.2

Verifiche a pressoflessione delle travi in muratura in combinazioni non sismiche

Sezione	γM	N	M	Mu	Comb.	c.s.	Verifica
ini.	3	862	-6.92	1150.68	SLU 59	166.18	Si
fin.	3	-78	158.56	1150.68	SLU 59	7.26	Si
ini.	3	979	-8.29	1150.68	SLU 80	138.76	Si
fin.	3	-56	158.35	1150.68	SLU 80	7.27	Si
ini.	3	888	-9.34	1150.68	SLU 63	123.15	Si
fin.	3	-97	160.85	1150.68	SLU 63	7.15	Si
ini.	3	964	-6.27	1150.68	SLU 82	183.47	Si
fin.	3	-89	156.55	1150.68	SLU 82	7.35	Si
ini.	3	847	-4.9	1150.68	SLU 61	234.68	Si
fin.	3	-111	156.77	1150.68	SLU 61	7.34	Si
ini.	3	861	0.11	1150.68	SLU 73	10136.05	Si
fin.	3	-139	156.54	1150.68	SLU 73	7.35	Si
ini.	3	744	1.48	1150.68	SLU 52	776.46	Si
fin.	3	-161	156.76	1150.68	SLU 52	7.34	Si
ini.	3	902	-4.33	1150.68	SLU 76	265.93	Si
fin.	3	-125	160.62	1150.68	SLU 76	7.16	Si
ini.	3	785	-2.96	1150.68	SLU 55	388.93	Si
fin.	3	-147	160.84	1150.68	SLU 55	7.15	Si
ini.	3	1005	-10.71	1150.68	SLU 84	107.42	Si
fin.	3	-75	160.63	1150.68	SLU 84	7.16	Si

Verifiche a taglio delle travi in muratura secondo §C8.7.1.3.1 in combinazioni non sismiche

Sezione	γM	N	M	V	Vt	Vp	Vt fess. diag.	Vt,lim	Comb.	c.s.	Verifica
ini.	3	879	2.53	-691			873	0	SLU 53	0	No
fin.	3	5	140.38	1190			873	328	SLU 53	0.28	No
ini.	3	853	-12.96	-467			873	0	SLU 38	0	No
fin.	3	-47	129.21	1063			890	338	SLU 38	0.32	No
ini.	3	867	-2.62	-677			873	0	SLU 57	0	No
fin.	3	-63	153.99	1243			896	341	SLU 57	0.27	No
ini.	3	907	-12.25	-501			873	0	SLU 37	0	No
fin.	3	35	119.67	1063			873	322	SLU 37	0.3	No
ini.	3	1058	-10	-611			873	0	SLU 83	0	No
fin.	3	7	151.1	1276			873	327	SLU 83	0.26	No
ini.	3	920	-1.91	-711			873	0	SLU 56	0	No
fin.	3	19	144.46	1243			873	325	SLU 56	0.26	No
ini.	3	880	-15.38	-410			873	0	SLU 42	0	No
fin.	3	-66	131.49	1049			897	341	SLU 42	0.33	No
ini.	3	892	-10.23	-423			873	0	SLU 39	0	No
fin.	3	2	117.88	996			873	328	SLU 39	0.33	No
ini.	3	858	-8.66	-505			873	0	SLU 36	0	No
fin.	3	-32	124.64	1065			885	335	SLU 36	0.31	No
ini.	3	933	-14.67	-443			873	0	SLU 41	0	No
fin.	3	16	121.96	1049			873	326	SLU 41	0.31	No

Verifiche a pressoflessione delle travi in muratura in combinazioni sismiche

Sezione	γM	N	M	Mu	Comb.	c.s.	Verifica
ini.	2	3616	-1167.59	1726.01	SLV 13	1.48	Si
fin.	2	-2502	1843.62	1726.01	SLV 13	0.94	No
ini.	2	4219	-1370.96	1726.01	SLV 15	1.26	Si
fin.	2	-2841	2006	1726.01	SLV 15	0.86	No
ini.	2	2619	-713.41	1726.01	SLV 11	2.42	Si
fin.	2	-1367	918.82	1726.01	SLV 11	1.88	Si
ini.	2	2619	-713.41	1726.01	SLV 12	2.42	Si
fin.	2	-1367	918.82	1726.01	SLV 12	1.88	Si
ini.	2	-2960	1389.04	1726.01	SLV 1	1.24	Si
fin.	2	2837	-1803.88	1726.01	SLV 1	0.96	No
ini.	2	4219	-1370.96	1726.01	SLV 16	1.26	Si
fin.	2	-2841	2006	1726.01	SLV 16	0.86	No
ini.	2	-2960	1389.04	1726.01	SLV 2	1.24	Si
fin.	2	2837	-1803.88	1726.01	SLV 2	0.96	No
ini.	2	-2358	1185.67	1726.01	SLV 3	1.46	Si
fin.	2	2498	-1641.5	1726.01	SLV 3	1.05	Si
ini.	2	3616	-1167.59	1726.01	SLV 14	1.48	Si
fin.	2	-2502	1843.62	1726.01	SLV 14	0.94	No
ini.	2	-2358	1185.67	1726.01	SLV 4	1.46	Si
fin.	2	2498	-1641.5	1726.01	SLV 4	1.05	Si

Verifiche a taglio delle travi in muratura secondo §C8.7.1.3.1 in combinazioni sismiche

Sezione	γM	N	M	V	Vt	Vp	Vt fess. diag.	Vt,lim	Comb.	c.s.	Verifica
ini.	2	2619	-713.41	2862			1310	0	SLV 12	0	No
fin.	2	-1367	918.82	5002			1802	712	SLV 12	0.14	No
ini.	2	-1361	731.49	-3915			1800	711	SLV 6	0.18	No
fin.	2	1363	-716.7	-3295			1310	0	SLV 6	0	No
ini.	2	3616	-1167.59	4291			1310	0	SLV 13	0	No
fin.	2	-2502	1843.62	6529			2211	852	SLV 13	0.13	No
ini.	2	-1361	731.49	-3915			1800	711	SLV 5	0.18	No
fin.	2	1363	-716.7	-3295			1310	0	SLV 5	0	No
ini.	2	-2960	1389.04	-6414			2376	902	SLV 1	0.14	No
fin.	2	2837	-1803.88	-6169			1310	0	SLV 1	0	No
ini.	2	2619	-713.41	2862			1310	0	SLV 11	0	No
fin.	2	-1367	918.82	5002			1802	712	SLV 11	0.14	No
ini.	2	-2358	1185.67	-5344			2159	835	SLV 4	0.16	No
fin.	2	2498	-1641.5	-4822			1310	0	SLV 4	0	No
ini.	2	3616	-1167.59	4291			1310	0	SLV 14	0	No
fin.	2	-2502	1843.62	6529			2211	852	SLV 14	0.13	No
ini.	2	-2358	1185.67	-5344			2159	835	SLV 3	0.16	No
fin.	2	2498	-1641.5	-4822			1310	0	SLV 3	0	No
ini.	2	-2960	1389.04	-6414			2376	902	SLV 2	0.14	No
fin.	2	2837	-1803.88	-6169			1310	0	SLV 2	0	No

Tabella dei coefficienti di sicurezza minimi

Stato limite	Coeff.s.	Comb.	Verifica
PF_SLV	0.86	SLV 15	No
V_SLV	0	SLV 1	No
PF_SLU	7.154	SLU 63	Si
V_SLU	0	SLU 32	No

Trave di accoppiamento 133

Verifiche condotte secondo D.M. 17-01-18 (N.T.C.)

Dati geometrici

X ini.	Y ini.	Z ini.inf.	Z ini.sup.	H ini.	X fin.	Y fin.	Z fin.inf.	Z fin.sup	H fin.	Luce	Spessore	R. Trazione
-6.464	-3.248	10.7	11.45	0.75	-7.464	-3.248	10.7	11.45	0.75	1	0.28	30000

Caratteristiche del materiale

(Circolare 7 21-01-19 C8.5.I) Muratura in mattoni pieni e malta di calce LC2_Corti

fb_	fhk	fvk0	fhmedio	τ0	fv0	μ	ϕ	fvk,lim	E	G	FC
120000			172500	9000	20000	0.577	0.767	6500	320000000	128000000	1.2

Verifiche a pressoflessione delle travi in muratura in combinazioni non sismiche

Sezione	γM	N	M	Mu	Comb.	c.s.	Verifica
ini.	3	321	-186.5	799.08	SLU 56	4.28	Si
fin.	3	838	86.13	799.08	SLU 56	9.28	Si
ini.	3	322	-202.82	799.08	SLU 79	3.94	Si
fin.	3	871	97.64	799.08	SLU 79	8.18	Si
ini.	3	254	-186.94	799.08	SLU 81	4.27	Si
fin.	3	748	83.95	799.08	SLU 81	9.52	Si
ini.	3	243	-188.43	799.08	SLU 75	4.24	Si
fin.	3	810	82.01	799.08	SLU 75	9.74	Si
ini.	3	335	-204.36	799.08	SLU 77	3.91	Si
fin.	3	882	97.72	799.08	SLU 77	8.18	Si
ini.	3	280	-200.24	799.08	SLU 83	3.99	Si
fin.	3	823	94.85	799.08	SLU 83	8.42	Si
ini.	3	215	-197.59	799.08	SLU 84	4.04	Si
fin.	3	826	90.04	799.08	SLU 84	8.87	Si
ini.	3	309	-191.07	799.08	SLU 74	4.18	Si
fin.	3	807	86.82	799.08	SLU 74	9.2	Si
ini.	3	269	-201.72	799.08	SLU 78	3.96	Si
fin.	3	885	92.91	799.08	SLU 78	8.6	Si
ini.	3	256	-200.18	799.08	SLU 80	3.99	Si
fin.	3	875	92.83	799.08	SLU 80	8.61	Si

Verifiche a taglio delle travi in muratura secondo §C8.7.1.3.1 in combinazioni non sismiche

Sezione	γM	N	M	V	Vt	Vp	Vt fess. diag.	Vt,lim	Comb.	c.s.	Verifica
ini.	3	321	-186.5	2078			607	168	SLU 56	0.08	No
fin.	3	838	86.13	-777			607	0	SLU 56	0	No
ini.	3	215	-197.59	2172			607	190	SLU 84	0.09	No
fin.	3	826	90.04	-781			607	0	SLU 84	0	No
ini.	3	243	-182.31	1971			607	185	SLU 59	0.09	No
fin.	3	831	81.24	-702			607	0	SLU 59	0	No
ini.	3	229	-170.56	1877			607	187	SLU 54	0.1	No
fin.	3	766	70.42	-718			607	0	SLU 54	0	No
ini.	3	175	-166.43	1827			607	198	SLU 61	0.11	No
fin.	3	707	67.55	-698			607	0	SLU 61	0	No
ini.	3	240	-169.08	1899			607	185	SLU 60	0.1	No
fin.	3	704	72.36	-748			607	0	SLU 60	0	No
ini.	3	266	-182.37	2027			607	180	SLU 62	0.09	No
fin.	3	779	83.26	-758			607	0	SLU 62	0	No
ini.	3	308	-184.96	2043			607	171	SLU 58	0.08	No
fin.	3	827	86.05	-752			607	0	SLU 58	0	No
ini.	3	173	-167.25	1795			607	198	SLU 55	0.11	No
fin.	3	758	67.13	-659			607	0	SLU 55	0	No
ini.	3	255	-183.86	2005			607	182	SLU 57	0.09	No

Sezione	γM	N	M	V	Vt	Vp	Vt fess. diag.	Vt,lim	Comb.	c.s.	Verifica
fin.	3	841	81.32	-728			607	0	SLU 57	0	No

Verifiche a pressoflessione delle travi in muratura in combinazioni sismiche

Sezione	γM	N	M	Mu	Comb.	c.s.	Verifica
ini.	2	3991	711.24	1198.62	SLV 1	1.69	Si
fin.	2	-1233	-629.65	1198.62	SLV 1	1.9	Si
ini.	2	3461	583.39	1198.62	SLV 4	2.05	Si
fin.	2	-851	-488.78	1198.62	SLV 4	2.45	Si
ini.	2	-3016	-822.5	1198.62	SLV 14	1.46	Si
fin.	2	1882	582.06	1198.62	SLV 14	2.06	Si
ini.	2	3461	583.39	1198.62	SLV 3	2.05	Si
fin.	2	-851	-488.78	1198.62	SLV 3	2.45	Si
ini.	2	3991	711.24	1198.62	SLV 2	1.69	Si
fin.	2	-1233	-629.65	1198.62	SLV 2	1.9	Si
ini.	2	-1713	-562.68	1198.62	SLV 11	2.13	Si
fin.	2	1621	463.18	1198.62	SLV 11	2.59	Si
ini.	2	-3547	-950.34	1198.62	SLV 15	1.26	Si
fin.	2	2264	722.92	1198.62	SLV 15	1.66	Si
ini.	2	-3547	-950.34	1198.62	SLV 16	1.26	Si
fin.	2	2264	722.92	1198.62	SLV 16	1.66	Si
ini.	2	-3016	-822.5	1198.62	SLV 13	1.46	Si
fin.	2	1882	582.06	1198.62	SLV 13	2.06	Si
ini.	2	-1713	-562.68	1198.62	SLV 12	2.13	Si
fin.	2	1621	463.18	1198.62	SLV 12	2.59	Si

Verifiche a taglio delle travi in muratura secondo §C8.7.1.3.1 in combinazioni sismiche

Sezione	γM	N	M	V	Vt	Vp	Vt fess. diag.	Vt,lim	Comb.	c.s.	Verifica
ini.	2	3461	583.39	-2049			910	0	SLV 4	0	No
fin.	2	-851	-488.78	-3416			1165	461	SLV 4	0.13	No
ini.	2	3461	583.39	-2049			910	0	SLV 3	0	No
fin.	2	-851	-488.78	-3416			1165	461	SLV 3	0.13	No
ini.	2	2157	323.58	-1007			910	0	SLV 5	0	No
fin.	2	-589	-369.9	-2041			1087	428	SLV 5	0.21	No
ini.	2	-1713	-562.68	3739			1424	555	SLV 12	0.15	No
fin.	2	1621	463.18	869			910	0	SLV 12	0	No
ini.	2	-3016	-822.5	4781			1815	674	SLV 13	0.14	No
fin.	2	1882	582.06	2244			910	0	SLV 13	0	No
ini.	2	3991	711.24	-2791			910	0	SLV 2	0	No
fin.	2	-1233	-629.65	-3750			1280	505	SLV 2	0.13	No
ini.	2	3991	711.24	-2791			910	0	SLV 1	0	No
fin.	2	-1233	-629.65	-3750			1280	505	SLV 1	0.13	No
ini.	2	-3016	-822.5	4781			1815	674	SLV 14	0.14	No
fin.	2	1882	582.06	2244			910	0	SLV 14	0	No
ini.	2	-1713	-562.68	3739			1424	555	SLV 11	0.15	No
fin.	2	1621	463.18	869			910	0	SLV 11	0	No
ini.	2	2157	323.58	-1007			910	0	SLV 6	0	No
fin.	2	-589	-369.9	-2041			1087	428	SLV 6	0.21	No

Tabella dei coefficienti di sicurezza minimi

Stato limite	Coeff.s.	Comb.	Verifica
PF_SLV	1.261	SLV 15	Si
V_SLV	0	SLV 1	No
PF_SLU	3.91	SLU 77	Si
V_SLU	0	SLU 14	No

Trave di accoppiamento 134

Verifiche condotte secondo D.M. 17-01-18 (N.T.C.)

Dati geometrici

X ini.	Y ini.	Z ini.inf.	Z ini.sup.	H ini.	X fin.	Y fin.	Z fin.inf.	Z fin.sup	H fin.	Luce	Spessore	R. Trazione
-5.454	-3.248	7.9	9.9	2	-5.954	-3.248	7.9	9.9	2	0.5	0.28	30000

Caratteristiche del materiale

(Circolare 7 21-01-19 C8.5.I) Muratura in mattoni pieni e malta di calce LC2_Corti

fb_	fhk	fvk0	fhmedio	τ0	fv0	μ	ϕ	fvk,lim	E	G	FC
120000			172500	9000	20000	0.577	0.767	6500	320000000	128000000	1.2

Verifiche a pressoflessione delle travi in muratura in combinazioni non sismiche

Sezione	γM	N	M	Mu	Comb.	c.s.	Verifica
ini.	3	819	881.22	5682.35	SLU 74	6.45	Si
fin.	3	1121	767.19	5682.35	SLU 74	7.41	Si
ini.	3	836	892.49	5682.35	SLU 81	6.37	Si
fin.	3	1146	781.52	5682.35	SLU 81	7.27	Si
ini.	3	928	812.38	5682.35	SLU 84	6.99	Si
fin.	3	1145	770.7	5682.35	SLU 84	7.37	Si
ini.	3	873	914.84	5682.35	SLU 83	6.21	Si
fin.	3	1192	798.89	5682.35	SLU 83	7.11	Si
ini.	3	912	801.11	5682.35	SLU 78	7.09	Si
fin.	3	1120	756.36	5682.35	SLU 78	7.51	Si
ini.	3	755	800.6	5682.35	SLU 56	7.1	Si
fin.	3	1028	707.61	5682.35	SLU 56	8.03	Si
ini.	3	772	811.88	5682.35	SLU 62	7	Si
fin.	3	1053	721.95	5682.35	SLU 62	7.87	Si
ini.	3	772	798.24	5682.35	SLU 41	7.12	Si
fin.	3	1055	686.86	5682.35	SLU 41	8.27	Si
ini.	3	854	887.23	5682.35	SLU 79	6.4	Si

Sezione	γM	N	M	Mu	Comb.	c.s.	Verifica
fin.	3	1160	776.91	5682.35	SLU 79	7.31	Si
ini.	3	856	903.57	5682.35	SLU 77	6.29	Si
fin.	3	1167	784.55	5682.35	SLU 77	7.24	Si

Verifiche a taglio delle travi in muratura secondo §C8.7.1.3.1 in combinazioni non sismiche

Sezione	γM	N	M	V	Vt	Vp	Vt fess. diag.	Vt,lim	Comb.	c.s.	Verifica
ini.	3	928	812.38	-698			2157	575	SLU 84	0.82	No
fin.	3	1145	770.7	1424			2157	505	SLU 84	0.35	No
ini.	3	910	694.11	-388			2157	581	SLU 76	1.5	Si
fin.	3	1036	712.56	1691			2157	541	SLU 76	0.32	No
ini.	3	875	778.76	-655			2157	592	SLU 75	0.9	No
fin.	3	1074	739	1442			2157	529	SLU 75	0.37	No
ini.	3	873	671.76	-348			2157	592	SLU 73	1.7	Si
fin.	3	990	695.19	1666			2157	556	SLU 73	0.33	No
ini.	3	809	591.14	-229			2157	611	SLU 55	2.67	Si
fin.	3	898	635.62	1689			2157	585	SLU 55	0.35	No
ini.	3	780	577.52	-208			2157	619	SLU 68	2.97	Si
fin.	3	856	620.73	1721			2157	597	SLU 68	0.35	No
ini.	3	743	555.17	-168			2157	630	SLU 65	3.75	Si
fin.	3	810	603.37	1696			2157	611	SLU 65	0.36	No
ini.	3	912	801.11	-695			2157	581	SLU 78	0.84	No
fin.	3	1120	756.36	1468			2157	513	SLU 78	0.35	No
ini.	3	910	784.77	-661			2157	581	SLU 80	0.88	No
fin.	3	1113	748.72	1462			2157	516	SLU 80	0.35	No
ini.	3	773	568.79	-189			2157	621	SLU 52	3.3	Si
fin.	3	852	618.25	1664			2157	598	SLU 52	0.36	No

Verifiche a pressoflessione delle travi in muratura in combinazioni sismiche

Sezione	γM	N	M	Mu	Comb.	c.s.	Verifica
ini.	2	166	1817.39	8523.53	SLV 7	4.69	Si
fin.	2	1440	276.29	8523.53	SLV 7	30.85	Si
ini.	2	-2027	2396.7	8523.53	SLV 4	3.56	Si
fin.	2	-1129	-514.33	8523.53	SLV 4	16.57	Si
ini.	2	166	1817.39	8523.53	SLV 8	4.69	Si
fin.	2	1440	276.29	8523.53	SLV 8	30.85	Si
ini.	2	-2300	1935.15	8523.53	SLV 2	4.4	Si
fin.	2	-1977	-563.04	8523.53	SLV 2	15.14	Si
ini.	2	3058	-1258.51	8523.53	SLV 14	6.77	Si
fin.	2	2537	1533.52	8523.53	SLV 14	5.56	Si
ini.	2	3330	-796.96	8523.53	SLV 15	10.7	Si
fin.	2	3386	1582.22	8523.53	SLV 15	5.39	Si
ini.	2	-2300	1935.15	8523.53	SLV 1	4.4	Si
fin.	2	-1977	-563.04	8523.53	SLV 1	15.14	Si
ini.	2	3330	-796.96	8523.53	SLV 16	10.7	Si
fin.	2	3386	1582.22	8523.53	SLV 16	5.39	Si
ini.	2	3058	-1258.51	8523.53	SLV 13	6.77	Si
fin.	2	2537	1533.52	8523.53	SLV 13	5.56	Si
ini.	2	-2027	2396.7	8523.53	SLV 3	3.56	Si
fin.	2	-1129	-514.33	8523.53	SLV 3	16.57	Si

Verifiche a taglio delle travi in muratura secondo §C8.7.1.3.1 in combinazioni sismiche

Sezione	γM	N	M	V	Vt	Vp	Vt fess. diag.	Vt,lim	Comb.	c.s.	Verifica
ini.	2	3330	-796.96	4652			3235	0	SLV 15	0	No
fin.	2	3386	1582.22	6794			3235	0	SLV 15	0	No
ini.	2	-2027	2396.7	-7142			4046	1598	SLV 4	0.22	No
fin.	2	-1129	-514.33	-6796			3687	1442	SLV 4	0.21	No
ini.	2	166	1817.39	-4536			3235	1181	SLV 7	0.26	No
fin.	2	1440	276.29	-3923			3235	848	SLV 7	0.22	No
ini.	2	864	-679.21	3351			3235	1012	SLV 9	0.3	No
fin.	2	-32	742.9	5536			3248	1224	SLV 9	0.22	No
ini.	2	3330	-796.96	4652			3235	0	SLV 16	0	No
fin.	2	3386	1582.22	6794			3235	0	SLV 16	0	No
ini.	2	166	1817.39	-4536			3235	1181	SLV 8	0.26	No
fin.	2	1440	276.29	-3923			3235	848	SLV 8	0.22	No
ini.	2	3058	-1258.51	5957			3235	0	SLV 14	0	No
fin.	2	2537	1533.52	8409			3235	373	SLV 14	0.04	No
ini.	2	3058	-1258.51	5957			3235	0	SLV 13	0	No
fin.	2	2537	1533.52	8409			3235	373	SLV 13	0.04	No
ini.	2	-2027	2396.7	-7142			4046	1598	SLV 3	0.22	No
fin.	2	-1129	-514.33	-6796			3687	1442	SLV 3	0.21	No
ini.	2	864	-679.21	3351			3235	1012	SLV 10	0.3	No
fin.	2	-32	742.9	5536			3248	1224	SLV 10	0.22	No

Tabella dei coefficienti di sicurezza minimi

Stato limite	Coeff.s.	Comb.	Verifica
PF_SLV	3.556	SLV 3	Si
V_SLV	0	SLV 13	No
PF_SLU	6.211	SLU 83	Si
V_SLU	0.32	SLU 76	No

Trave di accoppiamento 135

Verifiche condotte secondo D.M. 17-01-18 (N.T.C.)

Dati geometrici

X ini.	Y ini.	Z ini.inf.	Z ini.sup.	H ini.	X fin.	Y fin.	Z fin.inf.	Z fin.sup	H fin.	Luce	Spessore	R. Trazione
-5.454	-3.248	10.7	11.45	0.75	-5.954	-3.248	10.7	11.45	0.75	0.5	0.28	30000

Caratteristiche del materiale

(Circolare 7 21-01-19 C8.5.I) Muratura in mattoni pieni e malta di calce LC2_Corti

fb_	fhk	fvk0	fhmedio	τ0	fv0	μ	ϕ	fvk,lim	E	G	FC
120000			172500	9000	20000	0.577	0.767	6500	320000000	128000000	1.2

Verifiche a pressoflessione delle travi in muratura in combinazioni non sismiche

Sezione	γM	N	M	Mu	Comb.	c.s.	Verifica
ini.	3	590	166.05	799.08	SLU 77	4.81	Si
fin.	3	284	-147.29	799.08	SLU 77	5.43	Si
ini.	3	493	146.64	799.08	SLU 35	5.45	Si
fin.	3	219	-129.05	799.08	SLU 35	6.19	Si
ini.	3	616	149.92	799.08	SLU 69	5.33	Si
fin.	3	344	-127.9	799.08	SLU 69	6.25	Si
ini.	3	501	156.74	799.08	SLU 83	5.1	Si
fin.	3	217	-146	799.08	SLU 83	5.47	Si
ini.	3	539	141.29	799.08	SLU 58	5.66	Si
fin.	3	273	-130.68	799.08	SLU 58	6.12	Si
ini.	3	535	156.08	799.08	SLU 74	5.12	Si
fin.	3	255	-139.59	799.08	SLU 74	5.72	Si
ini.	3	562	147.55	799.08	SLU 56	5.42	Si
fin.	3	286	-132.58	799.08	SLU 56	6.03	Si
ini.	3	594	143.67	799.08	SLU 71	5.56	Si
fin.	3	331	-126	799.08	SLU 71	6.34	Si
ini.	3	446	146.77	799.08	SLU 81	5.44	Si
fin.	3	188	-138.29	799.08	SLU 81	5.78	Si
ini.	3	567	159.8	799.08	SLU 79	5	Si
fin.	3	271	-145.39	799.08	SLU 79	5.5	Si

Verifiche a taglio delle travi in muratura secondo §C8.7.1.3.1 in combinazioni non sismiche

Sezione	γM	N	M	V	Vt	Vp	Vt fess. diag.	Vt,lim	Comb.	c.s.	Verifica
ini.	3	507	140.02	-223			809	160	SLU 78	0.72	No
fin.	3	245	-135.49	-2529			809	245	SLU 78	0.1	No
ini.	3	616	149.92	-252			809	105	SLU 69	0.42	No
fin.	3	344	-127.9	-2471			809	217	SLU 69	0.09	No
ini.	3	501	156.74	-289			809	162	SLU 83	0.56	No
fin.	3	217	-146	-2622			809	253	SLU 83	0.1	No
ini.	3	562	147.55	-261			809	135	SLU 56	0.52	No
fin.	3	286	-132.58	-2469			809	234	SLU 56	0.09	No
ini.	3	588	131.42	-205			809	122	SLU 48	0.59	No
fin.	3	346	-113.19	-2205			809	216	SLU 48	0.1	No
ini.	3	535	156.08	-279			809	148	SLU 74	0.53	No
fin.	3	255	-139.59	-2573			809	243	SLU 74	0.09	No
ini.	3	567	159.8	-294			809	133	SLU 79	0.45	No
fin.	3	271	-145.39	-2671			809	238	SLU 79	0.09	No
ini.	3	561	139.95	-222			809	136	SLU 66	0.61	No
fin.	3	315	-120.2	-2309			809	226	SLU 66	0.1	No
ini.	3	590	166.05	-308			809	121	SLU 77	0.39	No
fin.	3	284	-147.29	-2735			809	235	SLU 77	0.09	No
ini.	3	594	143.67	-238			809	119	SLU 71	0.5	No
fin.	3	331	-126	-2407			809	221	SLU 71	0.09	No

Verifiche a pressoflessione delle travi in muratura in combinazioni sismiche

Sezione	γM	N	M	Mu	Comb.	c.s.	Verifica
ini.	2	-3006	-509.91	1198.62	SLV 16	2.35	Si
fin.	2	-3121	-287.21	1198.62	SLV 16	4.17	Si
ini.	2	-3006	-509.91	1198.62	SLV 15	2.35	Si
fin.	2	-3121	-287.21	1198.62	SLV 15	4.17	Si
ini.	2	1427	578.47	1198.62	SLV 7	2.07	Si
fin.	2	422	-205.63	1198.62	SLV 7	5.83	Si
ini.	2	1427	578.47	1198.62	SLV 8	2.07	Si
fin.	2	422	-205.63	1198.62	SLV 8	5.83	Si
ini.	2	-3039	-675.63	1198.62	SLV 13	1.77	Si
fin.	2	-2699	-189.12	1198.62	SLV 13	6.34	Si
ini.	2	3755	867.07	1198.62	SLV 4	1.38	Si
fin.	2	3087	14.37	1198.62	SLV 4	83.43	Si
ini.	2	3722	701.35	1198.62	SLV 2	1.71	Si
fin.	2	3509	112.46	1198.62	SLV 2	10.66	Si
ini.	2	3722	701.35	1198.62	SLV 1	1.71	Si
fin.	2	3509	112.46	1198.62	SLV 1	10.66	Si
ini.	2	3755	867.07	1198.62	SLV 3	1.38	Si
fin.	2	3087	14.37	1198.62	SLV 3	83.43	Si
ini.	2	-3039	-675.63	1198.62	SLV 14	1.77	Si
fin.	2	-2699	-189.12	1198.62	SLV 14	6.34	Si

Verifiche a taglio delle travi in muratura secondo §C8.7.1.3.1 in combinazioni sismiche

Sezione	γM	N	M	V	Vt	Vp	Vt fess. diag.	Vt,lim	Comb.	c.s.	Verifica
ini.	2	3722	701.35	-1197			1213	0	SLV 2	0	No
fin.	2	3509	112.46	-1895			1213	0	SLV 2	0	No
ini.	2	3755	867.07	-1664			1213	0	SLV 4	0	No
fin.	2	3087	14.37	-2905			1213	0	SLV 4	0	No
ini.	2	1427	578.47	-1308			1213	0	SLV 7	0	No
fin.	2	422	-205.63	-3537			1213	353	SLV 7	0.1	No
ini.	2	3722	701.35	-1197			1213	0	SLV 1	0	No
fin.	2	3509	112.46	-1895			1213	0	SLV 1	0	No
ini.	2	1427	578.47	-1308			1213	0	SLV 8	0	No
fin.	2	422	-205.63	-3537			1213	353	SLV 8	0.1	No
ini.	2	1317	26.06	250			1213	0	SLV 5	0	No
fin.	2	1829	121.35	-171			1213	0	SLV 5	0	No
ini.	2	-601	165.38	-536			1454	572	SLV 12	1.07	Si
fin.	2	-1440	-296.1	-3069			1789	703	SLV 12	0.23	No

Sezione	γM	N	M	V	Vt	Vp	Vt fess. diag.	Vt,lim	Comb.	c.s.	Verifica
ini.	2	1317	26.06	250			1213	0	SLV 6	0	No
fin.	2	1829	121.35	-171			1213	0	SLV 6	0	No
ini.	2	3755	867.07	-1664			1213	0	SLV 3	0	No
fin.	2	3087	14.37	-2905			1213	0	SLV 3	0	No
ini.	2	-601	165.38	-536			1454	572	SLV 11	1.07	Si
fin.	2	-1440	-296.1	-3069			1789	703	SLV 11	0.23	No

Tabella dei coefficienti di sicurezza minimi

Stato limite	Coeff.s.	Comb.	Verifica
PF_SLV	1.382	SLV 3	Si
V_SLV	0	SLV 1	No
PF_SLU	4.812	SLU 77	Si
V_SLU	0.086	SLU 77	No

Trave di accoppiamento 136

Verifiche condotte secondo D.M. 17-01-18 (N.T.C.)

Dati geometrici

X ini.	Y ini.	Z ini.inf.	Z ini.sup.	H ini.	X fin.	Y fin.	Z fin.inf.	Z fin.sup	H fin.	Luce	Spessore	R. Trazione
-2.223	-3.248	7.9	8.8	0.9	-3.223	-3.248	7.9	8.8	0.9	1	0.28	30000

Caratteristiche del materiale

(Circolare 7 21-01-19 C8.5.I) Muratura in mattoni pieni e malta di calce LC2_Corti

fb_	fhk	fvk0	fhmedio	τ0	fv0	μ	ϕ	fvk,lim	E	G	FC
120000			172500	9000	20000	0.577	0.767	6500	320000000	128000000	1.2

Verifiche a pressoflessione delle travi in muratura in combinazioni non sismiche

Sezione	γM	N	M	Mu	Comb.	c.s.	Verifica
ini.	3	-86	195.91	1150.68	SLU 50	5.87	Si
fin.	3	645	-31.18	1150.68	SLU 50	36.9	Si
ini.	3	-109	198.28	1150.68	SLU 43	5.8	Si
fin.	3	626	-43.36	1150.68	SLU 43	26.54	Si
ini.	3	125	195.01	1150.68	SLU 51	5.9	Si
fin.	3	887	-42.03	1150.68	SLU 51	27.38	Si
ini.	3	133	194.32	1150.68	SLU 46	5.92	Si
fin.	3	895	-46.12	1150.68	SLU 46	24.95	Si
ini.	3	-71	190.92	1150.68	SLU 64	6.03	Si
fin.	3	677	-32.94	1150.68	SLU 64	34.94	Si
ini.	3	242	196.79	1150.68	SLU 44	5.85	Si
fin.	3	1028	-61.44	1150.68	SLU 44	18.73	Si
ini.	3	-77	195.21	1150.68	SLU 45	5.89	Si
fin.	3	654	-35.27	1150.68	SLU 45	32.62	Si
ini.	3	145	193.13	1150.68	SLU 49	5.96	Si
fin.	3	904	-40.03	1150.68	SLU 49	28.75	Si
ini.	3	253	195.6	1150.68	SLU 47	5.88	Si
fin.	3	1038	-55.35	1150.68	SLU 47	20.79	Si
ini.	3	-66	194.03	1150.68	SLU 48	5.93	Si
fin.	3	663	-29.18	1150.68	SLU 48	39.43	Si

Verifiche a taglio delle travi in muratura secondo §C8.7.1.3.1 in combinazioni non sismiche

Sezione	γM	N	M	V	Vt	Vp	Vt fess. diag.	Vt,lim	Comb.	c.s.	Verifica
ini.	3	256	127.06	-769			873	274	SLU 36	0.36	No
fin.	3	870	-6.18	393			873	0	SLU 36	0	No
ini.	3	133	194.32	-975			873	302	SLU 46	0.31	No
fin.	3	895	-46.12	290			873	0	SLU 46	0	No
ini.	3	365	129.53	-763			873	247	SLU 34	0.32	No
fin.	3	1004	-21.5	319			873	0	SLU 34	0	No
ini.	3	229	126.59	-708			873	280	SLU 40	0.4	No
fin.	3	853	-15.78	275			873	0	SLU 40	0	No
ini.	3	125	195.01	-986			873	303	SLU 51	0.31	No
fin.	3	887	-42.03	314			873	0	SLU 51	0	No
ini.	3	145	193.13	-996			873	299	SLU 49	0.3	No
fin.	3	904	-40.03	342			873	0	SLU 49	0	No
ini.	3	241	125.41	-729			873	278	SLU 42	0.38	No
fin.	3	862	-9.69	327			873	0	SLU 42	0	No
ini.	3	242	196.79	-969			873	277	SLU 44	0.29	No
fin.	3	1028	-61.44	215			873	0	SLU 44	0	No
ini.	3	236	128.94	-759			873	279	SLU 38	0.37	No
fin.	3	852	-8.18	366			873	0	SLU 38	0	No
ini.	3	253	195.6	-990			873	275	SLU 47	0.28	No
fin.	3	1038	-55.35	267			873	0	SLU 47	0	No

Verifiche a pressoflessione delle travi in muratura in combinazioni sismiche

Sezione	γM	N	M	Mu	Comb.	c.s.	Verifica
ini.	2	-1757	1107.27	1726.01	SLV 3	1.56	Si
fin.	2	1994	-714.96	1726.01	SLV 3	2.41	Si
ini.	2	1654	-816.6	1726.01	SLV 13	2.11	Si
fin.	2	-948	665.8	1726.01	SLV 13	2.59	Si
ini.	2	1654	-816.6	1726.01	SLV 14	2.11	Si
fin.	2	-948	665.8	1726.01	SLV 14	2.59	Si
ini.	2	-1757	1107.27	1726.01	SLV 4	1.56	Si
fin.	2	1994	-714.96	1726.01	SLV 4	2.41	Si
ini.	2	-1276	1172.66	1726.01	SLV 2	1.47	Si
fin.	2	2992	-854.47	1726.01	SLV 2	2.02	Si
ini.	2	311	552.71	1726.01	SLV 5	3.12	Si
fin.	2	2778	-485.15	1726.01	SLV 5	3.56	Si

Sezione	γM	N	M	Mu	Comb.	c.s.	Verifica
ini.	2	1172	-881.99	1726.01	SLV 16	1.96	Si
fin.	2	-1946	805.32	1726.01	SLV 16	2.14	Si
ini.	2	1172	-881.99	1726.01	SLV 15	1.96	Si
fin.	2	-1946	805.32	1726.01	SLV 15	2.14	Si
ini.	2	311	552.71	1726.01	SLV 6	3.12	Si
fin.	2	2778	-485.15	1726.01	SLV 6	3.56	Si
ini.	2	-1276	1172.66	1726.01	SLV 1	1.47	Si
fin.	2	2992	-854.47	1726.01	SLV 1	2.02	Si

Verifiche a taglio delle travi in muratura secondo §C8.7.1.3.1 in combinazioni sismiche

Sezione	γM	N	M	V	Vt	Vp	Vt fess. diag.	Vt,lim	Comb.	c.s.	Verifica
ini.	2	-1276	1172.66	-4182			1769	699	SLV 2	0.17	No
fin.	2	2992	-854.47	-3112			1310	0	SLV 2	0	No
ini.	2	-1757	1107.27	-3734			1943	763	SLV 3	0.2	No
fin.	2	1994	-714.96	-3466			1310	0	SLV 3	0	No
ini.	2	1190	-44.07	-461			1310	116	SLV 9	0.25	No
fin.	2	1596	-29.07	1828			1310	0	SLV 9	0	No
ini.	2	1654	-816.6	2347			1310	0	SLV 14	0	No
fin.	2	-948	665.8	3852			1651	653	SLV 14	0.17	No
ini.	2	-1757	1107.27	-3734			1943	763	SLV 4	0.2	No
fin.	2	1994	-714.96	-3466			1310	0	SLV 4	0	No
ini.	2	-1276	1172.66	-4182			1769	699	SLV 1	0.17	No
fin.	2	2992	-854.47	-3112			1310	0	SLV 1	0	No
ini.	2	1190	-44.07	-461			1310	116	SLV 10	0.25	No
fin.	2	1596	-29.07	1828			1310	0	SLV 10	0	No
ini.	2	311	552.71	-2419			1310	428	SLV 5	0.18	No
fin.	2	2778	-485.15	-262			1310	0	SLV 5	0	No
ini.	2	311	552.71	-2419			1310	428	SLV 6	0.18	No
fin.	2	2778	-485.15	-262			1310	0	SLV 6	0	No
ini.	2	1654	-816.6	2347			1310	0	SLV 13	0	No
fin.	2	-948	665.8	3852			1651	653	SLV 13	0.17	No

Tabella dei coefficienti di sicurezza minimi

Stato limite	Coeff.s.	Comb.	Verifica
PF_SLV	1.472	SLV 1	Si
V_SLV	0	SLV 1	No
PF_SLU	5.803	SLU 43	Si
V_SLU	0	SLU 2	No

Trave di accoppiamento 137

Verifiche condotte secondo D.M. 17-01-18 (N.T.C.)

Dati geometrici

X ini.	Y ini.	Z ini.inf.	Z ini.sup.	H ini.	X fin.	Y fin.	Z fin.inf.	Z fin.sup	H fin.	Luce	Spessore	R. Trazione
-2.223	-3.248	10.7	11.45	0.75	-3.223	-3.248	10.7	11.45	0.75	1	0.28	30000

Caratteristiche del materiale

(Circolare 7 21-01-19 C8.5.I) Muratura in mattoni pieni e malta di calce LC2_Corti

fb_	fhk	fvk0	fhmedio	τ0	fv0	μ	ϕ	fvk,lim	E	G	FC
120000			172500	9000	20000	0.577	0.767	6500	320000000	128000000	1.2

Verifiche a pressoflessione delle travi in muratura in combinazioni non sismiche

Sezione	γM	N	M	Mu	Comb.	c.s.	Verifica
ini.	3	361	-18.06	799.08	SLU 53	44.25	Si
fin.	3	-67	-145.65	799.08	SLU 53	5.49	Si
ini.	3	321	-25.64	799.08	SLU 62	31.17	Si
fin.	3	-92	-147.17	799.08	SLU 62	5.43	Si
ini.	3	319	-15.76	799.08	SLU 60	50.7	Si
fin.	3	-121	-148.8	799.08	SLU 60	5.37	Si
ini.	3	313	-48.35	799.08	SLU 79	16.53	Si
fin.	3	-55	-147.61	799.08	SLU 79	5.41	Si
ini.	3	290	-49.24	799.08	SLU 83	16.23	Si
fin.	3	-90	-150.87	799.08	SLU 83	5.3	Si
ini.	3	332	-51.54	799.08	SLU 77	15.5	Si
fin.	3	-35	-147.72	799.08	SLU 77	5.41	Si
ini.	3	379	-16.54	799.08	SLU 66	48.31	Si
fin.	3	-50	-145.55	799.08	SLU 66	5.49	Si
ini.	3	359	-3.48	799.08	SLU 64	229.95	Si
fin.	3	-98	-147.08	799.08	SLU 64	5.43	Si
ini.	3	330	-41.66	799.08	SLU 74	19.18	Si
fin.	3	-64	-149.35	799.08	SLU 74	5.35	Si
ini.	3	289	-39.37	799.08	SLU 81	20.3	Si
fin.	3	-119	-152.51	799.08	SLU 81	5.24	Si

Verifiche a taglio delle travi in muratura secondo §C8.7.1.3.1 in combinazioni non sismiche

Sezione	γM	N	M	V	Vt	Vp	Vt fess. diag.	Vt,lim	Comb.	c.s.	Verifica
ini.	3	454	-24.46	816			607	135	SLU 70	0.17	No
fin.	3	57	-136.24	-1657			607	219	SLU 70	0.13	No
ini.	3	465	-11.62	789			607	132	SLU 55	0.17	No
fin.	3	44	-132.74	-1663			607	221	SLU 55	0.13	No
ini.	3	386	-46.4	934			607	153	SLU 80	0.16	No
fin.	3	23	-139.93	-1749			607	224	SLU 80	0.13	No
ini.	3	364	-47.29	949			607	158	SLU 84	0.17	No
fin.	3	-12	-143.19	-1785			610	230	SLU 84	0.13	No
ini.	3	434	-35.22	925			607	141	SLU 76	0.15	No
fin.	3	46	-136.44	-1778			607	221	SLU 76	0.12	No

Sezione	γM	N	M	V	Vt	Vp	Vt fess. diag.	Vt,lim	Comb.	c.s.	Verifica
ini.	3	405	-49.59	958			607	148	SLU 78	0.15	No
fin.	3	43	-140.03	-1775			607	221	SLU 78	0.12	No
ini.	3	363	-37.41	903			607	158	SLU 82	0.18	No
fin.	3	-41	-144.82	-1771			619	235	SLU 82	0.13	No
ini.	3	404	-39.71	912			607	148	SLU 75	0.16	No
fin.	3	14	-141.67	-1761			607	226	SLU 75	0.13	No
ini.	3	483	-10.1	782			607	127	SLU 68	0.16	No
fin.	3	60	-132.64	-1659			607	218	SLU 68	0.13	No
ini.	3	433	-25.34	879			607	141	SLU 73	0.16	No
fin.	3	17	-138.07	-1763			607	225	SLU 73	0.13	No

Verifiche a pressoflessione delle travi in muratura in combinazioni sismiche

Sezione	γM	N	M	Mu	Comb.	c.s.	Verifica
ini.	2	1654	686.95	1198.62	SLV 1	1.74	Si
fin.	2	-1642	-748.4	1198.62	SLV 1	1.6	Si
ini.	2	-356	-548.46	1198.62	SLV 13	2.19	Si
fin.	2	1407	382.78	1198.62	SLV 13	3.13	Si
ini.	2	893	539.13	1198.62	SLV 3	2.22	Si
fin.	2	-1568	-609.6	1198.62	SLV 3	1.97	Si
ini.	2	-1116	-696.28	1198.62	SLV 15	1.72	Si
fin.	2	1481	521.58	1198.62	SLV 15	2.3	Si
ini.	2	893	539.13	1198.62	SLV 4	2.22	Si
fin.	2	-1568	-609.6	1198.62	SLV 4	1.97	Si
ini.	2	1838	427.02	1198.62	SLV 5	2.81	Si
fin.	2	-661	-514.42	1198.62	SLV 5	2.33	Si
ini.	2	1838	427.02	1198.62	SLV 6	2.81	Si
fin.	2	-661	-514.42	1198.62	SLV 6	2.33	Si
ini.	2	-356	-548.46	1198.62	SLV 14	2.19	Si
fin.	2	1407	382.78	1198.62	SLV 14	3.13	Si
ini.	2	-1116	-696.28	1198.62	SLV 16	1.72	Si
fin.	2	1481	521.58	1198.62	SLV 16	2.3	Si
ini.	2	1654	686.95	1198.62	SLV 2	1.74	Si
fin.	2	-1642	-748.4	1198.62	SLV 2	1.6	Si

Verifiche a taglio delle travi in muratura secondo §C8.7.1.3.1 in combinazioni sismiche

Sezione	γM	N	M	V	Vt	Vp	Vt fess. diag.	Vt,lim	Comb.	c.s.	Verifica
ini.	2	1235	56.39	1204			910	0	SLV 9	0	No
fin.	2	253	-175.06	-1088			910	298	SLV 9	0.27	No
ini.	2	1654	686.95	-1407			910	0	SLV 2	0	No
fin.	2	-1642	-748.4	-3783			1402	548	SLV 2	0.14	No
ini.	2	1838	427.02	36			910	0	SLV 6	0	No
fin.	2	-661	-514.42	-2532			1108	437	SLV 6	0.17	No
ini.	2	1235	56.39	1204			910	0	SLV 10	0	No
fin.	2	253	-175.06	-1088			910	298	SLV 10	0.27	No
ini.	2	1654	686.95	-1407			910	0	SLV 1	0	No
fin.	2	-1642	-748.4	-3783			1402	548	SLV 1	0.14	No
ini.	2	-356	-548.46	2488			1017	396	SLV 14	0.16	No
fin.	2	1407	382.78	1030			910	0	SLV 14	0	No
ini.	2	1838	427.02	36			910	0	SLV 5	0	No
fin.	2	-661	-514.42	-2532			1108	437	SLV 5	0.17	No
ini.	2	-1116	-696.28	2420			1245	492	SLV 16	0.2	No
fin.	2	1481	521.58	1402			910	0	SLV 16	0	No
ini.	2	-1116	-696.28	2420			1245	492	SLV 15	0.2	No
fin.	2	1481	521.58	1402			910	0	SLV 15	0	No
ini.	2	-356	-548.46	2488			1017	396	SLV 13	0.16	No
fin.	2	1407	382.78	1030			910	0	SLV 13	0	No

Tabella dei coefficienti di sicurezza minimi

Stato limite	Coeff.s.	Comb.	Verifica
PF_SLV	1.602	SLV 1	Si
V_SLV	0	SLV 1	No
PF_SLU	5.24	SLU 81	Si
V_SLU	0.124	SLU 76	No

Trave di accoppiamento 138

Verifiche condotte secondo D.M. 17-01-18 (N.T.C.)

Dati geometrici

X ini.	Y ini.	Z ini.inf.	Z ini.sup.	H ini.	X fin.	Y fin.	Z fin.inf.	Z fin.sup	H fin.	Luce	Spessore	R. Trazione
-1.889	5.83	7.9	8.8	0.9	-2.889	5.83	7.9	8.8	0.9	1	0.28	30000

Caratteristiche del materiale

(Circolare 7 21-01-19 C8.5.I) Muratura in mattoni pieni e malta di calce LC2_Corti

fb_	fhk	fvk0	fhmedio	τ0	fv0	μ	ϕ	fvk,lim	E	G	FC
120000			172500	9000	20000	0.577	0.767	6500	320000000	128000000	1.2

Verifiche a pressoflessione delle travi in muratura in combinazioni non sismiche

Sezione	γM	N	M	Mu	Comb.	c.s.	Verifica
ini.	3	720	-341.96	1150.68	SLU 80	3.36	Si
fin.	3	-706	517.37	1150.68	SLU 80	2.22	Si
ini.	3	686	-328.3	1150.68	SLU 83	3.5	Si
fin.	3	-673	499.16	1150.68	SLU 83	2.31	Si
ini.	3	663	-312.92	1150.68	SLU 75	3.68	Si
fin.	3	-647	483.83	1150.68	SLU 75	2.38	Si
ini.	3	691	-331.27	1150.68	SLU 84	3.47	Si
fin.	3	-678	501.97	1150.68	SLU 84	2.29	Si

Sezione	γM	N	M	Mu	Comb.	c.s.	Verifica
ini.	3	658	-309.95	1150.68	SLU 74	3.71	Si
fin.	3	-641	481.03	1150.68	SLU 74	2.39	Si
ini.	3	643	-299.78	1150.68	SLU 70	3.84	Si
fin.	3	-644	474.07	1150.68	SLU 70	2.43	Si
ini.	3	728	-341.48	1150.68	SLU 78	3.37	Si
fin.	3	-697	518.12	1150.68	SLU 78	2.22	Si
ini.	3	658	-315.38	1150.68	SLU 76	3.65	Si
fin.	3	-659	484.96	1150.68	SLU 76	2.37	Si
ini.	3	723	-338.51	1150.68	SLU 77	3.4	Si
fin.	3	-691	515.31	1150.68	SLU 77	2.23	Si
ini.	3	715	-338.99	1150.68	SLU 79	3.39	Si
fin.	3	-701	514.57	1150.68	SLU 79	2.24	Si

Verifiche a taglio delle travi in muratura secondo §C8.7.1.3.1 in combinazioni non sismiche

Sezione	γM	N	M	V	Vt	Vp	Vt fess. diag.	Vt,lim	Comb.	c.s.	Verifica
ini.	3	658	-315.38	821			873	153	SLU 76	0.19	No
fin.	3	-659	484.96	2174			1111	439	SLU 76	0.2	No
ini.	3	720	-341.96	884			873	124	SLU 80	0.14	No
fin.	3	-706	517.37	2335			1128	446	SLU 80	0.19	No
ini.	3	686	-328.3	873			873	141	SLU 83	0.16	No
fin.	3	-673	499.16	2218			1116	441	SLU 83	0.2	No
ini.	3	691	-331.27	883			873	138	SLU 84	0.16	No
fin.	3	-678	501.97	2229			1118	442	SLU 84	0.2	No
ini.	3	653	-309.33	825			873	155	SLU 38	0.19	No
fin.	3	-612	450.48	2011			1094	432	SLU 38	0.21	No
ini.	3	663	-312.92	799			873	151	SLU 75	0.19	No
fin.	3	-647	483.83	2185			1106	437	SLU 75	0.2	No
ini.	3	661	-308.85	810			873	152	SLU 36	0.19	No
fin.	3	-603	451.22	2029			1091	431	SLU 36	0.21	No
ini.	3	723	-338.51	859			873	123	SLU 77	0.14	No
fin.	3	-691	515.31	2342			1122	444	SLU 77	0.19	No
ini.	3	728	-341.48	868			873	120	SLU 78	0.14	No
fin.	3	-697	518.12	2353			1124	445	SLU 78	0.19	No
ini.	3	715	-338.99	874			873	127	SLU 79	0.15	No
fin.	3	-701	514.57	2323			1126	445	SLU 79	0.19	No

Verifiche a pressoflessione delle travi in muratura in combinazioni sismiche

Sezione	γM	N	M	Mu	Comb.	c.s.	Verifica
ini.	2	2301	-914.55	1726.01	SLV 12	1.89	Si
fin.	2	-1800	1062.31	1726.01	SLV 12	1.62	Si
ini.	2	1333	-432.44	1726.01	SLV 8	3.99	Si
fin.	2	-776	586.78	1726.01	SLV 8	2.94	Si
ini.	2	1333	-432.44	1726.01	SLV 7	3.99	Si
fin.	2	-776	586.78	1726.01	SLV 7	2.94	Si
ini.	2	-1656	763.08	1726.01	SLV 1	2.26	Si
fin.	2	1546	-636.54	1726.01	SLV 1	2.71	Si
ini.	2	1573	-843.97	1726.01	SLV 13	2.05	Si
fin.	2	-1869	948.56	1726.01	SLV 13	1.82	Si
ini.	2	2431	-1136.14	1726.01	SLV 16	1.52	Si
fin.	2	-2389	1257.11	1726.01	SLV 16	1.37	Si
ini.	2	2431	-1136.14	1726.01	SLV 15	1.52	Si
fin.	2	-2389	1257.11	1726.01	SLV 15	1.37	Si
ini.	2	1573	-843.97	1726.01	SLV 14	2.05	Si
fin.	2	-1869	948.56	1726.01	SLV 14	1.82	Si
ini.	2	2301	-914.55	1726.01	SLV 11	1.89	Si
fin.	2	-1800	1062.31	1726.01	SLV 11	1.62	Si
ini.	2	-1656	763.08	1726.01	SLV 2	2.26	Si
fin.	2	1546	-636.54	1726.01	SLV 2	2.71	Si

Verifiche a taglio delle travi in muratura secondo §C8.7.1.3.1 in combinazioni sismiche

Sezione	γM	N	M	V	Vt	Vp	Vt fess. diag.	Vt,lim	Comb.	c.s.	Verifica
ini.	2	2301	-914.55	1128			1310	0	SLV 11	0	No
fin.	2	-1800	1062.31	4066			1958	768	SLV 11	0.19	No
ini.	2	1573	-843.97	3585			1310	0	SLV 13	0	No
fin.	2	-1869	948.56	4152			1983	777	SLV 13	0.19	No
ini.	2	1333	-432.44	-704			1310	0	SLV 8	0	No
fin.	2	-776	586.78	2120			1589	627	SLV 8	0.3	No
ini.	2	2301	-914.55	1128			1310	0	SLV 12	0	No
fin.	2	-1800	1062.31	4066			1958	768	SLV 12	0.19	No
ini.	2	1573	-843.97	3585			1310	0	SLV 14	0	No
fin.	2	-1869	948.56	4152			1983	777	SLV 14	0.19	No
ini.	2	-1656	763.08	-2524			1906	750	SLV 1	0.3	No
fin.	2	1546	-636.54	-2335			1310	0	SLV 1	0	No
ini.	2	1333	-432.44	-704			1310	0	SLV 7	0	No
fin.	2	-776	586.78	2120			1589	627	SLV 7	0.3	No
ini.	2	-1656	763.08	-2524			1906	750	SLV 2	0.3	No
fin.	2	1546	-636.54	-2335			1310	0	SLV 2	0	No
ini.	2	2431	-1136.14	3438			1310	0	SLV 15	0	No
fin.	2	-2389	1257.11	5160			2170	839	SLV 15	0.16	No
ini.	2	2431	-1136.14	3438			1310	0	SLV 16	0	No
fin.	2	-2389	1257.11	5160			2170	839	SLV 16	0.16	No

Tabella dei coefficienti di sicurezza minimi

Stato limite	Coeff.s.	Comb.	Verifica
PF_SLV	1.373	SLV 15	Si
V_SLV	0	SLV 1	No
PF_SLU	2.221	SLU 78	Si
V_SLU	0.138	SLU 78	No

Trave di accoppiamento 139

Verifiche condotte secondo D.M. 17-01-18 (N.T.C.)

Dati geometrici

X ini.	Y ini.	Z ini.inf.	Z ini.sup.	H ini.	X fin.	Y fin.	Z fin.inf.	Z fin.sup	H fin.	Luce	Spessore	R. Trazione
-1.889	5.83	10.7	11.45	0.75	-2.889	5.83	10.7	11.45	0.75	1	0.28	30000

Caratteristiche del materiale

(Circolare 7 21-01-19 C8.5.I) Muratura in mattoni pieni e malta di calce LC2_Corti

fb_	fhk	fvk0	fhmedio	τ0	fv0	μ	ϕ	fvk,lim	E	G	FC
120000			172500	9000	20000	0.577	0.767	6500	320000000	128000000	1.2

Verifiche a pressoflessione delle travi in muratura in combinazioni non sismiche

Sezione	γM	N	M	Mu	Comb.	c.s.	Verifica
ini.	3	-958	-502.2	799.08	SLU 79	1.59	Si
fin.	3	771	253.13	799.08	SLU 79	3.16	Si
ini.	3	-880	-475.07	799.08	SLU 75	1.68	Si
fin.	3	739	232.59	799.08	SLU 75	3.44	Si
ini.	3	-902	-473.93	799.08	SLU 76	1.69	Si
fin.	3	723	235.43	799.08	SLU 76	3.39	Si
ini.	3	-957	-493.01	799.08	SLU 83	1.62	Si
fin.	3	720	240.58	799.08	SLU 83	3.32	Si
ini.	3	-961	-504.6	799.08	SLU 80	1.58	Si
fin.	3	782	255.87	799.08	SLU 80	3.12	Si
ini.	3	-900	-463.14	799.08	SLU 82	1.73	Si
fin.	3	664	221.05	799.08	SLU 82	3.62	Si
ini.	3	-960	-495.42	799.08	SLU 84	1.61	Si
fin.	3	731	243.32	799.08	SLU 84	3.28	Si
ini.	3	-940	-507.35	799.08	SLU 78	1.58	Si
fin.	3	806	254.86	799.08	SLU 78	3.14	Si
ini.	3	-938	-504.94	799.08	SLU 77	1.58	Si
fin.	3	795	252.12	799.08	SLU 77	3.17	Si
ini.	3	-878	-472.67	799.08	SLU 74	1.69	Si
fin.	3	728	229.85	799.08	SLU 74	3.48	Si

Verifiche a taglio delle travi in muratura secondo §C8.7.1.3.1 in combinazioni non sismiche

Sezione	γM	N	M	V	Vt	Vp	Vt fess. diag.	Vt,lim	Comb.	c.s.	Verifica
ini.	3	-846	-448.05	2464			860	339	SLU 36	0.14	No
fin.	3	700	226	-31			607	0	SLU 36	0	No
ini.	3	-799	-451.06	2542			846	334	SLU 69	0.13	No
fin.	3	758	229.43	-70			607	0	SLU 69	0	No
ini.	3	-960	-495.42	2772			894	351	SLU 84	0.13	No
fin.	3	731	243.32	-96			607	0	SLU 84	0	No
ini.	3	-822	-443.04	2498			853	337	SLU 58	0.13	No
fin.	3	705	224.75	-70			607	0	SLU 58	0	No
ini.	3	-957	-493.01	2764			894	351	SLU 83	0.13	No
fin.	3	720	240.58	-109			607	0	SLU 83	0	No
ini.	3	-666	-394.31	2251			806	319	SLU 49	0.14	No
fin.	3	703	203.79	-67			607	0	SLU 49	0	No
ini.	3	-802	-445.79	2520			847	334	SLU 56	0.13	No
fin.	3	729	223.74	-90			607	0	SLU 56	0	No
ini.	3	-825	-445.44	2507			854	337	SLU 59	0.13	No
fin.	3	716	227.49	-58			607	0	SLU 59	0	No
ini.	3	-802	-453.46	2550			847	334	SLU 70	0.13	No
fin.	3	769	232.17	-57			607	0	SLU 70	0	No
ini.	3	-804	-448.19	2528			848	335	SLU 57	0.13	No
fin.	3	740	226.48	-77			607	0	SLU 57	0	No

Verifiche a pressoflessione delle travi in muratura in combinazioni sismiche

Sezione	γM	N	M	Mu	Comb.	c.s.	Verifica
ini.	2	709	351.67	1198.62	SLV 1	3.41	Si
fin.	2	-871	-491.61	1198.62	SLV 1	2.44	Si
ini.	2	-1547	-857.3	1198.62	SLV 12	1.4	Si
fin.	2	1205	675.78	1198.62	SLV 12	1.77	Si
ini.	2	-1804	-946.85	1198.62	SLV 15	1.27	Si
fin.	2	1786	778.09	1198.62	SLV 15	1.54	Si
ini.	2	-1394	-706.23	1198.62	SLV 13	1.7	Si
fin.	2	1556	552.54	1198.62	SLV 13	2.17	Si
ini.	2	709	351.67	1198.62	SLV 2	3.41	Si
fin.	2	-871	-491.61	1198.62	SLV 2	2.44	Si
ini.	2	-916	-539.93	1198.62	SLV 7	2.22	Si
fin.	2	477	362.53	1198.62	SLV 7	3.31	Si
ini.	2	-1547	-857.3	1198.62	SLV 11	1.4	Si
fin.	2	1205	675.78	1198.62	SLV 11	1.77	Si
ini.	2	-1394	-706.23	1198.62	SLV 14	1.7	Si
fin.	2	1556	552.54	1198.62	SLV 14	2.17	Si
ini.	2	-1804	-946.85	1198.62	SLV 16	1.27	Si
fin.	2	1786	778.09	1198.62	SLV 16	1.54	Si
ini.	2	-916	-539.93	1198.62	SLV 8	2.22	Si
fin.	2	477	362.53	1198.62	SLV 8	3.31	Si

Verifiche a taglio delle travi in muratura secondo §C8.7.1.3.1 in combinazioni sismiche

Sezione	γM	N	M	V	Vt	Vp	Vt fess. diag.	Vt,lim	Comb.	c.s.	Verifica
ini.	2	299	111.05	267			910	290	SLV 3	1.09	Si
fin.	2	-641	-266.06	-2077			1102	434	SLV 3	0.21	No
ini.	2	-1547	-857.3	3797			1374	539	SLV 12	0.14	No
fin.	2	1205	675.78	53			910	0	SLV 12	0	No
ini.	2	-916	-539.93	2655			1185	469	SLV 8	0.18	No
fin.	2	477	362.53	-1056			910	253	SLV 8	0.24	No

Sezione	γM	N	M	V	Vt	Vp	Vt fess. diag.	Vt,lim	Comb.	c.s.	Verifica
ini.	2	-1804	-946.85	4073			1451	565	SLV 16	0.14	No
fin.	2	1786	778.09	1620			910	0	SLV 16	0	No
ini.	2	-1547	-857.3	3797			1374	539	SLV 11	0.14	No
fin.	2	1205	675.78	53			910	0	SLV 11	0	No
ini.	2	-1804	-946.85	4073			1451	565	SLV 15	0.14	No
fin.	2	1786	778.09	1620			910	0	SLV 15	0	No
ini.	2	299	111.05	267			910	290	SLV 4	1.09	Si
fin.	2	-641	-266.06	-2077			1102	434	SLV 4	0.21	No
ini.	2	-916	-539.93	2655			1185	469	SLV 7	0.18	No
fin.	2	477	362.53	-1056			910	253	SLV 7	0.24	No
ini.	2	-1394	-706.23	3167			1328	522	SLV 13	0.16	No
fin.	2	1556	552.54	1854			910	0	SLV 13	0	No
ini.	2	-1394	-706.23	3167			1328	522	SLV 14	0.16	No
fin.	2	1556	552.54	1854			910	0	SLV 14	0	No

Tabella dei coefficienti di sicurezza minimi

Stato limite	Coeff.s.	Comb.	Verifica
PF_SLV	1.266	SLV 15	Si
V_SLV	0	SLV 11	No
PF_SLU	1.575	SLU 78	Si
V_SLU	0	SLU 36	No

Trave di accoppiamento 140

Verifiche condotte secondo D.M. 17-01-18 (N.T.C.)

Dati geometrici

X ini.	Y ini.	Z ini.inf.	Z ini.sup.	H ini.	X fin.	Y fin.	Z fin.inf.	Z fin.sup	H fin.	Luce	Spessore	R. Trazione
-24.643	1.321	13.55	14.6	1.05	-24.643	2.121	13.55	14.6	1.05	0.8	0.28	30000

Caratteristiche del materiale

(Circolare 7 21-01-19 C8.5.I) Muratura in mattoni pieni e malta di calce LC2_Corti

fb_	fhk	fvk0	fhmedio	τ0	fv0	μ	ϕ	fvk,lim	E	G	FC
120000			172500	9000	20000	0.577	0.767	6500	320000000	128000000	1.2

Verifiche a pressoflessione delle travi in muratura in combinazioni non sismiche

Sezione	γM	N	M	Mu	Comb.	c.s.	Verifica
ini.	3	2839	253.72	1566.2	SLU 83	6.17	Si
fin.	3	2664	-76.12	1566.2	SLU 83	20.57	Si
ini.	3	2778	260.01	1566.2	SLU 36	6.02	Si
fin.	3	2605	-65.42	1566.2	SLU 36	23.94	Si
ini.	3	2619	257.05	1566.2	SLU 76	6.09	Si
fin.	3	2489	-35.31	1566.2	SLU 76	44.36	Si
ini.	3	2757	270.12	1566.2	SLU 84	5.8	Si
fin.	3	2579	-65.5	1566.2	SLU 84	23.91	Si
ini.	3	2657	264.02	1566.2	SLU 75	5.93	Si
fin.	3	2472	-65.97	1566.2	SLU 75	23.74	Si
ini.	3	3110	271.94	1566.2	SLU 78	5.76	Si
fin.	3	2971	-47.62	1566.2	SLU 78	32.89	Si
ini.	3	2305	262.21	1566.2	SLU 82	5.97	Si
fin.	3	2080	-83.85	1566.2	SLU 82	18.68	Si
ini.	3	3126	254.03	1566.2	SLU 80	6.17	Si
fin.	3	3045	-24.04	1566.2	SLU 80	65.15	Si
ini.	3	3192	255.54	1566.2	SLU 77	6.13	Si
fin.	3	3056	-58.24	1566.2	SLU 77	26.89	Si
ini.	3	2426	258.19	1566.2	SLU 42	6.07	Si
fin.	3	2213	-83.31	1566.2	SLU 42	18.8	Si

Verifiche a taglio delle travi in muratura secondo §C8.7.1.3.1 in combinazioni non sismiche

Sezione	γM	N	M	V	Vt	Vp	Vt fess. diag.	Vt,lim	Comb.	c.s.	Verifica
ini.	3	2343	210.78	-85			1132	0	SLU 54	0	No
fin.	3	2254	-21.82	-707			1132	0	SLU 54	0	No
ini.	3	2812	200.79	37			1132	0	SLU 59	0	No
fin.	3	2826	20.1	-575			1132	0	SLU 59	0	No
ini.	3	2305	203.81	11			1132	0	SLU 55	0	No
fin.	3	2271	8.83	-614			1132	0	SLU 55	0	No
ini.	3	2894	184.39	20			1132	0	SLU 58	0	No
fin.	3	2911	9.48	-580			1132	0	SLU 58	0	No
ini.	3	1464	100.61	72			1132	0	SLU 1	0	No
fin.	3	1471	8.9	-396			1132	0	SLU 1	0	No
ini.	3	2796	218.7	-47			1132	0	SLU 57	0	No
fin.	3	2753	-3.47	-665			1132	0	SLU 57	0	No
ini.	3	1991	208.97	-128			1132	0	SLU 61	0	No
fin.	3	1862	-39.71	-751			1132	0	SLU 61	0	No
ini.	3	2878	202.3	-65			1132	0	SLU 56	0	No
fin.	3	2838	-14.1	-670			1132	0	SLU 56	0	No
ini.	3	2426	194.38	-102			1132	0	SLU 53	0	No
fin.	3	2339	-32.45	-712			1132	0	SLU 53	0	No
ini.	3	2073	192.56	-146			1132	0	SLU 60	0	No
fin.	3	1947	-50.33	-756			1132	0	SLU 60	0	No

Verifiche a pressoflessione delle travi in muratura in combinazioni sismiche

Sezione	γM	N	M	Mu	Comb.	c.s.	Verifica
ini.	2	2294	636.73	2349.3	SLV 7	3.69	Si
fin.	2	1359	-518.4	2349.3	SLV 7	4.53	Si
ini.	2	1300	727.24	2349.3	SLV 12	3.23	Si
fin.	2	1022	-569.22	2349.3	SLV 12	4.13	Si

Sezione	γM	N	M	Mu	Comb.	c.s.	Verifica
ini.	2	2294	636.73	2349.3	SLV 8	3.69	Si
fin.	2	1359	-518.4	2349.3	SLV 8	4.53	Si
ini.	2	7	447.73	2349.3	SLV 16	5.25	Si
fin.	2	884	-261.22	2349.3	SLV 16	8.99	Si
ini.	2	7	447.73	2349.3	SLV 15	5.25	Si
fin.	2	884	-261.22	2349.3	SLV 15	8.99	Si
ini.	2	1300	727.24	2349.3	SLV 11	3.23	Si
fin.	2	1022	-569.22	2349.3	SLV 11	4.13	Si
ini.	2	924	-373.07	2349.3	SLV 10	6.3	Si
fin.	2	1752	480.15	2349.3	SLV 10	4.89	Si
ini.	2	1919	-463.59	2349.3	SLV 5	5.07	Si
fin.	2	2089	530.97	2349.3	SLV 5	4.42	Si
ini.	2	924	-373.07	2349.3	SLV 9	6.3	Si
fin.	2	1752	480.15	2349.3	SLV 9	4.89	Si
ini.	2	1919	-463.59	2349.3	SLV 6	5.07	Si
fin.	2	2089	530.97	2349.3	SLV 6	4.42	Si

Verifiche a taglio delle travi in muratura secondo §C8.7.1.3.1 in combinazioni sismiche

Sezione	γM	N	M	V	Vt	Vp	Vt fess. diag.	Vt,lim	Comb.	c.s.	Verifica
ini.	2	3211	-184.08	604			1698	0	SLV 1	0	No
fin.	2	2226	222.98	555			1698	0	SLV 1	0	No
ini.	2	3211	-184.08	604			1698	0	SLV 2	0	No
fin.	2	2226	222.98	555			1698	0	SLV 2	0	No
ini.	2	924	-373.07	864			1698	390	SLV 9	0.45	No
fin.	2	1752	480.15	1182			1698	0	SLV 9	0	No
ini.	2	3324	146.02	1			1698	0	SLV 4	0	No
fin.	2	2008	-91.83	-552			1698	0	SLV 4	0	No
ini.	2	2294	636.73	-942			1698	0	SLV 8	0	No
fin.	2	1359	-518.4	-2202			1698	176	SLV 8	0.08	No
ini.	2	2294	636.73	-942			1698	0	SLV 7	0	No
fin.	2	1359	-518.4	-2202			1698	176	SLV 7	0.08	No
ini.	2	1919	-463.59	1069			1698	0	SLV 6	0	No
fin.	2	2089	530.97	1489			1698	0	SLV 6	0	No
ini.	2	1919	-463.59	1069			1698	0	SLV 5	0	No
fin.	2	2089	530.97	1489			1698	0	SLV 5	0	No
ini.	2	3324	146.02	1			1698	0	SLV 3	0	No
fin.	2	2008	-91.83	-552			1698	0	SLV 3	0	No
ini.	2	924	-373.07	864			1698	390	SLV 10	0.45	No
fin.	2	1752	480.15	1182			1698	0	SLV 10	0	No

Tabella dei coefficienti di sicurezza minimi

Stato limite	Coeff.s.	Comb.	Verifica
PF_SLV	3.23	SLV 11	Si
V_SLV	0	SLV 1	No
PF_SLU	5.759	SLU 78	Si
V_SLU	0	SLU 1	No

Trave di accoppiamento 141

Verifiche condotte secondo D.M. 17-01-18 (N.T.C.)

Dati geometrici

X ini.	Y ini.	Z ini.inf.	Z ini.sup.	H ini.	X fin.	Y fin.	Z fin.inf.	Z fin.sup	H fin.	Luce	Spessore	R. Trazione
-21.849	5.798	11.45	12.35	0.9	-22.849	5.798	11.45	12.35	0.9	1	0.28	30000

Caratteristiche del materiale

(Circolare 7 21-01-19 C8.5.I) Muratura in mattoni pieni e malta di calce LC2_Corti

fb_	fhk	fvk0	fhmedio	τ0	fv0	μ	ϕ	fvk,lim	E	G	FC
120000			172500	9000	20000	0.577	0.767	6500	320000000	128000000	1.2

Verifiche a pressoflessione delle travi in muratura in combinazioni non sismiche

Sezione	γM	N	M	Mu	Comb.	c.s.	Verifica
ini.	3	-922	511.98	1150.68	SLU 70	2.25	Si
fin.	3	498	-494.72	1150.68	SLU 70	2.33	Si
ini.	3	-1080	542.17	1150.68	SLU 83	2.12	Si
fin.	3	407	-522.1	1150.68	SLU 83	2.2	Si
ini.	3	-984	523.56	1150.68	SLU 75	2.2	Si
fin.	3	459	-510	1150.68	SLU 75	2.26	Si
ini.	3	-987	519.68	1150.68	SLU 74	2.21	Si
fin.	3	439	-501.96	1150.68	SLU 74	2.29	Si
ini.	3	-1056	565.86	1150.68	SLU 78	2.03	Si
fin.	3	511	-548.78	1150.68	SLU 78	2.1	Si
ini.	3	-1060	561.98	1150.68	SLU 77	2.05	Si
fin.	3	490	-540.74	1150.68	SLU 77	2.13	Si
ini.	3	-1017	525.55	1150.68	SLU 76	2.19	Si
fin.	3	436	-512.33	1150.68	SLU 76	2.25	Si
ini.	3	-1091	565.26	1150.68	SLU 80	2.04	Si
fin.	3	474	-545.75	1150.68	SLU 80	2.11	Si
ini.	3	-1095	561.38	1150.68	SLU 79	2.05	Si
fin.	3	453	-537.71	1150.68	SLU 79	2.14	Si
ini.	3	-1076	546.06	1150.68	SLU 84	2.11	Si
fin.	3	428	-530.14	1150.68	SLU 84	2.17	Si

Verifiche a taglio delle travi in muratura secondo §C8.7.1.3.1 in combinazioni non sismiche

Sezione	γM	N	M	V	Vt	Vp	Vt fess. diag.	Vt,lim	Comb.	c.s.	Verifica
ini.	3	-1056	565.86	-1795			1254	494	SLU 78	0.28	No
fin.	3	511	-548.78	-1856			873	206	SLU 78	0.11	No

Sezione	γM	N	M	V	Vt	Vp	Vt fess. diag.	Vt,lim	Comb.	c.s.	Verifica
ini.	3	-1091	565.26	-1772			1266	498	SLU 80	0.28	No
fin.	3	474	-545.75	-1868			873	217	SLU 80	0.12	No
ini.	3	-1095	561.38	-1756			1268	499	SLU 79	0.28	No
fin.	3	453	-537.71	-1846			873	223	SLU 79	0.12	No
ini.	3	-1060	561.98	-1779			1255	494	SLU 77	0.28	No
fin.	3	490	-540.74	-1833			873	212	SLU 77	0.12	No
ini.	3	-984	523.56	-1626			1228	484	SLU 75	0.3	No
fin.	3	459	-510	-1753			873	221	SLU 75	0.13	No
ini.	3	-1080	542.17	-1632			1262	497	SLU 83	0.3	No
fin.	3	407	-522.1	-1847			873	236	SLU 83	0.13	No
ini.	3	-1017	525.55	-1614			1239	489	SLU 76	0.3	No
fin.	3	436	-512.33	-1781			873	228	SLU 76	0.13	No
ini.	3	-1076	546.06	-1648			1261	496	SLU 84	0.3	No
fin.	3	428	-530.14	-1870			873	230	SLU 84	0.12	No
ini.	3	-987	519.68	-1609			1229	485	SLU 74	0.3	No
fin.	3	439	-501.96	-1730			873	227	SLU 74	0.13	No
ini.	3	-922	511.98	-1690			1205	476	SLU 70	0.28	No
fin.	3	498	-494.72	-1613			873	210	SLU 70	0.13	No

Verifiche a pressoflessione delle travi in muratura in combinazioni sismiche

Sezione	γM	N	M	Mu	Comb.	c.s.	Verifica
ini.	2	-924	704.02	1726.01	SLV 1	2.45	Si
fin.	2	1401	-814.51	1726.01	SLV 1	2.12	Si
ini.	2	-3301	951.41	1726.01	SLV 8	1.81	Si
fin.	2	-1254	-297.3	1726.01	SLV 8	5.81	Si
ini.	2	-2343	985.52	1726.01	SLV 4	1.75	Si
fin.	2	381	-722.66	1726.01	SLV 4	2.39	Si
ini.	2	1429	13.1	1726.01	SLV 6	131.77	Si
fin.	2	2145	-603.45	1726.01	SLV 6	2.86	Si
ini.	2	-3301	951.41	1726.01	SLV 7	1.81	Si
fin.	2	-1254	-297.3	1726.01	SLV 7	5.81	Si
ini.	2	-2704	640.69	1726.01	SLV 11	2.69	Si
fin.	2	-1637	-24.55	1726.01	SLV 11	70.32	Si
ini.	2	1429	13.1	1726.01	SLV 5	131.77	Si
fin.	2	2145	-603.45	1726.01	SLV 5	2.86	Si
ini.	2	-2343	985.52	1726.01	SLV 3	1.75	Si
fin.	2	381	-722.66	1726.01	SLV 3	2.39	Si
ini.	2	-924	704.02	1726.01	SLV 2	2.45	Si
fin.	2	1401	-814.51	1726.01	SLV 2	2.12	Si
ini.	2	-2704	640.69	1726.01	SLV 12	2.69	Si
fin.	2	-1637	-24.55	1726.01	SLV 12	70.32	Si

Verifiche a taglio delle travi in muratura secondo §C8.7.1.3.1 in combinazioni sismiche

Sezione	γM	N	M	V	Vt	Vp	Vt fess. diag.	Vt,lim	Comb.	c.s.	Verifica
ini.	2	2026	-297.63	864			1310	0	SLV 10	0	No
fin.	2	1763	-330.7	-903			1310	0	SLV 10	0	No
ini.	2	1068	-331.73	1153			1310	192	SLV 14	0.17	No
fin.	2	127	94.67	464			1310	467	SLV 14	1.01	Si
ini.	2	1429	13.1	-189			1310	0	SLV 6	0	No
fin.	2	2145	-603.45	-1891			1310	0	SLV 6	0	No
ini.	2	1429	13.1	-189			1310	0	SLV 5	0	No
fin.	2	2145	-603.45	-1891			1310	0	SLV 5	0	No
ini.	2	-924	704.02	-2355			1643	649	SLV 1	0.28	No
fin.	2	1401	-814.51	-2829			1310	0	SLV 1	0	No
ini.	2	-924	704.02	-2355			1643	649	SLV 2	0.28	No
fin.	2	1401	-814.51	-2829			1310	0	SLV 2	0	No
ini.	2	-2343	985.52	-3159			2154	834	SLV 4	0.26	No
fin.	2	381	-722.66	-2645			1310	412	SLV 4	0.16	No
ini.	2	2026	-297.63	864			1310	0	SLV 9	0	No
fin.	2	1763	-330.7	-903			1310	0	SLV 9	0	No
ini.	2	-2343	985.52	-3159			2154	834	SLV 3	0.26	No
fin.	2	381	-722.66	-2645			1310	412	SLV 3	0.16	No
ini.	2	1068	-331.73	1153			1310	192	SLV 13	0.17	No
fin.	2	127	94.67	464			1310	467	SLV 13	1.01	Si

Tabella dei coefficienti di sicurezza minimi

Stato limite	Coeff.s.	Comb.	Verifica
PF_SLV	1.751	SLV 3	Si
V_SLV	0	SLV 1	No
PF_SLU	2.033	SLU 78	Si
V_SLU	0.111	SLU 78	No

Trave di accoppiamento 142

Verifiche condotte secondo D.M. 17-01-18 (N.T.C.)

Dati geometrici

X ini.	Y ini.	Z ini.inf.	Z ini.sup.	H ini.	X fin.	Y fin.	Z fin.inf.	Z fin.sup	H fin.	Luce	Spessore	R. Trazione
-21.849	5.798	14.25	14.6	0.35	-22.849	5.798	14.25	14.6	0.35	1	0.28	30000

Caratteristiche del materiale

(Circolare 7 21-01-19 C8.5.I) Muratura in mattoni pieni e malta di calce LC2_Corti

fb_	fhk	fvk0	fhmedio	τ0	fv0	μ	ϕ	fvk,lim	E	G	FC
120000			172500	9000	20000	0.577	0.767	6500	320000000	128000000	1.2

Verifiche a pressoflessione delle travi in muratura in combinazioni non sismiche

Sezione	γM	N	M	Mu	Comb.	c.s.	Verifica
ini.	3	555	150.32	174.02	SLU 74	1.16	Si
fin.	3	-366	-201.77	174.02	SLU 74	0.86	No
ini.	3	644	168.42	174.02	SLU 84	1.03	Si
fin.	3	-313	-200.39	174.02	SLU 84	0.87	No
ini.	3	655	171.08	174.02	SLU 80	1.02	Si
fin.	3	-255	-197.32	174.02	SLU 80	0.88	No
ini.	3	616	167.18	174.02	SLU 83	1.04	Si
fin.	3	-346	-200.17	174.02	SLU 83	0.87	No
ini.	3	610	157.01	174.02	SLU 82	1.11	Si
fin.	3	-337	-194.18	174.02	SLU 82	0.9	No
ini.	3	627	169.84	174.02	SLU 79	1.02	Si
fin.	3	-288	-197.1	174.02	SLU 79	0.88	No
ini.	3	582	155.77	174.02	SLU 81	1.12	Si
fin.	3	-370	-193.96	174.02	SLU 81	0.9	No
ini.	3	589	161.73	174.02	SLU 77	1.08	Si
fin.	3	-342	-207.98	174.02	SLU 77	0.84	No
ini.	3	584	151.56	174.02	SLU 75	1.15	Si
fin.	3	-333	-201.99	174.02	SLU 75	0.86	No
ini.	3	618	162.97	174.02	SLU 78	1.07	Si
fin.	3	-309	-208.2	174.02	SLU 78	0.84	No

Verifiche a taglio delle travi in muratura secondo §C8.7.1.3.1 in combinazioni non sismiche

Sezione	γM	N	M	V	Vt	Vp	Vt fess. diag.	Vt,lim	Comb.	c.s.	Verifica
ini.	3	562	148.54	-344			252	0	SLU 58	0	No
fin.	3	-221	-173.27	-798			311	123	SLU 58	0.15	No
ini.	3	357	86.64	-188			252	0	SLU 1	0	No
fin.	3	-162	-113.35	-524			295	116	SLU 1	0.22	No
ini.	3	518	130.26	-263			252	0	SLU 54	0	No
fin.	3	-267	-178.16	-825			323	128	SLU 54	0.15	No
ini.	3	575	139.2	-321			252	0	SLU 55	0	No
fin.	3	-190	-167.43	-760			302	119	SLU 55	0.16	No
ini.	3	545	135.71	-325			252	0	SLU 61	0	No
fin.	3	-271	-170.36	-752			324	128	SLU 61	0.17	No
ini.	3	552	141.66	-289			252	0	SLU 57	0	No
fin.	3	-243	-184.37	-864			316	125	SLU 57	0.14	No
ini.	3	590	149.78	-346			252	0	SLU 59	0	No
fin.	3	-188	-173.49	-799			302	119	SLU 59	0.15	No
ini.	3	524	140.42	-287			252	0	SLU 56	0	No
fin.	3	-276	-184.15	-863			325	129	SLU 56	0.15	No
ini.	3	517	134.47	-323			252	0	SLU 60	0	No
fin.	3	-304	-170.14	-751			333	132	SLU 60	0.18	No
ini.	3	490	129.02	-261			252	0	SLU 53	0	No
fin.	3	-300	-177.94	-825			332	131	SLU 53	0.16	No

Verifiche a pressoflessione delle travi in muratura in combinazioni sismiche

Sezione	γM	N	M	Mu	Comb.	c.s.	Verifica
ini.	2	-1325	-200.19	261.03	SLV 3	1.3	Si
fin.	2	-421	-184.17	261.03	SLV 3	1.42	Si
ini.	2	-3930	-119.75	261.03	SLV 7	2.18	Si
fin.	2	-3136	-175.33	261.03	SLV 7	1.49	Si
ini.	2	-3930	-119.75	261.03	SLV 8	2.18	Si
fin.	2	-3136	-175.33	261.03	SLV 8	1.49	Si
ini.	2	2106	397.31	261.03	SLV 13	0.66	No
fin.	2	13	-68.52	261.03	SLV 13	3.81	Si
ini.	2	2106	397.31	261.03	SLV 14	0.66	No
fin.	2	13	-68.52	261.03	SLV 14	3.81	Si
ini.	2	4711	316.87	261.03	SLV 10	0.82	No
fin.	2	2727	-77.37	261.03	SLV 10	3.37	Si
ini.	2	-404	312.46	261.03	SLV 15	0.84	No
fin.	2	-1877	-89.37	261.03	SLV 15	2.92	Si
ini.	2	-1325	-200.19	261.03	SLV 4	1.3	Si
fin.	2	-421	-184.17	261.03	SLV 4	1.42	Si
ini.	2	4711	316.87	261.03	SLV 9	0.82	No
fin.	2	2727	-77.37	261.03	SLV 9	3.37	Si
ini.	2	-404	312.46	261.03	SLV 16	0.84	No
fin.	2	-1877	-89.37	261.03	SLV 16	2.92	Si

Verifiche a taglio delle travi in muratura secondo §C8.7.1.3.1 in combinazioni sismiche

Sezione	γM	N	M	V	Vt	Vp	Vt fess. diag.	Vt,lim	Comb.	c.s.	Verifica
ini.	2	-404	312.46	-140			485	192	SLV 16	1.37	Si
fin.	2	-1877	-89.37	-901			878	312	SLV 16	0.35	No
ini.	2	-404	312.46	-140			485	192	SLV 15	1.37	Si
fin.	2	-1877	-89.37	-901			878	312	SLV 15	0.35	No
ini.	2	4711	316.87	-827			377	0	SLV 9	0	No
fin.	2	2727	-77.37	-704			377	0	SLV 9	0	No
ini.	2	4435	163.07	-775			377	0	SLV 6	0	No
fin.	2	3164	-105.81	-499			377	0	SLV 6	0	No
ini.	2	1185	-115.34	-311			377	0	SLV 1	0	No
fin.	2	1469	-163.32	-239			377	0	SLV 1	0	No
ini.	2	4711	316.87	-827			377	0	SLV 10	0	No
fin.	2	2727	-77.37	-704			377	0	SLV 10	0	No
ini.	2	4435	163.07	-775			377	0	SLV 5	0	No
fin.	2	3164	-105.81	-499			377	0	SLV 5	0	No
ini.	2	1185	-115.34	-311			377	0	SLV 2	0	No
fin.	2	1469	-163.32	-239			377	0	SLV 2	0	No
ini.	2	2106	397.31	-485			377	0	SLV 13	0	No
fin.	2	13	-68.52	-920			377	140	SLV 13	0.15	No
ini.	2	2106	397.31	-485			377	0	SLV 14	0	No
fin.	2	13	-68.52	-920			377	140	SLV 14	0.15	No

Tabella dei coefficienti di sicurezza minimi

Stato limite	Coeff.s.	Comb.	Verifica
PF_SLV	0.657	SLV 13	No
V_SLV	0	SLV 1	No
PF_SLU	0.836	SLU 78	No
V_SLU	0	SLU 1	No

Trave di accoppiamento 143

Verifiche condotte secondo D.M. 17-01-18 (N.T.C.)

Dati geometrici

X ini.	Y ini.	Z ini.inf.	Z ini.sup.	H ini.	X fin.	Y fin.	Z fin.inf.	Z fin.sup	H fin.	Luce	Spessore	R. Trazione
-21.608	-3.254	11.45	12.35	0.9	-22.608	-3.254	11.45	12.35	0.9	1	0.28	30000

Caratteristiche del materiale

(Circolare 7 21-01-19 C8.5.I) Muratura in mattoni pieni e malta di calce LC2_Corti

fb_	fhk	fvk0	fhmedio	τ0	fv0	μ	ϕ	fvk,lim	E	G	FC
120000			172500	9000	20000	0.577	0.767	6500	320000000	128000000	1.2

Verifiche a pressoflessione delle travi in muratura in combinazioni non sismiche

Sezione	γM	N	M	Mu	Comb.	c.s.	Verifica
ini.	3	-913	394.81	1150.68	SLU 36	2.91	Si
fin.	3	193	-259.5	1150.68	SLU 36	4.43	Si
ini.	3	-1010	430.65	1150.68	SLU 80	2.67	Si
fin.	3	207	-290.32	1150.68	SLU 80	3.96	Si
ini.	3	-1080	395.63	1150.68	SLU 82	2.91	Si
fin.	3	8	-232.64	1150.68	SLU 82	4.95	Si
ini.	3	-917	391.37	1150.68	SLU 38	2.94	Si
fin.	3	183	-262.63	1150.68	SLU 38	4.38	Si
ini.	3	-1163	410.22	1150.68	SLU 73	2.81	Si
fin.	3	-119	-190.19	1150.68	SLU 73	6.05	Si
ini.	3	-1076	423.29	1150.68	SLU 84	2.72	Si
fin.	3	109	-269.99	1150.68	SLU 84	4.26	Si
ini.	3	-1010	406.42	1150.68	SLU 75	2.83	Si
fin.	3	116	-249.83	1150.68	SLU 75	4.61	Si
ini.	3	-1158	437.88	1150.68	SLU 76	2.63	Si
fin.	3	-18	-227.54	1150.68	SLU 76	5.06	Si
ini.	3	-1006	434.08	1150.68	SLU 78	2.65	Si
fin.	3	217	-287.19	1150.68	SLU 78	4.01	Si
ini.	3	-1066	398.61	1150.68	SLU 34	2.89	Si
fin.	3	-42	-199.85	1150.68	SLU 34	5.76	Si

Verifiche a taglio delle travi in muratura secondo §C8.7.1.3.1 in combinazioni non sismiche

Sezione	γM	N	M	V	Vt	Vp	Vt fess. diag.	Vt,lim	Comb.	c.s.	Verifica
ini.	3	-795	378.31	-1271			1160	459	SLU 79	0.36	No
fin.	3	392	-328.45	-1181			873	240	SLU 79	0.2	No
ini.	3	-790	381.74	-1296			1158	458	SLU 77	0.35	No
fin.	3	403	-325.32	-1159			873	237	SLU 77	0.2	No
ini.	3	-861	370.95	-1177			1183	468	SLU 83	0.4	No
fin.	3	295	-308.12	-1194			873	265	SLU 83	0.22	No
ini.	3	-795	354.08	-1159			1160	459	SLU 74	0.4	No
fin.	3	302	-287.96	-1082			873	263	SLU 74	0.24	No
ini.	3	-698	342.47	-1156			1125	445	SLU 35	0.38	No
fin.	3	379	-297.62	-1067			873	244	SLU 35	0.23	No
ini.	3	-768	331.68	-1038			1150	455	SLU 41	0.44	No
fin.	3	271	-280.43	-1101			873	271	SLU 41	0.25	No
ini.	3	-1010	430.65	-1359			1237	488	SLU 80	0.36	No
fin.	3	207	-290.32	-1145			873	285	SLU 80	0.25	No
ini.	3	-702	339.03	-1131			1126	445	SLU 37	0.39	No
fin.	3	368	-300.76	-1088			873	246	SLU 37	0.23	No
ini.	3	-1006	434.08	-1384			1235	487	SLU 78	0.35	No
fin.	3	217	-287.19	-1124			873	283	SLU 78	0.25	No
ini.	3	-652	330.94	-1171			1108	438	SLU 71	0.37	No
fin.	3	385	-288.71	-969			873	242	SLU 71	0.25	No

Verifiche a pressoflessione delle travi in muratura in combinazioni sismiche

Sezione	γM	N	M	Mu	Comb.	c.s.	Verifica
ini.	2	1090	-569.74	1726.01	SLV 15	3.03	Si
fin.	2	-1190	576.51	1726.01	SLV 15	2.99	Si
ini.	2	-2478	792.22	1726.01	SLV 5	2.18	Si
fin.	2	-459	-305.15	1726.01	SLV 5	5.66	Si
ini.	2	1090	-569.74	1726.01	SLV 16	3.03	Si
fin.	2	-1190	576.51	1726.01	SLV 16	2.99	Si
ini.	2	-1164	773.62	1726.01	SLV 4	2.23	Si
fin.	2	2114	-964.56	1726.01	SLV 4	1.79	Si
ini.	2	-2478	792.22	1726.01	SLV 6	2.18	Si
fin.	2	-459	-305.15	1726.01	SLV 6	5.66	Si
ini.	2	-1164	773.62	1726.01	SLV 3	2.23	Si
fin.	2	2114	-964.56	1726.01	SLV 3	1.79	Si
ini.	2	119	-344.15	1726.01	SLV 14	5.02	Si
fin.	2	-1844	631.91	1726.01	SLV 14	2.73	Si
ini.	2	-2134	999.21	1726.01	SLV 1	1.73	Si
fin.	2	1460	-909.16	1726.01	SLV 1	1.9	Si
ini.	2	119	-344.15	1726.01	SLV 13	5.02	Si
fin.	2	-1844	631.91	1726.01	SLV 13	2.73	Si
ini.	2	-2134	999.21	1726.01	SLV 2	1.73	Si

Sezione	γM	N	M	Mu	Comb.	c.s.	Verifica
fin.	2	1460	-909.16	1726.01	SLV 2	1.9	Si

Verifiche a taglio delle travi in muratura secondo §C8.7.1.3.1 in combinazioni sismiche

Sezione	γM	N	M	V	Vt	Vp	Vt fess. diag.	Vt,lim	Comb.	c.s.	Verifica
ini.	2	1090	-569.74	2334			1310	181	SLV 15	0.08	No
fin.	2	-1190	576.51	1923			1739	688	SLV 15	0.36	No
ini.	2	757	40.25	-520			1310	312	SLV 8	0.6	No
fin.	2	1721	-489.82	-1565			1310	0	SLV 8	0	No
ini.	2	-1164	773.62	-3119			1729	684	SLV 4	0.22	No
fin.	2	2114	-964.56	-3294			1310	0	SLV 4	0	No
ini.	2	-1164	773.62	-3119			1729	684	SLV 3	0.22	No
fin.	2	2114	-964.56	-3294			1310	0	SLV 3	0	No
ini.	2	757	40.25	-520			1310	312	SLV 7	0.6	No
fin.	2	1721	-489.82	-1565			1310	0	SLV 7	0	No
ini.	2	1433	-362.76	1116			1310	0	SLV 11	0	No
fin.	2	729	-27.5	0			1310	320	SLV 11	669.34	Si
ini.	2	1090	-569.74	2334			1310	181	SLV 16	0.08	No
fin.	2	-1190	576.51	1923			1739	688	SLV 16	0.36	No
ini.	2	-2134	999.21	-3712			2079	809	SLV 2	0.22	No
fin.	2	1460	-909.16	-3211			1310	0	SLV 2	0	No
ini.	2	1433	-362.76	1116			1310	0	SLV 12	0	No
fin.	2	729	-27.5	0			1310	320	SLV 12	669.34	Si
ini.	2	-2134	999.21	-3712			2079	809	SLV 1	0.22	No
fin.	2	1460	-909.16	-3211			1310	0	SLV 1	0	No

Tabella dei coefficienti di sicurezza minimi

Stato limite	Coeff.s.	Comb.	Verifica
PF_SLV	1.727	SLV 1	Si
V_SLV	0	SLV 1	No
PF_SLU	2.628	SLU 76	Si
V_SLU	0.203	SLU 79	No

Trave di accoppiamento 144

Verifiche condotte secondo D.M. 17-01-18 (N.T.C.)

Dati geometrici

X ini.	Y ini.	Z ini.inf.	Z ini.sup.	H ini.	X fin.	Y fin.	Z fin.inf.	Z fin.sup	H fin.	Luce	Spessore	R. Trazione
-21.608	-3.254	14.25	14.6	0.35	-22.608	-3.254	14.25	14.6	0.35	1	0.28	30000

Caratteristiche del materiale

(Circolare 7 21-01-19 C8.5.I) Muratura in mattoni pieni e malta di calce LC2_Corti

fb_	fhk	fvk0	fhmedio	τ0	fv0	μ	ϕ	fvk,lim	E	G	FC
120000			172500	9000	20000	0.577	0.767	6500	320000000	128000000	1.2

Verifiche a pressoflessione delle travi in muratura in combinazioni non sismiche

Sezione	γM	N	M	Mu	Comb.	c.s.	Verifica
ini.	3	-999	29.43	174.02	SLU 65	5.91	Si
fin.	3	-1276	-161.33	174.02	SLU 65	1.08	Si
ini.	3	-893	35.18	174.02	SLU 55	4.95	Si
fin.	3	-1250	-162.26	174.02	SLU 55	1.07	Si
ini.	3	-912	43.8	174.02	SLU 34	3.97	Si
fin.	3	-1315	-165.99	174.02	SLU 34	1.05	Si
ini.	3	-1015	43.36	174.02	SLU 73	4.01	Si
fin.	3	-1395	-177.59	174.02	SLU 73	0.98	No
ini.	3	-424	37.44	174.02	SLU 75	4.65	Si
fin.	3	-975	-152.65	174.02	SLU 75	1.14	Si
ini.	3	-1042	33.05	174.02	SLU 52	5.27	Si
fin.	3	-1312	-163.13	174.02	SLU 52	1.07	Si
ini.	3	-850	31.56	174.02	SLU 68	5.51	Si
fin.	3	-1214	-160.46	174.02	SLU 68	1.08	Si
ini.	3	-1061	41.68	174.02	SLU 31	4.18	Si
fin.	3	-1377	-166.86	174.02	SLU 31	1.04	Si
ini.	3	-866	45.49	174.02	SLU 76	3.83	Si
fin.	3	-1333	-176.72	174.02	SLU 76	0.98	No
ini.	3	-1088	31.36	174.02	SLU 10	5.55	Si
fin.	3	-1294	-152.4	174.02	SLU 10	1.14	Si

Verifiche a taglio delle travi in muratura secondo §C8.7.1.3.1 in combinazioni non sismiche

Sezione	γM	N	M	V	Vt	Vp	Vt fess. diag.	Vt,lim	Comb.	c.s.	Verifica
ini.	3	478	39.55	195			252	0	SLU 77	0	No
fin.	3	-300	-101.47	-433			332	131	SLU 77	0.3	No
ini.	3	553	33.67	200			252	0	SLU 71	0	No
fin.	3	-131	-75.75	-320			287	112	SLU 71	0.35	No
ini.	3	381	51.44	87			252	0	SLU 83	0	No
fin.	3	-363	-99.85	-408			348	138	SLU 83	0.34	No
ini.	3	449	23.93	210			252	0	SLU 27	0	No
fin.	3	-163	-74.48	-324			295	116	SLU 27	0.36	No
ini.	3	508	31.98	163			252	0	SLU 29	0	No
fin.	3	-113	-65.02	-263			282	110	SLU 29	0.42	No
ini.	3	335	49.75	50			252	0	SLU 41	0	No
fin.	3	-345	-89.12	-351			344	136	SLU 41	0.39	No
ini.	3	464	35.6	131			252	0	SLU 16	0	No
fin.	3	-149	-66.82	-267			291	114	SLU 16	0.43	No
ini.	3	329	37.42	155			252	0	SLU 74	0	No
fin.	3	-363	-102.34	-448			348	138	SLU 74	0.31	No
ini.	3	405	27.55	177			252	0	SLU 14	0	No

Sezione	γM	N	M	V	Vt	Vp	Vt fess. diag.	Vt,lim	Comb.	c.s.	Verifica
fin.	3	-200	-76.28	-328			305	120	SLU 14	0.37	No
ini.	3	467	15.3	265			252	0	SLU 48	0	No
fin.	3	-99	-70.75	-334			278	108	SLU 48	0.32	No

Verifiche a pressoflessione delle travi in muratura in combinazioni sismiche

Sezione	γM	N	M	Mu	Comb.	c.s.	Verifica
ini.	2	2712	244.35	261.03	SLV 3	1.07	Si
fin.	2	1781	-29.56	261.03	SLV 3	8.83	Si
ini.	2	-2844	93.63	261.03	SLV 5	2.79	Si
fin.	2	-2701	-211	261.03	SLV 5	1.24	Si
ini.	2	-3735	-38.93	261.03	SLV 10	6.71	Si
fin.	2	-3387	-203.59	261.03	SLV 10	1.28	Si
ini.	2	-255	-197.49	261.03	SLV 16	1.32	Si
fin.	2	-506	-4.86	261.03	SLV 16	53.72	Si
ini.	2	627	246.16	261.03	SLV 2	1.06	Si
fin.	2	82	-117.29	261.03	SLV 2	2.23	Si
ini.	2	-3735	-38.93	261.03	SLV 9	6.71	Si
fin.	2	-3387	-203.59	261.03	SLV 9	1.28	Si
ini.	2	-2844	93.63	261.03	SLV 6	2.79	Si
fin.	2	-2701	-211	261.03	SLV 6	1.24	Si
ini.	2	627	246.16	261.03	SLV 1	1.06	Si
fin.	2	82	-117.29	261.03	SLV 1	2.23	Si
ini.	2	2712	244.35	261.03	SLV 4	1.07	Si
fin.	2	1781	-29.56	261.03	SLV 4	8.83	Si
ini.	2	-255	-197.49	261.03	SLV 15	1.32	Si
fin.	2	-506	-4.86	261.03	SLV 15	53.72	Si

Verifiche a taglio delle travi in muratura secondo §C8.7.1.3.1 in combinazioni sismiche

Sezione	γM	N	M	V	Vt	Vp	Vt fess. diag.	Vt,lim	Comb.	c.s.	Verifica
ini.	2	627	246.16	-806			377	0	SLV 1	0	No
fin.	2	82	-117.29	-1470			377	130	SLV 1	0.09	No
ini.	2	4106	87.6	-67			377	0	SLV 7	0	No
fin.	2	2963	81.44	356			377	0	SLV 7	0	No
ini.	2	2712	244.35	-741			377	0	SLV 4	0	No
fin.	2	1781	-29.56	-926			377	0	SLV 4	0	No
ini.	2	3216	-44.95	447			377	0	SLV 11	0	No
fin.	2	2276	88.85	910			377	0	SLV 11	0	No
ini.	2	-255	-197.49	969			446	175	SLV 16	0.18	No
fin.	2	-506	-4.86	923			512	203	SLV 16	0.22	No
ini.	2	2712	244.35	-741			377	0	SLV 3	0	No
fin.	2	1781	-29.56	-926			377	0	SLV 3	0	No
ini.	2	3216	-44.95	447			377	0	SLV 12	0	No
fin.	2	2276	88.85	910			377	0	SLV 12	0	No
ini.	2	627	246.16	-806			377	0	SLV 2	0	No
fin.	2	82	-117.29	-1470			377	130	SLV 2	0.09	No
ini.	2	4106	87.6	-67			377	0	SLV 8	0	No
fin.	2	2963	81.44	356			377	0	SLV 8	0	No
ini.	2	-255	-197.49	969			446	175	SLV 15	0.18	No
fin.	2	-506	-4.86	923			512	203	SLV 15	0.22	No

Tabella dei coefficienti di sicurezza minimi

Stato limite	Coeff.s.	Comb.	Verifica
PF_SLV	1.06	SLV 1	Si
V_SLV	0	SLV 1	No
PF_SLU	0.98	SLU 73	No
V_SLU	0	SLU 6	No

Trave di accoppiamento 145

Verifiche condotte secondo D.M. 17-01-18 (N.T.C.)

Dati geometrici

X ini.	Y ini.	Z ini.inf.	Z ini.sup.	H ini.	X fin.	Y fin.	Z fin.inf.	Z fin.sup	H fin.	Luce	Spessore	R. Trazione
-18.803	-3.254	11.45	13.45	2	-19.303	-3.254	11.45	13.45	2	0.5	0.28	30000

Caratteristiche del materiale

(Circolare 7 21-01-19 C8.5.I) Muratura in mattoni pieni e malta di calce LC2_Corti

fb_	fhk	fvk0	fhmedio	τ0	fv0	μ	ϕ	fvk,lim	E	G	FC
120000			172500	9000	20000	0.577	0.767	6500	320000000	128000000	1.2

Verifiche a pressoflessione delle travi in muratura in combinazioni non sismiche

Sezione	γM	N	M	Mu	Comb.	c.s.	Verifica
ini.	3	22	427.06	5682.35	SLU 75	13.31	Si
fin.	3	-149	242.71	5682.35	SLU 75	23.41	Si
ini.	3	80	427.34	5682.35	SLU 76	13.3	Si
fin.	3	-71	200.9	5682.35	SLU 76	28.29	Si
ini.	3	82	430.6	5682.35	SLU 84	13.2	Si
fin.	3	-93	226.21	5682.35	SLU 84	25.12	Si
ini.	3	166	464.29	5682.35	SLU 80	12.24	Si
fin.	3	9	207.87	5682.35	SLU 80	27.34	Si
ini.	3	127	479.75	5682.35	SLU 78	11.84	Si
fin.	3	-45	235.43	5682.35	SLU 78	24.14	Si
ini.	3	139	440.69	5682.35	SLU 79	12.89	Si
fin.	3	-25	229.26	5682.35	SLU 79	24.79	Si
ini.	3	162	431.93	5682.35	SLU 36	13.16	Si
fin.	3	4	196.83	5682.35	SLU 36	28.87	Si
ini.	3	110	440.64	5682.35	SLU 57	12.9	Si

Sezione	γM	N	M	Mu	Comb.	c.s.	Verifica
fin.	3	-34	211.73	5682.35	SLU 57	26.84	Si
ini.	3	79	435.43	5682.35	SLU 70	13.05	Si
fin.	3	-47	209.64	5682.35	SLU 70	27.11	Si
ini.	3	100	456.15	5682.35	SLU 77	12.46	Si
fin.	3	-79	256.81	5682.35	SLU 77	22.13	Si

Verifiche a taglio delle travi in muratura secondo §C8.7.1.3.1 in combinazioni non sismiche

Sezione	γM	N	M	V	Vt	Vp	Vt fess. diag.	Vt,lim	Comb.	c.s.	Verifica
ini.	3	35	372.72	-829			2157	804	SLU 48	0.97	No
fin.	3	-71	207.33	503			2185	827	SLU 48	1.64	Si
ini.	3	79	435.43	-856			2157	794	SLU 70	0.93	No
fin.	3	-47	209.64	401			2176	822	SLU 70	2.05	Si
ini.	3	52	411.83	-800			2157	800	SLU 69	1	Si
fin.	3	-82	231.03	526			2189	829	SLU 69	1.58	Si
ini.	3	102	380.87	-891			2157	789	SLU 51	0.89	No
fin.	3	18	158.38	284			2157	808	SLU 51	2.84	Si
ini.	3	149	425.18	-795			2157	778	SLU 59	0.98	No
fin.	3	20	184.17	299			2157	807	SLU 59	2.7	Si
ini.	3	92	396.38	-807			2157	791	SLU 71	0.98	No
fin.	3	-27	203.47	431			2168	818	SLU 71	1.9	Si
ini.	3	119	419.98	-863			2157	785	SLU 72	0.91	No
fin.	3	7	182.08	306			2157	810	SLU 72	2.64	Si
ini.	3	75	357.27	-836			2157	795	SLU 50	0.95	No
fin.	3	-16	179.77	409			2163	815	SLU 50	1.99	Si
ini.	3	110	440.64	-788			2157	787	SLU 57	1	No
fin.	3	-34	211.73	393			2170	819	SLU 57	2.08	Si
ini.	3	62	396.32	-884			2157	798	SLU 49	0.9	No
fin.	3	-36	185.94	378			2171	819	SLU 49	2.17	Si

Verifiche a pressoflessione delle travi in muratura in combinazioni sismiche

Sezione	γM	N	M	Mu	Comb.	c.s.	Verifica
ini.	2	436	1196.81	8523.53	SLV 8	7.12	Si
fin.	2	-161	649.6	8523.53	SLV 8	13.12	Si
ini.	2	-731	1087.27	8523.53	SLV 11	7.84	Si
fin.	2	-1368	1289.31	8523.53	SLV 11	6.61	Si
ini.	2	-2045	319.6	8523.53	SLV 16	26.67	Si
fin.	2	-2365	1475.93	8523.53	SLV 16	5.78	Si
ini.	2	1885	136.25	8523.53	SLV 2	62.56	Si
fin.	2	2010	-1136.17	8523.53	SLV 2	7.5	Si
ini.	2	1885	136.25	8523.53	SLV 1	62.56	Si
fin.	2	2010	-1136.17	8523.53	SLV 1	7.5	Si
ini.	2	-731	1087.27	8523.53	SLV 12	7.84	Si
fin.	2	-1368	1289.31	8523.53	SLV 12	6.61	Si
ini.	2	-2005	-228.87	8523.53	SLV 13	37.24	Si
fin.	2	-2013	996.18	8523.53	SLV 13	8.56	Si
ini.	2	436	1196.81	8523.53	SLV 7	7.12	Si
fin.	2	-161	649.6	8523.53	SLV 7	13.12	Si
ini.	2	-2045	319.6	8523.53	SLV 15	26.67	Si
fin.	2	-2365	1475.93	8523.53	SLV 15	5.78	Si
ini.	2	-2005	-228.87	8523.53	SLV 14	37.24	Si
fin.	2	-2013	996.18	8523.53	SLV 14	8.56	Si

Verifiche a taglio delle travi in muratura secondo §C8.7.1.3.1 in combinazioni sismiche

Sezione	γM	N	M	V	Vt	Vp	Vt fess. diag.	Vt,lim	Comb.	c.s.	Verifica
ini.	2	1845	684.72	-3298			3235	711	SLV 3	0.22	No
fin.	2	1658	-656.42	-2129			3235	777	SLV 3	0.37	No
ini.	2	-2045	319.6	4528			4053	1601	SLV 15	0.35	No
fin.	2	-2365	1475.93	4403			4181	1653	SLV 15	0.38	No
ini.	2	1885	136.25	-5158			3235	696	SLV 1	0.13	No
fin.	2	2010	-1136.17	-3567			3235	647	SLV 1	0.18	No
ini.	2	-731	1087.27	3958			3527	1367	SLV 12	0.35	No
fin.	2	-1368	1289.31	3796			3782	1485	SLV 12	0.39	No
ini.	2	1845	684.72	-3298			3235	711	SLV 4	0.22	No
fin.	2	1658	-656.42	-2129			3235	777	SLV 4	0.37	No
ini.	2	-731	1087.27	3958			3527	1367	SLV 11	0.35	No
fin.	2	-1368	1289.31	3796			3782	1485	SLV 11	0.39	No
ini.	2	571	-631.42	-4588			3235	1086	SLV 5	0.24	No
fin.	2	1013	-949.55	-2960			3235	973	SLV 5	0.33	No
ini.	2	571	-631.42	-4588			3235	1086	SLV 6	0.24	No
fin.	2	1013	-949.55	-2960			3235	973	SLV 6	0.33	No
ini.	2	-2045	319.6	4528			4053	1601	SLV 16	0.35	No
fin.	2	-2365	1475.93	4403			4181	1653	SLV 16	0.38	No
ini.	2	1885	136.25	-5158			3235	696	SLV 2	0.13	No
fin.	2	2010	-1136.17	-3567			3235	647	SLV 2	0.18	No

Tabella dei coefficienti di sicurezza minimi

Stato limite	Coeff.s.	Comb.	Verifica
PF_SLV	5.775	SLV 15	Si
V_SLV	0.135	SLV 1	No
PF_SLU	11.845	SLU 78	Si
V_SLU	0.885	SLU 51	No

Trave di accoppiamento 146

Verifiche condotte secondo D.M. 17-01-18 (N.T.C.)

Dati geometrici

X ini.	Y ini.	Z ini.inf.	Z ini.sup.	H ini.	X fin.	Y fin.	Z fin.inf.	Z fin.sup	H fin.	Luce	Spessore	R. Trazione
-18.803	-3.254	14.25	14.6	0.35	-19.303	-3.254	14.25	14.6	0.35	0.5	0.28	30000

Caratteristiche del materiale

(Circolare 7 21-01-19 C8.5.I) Muratura in mattoni pieni e malta di calce LC2_Corti

fb_	fhk	fvk0	fhmedio	τ0	fv0	μ	ϕ	fvk,lim	E	G	FC
120000			172500	9000	20000	0.577	0.767	6500	320000000	128000000	1.2

Verifiche a pressoflessione delle travi in muratura in combinazioni non sismiche

Sezione	γM	N	M	Mu	Comb.	c.s.	Verifica
ini.	3	112	232.9	174.02	SLU 56	0.75	No
fin.	3	112	-244.15	174.02	SLU 56	0.71	No
ini.	3	141	241.99	174.02	SLU 37	0.72	No
fin.	3	141	-251.74	174.02	SLU 37	0.69	No
ini.	3	165	251.01	174.02	SLU 69	0.69	No
fin.	3	165	-261.62	174.02	SLU 69	0.67	No
ini.	3	113	254.18	174.02	SLU 77	0.68	No
fin.	3	113	-265.43	174.02	SLU 77	0.66	No
ini.	3	139	244.22	174.02	SLU 58	0.71	No
fin.	3	139	-255.18	174.02	SLU 58	0.68	No
ini.	3	191	241.06	174.02	SLU 50	0.72	No
fin.	3	191	-251.37	174.02	SLU 50	0.69	No
ini.	3	114	230.66	174.02	SLU 35	0.75	No
fin.	3	114	-240.71	174.02	SLU 35	0.72	No
ini.	3	193	238.82	174.02	SLU 29	0.73	No
fin.	3	193	-247.92	174.02	SLU 29	0.7	No
ini.	3	140	265.5	174.02	SLU 79	0.66	No
fin.	3	140	-276.46	174.02	SLU 79	0.63	No
ini.	3	193	262.34	174.02	SLU 71	0.66	No
fin.	3	193	-272.65	174.02	SLU 71	0.64	No

Verifiche a taglio delle travi in muratura secondo §C8.7.1.3.1 in combinazioni non sismiche

Sezione	γM	N	M	V	Vt	Vp	Vt fess. diag.	Vt,lim	Comb.	c.s.	Verifica
ini.	3	165	251.01	-968			264	70	SLU 69	0.07	No
fin.	3	165	-261.62	-1083			264	70	SLU 69	0.06	No
ini.	3	140	265.5	-1027			264	75	SLU 79	0.07	No
fin.	3	140	-276.46	-1141			264	75	SLU 79	0.07	No
ini.	3	166	227.5	-885			264	70	SLU 27	0.08	No
fin.	3	166	-236.89	-973			264	70	SLU 27	0.07	No
ini.	3	193	238.82	-929			264	64	SLU 29	0.07	No
fin.	3	193	-247.92	-1018			264	64	SLU 29	0.06	No
ini.	3	139	244.22	-941			264	75	SLU 58	0.08	No
fin.	3	139	-255.18	-1056			264	75	SLU 58	0.07	No
ini.	3	164	229.73	-883			264	70	SLU 48	0.08	No
fin.	3	164	-240.34	-997			264	70	SLU 48	0.07	No
ini.	3	193	262.34	-1013			264	64	SLU 71	0.06	No
fin.	3	193	-272.65	-1127			264	64	SLU 71	0.06	No
ini.	3	192	217.55	-844			264	64	SLU 8	0.08	No
fin.	3	192	-226.65	-932			264	64	SLU 8	0.07	No
ini.	3	191	241.06	-928			264	64	SLU 50	0.07	No
fin.	3	191	-251.37	-1042			264	64	SLU 50	0.06	No
ini.	3	141	241.99	-943			264	75	SLU 37	0.08	No
fin.	3	141	-251.74	-1032			264	75	SLU 37	0.07	No

Verifiche a pressoflessione delle travi in muratura in combinazioni sismiche

Sezione	γM	N	M	Mu	Comb.	c.s.	Verifica
ini.	2	-626	206.58	261.03	SLV 15	1.26	Si
fin.	2	-1208	-40.28	261.03	SLV 15	6.48	Si
ini.	2	-4436	156.68	261.03	SLV 7	1.67	Si
fin.	2	-4274	-223.82	261.03	SLV 7	1.17	Si
ini.	2	-4042	202.25	261.03	SLV 11	1.29	Si
fin.	2	-4227	-165.14	261.03	SLV 11	1.58	Si
ini.	2	-626	206.58	261.03	SLV 16	1.26	Si
fin.	2	-1208	-40.28	261.03	SLV 16	6.48	Si
ini.	2	595	12.8	261.03	SLV 2	20.39	Si
fin.	2	1177	-187.53	261.03	SLV 2	1.39	Si
ini.	2	-4042	202.25	261.03	SLV 12	1.29	Si
fin.	2	-4227	-165.14	261.03	SLV 12	1.58	Si
ini.	2	-4436	156.68	261.03	SLV 8	1.67	Si
fin.	2	-4274	-223.82	261.03	SLV 8	1.17	Si
ini.	2	595	12.8	261.03	SLV 1	20.39	Si
fin.	2	1177	-187.53	261.03	SLV 1	1.39	Si
ini.	2	-1939	54.67	261.03	SLV 3	4.77	Si
fin.	2	-1364	-235.87	261.03	SLV 3	1.11	Si
ini.	2	-1939	54.67	261.03	SLV 4	4.77	Si
fin.	2	-1364	-235.87	261.03	SLV 4	1.11	Si

Verifiche a taglio delle travi in muratura secondo §C8.7.1.3.1 in combinazioni sismiche

Sezione	γM	N	M	V	Vt	Vp	Vt fess. diag.	Vt,lim	Comb.	c.s.	Verifica
ini.	2	-4042	202.25	-2068			1528	454	SLV 12	0.22	No
fin.	2	-4227	-165.14	-2267			1580	463	SLV 12	0.2	No
ini.	2	4011	17.13	1262			396	0	SLV 5	0	No
fin.	2	4196	-62.66	1285			396	0	SLV 5	0	No
ini.	2	-4042	202.25	-2068			1528	454	SLV 11	0.22	No
fin.	2	-4227	-165.14	-2267			1580	463	SLV 11	0.2	No
ini.	2	4405	62.7	1370			396	0	SLV 10	0	No
fin.	2	4243	-3.98	1269			396	0	SLV 10	0	No
ini.	2	4011	17.13	1262			396	0	SLV 6	0	No
fin.	2	4196	-62.66	1285			396	0	SLV 6	0	No

Sezione	γM	N	M	V	Vt	Vp	Vt fess. diag.	Vt,lim	Comb.	c.s.	Verifica
ini.	2	595	12.8	-68			396	0	SLV 2	0	No
fin.	2	1177	-187.53	66			396	0	SLV 2	0	No
ini.	2	595	12.8	-68			396	0	SLV 1	0	No
fin.	2	1177	-187.53	66			396	0	SLV 1	0	No
ini.	2	1908	164.72	293			396	0	SLV 14	0	No
fin.	2	1333	8.07	12			396	0	SLV 14	0	No
ini.	2	1908	164.72	293			396	0	SLV 13	0	No
fin.	2	1333	8.07	12			396	0	SLV 13	0	No
ini.	2	4405	62.7	1370			396	0	SLV 9	0	No
fin.	2	4243	-3.98	1269			396	0	SLV 9	0	No

Tabella dei coefficienti di sicurezza minimi

Stato limite	Coeff.s.	Comb.	Verifica
PF_SLV	1.107	SLV 3	Si
V_SLV	0	SLV 1	No
PF_SLU	0.629	SLU 79	No
V_SLU	0.057	SLU 71	No

Trave di accoppiamento 147

Verifiche condotte secondo D.M. 17-01-18 (N.T.C.)

Dati geometrici

X ini.	Y ini.	Z ini.inf.	Z ini.sup.	H ini.	X fin.	Y fin.	Z fin.inf.	Z fin.sup	H fin.	Luce	Spessore	R. Trazione
-17.275	-3.254	11.45	12.35	0.9	-18.275	-3.254	11.45	12.35	0.9	1	0.28	30000

Caratteristiche del materiale

(Circolare 7 21-01-19 C8.5.I) Muratura in mattoni pieni e malta di calce LC2_Corti

fb_	fhk	fvk0	fhmedio	τ0	fv0	μ	ϕ	fvk,lim	E	G	FC
120000			172500	9000	20000	0.577	0.767	6500	320000000	128000000	1.2

Verifiche a pressoflessione delle travi in muratura in combinazioni non sismiche

Sezione	γM	N	M	Mu	Comb.	c.s.	Verifica
ini.	3	50	-145.29	1150.68	SLU 81	7.92	Si
fin.	3	69	83.95	1150.68	SLU 81	13.71	Si
ini.	3	119	-119.14	1150.68	SLU 73	9.66	Si
fin.	3	152	40.76	1150.68	SLU 73	28.23	Si
ini.	3	95	-134.21	1150.68	SLU 82	8.57	Si
fin.	3	130	57.9	1150.68	SLU 82	19.87	Si
ini.	3	83	-131.22	1150.68	SLU 83	8.77	Si
fin.	3	202	59.52	1150.68	SLU 83	19.33	Si
ini.	3	128	-120.14	1150.68	SLU 84	9.58	Si
fin.	3	263	33.47	1150.68	SLU 84	34.38	Si
ini.	3	62	-133.93	1150.68	SLU 39	8.59	Si
fin.	3	79	68.52	1150.68	SLU 39	16.79	Si
ini.	3	69	-126.42	1150.68	SLU 74	9.1	Si
fin.	3	156	69.61	1150.68	SLU 74	16.53	Si
ini.	3	107	-122.85	1150.68	SLU 40	9.37	Si
fin.	3	140	42.46	1150.68	SLU 40	27.1	Si
ini.	3	95	-119.86	1150.68	SLU 41	9.6	Si
fin.	3	213	44.09	1150.68	SLU 41	26.1	Si
ini.	3	33	-119.69	1150.68	SLU 64	9.61	Si
fin.	3	7	84.73	1150.68	SLU 64	13.58	Si

Verifiche a taglio delle travi in muratura secondo §C8.7.1.3.1 in combinazioni non sismiche

Sezione	γM	N	M	V	Vt	Vp	Vt fess. diag.	Vt,lim	Comb.	c.s.	Verifica
ini.	3	51	-61.56	-50			873	319	SLU 48	6.35	Si
fin.	3	222	37.4	322			873	282	SLU 48	0.87	No
ini.	3	119	-119.14	377			873	304	SLU 73	0.81	No
fin.	3	152	40.76	94			873	298	SLU 73	3.15	Si
ini.	3	17	-75.63	66			873	325	SLU 45	4.9	Si
fin.	3	89	61.83	363			873	311	SLU 45	0.86	No
ini.	3	62	-133.93	431			873	316	SLU 39	0.73	No
fin.	3	79	68.52	108			873	313	SLU 39	2.89	Si
ini.	3	131	-107.78	365			873	302	SLU 31	0.83	No
fin.	3	162	25.33	8			873	295	SLU 31	38.1	Si
ini.	3	50	-145.29	443			873	319	SLU 81	0.72	No
fin.	3	69	83.95	195			873	315	SLU 81	1.61	Si
ini.	3	57	-108.5	183			873	317	SLU 66	1.74	Si
fin.	3	113	70.15	344			873	306	SLU 66	0.89	No
ini.	3	90	-94.43	66			873	311	SLU 69	4.71	Si
fin.	3	246	45.72	303			873	276	SLU 69	0.91	No
ini.	3	95	-134.21	429			873	310	SLU 82	0.72	No
fin.	3	130	57.9	109			873	302	SLU 82	2.76	Si
ini.	3	107	-122.85	418			873	307	SLU 40	0.74	No
fin.	3	140	42.46	23			873	300	SLU 40	13.12	Si

Verifiche a pressoflessione delle travi in muratura in combinazioni sismiche

Sezione	γM	N	M	Mu	Comb.	c.s.	Verifica
ini.	2	2791	-1738.52	1726.01	SLV 13	0.99	No
fin.	2	-2433	1136.77	1726.01	SLV 13	1.52	Si
ini.	2	3120	-1571.92	1726.01	SLV 15	1.1	Si
fin.	2	-2217	1048.99	1726.01	SLV 15	1.65	Si
ini.	2	-3080	1391.99	1726.01	SLV 2	1.24	Si
fin.	2	2242	-922.61	1726.01	SLV 2	1.87	Si
ini.	2	2791	-1738.52	1726.01	SLV 14	0.99	No
fin.	2	-2433	1136.77	1726.01	SLV 14	1.52	Si

Sezione	γM	N	M	Mu	Comb.	c.s.	Verifica
ini.	2	3120	-1571.92	1726.01	SLV 16	1.1	Si
fin.	2	-2217	1048.99	1726.01	SLV 16	1.65	Si
ini.	2	-2751	1558.59	1726.01	SLV 4	1.11	Si
fin.	2	2458	-1010.4	1726.01	SLV 4	1.71	Si
ini.	2	-2751	1558.59	1726.01	SLV 3	1.11	Si
fin.	2	2458	-1010.4	1726.01	SLV 3	1.71	Si
ini.	2	351	-837.21	1726.01	SLV 10	2.06	Si
fin.	2	-1048	518.4	1726.01	SLV 10	3.33	Si
ini.	2	351	-837.21	1726.01	SLV 9	2.06	Si
fin.	2	-1048	518.4	1726.01	SLV 9	3.33	Si
ini.	2	-3080	1391.99	1726.01	SLV 1	1.24	Si
fin.	2	2242	-922.61	1726.01	SLV 1	1.87	Si

Verifiche a taglio delle travi in muratura secondo §C8.7.1.3.1 in combinazioni sismiche

Sezione	γM	N	M	V	Vt	Vp	Vt fess. diag.	Vt,lim	Comb.	c.s.	Verifica
ini.	2	-2751	1558.59	-5588			2300	880	SLV 3	0.16	No
fin.	2	2458	-1010.4	-4114			1310	0	SLV 3	0	No
ini.	2	3120	-1571.92	4879			1310	0	SLV 16	0	No
fin.	2	-2217	1048.99	3940			2108	819	SLV 16	0.21	No
ini.	2	1450	-281.88	-156			1310	0	SLV 12	0	No
fin.	2	-329	225.79	373			1429	554	SLV 12	1.49	Si
ini.	2	3120	-1571.92	4879			1310	0	SLV 15	0	No
fin.	2	-2217	1048.99	3940			2108	819	SLV 15	0.21	No
ini.	2	2791	-1738.52	6055			1310	0	SLV 14	0	No
fin.	2	-2433	1136.77	4581			2186	844	SLV 14	0.18	No
ini.	2	-3080	1391.99	-4412			2419	915	SLV 2	0.21	No
fin.	2	2242	-922.61	-3472			1310	0	SLV 2	0	No
ini.	2	1450	-281.88	-156			1310	0	SLV 11	0	No
fin.	2	-329	225.79	373			1429	554	SLV 11	1.49	Si
ini.	2	-2751	1558.59	-5588			2300	880	SLV 4	0.16	No
fin.	2	2458	-1010.4	-4114			1310	0	SLV 4	0	No
ini.	2	-3080	1391.99	-4412			2419	915	SLV 1	0.21	No
fin.	2	2242	-922.61	-3472			1310	0	SLV 1	0	No
ini.	2	2791	-1738.52	6055			1310	0	SLV 13	0	No
fin.	2	-2433	1136.77	4581			2186	844	SLV 13	0.18	No

Tabella dei coefficienti di sicurezza minimi

Stato limite	Coeff.s.	Comb.	Verifica
PF_SLV	0.993	SLV 13	No
V_SLV	0	SLV 1	No
PF_SLU	7.92	SLU 81	Si
V_SLU	0.719	SLU 81	No

Trave di accoppiamento 148

Verifiche condotte secondo D.M. 17-01-18 (N.T.C.)

Dati geometrici

X ini.	Y ini.	Z ini.inf.	Z ini.sup.	H ini.	X fin.	Y fin.	Z fin.inf.	Z fin.sup	H fin.	Luce	Spessore	R. Trazione
-17.275	-3.254	14.25	14.6	0.35	-18.275	-3.254	14.25	14.6	0.35	1	0.28	30000

Caratteristiche del materiale

(Circolare 7 21-01-19 C8.5.I) Muratura in mattoni pieni e malta di calce LC2_Corti

fb_	fhk	fvk0	fhmedio	τ0	fv0	μ	ϕ	fvk,lim	E	G	FC
120000			172500	9000	20000	0.577	0.767	6500	320000000	128000000	1.2

Verifiche a pressoflessione delle travi in muratura in combinazioni non sismiche

Sezione	γM	N	M	Mu	Comb.	c.s.	Verifica
ini.	3	1493	46.91	174.02	SLU 78	3.71	Si
fin.	3	920	-132.71	174.02	SLU 78	1.31	Si
ini.	3	724	54.74	174.02	SLU 48	3.18	Si
fin.	3	391	-135.54	174.02	SLU 48	1.28	Si
ini.	3	932	67.99	174.02	SLU 79	2.56	Si
fin.	3	469	-143.41	174.02	SLU 79	1.21	Si
ini.	3	824	65.85	174.02	SLU 58	2.64	Si
fin.	3	406	-134.91	174.02	SLU 58	1.29	Si
ini.	3	741	65.66	174.02	SLU 50	2.65	Si
fin.	3	402	-130.78	174.02	SLU 50	1.33	Si
ini.	3	915	57.07	174.02	SLU 77	3.05	Si
fin.	3	458	-148.16	174.02	SLU 77	1.17	Si
ini.	3	820	53.12	174.02	SLU 35	3.28	Si
fin.	3	422	-131.9	174.02	SLU 35	1.32	Si
ini.	3	807	54.93	174.02	SLU 56	3.17	Si
fin.	3	395	-139.66	174.02	SLU 56	1.25	Si
ini.	3	832	56.88	174.02	SLU 69	3.06	Si
fin.	3	454	-144.03	174.02	SLU 69	1.21	Si
ini.	3	849	67.8	174.02	SLU 71	2.57	Si
fin.	3	466	-139.28	174.02	SLU 71	1.25	Si

Verifiche a taglio delle travi in muratura secondo §C8.7.1.3.1 in combinazioni non sismiche

Sezione	γM	N	M	V	Vt	Vp	Vt fess. diag.	Vt,lim	Comb.	c.s.	Verifica
ini.	3	1282	21.72	-40			252	0	SLU 54	0	No
fin.	3	770	-98.9	-605			252	0	SLU 54	0	No
ini.	3	705	31.89	-108			252	0	SLU 53	0	No
fin.	3	308	-114.35	-728			252	23	SLU 53	0.03	No
ini.	3	1401	55.69	-223			252	0	SLU 59	0	No
fin.	3	868	-119.46	-708			252	0	SLU 59	0	No

Sezione	γM	N	M	V	Vt	Vp	Vt fess. diag.	Vt,lim	Comb.	c.s.	Verifica
ini.	3	1684	25.87	-70			252	0	SLU 55	0	No
fin.	3	1089	-83.84	-484			252	0	SLU 55	0	No
ini.	3	807	54.93	-215			252	0	SLU 56	0	No
fin.	3	395	-139.66	-869			252	0	SLU 56	0	No
ini.	3	440	15.62	-50			252	0	SLU 1	0	No
fin.	3	192	-63.91	-423			252	61	SLU 1	0.14	No
ini.	3	654	19.85	-85			252	0	SLU 60	0	No
fin.	3	233	-86.06	-557			252	51	SLU 60	0.09	No
ini.	3	824	65.85	-291			252	0	SLU 58	0	No
fin.	3	406	-134.91	-831			252	0	SLU 58	0	No
ini.	3	1232	9.68	-17			252	0	SLU 61	0	No
fin.	3	695	-70.6	-434			252	0	SLU 61	0	No
ini.	3	1385	44.77	-147			252	0	SLU 57	0	No
fin.	3	857	-124.21	-746			252	0	SLU 57	0	No

Verifiche a pressoflessione delle travi in muratura in combinazioni sismiche

Sezione	γM	N	M	Mu	Comb.	c.s.	Verifica
ini.	2	1085	-669.19	261.03	SLV 9	0.39	No
fin.	2	4905	290.09	261.03	SLV 9	0.9	No
ini.	2	1085	-669.19	261.03	SLV 10	0.39	No
fin.	2	4905	290.09	261.03	SLV 10	0.9	No
ini.	2	-12	560.81	261.03	SLV 11	0.47	No
fin.	2	-4053	-271.37	261.03	SLV 11	0.96	No
ini.	2	191	435.72	261.03	SLV 3	0.6	No
fin.	2	-1848	-407.98	261.03	SLV 3	0.64	No
ini.	2	-12	560.81	261.03	SLV 12	0.47	No
fin.	2	-4053	-271.37	261.03	SLV 12	0.96	No
ini.	2	-95	701.76	261.03	SLV 8	0.37	No
fin.	2	-4483	-425.12	261.03	SLV 8	0.61	No
ini.	2	191	435.72	261.03	SLV 4	0.6	No
fin.	2	-1848	-407.98	261.03	SLV 4	0.64	No
ini.	2	-95	701.76	261.03	SLV 7	0.37	No
fin.	2	-4483	-425.12	261.03	SLV 7	0.61	No
ini.	2	1001	-528.23	261.03	SLV 6	0.49	No
fin.	2	4475	136.34	261.03	SLV 6	1.91	Si
ini.	2	1001	-528.23	261.03	SLV 5	0.49	No
fin.	2	4475	136.34	261.03	SLV 5	1.91	Si

Verifiche a taglio delle travi in muratura secondo §C8.7.1.3.1 in combinazioni sismiche

Sezione	γM	N	M	V	Vt	Vp	Vt fess. diag.	Vt,lim	Comb.	c.s.	Verifica
ini.	2	1001	-528.23	1840			377	0	SLV 5	0	No
fin.	2	4475	136.34	877			377	0	SLV 5	0	No
ini.	2	1001	-528.23	1840			377	0	SLV 6	0	No
fin.	2	4475	136.34	877			377	0	SLV 6	0	No
ini.	2	1085	-669.19	3015			377	0	SLV 10	0	No
fin.	2	4905	290.09	1149			377	0	SLV 10	0	No
ini.	2	520	66.72	-1275			377	0	SLV 1	0	No
fin.	2	839	-239.55	-460			377	0	SLV 1	0	No
ini.	2	520	66.72	-1275			377	0	SLV 2	0	No
fin.	2	839	-239.55	-460			377	0	SLV 2	0	No
ini.	2	470	-34.14	1147			377	29	SLV 16	0.03	No
fin.	2	-417	104.52	-429			489	193	SLV 16	0.45	No
ini.	2	470	-34.14	1147			377	29	SLV 15	0.03	No
fin.	2	-417	104.52	-429			489	193	SLV 15	0.45	No
ini.	2	799	-403.14	2642			377	0	SLV 14	0	No
fin.	2	2271	272.96	446			377	0	SLV 14	0	No
ini.	2	1085	-669.19	3015			377	0	SLV 9	0	No
fin.	2	4905	290.09	1149			377	0	SLV 9	0	No
ini.	2	799	-403.14	2642			377	0	SLV 13	0	No
fin.	2	2271	272.96	446			377	0	SLV 13	0	No

Tabella dei coefficienti di sicurezza minimi

Stato limite	Coeff.s.	Comb.	Verifica
PF_SLV	0.372	SLV 7	No
V_SLV	0	SLV 1	No
PF_SLU	1.175	SLU 77	Si
V_SLU	0	SLU 1	No

Trave di accoppiamento 149

Verifiche condotte secondo D.M. 17-01-18 (N.T.C.)

Dati geometrici

X ini.	Y ini.	Z ini.inf.	Z ini.sup.	H ini.	X fin.	Y fin.	Z fin.inf.	Z fin.sup	H fin.	Luce	Spessore	R. Trazione
-19.595	1.283	13.55	14.6	1.05	-19.595	1.983	13.55	14.6	1.05	0.7	0.14	30000

Caratteristiche del materiale

(Circolare 7 21-01-19 C8.5.I) Muratura in mattoni pieni e malta di calce LC2_Corti

fb_	fhk	fvk0	fhmedio	τ0	fv0	μ	ϕ	fvk,lim	E	G	FC
120000			172500	9000	20000	0.577	0.767	6500	320000000	128000000	1.2

Verifiche a pressoflessione delle travi in muratura in combinazioni non sismiche

Sezione	γM	N	M	Mu	Comb.	c.s.	Verifica
ini.	3	87	-117.16	783.1	SLU 36	6.68	Si
fin.	3	87	-762.86	783.1	SLU 36	1.03	Si
ini.	3	79	-124.46	783.1	SLU 56	6.29	Si
fin.	3	79	-740.84	783.1	SLU 56	1.06	Si

Sezione	γM	N	M	Mu	Comb.	c.s.	Verifica
ini.	3	93	-129.96	783.1	SLU 77	6.03	Si
fin.	3	93	-836.2	783.1	SLU 77	0.94	No
ini.	3	73	-132.33	783.1	SLU 69	5.92	Si
fin.	3	73	-739.96	783.1	SLU 69	1.06	Si
ini.	3	88	-124.8	783.1	SLU 79	6.28	Si
fin.	3	88	-800.61	783.1	SLU 79	0.98	No
ini.	3	94	-131.91	783.1	SLU 78	5.94	Si
fin.	3	94	-833.16	783.1	SLU 78	0.94	No
ini.	3	90	-126.74	783.1	SLU 80	6.18	Si
fin.	3	90	-797.56	783.1	SLU 80	0.98	No
ini.	3	85	-115.22	783.1	SLU 35	6.8	Si
fin.	3	85	-765.9	783.1	SLU 35	1.02	Si
ini.	3	92	-98.05	783.1	SLU 83	7.99	Si
fin.	3	92	-744.17	783.1	SLU 83	1.05	Si
ini.	3	94	-99.99	783.1	SLU 84	7.83	Si
fin.	3	94	-741.13	783.1	SLU 84	1.06	Si

Verifiche a taglio delle travi in muratura secondo §C8.7.1.3.1 in combinazioni non sismiche

Sezione	γM	N	M	V	Vt	Vp	Vt fess. diag.	Vt,lim	Comb.	c.s.	Verifica
ini.	3	94	-131.91	-911			566	191	SLU 78	0.21	No
fin.	3	94	-833.16	-1120			566	191	SLU 78	0.17	No
ini.	3	93	-129.96	-919			566	192	SLU 77	0.21	No
fin.	3	93	-836.2	-1127			566	192	SLU 77	0.17	No
ini.	3	88	-104.23	-816			566	193	SLU 74	0.24	No
fin.	3	88	-738.53	-1024			566	193	SLU 74	0.19	No
ini.	3	94	-99.99	-826			566	192	SLU 84	0.23	No
fin.	3	94	-741.13	-1034			566	192	SLU 84	0.19	No
ini.	3	87	-117.16	-850			566	193	SLU 36	0.23	No
fin.	3	87	-762.86	-1017			566	193	SLU 36	0.19	No
ini.	3	85	-115.22	-857			566	194	SLU 35	0.23	No
fin.	3	85	-765.9	-1024			566	194	SLU 35	0.19	No
ini.	3	90	-126.74	-868			566	192	SLU 80	0.22	No
fin.	3	90	-797.56	-1077			566	192	SLU 80	0.18	No
ini.	3	90	-106.17	-809			566	193	SLU 75	0.24	No
fin.	3	90	-735.48	-1017			566	193	SLU 75	0.19	No
ini.	3	92	-98.05	-833			566	192	SLU 83	0.23	No
fin.	3	92	-744.17	-1041			566	192	SLU 83	0.18	No
ini.	3	88	-124.8	-875			566	193	SLU 79	0.22	No
fin.	3	88	-800.61	-1084			566	193	SLU 79	0.18	No

Verifiche a pressoflessione delle travi in muratura in combinazioni sismiche

Sezione	γM	N	M	Mu	Comb.	c.s.	Verifica
ini.	2	842	-11.2	1174.65	SLV 5	104.85	Si
fin.	2	809	1545.1	1174.65	SLV 5	0.76	No
ini.	2	-1004	-207.07	1174.65	SLV 7	5.67	Si
fin.	2	-831	-2801.23	1174.65	SLV 7	0.42	No
ini.	2	-745	-101.49	1174.65	SLV 11	11.57	Si
fin.	2	-711	-2341.26	1174.65	SLV 11	0.5	No
ini.	2	-661	-261.69	1174.65	SLV 4	4.49	Si
fin.	2	-397	-1816.65	1174.65	SLV 4	0.65	No
ini.	2	-1004	-207.07	1174.65	SLV 8	5.67	Si
fin.	2	-831	-2801.23	1174.65	SLV 8	0.42	No
ini.	2	-661	-261.69	1174.65	SLV 3	4.49	Si
fin.	2	-397	-1816.65	1174.65	SLV 3	0.65	No
ini.	2	1102	94.38	1174.65	SLV 9	12.45	Si
fin.	2	928	2005.07	1174.65	SLV 9	0.59	No
ini.	2	-745	-101.49	1174.65	SLV 12	11.57	Si
fin.	2	-711	-2341.26	1174.65	SLV 12	0.5	No
ini.	2	1102	94.38	1174.65	SLV 10	12.45	Si
fin.	2	928	2005.07	1174.65	SLV 10	0.59	No
ini.	2	842	-11.2	1174.65	SLV 6	104.85	Si
fin.	2	809	1545.1	1174.65	SLV 6	0.76	No

Verifiche a taglio delle travi in muratura secondo §C8.7.1.3.1 in combinazioni sismiche

Sezione	γM	N	M	V	Vt	Vp	Vt fess. diag.	Vt,lim	Comb.	c.s.	Verifica
ini.	2	-1004	-207.07	-3834			1251	492	SLV 8	0.13	No
fin.	2	-831	-2801.23	-3979			1182	466	SLV 8	0.12	No
ini.	2	842	-11.2	2504			849	0	SLV 5	0	No
fin.	2	809	1545.1	2255			849	0	SLV 5	0	No
ini.	2	842	-11.2	2504			849	0	SLV 6	0	No
fin.	2	809	1545.1	2255			849	0	SLV 6	0	No
ini.	2	-745	-101.49	-3344			1147	453	SLV 12	0.14	No
fin.	2	-711	-2341.26	-3410			1134	448	SLV 12	0.13	No
ini.	2	1102	94.38	2994			849	0	SLV 9	0	No
fin.	2	928	2005.07	2823			849	0	SLV 9	0	No
ini.	2	-745	-101.49	-3344			1147	453	SLV 11	0.14	No
fin.	2	-711	-2341.26	-3410			1134	448	SLV 11	0.13	No
ini.	2	758	149	1346			849	0	SLV 14	0	No
fin.	2	494	1020.49	1305			849	183	SLV 14	0.14	No
ini.	2	758	149	1346			849	0	SLV 13	0	No
fin.	2	494	1020.49	1305			849	183	SLV 13	0.14	No
ini.	2	1102	94.38	2994			849	0	SLV 10	0	No
fin.	2	928	2005.07	2823			849	0	SLV 10	0	No
ini.	2	-1004	-207.07	-3834			1251	492	SLV 7	0.13	No
fin.	2	-831	-2801.23	-3979			1182	466	SLV 7	0.12	No

Tabella dei coefficienti di sicurezza minimi

Stato limite	Coeff.s.	Comb.	Verifica
PF_SLV	0.419	SLV 7	No
V_SLV	0	SLV 5	No

Stato limite	Coeff.s.	Comb.	Verifica
PF_SLU	0.936	SLU 77	No
V_SLU	0.17	SLU 77	No

Trave di accoppiamento 150

Verifiche condotte secondo D.M. 17-01-18 (N.T.C.)

Dati geometrici

X ini.	Y ini.	Z ini.inf.	Z ini.sup.	H ini.	X fin.	Y fin.	Z fin.inf.	Z fin.sup	H fin.	Luce	Spessore	R. Trazione
-18.448	0.055	13.55	14.6	1.05	-18.448	0.855	13.55	14.6	1.05	0.8	0.14	30000

Caratteristiche del materiale

(Circolare 7 21-01-19 C8.5.I) Muratura in mattoni pieni e malta di calce LC2_Corti

fb_	fhk	fvk0	fhmedio	τ0	fv0	μ	ϕ	fvk,lim	E	G	FC
120000			172500	9000	20000	0.577	0.767	6500	320000000	128000000	1.2

Verifiche a pressoflessione delle travi in muratura in combinazioni non sismiche

Sezione	γM	N	M	Mu	Comb.	c.s.	Verifica
ini.	3	42	-683.47	783.1	SLU 36	1.15	Si
fin.	3	42	-62.17	783.1	SLU 36	12.6	Si
ini.	3	36	-704.86	783.1	SLU 69	1.11	Si
fin.	3	36	-71.42	783.1	SLU 69	10.96	Si
ini.	3	39	-717.45	783.1	SLU 79	1.09	Si
fin.	3	39	-61.66	783.1	SLU 79	12.7	Si
ini.	3	41	-689.27	783.1	SLU 72	1.14	Si
fin.	3	41	-70.65	783.1	SLU 72	11.08	Si
ini.	3	48	-766.19	783.1	SLU 78	1.02	Si
fin.	3	48	-70.31	783.1	SLU 78	11.14	Si
ini.	3	46	-734.03	783.1	SLU 80	1.07	Si
fin.	3	46	-65.59	783.1	SLU 80	11.94	Si
ini.	3	46	-706.58	783.1	SLU 57	1.11	Si
fin.	3	46	-70.08	783.1	SLU 57	11.17	Si
ini.	3	41	-749.62	783.1	SLU 77	1.04	Si
fin.	3	41	-66.37	783.1	SLU 77	11.8	Si
ini.	3	43	-721.44	783.1	SLU 70	1.09	Si
fin.	3	43	-75.36	783.1	SLU 70	10.39	Si
ini.	3	39	-690	783.1	SLU 56	1.13	Si
fin.	3	39	-66.14	783.1	SLU 56	11.84	Si

Verifiche a taglio delle travi in muratura secondo §C8.7.1.3.1 in combinazioni non sismiche

Sezione	γM	N	M	V	Vt	Vp	Vt fess. diag.	Vt,lim	Comb.	c.s.	Verifica
ini.	3	41	-749.62	1037			566	204	SLU 77	0.2	No
fin.	3	41	-66.37	744			566	204	SLU 77	0.27	No
ini.	3	46	-706.58	973			566	203	SLU 57	0.21	No
fin.	3	46	-70.08	693			566	203	SLU 57	0.29	No
ini.	3	48	-766.19	1053			566	202	SLU 78	0.19	No
fin.	3	48	-70.31	760			566	202	SLU 78	0.27	No
ini.	3	36	-704.86	974			566	205	SLU 69	0.21	No
fin.	3	36	-71.42	682			566	205	SLU 69	0.3	No
ini.	3	49	-659.96	948			566	202	SLU 84	0.21	No
fin.	3	49	-47.95	655			566	202	SLU 84	0.31	No
ini.	3	43	-721.44	990			566	204	SLU 70	0.21	No
fin.	3	43	-75.36	698			566	204	SLU 70	0.29	No
ini.	3	39	-717.45	1002			566	204	SLU 79	0.2	No
fin.	3	39	-61.66	710			566	204	SLU 79	0.29	No
ini.	3	49	-672.95	955			566	202	SLU 75	0.21	No
fin.	3	49	-54.83	663			566	202	SLU 75	0.3	No
ini.	3	41	-689.27	956			566	204	SLU 72	0.21	No
fin.	3	41	-70.65	664			566	204	SLU 72	0.31	No
ini.	3	46	-734.03	1018			566	203	SLU 80	0.2	No
fin.	3	46	-65.59	726			566	203	SLU 80	0.28	No

Verifiche a pressoflessione delle travi in muratura in combinazioni sismiche

Sezione	γM	N	M	Mu	Comb.	c.s.	Verifica
ini.	2	-1130	-1880.18	1174.65	SLV 9	0.62	No
fin.	2	-1644	72.34	1174.65	SLV 9	16.24	Si
ini.	2	-843	-1613.11	1174.65	SLV 5	0.73	No
fin.	2	-1414	159.75	1174.65	SLV 5	7.35	Si
ini.	2	-1130	-1880.18	1174.65	SLV 10	0.62	No
fin.	2	-1644	72.34	1174.65	SLV 10	16.24	Si
ini.	2	1185	1132.8	1174.65	SLV 8	1.04	Si
fin.	2	1699	-124.37	1174.65	SLV 8	9.44	Si
ini.	2	898	865.73	1174.65	SLV 11	1.36	Si
fin.	2	1469	-211.78	1174.65	SLV 11	5.55	Si
ini.	2	898	865.73	1174.65	SLV 12	1.36	Si
fin.	2	1469	-211.78	1174.65	SLV 12	5.55	Si
ini.	2	-843	-1613.11	1174.65	SLV 6	0.73	No
fin.	2	-1414	159.75	1174.65	SLV 6	7.35	Si
ini.	2	-756	-1230.71	1174.65	SLV 13	0.95	No
fin.	2	-822	-129.08	1174.65	SLV 13	9.1	Si
ini.	2	1185	1132.8	1174.65	SLV 7	1.04	Si
fin.	2	1699	-124.37	1174.65	SLV 7	9.44	Si
ini.	2	-756	-1230.71	1174.65	SLV 14	0.95	No
fin.	2	-822	-129.08	1174.65	SLV 14	9.1	Si

Verifiche a taglio delle travi in muratura secondo §C8.7.1.3.1 in combinazioni sismiche

Sezione	γM	N	M	V	Vt	Vp	Vt fess. diag.	Vt,lim	Comb.	c.s.	Verifica
ini.	2	-843	-1613.11	2238			1186	468	SLV 6	0.21	No
fin.	2	-1414	159.75	1994			1415	546	SLV 6	0.27	No
ini.	2	1185	1132.8	-1199			849	0	SLV 8	0	No
fin.	2	1699	-124.37	-1381			849	0	SLV 8	0	No
ini.	2	-1130	-1880.18	2346			1301	509	SLV 9	0.22	No
fin.	2	-1644	72.34	2084			1507	575	SLV 9	0.28	No
ini.	2	811	483.33	-122			849	0	SLV 3	0	No
fin.	2	877	77.05	-305			849	0	SLV 3	0	No
ini.	2	898	865.73	-1090			849	0	SLV 11	0	No
fin.	2	1469	-211.78	-1291			849	0	SLV 11	0	No
ini.	2	898	865.73	-1090			849	0	SLV 12	0	No
fin.	2	1469	-211.78	-1291			849	0	SLV 12	0	No
ini.	2	-843	-1613.11	2238			1186	468	SLV 5	0.21	No
fin.	2	-1414	159.75	1994			1415	546	SLV 5	0.27	No
ini.	2	1185	1132.8	-1199			849	0	SLV 7	0	No
fin.	2	1699	-124.37	-1381			849	0	SLV 7	0	No
ini.	2	-1130	-1880.18	2346			1301	509	SLV 10	0.22	No
fin.	2	-1644	72.34	2084			1507	575	SLV 10	0.28	No
ini.	2	811	483.33	-122			849	0	SLV 4	0	No
fin.	2	877	77.05	-305			849	0	SLV 4	0	No

Tabella dei coefficienti di sicurezza minimi

Stato limite	Coeff.s.	Comb.	Verifica
PF_SLV	0.625	SLV 9	No
V_SLV	0	SLV 3	No
PF_SLU	1.022	SLU 78	Si
V_SLU	0.192	SLU 78	No

Trave di accoppiamento 151

Verifiche condotte secondo D.M. 17-01-18 (N.T.C.)

Dati geometrici

X ini.	Y ini.	Z ini.inf.	Z ini.sup.	H ini.	X fin.	Y fin.	Z fin.inf.	Z fin.sup	H fin.	Luce	Spessore	R. Trazione
-15.3	-3.254	13.55	14.6	1.05	-16.2	-3.254	13.55	14.6	1.05	0.9	0.28	30000

Caratteristiche del materiale

(Circolare 7 21-01-19 C8.5.I) Muratura in mattoni pieni e malta di calce LC2_Corti

fb_	fhk	fvk0	fhmedio	τ0	fv0	μ	ϕ	fvk,lim	E	G	FC
120000			172500	9000	20000	0.577	0.767	6500	320000000	128000000	1.2

Verifiche a pressoflessione delle travi in muratura in combinazioni non sismiche

Sezione	γM	N	M	Mu	Comb.	c.s.	Verifica
ini.	3	171	-586.22	1566.2	SLU 80	2.67	Si
fin.	3	1132	456.22	1566.2	SLU 80	3.43	Si
ini.	3	10	-584.19	1566.2	SLU 82	2.68	Si
fin.	3	949	495.54	1566.2	SLU 82	3.16	Si
ini.	3	67	-622.03	1566.2	SLU 79	2.52	Si
fin.	3	961	488.57	1566.2	SLU 79	3.21	Si
ini.	3	-28	-637.86	1566.2	SLU 83	2.46	Si
fin.	3	879	523.43	1566.2	SLU 83	2.99	Si
ini.	3	-10	-635.12	1566.2	SLU 77	2.47	Si
fin.	3	919	500.69	1566.2	SLU 77	3.13	Si
ini.	3	-94	-620	1566.2	SLU 81	2.53	Si
fin.	3	778	527.89	1566.2	SLU 81	2.97	Si
ini.	3	-75	-617.26	1566.2	SLU 74	2.54	Si
fin.	3	817	505.15	1566.2	SLU 74	3.1	Si
ini.	3	75	-602.05	1566.2	SLU 84	2.6	Si
fin.	3	1051	491.08	1566.2	SLU 84	3.19	Si
ini.	3	94	-599.3	1566.2	SLU 78	2.61	Si
fin.	3	1090	468.34	1566.2	SLU 78	3.34	Si
ini.	3	29	-581.44	1566.2	SLU 75	2.69	Si
fin.	3	989	472.8	1566.2	SLU 75	3.31	Si

Verifiche a taglio delle travi in muratura secondo §C8.7.1.3.1 in combinazioni non sismiche

Sezione	γM	N	M	V	Vt	Vp	Vt fess. diag.	Vt,lim	Comb.	c.s.	Verifica
ini.	3	245	-465.87	1984			1132	369	SLU 68	0.19	No
fin.	3	1099	368.17	874			1132	0	SLU 68	0	No
ini.	3	222	-437.81	1825			1132	375	SLU 30	0.21	No
fin.	3	980	326.5	848			1132	0	SLU 30	0	No
ini.	3	152	-516.42	2057			1132	392	SLU 38	0.19	No
fin.	3	1026	397.44	1080			1132	0	SLU 38	0	No
ini.	3	75	-529.5	2165			1132	409	SLU 36	0.19	No
fin.	3	984	409.56	1057			1132	0	SLU 36	0	No
ini.	3	206	-490.44	2025			1132	379	SLU 59	0.19	No
fin.	3	1014	376.05	900			1132	0	SLU 59	0	No
ini.	3	180	-448.01	1878			1132	385	SLU 65	0.2	No
fin.	3	998	372.63	848			1132	0	SLU 65	0	No
ini.	3	280	-370.09	1663			1132	360	SLU 47	0.22	No
fin.	3	981	288	610			1132	0	SLU 47	0	No
ini.	3	75	-602.05	2340			1132	409	SLU 84	0.17	No
fin.	3	1051	491.08	1239			1132	0	SLU 84	0	No
ini.	3	210	-448.7	1895			1132	378	SLU 55	0.2	No
fin.	3	1027	358.94	842			1132	0	SLU 55	0	No
ini.	3	156	-474.68	1928			1132	391	SLU 34	0.2	No

Sezione	γM	N	M	V	Vt	Vp	Vt fess. diag.	Vt,lim	Comb.	c.s.	Verifica
fin.	3	1039	380.33	1022			1132	0	SLU 34	0	No

Verifiche a pressoflessione delle travi in muratura in combinazioni sismiche

Sezione	γM	N	M	Mu	Comb.	c.s.	Verifica
ini.	2	-2786	-534.38	2349.3	SLV 6	4.4	Si
fin.	2	-4197	1478.55	2349.3	SLV 6	1.59	Si
ini.	2	-2786	-534.38	2349.3	SLV 5	4.4	Si
fin.	2	-4197	1478.55	2349.3	SLV 5	1.59	Si
ini.	2	-1882	-1270.2	2349.3	SLV 9	1.85	Si
fin.	2	-2080	2292.91	2349.3	SLV 9	1.02	Si
ini.	2	-1882	-1270.2	2349.3	SLV 10	1.85	Si
fin.	2	-2080	2292.91	2349.3	SLV 10	1.02	Si
ini.	2	1868	486.3	2349.3	SLV 7	4.83	Si
fin.	2	3150	-1631.4	2349.3	SLV 7	1.44	Si
ini.	2	802	-1771.42	2349.3	SLV 13	1.33	Si
fin.	2	2960	2154.52	2349.3	SLV 13	1.09	Si
ini.	2	-815	987.52	2349.3	SLV 3	2.38	Si
fin.	2	-1890	-1493.01	2349.3	SLV 3	1.57	Si
ini.	2	-815	987.52	2349.3	SLV 4	2.38	Si
fin.	2	-1890	-1493.01	2349.3	SLV 4	1.57	Si
ini.	2	1868	486.3	2349.3	SLV 8	4.83	Si
fin.	2	3150	-1631.4	2349.3	SLV 8	1.44	Si
ini.	2	802	-1771.42	2349.3	SLV 14	1.33	Si
fin.	2	2960	2154.52	2349.3	SLV 14	1.09	Si

Verifiche a taglio delle travi in muratura secondo §C8.7.1.3.1 in combinazioni sismiche

Sezione	γM	N	M	V	Vt	Vp	Vt fess. diag.	Vt,lim	Comb.	c.s.	Verifica
ini.	2	-1882	-1270.2	3918			2451	965	SLV 9	0.25	No
fin.	2	-2080	2292.91	2515			2530	993	SLV 9	0.39	No
ini.	2	2772	-249.52	1522			1698	0	SLV 11	0	No
fin.	2	5266	-817.03	1380			1698	0	SLV 11	0	No
ini.	2	2772	-249.52	1522			1698	0	SLV 12	0	No
fin.	2	5266	-817.03	1380			1698	0	SLV 12	0	No
ini.	2	2198	-1465.21	5238			1698	0	SLV 16	0	No
fin.	2	5164	1221.54	4632			1698	0	SLV 16	0	No
ini.	2	1868	486.3	-944			1698	0	SLV 8	0	No
fin.	2	3150	-1631.4	-1066			1698	0	SLV 8	0	No
ini.	2	802	-1771.42	5956			1698	431	SLV 13	0.07	No
fin.	2	2960	2154.52	4972			1698	0	SLV 13	0	No
ini.	2	2198	-1465.21	5238			1698	0	SLV 15	0	No
fin.	2	5164	1221.54	4632			1698	0	SLV 15	0	No
ini.	2	-1882	-1270.2	3918			2451	965	SLV 10	0.25	No
fin.	2	-2080	2292.91	2515			2530	993	SLV 10	0.39	No
ini.	2	802	-1771.42	5956			1698	431	SLV 14	0.07	No
fin.	2	2960	2154.52	4972			1698	0	SLV 14	0	No
ini.	2	1868	486.3	-944			1698	0	SLV 7	0	No
fin.	2	3150	-1631.4	-1066			1698	0	SLV 7	0	No

Tabella dei coefficienti di sicurezza minimi

Stato limite	Coeff.s.	Comb.	Verifica
PF_SLV	1.025	SLV 9	Si
V_SLV	0	SLV 7	No
PF_SLU	2.455	SLU 83	Si
V_SLU	0	SLU 26	No

Trave di accoppiamento 152

Verifiche condotte secondo D.M. 17-01-18 (N.T.C.)

Dati geometrici

X ini.	Y ini.	Z ini.inf.	Z ini.sup.	H ini.	X fin.	Y fin.	Z fin.inf.	Z fin.sup	H fin.	Luce	Spessore	R. Trazione
-18.643	1.046	13.55	14.6	1.05	-19.443	1.046	13.55	14.6	1.05	0.8	0.28	30000

Caratteristiche del materiale

(Circolare 7 21-01-19 C8.5.I) Muratura in mattoni pieni e malta di calce LC2_Corti

fb_	fhk	fvk0	fhmedio	τ0	fv0	μ	ϕ	fvk,lim	E	G	FC
120000			172500	9000	20000	0.577	0.767	6500	320000000	128000000	1.2

Verifiche a pressoflessione delle travi in muratura in combinazioni non sismiche

Sezione	γM	N	M	Mu	Comb.	c.s.	Verifica
ini.	3	-1829	20.68	1566.2	SLU 50	75.74	Si
fin.	3	-1097	161.93	1566.2	SLU 50	9.67	Si
ini.	3	-2232	-30.06	1566.2	SLU 30	52.1	Si
fin.	3	-1593	139.27	1566.2	SLU 30	11.25	Si
ini.	3	-2409	-23.88	1566.2	SLU 70	65.59	Si
fin.	3	-1774	139.6	1566.2	SLU 70	11.22	Si
ini.	3	-1886	9.23	1566.2	SLU 49	169.72	Si
fin.	3	-1202	150.37	1566.2	SLU 49	10.42	Si
ini.	3	-1824	17.13	1566.2	SLU 51	91.41	Si
fin.	3	-1080	166.02	1566.2	SLU 51	9.43	Si
ini.	3	-2346	-15.97	1566.2	SLU 72	98.05	Si
fin.	3	-1652	155.25	1566.2	SLU 72	10.09	Si
ini.	3	-1714	6.59	1566.2	SLU 8	237.66	Si
fin.	3	-1038	145.96	1566.2	SLU 8	10.73	Si
ini.	3	-2351	-12.43	1566.2	SLU 71	126.01	Si
fin.	3	-1668	151.16	1566.2	SLU 71	10.36	Si
ini.	3	-1891	12.77	1566.2	SLU 48	122.63	Si

Sezione	γM	N	M	Mu	Comb.	c.s.	Verifica
fin.	3	-1219	146.28	1566.2	SLU 48	10.71	Si
ini.	3	-1709	3.05	1566.2	SLU 9	514.18	Si
fin.	3	-1022	150.04	1566.2	SLU 9	10.44	Si

Verifiche a taglio delle travi in muratura secondo §C8.7.1.3.1 in combinazioni non sismiche

Sezione	γM	N	M	V	Vt	Vp	Vt fess. diag.	Vt,lim	Comb.	c.s.	Verifica
ini.	3	-1829	20.68	3001			1864	721	SLU 50	0.24	No
fin.	3	-1097	161.93	-1658			1571	620	SLU 50	0.37	No
ini.	3	-2346	-15.97	3166			2071	785	SLU 72	0.25	No
fin.	3	-1652	155.25	-1799			1793	698	SLU 72	0.39	No
ini.	3	-1891	12.77	3029			1889	729	SLU 48	0.24	No
fin.	3	-1219	146.28	-1767			1620	638	SLU 48	0.36	No
ini.	3	-1772	-4.86	2685			1841	714	SLU 7	0.27	No
fin.	3	-1144	134.4	-1478			1590	627	SLU 7	0.42	No
ini.	3	-1824	17.13	3022			1862	721	SLU 51	0.24	No
fin.	3	-1080	166.02	-1642			1564	618	SLU 51	0.38	No
ini.	3	-1709	3.05	2657			1816	706	SLU 9	0.27	No
fin.	3	-1022	150.04	-1369			1541	609	SLU 9	0.44	No
ini.	3	-2414	-20.34	3173			2098	793	SLU 69	0.25	No
fin.	3	-1790	135.51	-1925			1848	716	SLU 69	0.37	No
ini.	3	-2351	-12.43	3144			2073	786	SLU 71	0.25	No
fin.	3	-1668	151.16	-1816			1799	700	SLU 71	0.39	No
ini.	3	-2409	-23.88	3195			2096	792	SLU 70	0.25	No
fin.	3	-1774	139.6	-1908			1842	714	SLU 70	0.37	No
ini.	3	-1886	9.23	3051			1887	729	SLU 49	0.24	No
fin.	3	-1202	150.37	-1751			1613	636	SLU 49	0.36	No

Verifiche a pressoflessione delle travi in muratura in combinazioni sismiche

Sezione	γM	N	M	Mu	Comb.	c.s.	Verifica
ini.	2	-2390	-815.47	2349.3	SLV 10	2.88	Si
fin.	2	272	794.69	2349.3	SLV 10	2.96	Si
ini.	2	-213	835.9	2349.3	SLV 3	2.81	Si
fin.	2	-2666	-875.73	2349.3	SLV 3	2.68	Si
ini.	2	-1738	-488.72	2349.3	SLV 15	4.81	Si
fin.	2	-357	605.28	2349.3	SLV 15	3.88	Si
ini.	2	-108	797.87	2349.3	SLV 7	2.94	Si
fin.	2	-2632	-738.49	2349.3	SLV 7	3.18	Si
ini.	2	-108	797.87	2349.3	SLV 8	2.94	Si
fin.	2	-2632	-738.49	2349.3	SLV 8	3.18	Si
ini.	2	-213	835.9	2349.3	SLV 4	2.81	Si
fin.	2	-2666	-875.73	2349.3	SLV 4	2.68	Si
ini.	2	-1738	-488.72	2349.3	SLV 16	4.81	Si
fin.	2	-357	605.28	2349.3	SLV 16	3.88	Si
ini.	2	-2286	-853.5	2349.3	SLV 13	2.75	Si
fin.	2	306	931.94	2349.3	SLV 13	2.52	Si
ini.	2	-2286	-853.5	2349.3	SLV 14	2.75	Si
fin.	2	306	931.94	2349.3	SLV 14	2.52	Si
ini.	2	-2390	-815.47	2349.3	SLV 9	2.88	Si
fin.	2	272	794.69	2349.3	SLV 9	2.96	Si

Verifiche a taglio delle travi in muratura secondo §C8.7.1.3.1 in combinazioni sismiche

Sezione	γM	N	M	V	Vt	Vp	Vt fess. diag.	Vt,lim	Comb.	c.s.	Verifica
ini.	2	-2390	-815.47	5040			2654	1036	SLV 9	0.21	No
fin.	2	272	794.69	2960			1698	577	SLV 9	0.19	No
ini.	2	-2286	-853.5	5328			2613	1022	SLV 14	0.19	No
fin.	2	306	931.94	2793			1698	569	SLV 14	0.2	No
ini.	2	-213	835.9	-2553			1784	684	SLV 4	0.27	No
fin.	2	-2666	-875.73	-5125			2765	1072	SLV 4	0.21	No
ini.	2	-108	797.87	-2265			1742	662	SLV 8	0.29	No
fin.	2	-2632	-738.49	-5291			2751	1068	SLV 8	0.2	No
ini.	2	-2286	-853.5	5328			2613	1022	SLV 13	0.19	No
fin.	2	306	931.94	2793			1698	569	SLV 13	0.2	No
ini.	2	-108	797.87	-2265			1742	662	SLV 7	0.29	No
fin.	2	-2632	-738.49	-5291			2751	1068	SLV 7	0.2	No
ini.	2	-2390	-815.47	5040			2654	1036	SLV 10	0.21	No
fin.	2	272	794.69	2960			1698	577	SLV 10	0.19	No
ini.	2	-213	835.9	-2553			1784	684	SLV 3	0.27	No
fin.	2	-2666	-875.73	-5125			2765	1072	SLV 3	0.21	No
ini.	2	-1738	-488.72	3699			2394	944	SLV 15	0.26	No
fin.	2	-357	605.28	856			1841	713	SLV 15	0.83	No
ini.	2	-1738	-488.72	3699			2394	944	SLV 16	0.26	No
fin.	2	-357	605.28	856			1841	713	SLV 16	0.83	No

Tabella dei coefficienti di sicurezza minimi

Stato limite	Coeff.s.	Comb.	Verifica
PF_SLV	2.521	SLV 13	Si
V_SLV	0.192	SLV 13	No
PF_SLU	9.434	SLU 51	Si
V_SLU	0.238	SLU 51	No

Trave di accoppiamento 153

Verifiche condotte secondo D.M. 17-01-18 (N.T.C.)

Dati geometrici

X ini.	Y ini.	Z ini.inf.	Z ini.sup.	H ini.	X fin.	Y fin.	Z fin.inf.	Z fin.sup	H fin.	Luce	Spessore	R. Trazione
-14.053	1.046	13.55	14.6	1.05	-14.853	1.046	13.55	14.6	1.05	0.8	0.28	30000

Caratteristiche del materiale

(Circolare 7 21-01-19 C8.5.I) Muratura in mattoni pieni e malta di calce LC2_Corti

fb_	fhk	fvk0	fhmedio	τ0	fv0	μ	ϕ	fvk,lim	E	G	FC
120000			172500	9000	20000	0.577	0.767	6500	320000000	128000000	1.2

Verifiche a pressoflessione delle travi in muratura in combinazioni non sismiche

Sezione	γM	N	M	Mu	Comb.	c.s.	Verifica
ini.	3	-1669	-351.59	1566.2	SLU 80	4.45	Si
fin.	3	-1247	165.5	1566.2	SLU 80	9.46	Si
ini.	3	-1691	-368.89	1566.2	SLU 77	4.25	Si
fin.	3	-1222	184.16	1566.2	SLU 77	8.5	Si
ini.	3	-1639	-354.03	1566.2	SLU 79	4.42	Si
fin.	3	-1194	180.51	1566.2	SLU 79	8.68	Si
ini.	3	-1416	-329.42	1566.2	SLU 74	4.75	Si
fin.	3	-953	186.12	1566.2	SLU 74	8.42	Si
ini.	3	-1465	-330.84	1566.2	SLU 56	4.73	Si
fin.	3	-1081	137.72	1566.2	SLU 56	11.37	Si
ini.	3	-1574	-351.21	1566.2	SLU 70	4.46	Si
fin.	3	-1197	125.76	1566.2	SLU 70	12.45	Si
ini.	3	-1721	-366.46	1566.2	SLU 78	4.27	Si
fin.	3	-1275	169.15	1566.2	SLU 78	9.26	Si
ini.	3	-1522	-336.34	1566.2	SLU 72	4.66	Si
fin.	3	-1168	122.1	1566.2	SLU 72	12.83	Si
ini.	3	-1492	-338.78	1566.2	SLU 71	4.62	Si
fin.	3	-1115	137.11	1566.2	SLU 71	11.42	Si
ini.	3	-1544	-353.65	1566.2	SLU 69	4.43	Si
fin.	3	-1143	140.77	1566.2	SLU 69	11.13	Si

Verifiche a taglio delle travi in muratura secondo §C8.7.1.3.1 in combinazioni non sismiche

Sezione	γM	N	M	V	Vt	Vp	Vt fess. diag.	Vt,lim	Comb.	c.s.	Verifica
ini.	3	-1691	-368.89	3408			1809	703	SLU 77	0.21	No
fin.	3	-1222	184.16	-401			1621	639	SLU 77	1.59	Si
ini.	3	-1544	-353.65	3293			1750	684	SLU 69	0.21	No
fin.	3	-1143	140.77	-531			1590	627	SLU 69	1.18	Si
ini.	3	-1492	-338.78	3154			1729	677	SLU 71	0.21	No
fin.	3	-1115	137.11	-517			1578	623	SLU 71	1.2	Si
ini.	3	-1446	-326.98	3097			1711	670	SLU 75	0.22	No
fin.	3	-1007	171.11	-377			1535	607	SLU 75	1.61	Si
ini.	3	-1721	-366.46	3369			1821	707	SLU 78	0.21	No
fin.	3	-1275	169.15	-439			1642	646	SLU 78	1.47	Si
ini.	3	-1270	-314.17	3022			1640	646	SLU 66	0.21	No
fin.	3	-875	142.72	-468			1482	586	SLU 66	1.25	Si
ini.	3	-1574	-351.21	3253			1762	688	SLU 70	0.21	No
fin.	3	-1197	125.76	-569			1611	635	SLU 70	1.12	Si
ini.	3	-1416	-329.42	3137			1699	666	SLU 74	0.21	No
fin.	3	-953	186.12	-339			1514	598	SLU 74	1.76	Si
ini.	3	-1639	-354.03	3269			1788	696	SLU 79	0.21	No
fin.	3	-1194	180.51	-388			1610	635	SLU 79	1.64	Si
ini.	3	-1465	-330.84	3122			1718	673	SLU 56	0.22	No
fin.	3	-1081	137.72	-509			1565	618	SLU 56	1.21	Si

Verifiche a pressoflessione delle travi in muratura in combinazioni sismiche

Sezione	γM	N	M	Mu	Comb.	c.s.	Verifica
ini.	2	-5331	-937.95	2349.3	SLV 2	2.5	Si
fin.	2	-6182	-1311.05	2349.3	SLV 2	1.79	Si
ini.	2	983	-240.38	2349.3	SLV 10	9.77	Si
fin.	2	2847	1013.71	2349.3	SLV 10	2.32	Si
ini.	2	-5505	-790.91	2349.3	SLV 4	2.97	Si
fin.	2	-7040	-1573.36	2349.3	SLV 4	1.49	Si
ini.	2	3897	546.22	2349.3	SLV 16	4.3	Si
fin.	2	5310	1532.39	2349.3	SLV 16	1.53	Si
ini.	2	-5331	-937.95	2349.3	SLV 1	2.5	Si
fin.	2	-6182	-1311.05	2349.3	SLV 1	1.79	Si
ini.	2	3897	546.22	2349.3	SLV 15	4.3	Si
fin.	2	5310	1532.39	2349.3	SLV 15	1.53	Si
ini.	2	4071	399.17	2349.3	SLV 14	5.89	Si
fin.	2	6168	1794.7	2349.3	SLV 14	1.31	Si
ini.	2	-5505	-790.91	2349.3	SLV 3	2.97	Si
fin.	2	-7040	-1573.36	2349.3	SLV 3	1.49	Si
ini.	2	983	-240.38	2349.3	SLV 9	9.77	Si
fin.	2	2847	1013.71	2349.3	SLV 9	2.32	Si
ini.	2	4071	399.17	2349.3	SLV 13	5.89	Si
fin.	2	6168	1794.7	2349.3	SLV 13	1.31	Si

Verifiche a taglio delle travi in muratura secondo §C8.7.1.3.1 in combinazioni sismiche

Sezione	γM	N	M	V	Vt	Vp	Vt fess. diag.	Vt,lim	Comb.	c.s.	Verifica
ini.	2	-5505	-790.91	1519			3900	1392	SLV 4	0.92	No
fin.	2	-7040	-1573.36	-3703			4514	1538	SLV 4	0.42	No
ini.	2	983	-240.38	3932			1698	368	SLV 10	0.09	No
fin.	2	2847	1013.71	1994			1698	0	SLV 10	0	No
ini.	2	-1837	-641.52	4015			2433	959	SLV 5	0.24	No
fin.	2	-858	81.99	195			2042	804	SLV 5	4.13	Si
ini.	2	983	-240.38	3932			1698	368	SLV 9	0.09	No
fin.	2	2847	1013.71	1994			1698	0	SLV 9	0	No
ini.	2	3897	546.22	1241			1698	0	SLV 16	0	No
fin.	2	5310	1532.39	2295			1698	0	SLV 16	0	No
ini.	2	4071	399.17	2439			1698	0	SLV 13	0	No
fin.	2	6168	1794.7	3125			1698	0	SLV 13	0	No
ini.	2	-1837	-641.52	4015			2433	959	SLV 6	0.24	No
fin.	2	-858	81.99	195			2042	804	SLV 6	4.13	Si

Sezione	γM	N	M	V	Vt	Vp	Vt fess. diag.	Vt,lim	Comb.	c.s.	Verifica
ini.	2	4071	399.17	2439			1698	0	SLV 14	0	No
fin.	2	6168	1794.7	3125			1698	0	SLV 14	0	No
ini.	2	3897	546.22	1241			1698	0	SLV 15	0	No
fin.	2	5310	1532.39	2295			1698	0	SLV 15	0	No
ini.	2	-5505	-790.91	1519			3900	1392	SLV 3	0.92	No
fin.	2	-7040	-1573.36	-3703			4514	1538	SLV 3	0.42	No

Tabella dei coefficienti di sicurezza minimi

Stato limite	Coeff.s.	Comb.	Verifica
PF_SLV	1.309	SLV 13	Si
V_SLV	0	SLV 9	No
PF_SLU	4.246	SLU 77	Si
V_SLU	0.206	SLU 77	No

Trave di accoppiamento 154

Verifiche condotte secondo D.M. 17-01-18 (N.T.C.)

Dati geometrici

X ini.	Y ini.	Z ini.inf.	Z ini.sup.	H ini.	X fin.	Y fin.	Z fin.inf.	Z fin.sup	H fin.	Luce	Spessore	R. Trazione
-12.543	1.046	13.55	14.6	1.05	-13.543	1.046	13.55	14.6	1.05	1	0.28	30000

Caratteristiche del materiale

(Circolare 7 21-01-19 C8.5.I) Muratura in mattoni pieni e malta di calce LC2_Corti

fb_	fhk	fvk0	fhmedio	τ0	fv0	μ	ϕ	fvk,lim	E	G	FC
120000			172500	9000	20000	0.577	0.767	6500	320000000	128000000	1.2

Verifiche a pressoflessione delle travi in muratura in combinazioni non sismiche

Sezione	γM	N	M	Mu	Comb.	c.s.	Verifica
ini.	3	-548	154.83	1566.2	SLU 56	10.12	Si
fin.	3	-1322	-288.79	1566.2	SLU 56	5.42	Si
ini.	3	-706	175.08	1566.2	SLU 79	8.95	Si
fin.	3	-1484	-293.2	1566.2	SLU 79	5.34	Si
ini.	3	-566	155.81	1566.2	SLU 72	10.05	Si
fin.	3	-1364	-286.99	1566.2	SLU 72	5.46	Si
ini.	3	-726	177.5	1566.2	SLU 80	8.82	Si
fin.	3	-1510	-290.72	1566.2	SLU 80	5.39	Si
ini.	3	-582	159.63	1566.2	SLU 70	9.81	Si
fin.	3	-1414	-303.79	1566.2	SLU 70	5.16	Si
ini.	3	-742	181.32	1566.2	SLU 78	8.64	Si
fin.	3	-1561	-307.52	1566.2	SLU 78	5.09	Si
ini.	3	-722	178.9	1566.2	SLU 77	8.75	Si
fin.	3	-1534	-309.99	1566.2	SLU 77	5.05	Si
ini.	3	-562	157.21	1566.2	SLU 69	9.96	Si
fin.	3	-1388	-306.26	1566.2	SLU 69	5.11	Si
ini.	3	-546	153.39	1566.2	SLU 71	10.21	Si
fin.	3	-1337	-289.47	1566.2	SLU 71	5.41	Si
ini.	3	-567	157.25	1566.2	SLU 57	9.96	Si
fin.	3	-1349	-286.32	1566.2	SLU 57	5.47	Si

Verifiche a taglio delle travi in muratura secondo §C8.7.1.3.1 in combinazioni non sismiche

Sezione	γM	N	M	V	Vt	Vp	Vt fess. diag.	Vt,lim	Comb.	c.s.	Verifica
ini.	3	-566	155.81	1175			1359	535	SLU 72	0.46	No
fin.	3	-1364	-286.99	-3206			1678	659	SLU 72	0.21	No
ini.	3	-548	154.83	1159			1351	532	SLU 56	0.46	No
fin.	3	-1322	-288.79	-3172			1661	653	SLU 56	0.21	No
ini.	3	-407	135.56	1161			1295	507	SLU 49	0.44	No
fin.	3	-1202	-282.59	-3131			1613	636	SLU 49	0.2	No
ini.	3	-388	133.15	1172			1287	503	SLU 48	0.43	No
fin.	3	-1176	-285.06	-3138			1603	632	SLU 48	0.2	No
ini.	3	-722	178.9	1220			1421	562	SLU 77	0.46	No
fin.	3	-1534	-309.99	-3384			1746	682	SLU 77	0.2	No
ini.	3	-546	153.39	1187			1351	532	SLU 71	0.45	No
fin.	3	-1337	-289.47	-3213			1667	655	SLU 71	0.2	No
ini.	3	-582	159.63	1221			1365	538	SLU 70	0.44	No
fin.	3	-1414	-303.79	-3343			1698	666	SLU 70	0.2	No
ini.	3	-562	157.21	1233			1357	534	SLU 69	0.43	No
fin.	3	-1388	-306.26	-3350			1687	662	SLU 69	0.2	No
ini.	3	-424	136.2	1135			1302	510	SLU 66	0.45	No
fin.	3	-1144	-280.2	-3024			1590	627	SLU 66	0.21	No
ini.	3	-742	181.32	1208			1429	565	SLU 78	0.47	No
fin.	3	-1561	-307.52	-3377			1757	686	SLU 78	0.2	No

Verifiche a pressoflessione delle travi in muratura in combinazioni sismiche

Sezione	γM	N	M	Mu	Comb.	c.s.	Verifica
ini.	2	678	-121.03	2349.3	SLV 6	19.41	Si
fin.	2	-1424	-757.77	2349.3	SLV 6	3.1	Si
ini.	2	461	-191.42	2349.3	SLV 2	12.27	Si
fin.	2	-4541	-1261.79	2349.3	SLV 2	1.86	Si
ini.	2	678	-121.03	2349.3	SLV 5	19.41	Si
fin.	2	-1424	-757.77	2349.3	SLV 5	3.1	Si
ini.	2	5	-109.51	2349.3	SLV 3	21.45	Si
fin.	2	-4799	-1094.36	2349.3	SLV 3	2.15	Si
ini.	2	5	-109.51	2349.3	SLV 4	21.45	Si
fin.	2	-4799	-1094.36	2349.3	SLV 4	2.15	Si
ini.	2	-892	364.59	2349.3	SLV 15	6.44	Si
fin.	2	3244	903.83	2349.3	SLV 15	2.6	Si

Sezione	γM	N	M	Mu	Comb.	c.s.	Verifica
ini.	2	-892	364.59	2349.3	SLV 16	6.44	Si
fin.	2	3244	903.83	2349.3	SLV 16	2.6	Si
ini.	2	-436	282.69	2349.3	SLV 14	8.31	Si
fin.	2	3503	736.39	2349.3	SLV 14	3.19	Si
ini.	2	-436	282.69	2349.3	SLV 13	8.31	Si
fin.	2	3503	736.39	2349.3	SLV 13	3.19	Si
ini.	2	461	-191.42	2349.3	SLV 1	12.27	Si
fin.	2	-4541	-1261.79	2349.3	SLV 1	1.86	Si

Verifiche a taglio delle travi in muratura secondo §C8.7.1.3.1 in combinazioni sismiche

Sezione	γM	N	M	V	Vt	Vp	Vt fess. diag.	Vt,lim	Comb.	c.s.	Verifica
ini.	2	5	-109.51	-1131			1698	638	SLV 3	0.56	No
fin.	2	-4799	-1094.36	-6424			3618	1320	SLV 3	0.21	No
ini.	2	5	-109.51	-1131			1698	638	SLV 4	0.56	No
fin.	2	-4799	-1094.36	-6424			3618	1320	SLV 4	0.21	No
ini.	2	461	-191.42	-995			1698	530	SLV 1	0.53	No
fin.	2	-4541	-1261.79	-6904			3515	1292	SLV 1	0.19	No
ini.	2	461	-191.42	-995			1698	530	SLV 2	0.53	No
fin.	2	-4541	-1261.79	-6904			3515	1292	SLV 2	0.19	No
ini.	2	-892	364.59	2486			2055	810	SLV 15	0.33	No
fin.	2	3244	903.83	3038			1698	0	SLV 15	0	No
ini.	2	678	-121.03	429			1698	469	SLV 5	1.09	Si
fin.	2	-1424	-757.77	-4152			2268	897	SLV 5	0.22	No
ini.	2	678	-121.03	429			1698	469	SLV 6	1.09	Si
fin.	2	-1424	-757.77	-4152			2268	897	SLV 6	0.22	No
ini.	2	-892	364.59	2486			2055	810	SLV 16	0.33	No
fin.	2	3244	903.83	3038			1698	0	SLV 16	0	No
ini.	2	-436	282.69	2622			1873	728	SLV 14	0.28	No
fin.	2	3503	736.39	2558			1698	0	SLV 14	0	No
ini.	2	-436	282.69	2622			1873	728	SLV 13	0.28	No
fin.	2	3503	736.39	2558			1698	0	SLV 13	0	No

Tabella dei coefficienti di sicurezza minimi

Stato limite	Coeff.s.	Comb.	Verifica
PF_SLV	1.862	SLV 1	Si
V_SLV	0	SLV 13	No
PF_SLU	5.052	SLU 77	Si
V_SLU	0.198	SLU 69	No

Trave di accoppiamento 155

Verifiche condotte secondo D.M. 17-01-18 (N.T.C.)

Dati geometrici

X ini.	Y ini.	Z ini.inf.	Z ini.sup.	H ini.	X fin.	Y fin.	Z fin.inf.	Z fin.sup	H fin.	Luce	Spessore	R. Trazione
-11.163	1.046	13.95	14.6	0.65	-12.283	1.046	13.95	14.6	0.65	1.12	0.28	30000

Caratteristiche del materiale

(Circolare 7 21-01-19 C8.5.I) Muratura in mattoni pieni e malta di calce LC2_Corti

fb_	fhk	fvk0	fhmedio	τ0	fv0	μ	ϕ	fvk,lim	E	G	FC
120000			172500	9000	20000	0.577	0.767	6500	320000000	128000000	1.2

Verifiche a pressoflessione delle travi in muratura in combinazioni non sismiche

Sezione	γM	N	M	Mu	Comb.	c.s.	Verifica
ini.	3	-2105	-531.59	600.2	SLU 56	1.13	Si
fin.	3	-551	76.61	600.2	SLU 56	7.83	Si
ini.	3	-2120	-539.74	600.2	SLU 71	1.11	Si
fin.	3	-546	76.28	600.2	SLU 71	7.87	Si
ini.	3	-2387	-576.69	600.2	SLU 77	1.04	Si
fin.	3	-728	75.61	600.2	SLU 77	7.94	Si
ini.	3	-2177	-555.88	600.2	SLU 69	1.08	Si
fin.	3	-559	77.12	600.2	SLU 69	7.78	Si
ini.	3	-2120	-530.94	600.2	SLU 57	1.13	Si
fin.	3	-570	75.6	600.2	SLU 57	7.94	Si
ini.	3	-2344	-559.91	600.2	SLU 80	1.07	Si
fin.	3	-734	73.76	600.2	SLU 80	8.14	Si
ini.	3	-2330	-560.55	600.2	SLU 79	1.07	Si
fin.	3	-715	74.77	600.2	SLU 79	8.03	Si
ini.	3	-2401	-576.05	600.2	SLU 78	1.04	Si
fin.	3	-747	74.6	600.2	SLU 78	8.05	Si
ini.	3	-2134	-539.09	600.2	SLU 72	1.11	Si
fin.	3	-565	75.27	600.2	SLU 72	7.97	Si
ini.	3	-2191	-555.24	600.2	SLU 70	1.08	Si
fin.	3	-578	76.11	600.2	SLU 70	7.89	Si

Verifiche a taglio delle travi in muratura secondo §C8.7.1.3.1 in combinazioni non sismiche

Sezione	γM	N	M	V	Vt	Vp	Vt fess. diag.	Vt,lim	Comb.	c.s.	Verifica
ini.	3	-2191	-555.24	3031			1052	378	SLU 70	0.12	No
fin.	3	-578	76.11	-200			621	246	SLU 70	1.23	Si
ini.	3	-2401	-576.05	3098			1107	392	SLU 78	0.13	No
fin.	3	-747	74.6	-193			666	263	SLU 78	1.36	Si
ini.	3	-2330	-560.55	3015			1089	387	SLU 79	0.13	No
fin.	3	-715	74.77	-182			658	260	SLU 79	1.43	Si
ini.	3	-2105	-531.59	2902			1029	372	SLU 56	0.13	No
fin.	3	-551	76.61	-180			614	243	SLU 56	1.35	Si
ini.	3	-2177	-555.88	3038			1048	377	SLU 69	0.12	No
fin.	3	-559	77.12	-199			616	244	SLU 69	1.22	Si

Sezione	γM	N	M	V	Vt	Vp	Vt fess. diag.	Vt,lim	Comb.	c.s.	Verifica
ini.	3	-1896	-510.77	2835			973	357	SLU 48	0.13	No
fin.	3	-382	78.13	-187			569	225	SLU 48	1.2	Si
ini.	3	-2387	-576.69	3106			1104	391	SLU 77	0.13	No
fin.	3	-728	75.61	-192			661	261	SLU 77	1.36	Si
ini.	3	-2120	-539.74	2948			1033	373	SLU 71	0.13	No
fin.	3	-546	76.28	-189			613	242	SLU 71	1.28	Si
ini.	3	-2134	-539.09	2941			1036	374	SLU 72	0.13	No
fin.	3	-565	75.27	-190			618	244	SLU 72	1.29	Si
ini.	3	-1910	-510.13	2828			977	358	SLU 49	0.13	No
fin.	3	-401	77.11	-188			574	227	SLU 49	1.21	Si

Verifiche a pressoflessione delle travi in muratura in combinazioni sismiche

Sezione	γM	N	M	Mu	Comb.	c.s.	Verifica
ini.	2	-7603	-1596.14	900.3	SLV 16	0.56	No
fin.	2	-2377	421.21	900.3	SLV 16	2.14	Si
ini.	2	-1884	-704.17	900.3	SLV 10	1.28	Si
fin.	2	22	155.43	900.3	SLV 10	5.79	Si
ini.	2	-6923	-1596.7	900.3	SLV 14	0.56	No
fin.	2	-1884	415.73	900.3	SLV 14	2.17	Si
ini.	2	-7603	-1596.14	900.3	SLV 15	0.56	No
fin.	2	-2377	421.21	900.3	SLV 15	2.14	Si
ini.	2	-1884	-704.17	900.3	SLV 9	1.28	Si
fin.	2	22	155.43	900.3	SLV 9	5.79	Si
ini.	2	4531	955.83	900.3	SLV 4	0.94	No
fin.	2	1428	-304.24	900.3	SLV 4	2.96	Si
ini.	2	5210	955.27	900.3	SLV 2	0.94	No
fin.	2	1921	-309.72	900.3	SLV 2	2.91	Si
ini.	2	5210	955.27	900.3	SLV 1	0.94	No
fin.	2	1921	-309.72	900.3	SLV 1	2.91	Si
ini.	2	4531	955.83	900.3	SLV 3	0.94	No
fin.	2	1428	-304.24	900.3	SLV 3	2.96	Si
ini.	2	-6923	-1596.7	900.3	SLV 13	0.56	No
fin.	2	-1884	415.73	900.3	SLV 13	2.17	Si

Verifiche a taglio delle travi in muratura secondo §C8.7.1.3.1 in combinazioni sismiche

Sezione	γM	N	M	V	Vt	Vp	Vt fess. diag.	Vt,lim	Comb.	c.s.	Verifica
ini.	2	-7603	-1596.14	6254			2728	807	SLV 15	0.13	No
fin.	2	-2377	421.21	1685			1335	501	SLV 15	0.3	No
ini.	2	4531	955.83	-2869			701	0	SLV 4	0	No
fin.	2	1428	-304.24	-1844			701	0	SLV 4	0	No
ini.	2	1756	61.42	733			701	0	SLV 5	0	No
fin.	2	1164	-62.2	-727			701	0	SLV 5	0	No
ini.	2	5210	955.27	-2681			701	0	SLV 1	0	No
fin.	2	1921	-309.72	-1899			701	0	SLV 1	0	No
ini.	2	4531	955.83	-2869			701	0	SLV 3	0	No
fin.	2	1428	-304.24	-1844			701	0	SLV 3	0	No
ini.	2	-7603	-1596.14	6254			2728	807	SLV 16	0.13	No
fin.	2	-2377	421.21	1685			1335	501	SLV 16	0.3	No
ini.	2	1756	61.42	733			701	0	SLV 6	0	No
fin.	2	1164	-62.2	-727			701	0	SLV 6	0	No
ini.	2	-6923	-1596.7	6443			2547	774	SLV 14	0.12	No
fin.	2	-1884	415.73	1631			1203	462	SLV 14	0.28	No
ini.	2	-6923	-1596.7	6443			2547	774	SLV 13	0.12	No
fin.	2	-1884	415.73	1631			1203	462	SLV 13	0.28	No
ini.	2	5210	955.27	-2681			701	0	SLV 2	0	No
fin.	2	1921	-309.72	-1899			701	0	SLV 2	0	No

Tabella dei coefficienti di sicurezza minimi

Stato limite	Coeff.s.	Comb.	Verifica
PF_SLV	0.564	SLV 13	No
V_SLV	0	SLV 1	No
PF_SLU	1.041	SLU 77	Si
V_SLU	0.124	SLU 69	No

Trave di accoppiamento 156

Verifiche condotte secondo D.M. 17-01-18 (N.T.C.)

Dati geometrici

X ini.	Y ini.	Z ini.inf.	Z ini.sup.	H ini.	X fin.	Y fin.	Z fin.inf.	Z fin.sup	H fin.	Luce	Spessore	R. Trazione
-11.093	3.334	13.55	14.6	1.05	-11.893	3.334	13.55	14.6	1.05	0.8	0.14	30000

Caratteristiche del materiale

(Circolare 7 21-01-19 C8.5.I) Muratura in mattoni pieni e malta di calce LC2_Corti

fb_	fhk	fvk0	fhmedio	τ0	fv0	μ	ϕ	fvk,lim	E	G	FC
120000			172500	9000	20000	0.577	0.767	6500	320000000	128000000	1.2

Verifiche a pressoflessione delle travi in muratura in combinazioni non sismiche

Sezione	γM	N	M	Mu	Comb.	c.s.	Verifica
ini.	3	-197	424.2	783.1	SLU 35	1.85	Si
fin.	3	-197	562.29	783.1	SLU 35	1.39	Si
ini.	3	-209	421.25	783.1	SLU 81	1.86	Si
fin.	3	-209	595.59	783.1	SLU 81	1.31	Si
ini.	3	-211	466.12	783.1	SLU 78	1.68	Si
fin.	3	-211	603.17	783.1	SLU 78	1.3	Si
ini.	3	-197	424.33	783.1	SLU 36	1.85	Si
fin.	3	-197	562.55	783.1	SLU 36	1.39	Si

Sezione	γM	N	M	Mu	Comb.	c.s.	Verifica
ini.	3	-209	463.3	783.1	SLU 75	1.69	Si
fin.	3	-209	598.61	783.1	SLU 75	1.31	Si
ini.	3	-210	424.07	783.1	SLU 83	1.85	Si
fin.	3	-210	600.16	783.1	SLU 83	1.3	Si
ini.	3	-209	421.38	783.1	SLU 82	1.86	Si
fin.	3	-209	595.84	783.1	SLU 82	1.31	Si
ini.	3	-209	463.17	783.1	SLU 74	1.69	Si
fin.	3	-209	598.36	783.1	SLU 74	1.31	Si
ini.	3	-211	424.2	783.1	SLU 84	1.85	Si
fin.	3	-211	600.41	783.1	SLU 84	1.3	Si
ini.	3	-211	465.99	783.1	SLU 77	1.68	Si
fin.	3	-211	602.92	783.1	SLU 77	1.3	Si

Verifiche a taglio delle travi in muratura secondo §C8.7.1.3.1 in combinazioni non sismiche

Sezione	γM	N	M	V	Vt	Vp	Vt fess. diag.	Vt,lim	Comb.	c.s.	Verifica
ini.	3	-211	424.2	477			650	255	SLU 84	0.53	No
fin.	3	-211	600.41	-54			650	255	SLU 84	4.68	Si
ini.	3	-197	424.33	468			645	252	SLU 36	0.54	No
fin.	3	-197	562.55	-115			645	252	SLU 36	2.18	Si
ini.	3	-210	424.07	476			650	255	SLU 83	0.53	No
fin.	3	-210	600.16	-55			650	255	SLU 83	4.67	Si
ini.	3	-197	424.2	467			645	252	SLU 35	0.54	No
fin.	3	-197	562.29	-116			645	252	SLU 35	2.18	Si
ini.	3	-209	463.3	512			650	255	SLU 75	0.5	No
fin.	3	-209	598.61	-174			650	255	SLU 75	1.46	Si
ini.	3	-209	421.38	474			650	254	SLU 82	0.54	No
fin.	3	-209	595.84	-57			650	254	SLU 82	4.49	Si
ini.	3	-209	463.17	512			650	254	SLU 74	0.5	No
fin.	3	-209	598.36	-175			650	254	SLU 74	1.46	Si
ini.	3	-211	465.99	514			650	255	SLU 77	0.5	No
fin.	3	-211	602.92	-172			650	255	SLU 77	1.48	Si
ini.	3	-211	466.12	514			650	255	SLU 78	0.5	No
fin.	3	-211	603.17	-172			650	255	SLU 78	1.48	Si
ini.	3	-209	421.25	474			650	254	SLU 81	0.54	No
fin.	3	-209	595.59	-57			650	254	SLU 81	4.48	Si

Verifiche a pressoflessione delle travi in muratura in combinazioni sismiche

Sezione	γM	N	M	Mu	Comb.	c.s.	Verifica
ini.	2	-522	441.55	1174.65	SLV 8	2.66	Si
fin.	2	-559	578.63	1174.65	SLV 8	2.03	Si
ini.	2	-793	-101.58	1174.65	SLV 1	11.56	Si
fin.	2	-948	-712.11	1174.65	SLV 1	1.65	Si
ini.	2	562	611.95	1174.65	SLV 16	1.92	Si
fin.	2	718	1374.8	1174.65	SLV 16	0.85	No
ini.	2	673	450.45	1174.65	SLV 13	2.61	Si
fin.	2	824	1066.36	1174.65	SLV 13	1.1	Si
ini.	2	-793	-101.58	1174.65	SLV 2	11.56	Si
fin.	2	-948	-712.11	1174.65	SLV 2	1.65	Si
ini.	2	-82	607.16	1174.65	SLV 12	1.93	Si
fin.	2	-27	1112.17	1174.65	SLV 12	1.06	Si
ini.	2	-522	441.55	1174.65	SLV 7	2.66	Si
fin.	2	-559	578.63	1174.65	SLV 7	2.03	Si
ini.	2	562	611.95	1174.65	SLV 15	1.92	Si
fin.	2	718	1374.8	1174.65	SLV 15	0.85	No
ini.	2	-82	607.16	1174.65	SLV 11	1.93	Si
fin.	2	-27	1112.17	1174.65	SLV 11	1.06	Si
ini.	2	673	450.45	1174.65	SLV 14	2.61	Si
fin.	2	824	1066.36	1174.65	SLV 14	1.1	Si

Verifiche a taglio delle travi in muratura secondo §C8.7.1.3.1 in combinazioni sismiche

Sezione	γM	N	M	V	Vt	Vp	Vt fess. diag.	Vt,lim	Comb.	c.s.	Verifica
ini.	2	-82	607.16	867			882	337	SLV 12	0.39	No
fin.	2	-27	1112.17	443			860	325	SLV 12	0.73	No
ini.	2	-149	-96.79	-292			909	350	SLV 5	1.2	Si
fin.	2	-203	-449.49	-668			931	361	SLV 5	0.54	No
ini.	2	-793	-101.58	-672			1166	461	SLV 1	0.69	No
fin.	2	-948	-712.11	-1029			1229	484	SLV 1	0.47	No
ini.	2	673	450.45	1055			849	93	SLV 14	0.09	No
fin.	2	824	1066.36	619			849	0	SLV 14	0	No
ini.	2	-793	-101.58	-672			1166	461	SLV 2	0.69	No
fin.	2	-948	-712.11	-1029			1229	484	SLV 2	0.47	No
ini.	2	562	611.95	1247			849	155	SLV 15	0.12	No
fin.	2	718	1374.8	804			849	49	SLV 15	0.06	No
ini.	2	-149	-96.79	-292			909	350	SLV 6	1.2	Si
fin.	2	-203	-449.49	-668			931	361	SLV 6	0.54	No
ini.	2	562	611.95	1247			849	155	SLV 16	0.12	No
fin.	2	718	1374.8	804			849	49	SLV 16	0.06	No
ini.	2	-82	607.16	867			882	337	SLV 11	0.39	No
fin.	2	-27	1112.17	443			860	325	SLV 11	0.73	No
ini.	2	673	450.45	1055			849	93	SLV 13	0.09	No
fin.	2	824	1066.36	619			849	0	SLV 13	0	No

Tabella dei coefficienti di sicurezza minimi

Stato limite	Coeff.s.	Comb.	Verifica
PF_SLV	0.854	SLV 15	No
V_SLV	0	SLV 13	No
PF_SLU	1.298	SLU 78	Si
V_SLU	0.495	SLU 78	No

Trave di accoppiamento 157

Verifiche condotte secondo D.M. 17-01-18 (N.T.C.)

Dati geometrici

X ini.	Y ini.	Z ini.inf.	Z ini.sup.	H ini.	X fin.	Y fin.	Z fin.inf.	Z fin.sup	H fin.	Luce	Spessore	R. Trazione
-9.988	3.334	13.55	14.6	1.05	-10.788	3.334	13.55	14.6	1.05	0.8	0.14	30000

Caratteristiche del materiale

(Circolare 7 21-01-19 C8.5.I) Muratura in mattoni pieni e malta di calce LC2_Corti

fb_	fhk	fvk0	fhmedio	τ0	fv0	μ	ϕ	fvk,lim	E	G	FC
120000			172500	9000	20000	0.577	0.767	6500	320000000	128000000	1.2

Verifiche a pressoflessione delle travi in muratura in combinazioni non sismiche

Sezione	γM	N	M	Mu	Comb.	c.s.	Verifica
ini.	3	-139	2.03	783.1	SLU 77	386.41	Si
fin.	3	-139	465.93	783.1	SLU 77	1.68	Si
ini.	3	-139	2	783.1	SLU 78	392.32	Si
fin.	3	-139	466.05	783.1	SLU 78	1.68	Si
ini.	3	-131	-6.11	783.1	SLU 36	128.2	Si
fin.	3	-131	422.87	783.1	SLU 36	1.85	Si
ini.	3	-138	2.33	783.1	SLU 74	336.34	Si
fin.	3	-138	463.34	783.1	SLU 74	1.69	Si
ini.	3	-138	2.3	783.1	SLU 75	340.81	Si
fin.	3	-138	463.46	783.1	SLU 75	1.69	Si
ini.	3	-130	-5.78	783.1	SLU 32	135.57	Si
fin.	3	-130	420.15	783.1	SLU 32	1.86	Si
ini.	3	-139	-21.19	783.1	SLU 83	36.95	Si
fin.	3	-139	419.79	783.1	SLU 83	1.87	Si
ini.	3	-131	-6.08	783.1	SLU 35	128.84	Si
fin.	3	-131	422.74	783.1	SLU 35	1.85	Si
ini.	3	-130	-5.81	783.1	SLU 33	134.86	Si
fin.	3	-130	420.27	783.1	SLU 33	1.86	Si
ini.	3	-139	-21.22	783.1	SLU 84	36.9	Si
fin.	3	-139	419.92	783.1	SLU 84	1.86	Si

Verifiche a taglio delle travi in muratura secondo §C8.7.1.3.1 in combinazioni non sismiche

Sezione	γM	N	M	V	Vt	Vp	Vt fess. diag.	Vt,lim	Comb.	c.s.	Verifica
ini.	3	-131	-6.11	845			618	240	SLU 36	0.28	No
fin.	3	-131	422.87	268			618	240	SLU 36	0.9	No
ini.	3	-139	2.03	939			622	241	SLU 77	0.26	No
fin.	3	-139	465.93	260			622	241	SLU 77	0.93	No
ini.	3	-138	2.33	936			621	241	SLU 74	0.26	No
fin.	3	-138	463.34	256			621	241	SLU 74	0.94	No
ini.	3	-109	22.36	836			610	236	SLU 69	0.28	No
fin.	3	-109	403.39	156			610	236	SLU 69	1.51	Si
ini.	3	-138	2.3	936			621	241	SLU 75	0.26	No
fin.	3	-138	463.46	256			621	241	SLU 75	0.94	No
ini.	3	-109	22.33	836			610	236	SLU 70	0.28	No
fin.	3	-109	403.51	156			610	236	SLU 70	1.51	Si
ini.	3	-131	-6.08	845			618	240	SLU 35	0.28	No
fin.	3	-131	422.74	268			618	240	SLU 35	0.9	No
ini.	3	-108	22.66	832			609	235	SLU 66	0.28	No
fin.	3	-108	400.79	152			609	235	SLU 66	1.54	Si
ini.	3	-139	2	939			622	241	SLU 78	0.26	No
fin.	3	-139	466.05	260			622	241	SLU 78	0.93	No
ini.	3	-108	22.63	832			609	235	SLU 67	0.28	No
fin.	3	-108	400.92	153			609	235	SLU 67	1.54	Si

Verifiche a pressoflessione delle travi in muratura in combinazioni sismiche

Sezione	γM	N	M	Mu	Comb.	c.s.	Verifica
ini.	2	-392	-101.08	1174.65	SLV 8	11.62	Si
fin.	2	-408	429.83	1174.65	SLV 8	2.73	Si
ini.	2	-392	-101.08	1174.65	SLV 7	11.62	Si
fin.	2	-408	429.83	1174.65	SLV 7	2.73	Si
ini.	2	-85	-66.39	1174.65	SLV 11	17.69	Si
fin.	2	-47	583.14	1174.65	SLV 11	2.01	Si
ini.	2	-85	-66.39	1174.65	SLV 12	17.69	Si
fin.	2	-47	583.14	1174.65	SLV 12	2.01	Si
ini.	2	386	34.95	1174.65	SLV 16	33.61	Si
fin.	2	481	586.4	1174.65	SLV 16	2	Si
ini.	2	240	107.54	1174.65	SLV 10	10.92	Si
fin.	2	257	81.43	1174.65	SLV 10	14.43	Si
ini.	2	386	34.95	1174.65	SLV 15	33.61	Si
fin.	2	481	586.4	1174.65	SLV 15	2	Si
ini.	2	240	107.54	1174.65	SLV 9	10.92	Si
fin.	2	257	81.43	1174.65	SLV 9	14.43	Si
ini.	2	484	87.13	1174.65	SLV 13	13.48	Si
fin.	2	572	435.89	1174.65	SLV 13	2.69	Si
ini.	2	484	87.13	1174.65	SLV 14	13.48	Si
fin.	2	572	435.89	1174.65	SLV 14	2.69	Si

Verifiche a taglio delle travi in muratura secondo §C8.7.1.3.1 in combinazioni sismiche

Sezione	γM	N	M	V	Vt	Vp	Vt fess. diag.	Vt,lim	Comb.	c.s.	Verifica
ini.	2	-392	-101.08	781			1006	396	SLV 8	0.51	No
fin.	2	-408	429.83	416			1013	399	SLV 8	0.96	No
ini.	2	-85	-66.39	1087			883	338	SLV 12	0.31	No
fin.	2	-47	583.14	658			868	330	SLV 12	0.5	No
ini.	2	484	87.13	900			849	187	SLV 14	0.21	No
fin.	2	572	435.89	400			849	150	SLV 14	0.38	No

Sezione	γM	N	M	V	Vt	Vp	Vt fess. diag.	Vt,lim	Comb.	c.s.	Verifica
ini.	2	386	34.95	1151			849	220	SLV 15	0.19	No
fin.	2	481	586.4	650			849	188	SLV 15	0.29	No
ini.	2	-66	72.86	-55			876	334	SLV 5	6.05	Si
fin.	2	-104	-71.88	-416			891	341	SLV 5	0.82	No
ini.	2	484	87.13	900			849	187	SLV 13	0.21	No
fin.	2	572	435.89	400			849	150	SLV 13	0.38	No
ini.	2	-66	72.86	-55			876	334	SLV 6	6.05	Si
fin.	2	-104	-71.88	-416			891	341	SLV 6	0.82	No
ini.	2	-85	-66.39	1087			883	338	SLV 11	0.31	No
fin.	2	-47	583.14	658			868	330	SLV 11	0.5	No
ini.	2	386	34.95	1151			849	220	SLV 16	0.19	No
fin.	2	481	586.4	650			849	188	SLV 16	0.29	No
ini.	2	-392	-101.08	781			1006	396	SLV 7	0.51	No
fin.	2	-408	429.83	416			1013	399	SLV 7	0.96	No

Tabella dei coefficienti di sicurezza minimi

Stato limite	Coeff.s.	Comb.	Verifica
PF_SLV	2.003	SLV 15	Si
V_SLV	0.191	SLV 15	No
PF_SLU	1.68	SLU 78	Si
V_SLU	0.257	SLU 78	No

Trave di accoppiamento 158

Verifiche condotte secondo D.M. 17-01-18 (N.T.C.)

Dati geometrici

X ini.	Y ini.	Z ini.inf.	Z ini.sup.	H ini.	X fin.	Y fin.	Z fin.inf.	Z fin.sup	H fin.	Luce	Spessore	R. Trazione
-17.796	6.536	11.45	12.35	0.9	-16.796	6.536	11.45	12.35	0.9	1	0.28	30000

Caratteristiche del materiale

(Circolare 7 21-01-19 C8.5.I) Muratura in mattoni pieni e malta di calce LC2_Corti

fb_	fhk	fvk0	fhmedio	τ0	fv0	μ	ϕ	fvk,lim	E	G	FC
120000			172500	9000	20000	0.577	0.767	6500	320000000	128000000	1.2

Verifiche a pressoflessione delle travi in muratura in combinazioni non sismiche

Sezione	γM	N	M	Mu	Comb.	c.s.	Verifica
ini.	3	-93	-84.75	1150.68	SLU 38	13.58	Si
fin.	3	-679	222.87	1150.68	SLU 38	5.16	Si
ini.	3	-132	-86.26	1150.68	SLU 79	13.34	Si
fin.	3	-777	249.33	1150.68	SLU 79	4.62	Si
ini.	3	-263	-38.65	1150.68	SLU 76	29.77	Si
fin.	3	-734	227.78	1150.68	SLU 76	5.05	Si
ini.	3	-141	-73.73	1150.68	SLU 78	15.61	Si
fin.	3	-753	247.7	1150.68	SLU 78	4.65	Si
ini.	3	-248	-35.28	1150.68	SLU 74	32.62	Si
fin.	3	-710	225.84	1150.68	SLU 74	5.1	Si
ini.	3	-141	-82.83	1150.68	SLU 80	13.89	Si
fin.	3	-777	249.45	1150.68	SLU 80	4.61	Si
ini.	3	-257	-31.84	1150.68	SLU 75	36.13	Si
fin.	3	-710	225.96	1150.68	SLU 75	5.09	Si
ini.	3	-284	-42.46	1150.68	SLU 83	27.1	Si
fin.	3	-772	239.02	1150.68	SLU 83	4.81	Si
ini.	3	-293	-39.03	1150.68	SLU 84	29.48	Si
fin.	3	-772	239.14	1150.68	SLU 84	4.81	Si
ini.	3	-132	-77.16	1150.68	SLU 77	14.91	Si
fin.	3	-753	247.58	1150.68	SLU 77	4.65	Si

Verifiche a taglio delle travi in muratura secondo §C8.7.1.3.1 in combinazioni non sismiche

Sezione	γM	N	M	V	Vt	Vp	Vt fess. diag.	Vt,lim	Comb.	c.s.	Verifica
ini.	3	-55	-87.3	432			893	339	SLU 72	0.79	No
fin.	3	-689	222.76	1272			1121	443	SLU 72	0.35	No
ini.	3	-12	-74.5	291			878	331	SLU 48	1.14	Si
fin.	3	-580	191.03	1286			1082	427	SLU 48	0.33	No
ini.	3	-46	-90.73	441			890	338	SLU 71	0.77	No
fin.	3	-689	222.64	1276			1121	443	SLU 71	0.35	No
ini.	3	-12	-83.59	342			878	331	SLU 50	0.97	No
fin.	3	-605	192.77	1262			1091	431	SLU 50	0.34	No
ini.	3	-97	-70.03	394			908	347	SLU 56	0.88	No
fin.	3	-669	217.72	1192			1114	440	SLU 56	0.37	No
ini.	3	-106	-66.59	385			912	349	SLU 57	0.91	No
fin.	3	-669	217.84	1188			1114	440	SLU 57	0.37	No
ini.	3	-21	-80.16	333			881	333	SLU 51	1	No
fin.	3	-605	192.89	1257			1091	431	SLU 51	0.34	No
ini.	3	-55	-78.2	381			893	339	SLU 70	0.89	No
fin.	3	-665	221.02	1296			1113	440	SLU 70	0.34	No
ini.	3	-21	-71.06	282			881	333	SLU 49	1.18	Si
fin.	3	-581	191.15	1282			1082	427	SLU 49	0.33	No
ini.	3	-46	-81.63	390			890	338	SLU 69	0.87	No
fin.	3	-665	220.9	1301			1113	440	SLU 69	0.34	No

Verifiche a pressoflessione delle travi in muratura in combinazioni sismiche

Sezione	γM	N	M	Mu	Comb.	c.s.	Verifica
ini.	2	-1562	624.86	1726.01	SLV 15	2.76	Si
fin.	2	1806	-290.6	1726.01	SLV 15	5.94	Si
ini.	2	1100	-629.88	1726.01	SLV 2	2.74	Si
fin.	2	-2748	568.35	1726.01	SLV 2	3.04	Si

Sezione	γM	N	M	Mu	Comb.	c.s.	Verifica
ini.	2	1469	-390.97	1726.01	SLV 7	4.41	Si
fin.	2	-48	204.22	1726.01	SLV 7	8.45	Si
ini.	2	-2278	735.09	1726.01	SLV 13	2.35	Si
fin.	2	1197	-255.66	1726.01	SLV 13	6.75	Si
ini.	2	1816	-740.11	1726.01	SLV 4	2.33	Si
fin.	2	-2139	533.4	1726.01	SLV 4	3.24	Si
ini.	2	-1562	624.86	1726.01	SLV 16	2.76	Si
fin.	2	1806	-290.6	1726.01	SLV 16	5.94	Si
ini.	2	-2278	735.09	1726.01	SLV 14	2.35	Si
fin.	2	1197	-255.66	1726.01	SLV 14	6.75	Si
ini.	2	1816	-740.11	1726.01	SLV 3	2.33	Si
fin.	2	-2139	533.4	1726.01	SLV 3	3.24	Si
ini.	2	1469	-390.97	1726.01	SLV 8	4.41	Si
fin.	2	-48	204.22	1726.01	SLV 8	8.45	Si
ini.	2	1100	-629.88	1726.01	SLV 1	2.74	Si
fin.	2	-2748	568.35	1726.01	SLV 1	3.04	Si

Verifiche a taglio delle travi in muratura secondo §C8.7.1.3.1 in combinazioni sismiche

Sezione	γM	N	M	V	Vt	Vp	Vt fess. diag.	Vt,lim	Comb.	c.s.	Verifica
ini.	2	-2278	735.09	-2385			2130	826	SLV 14	0.35	No
fin.	2	1197	-255.66	-1804			1310	110	SLV 14	0.06	No
ini.	2	1100	-629.88	2588			1310	176	SLV 2	0.07	No
fin.	2	-2748	568.35	2587			2300	879	SLV 2	0.34	No
ini.	2	1816	-740.11	2781			1310	0	SLV 3	0	No
fin.	2	-2139	533.4	3015			2080	810	SLV 3	0.27	No
ini.	2	-1562	624.86	-2192			1872	738	SLV 15	0.34	No
fin.	2	1806	-290.6	-1376			1310	0	SLV 15	0	No
ini.	2	1469	-390.97	1265			1310	0	SLV 8	0	No
fin.	2	-48	204.22	1979			1327	502	SLV 8	0.25	No
ini.	2	1816	-740.11	2781			1310	0	SLV 4	0	No
fin.	2	-2139	533.4	3015			2080	810	SLV 4	0.27	No
ini.	2	-1562	624.86	-2192			1872	738	SLV 16	0.34	No
fin.	2	1806	-290.6	-1376			1310	0	SLV 16	0	No
ini.	2	-2278	735.09	-2385			2130	826	SLV 13	0.35	No
fin.	2	1197	-255.66	-1804			1310	110	SLV 13	0.06	No
ini.	2	1100	-629.88	2588			1310	176	SLV 1	0.07	No
fin.	2	-2748	568.35	2587			2300	879	SLV 1	0.34	No
ini.	2	1469	-390.97	1265			1310	0	SLV 7	0	No
fin.	2	-48	204.22	1979			1327	502	SLV 7	0.25	No

Tabella dei coefficienti di sicurezza minimi

Stato limite	Coeff.s.	Comb.	Verifica
PF_SLV	2.332	SLV 3	Si
V_SLV	0	SLV 3	No
PF_SLU	4.613	SLU 80	Si
V_SLU	0.332	SLU 48	No

Trave di accoppiamento 159

Verifiche condotte secondo D.M. 17-01-18 (N.T.C.)

Dati geometrici

X ini.	Y ini.	Z ini.inf.	Z ini.sup.	H ini.	X fin.	Y fin.	Z fin.inf.	Z fin.sup	H fin.	Luce	Spessore	R. Trazione
-17.796	6.536	14.25	14.6	0.35	-16.796	6.536	14.25	14.6	0.35	1	0.28	30000

Caratteristiche del materiale

(Circolare 7 21-01-19 C8.5.I) Muratura in mattoni pieni e malta di calce LC2_Corti

fb_	fhk	fvk0	fhmedio	τ0	fv0	μ	ϕ	fvk,lim	E	G	FC
120000			172500	9000	20000	0.577	0.767	6500	320000000	128000000	1.2

Verifiche a pressoflessione delle travi in muratura in combinazioni non sismiche

Sezione	γM	N	M	Mu	Comb.	c.s.	Verifica
ini.	3	-893	-4.87	174.02	SLU 56	35.72	Si
fin.	3	-788	-57.33	174.02	SLU 56	3.04	Si
ini.	3	-687	1.73	174.02	SLU 48	100.32	Si
fin.	3	-623	-58.95	174.02	SLU 48	2.95	Si
ini.	3	-896	-3.01	174.02	SLU 70	57.8	Si
fin.	3	-779	-60.12	174.02	SLU 70	2.89	Si
ini.	3	-714	1.13	174.02	SLU 49	153.84	Si
fin.	3	-642	-58.87	174.02	SLU 49	2.96	Si
ini.	3	-1075	-9.01	174.02	SLU 77	19.31	Si
fin.	3	-925	-58.58	174.02	SLU 77	2.97	Si
ini.	3	-920	-5.48	174.02	SLU 57	31.78	Si
fin.	3	-807	-57.25	174.02	SLU 57	3.04	Si
ini.	3	-938	-16.86	174.02	SLU 66	10.32	Si
fin.	3	-820	-55.19	174.02	SLU 66	3.15	Si
ini.	3	-965	-17.46	174.02	SLU 67	9.97	Si
fin.	3	-839	-55.11	174.02	SLU 67	3.16	Si
ini.	3	-869	-2.41	174.02	SLU 69	72.29	Si
fin.	3	-760	-60.2	174.02	SLU 69	2.89	Si
ini.	3	-1102	-9.62	174.02	SLU 78	18.1	Si
fin.	3	-944	-58.5	174.02	SLU 78	2.97	Si

Verifiche a taglio delle travi in muratura secondo §C8.7.1.3.1 in combinazioni non sismiche

Sezione	γM	N	M	V	Vt	Vp	Vt fess. diag.	Vt,lim	Comb.	c.s.	Verifica
ini.	3	-869	-2.41	133			483	181	SLU 69	1.37	Si
fin.	3	-760	-60.2	-634			454	173	SLU 69	0.27	No

Sezione	γM	N	M	V	Vt	Vp	Vt fess. diag.	Vt,lim	Comb.	c.s.	Verifica
ini.	3	-687	1.73	118			435	167	SLU 48	1.41	Si
fin.	3	-623	-58.95	-608			418	161	SLU 48	0.27	No
ini.	3	-742	0.02	100			450	171	SLU 27	1.71	Si
fin.	3	-641	-51.78	-560			423	163	SLU 27	0.29	No
ini.	3	-714	1.13	120			442	169	SLU 49	1.4	Si
fin.	3	-642	-58.87	-606			423	163	SLU 49	0.27	No
ini.	3	-560	4.17	86			401	156	SLU 6	1.82	Si
fin.	3	-504	-50.53	-534			386	151	SLU 6	0.28	No
ini.	3	-896	-3.01	135			491	183	SLU 70	1.36	Si
fin.	3	-779	-60.12	-632			459	174	SLU 70	0.28	No
ini.	3	-802	9.49	56			465	176	SLU 71	3.16	Si
fin.	3	-687	-49.19	-576			435	167	SLU 71	0.29	No
ini.	3	-647	13.03	44			424	163	SLU 51	3.75	Si
fin.	3	-569	-47.86	-548			403	157	SLU 51	0.29	No
ini.	3	-587	3.56	88			408	158	SLU 7	1.8	Si
fin.	3	-523	-50.45	-532			391	153	SLU 7	0.29	No
ini.	3	-620	13.63	41			417	161	SLU 50	3.91	Si
fin.	3	-550	-47.94	-550			398	155	SLU 50	0.28	No

Verifiche a pressoflessione delle travi in muratura in combinazioni sismiche

Sezione	γM	N	M	Mu	Comb.	c.s.	Verifica
ini.	2	-713	-369.25	261.03	SLV 4	0.71	No
fin.	2	2088	153.99	261.03	SLV 4	1.7	Si
ini.	2	-771	337.43	261.03	SLV 14	0.77	No
fin.	2	-3363	-212.77	261.03	SLV 14	1.23	Si
ini.	2	11	-334.07	261.03	SLV 1	0.78	No
fin.	2	2769	182.05	261.03	SLV 1	1.43	Si
ini.	2	-1494	302.25	261.03	SLV 15	0.86	No
fin.	2	-4044	-240.83	261.03	SLV 15	1.08	Si
ini.	2	-1830	-175.27	261.03	SLV 8	1.49	Si
fin.	2	-853	-16.94	261.03	SLV 8	15.41	Si
ini.	2	-1494	302.25	261.03	SLV 16	0.86	No
fin.	2	-4044	-240.83	261.03	SLV 16	1.08	Si
ini.	2	-771	337.43	261.03	SLV 13	0.77	No
fin.	2	-3363	-212.77	261.03	SLV 13	1.23	Si
ini.	2	11	-334.07	261.03	SLV 2	0.78	No
fin.	2	2769	182.05	261.03	SLV 2	1.43	Si
ini.	2	-1830	-175.27	261.03	SLV 7	1.49	Si
fin.	2	-853	-16.94	261.03	SLV 7	15.41	Si
ini.	2	-713	-369.25	261.03	SLV 3	0.71	No
fin.	2	2088	153.99	261.03	SLV 3	1.7	Si

Verifiche a taglio delle travi in muratura secondo §C8.7.1.3.1 in combinazioni sismiche

Sezione	γM	N	M	V	Vt	Vp	Vt fess. diag.	Vt,lim	Comb.	c.s.	Verifica
ini.	2	-771	337.43	-717			583	228	SLV 13	0.32	No
fin.	2	-3363	-212.77	-880			1274	398	SLV 13	0.45	No
ini.	2	11	-334.07	775			377	140	SLV 1	0.18	No
fin.	2	2769	182.05	508			377	0	SLV 1	0	No
ini.	2	347	143.45	-439			377	77	SLV 10	0.18	No
fin.	2	-422	-41.85	-177			490	194	SLV 10	1.1	Si
ini.	2	-771	337.43	-717			583	228	SLV 14	0.32	No
fin.	2	-3363	-212.77	-880			1274	398	SLV 14	0.45	No
ini.	2	581	-58	9			377	0	SLV 6	0	No
fin.	2	1417	76.6	240			377	0	SLV 6	0	No
ini.	2	347	143.45	-439			377	77	SLV 9	0.18	No
fin.	2	-422	-41.85	-177			490	194	SLV 9	1.1	Si
ini.	2	-713	-369.25	983			567	223	SLV 3	0.23	No
fin.	2	2088	153.99	322			377	0	SLV 3	0	No
ini.	2	11	-334.07	775			377	140	SLV 2	0.18	No
fin.	2	2769	182.05	508			377	0	SLV 2	0	No
ini.	2	581	-58	9			377	0	SLV 5	0	No
fin.	2	1417	76.6	240			377	0	SLV 5	0	No
ini.	2	-713	-369.25	983			567	223	SLV 4	0.23	No
fin.	2	2088	153.99	322			377	0	SLV 4	0	No

Tabella dei coefficienti di sicurezza minimi

Stato limite	Coeff.s.	Comb.	Verifica
PF_SLV	0.707	SLV 3	No
V_SLV	0	SLV 1	No
PF_SLU	2.891	SLU 69	Si
V_SLU	0.265	SLU 48	No

Trave di accoppiamento 160

Verifiche condotte secondo D.M. 17-01-18 (N.T.C.)

Dati geometrici

X ini.	Y ini.	Z ini.inf.	Z ini.sup.	H ini.	X fin.	Y fin.	Z fin.inf.	Z fin.sup	H fin.	Luce	Spessore	R. Trazione
-12.901	6.536	11.45	12.35	0.9	-11.901	6.536	11.45	12.35	0.9	1	0.28	30000

Caratteristiche del materiale

(Circolare 7 21-01-19 C8.5.I) Muratura in mattoni pieni e malta di calce LC2_Corti

fb_	fhk	fvk0	fhmedio	τ0	fv0	μ	ϕ	fvk,lim	E	G	FC
120000			172500	9000	20000	0.577	0.767	6500	320000000	128000000	1.2

Verifiche a pressoflessione delle travi in muratura in combinazioni non sismiche

Sezione	γM	N	M	Mu	Comb.	c.s.	Verifica
ini.	3	-728	110.84	1150.68	SLU 70	10.38	Si
fin.	3	-774	117.22	1150.68	SLU 70	9.82	Si
ini.	3	-746	107.68	1150.68	SLU 80	10.69	Si
fin.	3	-798	115.71	1150.68	SLU 80	9.94	Si
ini.	3	-720	110.14	1150.68	SLU 72	10.45	Si
fin.	3	-762	115.14	1150.68	SLU 72	9.99	Si
ini.	3	-753	107.82	1150.68	SLU 79	10.67	Si
fin.	3	-807	117.2	1150.68	SLU 79	9.82	Si
ini.	3	-760	108.52	1150.68	SLU 77	10.6	Si
fin.	3	-820	119.28	1150.68	SLU 77	9.65	Si
ini.	3	-754	108.37	1150.68	SLU 78	10.62	Si
fin.	3	-811	117.78	1150.68	SLU 78	9.77	Si
ini.	3	-729	105.83	1150.68	SLU 56	10.87	Si
fin.	3	-785	116.56	1150.68	SLU 56	9.87	Si
ini.	3	-727	110.28	1150.68	SLU 71	10.43	Si
fin.	3	-771	116.64	1150.68	SLU 71	9.87	Si
ini.	3	-703	108.3	1150.68	SLU 48	10.63	Si
fin.	3	-748	116	1150.68	SLU 48	9.92	Si
ini.	3	-734	110.98	1150.68	SLU 69	10.37	Si
fin.	3	-783	118.71	1150.68	SLU 69	9.69	Si

Verifiche a taglio delle travi in muratura secondo §C8.7.1.3.1 in combinazioni non sismiche

Sezione	γM	N	M	V	Vt	Vp	Vt fess. diag.	Vt,lim	Comb.	c.s.	Verifica
ini.	3	-734	110.98	-312			1138	450	SLU 69	1.44	Si
fin.	3	-783	118.71	364			1155	457	SLU 69	1.25	Si
ini.	3	-727	110.28	-297			1135	449	SLU 71	1.51	Si
fin.	3	-771	116.64	342			1151	455	SLU 71	1.33	Si
ini.	3	-703	108.3	-313			1127	446	SLU 48	1.42	Si
fin.	3	-748	116	364			1143	452	SLU 48	1.24	Si
ini.	3	-728	110.84	-313			1136	449	SLU 70	1.43	Si
fin.	3	-774	117.22	361			1152	456	SLU 70	1.26	Si
ini.	3	-720	110.14	-298			1133	448	SLU 72	1.5	Si
fin.	3	-762	115.14	338			1148	454	SLU 72	1.34	Si
ini.	3	-729	105.83	-274			1136	449	SLU 56	1.64	Si
fin.	3	-785	116.56	337			1156	457	SLU 56	1.36	Si
ini.	3	-689	107.46	-299			1122	444	SLU 51	1.48	Si
fin.	3	-727	112.43	338			1135	449	SLU 51	1.33	Si
ini.	3	-695	107.6	-298			1124	444	SLU 50	1.49	Si
fin.	3	-736	113.93	342			1138	450	SLU 50	1.32	Si
ini.	3	-723	105.69	-275			1134	448	SLU 57	1.63	Si
fin.	3	-776	115.07	333			1153	456	SLU 57	1.37	Si
ini.	3	-697	108.15	-315			1124	445	SLU 49	1.41	Si
fin.	3	-739	114.5	361			1140	451	SLU 49	1.25	Si

Verifiche a pressoflessione delle travi in muratura in combinazioni sismiche

Sezione	γM	N	M	Mu	Comb.	c.s.	Verifica
ini.	2	-2248	354.01	1726.01	SLV 10	4.88	Si
fin.	2	-1702	67.5	1726.01	SLV 10	25.57	Si
ini.	2	-2248	354.01	1726.01	SLV 9	4.88	Si
fin.	2	-1702	67.5	1726.01	SLV 9	25.57	Si
ini.	2	-1039	497.38	1726.01	SLV 16	3.47	Si
fin.	2	789	-430.21	1726.01	SLV 16	4.01	Si
ini.	2	97	-382.35	1726.01	SLV 1	4.51	Si
fin.	2	-1850	577.6	1726.01	SLV 1	2.99	Si
ini.	2	-1039	497.38	1726.01	SLV 15	3.47	Si
fin.	2	789	-430.21	1726.01	SLV 15	4.01	Si
ini.	2	982	-472.92	1726.01	SLV 4	3.65	Si
fin.	2	-987	497.8	1726.01	SLV 4	3.47	Si
ini.	2	-1923	587.95	1726.01	SLV 14	2.94	Si
fin.	2	-74	-350.41	1726.01	SLV 14	4.93	Si
ini.	2	97	-382.35	1726.01	SLV 2	4.51	Si
fin.	2	-1850	577.6	1726.01	SLV 2	2.99	Si
ini.	2	-1923	587.95	1726.01	SLV 13	2.94	Si
fin.	2	-74	-350.41	1726.01	SLV 13	4.93	Si
ini.	2	982	-472.92	1726.01	SLV 3	3.65	Si
fin.	2	-987	497.8	1726.01	SLV 3	3.47	Si

Verifiche a taglio delle travi in muratura secondo §C8.7.1.3.1 in combinazioni sismiche

Sezione	γM	N	M	V	Vt	Vp	Vt fess. diag.	Vt,lim	Comb.	c.s.	Verifica
ini.	2	97	-382.35	1797			1310	474	SLV 2	0.26	No
fin.	2	-1850	577.6	1929			1976	775	SLV 2	0.4	No
ini.	2	-1923	587.95	-1764			2003	784	SLV 14	0.44	No
fin.	2	-74	-350.41	-1780			1337	507	SLV 14	0.28	No
ini.	2	97	-382.35	1797			1310	474	SLV 1	0.26	No
fin.	2	-1850	577.6	1929			1976	775	SLV 1	0.4	No
ini.	2	1306	-238.98	47			1310	0	SLV 8	0	No
fin.	2	642	79.9	1081			1310	345	SLV 8	0.32	No
ini.	2	1306	-238.98	47			1310	0	SLV 7	0	No
fin.	2	642	79.9	1081			1310	345	SLV 7	0.32	No
ini.	2	982	-472.92	1564			1310	232	SLV 4	0.15	No
fin.	2	-987	497.8	2137			1665	658	SLV 4	0.31	No
ini.	2	982	-472.92	1564			1310	232	SLV 3	0.15	No
fin.	2	-987	497.8	2137			1665	658	SLV 3	0.31	No
ini.	2	-1039	497.38	-1997			1684	666	SLV 16	0.33	No
fin.	2	789	-430.21	-1572			1310	301	SLV 16	0.19	No
ini.	2	-1923	587.95	-1764			2003	784	SLV 13	0.44	No
fin.	2	-74	-350.41	-1780			1337	507	SLV 13	0.28	No
ini.	2	-1039	497.38	-1997			1684	666	SLV 15	0.33	No
fin.	2	789	-430.21	-1572			1310	301	SLV 15	0.19	No

Tabella dei coefficienti di sicurezza minimi

Stato limite	Coeff.s.	Comb.	Verifica
PF_SLV	2.936	SLV 13	Si
V_SLV	0	SLV 7	No
PF_SLU	9.647	SLU 77	Si
V_SLU	1.241	SLU 48	Si

Trave di accoppiamento 161

Verifiche condotte secondo D.M. 17-01-18 (N.T.C.)

Dati geometrici

X ini.	Y ini.	Z ini.inf.	Z ini.sup.	H ini.	X fin.	Y fin.	Z fin.inf.	Z fin.sup	H fin.	Luce	Spessore	R. Trazione
-12.901	6.536	14.25	14.6	0.35	-11.901	6.536	14.25	14.6	0.35	1	0.28	30000

Caratteristiche del materiale

(Circolare 7 21-01-19 C8.5.I) Muratura in mattoni pieni e malta di calce LC2_Corti

fb_	fhk	fvk0	fhmedio	τ0	fv0	μ	ϕ	fvk,lim	E	G	FC
120000			172500	9000	20000	0.577	0.767	6500	320000000	128000000	1.2

Verifiche a pressoflessione delle travi in muratura in combinazioni non sismiche

Sezione	γM	N	M	Mu	Comb.	c.s.	Verifica
ini.	3	-824	-44.33	174.02	SLU 56	3.93	Si
fin.	3	-769	-12.57	174.02	SLU 56	13.85	Si
ini.	3	-713	-43.07	174.02	SLU 67	4.04	Si
fin.	3	-667	-16.67	174.02	SLU 67	10.44	Si
ini.	3	-866	-46.99	174.02	SLU 78	3.7	Si
fin.	3	-803	-11.81	174.02	SLU 78	14.73	Si
ini.	3	-721	-43.37	174.02	SLU 66	4.01	Si
fin.	3	-674	-16.62	174.02	SLU 66	10.47	Si
ini.	3	-815	-44.04	174.02	SLU 57	3.95	Si
fin.	3	-762	-12.62	174.02	SLU 57	13.79	Si
ini.	3	-757	-45.07	174.02	SLU 74	3.86	Si
fin.	3	-700	-15.88	174.02	SLU 74	10.96	Si
ini.	3	-829	-45.29	174.02	SLU 70	3.84	Si
fin.	3	-776	-12.56	174.02	SLU 70	13.86	Si
ini.	3	-874	-47.28	174.02	SLU 77	3.68	Si
fin.	3	-810	-11.76	174.02	SLU 77	14.79	Si
ini.	3	-838	-45.58	174.02	SLU 69	3.82	Si
fin.	3	-784	-12.51	174.02	SLU 69	13.91	Si
ini.	3	-749	-44.77	174.02	SLU 75	3.89	Si
fin.	3	-693	-15.93	174.02	SLU 75	10.92	Si

Verifiche a taglio delle travi in muratura secondo §C8.7.1.3.1 in combinazioni non sismiche

Sezione	γM	N	M	V	Vt	Vp	Vt fess. diag.	Vt,lim	Comb.	c.s.	Verifica
ini.	3	-838	-45.58	379			475	179	SLU 69	0.47	No
fin.	3	-784	-12.51	-234			461	175	SLU 69	0.75	No
ini.	3	-874	-47.28	384			485	182	SLU 77	0.47	No
fin.	3	-810	-11.76	-230			468	177	SLU 77	0.77	No
ini.	3	-713	-43.07	343			442	169	SLU 67	0.49	No
fin.	3	-667	-16.67	-230			429	165	SLU 67	0.72	No
ini.	3	-829	-45.29	379			473	178	SLU 70	0.47	No
fin.	3	-776	-12.56	-235			459	174	SLU 70	0.74	No
ini.	3	-721	-43.37	343			444	170	SLU 66	0.49	No
fin.	3	-674	-16.62	-229			431	166	SLU 66	0.72	No
ini.	3	-824	-44.33	361			471	178	SLU 56	0.49	No
fin.	3	-769	-12.57	-223			457	173	SLU 56	0.78	No
ini.	3	-866	-46.99	383			482	181	SLU 78	0.47	No
fin.	3	-803	-11.81	-230			466	176	SLU 78	0.76	No
ini.	3	-815	-44.04	361			469	177	SLU 57	0.49	No
fin.	3	-762	-12.62	-224			455	173	SLU 57	0.77	No
ini.	3	-787	-42.63	357			462	175	SLU 48	0.49	No
fin.	3	-743	-13.31	-228			450	171	SLU 48	0.75	No
ini.	3	-779	-42.34	356			459	174	SLU 49	0.49	No
fin.	3	-735	-13.36	-228			448	171	SLU 49	0.75	No

Verifiche a pressoflessione delle travi in muratura in combinazioni sismiche

Sezione	γM	N	M	Mu	Comb.	c.s.	Verifica
ini.	2	-2749	-184.71	261.03	SLV 16	1.41	Si
fin.	2	-339	75.95	261.03	SLV 16	3.44	Si
ini.	2	1815	131.64	261.03	SLV 1	1.98	Si
fin.	2	-533	-97.07	261.03	SLV 1	2.69	Si
ini.	2	-92	108.97	261.03	SLV 4	2.4	Si
fin.	2	-2515	-134.1	261.03	SLV 4	1.95	Si
ini.	2	1815	131.64	261.03	SLV 2	1.98	Si
fin.	2	-533	-97.07	261.03	SLV 2	2.69	Si
ini.	2	-4045	-108.36	261.03	SLV 11	2.41	Si
fin.	2	-3413	-40.76	261.03	SLV 11	6.4	Si
ini.	2	-842	-162.04	261.03	SLV 14	1.61	Si
fin.	2	1643	112.98	261.03	SLV 14	2.31	Si
ini.	2	-4045	-108.36	261.03	SLV 12	2.41	Si
fin.	2	-3413	-40.76	261.03	SLV 12	6.4	Si
ini.	2	-842	-162.04	261.03	SLV 13	1.61	Si
fin.	2	1643	112.98	261.03	SLV 13	2.31	Si
ini.	2	-2749	-184.71	261.03	SLV 15	1.41	Si
fin.	2	-339	75.95	261.03	SLV 15	3.44	Si
ini.	2	-92	108.97	261.03	SLV 3	2.4	Si

Sezione	γM	N	M	Mu	Comb.	c.s.	Verifica
fin.	2	-2515	-134.1	261.03	SLV 3	1.95	Si

Verifiche a taglio delle travi in muratura secondo §C8.7.1.3.1 in combinazioni sismiche

Sezione	γM	N	M	V	Vt	Vp	Vt fess. diag.	Vt,lim	Comb.	c.s.	Verifica
ini.	2	-842	-162.04	-687			602	234	SLV 14	0.34	No
fin.	2	1643	112.98	-830			377	0	SLV 14	0	No
ini.	2	1815	131.64	954			377	0	SLV 2	0	No
fin.	2	-533	-97.07	712			520	205	SLV 2	0.29	No
ini.	2	3111	55.29	217			377	0	SLV 5	0	No
fin.	2	2540	19.64	358			377	0	SLV 5	0	No
ini.	2	-842	-162.04	-687			602	234	SLV 13	0.34	No
fin.	2	1643	112.98	-830			377	0	SLV 13	0	No
ini.	2	-92	108.97	1094			402	155	SLV 4	0.14	No
fin.	2	-2515	-134.1	553			1048	352	SLV 4	0.64	No
ini.	2	-92	108.97	1094			402	155	SLV 3	0.14	No
fin.	2	-2515	-134.1	553			1048	352	SLV 3	0.64	No
ini.	2	1815	131.64	954			377	0	SLV 1	0	No
fin.	2	-533	-97.07	712			520	205	SLV 1	0.29	No
ini.	2	2314	-32.82	-275			377	0	SLV 9	0	No
fin.	2	3193	82.66	-104			377	0	SLV 9	0	No
ini.	2	2314	-32.82	-275			377	0	SLV 10	0	No
fin.	2	3193	82.66	-104			377	0	SLV 10	0	No
ini.	2	3111	55.29	217			377	0	SLV 6	0	No
fin.	2	2540	19.64	358			377	0	SLV 6	0	No

Tabella dei coefficienti di sicurezza minimi

Stato limite	Coeff.s.	Comb.	Verifica
PF_SLV	1.413	SLV 15	Si
V_SLV	0	SLV 1	No
PF_SLU	3.68	SLU 77	Si
V_SLU	0.47	SLU 70	No

Trave di accoppiamento 162

Verifiche condotte secondo D.M. 17-01-18 (N.T.C.)

Dati geometrici

X ini.	Y ini.	Z ini.inf.	Z ini.sup.	H ini.	X fin.	Y fin.	Z fin.inf.	Z fin.sup	H fin.	Luce	Spessore	R. Trazione
-8.007	6.536	11.45	12.35	0.9	-7.007	6.536	11.45	12.35	0.9	1	0.28	30000

Caratteristiche del materiale

(Circolare 7 21-01-19 C8.5.I) Muratura in mattoni pieni e malta di calce LC2_Corti

fb_	fhk	fvk0	fhmedio	τ0	fv0	μ	ϕ	fvk,lim	E	G	FC
120000			172500	9000	20000	0.577	0.767	6500	320000000	128000000	1.2

Verifiche a pressoflessione delle travi in muratura in combinazioni non sismiche

Sezione	γM	N	M	Mu	Comb.	c.s.	Verifica
ini.	3	-383	147.42	1150.68	SLU 39	7.81	Si
fin.	3	-171	15.21	1150.68	SLU 39	75.67	Si
ini.	3	-318	148.54	1150.68	SLU 74	7.75	Si
fin.	3	-45	7.1	1150.68	SLU 74	162.16	Si
ini.	3	-394	155.16	1150.68	SLU 73	7.42	Si
fin.	3	-152	19.59	1150.68	SLU 73	58.74	Si
ini.	3	-358	156.04	1150.68	SLU 84	7.37	Si
fin.	3	-79	4.37	1150.68	SLU 84	263.2	Si
ini.	3	-381	147.59	1150.68	SLU 40	7.8	Si
fin.	3	-171	16.21	1150.68	SLU 40	70.98	Si
ini.	3	-386	145.8	1150.68	SLU 61	7.89	Si
fin.	3	-159	21.33	1150.68	SLU 61	53.95	Si
ini.	3	-360	155.87	1150.68	SLU 83	7.38	Si
fin.	3	-78	3.37	1150.68	SLU 83	341.91	Si
ini.	3	-433	166.54	1150.68	SLU 81	6.91	Si
fin.	3	-180	19.2	1150.68	SLU 81	59.93	Si
ini.	3	-431	166.71	1150.68	SLU 82	6.9	Si
fin.	3	-180	20.21	1150.68	SLU 82	56.95	Si
ini.	3	-316	148.71	1150.68	SLU 75	7.74	Si
fin.	3	-45	8.1	1150.68	SLU 75	142.01	Si

Verifiche a taglio delle travi in muratura secondo §C8.7.1.3.1 in combinazioni non sismiche

Sezione	γM	N	M	V	Vt	Vp	Vt fess. diag.	Vt,lim	Comb.	c.s.	Verifica
ini.	3	-123	85.39	-652			918	352	SLU 50	0.54	No
fin.	3	140	-15.64	-21			873	300	SLU 50	14.36	Si
ini.	3	-116	89.73	-698			915	351	SLU 48	0.5	No
fin.	3	145	-10.62	14			873	299	SLU 48	21.89	Si
ini.	3	-121	85.56	-651			917	351	SLU 51	0.54	No
fin.	3	139	-14.63	-18			873	300	SLU 51	16.3	Si
ini.	3	-159	110.81	-659			931	359	SLU 70	0.54	No
fin.	3	123	-10.74	-58			873	304	SLU 70	5.23	Si
ini.	3	-162	110.64	-660			932	359	SLU 69	0.54	No
fin.	3	124	-11.74	-60			873	304	SLU 69	5.02	Si
ini.	3	-114	89.9	-697			915	350	SLU 49	0.5	No
fin.	3	144	-9.62	16			873	299	SLU 49	18.53	Si
ini.	3	-190	100.41	-635			942	364	SLU 45	0.57	No
fin.	3	43	5.21	-1			873	320	SLU 45	410.61	Si
ini.	3	-168	106.3	-613			934	360	SLU 71	0.59	No
fin.	3	119	-16.76	-95			873	305	SLU 71	3.2	Si
ini.	3	-166	106.47	-612			933	360	SLU 72	0.59	No

Sezione	γM	N	M	V	Vt	Vp	Vt fess. diag.	Vt,lim	Comb.	c.s.	Verifica
fin.	3	118	-15.76	-93			873	305	SLU 72	3.29	Si
ini.	3	-187	100.57	-634			941	364	SLU 46	0.57	No
fin.	3	43	6.22	2			873	320	SLU 46	188.01	Si

Verifiche a pressoflessione delle travi in muratura in combinazioni sismiche

Sezione	γM	N	M	Mu	Comb.	c.s.	Verifica
ini.	2	-763	41.37	1726.01	SLV 5	41.72	Si
fin.	2	-1409	272.92	1726.01	SLV 5	6.32	Si
ini.	2	1133	-267.16	1726.01	SLV 1	6.46	Si
fin.	2	-1957	684.44	1726.01	SLV 1	2.52	Si
ini.	2	-1645	469.92	1726.01	SLV 15	3.67	Si
fin.	2	1799	-659.29	1726.01	SLV 15	2.62	Si
ini.	2	-763	41.37	1726.01	SLV 6	41.72	Si
fin.	2	-1409	272.92	1726.01	SLV 6	6.32	Si
ini.	2	1742	-300.49	1726.01	SLV 4	5.74	Si
fin.	2	-1452	645.68	1726.01	SLV 4	2.67	Si
ini.	2	1742	-300.49	1726.01	SLV 3	5.74	Si
fin.	2	-1452	645.68	1726.01	SLV 3	2.67	Si
ini.	2	-2254	503.25	1726.01	SLV 13	3.43	Si
fin.	2	1294	-620.53	1726.01	SLV 13	2.78	Si
ini.	2	1133	-267.16	1726.01	SLV 2	6.46	Si
fin.	2	-1957	684.44	1726.01	SLV 2	2.52	Si
ini.	2	-1645	469.92	1726.01	SLV 16	3.67	Si
fin.	2	1799	-659.29	1726.01	SLV 16	2.62	Si
ini.	2	-2254	503.25	1726.01	SLV 14	3.43	Si
fin.	2	1294	-620.53	1726.01	SLV 14	2.78	Si

Verifiche a taglio delle travi in muratura secondo §C8.7.1.3.1 in combinazioni sismiche

Sezione	γM	N	M	V	Vt	Vp	Vt fess. diag.	Vt,lim	Comb.	c.s.	Verifica
ini.	2	1267	-69.73	-395			1310	0	SLV 7	0	No
fin.	2	275	143.72	483			1310	436	SLV 7	0.9	No
ini.	2	-2254	503.25	-2282			2122	823	SLV 14	0.36	No
fin.	2	1294	-620.53	-2424			1310	0	SLV 14	0	No
ini.	2	-1645	469.92	-2689			1902	749	SLV 15	0.28	No
fin.	2	1799	-659.29	-2490			1310	0	SLV 15	0	No
ini.	2	1267	-69.73	-395			1310	0	SLV 8	0	No
fin.	2	275	143.72	483			1310	436	SLV 8	0.9	No
ini.	2	1742	-300.49	1572			1310	0	SLV 4	0	No
fin.	2	-1452	645.68	2203			1833	723	SLV 4	0.33	No
ini.	2	251	161.39	-1674			1310	441	SLV 11	0.26	No
fin.	2	1250	-247.77	-925			1310	44	SLV 11	0.05	No
ini.	2	251	161.39	-1674			1310	441	SLV 12	0.26	No
fin.	2	1250	-247.77	-925			1310	44	SLV 12	0.05	No
ini.	2	1742	-300.49	1572			1310	0	SLV 3	0	No
fin.	2	-1452	645.68	2203			1833	723	SLV 3	0.33	No
ini.	2	-1645	469.92	-2689			1902	749	SLV 16	0.28	No
fin.	2	1799	-659.29	-2490			1310	0	SLV 16	0	No
ini.	2	-2254	503.25	-2282			2122	823	SLV 13	0.36	No
fin.	2	1294	-620.53	-2424			1310	0	SLV 13	0	No

Tabella dei coefficienti di sicurezza minimi

Stato limite	Coeff.s.	Comb.	Verifica
PF_SLV	2.522	SLV 1	Si
V_SLV	0	SLV 3	No
PF_SLU	6.902	SLU 82	Si
V_SLU	0.502	SLU 48	No

Trave di accoppiamento 163

Verifiche condotte secondo D.M. 17-01-18 (N.T.C.)

Dati geometrici

X ini.	Y ini.	Z ini.inf.	Z ini.sup.	H ini.	X fin.	Y fin.	Z fin.inf.	Z fin.sup	H fin.	Luce	Spessore	R. Trazione
-8.007	6.536	14.25	14.6	0.35	-7.007	6.536	14.25	14.6	0.35	1	0.28	30000

Caratteristiche del materiale

(Circolare 7 21-01-19 C8.5.I) Muratura in mattoni pieni e malta di calce LC2_Corti

fb_	fhk	fvk0	fhmedio	τ0	fv0	μ	ϕ	fvk,lim	E	G	FC
120000			172500	9000	20000	0.577	0.767	6500	320000000	128000000	1.2

Verifiche a pressoflessione delle travi in muratura in combinazioni non sismiche

Sezione	γM	N	M	Mu	Comb.	c.s.	Verifica
ini.	3	-644	-76.24	174.02	SLU 72	2.28	Si
fin.	3	-256	26.65	174.02	SLU 72	6.53	Si
ini.	3	-637	-76.61	174.02	SLU 71	2.27	Si
fin.	3	-242	27.22	174.02	SLU 71	6.39	Si
ini.	3	-739	-80.86	174.02	SLU 57	2.15	Si
fin.	3	-396	10.63	174.02	SLU 57	16.38	Si
ini.	3	-596	-83.09	174.02	SLU 49	2.09	Si
fin.	3	-207	17.29	174.02	SLU 49	10.06	Si
ini.	3	-848	-84.01	174.02	SLU 77	2.07	Si
fin.	3	-513	7.97	174.02	SLU 77	21.82	Si
ini.	3	-705	-86.24	174.02	SLU 69	2.02	Si
fin.	3	-325	14.64	174.02	SLU 69	11.89	Si
ini.	3	-589	-83.47	174.02	SLU 48	2.08	Si
fin.	3	-193	17.87	174.02	SLU 48	9.74	Si
ini.	3	-855	-83.63	174.02	SLU 78	2.08	Si

Sezione	γM	N	M	Mu	Comb.	c.s.	Verifica
fin.	3	-527	7.4	174.02	SLU 78	23.52	Si
ini.	3	-712	-85.86	174.02	SLU 70	2.03	Si
fin.	3	-339	14.07	174.02	SLU 70	12.37	Si
ini.	3	-732	-81.24	174.02	SLU 56	2.14	Si
fin.	3	-381	11.2	174.02	SLU 56	15.54	Si

Verifiche a taglio delle travi in muratura secondo §C8.7.1.3.1 in combinazioni non sismiche

Sezione	γM	N	M	V	Vt	Vp	Vt fess. diag.	Vt,lim	Comb.	c.s.	Verifica
ini.	3	-589	-83.47	509			409	159	SLU 48	0.31	No
fin.	3	-193	17.87	-149			303	119	SLU 48	0.8	No
ini.	3	-588	-75.36	458			409	158	SLU 27	0.35	No
fin.	3	-253	14.88	-132			319	126	SLU 27	0.96	No
ini.	3	-732	-81.24	492			447	170	SLU 56	0.35	No
fin.	3	-381	11.2	-166			353	139	SLU 56	0.84	No
ini.	3	-472	-72.59	442			378	148	SLU 6	0.34	No
fin.	3	-121	18.1	-115			284	111	SLU 6	0.97	No
ini.	3	-705	-86.24	525			440	168	SLU 69	0.32	No
fin.	3	-325	14.64	-166			338	134	SLU 69	0.8	No
ini.	3	-479	-72.22	440			379	149	SLU 7	0.34	No
fin.	3	-135	17.53	-117			288	113	SLU 7	0.96	No
ini.	3	-528	-73.46	444			392	153	SLU 51	0.34	No
fin.	3	-124	29.87	-75			285	111	SLU 51	1.48	Si
ini.	3	-712	-85.86	522			442	169	SLU 70	0.32	No
fin.	3	-339	14.07	-169			342	135	SLU 70	0.8	No
ini.	3	-521	-73.84	446			391	153	SLU 50	0.34	No
fin.	3	-110	30.45	-73			281	109	SLU 50	1.5	Si
ini.	3	-596	-83.09	507			411	159	SLU 49	0.31	No
fin.	3	-207	17.29	-151			307	121	SLU 49	0.8	No

Verifiche a pressoflessione delle travi in muratura in combinazioni sismiche

Sezione	γM	N	M	Mu	Comb.	c.s.	Verifica
ini.	2	1716	154.32	261.03	SLV 15	1.69	Si
fin.	2	-418	-323.42	261.03	SLV 15	0.81	No
ini.	2	-3673	-275.26	261.03	SLV 3	0.95	No
fin.	2	-1233	275.23	261.03	SLV 3	0.95	No
ini.	2	-2681	-173.67	261.03	SLV 8	1.5	Si
fin.	2	-1753	26.51	261.03	SLV 8	9.85	Si
ini.	2	1716	154.32	261.03	SLV 16	1.69	Si
fin.	2	-418	-323.42	261.03	SLV 16	0.81	No
ini.	2	-3673	-275.26	261.03	SLV 4	0.95	No
fin.	2	-1233	275.23	261.03	SLV 4	0.95	No
ini.	2	2482	196.11	261.03	SLV 14	1.33	Si
fin.	2	273	-289.83	261.03	SLV 14	0.9	No
ini.	2	-2681	-173.67	261.03	SLV 7	1.5	Si
fin.	2	-1753	26.51	261.03	SLV 7	9.85	Si
ini.	2	2482	196.11	261.03	SLV 13	1.33	Si
fin.	2	273	-289.83	261.03	SLV 13	0.9	No
ini.	2	-2907	-233.47	261.03	SLV 1	1.12	Si
fin.	2	-543	308.82	261.03	SLV 1	0.85	No
ini.	2	-2907	-233.47	261.03	SLV 2	1.12	Si
fin.	2	-543	308.82	261.03	SLV 2	0.85	No

Verifiche a taglio delle travi in muratura secondo §C8.7.1.3.1 in combinazioni sismiche

Sezione	γM	N	M	V	Vt	Vp	Vt fess. diag.	Vt,lim	Comb.	c.s.	Verifica
ini.	2	-127	-34.36	112			411	159	SLV 5	1.42	Si
fin.	2	548	138.49	470			377	0	SLV 5	0	No
ini.	2	-2907	-233.47	907			1153	374	SLV 2	0.41	No
fin.	2	-543	308.82	786			522	206	SLV 2	0.26	No
ini.	2	2482	196.11	-640			377	0	SLV 14	0	No
fin.	2	273	-289.83	-853			377	95	SLV 14	0.11	No
ini.	2	-2907	-233.47	907			1153	374	SLV 1	0.41	No
fin.	2	-543	308.82	786			522	206	SLV 1	0.26	No
ini.	2	2482	196.11	-640			377	0	SLV 13	0	No
fin.	2	273	-289.83	-853			377	95	SLV 13	0.11	No
ini.	2	1716	154.32	-424			377	0	SLV 15	0	No
fin.	2	-418	-323.42	-1074			489	193	SLV 15	0.18	No
ini.	2	1716	154.32	-424			377	0	SLV 16	0	No
fin.	2	-418	-323.42	-1074			489	193	SLV 16	0.18	No
ini.	2	1490	94.52	-352			377	0	SLV 9	0	No
fin.	2	793	-41.11	-22			377	0	SLV 9	0	No
ini.	2	-127	-34.36	112			411	159	SLV 6	1.42	Si
fin.	2	548	138.49	470			377	0	SLV 6	0	No
ini.	2	1490	94.52	-352			377	0	SLV 10	0	No
fin.	2	793	-41.11	-22			377	0	SLV 10	0	No

Tabella dei coefficienti di sicurezza minimi

Stato limite	Coeff.s.	Comb.	Verifica
PF_SLV	0.807	SLV 15	No
V_SLV	0	SLV 5	No
PF_SLU	2.018	SLU 69	Si
V_SLU	0.311	SLU 48	No

Trave di accoppiamento 164

Verifiche condotte secondo D.M. 17-01-18 (N.T.C.)

Dati geometrici

X ini.	Y ini.	Z ini.inf.	Z ini.sup.	H ini.	X fin.	Y fin.	Z fin.inf.	Z fin.sup	H fin.	Luce	Spessore	R. Trazione
-8.554	-3.248	13.55	14.6	1.05	-9.454	-3.248	13.55	14.6	1.05	0.9	0.28	30000

Caratteristiche del materiale

(Circolare 7 21-01-19 C8.5.I) Muratura in mattoni pieni e malta di calce LC2_Corti

fb_	fhk	fvk0	fhmedio	τ0	fv0	μ	ϕ	fvk,lim	E	G	FC
120000			172500	9000	20000	0.577	0.767	6500	320000000	128000000	1.2

Verifiche a pressoflessione delle travi in muratura in combinazioni non sismiche

Sezione	γM	N	M	Mu	Comb.	c.s.	Verifica
ini.	3	901	281.47	1566.2	SLU 37	5.56	Si
fin.	3	29	-473.07	1566.2	SLU 37	3.31	Si
ini.	3	857	289.92	1566.2	SLU 35	5.4	Si
fin.	3	-47	-484.7	1566.2	SLU 35	3.23	Si
ini.	3	1041	298.93	1566.2	SLU 79	5.24	Si
fin.	3	82	-518.14	1566.2	SLU 79	3.02	Si
ini.	3	1133	280.8	1566.2	SLU 78	5.58	Si
fin.	3	100	-497.68	1566.2	SLU 78	3.15	Si
ini.	3	1176	272.35	1566.2	SLU 80	5.75	Si
fin.	3	176	-486.06	1566.2	SLU 80	3.22	Si
ini.	3	1000	316.05	1566.2	SLU 83	4.96	Si
fin.	3	55	-508.61	1566.2	SLU 83	3.08	Si
ini.	3	934	308.71	1566.2	SLU 81	5.07	Si
fin.	3	53	-472.15	1566.2	SLU 81	3.32	Si
ini.	3	932	300.03	1566.2	SLU 74	5.22	Si
fin.	3	4	-493.29	1566.2	SLU 74	3.18	Si
ini.	3	998	307.38	1566.2	SLU 77	5.1	Si
fin.	3	6	-529.76	1566.2	SLU 77	2.96	Si
ini.	3	1135	289.48	1566.2	SLU 84	5.41	Si
fin.	3	149	-476.54	1566.2	SLU 84	3.29	Si

Verifiche a taglio delle travi in muratura secondo §C8.7.1.3.1 in combinazioni non sismiche

Sezione	γM	N	M	V	Vt	Vp	Vt fess. diag.	Vt,lim	Comb.	c.s.	Verifica
ini.	3	1029	119.49	-294			1132	0	SLU 47	0	No
fin.	3	337	-278.03	-1282			1132	345	SLU 47	0.27	No
ini.	3	1005	144.55	-390			1132	0	SLU 51	0	No
fin.	3	276	-335.89	-1455			1132	361	SLU 51	0.25	No
ini.	3	992	263.34	-802			1132	0	SLU 36	0	No
fin.	3	48	-452.62	-1850			1132	416	SLU 36	0.22	No
ini.	3	1019	210.11	-562			1132	0	SLU 57	0	No
fin.	3	143	-410.39	-1757			1132	394	SLU 57	0.22	No
ini.	3	1021	169.25	-427			1132	0	SLU 52	0	No
fin.	3	277	-304.44	-1340			1132	361	SLU 52	0.27	No
ini.	3	1087	176.59	-494			1132	0	SLU 55	0	No
fin.	3	279	-340.91	-1480			1132	360	SLU 55	0.24	No
ini.	3	1035	254.89	-831			1132	0	SLU 38	0	No
fin.	3	124	-441	-1747			1132	398	SLU 38	0.23	No
ini.	3	1063	201.66	-591			1132	0	SLU 59	0	No
fin.	3	219	-398.77	-1654			1132	376	SLU 59	0.23	No
ini.	3	1000	316.05	-897			1132	0	SLU 83	0	No
fin.	3	55	-508.61	-1946			1132	414	SLU 83	0.21	No
ini.	3	995	272.02	-849			1132	0	SLU 42	0	No
fin.	3	97	-431.48	-1692			1132	404	SLU 42	0.24	No

Verifiche a pressoflessione delle travi in muratura in combinazioni sismiche

Sezione	γM	N	M	Mu	Comb.	c.s.	Verifica
ini.	2	-669	-1343.71	2349.3	SLV 15	1.75	Si
fin.	2	293	777.55	2349.3	SLV 15	3.02	Si
ini.	2	-716	1546.22	2349.3	SLV 6	1.52	Si
fin.	2	-1780	-598.22	2349.3	SLV 6	3.93	Si
ini.	2	2009	-1195.23	2349.3	SLV 11	1.97	Si
fin.	2	1973	12.48	2349.3	SLV 11	188.28	Si
ini.	2	1962	1694.69	2349.3	SLV 2	1.39	Si
fin.	2	-100	-1363.3	2349.3	SLV 2	1.72	Si
ini.	2	-669	-1343.71	2349.3	SLV 16	1.75	Si
fin.	2	293	777.55	2349.3	SLV 16	3.02	Si
ini.	2	-716	1546.22	2349.3	SLV 5	1.52	Si
fin.	2	-1780	-598.22	2349.3	SLV 5	3.93	Si
ini.	2	1962	1694.69	2349.3	SLV 1	1.39	Si
fin.	2	-100	-1363.3	2349.3	SLV 1	1.72	Si
ini.	2	2009	-1195.23	2349.3	SLV 12	1.97	Si
fin.	2	1973	12.48	2349.3	SLV 12	188.28	Si
ini.	2	3120	1091.42	2349.3	SLV 4	2.15	Si
fin.	2	1098	-1373.7	2349.3	SLV 4	1.71	Si
ini.	2	3120	1091.42	2349.3	SLV 3	2.15	Si
fin.	2	1098	-1373.7	2349.3	SLV 3	1.71	Si

Verifiche a taglio delle travi in muratura secondo §C8.7.1.3.1 in combinazioni sismiche

Sezione	γM	N	M	V	Vt	Vp	Vt fess. diag.	Vt,lim	Comb.	c.s.	Verifica
ini.	2	3146	-464.69	-1206			1698	0	SLV 7	0	No
fin.	2	2215	-632.9	-1251			1698	0	SLV 7	0	No
ini.	2	-669	-1343.71	3005			1966	771	SLV 16	0.26	No
fin.	2	293	777.55	2530			1698	572	SLV 16	0.23	No
ini.	2	3146	-464.69	-1206			1698	0	SLV 8	0	No
fin.	2	2215	-632.9	-1251			1698	0	SLV 8	0	No
ini.	2	2009	-1195.23	810			1698	0	SLV 12	0	No
fin.	2	1973	12.48	797			1698	0	SLV 12	0	No
ini.	2	1962	1694.69	-3847			1698	0	SLV 2	0	No
fin.	2	-100	-1363.3	-4854			1738	661	SLV 2	0.14	No

Sezione	γM	N	M	V	Vt	Vp	Vt fess. diag.	Vt,lim	Comb.	c.s.	Verifica
ini.	2	2009	-1195.23	810			1698	0	SLV 11	0	No
fin.	2	1973	12.48	797			1698	0	SLV 11	0	No
ini.	2	-669	-1343.71	3005			1966	771	SLV 15	0.26	No
fin.	2	293	777.55	2530			1698	572	SLV 15	0.23	No
ini.	2	1962	1694.69	-3847			1698	0	SLV 1	0	No
fin.	2	-100	-1363.3	-4854			1738	661	SLV 1	0.14	No
ini.	2	3120	1091.42	-3713			1698	0	SLV 3	0	No
fin.	2	1098	-1373.7	-4293			1698	321	SLV 3	0.07	No
ini.	2	3120	1091.42	-3713			1698	0	SLV 4	0	No
fin.	2	1098	-1373.7	-4293			1698	321	SLV 4	0.07	No

Tabella dei coefficienti di sicurezza minimi

Stato limite	Coeff.s.	Comb.	Verifica
PF_SLV	1.386	SLV 1	Si
V_SLV	0	SLV 1	No
PF_SLU	2.956	SLU 77	Si
V_SLU	0	SLU 26	No

Trave di accoppiamento 165

Verifiche condotte secondo D.M. 17-01-18 (N.T.C.)

Dati geometrici

X ini.	Y ini.	Z ini.inf.	Z ini.sup.	H ini.	X fin.	Y fin.	Z fin.inf.	Z fin.sup	H fin.	Luce	Spessore	R. Trazione
-5.158	1.365	13.55	14.6	1.05	-5.158	2.165	13.55	14.6	1.05	0.8	0.14	30000

Caratteristiche del materiale

(Circolare 7 21-01-19 C8.5.I) Muratura in mattoni pieni e malta di calce LC2_Corti

fb_	fhk	fvk0	fhmedio	τ0	fv0	μ	ϕ	fvk,lim	E	G	FC
120000			172500	9000	20000	0.577	0.767	6500	320000000	128000000	1.2

Verifiche a pressoflessione delle travi in muratura in combinazioni non sismiche

Sezione	γM	N	M	Mu	Comb.	c.s.	Verifica
ini.	3	159	20.81	783.1	SLU 35	37.63	Si
fin.	3	159	-565.4	783.1	SLU 35	1.39	Si
ini.	3	160	17.6	783.1	SLU 36	44.49	Si
fin.	3	160	-564.46	783.1	SLU 36	1.39	Si
ini.	3	171	28.94	783.1	SLU 75	27.05	Si
fin.	3	171	-563.36	783.1	SLU 75	1.39	Si
ini.	3	166	20.35	783.1	SLU 80	38.49	Si
fin.	3	166	-581.25	783.1	SLU 80	1.35	Si
ini.	3	174	21.21	783.1	SLU 77	36.91	Si
fin.	3	174	-616.15	783.1	SLU 77	1.27	Si
ini.	3	165	23.56	783.1	SLU 79	33.24	Si
fin.	3	165	-582.19	783.1	SLU 79	1.35	Si
ini.	3	175	18	783.1	SLU 78	43.5	Si
fin.	3	175	-615.21	783.1	SLU 78	1.27	Si
ini.	3	176	42.8	783.1	SLU 83	18.3	Si
fin.	3	176	-569.55	783.1	SLU 83	1.37	Si
ini.	3	170	32.16	783.1	SLU 74	24.35	Si
fin.	3	170	-564.3	783.1	SLU 74	1.39	Si
ini.	3	178	39.59	783.1	SLU 84	19.78	Si
fin.	3	178	-568.61	783.1	SLU 84	1.38	Si

Verifiche a taglio delle travi in muratura secondo §C8.7.1.3.1 in combinazioni non sismiche

Sezione	γM	N	M	V	Vt	Vp	Vt fess. diag.	Vt,lim	Comb.	c.s.	Verifica
ini.	3	166	20.35	-611			566	173	SLU 80	0.28	No
fin.	3	166	-581.25	-905			566	173	SLU 80	0.19	No
ini.	3	165	23.56	-617			566	174	SLU 79	0.28	No
fin.	3	165	-582.19	-911			566	174	SLU 79	0.19	No
ini.	3	171	28.94	-600			566	172	SLU 75	0.29	No
fin.	3	171	-563.36	-894			566	172	SLU 75	0.19	No
ini.	3	175	18	-651			566	171	SLU 78	0.26	No
fin.	3	175	-615.21	-945			566	171	SLU 78	0.18	No
ini.	3	170	32.16	-605			566	172	SLU 74	0.28	No
fin.	3	170	-564.3	-899			566	172	SLU 74	0.19	No
ini.	3	173	50.53	-568			566	171	SLU 82	0.3	No
fin.	3	173	-516.76	-863			566	171	SLU 82	0.2	No
ini.	3	174	21.21	-656			566	171	SLU 77	0.26	No
fin.	3	174	-616.15	-950			566	171	SLU 77	0.18	No
ini.	3	176	42.8	-625			566	170	SLU 83	0.27	No
fin.	3	176	-569.55	-919			566	170	SLU 83	0.19	No
ini.	3	178	39.59	-620			566	170	SLU 84	0.27	No
fin.	3	178	-568.61	-914			566	170	SLU 84	0.19	No
ini.	3	172	53.74	-574			566	172	SLU 81	0.3	No
fin.	3	172	-517.7	-868			566	172	SLU 81	0.2	No

Verifiche a pressoflessione delle travi in muratura in combinazioni sismiche

Sezione	γM	N	M	Mu	Comb.	c.s.	Verifica
ini.	2	57	302.56	1174.65	SLV 12	3.88	Si
fin.	2	-462	-2615.59	1174.65	SLV 12	0.45	No
ini.	2	-80	276.2	1174.65	SLV 8	4.25	Si
fin.	2	-324	-2273.43	1174.65	SLV 8	0.52	No
ini.	2	293	146.9	1174.65	SLV 16	8	Si
fin.	2	-282	-1518.31	1174.65	SLV 16	0.77	No
ini.	2	57	302.56	1174.65	SLV 11	3.88	Si
fin.	2	-462	-2615.59	1174.65	SLV 11	0.45	No

Sezione	γM	N	M	Mu	Comb.	c.s.	Verifica
ini.	2	273	-230.01	1174.65	SLV 9	5.11	Si
fin.	2	517	1660.04	1174.65	SLV 9	0.71	No
ini.	2	-80	276.2	1174.65	SLV 7	4.25	Si
fin.	2	-324	-2273.43	1174.65	SLV 7	0.52	No
ini.	2	136	-256.36	1174.65	SLV 5	4.58	Si
fin.	2	655	2002.21	1174.65	SLV 5	0.59	No
ini.	2	273	-230.01	1174.65	SLV 10	5.11	Si
fin.	2	517	1660.04	1174.65	SLV 10	0.71	No
ini.	2	293	146.9	1174.65	SLV 15	8	Si
fin.	2	-282	-1518.31	1174.65	SLV 15	0.77	No
ini.	2	136	-256.36	1174.65	SLV 6	4.58	Si
fin.	2	655	2002.21	1174.65	SLV 6	0.59	No

Verifiche a taglio delle travi in muratura secondo §C8.7.1.3.1 in combinazioni sismiche

Sezione	γM	N	M	V	Vt	Vp	Vt fess. diag.	Vt,lim	Comb.	c.s.	Verifica
ini.	2	57	302.56	-3669			849	307	SLV 12	0.08	No
fin.	2	-462	-2615.59	-3786			1034	408	SLV 12	0.11	No
ini.	2	293	146.9	-1799			849	248	SLV 15	0.14	No
fin.	2	-282	-1518.31	-2195			962	376	SLV 15	0.17	No
ini.	2	293	146.9	-1799			849	248	SLV 16	0.14	No
fin.	2	-282	-1518.31	-2195			962	376	SLV 16	0.17	No
ini.	2	136	-256.36	3058			849	288	SLV 6	0.09	No
fin.	2	655	2002.21	2727			849	105	SLV 6	0.04	No
ini.	2	273	-230.01	2738			849	253	SLV 9	0.09	No
fin.	2	517	1660.04	2273			849	174	SLV 9	0.08	No
ini.	2	273	-230.01	2738			849	253	SLV 10	0.09	No
fin.	2	517	1660.04	2273			849	174	SLV 10	0.08	No
ini.	2	-80	276.2	-3350			881	337	SLV 8	0.1	No
fin.	2	-324	-2273.43	-3332			979	384	SLV 8	0.12	No
ini.	2	-80	276.2	-3350			881	337	SLV 7	0.1	No
fin.	2	-324	-2273.43	-3332			979	384	SLV 7	0.12	No
ini.	2	57	302.56	-3669			849	307	SLV 11	0.08	No
fin.	2	-462	-2615.59	-3786			1034	408	SLV 11	0.11	No
ini.	2	136	-256.36	3058			849	288	SLV 5	0.09	No
fin.	2	655	2002.21	2727			849	105	SLV 5	0.04	No

Tabella dei coefficienti di sicurezza minimi

Stato limite	Coeff.s.	Comb.	Verifica
PF_SLV	0.449	SLV 11	No
V_SLV	0.039	SLV 5	No
PF_SLU	1.271	SLU 77	Si
V_SLU	0.18	SLU 77	No

Trave di accoppiamento 166

Verifiche condotte secondo D.M. 17-01-18 (N.T.C.)

Dati geometrici

X ini.	Y ini.	Z ini.inf.	Z ini.sup.	H ini.	X fin.	Y fin.	Z fin.inf.	Z fin.sup	H fin.	Luce	Spessore	R. Trazione
-6.464	-3.248	11.45	12.35	0.9	-7.464	-3.248	11.45	12.35	0.9	1	0.28	30000

Caratteristiche del materiale

(Circolare 7 21-01-19 C8.5.I) Muratura in mattoni pieni e malta di calce LC2_Corti

fb_	fhk	fvk0	fhmedio	τ0	fv0	μ	ϕ	fvk,lim	E	G	FC
120000			172500	9000	20000	0.577	0.767	6500	320000000	128000000	1.2

Verifiche a pressoflessione delle travi in muratura in combinazioni non sismiche

Sezione	γM	N	M	Mu	Comb.	c.s.	Verifica
ini.	3	1309	-18.62	1150.68	SLU 74	61.81	Si
fin.	3	811	-129.3	1150.68	SLU 74	8.9	Si
ini.	3	1284	-15.34	1150.68	SLU 71	75.03	Si
fin.	3	833	-124.41	1150.68	SLU 71	9.25	Si
ini.	3	1259	-25.49	1150.68	SLU 81	45.14	Si
fin.	3	766	-127.09	1150.68	SLU 81	9.05	Si
ini.	3	1380	-29.3	1150.68	SLU 83	39.27	Si
fin.	3	837	-134.1	1150.68	SLU 83	8.58	Si
ini.	3	1255	-25.18	1150.68	SLU 37	45.7	Si
fin.	3	772	-126.03	1150.68	SLU 37	9.13	Si
ini.	3	1278	-9.98	1150.68	SLU 69	115.28	Si
fin.	3	830	-124.61	1150.68	SLU 69	9.23	Si
ini.	3	1435	-27.78	1150.68	SLU 79	41.42	Si
fin.	3	886	-136.1	1150.68	SLU 79	8.45	Si
ini.	3	1199	-26.7	1150.68	SLU 41	43.1	Si
fin.	3	723	-124.03	1150.68	SLU 41	9.28	Si
ini.	3	1429	-22.43	1150.68	SLU 77	51.31	Si
fin.	3	883	-136.31	1150.68	SLU 77	8.44	Si
ini.	3	1249	-19.82	1150.68	SLU 35	58.05	Si
fin.	3	769	-126.24	1150.68	SLU 35	9.12	Si

Verifiche a taglio delle travi in muratura secondo §C8.7.1.3.1 in combinazioni non sismiche

Sezione	γM	N	M	V	Vt	Vp	Vt fess. diag.	Vt,lim	Comb.	c.s.	Verifica
ini.	3	1347	-70.82	-208			873	0	SLU 57	0	No
fin.	3	761	-72.95	333			873	101	SLU 57	0.3	No
ini.	3	1353	-76.17	-167			873	0	SLU 59	0	No
fin.	3	765	-72.74	313			873	98	SLU 59	0.31	No
ini.	3	1138	-27.16	-183			873	0	SLU 60	0	No
fin.	3	674	-95.94	72			873	146	SLU 60	2.03	Si

Sezione	γM	N	M	V	Vt	Vp	Vt fess. diag.	Vt,lim	Comb.	c.s.	Verifica
ini.	3	1308	-24.1	-408			873	0	SLU 56	0	No
fin.	3	791	-105.15	254			873	80	SLU 56	0.31	No
ini.	3	1313	-29.45	-367			873	0	SLU 58	0	No
fin.	3	794	-104.95	235			873	77	SLU 58	0.33	No
ini.	3	1187	-20.29	-341			873	0	SLU 53	0	No
fin.	3	719	-98.14	183			873	125	SLU 53	0.68	No
ini.	3	1238	-73.42	50			873	0	SLU 42	0	No
fin.	3	694	-91.83	89			873	137	SLU 42	1.54	Si
ini.	3	1259	-103.5	33			873	0	SLU 55	0	No
fin.	3	674	-44.26	295			873	146	SLU 55	0.5	No
ini.	3	1227	-67	-141			873	0	SLU 54	0	No
fin.	3	690	-65.94	262			873	139	SLU 54	0.53	No
ini.	3	1177	-73.88	17			873	0	SLU 61	0	No
fin.	3	645	-63.73	150			873	159	SLU 61	1.05	Si

Verifiche a pressoflessione delle travi in muratura in combinazioni sismiche

Sezione	γM	N	M	Mu	Comb.	c.s.	Verifica
ini.	2	-450	318.28	1726.01	SLV 5	5.42	Si
fin.	2	1944	-767.42	1726.01	SLV 5	2.25	Si
ini.	2	-2180	1021.52	1726.01	SLV 1	1.69	Si
fin.	2	2772	-1340.47	1726.01	SLV 1	1.29	Si
ini.	2	3818	-1041.23	1726.01	SLV 15	1.66	Si
fin.	2	-1720	1177.66	1726.01	SLV 15	1.47	Si
ini.	2	-2180	1021.52	1726.01	SLV 2	1.69	Si
fin.	2	2772	-1340.47	1726.01	SLV 2	1.29	Si
ini.	2	3818	-1041.23	1726.01	SLV 16	1.66	Si
fin.	2	-1720	1177.66	1726.01	SLV 16	1.47	Si
ini.	2	3575	-1028.89	1726.01	SLV 14	1.68	Si
fin.	2	-1229	974.39	1726.01	SLV 14	1.77	Si
ini.	2	-1936	1009.18	1726.01	SLV 3	1.71	Si
fin.	2	2280	-1137.2	1726.01	SLV 3	1.52	Si
ini.	2	-450	318.28	1726.01	SLV 6	5.42	Si
fin.	2	1944	-767.42	1726.01	SLV 6	2.25	Si
ini.	2	-1936	1009.18	1726.01	SLV 4	1.71	Si
fin.	2	2280	-1137.2	1726.01	SLV 4	1.52	Si
ini.	2	3575	-1028.89	1726.01	SLV 13	1.68	Si
fin.	2	-1229	974.39	1726.01	SLV 13	1.77	Si

Verifiche a taglio delle travi in muratura secondo §C8.7.1.3.1 in combinazioni sismiche

Sezione	γM	N	M	V	Vt	Vp	Vt fess. diag.	Vt,lim	Comb.	c.s.	Verifica
ini.	2	-450	318.28	-1025			1472	574	SLV 5	0.56	No
fin.	2	1944	-767.42	-2315			1310	0	SLV 5	0	No
ini.	2	-450	318.28	-1025			1472	574	SLV 6	0.56	No
fin.	2	1944	-767.42	-2315			1310	0	SLV 6	0	No
ini.	2	2089	-337.98	566			1310	0	SLV 11	0	No
fin.	2	-893	604.61	2420			1632	644	SLV 11	0.27	No
ini.	2	-2180	1021.52	-3881			2095	815	SLV 1	0.21	No
fin.	2	2772	-1340.47	-4791			1310	0	SLV 1	0	No
ini.	2	-1936	1009.18	-4079			2007	785	SLV 4	0.19	No
fin.	2	2280	-1137.2	-4188			1310	0	SLV 4	0	No
ini.	2	-2180	1021.52	-3881			2095	815	SLV 2	0.21	No
fin.	2	2772	-1340.47	-4791			1310	0	SLV 2	0	No
ini.	2	2089	-337.98	566			1310	0	SLV 12	0	No
fin.	2	-893	604.61	2420			1632	644	SLV 12	0.27	No
ini.	2	1276	-296.85	1226			1310	0	SLV 9	0	No
fin.	2	744	-72.97	410			1310	315	SLV 9	0.77	No
ini.	2	1276	-296.85	1226			1310	0	SLV 10	0	No
fin.	2	744	-72.97	410			1310	315	SLV 10	0.77	No
ini.	2	-1936	1009.18	-4079			2007	785	SLV 3	0.19	No
fin.	2	2280	-1137.2	-4188			1310	0	SLV 3	0	No

Tabella dei coefficienti di sicurezza minimi

Stato limite	Coeff.s.	Comb.	Verifica
PF_SLV	1.288	SLV 1	Si
V_SLV	0	SLV 1	No
PF_SLU	8.442	SLU 77	Si
V_SLU	0	SLU 3	No

Trave di accoppiamento 167

Verifiche condotte secondo D.M. 17-01-18 (N.T.C.)

Dati geometrici

X ini.	Y ini.	Z ini.inf.	Z ini.sup.	H ini.	X fin.	Y fin.	Z fin.inf.	Z fin.sup	H fin.	Luce	Spessore	R. Trazione
-6.464	-3.248	14.25	14.6	0.35	-7.464	-3.248	14.25	14.6	0.35	1	0.28	30000

Caratteristiche del materiale

(Circolare 7 21-01-19 C8.5.I) Muratura in mattoni pieni e malta di calce LC2_Corti

fb_	fhk	fvk0	fhmedio	τ0	fv0	μ	ϕ	fvk,lim	E	G	FC
120000			172500	9000	20000	0.577	0.767	6500	320000000	128000000	1.2

Verifiche a pressoflessione delle travi in muratura in combinazioni non sismiche

Sezione	γM	N	M	Mu	Comb.	c.s.	Verifica
ini.	3	1308	-79.2	174.02	SLU 80	2.2	Si
fin.	3	997	91.76	174.02	SLU 80	1.9	Si
ini.	3	1309	-87.57	174.02	SLU 78	1.99	Si
fin.	3	985	85.56	174.02	SLU 78	2.03	Si

Sezione	γM	N	M	Mu	Comb.	c.s.	Verifica
ini.	3	1286	-69.72	174.02	SLU 84	2.5	Si
fin.	3	1004	86.61	174.02	SLU 84	2.01	Si
ini.	3	900	-79.01	174.02	SLU 79	2.2	Si
fin.	3	487	85.15	174.02	SLU 79	2.04	Si
ini.	3	1249	-84.17	174.02	SLU 70	2.07	Si
fin.	3	935	77.4	174.02	SLU 70	2.25	Si
ini.	3	1209	-75.5	174.02	SLU 59	2.3	Si
fin.	3	940	87.13	174.02	SLU 59	2	Si
ini.	3	902	-87.38	174.02	SLU 77	1.99	Si
fin.	3	476	78.94	174.02	SLU 77	2.2	Si
ini.	3	1211	-83.88	174.02	SLU 57	2.07	Si
fin.	3	928	80.92	174.02	SLU 57	2.15	Si
ini.	3	1532	-68.39	174.02	SLU 76	2.54	Si
fin.	3	1322	87.52	174.02	SLU 76	1.99	Si
ini.	3	841	-83.98	174.02	SLU 69	2.07	Si
fin.	3	426	70.78	174.02	SLU 69	2.46	Si

Verifiche a taglio delle travi in muratura secondo §C8.7.1.3.1 in combinazioni non sismiche

Sezione	γM	N	M	V	Vt	Vp	Vt fess. diag.	Vt,lim	Comb.	c.s.	Verifica
ini.	3	802	-75.31	543			252	0	SLU 58	0	No
fin.	3	430	80.51	139			252	0	SLU 58	0	No
ini.	3	1211	-83.88	554			252	0	SLU 57	0	No
fin.	3	928	80.92	20			252	0	SLU 57	0	No
ini.	3	756	-72.75	532			252	0	SLU 53	0	No
fin.	3	403	65.65	0			252	0	SLU 53	0	No
ini.	3	1164	-72.94	486			252	0	SLU 54	0	No
fin.	3	913	72.27	-53			252	0	SLU 54	0	No
ini.	3	1141	-55.09	367			252	0	SLU 61	0	No
fin.	3	931	73.32	-50			252	0	SLU 61	0	No
ini.	3	733	-54.9	414			252	0	SLU 60	0	No
fin.	3	421	66.7	3			252	0	SLU 60	0	No
ini.	3	803	-83.68	601			252	0	SLU 56	0	No
fin.	3	418	74.31	73			252	0	SLU 56	0	No
ini.	3	1209	-75.5	496			252	0	SLU 59	0	No
fin.	3	940	87.13	86			252	0	SLU 59	0	No
ini.	3	1434	-64.7	396			252	0	SLU 55	0	No
fin.	3	1265	82.89	-22			252	0	SLU 55	0	No
ini.	3	523	-39.46	306			252	0	SLU 1	0	No
fin.	3	284	43.56	-16			252	34	SLU 1	2.15	Si

Verifiche a pressoflessione delle travi in muratura in combinazioni sismiche

Sezione	γM	N	M	Mu	Comb.	c.s.	Verifica
ini.	2	-903	-339.34	261.03	SLV 16	0.77	No
fin.	2	-613	225.59	261.03	SLV 16	1.16	Si
ini.	2	4800	285.46	261.03	SLV 6	0.91	No
fin.	2	3861	24.41	261.03	SLV 6	10.69	Si
ini.	2	2040	256.36	261.03	SLV 2	1.02	Si
fin.	2	1243	-131.15	261.03	SLV 2	1.99	Si
ini.	2	-3663	-368.44	261.03	SLV 12	0.71	No
fin.	2	-3231	70.03	261.03	SLV 12	3.73	Si
ini.	2	1596	-182.69	261.03	SLV 13	1.43	Si
fin.	2	1542	245.84	261.03	SLV 13	1.06	Si
ini.	2	4800	285.46	261.03	SLV 5	0.91	No
fin.	2	3861	24.41	261.03	SLV 5	10.69	Si
ini.	2	-903	-339.34	261.03	SLV 15	0.77	No
fin.	2	-613	225.59	261.03	SLV 15	1.16	Si
ini.	2	1596	-182.69	261.03	SLV 14	1.43	Si
fin.	2	1542	245.84	261.03	SLV 14	1.06	Si
ini.	2	2040	256.36	261.03	SLV 1	1.02	Si
fin.	2	1243	-131.15	261.03	SLV 1	1.99	Si
ini.	2	-3663	-368.44	261.03	SLV 11	0.71	No
fin.	2	-3231	70.03	261.03	SLV 11	3.73	Si

Verifiche a taglio delle travi in muratura secondo §C8.7.1.3.1 in combinazioni sismiche

Sezione	γM	N	M	V	Vt	Vp	Vt fess. diag.	Vt,lim	Comb.	c.s.	Verifica
ini.	2	4667	153.74	-881			377	0	SLV 9	0	No
fin.	2	3951	137.51	-1416			377	0	SLV 9	0	No
ini.	2	2040	256.36	-815			377	0	SLV 1	0	No
fin.	2	1243	-131.15	-2186			377	0	SLV 1	0	No
ini.	2	-903	-339.34	1459			618	239	SLV 15	0.16	No
fin.	2	-613	225.59	2176			541	213	SLV 15	0.1	No
ini.	2	4667	153.74	-881			377	0	SLV 10	0	No
fin.	2	3951	137.51	-1416			377	0	SLV 10	0	No
ini.	2	1596	-182.69	609			377	0	SLV 14	0	No
fin.	2	1542	245.84	1039			377	0	SLV 14	0	No
ini.	2	4800	285.46	-1308			377	0	SLV 6	0	No
fin.	2	3861	24.41	-2383			377	0	SLV 6	0	No
ini.	2	4800	285.46	-1308			377	0	SLV 5	0	No
fin.	2	3861	24.41	-2383			377	0	SLV 5	0	No
ini.	2	1596	-182.69	609			377	0	SLV 13	0	No
fin.	2	1542	245.84	1039			377	0	SLV 13	0	No
ini.	2	2040	256.36	-815			377	0	SLV 2	0	No
fin.	2	1243	-131.15	-2186			377	0	SLV 2	0	No
ini.	2	-903	-339.34	1459			618	239	SLV 16	0.16	No
fin.	2	-613	225.59	2176			541	213	SLV 16	0.1	No

Tabella dei coefficienti di sicurezza minimi

Stato limite	Coeff.s.	Comb.	Verifica
PF_SLV	0.708	SLV 11	No
V_SLV	0	SLV 1	No

Stato limite	Coeff.s.	Comb.	Verifica
PF_SLU	1.896	SLU 80	Si
V_SLU	0	SLU 1	No

Trave di accoppiamento 168

Verifiche condotte secondo D.M. 17-01-18 (N.T.C.)

Dati geometrici

X ini.	Y ini.	Z ini.inf.	Z ini.sup.	H ini.	X fin.	Y fin.	Z fin.inf.	Z fin.sup	H fin.	Luce	Spessore	R. Trazione
-5.454	-3.248	11.45	13.45	2	-5.954	-3.248	11.45	13.45	2	0.5	0.28	30000

Caratteristiche del materiale

(Circolare 7 21-01-19 C8.5.I) Muratura in mattoni pieni e malta di calce LC2_Corti

fb_	fhk	fvk0	fhmedio	τ0	fv0	μ	ϕ	fvk,lim	E	G	FC
120000			172500	9000	20000	0.577	0.767	6500	320000000	128000000	1.2

Verifiche a pressoflessione delle travi in muratura in combinazioni non sismiche

Sezione	γM	N	M	Mu	Comb.	c.s.	Verifica
ini.	3	1004	370.81	5682.35	SLU 83	15.32	Si
fin.	3	1288	781.65	5682.35	SLU 83	7.27	Si
ini.	3	981	368.66	5682.35	SLU 79	15.41	Si
fin.	3	1278	849.01	5682.35	SLU 79	6.69	Si
ini.	3	814	362.93	5682.35	SLU 69	15.66	Si
fin.	3	1086	812.95	5682.35	SLU 69	6.99	Si
ini.	3	891	334.05	5682.35	SLU 58	17.01	Si
fin.	3	1157	783.01	5682.35	SLU 58	7.26	Si
ini.	3	843	336.35	5682.35	SLU 71	16.89	Si
fin.	3	1105	793.32	5682.35	SLU 71	7.16	Si
ini.	3	1093	341.88	5682.35	SLU 80	16.62	Si
fin.	3	1344	808.28	5682.35	SLU 80	7.03	Si
ini.	3	862	360.63	5682.35	SLU 56	15.76	Si
fin.	3	1138	802.65	5682.35	SLU 56	7.08	Si
ini.	3	916	383.54	5682.35	SLU 74	14.82	Si
fin.	3	1195	777.42	5682.35	SLU 74	7.31	Si
ini.	3	1064	368.46	5682.35	SLU 78	15.42	Si
fin.	3	1326	827.91	5682.35	SLU 78	6.86	Si
ini.	3	952	395.23	5682.35	SLU 77	14.38	Si
fin.	3	1259	868.65	5682.35	SLU 77	6.54	Si

Verifiche a taglio delle travi in muratura secondo §C8.7.1.3.1 in combinazioni non sismiche

Sezione	γM	N	M	V	Vt	Vp	Vt fess. diag.	Vt,lim	Comb.	c.s.	Verifica
ini.	3	891	334.05	392			2157	587	SLU 58	1.5	Si
fin.	3	1157	783.01	1338			2157	500	SLU 58	0.37	No
ini.	3	1093	341.88	467			2157	523	SLU 80	1.12	Si
fin.	3	1344	808.28	1349			2157	429	SLU 80	0.32	No
ini.	3	925	336.15	448			2157	576	SLU 70	1.29	Si
fin.	3	1153	772.21	1367			2157	502	SLU 70	0.37	No
ini.	3	954	309.58	491			2157	567	SLU 72	1.16	Si
fin.	3	1172	752.58	1361			2157	495	SLU 72	0.36	No
ini.	3	1064	368.46	424			2157	532	SLU 78	1.26	Si
fin.	3	1326	827.91	1355			2157	437	SLU 78	0.32	No
ini.	3	952	395.23	339			2157	568	SLU 77	1.68	Si
fin.	3	1259	868.65	1390			2157	463	SLU 77	0.33	No
ini.	3	843	336.35	406			2157	601	SLU 71	1.48	Si
fin.	3	1105	793.32	1397			2157	518	SLU 71	0.37	No
ini.	3	974	333.85	434			2157	561	SLU 57	1.29	Si
fin.	3	1205	761.91	1309			2157	483	SLU 57	0.37	No
ini.	3	1003	307.28	477			2157	552	SLU 59	1.16	Si
fin.	3	1224	742.27	1303			2157	476	SLU 59	0.37	No
ini.	3	981	368.66	382			2157	559	SLU 79	1.46	Si
fin.	3	1278	849.01	1384			2157	456	SLU 79	0.33	No

Verifiche a pressoflessione delle travi in muratura in combinazioni sismiche

Sezione	γM	N	M	Mu	Comb.	c.s.	Verifica
ini.	2	3425	-1030.07	8523.53	SLV 14	8.27	Si
fin.	2	3275	679.71	8523.53	SLV 14	12.54	Si
ini.	2	497	853.17	8523.53	SLV 11	9.99	Si
fin.	2	1397	1479.52	8523.53	SLV 11	5.76	Si
ini.	2	497	853.17	8523.53	SLV 12	9.99	Si
fin.	2	1397	1479.52	8523.53	SLV 12	5.76	Si
ini.	2	-1032	1452.73	8523.53	SLV 7	5.87	Si
fin.	2	-82	1198.3	8523.53	SLV 7	7.11	Si
ini.	2	-1032	1452.73	8523.53	SLV 8	5.87	Si
fin.	2	-82	1198.3	8523.53	SLV 8	7.11	Si
ini.	2	-2202	1514.81	8523.53	SLV 4	5.63	Si
fin.	2	-1724	262.89	8523.53	SLV 4	32.42	Si
ini.	2	2898	-483.72	8523.53	SLV 16	17.62	Si
fin.	2	3205	1200.28	8523.53	SLV 16	7.1	Si
ini.	2	-2202	1514.81	8523.53	SLV 3	5.63	Si
fin.	2	-1724	262.89	8523.53	SLV 3	32.42	Si
ini.	2	3425	-1030.07	8523.53	SLV 13	8.27	Si
fin.	2	3275	679.71	8523.53	SLV 13	12.54	Si
ini.	2	2898	-483.72	8523.53	SLV 15	17.62	Si
fin.	2	3205	1200.28	8523.53	SLV 15	7.1	Si

Verifiche a taglio delle travi in muratura secondo §C8.7.1.3.1 in combinazioni sismiche

Sezione	γM	N	M	V	Vt	Vp	Vt fess. diag.	Vt,lim	Comb.	c.s.	Verifica
ini.	2	2256	-968	2181			3235	537	SLV 9	0.25	No
fin.	2	1633	-255.71	2229			3235	786	SLV 9	0.35	No
ini.	2	2256	-968	2181			3235	537	SLV 10	0.25	No
fin.	2	1633	-255.71	2229			3235	786	SLV 10	0.35	No
ini.	2	-1674	968.46	-2248			3905	1539	SLV 2	0.68	No
fin.	2	-1654	-257.68	-2415			3896	1535	SLV 2	0.64	No
ini.	2	-2202	1514.81	-2945			4116	1627	SLV 4	0.55	No
fin.	2	-1724	262.89	-2717			3925	1548	SLV 4	0.57	No
ini.	2	-1674	968.46	-2248			3905	1539	SLV 1	0.68	No
fin.	2	-1654	-257.68	-2415			3896	1535	SLV 1	0.64	No
ini.	2	2898	-483.72	2616			3235	0	SLV 15	0	No
fin.	2	3205	1200.28	3884			3235	0	SLV 15	0	No
ini.	2	-2202	1514.81	-2945			4116	1627	SLV 3	0.55	No
fin.	2	-1724	262.89	-2717			3925	1548	SLV 3	0.57	No
ini.	2	2898	-483.72	2616			3235	0	SLV 16	0	No
fin.	2	3205	1200.28	3884			3235	0	SLV 16	0	No
ini.	2	3425	-1030.07	3314			3235	0	SLV 14	0	No
fin.	2	3275	679.71	4186			3235	0	SLV 14	0	No
ini.	2	3425	-1030.07	3314			3235	0	SLV 13	0	No
fin.	2	3275	679.71	4186			3235	0	SLV 13	0	No

Tabella dei coefficienti di sicurezza minimi

Stato limite	Coeff.s.	Comb.	Verifica
PF_SLV	5.627	SLV 3	Si
V_SLV	0	SLV 13	No
PF_SLU	6.542	SLU 77	Si
V_SLU	0.318	SLU 80	No

Trave di accoppiamento 169

Verifiche condotte secondo D.M. 17-01-18 (N.T.C.)

Dati geometrici

X ini.	Y ini.	Z ini.inf.	Z ini.sup.	H ini.	X fin.	Y fin.	Z fin.inf.	Z fin.sup	H fin.	Luce	Spessore	R. Trazione
-5.454	-3.248	14.25	14.6	0.35	-5.954	-3.248	14.25	14.6	0.35	0.5	0.28	30000

Caratteristiche del materiale

(Circolare 7 21-01-19 C8.5.I) Muratura in mattoni pieni e malta di calce LC2_Corti

fb_	fhk	fvk0	fhmedio	τ0	fv0	μ	ϕ	fvk,lim	E	G	FC
120000			172500	9000	20000	0.577	0.767	6500	320000000	128000000	1.2

Verifiche a pressoflessione delle travi in muratura in combinazioni non sismiche

Sezione	γM	N	M	Mu	Comb.	c.s.	Verifica
ini.	3	967	-279.81	174.02	SLU 71	0.62	No
fin.	3	967	266.79	174.02	SLU 71	0.65	No
ini.	3	961	-266.46	174.02	SLU 69	0.65	No
fin.	3	961	253.98	174.02	SLU 69	0.69	No
ini.	3	887	-259.25	174.02	SLU 50	0.67	No
fin.	3	887	245.96	174.02	SLU 50	0.71	No
ini.	3	1008	-265.03	174.02	SLU 77	0.66	No
fin.	3	1008	253.05	174.02	SLU 77	0.69	No
ini.	3	881	-245.91	174.02	SLU 48	0.71	No
fin.	3	881	233.15	174.02	SLU 48	0.75	No
ini.	3	812	-245.19	174.02	SLU 27	0.71	No
fin.	3	812	233.98	174.02	SLU 27	0.74	No
ini.	3	817	-258.53	174.02	SLU 29	0.67	No
fin.	3	817	246.78	174.02	SLU 29	0.71	No
ini.	3	864	-257.1	174.02	SLU 37	0.68	No
fin.	3	864	245.85	174.02	SLU 37	0.71	No
ini.	3	934	-257.82	174.02	SLU 58	0.67	No
fin.	3	934	245.02	174.02	SLU 58	0.71	No
ini.	3	1013	-278.37	174.02	SLU 79	0.63	No
fin.	3	1013	265.85	174.02	SLU 79	0.65	No

Verifiche a taglio delle travi in muratura secondo §C8.7.1.3.1 in combinazioni non sismiche

Sezione	γM	N	M	V	Vt	Vp	Vt fess. diag.	Vt,lim	Comb.	c.s.	Verifica
ini.	3	870	19.13	-18			264	0	SLU 61	0	No
fin.	3	870	-18.36	-132			264	0	SLU 61	0	No
ini.	3	993	-111.7	490			264	0	SLU 57	0	No
fin.	3	993	104.72	376			264	0	SLU 57	0	No
ini.	3	589	-94.42	414			264	0	SLU 1	0	No
fin.	3	589	90.48	326			264	0	SLU 1	0	No
ini.	3	853	-172.69	732			264	0	SLU 53	0	No
fin.	3	853	164.48	617			264	0	SLU 53	0	No
ini.	3	999	-125.05	542			264	0	SLU 59	0	No
fin.	3	999	117.52	428			264	0	SLU 59	0	No
ini.	3	928	-244.47	1011			264	0	SLU 56	0	No
fin.	3	928	232.22	896			264	0	SLU 56	0	No
ini.	3	934	-257.82	1063			264	0	SLU 58	0	No
fin.	3	934	245.02	948			264	0	SLU 58	0	No
ini.	3	967	35.24	-84			264	0	SLU 55	0	No
fin.	3	967	-35.22	-198			264	0	SLU 55	0	No
ini.	3	805	-113.64	503			264	0	SLU 60	0	No
fin.	3	805	109.14	388			264	0	SLU 60	0	No
ini.	3	918	-39.92	211			264	0	SLU 54	0	No

Sezione	γM	N	M	V	Vt	Vp	Vt fess. diag.	Vt,lim	Comb.	c.s.	Verifica
fin.	3	918	36.98	96			264	0	SLU 54	0	No

Verifiche a pressoflessione delle travi in muratura in combinazioni sismiche

Sezione	γM	N	M	Mu	Comb.	c.s.	Verifica
ini.	2	-3424	-353.24	261.03	SLV 12	0.74	No
fin.	2	-3428	341.3	261.03	SLV 12	0.76	No
ini.	2	-3424	-353.24	261.03	SLV 11	0.74	No
fin.	2	-3428	341.3	261.03	SLV 11	0.76	No
ini.	2	-45	-262.6	261.03	SLV 16	0.99	No
fin.	2	-95	244.23	261.03	SLV 16	1.07	Si
ini.	2	4674	153.49	261.03	SLV 6	1.7	Si
fin.	2	4678	-148.98	261.03	SLV 6	1.75	Si
ini.	2	4674	153.49	261.03	SLV 5	1.7	Si
fin.	2	4678	-148.98	261.03	SLV 5	1.75	Si
ini.	2	2492	-127.73	261.03	SLV 13	2.04	Si
fin.	2	2434	111.89	261.03	SLV 13	2.33	Si
ini.	2	2492	-127.73	261.03	SLV 14	2.04	Si
fin.	2	2434	111.89	261.03	SLV 14	2.33	Si
ini.	2	-3783	-296.07	261.03	SLV 8	0.88	No
fin.	2	-3754	292.16	261.03	SLV 8	0.89	No
ini.	2	-45	-262.6	261.03	SLV 15	0.99	No
fin.	2	-95	244.23	261.03	SLV 15	1.07	Si
ini.	2	-3783	-296.07	261.03	SLV 7	0.88	No
fin.	2	-3754	292.16	261.03	SLV 7	0.89	No

Verifiche a taglio delle travi in muratura secondo §C8.7.1.3.1 in combinazioni sismiche

Sezione	γM	N	M	V	Vt	Vp	Vt fess. diag.	Vt,lim	Comb.	c.s.	Verifica
ini.	2	4674	153.49	-1381			396	0	SLV 5	0	No
fin.	2	4678	-148.98	-1293			396	0	SLV 5	0	No
ini.	2	-45	-262.6	1338			409	156	SLV 15	0.12	No
fin.	2	-95	244.23	795			423	163	SLV 15	0.2	No
ini.	2	-45	-262.6	1338			409	156	SLV 16	0.12	No
fin.	2	-95	244.23	795			423	163	SLV 16	0.2	No
ini.	2	2492	-127.73	318			396	0	SLV 13	0	No
fin.	2	2434	111.89	-198			396	0	SLV 13	0	No
ini.	2	5033	96.31	-1146			396	0	SLV 10	0	No
fin.	2	5004	-99.84	-1322			396	0	SLV 10	0	No
ini.	2	1295	62.85	-466			396	0	SLV 1	0	No
fin.	2	1345	-51.91	-99			396	0	SLV 1	0	No
ini.	2	1295	62.85	-466			396	0	SLV 2	0	No
fin.	2	1345	-51.91	-99			396	0	SLV 2	0	No
ini.	2	5033	96.31	-1146			396	0	SLV 9	0	No
fin.	2	5004	-99.84	-1322			396	0	SLV 9	0	No
ini.	2	4674	153.49	-1381			396	0	SLV 6	0	No
fin.	2	4678	-148.98	-1293			396	0	SLV 6	0	No
ini.	2	2492	-127.73	318			396	0	SLV 14	0	No
fin.	2	2434	111.89	-198			396	0	SLV 14	0	No

Tabella dei coefficienti di sicurezza minimi

Stato limite	Coeff.s.	Comb.	Verifica
PF_SLV	0.739	SLV 11	No
V_SLV	0	SLV 1	No
PF_SLU	0.622	SLU 71	No
V_SLU	0	SLU 1	No

Trave di accoppiamento 170

Verifiche condotte secondo D.M. 17-01-18 (N.T.C.)

Dati geometrici

X ini.	Y ini.	Z ini.inf.	Z ini.sup.	H ini.	X fin.	Y fin.	Z fin.inf.	Z fin.sup	H fin.	Luce	Spessore	R. Trazione
-2.223	-3.248	11.45	12.35	0.9	-3.223	-3.248	11.45	12.35	0.9	1	0.28	30000

Caratteristiche del materiale

(Circolare 7 21-01-19 C8.5.I) Muratura in mattoni pieni e malta di calce LC2_Corti

fb_	fhk	fvk0	fhmedio	τ0	fv0	μ	ϕ	fvk,lim	E	G	FC
120000			172500	9000	20000	0.577	0.767	6500	320000000	128000000	1.2

Verifiche a pressoflessione delle travi in muratura in combinazioni non sismiche

Sezione	γM	N	M	Mu	Comb.	c.s.	Verifica
ini.	3	-164	48.14	1150.68	SLU 26	23.9	Si
fin.	3	137	92.75	1150.68	SLU 26	12.41	Si
ini.	3	-163	44.9	1150.68	SLU 76	25.63	Si
fin.	3	225	99.54	1150.68	SLU 76	11.56	Si
ini.	3	13	-11.01	1150.68	SLU 36	104.49	Si
fin.	3	254	88.16	1150.68	SLU 36	13.05	Si
ini.	3	-225	43.19	1150.68	SLU 31	26.64	Si
fin.	3	68	104.16	1150.68	SLU 31	11.05	Si
ini.	3	-184	48.44	1150.68	SLU 13	23.76	Si
fin.	3	115	93.36	1150.68	SLU 13	12.32	Si
ini.	3	-241	108.2	1150.68	SLU 44	10.63	Si
fin.	3	242	57.1	1150.68	SLU 44	20.15	Si
ini.	3	-244	88.79	1150.68	SLU 2	12.96	Si
fin.	3	118	68.46	1150.68	SLU 2	16.81	Si
ini.	3	-181	90.5	1150.68	SLU 47	12.71	Si
fin.	3	275	63.84	1150.68	SLU 47	18.02	Si
ini.	3	-223	62.6	1150.68	SLU 73	18.38	Si

Sezione	γM	N	M	Mu	Comb.	c.s.	Verifica
fin.	3	192	92.8	1150.68	SLU 73	12.4	Si
ini.	3	-165	25.49	1150.68	SLU 34	45.15	Si
fin.	3	101	110.9	1150.68	SLU 34	10.38	Si

Verifiche a taglio delle travi in muratura secondo §C8.7.1.3.1 in combinazioni non sismiche

Sezione	γM	N	M	V	Vt	Vp	Vt fess. diag.	Vt,lim	Comb.	c.s.	Verifica
ini.	3	15	8.4	-121			873	326	SLU 78	2.7	Si
fin.	3	378	76.8	237			873	244	SLU 78	1.03	Si
ini.	3	16	31.05	-239			873	325	SLU 70	1.36	Si
fin.	3	414	58.64	251			873	234	SLU 70	0.93	No
ini.	3	161	23.82	-305			873	296	SLU 48	0.97	No
fin.	3	596	-10.67	136			873	177	SLU 48	1.31	Si
ini.	3	14	11.64	-142			873	326	SLU 28	2.29	Si
fin.	3	290	70	266			873	266	SLU 28	1	No
ini.	3	152	22.49	-288			873	297	SLU 50	1.03	Si
fin.	3	588	-15.7	102			873	180	SLU 50	1.76	Si
ini.	3	-63	71.7	-342			896	341	SLU 46	1	No
fin.	3	395	34.36	159			873	239	SLU 46	1.51	Si
ini.	3	-241	108.2	-354			960	373	SLU 44	1.05	Si
fin.	3	242	57.1	116			873	277	SLU 44	2.39	Si
ini.	3	101	41.52	-317			873	308	SLU 45	0.97	No
fin.	3	563	-17.42	63			873	189	SLU 45	3.01	Si
ini.	3	-3	54	-329			874	329	SLU 49	1	No
fin.	3	428	41.1	232			873	230	SLU 49	0.99	No
ini.	3	32	57.9	-313			873	322	SLU 43	1.03	Si
fin.	3	522	-29.19	-44			873	202	SLU 43	4.59	Si

Verifiche a pressoflessione delle travi in muratura in combinazioni sismiche

Sezione	γM	N	M	Mu	Comb.	c.s.	Verifica
ini.	2	-1929	840.23	1726.01	SLV 1	2.05	Si
fin.	2	790	-165.7	1726.01	SLV 1	10.42	Si
ini.	2	1998	-789.32	1726.01	SLV 16	2.19	Si
fin.	2	-23	150.44	1726.01	SLV 16	11.47	Si
ini.	2	198	117.72	1726.01	SLV 9	14.66	Si
fin.	2	101	630.6	1726.01	SLV 9	2.74	Si
ini.	2	-129	-66.82	1726.01	SLV 7	25.83	Si
fin.	2	667	-645.85	1726.01	SLV 7	2.67	Si
ini.	2	-1695	654.89	1726.01	SLV 4	2.64	Si
fin.	2	879	-490.91	1726.01	SLV 4	3.52	Si
ini.	2	1998	-789.32	1726.01	SLV 15	2.19	Si
fin.	2	-23	150.44	1726.01	SLV 15	11.47	Si
ini.	2	-129	-66.82	1726.01	SLV 8	25.83	Si
fin.	2	667	-645.85	1726.01	SLV 8	2.67	Si
ini.	2	198	117.72	1726.01	SLV 10	14.66	Si
fin.	2	101	630.6	1726.01	SLV 10	2.74	Si
ini.	2	-1695	654.89	1726.01	SLV 3	2.64	Si
fin.	2	879	-490.91	1726.01	SLV 3	3.52	Si
ini.	2	-1929	840.23	1726.01	SLV 2	2.05	Si
fin.	2	790	-165.7	1726.01	SLV 2	10.42	Si

Verifiche a taglio delle travi in muratura secondo §C8.7.1.3.1 in combinazioni sismiche

Sezione	γM	N	M	V	Vt	Vp	Vt fess. diag.	Vt,lim	Comb.	c.s.	Verifica
ini.	2	1998	-789.32	2098			1310	0	SLV 16	0	No
fin.	2	-23	150.44	1451			1318	497	SLV 16	0.34	No
ini.	2	-129	-66.82	-552			1357	518	SLV 7	0.94	No
fin.	2	667	-645.85	-1523			1310	338	SLV 7	0.22	No
ini.	2	1998	-789.32	2098			1310	0	SLV 15	0	No
fin.	2	-23	150.44	1451			1318	497	SLV 15	0.34	No
ini.	2	-129	-66.82	-552			1357	518	SLV 8	0.94	No
fin.	2	667	-645.85	-1523			1310	338	SLV 8	0.22	No
ini.	2	-1695	654.89	-2258			1920	755	SLV 3	0.33	No
fin.	2	879	-490.91	-2085			1310	271	SLV 3	0.13	No
ini.	2	1764	-603.98	1943			1310	0	SLV 13	0	No
fin.	2	-111	475.65	2030			1350	514	SLV 13	0.25	No
ini.	2	-1929	840.23	-2413			2005	784	SLV 2	0.33	No
fin.	2	790	-165.7	-1506			1310	301	SLV 2	0.2	No
ini.	2	-1695	654.89	-2258			1920	755	SLV 4	0.33	No
fin.	2	879	-490.91	-2085			1310	271	SLV 4	0.13	No
ini.	2	-1929	840.23	-2413			2005	784	SLV 1	0.33	No
fin.	2	790	-165.7	-1506			1310	301	SLV 1	0.2	No
ini.	2	1764	-603.98	1943			1310	0	SLV 14	0	No
fin.	2	-111	475.65	2030			1350	514	SLV 14	0.25	No

Tabella dei coefficienti di sicurezza minimi

Stato limite	Coeff.s.	Comb.	Verifica
PF_SLV	2.054	SLV 1	Si
V_SLV	0	SLV 13	No
PF_SLU	10.375	SLU 34	Si
V_SLU	0.933	SLU 70	No

Trave di accoppiamento 171

Verifiche condotte secondo D.M. 17-01-18 (N.T.C.)

Dati geometrici

X ini.	Y ini.	Z ini.inf.	Z ini.sup.	H ini.	X fin.	Y fin.	Z fin.inf.	Z fin.sup	H fin.	Luce	Spessore	R. Trazione
-2.223	-3.248	14.25	14.6	0.35	-3.223	-3.248	14.25	14.6	0.35	1	0.28	30000

Caratteristiche del materiale

(Circolare 7 21-01-19 C8.5.I) Muratura in mattoni pieni e malta di calce LC2_Corti

fb_	fhk	fvk0	fhmedio	τ0	fv0	μ	ϕ	fvk,lim	E	G	FC
120000			172500	9000	20000	0.577	0.767	6500	320000000	128000000	1.2

Verifiche a pressoflessione delle travi in muratura in combinazioni non sismiche

Sezione	γM	N	M	Mu	Comb.	c.s.	Verifica
ini.	3	-841	-90.27	174.02	SLU 2	1.93	Si
fin.	3	-935	-19.75	174.02	SLU 2	8.81	Si
ini.	3	-912	-103.57	174.02	SLU 10	1.68	Si
fin.	3	-943	-7.65	174.02	SLU 10	22.75	Si
ini.	3	-825	-85.86	174.02	SLU 13	2.03	Si
fin.	3	-851	-21.32	174.02	SLU 13	8.16	Si
ini.	3	-943	-110.24	174.02	SLU 31	1.58	Si
fin.	3	-922	-3.78	174.02	SLU 31	46.04	Si
ini.	3	-801	-90.56	174.02	SLU 65	1.92	Si
fin.	3	-855	-28.93	174.02	SLU 65	6.02	Si
ini.	3	-872	-96.95	174.02	SLU 23	1.8	Si
fin.	3	-914	-15.88	174.02	SLU 23	10.96	Si
ini.	3	-841	-97.19	174.02	SLU 52	1.79	Si
fin.	3	-884	-20.7	174.02	SLU 52	8.41	Si
ini.	3	-872	-103.86	174.02	SLU 73	1.68	Si
fin.	3	-863	-16.83	174.02	SLU 73	10.34	Si
ini.	3	-785	-86.15	174.02	SLU 76	2.02	Si
fin.	3	-771	-30.5	174.02	SLU 76	5.71	Si
ini.	3	-856	-92.53	174.02	SLU 34	1.88	Si
fin.	3	-830	-17.45	174.02	SLU 34	9.97	Si

Verifiche a taglio delle travi in muratura secondo §C8.7.1.3.1 in combinazioni non sismiche

Sezione	γM	N	M	V	Vt	Vp	Vt fess. diag.	Vt,lim	Comb.	c.s.	Verifica
ini.	3	300	30.74	20			252	27	SLU 27	1.37	Si
fin.	3	384	-68.7	-426			252	0	SLU 27	0	No
ini.	3	273	29.1	5			252	38	SLU 37	7.05	Si
fin.	3	418	-50.44	-359			252	0	SLU 37	0	No
ini.	3	300	23.82	66			252	27	SLU 77	0.41	No
fin.	3	435	-69.65	-464			252	0	SLU 77	0	No
ini.	3	229	17.44	57			252	52	SLU 35	0.91	No
fin.	3	376	-56.6	-389			252	0	SLU 35	0	No
ini.	3	371	37.12	29			252	0	SLU 69	0	No
fin.	3	444	-81.75	-501			252	0	SLU 69	0	No
ini.	3	344	35.48	14			252	0	SLU 79	0	No
fin.	3	477	-63.49	-434			252	0	SLU 79	0	No
ini.	3	315	26.08	61			252	18	SLU 45	0.3	No
fin.	3	331	-71.95	-428			252	0	SLU 45	0	No
ini.	3	213	6.11	119			252	56	SLU 74	0.47	No
fin.	3	344	-55.98	-391			252	0	SLU 74	0	No
ini.	3	344	42.4	-32			252	0	SLU 29	0	No
fin.	3	426	-62.54	-396			252	0	SLU 29	0	No
ini.	3	226	12.07	84			252	52	SLU 83	0.63	No
fin.	3	382	-44.64	-346			252	0	SLU 83	0	No

Verifiche a pressoflessione delle travi in muratura in combinazioni sismiche

Sezione	γM	N	M	Mu	Comb.	c.s.	Verifica
ini.	2	-1667	121.08	261.03	SLV 1	2.16	Si
fin.	2	-2259	-264.47	261.03	SLV 1	0.99	No
ini.	2	2408	253.49	261.03	SLV 7	1.03	Si
fin.	2	2357	-197.32	261.03	SLV 7	1.32	Si
ini.	2	-132	237.56	261.03	SLV 3	1.1	Si
fin.	2	-676	-316.11	261.03	SLV 3	0.83	No
ini.	2	-132	237.56	261.03	SLV 4	1.1	Si
fin.	2	-676	-316.11	261.03	SLV 4	0.83	No
ini.	2	475	-221.68	261.03	SLV 13	1.18	Si
fin.	2	1125	247.09	261.03	SLV 13	1.06	Si
ini.	2	-2065	-237.61	261.03	SLV 10	1.1	Si
fin.	2	-1907	128.3	261.03	SLV 10	2.03	Si
ini.	2	-1667	121.08	261.03	SLV 2	2.16	Si
fin.	2	-2259	-264.47	261.03	SLV 2	0.99	No
ini.	2	-2065	-237.61	261.03	SLV 9	1.1	Si
fin.	2	-1907	128.3	261.03	SLV 9	2.03	Si
ini.	2	2408	253.49	261.03	SLV 8	1.03	Si
fin.	2	2357	-197.32	261.03	SLV 8	1.32	Si
ini.	2	475	-221.68	261.03	SLV 14	1.18	Si
fin.	2	1125	247.09	261.03	SLV 14	1.06	Si

Verifiche a taglio delle travi in muratura secondo §C8.7.1.3.1 in combinazioni sismiche

Sezione	γM	N	M	V	Vt	Vp	Vt fess. diag.	Vt,lim	Comb.	c.s.	Verifica
ini.	2	2408	253.49	-879			377	0	SLV 7	0	No
fin.	2	2357	-197.32	-619			377	0	SLV 7	0	No
ini.	2	3051	150.66	-464			377	0	SLV 11	0	No
fin.	2	3372	-43.85	-185			377	0	SLV 11	0	No
ini.	2	3051	150.66	-464			377	0	SLV 12	0	No
fin.	2	3372	-43.85	-185			377	0	SLV 12	0	No
ini.	2	2408	253.49	-879			377	0	SLV 8	0	No
fin.	2	2357	-197.32	-619			377	0	SLV 8	0	No
ini.	2	-132	237.56	-843			413	160	SLV 3	0.19	No
fin.	2	-676	-316.11	-1011			558	219	SLV 3	0.22	No
ini.	2	475	-221.68	984			377	25	SLV 13	0.03	No
fin.	2	1125	247.09	531			377	0	SLV 13	0	No
ini.	2	-132	237.56	-843			413	160	SLV 4	0.19	No
fin.	2	-676	-316.11	-1011			558	219	SLV 4	0.22	No

Sezione	γM	N	M	V	Vt	Vp	Vt fess. diag.	Vt,lim	Comb.	c.s.	Verifica
ini.	2	2010	-105.2	539			377	0	SLV 15	0	No
fin.	2	2709	195.44	434			377	0	SLV 15	0	No
ini.	2	2010	-105.2	539			377	0	SLV 16	0	No
fin.	2	2709	195.44	434			377	0	SLV 16	0	No
ini.	2	475	-221.68	984			377	25	SLV 14	0.03	No
fin.	2	1125	247.09	531			377	0	SLV 14	0	No

Tabella dei coefficienti di sicurezza minimi

Stato limite	Coeff.s.	Comb.	Verifica
PF_SLV	0.826	SLV 3	No
V_SLV	0	SLV 7	No
PF_SLU	1.579	SLU 31	Si
V_SLU	0	SLU 6	No

Trave di accoppiamento 172

Verifiche condotte secondo D.M. 17-01-18 (N.T.C.)

Dati geometrici

X ini.	Y ini.	Z ini.inf.	Z ini.sup.	H ini.	X fin.	Y fin.	Z fin.inf.	Z fin.sup	H fin.	Luce	Spessore	R. Trazione
-1.889	5.83	11.45	12.35	0.9	-2.889	5.83	11.45	12.35	0.9	1	0.28	30000

Caratteristiche del materiale

(Circolare 7 21-01-19 C8.5.I) Muratura in mattoni pieni e malta di calce LC2_Corti

fb_	fhk	fvk0	fhmedio	τ0	fv0	μ	ϕ	fvk,lim	E	G	FC
120000			172500	9000	20000	0.577	0.767	6500	320000000	128000000	1.2

Verifiche a pressoflessione delle travi in muratura in combinazioni non sismiche

Sezione	γM	N	M	Mu	Comb.	c.s.	Verifica
ini.	3	427	-395.94	1150.68	SLU 70	2.91	Si
fin.	3	-1144	533.19	1150.68	SLU 70	2.16	Si
ini.	3	409	-419.39	1150.68	SLU 74	2.74	Si
fin.	3	-1197	542.56	1150.68	SLU 74	2.12	Si
ini.	3	380	-439.08	1150.68	SLU 83	2.62	Si
fin.	3	-1297	564.44	1150.68	SLU 83	2.04	Si
ini.	3	436	-444.72	1150.68	SLU 77	2.59	Si
fin.	3	-1296	585.84	1150.68	SLU 77	1.96	Si
ini.	3	414	-446.55	1150.68	SLU 80	2.58	Si
fin.	3	-1329	586.43	1150.68	SLU 80	1.96	Si
ini.	3	454	-450.05	1150.68	SLU 78	2.56	Si
fin.	3	-1293	588.06	1150.68	SLU 78	1.96	Si
ini.	3	398	-444.41	1150.68	SLU 84	2.59	Si
fin.	3	-1293	566.66	1150.68	SLU 84	2.03	Si
ini.	3	398	-424.78	1150.68	SLU 76	2.71	Si
fin.	3	-1227	544.63	1150.68	SLU 76	2.11	Si
ini.	3	396	-441.22	1150.68	SLU 79	2.61	Si
fin.	3	-1333	584.21	1150.68	SLU 79	1.97	Si
ini.	3	426	-424.72	1150.68	SLU 75	2.71	Si
fin.	3	-1193	544.78	1150.68	SLU 75	2.11	Si

Verifiche a taglio delle travi in muratura secondo §C8.7.1.3.1 in combinazioni non sismiche

Sezione	γM	N	M	V	Vt	Vp	Vt fess. diag.	Vt,lim	Comb.	c.s.	Verifica
ini.	3	426	-424.72	1675			873	231	SLU 75	0.14	No
fin.	3	-1193	544.78	1783			1303	511	SLU 75	0.29	No
ini.	3	436	-444.72	1734			873	228	SLU 77	0.13	No
fin.	3	-1296	585.84	1956			1340	524	SLU 77	0.27	No
ini.	3	370	-419.09	1724			873	246	SLU 82	0.14	No
fin.	3	-1194	523.39	1617			1303	511	SLU 82	0.32	No
ini.	3	454	-450.05	1750			873	223	SLU 78	0.13	No
fin.	3	-1293	588.06	1967			1339	524	SLU 78	0.27	No
ini.	3	380	-439.08	1784			873	243	SLU 83	0.14	No
fin.	3	-1297	564.44	1790			1340	524	SLU 83	0.29	No
ini.	3	398	-444.41	1799			873	239	SLU 84	0.13	No
fin.	3	-1293	566.66	1801			1339	524	SLU 84	0.29	No
ini.	3	396	-441.22	1746			873	239	SLU 79	0.14	No
fin.	3	-1333	584.21	1927			1353	529	SLU 79	0.27	No
ini.	3	414	-446.55	1762			873	234	SLU 80	0.13	No
fin.	3	-1329	586.43	1938			1352	528	SLU 80	0.27	No
ini.	3	398	-424.78	1697			873	238	SLU 76	0.14	No
fin.	3	-1227	544.63	1762			1315	516	SLU 76	0.29	No
ini.	3	409	-419.39	1659			873	236	SLU 74	0.14	No
fin.	3	-1197	542.56	1772			1304	512	SLU 74	0.29	No

Verifiche a pressoflessione delle travi in muratura in combinazioni sismiche

Sezione	γM	N	M	Mu	Comb.	c.s.	Verifica
ini.	2	1656	-733.04	1726.01	SLV 13	2.35	Si
fin.	2	-1334	676.18	1726.01	SLV 13	2.55	Si
ini.	2	730	-623.19	1726.01	SLV 16	2.77	Si
fin.	2	-2615	924.24	1726.01	SLV 16	1.87	Si
ini.	2	2070	-569.62	1726.01	SLV 10	3.03	Si
fin.	2	1007	66.15	1726.01	SLV 10	26.09	Si
ini.	2	-1590	46.48	1726.01	SLV 7	37.13	Si
fin.	2	-2538	618.16	1726.01	SLV 7	2.79	Si
ini.	2	1656	-733.04	1726.01	SLV 14	2.35	Si
fin.	2	-1334	676.18	1726.01	SLV 14	2.55	Si
ini.	2	-1018	-203.44	1726.01	SLV 12	8.48	Si
fin.	2	-3263	892.99	1726.01	SLV 12	1.93	Si

Sezione	γM	N	M	Mu	Comb.	c.s.	Verifica
ini.	2	2070	-569.62	1726.01	SLV 9	3.03	Si
fin.	2	1007	66.15	1726.01	SLV 9	26.09	Si
ini.	2	730	-623.19	1726.01	SLV 15	2.77	Si
fin.	2	-2615	924.24	1726.01	SLV 15	1.87	Si
ini.	2	-1590	46.48	1726.01	SLV 8	37.13	Si
fin.	2	-2538	618.16	1726.01	SLV 8	2.79	Si
ini.	2	-1018	-203.44	1726.01	SLV 11	8.48	Si
fin.	2	-3263	892.99	1726.01	SLV 11	1.93	Si

Verifiche a taglio delle travi in muratura secondo §C8.7.1.3.1 in combinazioni sismiche

Sezione	γM	N	M	V	Vt	Vp	Vt fess. diag.	Vt,lim	Comb.	c.s.	Verifica
ini.	2	730	-623.19	2675			1310	320	SLV 15	0.12	No
fin.	2	-2615	924.24	3412			2251	865	SLV 15	0.25	No
ini.	2	1656	-733.04	2884			1310	0	SLV 14	0	No
fin.	2	-1334	676.18	2517			1790	707	SLV 14	0.28	No
ini.	2	-250	100.05	-584			1400	540	SLV 1	0.92	No
fin.	2	1084	-239.93	-1198			1310	185	SLV 1	0.15	No
ini.	2	1656	-733.04	2884			1310	0	SLV 13	0	No
fin.	2	-1334	676.18	2517			1790	707	SLV 13	0.28	No
ini.	2	730	-623.19	2675			1310	320	SLV 16	0.12	No
fin.	2	-2615	924.24	3412			2251	865	SLV 16	0.25	No
ini.	2	1498	-319.69	874			1310	0	SLV 5	0	No
fin.	2	1732	-208.68	-942			1310	0	SLV 5	0	No
ini.	2	1498	-319.69	874			1310	0	SLV 6	0	No
fin.	2	1732	-208.68	-942			1310	0	SLV 6	0	No
ini.	2	2070	-569.62	1914			1310	0	SLV 10	0	No
fin.	2	1007	66.15	173			1310	221	SLV 10	1.28	Si
ini.	2	2070	-569.62	1914			1310	0	SLV 9	0	No
fin.	2	1007	66.15	173			1310	221	SLV 9	1.28	Si
ini.	2	-250	100.05	-584			1400	540	SLV 2	0.92	No
fin.	2	1084	-239.93	-1198			1310	185	SLV 2	0.15	No

Tabella dei coefficienti di sicurezza minimi

Stato limite	Coeff.s.	Comb.	Verifica
PF_SLV	1.868	SLV 15	Si
V_SLV	0	SLV 5	No
PF_SLU	1.957	SLU 78	Si
V_SLU	0.127	SLU 78	No

Trave di accoppiamento 173

Verifiche condotte secondo D.M. 17-01-18 (N.T.C.)

Dati geometrici

X ini.	Y ini.	Z ini.inf.	Z ini.sup.	H ini.	X fin.	Y fin.	Z fin.inf.	Z fin.sup	H fin.	Luce	Spessore	R. Trazione
-1.889	5.83	14.25	14.6	0.35	-2.889	5.83	14.25	14.6	0.35	1	0.28	30000

Caratteristiche del materiale

(Circolare 7 21-01-19 C8.5.I) Muratura in mattoni pieni e malta di calce LC2_Corti

fb_	fhk	fvk0	fhmedio	τ0	fv0	μ	ϕ	fvk,lim	E	G	FC
120000			172500	9000	20000	0.577	0.767	6500	320000000	128000000	1.2

Verifiche a pressoflessione delle travi in muratura in combinazioni non sismiche

Sezione	γM	N	M	Mu	Comb.	c.s.	Verifica
ini.	3	-420	-145.09	174.02	SLU 76	1.2	Si
fin.	3	403	103.28	174.02	SLU 76	1.68	Si
ini.	3	-473	-154.46	174.02	SLU 84	1.13	Si
fin.	3	415	111.53	174.02	SLU 84	1.56	Si
ini.	3	-501	-158.34	174.02	SLU 74	1.1	Si
fin.	3	351	96.2	174.02	SLU 74	1.81	Si
ini.	3	-435	-160.44	174.02	SLU 82	1.08	Si
fin.	3	444	113.94	174.02	SLU 82	1.53	Si
ini.	3	-539	-152.36	174.02	SLU 77	1.14	Si
fin.	3	322	93.79	174.02	SLU 77	1.86	Si
ini.	3	-497	-154.57	174.02	SLU 83	1.13	Si
fin.	3	397	110.89	174.02	SLU 83	1.57	Si
ini.	3	-382	-151.07	174.02	SLU 73	1.15	Si
fin.	3	432	105.69	174.02	SLU 73	1.65	Si
ini.	3	-459	-160.55	174.02	SLU 81	1.08	Si
fin.	3	426	113.3	174.02	SLU 81	1.54	Si
ini.	3	-477	-158.23	174.02	SLU 75	1.1	Si
fin.	3	368	96.84	174.02	SLU 75	1.8	Si
ini.	3	-515	-152.25	174.02	SLU 78	1.14	Si
fin.	3	339	94.43	174.02	SLU 78	1.84	Si

Verifiche a taglio delle travi in muratura secondo §C8.7.1.3.1 in combinazioni non sismiche

Sezione	γM	N	M	V	Vt	Vp	Vt fess. diag.	Vt,lim	Comb.	c.s.	Verifica
ini.	3	-428	-140.48	580			366	144	SLU 39	0.25	No
fin.	3	368	102.02	181			252	0	SLU 39	0	No
ini.	3	-344	-140.54	608			343	136	SLU 61	0.22	No
fin.	3	399	97.34	145			252	0	SLU 61	0	No
ini.	3	-202	-109.49	506			306	120	SLU 44	0.24	No
fin.	3	334	68.87	45			252	0	SLU 44	0	No
ini.	3	-368	-140.65	609			350	138	SLU 60	0.23	No
fin.	3	381	96.71	144			252	0	SLU 60	0	No
ini.	3	-466	-134.51	554			376	147	SLU 41	0.27	No
fin.	3	339	99.62	120			252	0	SLU 41	0	No

Sezione	γM	N	M	V	Vt	Vp	Vt fess. diag.	Vt,lim	Comb.	c.s.	Verifica
ini.	3	-328	-125.2	552			339	134	SLU 55	0.24	No
fin.	3	358	86.69	55			252	0	SLU 55	0	No
ini.	3	-403	-140.37	579			359	142	SLU 40	0.24	No
fin.	3	385	102.66	181			252	0	SLU 40	0	No
ini.	3	-497	-154.57	653			384	150	SLU 83	0.23	No
fin.	3	397	110.89	121			252	0	SLU 83	0	No
ini.	3	-441	-134.39	554			369	145	SLU 42	0.26	No
fin.	3	356	100.26	121			252	0	SLU 42	0	No
ini.	3	-290	-131.18	577			329	130	SLU 52	0.23	No
fin.	3	387	89.1	116			252	0	SLU 52	0	No

Verifiche a pressoflessione delle travi in muratura in combinazioni sismiche

Sezione	γM	N	M	Mu	Comb.	c.s.	Verifica
ini.	2	211	-51.96	261.03	SLV 1	5.02	Si
fin.	2	1916	326.52	261.03	SLV 1	0.8	No
ini.	2	-734	-151.02	261.03	SLV 15	1.73	Si
fin.	2	-1367	-192.41	261.03	SLV 15	1.36	Si
ini.	2	-734	-151.02	261.03	SLV 16	1.73	Si
fin.	2	-1367	-192.41	261.03	SLV 16	1.36	Si
ini.	2	-1883	-92.35	261.03	SLV 3	2.83	Si
fin.	2	-707	256.69	261.03	SLV 3	1.02	Si
ini.	2	3055	-25.38	261.03	SLV 6	10.29	Si
fin.	2	4745	250.8	261.03	SLV 6	1.04	Si
ini.	2	3055	-25.38	261.03	SLV 5	10.29	Si
fin.	2	4745	250.8	261.03	SLV 5	1.04	Si
ini.	2	-1883	-92.35	261.03	SLV 4	2.83	Si
fin.	2	-707	256.69	261.03	SLV 4	1.02	Si
ini.	2	-3578	-177.6	261.03	SLV 12	1.47	Si
fin.	2	-4196	-116.7	261.03	SLV 12	2.24	Si
ini.	2	-3578	-177.6	261.03	SLV 11	1.47	Si
fin.	2	-4196	-116.7	261.03	SLV 11	2.24	Si
ini.	2	211	-51.96	261.03	SLV 2	5.02	Si
fin.	2	1916	326.52	261.03	SLV 2	0.8	No

Verifiche a taglio delle travi in muratura secondo §C8.7.1.3.1 in combinazioni sismiche

Sezione	γM	N	M	V	Vt	Vp	Vt fess. diag.	Vt,lim	Comb.	c.s.	Verifica
ini.	2	211	-51.96	487			377	107	SLV 1	0.22	No
fin.	2	1916	326.52	384			377	0	SLV 1	0	No
ini.	2	1359	-110.63	398			377	0	SLV 13	0	No
fin.	2	1256	-122.58	103			377	0	SLV 13	0	No
ini.	2	1359	-110.63	398			377	0	SLV 14	0	No
fin.	2	1256	-122.58	103			377	0	SLV 14	0	No
ini.	2	3399	-42.98	415			377	0	SLV 9	0	No
fin.	2	4547	116.07	598			377	0	SLV 9	0	No
ini.	2	3055	-25.38	442			377	0	SLV 5	0	No
fin.	2	4745	250.8	682			377	0	SLV 5	0	No
ini.	2	211	-51.96	487			377	107	SLV 2	0.22	No
fin.	2	1916	326.52	384			377	0	SLV 2	0	No
ini.	2	-734	-151.02	411			573	224	SLV 15	0.55	No
fin.	2	-1367	-192.41	-237			742	276	SLV 15	1.17	Si
ini.	2	3055	-25.38	442			377	0	SLV 6	0	No
fin.	2	4745	250.8	682			377	0	SLV 6	0	No
ini.	2	-734	-151.02	411			573	224	SLV 16	0.55	No
fin.	2	-1367	-192.41	-237			742	276	SLV 16	1.17	Si
ini.	2	3399	-42.98	415			377	0	SLV 10	0	No
fin.	2	4547	116.07	598			377	0	SLV 10	0	No

Tabella dei coefficienti di sicurezza minimi

Stato limite	Coeff.s.	Comb.	Verifica
PF_SLV	0.799	SLV 1	No
V_SLV	0	SLV 1	No
PF_SLU	1.084	SLU 81	Si
V_SLU	0	SLU 10	No

Trave di accoppiamento 174

Verifiche condotte secondo D.M. 17-01-18 (N.T.C.)

Dati geometrici

X ini.	Y ini.	Z ini.inf.	Z ini.sup.	H ini.	X fin.	Y fin.	Z fin.inf.	Z fin.sup	H fin.	Luce	Spessore	R. Trazione
-0.134	1.387	13.55	14.6	1.05	-0.134	2.187	13.55	14.6	1.05	0.8	0.28	30000

Caratteristiche del materiale

(Circolare 7 21-01-19 C8.5.I) Muratura in mattoni pieni e malta di calce LC2_Corti

fb_	fhk	fvk0	fhmedio	τ0	fv0	μ	ϕ	fvk,lim	E	G	FC
120000			172500	9000	20000	0.577	0.767	6500	320000000	128000000	1.2

Verifiche a pressoflessione delle travi in muratura in combinazioni non sismiche

Sezione	γM	N	M	Mu	Comb.	c.s.	Verifica
ini.	3	1238	277.35	1566.2	SLU 34	5.65	Si
fin.	3	1043	-167.81	1566.2	SLU 34	9.33	Si
ini.	3	1757	293.48	1566.2	SLU 78	5.34	Si
fin.	3	1563	-198.23	1566.2	SLU 78	7.9	Si
ini.	3	1635	296.69	1566.2	SLU 84	5.28	Si
fin.	3	1429	-198.71	1566.2	SLU 84	7.88	Si
ini.	3	1264	287.46	1566.2	SLU 73	5.45	Si
fin.	3	1078	-161.64	1566.2	SLU 73	9.69	Si

Sezione	γM	N	M	Mu	Comb.	c.s.	Verifica
ini.	3	1551	280.24	1566.2	SLU 36	5.59	Si
fin.	3	1335	-200.8	1566.2	SLU 36	7.8	Si
ini.	3	1577	290.35	1566.2	SLU 75	5.39	Si
fin.	3	1371	-194.63	1566.2	SLU 75	8.05	Si
ini.	3	1443	290.59	1566.2	SLU 76	5.39	Si
fin.	3	1270	-165.24	1566.2	SLU 76	9.48	Si
ini.	3	1430	283.45	1566.2	SLU 42	5.53	Si
fin.	3	1202	-201.28	1566.2	SLU 42	7.78	Si
ini.	3	1251	280.32	1566.2	SLU 40	5.59	Si
fin.	3	1010	-197.68	1566.2	SLU 40	7.92	Si
ini.	3	1456	293.56	1566.2	SLU 82	5.34	Si
fin.	3	1237	-195.11	1566.2	SLU 82	8.03	Si

Verifiche a taglio delle travi in muratura secondo §C8.7.1.3.1 in combinazioni non sismiche

Sezione	γM	N	M	V	Vt	Vp	Vt fess. diag.	Vt,lim	Comb.	c.s.	Verifica
ini.	3	1515	217.96	-276			1132	0	SLU 59	0	No
fin.	3	1443	-116.27	-1191			1132	0	SLU 59	0	No
ini.	3	1235	237.68	-324			1132	0	SLU 61	0	No
fin.	3	1099	-135.85	-1074			1132	0	SLU 61	0	No
ini.	3	1536	237.6	-352			1132	0	SLU 57	0	No
fin.	3	1424	-138.97	-1254			1132	0	SLU 57	0	No
ini.	3	1526	204.65	-346			1132	0	SLU 53	0	No
fin.	3	1411	-145.39	-1145			1132	0	SLU 53	0	No
ini.	3	1404	207.86	-340			1132	0	SLU 60	0	No
fin.	3	1277	-145.87	-1069			1132	0	SLU 60	0	No
ini.	3	1223	234.71	-243			1132	0	SLU 55	0	No
fin.	3	1132	-105.98	-1090			1132	0	SLU 55	0	No
ini.	3	1685	188.14	-293			1132	0	SLU 58	0	No
fin.	3	1622	-126.29	-1187			1132	0	SLU 58	0	No
ini.	3	1356	234.47	-329			1132	0	SLU 54	0	No
fin.	3	1232	-135.37	-1149			1132	0	SLU 54	0	No
ini.	3	1705	207.78	-368			1132	0	SLU 56	0	No
fin.	3	1603	-148.99	-1249			1132	0	SLU 56	0	No
ini.	3	1430	283.45	-591			1132	0	SLU 42	0	No
fin.	3	1202	-201.28	-1296			1132	0	SLU 42	0	No

Verifiche a pressoflessione delle travi in muratura in combinazioni sismiche

Sezione	γM	N	M	Mu	Comb.	c.s.	Verifica
ini.	2	-242	1008.15	2349.3	SLV 7	2.33	Si
fin.	2	-291	-306.43	2349.3	SLV 7	7.67	Si
ini.	2	2346	-725.56	2349.3	SLV 10	3.24	Si
fin.	2	2257	118.57	2349.3	SLV 10	19.81	Si
ini.	2	1635	684.36	2349.3	SLV 12	3.43	Si
fin.	2	215	-219.74	2349.3	SLV 12	10.69	Si
ini.	2	-2182	892.44	2349.3	SLV 3	2.63	Si
fin.	2	-166	-289.17	2349.3	SLV 3	8.12	Si
ini.	2	4287	-609.84	2349.3	SLV 14	3.85	Si
fin.	2	2133	101.3	2349.3	SLV 14	23.19	Si
ini.	2	4287	-609.84	2349.3	SLV 13	3.85	Si
fin.	2	2133	101.3	2349.3	SLV 13	23.19	Si
ini.	2	-242	1008.15	2349.3	SLV 8	2.33	Si
fin.	2	-291	-306.43	2349.3	SLV 8	7.67	Si
ini.	2	1635	684.36	2349.3	SLV 11	3.43	Si
fin.	2	215	-219.74	2349.3	SLV 11	10.69	Si
ini.	2	2346	-725.56	2349.3	SLV 9	3.24	Si
fin.	2	2257	118.57	2349.3	SLV 9	19.81	Si
ini.	2	-2182	892.44	2349.3	SLV 4	2.63	Si
fin.	2	-166	-289.17	2349.3	SLV 4	8.12	Si

Verifiche a taglio delle travi in muratura secondo §C8.7.1.3.1 in combinazioni sismiche

Sezione	γM	N	M	V	Vt	Vp	Vt fess. diag.	Vt,lim	Comb.	c.s.	Verifica
ini.	2	4073	-186.87	-212			1698	0	SLV 16	0	No
fin.	2	1520	-0.19	-638			1698	0	SLV 16	0	No
ini.	2	1635	684.36	-1175			1698	0	SLV 12	0	No
fin.	2	215	-219.74	-2397			1698	590	SLV 12	0.25	No
ini.	2	470	-401.77	779			1698	527	SLV 6	0.68	No
fin.	2	1751	31.87	844			1698	0	SLV 6	0	No
ini.	2	4287	-609.84	430			1698	0	SLV 14	0	No
fin.	2	2133	101.3	458			1698	0	SLV 14	0	No
ini.	2	1635	684.36	-1175			1698	0	SLV 11	0	No
fin.	2	215	-219.74	-2397			1698	590	SLV 11	0.25	No
ini.	2	2346	-725.56	963			1698	0	SLV 10	0	No
fin.	2	2257	118.57	1256			1698	0	SLV 10	0	No
ini.	2	2346	-725.56	963			1698	0	SLV 9	0	No
fin.	2	2257	118.57	1256			1698	0	SLV 9	0	No
ini.	2	4287	-609.84	430			1698	0	SLV 13	0	No
fin.	2	2133	101.3	458			1698	0	SLV 13	0	No
ini.	2	4073	-186.87	-212			1698	0	SLV 15	0	No
fin.	2	1520	-0.19	-638			1698	0	SLV 15	0	No
ini.	2	470	-401.77	779			1698	527	SLV 5	0.68	No
fin.	2	1751	31.87	844			1698	0	SLV 5	0	No

Tabella dei coefficienti di sicurezza minimi

Stato limite	Coeff.s.	Comb.	Verifica
PF_SLV	2.33	SLV 7	Si
V_SLV	0	SLV 5	No
PF_SLU	5.279	SLU 84	Si
V_SLU	0	SLU 3	No

Trave di accoppiamento 175

Verifiche condotte secondo D.M. 17-01-18 (N.T.C.)

Dati geometrici

X ini.	Y ini.	Z ini.inf.	Z ini.sup.	H ini.	X fin.	Y fin.	Z fin.inf.	Z fin.sup	H fin.	Luce	Spessore	R. Trazione
-16.992	-4.589	13.42	14.018	0.598	-16.992	-3.499	13.42	14.566	1.146	1.09	0.3	30000

Caratteristiche del materiale

(Circolare 7 21-01-19 C8.5.I) Muratura in mattoni pieni e malta di calce LC2_Corti

fb_	fhk	fvk0	fhmedio	τ0	fv0	μ	ϕ	fvk,lim	E	G	FC
120000			172500	9000	20000	0.577	0.767	6500	320000000	128000000	1.2

Verifiche a pressoflessione delle travi in muratura in combinazioni non sismiche

Sezione	γM	N	M	Mu	Comb.	c.s.	Verifica
ini.	3	7	33.97	544.15	SLU 83	16.02	Si
fin.	3	75	14	1997.76	SLU 83	142.69	Si
ini.	3	10	30.44	544.15	SLU 66	17.88	Si
fin.	3	57	15.79	1997.76	SLU 66	126.56	Si
ini.	3	13	31.39	544.15	SLU 56	17.34	Si
fin.	3	63	21.26	1997.76	SLU 56	93.95	Si
ini.	3	8	34.76	544.15	SLU 77	15.66	Si
fin.	3	66	21.1	1997.76	SLU 77	94.68	Si
ini.	3	5	33.75	544.15	SLU 74	16.12	Si
fin.	3	61	13.04	1997.76	SLU 74	153.15	Si
ini.	3	12	30.6	544.15	SLU 62	17.78	Si
fin.	3	73	14.16	1997.76	SLU 62	141.04	Si
ini.	3	13	31.44	544.15	SLU 69	17.31	Si
fin.	3	61	23.84	1997.76	SLU 69	83.8	Si
ini.	3	13	33.55	544.15	SLU 79	16.22	Si
fin.	3	78	23.23	1997.76	SLU 79	86	Si
ini.	3	10	30.39	544.15	SLU 53	17.91	Si
fin.	3	59	13.21	1997.76	SLU 53	151.24	Si
ini.	3	4	32.96	544.15	SLU 81	16.51	Si
fin.	3	71	5.95	1997.76	SLU 81	336.02	Si

Verifiche a taglio delle travi in muratura secondo §C8.7.1.3.1 in combinazioni non sismiche

Sezione	γM	N	M	V	Vt	Vp	Vt fess. diag.	Vt,lim	Comb.	c.s.	Verifica
ini.	3	102	26.01	199			461	158	SLU 78	0.8	No
fin.	3	85	2.84	-236			1324	479	SLU 78	2.03	Si
ini.	3	175	11.29	186			461	146	SLU 47	0.78	No
fin.	3	99	-12.35	-298			1324	476	SLU 47	1.6	Si
ini.	3	163	16.97	200			461	148	SLU 73	0.74	No
fin.	3	102	-23.31	-342			1324	476	SLU 73	1.39	Si
ini.	3	166	17.97	202			461	147	SLU 76	0.73	No
fin.	3	106	-15.25	-319			1324	475	SLU 76	1.49	Si
ini.	3	168	13.65	191			461	147	SLU 65	0.77	No
fin.	3	97	-20.57	-326			1324	477	SLU 65	1.46	Si
ini.	3	106	24.81	200			461	157	SLU 80	0.79	No
fin.	3	97	4.97	-245			1324	477	SLU 80	1.94	Si
ini.	3	101	25.22	201			461	158	SLU 84	0.79	No
fin.	3	95	-4.26	-275			1324	477	SLU 84	1.73	Si
ini.	3	168	13.6	192			461	147	SLU 52	0.77	No
fin.	3	99	-23.14	-338			1324	476	SLU 52	1.41	Si
ini.	3	171	14.65	194			461	146	SLU 68	0.76	No
fin.	3	101	-12.51	-303			1324	476	SLU 68	1.57	Si
ini.	3	171	14.6	195			461	147	SLU 55	0.75	No
fin.	3	103	-15.09	-314			1324	475	SLU 55	1.51	Si

Verifiche a pressoflessione delle travi in muratura in combinazioni sismiche

Sezione	γM	N	M	Mu	Comb.	c.s.	Verifica
ini.	2	-1521	239.84	816.23	SLV 13	3.4	Si
fin.	2	-140	39.38	2996.65	SLV 13	76.1	Si
ini.	2	2092	-305.23	816.23	SLV 12	2.67	Si
fin.	2	898	-366.61	2996.65	SLV 12	8.17	Si
ini.	2	2092	-305.23	816.23	SLV 11	2.67	Si
fin.	2	898	-366.61	2996.65	SLV 11	8.17	Si
ini.	2	-1521	239.84	816.23	SLV 14	3.4	Si
fin.	2	-140	39.38	2996.65	SLV 14	76.1	Si
ini.	2	-2076	349.06	816.23	SLV 6	2.34	Si
fin.	2	-798	380.29	2996.65	SLV 6	7.88	Si
ini.	2	-2573	415	816.23	SLV 10	1.97	Si
fin.	2	-762	336.53	2996.65	SLV 10	8.9	Si
ini.	2	-2573	415	816.23	SLV 9	1.97	Si
fin.	2	-762	336.53	2996.65	SLV 9	8.9	Si
ini.	2	2590	-371.16	816.23	SLV 8	2.2	Si
fin.	2	863	-322.85	2996.65	SLV 8	9.28	Si
ini.	2	2590	-371.16	816.23	SLV 7	2.2	Si
fin.	2	863	-322.85	2996.65	SLV 7	9.28	Si
ini.	2	-2076	349.06	816.23	SLV 5	2.34	Si
fin.	2	-798	380.29	2996.65	SLV 5	7.88	Si

Verifiche a taglio delle travi in muratura secondo §C8.7.1.3.1 in combinazioni sismiche

Sezione	γM	N	M	V	Vt	Vp	Vt fess. diag.	Vt,lim	Comb.	c.s.	Verifica
ini.	2	1538	-196.01	841			691	0	SLV 4	0	No
fin.	2	240	-25.7	-497			1985	693	SLV 4	1.39	Si
ini.	2	-121	23.78	-538			723	277	SLV 15	0.51	No
fin.	2	358	-171.57	-467			1985	665	SLV 15	1.42	Si
ini.	2	2590	-371.16	391			691	0	SLV 7	0	No
fin.	2	863	-322.85	-1245			1985	527	SLV 7	0.42	No

Sezione	γM	N	M	V	Vt	Vp	Vt fess. diag.	Vt,lim	Comb.	c.s.	Verifica
ini.	2	2590	-371.16	391			691	0	SLV 8	0	No
fin.	2	863	-322.85	-1245			1985	527	SLV 8	0.42	No
ini.	2	-121	23.78	-538			723	277	SLV 16	0.51	No
fin.	2	358	-171.57	-467			1985	665	SLV 16	1.42	Si
ini.	2	1538	-196.01	841			691	0	SLV 3	0	No
fin.	2	240	-25.7	-497			1985	693	SLV 3	1.39	Si
ini.	2	138	20.06	813			691	239	SLV 2	0.29	No
fin.	2	-258	185.24	153			2089	801	SLV 2	5.24	Si
ini.	2	2092	-305.23	-23			691	0	SLV 11	0	No
fin.	2	898	-366.61	-1236			1985	516	SLV 11	0.42	No
ini.	2	2092	-305.23	-23			691	0	SLV 12	0	No
fin.	2	898	-366.61	-1236			1985	516	SLV 12	0.42	No
ini.	2	138	20.06	813			691	239	SLV 1	0.29	No
fin.	2	-258	185.24	153			2089	801	SLV 1	5.24	Si

Tabella dei coefficienti di sicurezza minimi

Stato limite	Coeff.s.	Comb.	Verifica
PF_SLV	1.967	SLV 9	Si
V_SLV	0	SLV 3	No
PF_SLU	15.656	SLU 77	Si
V_SLU	0.728	SLU 76	No

Trave di accoppiamento 176

Verifiche condotte secondo D.M. 17-01-18 (N.T.C.)

Dati geometrici

X ini.	Y ini.	Z ini.inf.	Z ini.sup.	H ini.	X fin.	Y fin.	Z fin.inf.	Z fin.sup	H fin.	Luce	Spessore	R. Trazione
-14.61	-4.784	13.42	13.918	0.498	-16.45	-4.784	13.42	13.92	0.5	1.84	0.3	30000

Caratteristiche del materiale

(Circolare 7 21-01-19 C8.5.I) Muratura in mattoni pieni e malta di calce LC2_Corti

fb_	fhk	fvk0	fhmedio	τ0	fv0	μ	ϕ	fvk,lim	E	G	FC
120000			172500	9000	20000	0.577	0.767	6500	320000000	128000000	1.2

Verifiche a pressoflessione delle travi in muratura in combinazioni non sismiche

Sezione	γM	N	M	Mu	Comb.	c.s.	Verifica
ini.	3	-575	-206.03	377.99	SLU 80	1.83	Si
fin.	3	126	56.4	380.26	SLU 80	6.74	Si
ini.	3	-530	-192.6	377.99	SLU 57	1.96	Si
fin.	3	125	53.51	380.26	SLU 57	7.11	Si
ini.	3	-582	-204.73	377.99	SLU 76	1.85	Si
fin.	3	150	67.59	380.26	SLU 76	5.63	Si
ini.	3	-555	-200.48	377.99	SLU 68	1.89	Si
fin.	3	158	66.98	380.26	SLU 68	5.68	Si
ini.	3	-559	-195.12	377.99	SLU 84	1.94	Si
fin.	3	116	56.43	380.26	SLU 84	6.74	Si
ini.	3	-569	-202.84	377.99	SLU 78	1.86	Si
fin.	3	125	56.24	380.26	SLU 78	6.76	Si
ini.	3	-543	-194.49	377.99	SLU 55	1.94	Si
fin.	3	150	64.85	380.26	SLU 55	5.86	Si
ini.	3	-536	-195.8	377.99	SLU 59	1.93	Si
fin.	3	126	53.66	380.26	SLU 59	7.09	Si
ini.	3	-548	-201.78	377.99	SLU 72	1.87	Si
fin.	3	134	55.79	380.26	SLU 72	6.82	Si
ini.	3	-543	-198.59	377.99	SLU 70	1.9	Si
fin.	3	134	55.63	380.26	SLU 70	6.84	Si

Verifiche a taglio delle travi in muratura secondo §C8.7.1.3.1 in combinazioni non sismiche

Sezione	γM	N	M	V	Vt	Vp	Vt fess. diag.	Vt,lim	Comb.	c.s.	Verifica
ini.	3	-548	-201.78	866			530	209	SLU 72	0.24	No
fin.	3	134	55.79	-304			385	124	SLU 72	0.41	No
ini.	3	-530	-192.6	831			525	208	SLU 57	0.25	No
fin.	3	125	53.51	-296			385	125	SLU 57	0.42	No
ini.	3	-569	-202.84	862			536	211	SLU 78	0.25	No
fin.	3	125	56.24	-300			385	125	SLU 78	0.42	No
ini.	3	-504	-188.35	824			518	205	SLU 49	0.25	No
fin.	3	134	52.9	-297			385	124	SLU 49	0.42	No
ini.	3	-510	-191.55	835			520	205	SLU 51	0.25	No
fin.	3	135	53.05	-300			385	124	SLU 51	0.41	No
ini.	3	-536	-195.8	842			527	208	SLU 59	0.25	No
fin.	3	126	53.66	-299			385	125	SLU 59	0.42	No
ini.	3	-543	-198.59	855			529	209	SLU 70	0.24	No
fin.	3	134	55.63	-301			385	124	SLU 70	0.41	No
ini.	3	-575	-206.03	873			537	212	SLU 80	0.24	No
fin.	3	126	56.4	-303			385	125	SLU 80	0.41	No
ini.	3	-524	-188.89	831			524	207	SLU 79	0.25	No
fin.	3	80	39.27	-349			385	133	SLU 79	0.38	No
ini.	3	-498	-184.65	824			517	204	SLU 71	0.25	No
fin.	3	89	38.66	-350			385	131	SLU 71	0.38	No

Verifiche a pressoflessione delle travi in muratura in combinazioni sismiche

Sezione	γM	N	M	Mu	Comb.	c.s.	Verifica
ini.	2	1040	382.92	566.99	SLV 5	1.48	Si
fin.	2	-845	-365.46	570.4	SLV 5	1.56	Si
ini.	2	-1720	-625.74	566.99	SLV 11	0.91	No
fin.	2	957	423.37	570.4	SLV 11	1.35	Si

Sezione	γM	N	M	Mu	Comb.	c.s.	Verifica
ini.	2	-1318	-549.5	566.99	SLV 7	1.03	Si
fin.	2	928	338.32	570.4	SLV 7	1.69	Si
ini.	2	638	306.68	566.99	SLV 9	1.85	Si
fin.	2	-815	-280.42	570.4	SLV 9	2.03	Si
ini.	2	-1364	-388.35	566.99	SLV 15	1.46	Si
fin.	2	371	276.27	570.4	SLV 15	2.06	Si
ini.	2	638	306.68	566.99	SLV 10	1.85	Si
fin.	2	-815	-280.42	570.4	SLV 10	2.03	Si
ini.	2	-1720	-625.74	566.99	SLV 12	0.91	No
fin.	2	957	423.37	570.4	SLV 12	1.35	Si
ini.	2	-1318	-549.5	566.99	SLV 8	1.03	Si
fin.	2	928	338.32	570.4	SLV 8	1.69	Si
ini.	2	1040	382.92	566.99	SLV 6	1.48	Si
fin.	2	-845	-365.46	570.4	SLV 6	1.56	Si
ini.	2	-1364	-388.35	566.99	SLV 16	1.46	Si
fin.	2	371	276.27	570.4	SLV 16	2.06	Si

Verifiche a taglio delle travi in muratura secondo §C8.7.1.3.1 in combinazioni sismiche

Sezione	γM	N	M	V	Vt	Vp	Vt fess. diag.	Vt,lim	Comb.	c.s.	Verifica
ini.	2	684	145.53	267			576	63	SLV 1	0.24	No
fin.	2	-259	-218.36	-758			647	252	SLV 1	0.33	No
ini.	2	638	306.68	-457			576	83	SLV 10	0.18	No
fin.	2	-815	-280.42	-1399			795	314	SLV 10	0.22	No
ini.	2	-1318	-549.5	1525			927	360	SLV 7	0.24	No
fin.	2	928	338.32	967			577	0	SLV 7	0	No
ini.	2	-1720	-625.74	1508			1034	394	SLV 11	0.26	No
fin.	2	957	423.37	1070			577	0	SLV 11	0	No
ini.	2	638	306.68	-457			576	83	SLV 9	0.18	No
fin.	2	-815	-280.42	-1399			795	314	SLV 9	0.22	No
ini.	2	684	145.53	267			576	63	SLV 2	0.24	No
fin.	2	-259	-218.36	-758			647	252	SLV 2	0.33	No
ini.	2	1040	382.92	-441			576	0	SLV 6	0	No
fin.	2	-845	-365.46	-1502			803	317	SLV 6	0.21	No
ini.	2	-1318	-549.5	1525			927	360	SLV 8	0.24	No
fin.	2	928	338.32	967			577	0	SLV 8	0	No
ini.	2	-1720	-625.74	1508			1034	394	SLV 12	0.26	No
fin.	2	957	423.37	1070			577	0	SLV 12	0	No
ini.	2	1040	382.92	-441			576	0	SLV 5	0	No
fin.	2	-845	-365.46	-1502			803	317	SLV 5	0.21	No

Tabella dei coefficienti di sicurezza minimi

Stato limite	Coeff.s.	Comb.	Verifica
PF_SLV	0.906	SLV 11	No
V_SLV	0	SLV 5	No
PF_SLU	1.835	SLU 80	Si
V_SLU	0.242	SLU 72	No

Trave di accoppiamento 177

Verifiche condotte secondo D.M. 17-01-18 (N.T.C.)

Dati geometrici

X ini.	Y ini.	Z ini.inf.	Z ini.sup.	H ini.	X fin.	Y fin.	Z fin.inf.	Z fin.sup	H fin.	Luce	Spessore	R. Trazione
-8.05	-4.784	13.42	13.913	0.493	-9.89	-4.784	13.42	13.915	0.495	1.84	0.3	30000

Caratteristiche del materiale

(Circolare 7 21-01-19 C8.5.I) Muratura in mattoni pieni e malta di calce LC2_Corti

fb_	fhk	fvk0	fhmedio	τ0	fv0	μ	ϕ	fvk,lim	E	G	FC
120000			172500	9000	20000	0.577	0.767	6500	320000000	128000000	1.2

Verifiche a pressoflessione delle travi in muratura in combinazioni non sismiche

Sezione	γM	N	M	Mu	Comb.	c.s.	Verifica
ini.	3	-56	17.09	369.95	SLU 76	21.64	Si
fin.	3	-326	-69.41	372.2	SLU 76	5.36	Si
ini.	3	-106	5.42	369.95	SLU 79	68.32	Si
fin.	3	-329	-70.45	372.2	SLU 79	5.28	Si
ini.	3	-72	12.05	369.95	SLU 84	30.7	Si
fin.	3	-327	-69.14	372.2	SLU 84	5.38	Si
ini.	3	-105	5.44	369.95	SLU 77	68	Si
fin.	3	-324	-69.06	372.2	SLU 77	5.39	Si
ini.	3	-80	12.66	369.95	SLU 78	29.21	Si
fin.	3	-332	-71.01	372.2	SLU 78	5.24	Si
ini.	3	-82	13.17	369.95	SLU 72	28.08	Si
fin.	3	-323	-70.01	372.2	SLU 72	5.32	Si
ini.	3	-80	12.42	369.95	SLU 59	29.78	Si
fin.	3	-315	-68.1	372.2	SLU 59	5.47	Si
ini.	3	-82	12.64	369.95	SLU 80	29.27	Si
fin.	3	-337	-72.4	372.2	SLU 80	5.14	Si
ini.	3	-81	13.2	369.95	SLU 70	28.03	Si
fin.	3	-318	-68.62	372.2	SLU 70	5.42	Si
ini.	3	-107	5.95	369.95	SLU 71	62.17	Si
fin.	3	-315	-68.06	372.2	SLU 71	5.47	Si

Verifiche a taglio delle travi in muratura secondo §C8.7.1.3.1 in combinazioni non sismiche

Sezione	γM	N	M	V	Vt	Vp	Vt fess. diag.	Vt,lim	Comb.	c.s.	Verifica
ini.	3	-105	5.2	409			408	157	SLU 58	0.38	No
fin.	3	-307	-66.15	-287			463	183	SLU 58	0.64	No

Sezione	γM	N	M	V	Vt	Vp	Vt fess. diag.	Vt,lim	Comb.	c.s.	Verifica
ini.	3	-105	5.44	411			408	157	SLU 77	0.38	No
fin.	3	-324	-69.06	-292			467	184	SLU 77	0.63	No
ini.	3	-103	5.23	404			407	157	SLU 56	0.39	No
fin.	3	-302	-64.76	-281			462	182	SLU 56	0.65	No
ini.	3	-107	5.95	424			408	158	SLU 71	0.37	No
fin.	3	-315	-68.06	-298			465	183	SLU 71	0.62	No
ini.	3	-104	5.76	412			407	157	SLU 48	0.38	No
fin.	3	-288	-62.37	-281			458	180	SLU 48	0.64	No
ini.	3	-82	13.17	380			402	154	SLU 72	0.41	No
fin.	3	-323	-70.01	-310			467	184	SLU 72	0.6	No
ini.	3	-105	5.74	417			408	157	SLU 50	0.38	No
fin.	3	-293	-63.76	-287			459	181	SLU 50	0.63	No
ini.	3	-106	5.42	416			408	158	SLU 79	0.38	No
fin.	3	-329	-70.45	-298			469	185	SLU 79	0.62	No
ini.	3	-81	13.2	375			401	154	SLU 70	0.41	No
fin.	3	-318	-68.62	-304			466	184	SLU 70	0.6	No
ini.	3	-105	5.98	419			408	157	SLU 69	0.38	No
fin.	3	-310	-66.67	-292			463	183	SLU 69	0.63	No

Verifiche a pressoflessione delle travi in muratura in combinazioni sismiche

Sezione	γM	N	M	Mu	Comb.	c.s.	Verifica
ini.	2	282	154.49	554.92	SLV 8	3.59	Si
fin.	2	-939	-237.47	558.29	SLV 8	2.35	Si
ini.	2	-416	-146.84	554.92	SLV 10	3.78	Si
fin.	2	508	146.46	558.29	SLV 10	3.81	Si
ini.	2	-542	-165.15	554.92	SLV 5	3.36	Si
fin.	2	-63	92.98	558.29	SLV 5	6	Si
ini.	2	-154	21.26	554.92	SLV 4	26.1	Si
fin.	2	-1298	-184.2	558.29	SLV 4	3.03	Si
ini.	2	-154	21.26	554.92	SLV 3	26.1	Si
fin.	2	-1298	-184.2	558.29	SLV 3	3.03	Si
ini.	2	-542	-165.15	554.92	SLV 6	3.36	Si
fin.	2	-63	92.98	558.29	SLV 6	6	Si
ini.	2	282	154.49	554.92	SLV 7	3.59	Si
fin.	2	-939	-237.47	558.29	SLV 7	2.35	Si
ini.	2	409	172.79	554.92	SLV 11	3.21	Si
fin.	2	-369	-184	558.29	SLV 11	3.03	Si
ini.	2	409	172.79	554.92	SLV 12	3.21	Si
fin.	2	-369	-184	558.29	SLV 12	3.03	Si
ini.	2	-416	-146.84	554.92	SLV 9	3.78	Si
fin.	2	508	146.46	558.29	SLV 9	3.81	Si

Verifiche a taglio delle travi in muratura secondo §C8.7.1.3.1 in combinazioni sismiche

Sezione	γM	N	M	V	Vt	Vp	Vt fess. diag.	Vt,lim	Comb.	c.s.	Verifica
ini.	2	-542	-165.15	1417			714	282	SLV 6	0.2	No
fin.	2	-63	92.98	-62			588	224	SLV 6	3.64	Si
ini.	2	282	154.49	-746			570	169	SLV 8	0.23	No
fin.	2	-939	-237.47	-159			822	324	SLV 8	2.03	Si
ini.	2	-542	-165.15	1417			714	282	SLV 5	0.2	No
fin.	2	-63	92.98	-62			588	224	SLV 5	3.64	Si
ini.	2	282	154.49	-746			570	169	SLV 7	0.23	No
fin.	2	-939	-237.47	-159			822	324	SLV 7	2.03	Si
ini.	2	-416	-146.84	1238			680	268	SLV 9	0.22	No
fin.	2	508	146.46	-186			571	121	SLV 9	0.65	No
ini.	2	409	172.79	-925			570	143	SLV 11	0.15	No
fin.	2	-369	-184	-284			670	263	SLV 11	0.93	No
ini.	2	-416	-146.84	1238			680	268	SLV 10	0.22	No
fin.	2	508	146.46	-186			571	121	SLV 10	0.65	No
ini.	2	409	172.79	-925			570	143	SLV 12	0.15	No
fin.	2	-369	-184	-284			670	263	SLV 12	0.93	No
ini.	2	21	-13.62	273			570	211	SLV 13	0.77	No
fin.	2	867	93.19	-365			571	0	SLV 13	0	No
ini.	2	21	-13.62	273			570	211	SLV 14	0.77	No
fin.	2	867	93.19	-365			571	0	SLV 14	0	No

Tabella dei coefficienti di sicurezza minimi

Stato limite	Coeff.s.	Comb.	Verifica
PF_SLV	2.351	SLV 7	Si
V_SLV	0	SLV 13	No
PF_SLU	5.141	SLU 80	Si
V_SLU	0.372	SLU 71	No

Trave di accoppiamento 178

Verifiche condotte secondo D.M. 17-01-18 (N.T.C.)

Dati geometrici

X ini.	Y ini.	Z ini.inf.	Z ini.sup.	H ini.	X fin.	Y fin.	Z fin.inf.	Z fin.sup	H fin.	Luce	Spessore	R. Trazione
-7.723	-3.499	13.42	14.558	1.138	-7.723	-4.589	13.42	14.011	0.591	1.09	0.3	30000

Caratteristiche del materiale

(Circolare 7 21-01-19 C8.5.I) Muratura in mattoni pieni e malta di calce LC2_Corti

fb_	fhk	fvk0	fhmedio	τ0	fv0	μ	ϕ	fvk,lim	E	G	FC
120000			172500	9000	20000	0.577	0.767	6500	320000000	128000000	1.2

Verifiche a pressoflessione delle travi in muratura in combinazioni non sismiche

Sezione	γM	N	M	Mu	Comb.	c.s.	Verifica
ini.	3	-15	17.38	1972.77	SLU 71	113.54	Si
fin.	3	194	-45.51	531.15	SLU 71	11.67	Si
ini.	3	-14	15.09	1972.77	SLU 83	130.7	Si
fin.	3	179	-40.84	531.15	SLU 83	13.01	Si
ini.	3	-14	16.24	1972.77	SLU 56	121.47	Si
fin.	3	187	-43.43	531.15	SLU 56	12.23	Si
ini.	3	-14	16.49	1972.77	SLU 58	119.61	Si
fin.	3	190	-44.32	531.15	SLU 58	11.98	Si
ini.	3	-13	14.59	1972.77	SLU 66	135.19	Si
fin.	3	174	-40.55	531.15	SLU 66	13.1	Si
ini.	3	-14	16.32	1972.77	SLU 50	120.89	Si
fin.	3	188	-44.75	531.15	SLU 50	11.87	Si
ini.	3	-14	16.07	1972.77	SLU 48	122.79	Si
fin.	3	186	-43.86	531.15	SLU 48	12.11	Si
ini.	3	-15	17.3	1972.77	SLU 77	114.05	Si
fin.	3	193	-44.19	531.15	SLU 77	12.02	Si
ini.	3	-15	17.55	1972.77	SLU 79	112.41	Si
fin.	3	196	-45.08	531.15	SLU 79	11.78	Si
ini.	3	-15	17.12	1972.77	SLU 69	115.21	Si
fin.	3	192	-44.61	531.15	SLU 69	11.91	Si

Verifiche a taglio delle travi in muratura secondo §C8.7.1.3.1 in combinazioni non sismiche

Sezione	γM	N	M	V	Vt	Vp	Vt fess. diag.	Vt,lim	Comb.	c.s.	Verifica
ini.	3	-14	16.07	602			1321	498	SLU 48	0.83	No
fin.	3	186	-43.86	-345			455	142	SLU 48	0.41	No
ini.	3	-14	16.24	599			1321	498	SLU 56	0.83	No
fin.	3	187	-43.43	-343			455	142	SLU 56	0.41	No
ini.	3	-14	15.09	568			1321	498	SLU 83	0.88	No
fin.	3	179	-40.84	-328			455	143	SLU 83	0.44	No
ini.	3	-15	17.3	611			1322	498	SLU 77	0.82	No
fin.	3	193	-44.19	-348			455	140	SLU 77	0.4	No
ini.	3	-15	17.12	614			1321	498	SLU 69	0.81	No
fin.	3	192	-44.61	-350			455	141	SLU 69	0.4	No
ini.	3	-13	14.59	562			1321	498	SLU 66	0.89	No
fin.	3	174	-40.55	-326			455	144	SLU 66	0.44	No
ini.	3	-15	17.38	624			1321	498	SLU 71	0.8	No
fin.	3	194	-45.51	-355			455	140	SLU 71	0.39	No
ini.	3	-14	16.32	612			1321	498	SLU 50	0.81	No
fin.	3	188	-44.75	-350			455	141	SLU 50	0.4	No
ini.	3	-14	16.49	609			1321	498	SLU 58	0.82	No
fin.	3	190	-44.32	-348			455	141	SLU 58	0.41	No
ini.	3	-15	17.55	621			1322	498	SLU 79	0.8	No
fin.	3	196	-45.08	-353			455	140	SLU 79	0.4	No

Verifiche a pressoflessione delle travi in muratura in combinazioni sismiche

Sezione	γM	N	M	Mu	Comb.	c.s.	Verifica
ini.	2	57	47.63	2959.16	SLV 13	62.13	Si
fin.	2	300	-109.81	796.72	SLV 13	7.26	Si
ini.	2	51	-13.38	2959.16	SLV 10	221.23	Si
fin.	2	155	-144.51	796.72	SLV 10	5.51	Si
ini.	2	19	-43.14	2959.16	SLV 5	68.59	Si
fin.	2	45	-113.83	796.72	SLV 5	7	Si
ini.	2	-36	61.72	2959.16	SLV 11	47.95	Si
fin.	2	199	56.91	796.72	SLV 11	14	Si
ini.	2	-67	31.95	2959.16	SLV 7	92.6	Si
fin.	2	88	87.58	796.72	SLV 7	9.1	Si
ini.	2	-67	31.95	2959.16	SLV 8	92.6	Si
fin.	2	88	87.58	796.72	SLV 8	9.1	Si
ini.	2	19	-43.14	2959.16	SLV 6	68.59	Si
fin.	2	45	-113.83	796.72	SLV 6	7	Si
ini.	2	-36	61.72	2959.16	SLV 12	47.95	Si
fin.	2	199	56.91	796.72	SLV 12	14	Si
ini.	2	51	-13.38	2959.16	SLV 9	221.23	Si
fin.	2	155	-144.51	796.72	SLV 9	5.51	Si
ini.	2	57	47.63	2959.16	SLV 14	62.13	Si
fin.	2	300	-109.81	796.72	SLV 14	7.26	Si

Verifiche a taglio delle travi in muratura secondo §C8.7.1.3.1 in combinazioni sismiche

Sezione	γM	N	M	V	Vt	Vp	Vt fess. diag.	Vt,lim	Comb.	c.s.	Verifica
ini.	2	-48	-51.58	516			1992	753	SLV 1	1.46	Si
fin.	2	-70	-7.54	-892			701	267	SLV 1	0.3	No
ini.	2	51	-13.38	1740			1973	731	SLV 9	0.42	No
fin.	2	155	-144.51	-812			683	233	SLV 9	0.29	No
ini.	2	31	70.16	279			1973	736	SLV 15	2.63	Si
fin.	2	313	-49.38	423			683	207	SLV 15	0.49	No
ini.	2	-48	-51.58	516			1992	753	SLV 2	1.46	Si
fin.	2	-70	-7.54	-892			701	267	SLV 2	0.3	No
ini.	2	-36	61.72	-788			1987	750	SLV 12	0.95	No
fin.	2	199	56.91	610			683	226	SLV 12	0.37	No
ini.	2	-36	61.72	-788			1987	750	SLV 11	0.95	No
fin.	2	199	56.91	610			683	226	SLV 11	0.37	No
ini.	2	51	-13.38	1740			1973	731	SLV 10	0.42	No
fin.	2	155	-144.51	-812			683	233	SLV 10	0.29	No
ini.	2	19	-43.14	1583			1973	738	SLV 6	0.47	No
fin.	2	45	-113.83	-1078			683	250	SLV 6	0.23	No
ini.	2	31	70.16	279			1973	736	SLV 16	2.63	Si
fin.	2	313	-49.38	423			683	207	SLV 16	0.49	No
ini.	2	19	-43.14	1583			1973	738	SLV 5	0.47	No
fin.	2	45	-113.83	-1078			683	250	SLV 5	0.23	No

Tabella dei coefficienti di sicurezza minimi

Stato limite	Coeff.s.	Comb.	Verifica
PF_SLV	5.513	SLV 9	Si
V_SLV	0.232	SLV 5	No
PF_SLU	11.672	SLU 71	Si
V_SLU	0.395	SLU 71	No

Trave di accoppiamento 179

Verifiche condotte secondo D.M. 17-01-18 (N.T.C.)

Dati geometrici

X ini.	Y ini.	Z ini.inf.	Z ini.sup.	H ini.	X fin.	Y fin.	Z fin.inf.	Z fin.sup	H fin.	Luce	Spessore	R. Trazione
-13.075	-4.784	2.5	2.71	0.21	-11.675	-4.784	2.5	2.71	0.21	1.4	0.3	30000

Caratteristiche del materiale

(Circolare 7 21-01-19 C8.5.I) Muratura in mattoni pieni e malta di calce LC2_Corti

fb_	fhk	fvk0	fhmedio	τ0	fv0	μ	ϕ	fvk,lim	E	G	FC
120000			172500	9000	20000	0.577	0.767	6500	320000000	128000000	1.2

Verifiche a pressoflessione delle travi in muratura in combinazioni non sismiche

Sezione	γM	N	M	Mu	Comb.	c.s.	Verifica
ini.	3	-96	-107.4	67.12	SLU 77	0.62	No
fin.	3	-722	-201.75	67.12	SLU 77	0.33	No
ini.	3	-87	-106.54	67.12	SLU 81	0.63	No
fin.	3	-755	-206.19	67.12	SLU 81	0.33	No
ini.	3	-139	-112.95	67.12	SLU 84	0.59	No
fin.	3	-788	-210.61	67.12	SLU 84	0.32	No
ini.	3	-139	-111.68	67.12	SLU 78	0.6	No
fin.	3	-757	-205.14	67.12	SLU 78	0.33	No
ini.	3	-142	-111.87	67.12	SLU 80	0.6	No
fin.	3	-752	-204.31	67.12	SLU 80	0.33	No
ini.	3	-155	-110.46	67.12	SLU 73	0.61	No
fin.	3	-779	-204.53	67.12	SLU 73	0.33	No
ini.	3	-95	-108.67	67.12	SLU 83	0.62	No
fin.	3	-753	-207.21	67.12	SLU 83	0.32	No
ini.	3	-131	-109.55	67.12	SLU 75	0.61	No
fin.	3	-759	-204.12	67.12	SLU 75	0.33	No
ini.	3	-131	-110.82	67.12	SLU 82	0.61	No
fin.	3	-790	-209.59	67.12	SLU 82	0.32	No
ini.	3	-163	-112.59	67.12	SLU 76	0.6	No
fin.	3	-777	-205.56	67.12	SLU 76	0.33	No

Verifiche a taglio delle travi in muratura secondo §C8.7.1.3.1 in combinazioni non sismiche

Sezione	γM	N	M	V	Vt	Vp	Vt fess. diag.	Vt,lim	Comb.	c.s.	Verifica
ini.	3	-131	-110.82	496			197	78	SLU 82	0.16	No
fin.	3	-790	-209.59	-863			372	133	SLU 82	0.15	No
ini.	3	-98	-107.59	483			188	74	SLU 79	0.15	No
fin.	3	-717	-200.91	-831			353	128	SLU 79	0.15	No
ini.	3	-139	-111.68	498			199	78	SLU 78	0.16	No
fin.	3	-757	-205.14	-847			364	131	SLU 78	0.15	No
ini.	3	-88	-105.26	474			185	72	SLU 74	0.15	No
fin.	3	-723	-200.73	-830			355	128	SLU 74	0.15	No
ini.	3	-83	-103.34	466			184	72	SLU 62	0.15	No
fin.	3	-692	-194.95	-807			346	126	SLU 62	0.16	No
ini.	3	-87	-106.54	480			185	72	SLU 81	0.15	No
fin.	3	-755	-206.19	-851			363	130	SLU 81	0.15	No
ini.	3	-142	-111.87	499			200	79	SLU 80	0.16	No
fin.	3	-752	-204.31	-843			362	130	SLU 80	0.15	No
ini.	3	-95	-108.67	488			187	73	SLU 83	0.15	No
fin.	3	-753	-207.21	-855			363	130	SLU 83	0.15	No
ini.	3	-139	-112.95	504			199	78	SLU 84	0.16	No
fin.	3	-788	-210.61	-868			372	133	SLU 84	0.15	No
ini.	3	-96	-107.4	483			187	73	SLU 77	0.15	No
fin.	3	-722	-201.75	-834			354	128	SLU 77	0.15	No

Verifiche a pressoflessione delle travi in muratura in combinazioni sismiche

Sezione	γM	N	M	Mu	Comb.	c.s.	Verifica
ini.	2	4059	547.3	100.68	SLV 15	0.18	No
fin.	2	-4851	-687.3	100.68	SLV 15	0.15	No
ini.	2	3533	474.68	100.68	SLV 14	0.21	No
fin.	2	-5388	-763.98	100.68	SLV 14	0.13	No
ini.	2	224	-20	100.68	SLV 10	5.03	Si
fin.	2	-2783	-444.92	100.68	SLV 10	0.23	No
ini.	2	-4169	-696.65	100.68	SLV 2	0.14	No
fin.	2	3846	403.25	100.68	SLV 2	0.25	No
ini.	2	224	-20	100.68	SLV 9	5.03	Si
fin.	2	-2783	-444.92	100.68	SLV 9	0.23	No
ini.	2	-3643	-624.04	100.68	SLV 4	0.16	No
fin.	2	4383	479.94	100.68	SLV 4	0.21	No
ini.	2	3533	474.68	100.68	SLV 13	0.21	No
fin.	2	-5388	-763.98	100.68	SLV 13	0.13	No
ini.	2	-4169	-696.65	100.68	SLV 1	0.14	No
fin.	2	3846	403.25	100.68	SLV 1	0.25	No
ini.	2	4059	547.3	100.68	SLV 16	0.18	No
fin.	2	-4851	-687.3	100.68	SLV 16	0.15	No
ini.	2	-3643	-624.04	100.68	SLV 3	0.16	No

Sezione	γM	N	M	Mu	Comb.	c.s.	Verifica
fin.	2	4383	479.94	100.68	SLV 3	0.21	No

Verifiche a taglio delle travi in muratura secondo §C8.7.1.3.1 in combinazioni sismiche

Sezione	γM	N	M	V	Vt	Vp	Vt fess. diag.	Vt,lim	Comb.	c.s.	Verifica
ini.	2	3533	474.68	-1711			243	0	SLV 13	0	No
fin.	2	-5388	-763.98	-2854			1679	389	SLV 13	0.14	No
ini.	2	-4169	-696.65	2656			1354	344	SLV 2	0.13	No
fin.	2	3846	403.25	1391			243	0	SLV 2	0	No
ini.	2	1977	222.05	-762			243	0	SLV 12	0	No
fin.	2	-992	-189.3	-753			507	186	SLV 12	0.25	No
ini.	2	-334	-129.35	548			332	131	SLV 8	0.24	No
fin.	2	1778	160.87	521			243	0	SLV 8	0	No
ini.	2	3533	474.68	-1711			243	0	SLV 14	0	No
fin.	2	-5388	-763.98	-2854			1679	389	SLV 14	0.14	No
ini.	2	-4169	-696.65	2656			1354	344	SLV 1	0.13	No
fin.	2	3846	403.25	1391			243	0	SLV 1	0	No
ini.	2	-3643	-624.04	2388			1214	324	SLV 4	0.14	No
fin.	2	4383	479.94	1675			243	0	SLV 4	0	No
ini.	2	-334	-129.35	548			332	131	SLV 7	0.24	No
fin.	2	1778	160.87	521			243	0	SLV 7	0	No
ini.	2	-3643	-624.04	2388			1214	324	SLV 3	0.14	No
fin.	2	4383	479.94	1675			243	0	SLV 3	0	No
ini.	2	1977	222.05	-762			243	0	SLV 11	0	No
fin.	2	-992	-189.3	-753			507	186	SLV 11	0.25	No

Tabella dei coefficienti di sicurezza minimi

Stato limite	Coeff.s.	Comb.	Verifica
PF_SLV	0.132	SLV 13	No
V_SLV	0	SLV 1	No
PF_SLU	0.319	SLU 84	No
V_SLU	0.15	SLU 83	No

Trave di accoppiamento 180

Verifiche condotte secondo D.M. 17-01-18 (N.T.C.)

Dati geometrici

X ini.	Y ini.	Z ini.inf.	Z ini.sup.	H ini.	X fin.	Y fin.	Z fin.inf.	Z fin.sup	H fin.	Luce	Spessore	R. Trazione
-12.933	-4.784	2.71	3.66	0.95	-11.933	-4.784	2.71	3.66	0.95	1	0.3	30000

Caratteristiche del materiale

(Circolare 7 21-01-19 C8.5.I) Muratura in mattoni pieni e malta di calce LC2_Corti

fb_	fhk	fvk0	fhmedio	τ0	fv0	μ	ϕ	fvk,lim	E	G	FC
120000			172500	9000	20000	0.577	0.767	6500	320000000	128000000	1.2

Verifiche a pressoflessione delle travi in muratura in combinazioni non sismiche

Sezione	γM	N	M	Mu	Comb.	c.s.	Verifica
ini.	3	-1059	334.15	1373.66	SLU 75	4.11	Si
fin.	3	-432	-6.35	1373.66	SLU 75	216.28	Si
ini.	3	-1065	352.2	1373.66	SLU 83	3.9	Si
fin.	3	-407	-10.59	1373.66	SLU 83	129.72	Si
ini.	3	-1018	342.43	1373.66	SLU 74	4.01	Si
fin.	3	-382	-7.61	1373.66	SLU 74	180.62	Si
ini.	3	-1107	343.92	1373.66	SLU 84	3.99	Si
fin.	3	-458	-9.34	1373.66	SLU 84	147.14	Si
ini.	3	-1019	339.27	1373.66	SLU 77	4.05	Si
fin.	3	-393	-0.75	1373.66	SLU 77	1827.5	Si
ini.	3	-1015	335.68	1373.66	SLU 79	4.09	Si
fin.	3	-396	1.77	1373.66	SLU 79	775.86	Si
ini.	3	-1063	355.36	1373.66	SLU 81	3.87	Si
fin.	3	-396	-17.44	1373.66	SLU 81	78.75	Si
ini.	3	-1061	330.99	1373.66	SLU 78	4.15	Si
fin.	3	-443	0.5	1373.66	SLU 78	2733.73	Si
ini.	3	-1105	347.09	1373.66	SLU 82	3.96	Si
fin.	3	-446	-16.19	1373.66	SLU 82	84.85	Si
ini.	3	-968	332.68	1373.66	SLU 60	4.13	Si
fin.	3	-349	-8.5	1373.66	SLU 60	161.52	Si

Verifiche a taglio delle travi in muratura secondo §C8.7.1.3.1 in combinazioni non sismiche

Sezione	γM	N	M	V	Vt	Vp	Vt fess. diag.	Vt,lim	Comb.	c.s.	Verifica
ini.	3	-1105	347.09	-570			1463	577	SLU 82	1.01	Si
fin.	3	-446	-16.19	-562			1212	476	SLU 82	0.85	No
ini.	3	-1107	343.92	-562			1463	577	SLU 84	1.03	Si
fin.	3	-458	-9.34	-541			1217	478	SLU 84	0.88	No
ini.	3	-970	329.52	-502			1411	558	SLU 62	1.11	Si
fin.	3	-360	-1.65	-537			1180	461	SLU 62	0.86	No
ini.	3	-1010	324.4	-509			1426	564	SLU 61	1.11	Si
fin.	3	-399	-7.25	-529			1194	468	SLU 61	0.88	No
ini.	3	-1019	339.27	-541			1430	565	SLU 77	1.04	Si
fin.	3	-393	-0.75	-519			1192	467	SLU 77	0.9	No
ini.	3	-1065	352.2	-562			1447	571	SLU 83	1.02	Si
fin.	3	-407	-10.59	-569			1198	469	SLU 83	0.82	No
ini.	3	-968	332.68	-510			1410	558	SLU 60	1.09	Si
fin.	3	-349	-8.5	-558			1175	459	SLU 60	0.82	No
ini.	3	-1018	342.43	-549			1429	565	SLU 74	1.03	Si
fin.	3	-382	-7.61	-540			1188	465	SLU 74	0.86	No
ini.	3	-922	319.74	-488			1393	551	SLU 53	1.13	Si

Sezione	γM	N	M	V	Vt	Vp	Vt fess. diag.	Vt,lim	Comb.	c.s.	Verifica
fin.	3	-335	1.33	-508			1170	456	SLU 53	0.9	No
ini.	3	-1063	355.36	-571			1447	571	SLU 81	1	Si
fin.	3	-396	-17.44	-591			1193	467	SLU 81	0.79	No

Verifiche a pressoflessione delle travi in muratura in combinazioni sismiche

Sezione	γM	N	M	Mu	Comb.	c.s.	Verifica
ini.	2	-5311	3863.77	2060.49	SLV 14	0.53	No
fin.	2	3609	-3342.2	2060.49	SLV 14	0.62	No
ini.	2	-1328	1346.42	2060.49	SLV 11	1.53	Si
fin.	2	1946	-1027.67	2060.49	SLV 11	2	Si
ini.	2	3498	-3387.18	2060.49	SLV 1	0.61	No
fin.	2	-4684	3353.57	2060.49	SLV 1	0.61	No
ini.	2	-4896	3873.23	2060.49	SLV 15	0.53	No
fin.	2	4181	-3355.58	2060.49	SLV 15	0.61	No
ini.	2	3913	-3377.73	2060.49	SLV 3	0.61	No
fin.	2	-4112	3340.19	2060.49	SLV 3	0.62	No
ini.	2	3498	-3387.18	2060.49	SLV 2	0.61	No
fin.	2	-4684	3353.57	2060.49	SLV 2	0.61	No
ini.	2	3913	-3377.73	2060.49	SLV 4	0.61	No
fin.	2	-4112	3340.19	2060.49	SLV 4	0.62	No
ini.	2	-5311	3863.77	2060.49	SLV 13	0.53	No
fin.	2	3609	-3342.2	2060.49	SLV 13	0.62	No
ini.	2	-1328	1346.42	2060.49	SLV 12	1.53	Si
fin.	2	1946	-1027.67	2060.49	SLV 12	2	Si
ini.	2	-4896	3873.23	2060.49	SLV 16	0.53	No
fin.	2	4181	-3355.58	2060.49	SLV 16	0.61	No

Verifiche a taglio delle travi in muratura secondo §C8.7.1.3.1 in combinazioni sismiche

Sezione	γM	N	M	V	Vt	Vp	Vt fess. diag.	Vt,lim	Comb.	c.s.	Verifica
ini.	2	-1328	1346.42	-3060			2069	818	SLV 11	0.27	No
fin.	2	1946	-1027.67	-4004			1564	0	SLV 11	0	No
ini.	2	-5311	3863.77	-10500			3582	1280	SLV 13	0.12	No
fin.	2	3609	-3342.2	-10314			1564	0	SLV 13	0	No
ini.	2	-4896	3873.23	-10304			3424	1240	SLV 16	0.12	No
fin.	2	4181	-3355.58	-10669			1564	0	SLV 16	0	No
ini.	2	3913	-3377.73	9737			1564	0	SLV 3	0	No
fin.	2	-4112	3340.19	9559			3127	1160	SLV 3	0.12	No
ini.	2	3913	-3377.73	9737			1564	0	SLV 4	0	No
fin.	2	-4112	3340.19	9559			3127	1160	SLV 4	0.12	No
ini.	2	3498	-3387.18	9541			1564	0	SLV 2	0	No
fin.	2	-4684	3353.57	9914			3344	1219	SLV 2	0.12	No
ini.	2	-5311	3863.77	-10500			3582	1280	SLV 14	0.12	No
fin.	2	3609	-3342.2	-10314			1564	0	SLV 14	0	No
ini.	2	3498	-3387.18	9541			1564	0	SLV 1	0	No
fin.	2	-4684	3353.57	9914			3344	1219	SLV 1	0.12	No
ini.	2	-4896	3873.23	-10304			3424	1240	SLV 15	0.12	No
fin.	2	4181	-3355.58	-10669			1564	0	SLV 15	0	No
ini.	2	-1328	1346.42	-3060			2069	818	SLV 12	0.27	No
fin.	2	1946	-1027.67	-4004			1564	0	SLV 12	0	No

Tabella dei coefficienti di sicurezza minimi

Stato limite	Coeff.s.	Comb.	Verifica
PF_SLV	0.532	SLV 15	No
V_SLV	0	SLV 1	No
PF_SLU	3.866	SLU 81	Si
V_SLU	0.791	SLU 81	No

Trave di accoppiamento 181

Verifiche condotte secondo D.M. 17-01-18 (N.T.C.)

Dati geometrici

X ini.	Y ini.	Z ini.inf.	Z ini.sup.	H ini.	X fin.	Y fin.	Z fin.inf.	Z fin.sup	H fin.	Luce	Spessore	R. Trazione
-12.933	-4.784	5.66	6.11	0.45	-11.933	-4.784	5.66	6.11	0.45	1	0.3	30000

Caratteristiche del materiale

(Circolare 7 21-01-19 C8.5.I) Muratura in mattoni pieni e malta di calce LC2_Corti

fb_	fhk	fvk0	fhmedio	τ0	fv0	μ	ϕ	fvk,lim	E	G	FC
120000			172500	9000	20000	0.577	0.767	6500	320000000	128000000	1.2

Verifiche a pressoflessione delle travi in muratura in combinazioni non sismiche

Sezione	γM	N	M	Mu	Comb.	c.s.	Verifica
ini.	3	474	-36.71	308.22	SLU 84	8.4	Si
fin.	3	-120	-216.19	308.22	SLU 84	1.43	Si
ini.	3	455	-36.98	308.22	SLU 75	8.34	Si
fin.	3	-117	-209.63	308.22	SLU 75	1.47	Si
ini.	3	495	-31.84	308.22	SLU 81	9.68	Si
fin.	3	-115	-215.86	308.22	SLU 81	1.43	Si
ini.	3	450	-40.18	308.22	SLU 78	7.67	Si
fin.	3	-110	-209.86	308.22	SLU 78	1.47	Si
ini.	3	479	-33.51	308.22	SLU 82	9.2	Si
fin.	3	-126	-215.96	308.22	SLU 82	1.43	Si
ini.	3	467	-38.51	308.22	SLU 77	8	Si
fin.	3	-99	-209.75	308.22	SLU 77	1.47	Si
ini.	3	463	-39.35	308.22	SLU 79	7.83	Si
fin.	3	-96	-208.37	308.22	SLU 79	1.48	Si
ini.	3	491	-35.04	308.22	SLU 83	8.8	Si

Sezione	γM	N	M	Mu	Comb.	c.s.	Verifica
fin.	3	-109	-216.09	308.22	SLU 83	1.43	Si
ini.	3	471	-35.3	308.22	SLU 74	8.73	Si
fin.	3	-106	-209.52	308.22	SLU 74	1.47	Si
ini.	3	446	-41.02	308.22	SLU 80	7.51	Si
fin.	3	-107	-208.47	308.22	SLU 80	1.48	Si

Verifiche a taglio delle travi in muratura secondo §C8.7.1.3.1 in combinazioni non sismiche

Sezione	γM	N	M	V	Vt	Vp	Vt fess. diag.	Vt,lim	Comb.	c.s.	Verifica
ini.	3	495	-31.84	570			347	0	SLU 81	0	No
fin.	3	-115	-215.86	-1264			377	146	SLU 81	0.12	No
ini.	3	463	-39.35	595			347	0	SLU 79	0	No
fin.	3	-96	-208.37	-1233			372	144	SLU 79	0.12	No
ini.	3	474	-36.71	594			347	0	SLU 84	0	No
fin.	3	-120	-216.19	-1271			379	147	SLU 84	0.12	No
ini.	3	451	-34.12	556			347	0	SLU 60	0	No
fin.	3	-107	-202.63	-1191			375	145	SLU 60	0.12	No
ini.	3	467	-38.51	592			347	0	SLU 77	0	No
fin.	3	-99	-209.75	-1239			373	144	SLU 77	0.12	No
ini.	3	471	-35.3	575			347	0	SLU 74	0	No
fin.	3	-106	-209.52	-1233			375	145	SLU 74	0.12	No
ini.	3	479	-33.51	577			347	0	SLU 82	0	No
fin.	3	-126	-215.96	-1265			380	148	SLU 82	0.12	No
ini.	3	450	-40.18	600			347	0	SLU 78	0	No
fin.	3	-110	-209.86	-1240			376	146	SLU 78	0.12	No
ini.	3	491	-35.04	587			347	0	SLU 83	0	No
fin.	3	-109	-216.09	-1270			376	145	SLU 83	0.11	No
ini.	3	455	-36.98	583			347	0	SLU 75	0	No
fin.	3	-117	-209.63	-1234			378	146	SLU 75	0.12	No

Verifiche a pressoflessione delle travi in muratura in combinazioni sismiche

Sezione	γM	N	M	Mu	Comb.	c.s.	Verifica
ini.	2	1869	307.41	462.33	SLV 9	1.5	Si
fin.	2	-1117	-564.91	462.33	SLV 9	0.82	No
ini.	2	-3137	-1044.04	462.33	SLV 1	0.44	No
fin.	2	3448	862.84	462.33	SLV 1	0.54	No
ini.	2	-3414	-1060.22	462.33	SLV 4	0.44	No
fin.	2	3441	925.37	462.33	SLV 4	0.5	No
ini.	2	-3414	-1060.22	462.33	SLV 3	0.44	No
fin.	2	3441	925.37	462.33	SLV 3	0.5	No
ini.	2	4067	1006.06	462.33	SLV 14	0.46	No
fin.	2	-3588	-1221.47	462.33	SLV 14	0.38	No
ini.	2	3790	989.87	462.33	SLV 16	0.47	No
fin.	2	-3595	-1158.95	462.33	SLV 16	0.4	No
ini.	2	3790	989.87	462.33	SLV 15	0.47	No
fin.	2	-3595	-1158.95	462.33	SLV 15	0.4	No
ini.	2	4067	1006.06	462.33	SLV 13	0.46	No
fin.	2	-3588	-1221.47	462.33	SLV 13	0.38	No
ini.	2	-3137	-1044.04	462.33	SLV 2	0.44	No
fin.	2	3448	862.84	462.33	SLV 2	0.54	No
ini.	2	1869	307.41	462.33	SLV 10	1.5	Si
fin.	2	-1117	-564.91	462.33	SLV 10	0.82	No

Verifiche a taglio delle travi in muratura secondo §C8.7.1.3.1 in combinazioni sismiche

Sezione	γM	N	M	V	Vt	Vp	Vt fess. diag.	Vt,lim	Comb.	c.s.	Verifica
ini.	2	-3414	-1060.22	4204			1430	482	SLV 4	0.11	No
fin.	2	3441	925.37	3158			520	0	SLV 4	0	No
ini.	2	1869	307.41	-428			520	0	SLV 9	0	No
fin.	2	-1117	-564.91	-2434			818	319	SLV 9	0.13	No
ini.	2	-292	-307.62	1902			598	234	SLV 6	0.12	No
fin.	2	993	60.38	-85			520	0	SLV 6	0	No
ini.	2	1869	307.41	-428			520	0	SLV 10	0	No
fin.	2	-1117	-564.91	-2434			818	319	SLV 10	0.13	No
ini.	2	-292	-307.62	1902			598	234	SLV 5	0.12	No
fin.	2	993	60.38	-85			520	0	SLV 5	0	No
ini.	2	-1215	-361.57	1263			844	327	SLV 7	0.26	No
fin.	2	970	268.81	686			520	0	SLV 7	0	No
ini.	2	-1215	-361.57	1263			844	327	SLV 8	0.26	No
fin.	2	970	268.81	686			520	0	SLV 8	0	No
ini.	2	-3137	-1044.04	4396			1356	465	SLV 1	0.11	No
fin.	2	3448	862.84	2927			520	0	SLV 1	0	No
ini.	2	-3137	-1044.04	4396			1356	465	SLV 2	0.11	No
fin.	2	3448	862.84	2927			520	0	SLV 2	0	No
ini.	2	-3414	-1060.22	4204			1430	482	SLV 3	0.11	No
fin.	2	3441	925.37	3158			520	0	SLV 3	0	No

Tabella dei coefficienti di sicurezza minimi

Stato limite	Coeff.s.	Comb.	Verifica
PF_SLV	0.378	SLV 13	No
V_SLV	0	SLV 1	No
PF_SLU	1.426	SLU 84	Si
V_SLU	0	SLU 60	No

Trave di accoppiamento 182

Verifiche condotte secondo D.M. 17-01-18 (N.T.C.)

Dati geometrici

X ini.	Y ini.	Z ini.inf.	Z ini.sup.	H ini.	X fin.	Y fin.	Z fin.inf.	Z fin.sup	H fin.	Luce	Spessore	R. Trazione
-12.933	-4.784	6.11	7.06	0.95	-11.933	-4.784	6.11	7.06	0.95	1	0.3	30000

Caratteristiche del materiale

(Circolare 7 21-01-19 C8.5.I) Muratura in mattoni pieni e malta di calce LC2_Corti

fb_	fhk	fvk0	fhmedio	τ0	fv0	μ	ϕ	fvk,lim	E	G	FC
120000			172500	9000	20000	0.577	0.767	6500	320000000	128000000	1.2

Verifiche a pressoflessione delle travi in muratura in combinazioni non sismiche

Sezione	γM	N	M	Mu	Comb.	c.s.	Verifica
ini.	3	-576	195.2	1373.66	SLU 84	7.04	Si
fin.	3	18	-211.27	1373.66	SLU 84	6.5	Si
ini.	3	-516	180.8	1373.66	SLU 79	7.6	Si
fin.	3	43	-201.77	1373.66	SLU 79	6.81	Si
ini.	3	-505	181.16	1373.66	SLU 60	7.58	Si
fin.	3	54	-203.91	1373.66	SLU 60	6.74	Si
ini.	3	-550	200.99	1373.66	SLU 81	6.83	Si
fin.	3	60	-220.52	1373.66	SLU 81	6.23	Si
ini.	3	-547	196.6	1373.66	SLU 83	6.99	Si
fin.	3	53	-216.25	1373.66	SLU 83	6.35	Si
ini.	3	-580	199.59	1373.66	SLU 82	6.88	Si
fin.	3	25	-215.54	1373.66	SLU 82	6.37	Si
ini.	3	-573	187.25	1373.66	SLU 73	7.34	Si
fin.	3	-3	-202.01	1373.66	SLU 73	6.8	Si
ini.	3	-524	188.04	1373.66	SLU 74	7.31	Si
fin.	3	54	-208.88	1373.66	SLU 74	6.58	Si
ini.	3	-553	186.65	1373.66	SLU 75	7.36	Si
fin.	3	18	-203.9	1373.66	SLU 75	6.74	Si
ini.	3	-520	183.65	1373.66	SLU 77	7.48	Si
fin.	3	46	-204.62	1373.66	SLU 77	6.71	Si

Verifiche a taglio delle travi in muratura secondo §C8.7.1.3.1 in combinazioni non sismiche

Sezione	γM	N	M	V	Vt	Vp	Vt fess. diag.	Vt,lim	Comb.	c.s.	Verifica
ini.	3	-516	180.8	-921			1239	487	SLU 79	0.53	No
fin.	3	43	-201.77	-346			1043	383	SLU 79	1.11	Si
ini.	3	-546	179.4	-916			1250	492	SLU 80	0.54	No
fin.	3	7	-196.79	-333			1043	391	SLU 80	1.17	Si
ini.	3	-524	188.04	-934			1242	489	SLU 74	0.52	No
fin.	3	54	-208.88	-379			1043	381	SLU 74	1.01	Si
ini.	3	-547	196.6	-965			1250	493	SLU 83	0.51	No
fin.	3	53	-216.25	-400			1043	381	SLU 83	0.95	No
ini.	3	-576	195.2	-960			1262	497	SLU 84	0.52	No
fin.	3	18	-211.27	-386			1043	389	SLU 84	1.01	Si
ini.	3	-520	183.65	-932			1240	488	SLU 77	0.52	No
fin.	3	46	-204.62	-354			1043	383	SLU 77	1.08	Si
ini.	3	-553	186.65	-929			1253	494	SLU 75	0.53	No
fin.	3	18	-203.9	-365			1043	389	SLU 75	1.06	Si
ini.	3	-550	182.26	-927			1252	493	SLU 78	0.53	No
fin.	3	11	-199.64	-340			1043	390	SLU 78	1.15	Si
ini.	3	-580	199.59	-962			1263	498	SLU 82	0.52	No
fin.	3	25	-215.54	-411			1043	387	SLU 82	0.94	No
ini.	3	-550	200.99	-967			1252	493	SLU 81	0.51	No
fin.	3	60	-220.52	-425			1043	380	SLU 81	0.89	No

Verifiche a pressoflessione delle travi in muratura in combinazioni sismiche

Sezione	γM	N	M	Mu	Comb.	c.s.	Verifica
ini.	2	-3531	2478.69	2060.49	SLV 16	0.83	No
fin.	2	3505	-2552.59	2060.49	SLV 16	0.81	No
ini.	2	-1305	1080.8	2060.49	SLV 9	1.91	Si
fin.	2	1124	-1054.18	2060.49	SLV 9	1.95	Si
ini.	2	-3526	2614.75	2060.49	SLV 14	0.79	No
fin.	2	3530	-2654.85	2060.49	SLV 14	0.78	No
ini.	2	2806	-2221.51	2060.49	SLV 2	0.93	No
fin.	2	-3428	2259.39	2060.49	SLV 2	0.91	No
ini.	2	-3526	2614.75	2060.49	SLV 13	0.79	No
fin.	2	3530	-2654.85	2060.49	SLV 13	0.78	No
ini.	2	2802	-2357.57	2060.49	SLV 4	0.87	No
fin.	2	-3454	2361.65	2060.49	SLV 4	0.87	No
ini.	2	2802	-2357.57	2060.49	SLV 3	0.87	No
fin.	2	-3454	2361.65	2060.49	SLV 3	0.87	No
ini.	2	-3531	2478.69	2060.49	SLV 15	0.83	No
fin.	2	3505	-2552.59	2060.49	SLV 15	0.81	No
ini.	2	-1305	1080.8	2060.49	SLV 10	1.91	Si
fin.	2	1124	-1054.18	2060.49	SLV 10	1.95	Si
ini.	2	2806	-2221.51	2060.49	SLV 1	0.93	No
fin.	2	-3428	2259.39	2060.49	SLV 1	0.91	No

Verifiche a taglio delle travi in muratura secondo §C8.7.1.3.1 in combinazioni sismiche

Sezione	γM	N	M	V	Vt	Vp	Vt fess. diag.	Vt,lim	Comb.	c.s.	Verifica
ini.	2	-3531	2478.69	-8239			2906	1098	SLV 16	0.13	No
fin.	2	3505	-2552.59	-7998			1564	0	SLV 16	0	No
ini.	2	-3531	2478.69	-8239			2906	1098	SLV 15	0.13	No
fin.	2	3505	-2552.59	-7998			1564	0	SLV 15	0	No
ini.	2	-1319	627.26	-2522			2065	817	SLV 12	0.32	No
fin.	2	1040	-713.29	-2870			1564	306	SLV 12	0.11	No
ini.	2	2802	-2357.57	7212			1564	0	SLV 4	0	No
fin.	2	-3454	2361.65	7278			2876	1089	SLV 4	0.15	No
ini.	2	2806	-2221.51	6947			1564	0	SLV 2	0	No
fin.	2	-3428	2259.39	7465			2867	1086	SLV 2	0.15	No

Sezione	γM	N	M	V	Vt	Vp	Vt fess. diag.	Vt,lim	Comb.	c.s.	Verifica
ini.	2	-3526	2614.75	-8504			2904	1097	SLV 13	0.13	No
fin.	2	3530	-2654.85	-7810			1564	0	SLV 13	0	No
ini.	2	-3526	2614.75	-8504			2904	1097	SLV 14	0.13	No
fin.	2	3530	-2654.85	-7810			1564	0	SLV 14	0	No
ini.	2	-1319	627.26	-2522			2065	817	SLV 11	0.32	No
fin.	2	1040	-713.29	-2870			1564	306	SLV 11	0.11	No
ini.	2	2802	-2357.57	7212			1564	0	SLV 3	0	No
fin.	2	-3454	2361.65	7278			2876	1089	SLV 3	0.15	No
ini.	2	2806	-2221.51	6947			1564	0	SLV 1	0	No
fin.	2	-3428	2259.39	7465			2867	1086	SLV 1	0.15	No

Tabella dei coefficienti di sicurezza minimi

Stato limite	Coeff.s.	Comb.	Verifica
PF_SLV	0.776	SLV 13	No
V_SLV	0	SLV 1	No
PF_SLU	6.229	SLU 81	Si
V_SLU	0.51	SLU 81	No

Trave di accoppiamento 183

Verifiche condotte secondo D.M. 17-01-18 (N.T.C.)

Dati geometrici

X ini.	Y ini.	Z ini.inf.	Z ini.sup.	H ini.	X fin.	Y fin.	Z fin.inf.	Z fin.sup	H fin.	Luce	Spessore	R. Trazione
-12.933	-4.784	9.06	9.59	0.53	-11.933	-4.784	9.06	9.59	0.53	1	0.3	30000

Caratteristiche del materiale

(Circolare 7 21-01-19 C8.5.I) Muratura in mattoni pieni e malta di calce LC2_Corti

fb_	fhk	fvk0	fhmedio	τ0	fv0	μ	ϕ	fvk,lim	E	G	FC
120000			172500	9000	20000	0.577	0.767	6500	320000000	128000000	1.2

Verifiche a pressoflessione delle travi in muratura in combinazioni non sismiche

Sezione	γM	N	M	Mu	Comb.	c.s.	Verifica
ini.	3	434	7.13	427.55	SLU 80	59.93	Si
fin.	3	-95	-169.12	427.55	SLU 80	2.53	Si
ini.	3	501	20.79	427.55	SLU 81	20.56	Si
fin.	3	-87	-174.78	427.55	SLU 81	2.45	Si
ini.	3	496	17	427.55	SLU 83	25.15	Si
fin.	3	-82	-175.22	427.55	SLU 83	2.44	Si
ini.	3	438	8.13	427.55	SLU 78	52.56	Si
fin.	3	-98	-170.44	427.55	SLU 78	2.51	Si
ini.	3	443	11.93	427.55	SLU 75	35.85	Si
fin.	3	-103	-170	427.55	SLU 75	2.51	Si
ini.	3	467	9.74	427.55	SLU 79	43.91	Si
fin.	3	-71	-169.37	427.55	SLU 79	2.52	Si
ini.	3	476	14.53	427.55	SLU 74	29.43	Si
fin.	3	-80	-170.26	427.55	SLU 74	2.51	Si
ini.	3	468	18.19	427.55	SLU 82	23.5	Si
fin.	3	-111	-174.52	427.55	SLU 82	2.45	Si
ini.	3	463	14.4	427.55	SLU 84	29.7	Si
fin.	3	-105	-174.96	427.55	SLU 84	2.44	Si
ini.	3	471	10.74	427.55	SLU 77	39.82	Si
fin.	3	-74	-170.7	427.55	SLU 77	2.5	Si

Verifiche a taglio delle travi in muratura secondo §C8.7.1.3.1 in combinazioni non sismiche

Sezione	γM	N	M	V	Vt	Vp	Vt fess. diag.	Vt,lim	Comb.	c.s.	Verifica
ini.	3	476	14.53	379			408	49	SLU 74	0.13	No
fin.	3	-80	-170.26	-1096			429	165	SLU 74	0.15	No
ini.	3	471	10.74	403			408	51	SLU 77	0.13	No
fin.	3	-74	-170.7	-1107			428	164	SLU 77	0.15	No
ini.	3	468	18.19	370			408	53	SLU 82	0.14	No
fin.	3	-111	-174.52	-1117			438	169	SLU 82	0.15	No
ini.	3	501	20.79	358			408	36	SLU 81	0.1	No
fin.	3	-87	-174.78	-1117			432	166	SLU 81	0.15	No
ini.	3	467	9.74	406			408	53	SLU 79	0.13	No
fin.	3	-71	-169.37	-1101			427	164	SLU 79	0.15	No
ini.	3	434	7.13	418			408	65	SLU 80	0.16	No
fin.	3	-95	-169.12	-1101			434	167	SLU 80	0.15	No
ini.	3	438	8.13	414			408	64	SLU 78	0.15	No
fin.	3	-98	-170.44	-1106			434	167	SLU 78	0.15	No
ini.	3	443	11.93	391			408	62	SLU 75	0.16	No
fin.	3	-103	-170	-1096			436	168	SLU 75	0.15	No
ini.	3	463	14.4	393			408	54	SLU 84	0.14	No
fin.	3	-105	-174.96	-1127			436	168	SLU 84	0.15	No
ini.	3	496	17	382			408	39	SLU 83	0.1	No
fin.	3	-82	-175.22	-1128			430	165	SLU 83	0.15	No

Verifiche a pressoflessione delle travi in muratura in combinazioni sismiche

Sezione	γM	N	M	Mu	Comb.	c.s.	Verifica
ini.	2	2114	664.14	641.32	SLV 15	0.97	No
fin.	2	-2050	-770.61	641.32	SLV 15	0.83	No
ini.	2	-1458	-647.95	641.32	SLV 2	0.99	No
fin.	2	1936	530.3	641.32	SLV 2	1.21	Si
ini.	2	2470	728.7	641.32	SLV 14	0.88	No
fin.	2	-2223	-862.57	641.32	SLV 14	0.74	No
ini.	2	2114	664.14	641.32	SLV 16	0.97	No
fin.	2	-2050	-770.61	641.32	SLV 16	0.83	No

Sezione	γM	N	M	Mu	Comb.	c.s.	Verifica
ini.	2	1511	322.19	641.32	SLV 9	1.99	Si
fin.	2	-968	-482.34	641.32	SLV 9	1.33	Si
ini.	2	-1814	-712.51	641.32	SLV 4	0.9	No
fin.	2	2108	622.25	641.32	SLV 4	1.03	Si
ini.	2	-1458	-647.95	641.32	SLV 1	0.99	No
fin.	2	1936	530.3	641.32	SLV 1	1.21	Si
ini.	2	1511	322.19	641.32	SLV 10	1.99	Si
fin.	2	-968	-482.34	641.32	SLV 10	1.33	Si
ini.	2	2470	728.7	641.32	SLV 13	0.88	No
fin.	2	-2223	-862.57	641.32	SLV 13	0.74	No
ini.	2	-1814	-712.51	641.32	SLV 3	0.9	No
fin.	2	2108	622.25	641.32	SLV 3	1.03	Si

Verifiche a taglio delle travi in muratura secondo §C8.7.1.3.1 in combinazioni sismiche

Sezione	γM	N	M	V	Vt	Vp	Vt fess. diag.	Vt,lim	Comb.	c.s.	Verifica
ini.	2	-854	-306	1654			840	332	SLV 8	0.2	No
fin.	2	854	242.03	569			612	0	SLV 8	0	No
ini.	2	1511	322.19	-1097			612	0	SLV 9	0	No
fin.	2	-968	-482.34	-2121			871	343	SLV 9	0.16	No
ini.	2	1511	322.19	-1097			612	0	SLV 10	0	No
fin.	2	-968	-482.34	-2121			871	343	SLV 10	0.16	No
ini.	2	2470	728.7	-2475			612	0	SLV 14	0	No
fin.	2	-2223	-862.57	-3607			1205	449	SLV 14	0.12	No
ini.	2	-1458	-647.95	2670			1001	388	SLV 2	0.15	No
fin.	2	1936	530.3	1728			612	0	SLV 2	0	No
ini.	2	-1814	-712.51	3032			1096	417	SLV 3	0.14	No
fin.	2	2108	622.25	2055			612	0	SLV 3	0	No
ini.	2	-1458	-647.95	2670			1001	388	SLV 1	0.15	No
fin.	2	1936	530.3	1728			612	0	SLV 1	0	No
ini.	2	-854	-306	1654			840	332	SLV 7	0.2	No
fin.	2	854	242.03	569			612	0	SLV 7	0	No
ini.	2	2470	728.7	-2475			612	0	SLV 13	0	No
fin.	2	-2223	-862.57	-3607			1205	449	SLV 13	0.12	No
ini.	2	-1814	-712.51	3032			1096	417	SLV 4	0.14	No
fin.	2	2108	622.25	2055			612	0	SLV 4	0	No

Tabella dei coefficienti di sicurezza minimi

Stato limite	Coeff.s.	Comb.	Verifica
PF_SLV	0.744	SLV 13	No
V_SLV	0	SLV 1	No
PF_SLU	2.44	SLU 83	Si
V_SLU	0.101	SLU 81	No

Trave di accoppiamento 184

Verifiche condotte secondo D.M. 17-01-18 (N.T.C.)

Dati geometrici

X ini.	Y ini.	Z ini.inf.	Z ini.sup.	H ini.	X fin.	Y fin.	Z fin.inf.	Z fin.sup	H fin.	Luce	Spessore	R. Trazione
-12.933	-4.784	9.59	10.54	0.95	-11.933	-4.784	9.59	10.54	0.95	1	0.3	30000

Caratteristiche del materiale

(Circolare 7 21-01-19 C8.5.I) Muratura in mattoni pieni e malta di calce LC2_Corti

fb_	fhk	fvk0	fhmedio	τ0	fv0	μ	ϕ	fvk,lim	E	G	FC
120000			172500	9000	20000	0.577	0.767	6500	320000000	128000000	1.2

Verifiche a pressoflessione delle travi in muratura in combinazioni non sismiche

Sezione	γM	N	M	Mu	Comb.	c.s.	Verifica
ini.	3	-885	231.3	1373.66	SLU 75	5.94	Si
fin.	3	-338	-125.9	1373.66	SLU 75	10.91	Si
ini.	3	-904	240.47	1373.66	SLU 82	5.71	Si
fin.	3	-324	-136.14	1373.66	SLU 82	10.09	Si
ini.	3	-929	231.22	1373.66	SLU 76	5.94	Si
fin.	3	-396	-117.15	1373.66	SLU 76	11.73	Si
ini.	3	-920	240.8	1373.66	SLU 84	5.7	Si
fin.	3	-352	-130.23	1373.66	SLU 84	10.55	Si
ini.	3	-839	229.66	1373.66	SLU 77	5.98	Si
fin.	3	-294	-128.63	1373.66	SLU 77	10.68	Si
ini.	3	-904	230.24	1373.66	SLU 80	5.97	Si
fin.	3	-375	-117	1373.66	SLU 80	11.74	Si
ini.	3	-902	231.62	1373.66	SLU 78	5.93	Si
fin.	3	-366	-119.98	1373.66	SLU 78	11.45	Si
ini.	3	-912	230.9	1373.66	SLU 73	5.95	Si
fin.	3	-369	-123.07	1373.66	SLU 73	11.16	Si
ini.	3	-858	238.84	1373.66	SLU 83	5.75	Si
fin.	3	-280	-138.87	1373.66	SLU 83	9.89	Si
ini.	3	-841	238.51	1373.66	SLU 81	5.76	Si
fin.	3	-252	-144.79	1373.66	SLU 81	9.49	Si

Verifiche a taglio delle travi in muratura secondo §C8.7.1.3.1 in combinazioni non sismiche

Sezione	γM	N	M	V	Vt	Vp	Vt fess. diag.	Vt,lim	Comb.	c.s.	Verifica
ini.	3	-822	229.34	-624			1355	536	SLU 74	0.86	No
fin.	3	-266	-134.54	-496			1144	444	SLU 74	0.89	No
ini.	3	-920	240.8	-640			1392	551	SLU 84	0.86	No
fin.	3	-352	-130.23	-507			1176	459	SLU 84	0.91	No
ini.	3	-904	240.47	-633			1386	548	SLU 82	0.87	No
fin.	3	-324	-136.14	-534			1166	454	SLU 82	0.85	No

Sezione	γM	N	M	V	Vt	Vp	Vt fess. diag.	Vt,lim	Comb.	c.s.	Verifica
ini.	3	-779	219.02	-571			1339	529	SLU 60	0.93	No
fin.	3	-242	-133.36	-512			1134	439	SLU 60	0.86	No
ini.	3	-841	238.51	-638			1362	539	SLU 81	0.84	No
fin.	3	-252	-144.79	-550			1139	441	SLU 81	0.8	No
ini.	3	-858	238.84	-644			1369	541	SLU 83	0.84	No
fin.	3	-280	-138.87	-523			1149	446	SLU 83	0.85	No
ini.	3	-902	231.62	-626			1385	548	SLU 78	0.88	No
fin.	3	-366	-119.98	-453			1182	462	SLU 78	1.02	Si
ini.	3	-841	228.28	-623			1362	539	SLU 79	0.87	No
fin.	3	-303	-125.65	-463			1158	451	SLU 79	0.97	No
ini.	3	-885	231.3	-619			1379	545	SLU 75	0.88	No
fin.	3	-338	-125.9	-480			1171	457	SLU 75	0.95	No
ini.	3	-839	229.66	-631			1361	538	SLU 77	0.85	No
fin.	3	-294	-128.63	-469			1154	449	SLU 77	0.96	No

Verifiche a pressoflessione delle travi in muratura in combinazioni sismiche

Sezione	γM	N	M	Mu	Comb.	c.s.	Verifica
ini.	2	1129	-690.46	2060.49	SLV 3	2.98	Si
fin.	2	-2556	873.08	2060.49	SLV 3	2.36	Si
ini.	2	1998	-752.47	2060.49	SLV 2	2.74	Si
fin.	2	-1442	680.32	2060.49	SLV 2	3.03	Si
ini.	2	-3139	1069.56	2060.49	SLV 16	1.93	Si
fin.	2	1072	-870.31	2060.49	SLV 16	2.37	Si
ini.	2	-2270	1007.55	2060.49	SLV 14	2.05	Si
fin.	2	2187	-1063.07	2060.49	SLV 14	1.94	Si
ini.	2	238	319.19	2060.49	SLV 9	6.46	Si
fin.	2	2217	-677.77	2060.49	SLV 9	3.04	Si
ini.	2	1129	-690.46	2060.49	SLV 4	2.98	Si
fin.	2	-2556	873.08	2060.49	SLV 4	2.36	Si
ini.	2	-3139	1069.56	2060.49	SLV 15	1.93	Si
fin.	2	1072	-870.31	2060.49	SLV 15	2.37	Si
ini.	2	-2270	1007.55	2060.49	SLV 13	2.05	Si
fin.	2	2187	-1063.07	2060.49	SLV 13	1.94	Si
ini.	2	238	319.19	2060.49	SLV 10	6.46	Si
fin.	2	2217	-677.77	2060.49	SLV 10	3.04	Si
ini.	2	1998	-752.47	2060.49	SLV 1	2.74	Si
fin.	2	-1442	680.32	2060.49	SLV 1	3.03	Si

Verifiche a taglio delle travi in muratura secondo §C8.7.1.3.1 in combinazioni sismiche

Sezione	γM	N	M	V	Vt	Vp	Vt fess. diag.	Vt,lim	Comb.	c.s.	Verifica
ini.	2	238	319.19	-1973			1564	537	SLV 9	0.27	No
fin.	2	2217	-677.77	-2222			1564	0	SLV 9	0	No
ini.	2	1998	-752.47	2804			1564	0	SLV 2	0	No
fin.	2	-1442	680.32	2455			2112	835	SLV 2	0.34	No
ini.	2	-2270	1007.55	-3968			2426	948	SLV 14	0.24	No
fin.	2	2187	-1063.07	-3725			1564	0	SLV 14	0	No
ini.	2	1998	-752.47	2804			1564	0	SLV 1	0	No
fin.	2	-1442	680.32	2455			2112	835	SLV 1	0.34	No
ini.	2	1519	-208.82	59			1564	0	SLV 5	0	No
fin.	2	1129	-154.75	-368			1564	268	SLV 5	0.73	No
ini.	2	-2270	1007.55	-3968			2426	948	SLV 13	0.24	No
fin.	2	2187	-1063.07	-3725			1564	0	SLV 13	0	No
ini.	2	1129	-690.46	3125			1564	268	SLV 3	0.09	No
fin.	2	-2556	873.08	3021			2535	984	SLV 3	0.33	No
ini.	2	1519	-208.82	59			1564	0	SLV 6	0	No
fin.	2	1129	-154.75	-368			1564	268	SLV 6	0.73	No
ini.	2	1129	-690.46	3125			1564	268	SLV 4	0.09	No
fin.	2	-2556	873.08	3021			2535	984	SLV 4	0.33	No
ini.	2	238	319.19	-1973			1564	537	SLV 10	0.27	No
fin.	2	2217	-677.77	-2222			1564	0	SLV 10	0	No

Tabella dei coefficienti di sicurezza minimi

Stato limite	Coeff.s.	Comb.	Verifica
PF_SLV	1.926	SLV 15	Si
V_SLV	0	SLV 1	No
PF_SLU	5.705	SLU 84	Si
V_SLU	0.803	SLU 81	No

Trave di accoppiamento 185

Verifiche condotte secondo D.M. 17-01-18 (N.T.C.)

Dati geometrici

X ini.	Y ini.	Z ini.inf.	Z ini.sup.	H ini.	X fin.	Y fin.	Z fin.inf.	Z fin.sup	H fin.	Luce	Spessore	R. Trazione
-12.933	-4.784	12.54	13.917	1.377	-11.933	-4.784	12.54	13.916	1.376	1	0.3	30000

Caratteristiche del materiale

(Circolare 7 21-01-19 C8.5.I) Muratura in mattoni pieni e malta di calce LC2_Corti

fb_	fhk	fvk0	fhmedio	τ0	fv0	μ	ϕ	fvk,lim	E	G	FC
120000			172500	9000	20000	0.577	0.767	6500	320000000	128000000	1.2

Verifiche a pressoflessione delle travi in muratura in combinazioni non sismiche

Sezione	γM	N	M	Mu	Comb.	c.s.	Verifica
ini.	3	-159	47.79	2885.92	SLU 57	60.38	Si
fin.	3	-439	-367.91	2882.52	SLU 57	7.83	Si
ini.	3	-166	40.26	2885.92	SLU 59	71.69	Si
fin.	3	-442	-369.46	2882.52	SLU 59	7.8	Si

Sezione	γM	N	M	Mu	Comb.	c.s.	Verifica
ini.	3	-130	70.78	2885.92	SLU 76	40.78	Si
fin.	3	-425	-372.99	2882.52	SLU 76	7.73	Si
ini.	3	-179	31.74	2885.92	SLU 70	90.92	Si
fin.	3	-448	-368.47	2882.52	SLU 70	7.82	Si
ini.	3	-137	66.94	2885.92	SLU 80	43.11	Si
fin.	3	-438	-381.8	2882.52	SLU 80	7.55	Si
ini.	3	-187	24.2	2885.92	SLU 72	119.24	Si
fin.	3	-452	-370.03	2882.52	SLU 72	7.79	Si
ini.	3	-94	93.54	2885.92	SLU 79	30.85	Si
fin.	3	-412	-371.24	2882.52	SLU 79	7.76	Si
ini.	3	-130	74.48	2885.92	SLU 78	38.75	Si
fin.	3	-435	-380.24	2882.52	SLU 78	7.58	Si
ini.	3	-86	101.08	2885.92	SLU 77	28.55	Si
fin.	3	-408	-369.69	2882.52	SLU 77	7.8	Si
ini.	3	-80	106.82	2885.92	SLU 84	27.02	Si
fin.	3	-402	-370.99	2882.52	SLU 84	7.77	Si

Verifiche a taglio delle travi in muratura secondo §C8.7.1.3.1 in combinazioni non sismiche

Sezione	γM	N	M	V	Vt	Vp	Vt fess. diag.	Vt,lim	Comb.	c.s.	Verifica
ini.	3	-1	154.98	26			1591	599	SLU 81	22.99	Si
fin.	3	-344	-344.58	-1434			1728	669	SLU 81	0.47	No
ini.	3	-94	93.54	136			1628	619	SLU 79	4.55	Si
fin.	3	-412	-371.24	-1456			1755	682	SLU 79	0.47	No
ini.	3	-94	96.04	111			1628	619	SLU 75	5.59	Si
fin.	3	-404	-364.39	-1404			1752	681	SLU 75	0.48	No
ini.	3	-51	122.64	84			1611	610	SLU 74	7.24	Si
fin.	3	-378	-353.83	-1431			1741	675	SLU 74	0.47	No
ini.	3	-80	106.82	91			1623	616	SLU 84	6.79	Si
fin.	3	-402	-370.99	-1435			1751	680	SLU 84	0.47	No
ini.	3	-86	101.08	122			1625	617	SLU 77	5.04	Si
fin.	3	-408	-369.69	-1459			1753	681	SLU 77	0.47	No
ini.	3	-44	128.39	52			1608	608	SLU 82	11.59	Si
fin.	3	-371	-355.14	-1407			1738	674	SLU 82	0.48	No
ini.	3	-130	74.48	149			1643	626	SLU 78	4.21	Si
fin.	3	-435	-380.24	-1432			1764	686	SLU 78	0.48	No
ini.	3	-137	66.94	162			1646	628	SLU 80	3.87	Si
fin.	3	-438	-381.8	-1429			1765	687	SLU 80	0.48	No
ini.	3	-37	133.42	64			1606	607	SLU 83	9.43	Si
fin.	3	-375	-360.44	-1462			1740	675	SLU 83	0.46	No

Verifiche a pressoflessione delle travi in muratura in combinazioni sismiche

Sezione	γM	N	M	Mu	Comb.	c.s.	Verifica
ini.	2	422	1446.56	4328.88	SLV 13	2.99	Si
fin.	2	-1524	-843.86	4323.78	SLV 13	5.12	Si
ini.	2	-441	-1441.6	4328.88	SLV 7	3	Si
fin.	2	1019	-32.87	4323.78	SLV 7	131.54	Si
ini.	2	347	1598.79	4328.88	SLV 9	2.71	Si
fin.	2	-1573	-472.69	4323.78	SLV 9	9.15	Si
ini.	2	115	997.53	4328.88	SLV 5	4.34	Si
fin.	2	-1006	-126.46	4323.78	SLV 5	34.19	Si
ini.	2	347	1598.79	4328.88	SLV 10	2.71	Si
fin.	2	-1573	-472.69	4323.78	SLV 10	9.15	Si
ini.	2	-441	-1441.6	4328.88	SLV 8	3	Si
fin.	2	1019	-32.87	4323.78	SLV 8	131.54	Si
ini.	2	-517	-1289.37	4328.88	SLV 3	3.36	Si
fin.	2	971	338.31	4323.78	SLV 3	12.78	Si
ini.	2	422	1446.56	4328.88	SLV 14	2.99	Si
fin.	2	-1524	-843.86	4323.78	SLV 14	5.12	Si
ini.	2	-517	-1289.37	4328.88	SLV 4	3.36	Si
fin.	2	971	338.31	4323.78	SLV 4	12.78	Si
ini.	2	115	997.53	4328.88	SLV 6	4.34	Si
fin.	2	-1006	-126.46	4323.78	SLV 6	34.19	Si

Verifiche a taglio delle travi in muratura secondo §C8.7.1.3.1 in combinazioni sismiche

Sezione	γM	N	M	V	Vt	Vp	Vt fess. diag.	Vt,lim	Comb.	c.s.	Verifica
ini.	2	255	714.82	-1763			2386	841	SLV 16	0.48	No
fin.	2	-916	-815.79	-2597			2751	1078	SLV 16	0.42	No
ini.	2	255	714.82	-1763			2386	841	SLV 15	0.48	No
fin.	2	-916	-815.79	-2597			2751	1078	SLV 15	0.42	No
ini.	2	347	1598.79	-2696			2386	819	SLV 9	0.3	No
fin.	2	-1573	-472.69	-3710			3014	1191	SLV 9	0.32	No
ini.	2	422	1446.56	-2991			2386	801	SLV 13	0.27	No
fin.	2	-1524	-843.86	-3816			2995	1183	SLV 13	0.31	No
ini.	2	422	1446.56	-2991			2386	801	SLV 14	0.27	No
fin.	2	-1524	-843.86	-3816			2995	1183	SLV 14	0.31	No
ini.	2	-441	-1441.6	2880			2563	989	SLV 8	0.34	No
fin.	2	1019	-32.87	1663			2385	639	SLV 8	0.38	No
ini.	2	-517	-1289.37	3176			2593	1004	SLV 4	0.32	No
fin.	2	971	338.31	1769			2385	653	SLV 4	0.37	No
ini.	2	347	1598.79	-2696			2386	819	SLV 10	0.3	No
fin.	2	-1573	-472.69	-3710			3014	1191	SLV 10	0.32	No
ini.	2	-517	-1289.37	3176			2593	1004	SLV 3	0.32	No
fin.	2	971	338.31	1769			2385	653	SLV 3	0.37	No
ini.	2	-441	-1441.6	2880			2563	989	SLV 7	0.34	No
fin.	2	1019	-32.87	1663			2385	639	SLV 7	0.38	No

Tabella dei coefficienti di sicurezza minimi

Stato limite	Coeff.s.	Comb.	Verifica
PF_SLV	2.708	SLV 9	Si
V_SLV	0.268	SLV 13	No

Stato limite	Coeff.s.	Comb.	Verifica
PF_SLU	7.55	SLU 80	Si
V_SLU	0.462	SLU 83	No